AUTHENTICATED
U.S. GOVERNMENT
INFORMATION
GPO

Title 40—Protection of Environment

(This book contains parts 81 to 84)

Part

CHAPTER I—Environmental Protection Agency (Continued) 81

CHAPTER I—ENVIRONMENTAL PROTECTION AGENCY (CONTINUED)

EDITORIAL NOTE: Nomenclature changes to chapter I appear at 65 FR 47324, 47325, Aug. 2, 2000; 66 FR 34375, 34376, June 28, 2001; and 69 FR 18803, Apr. 9, 2004.

SUBCHAPTER C—AIR PROGRAMS (CONTINUED)

Part		*Page*
81	Designation of areas for air quality planning purposes	5
82	Protection of stratospheric ozone	713
83–84	[Reserved]	

SUBCHAPTER C—AIR PROGRAMS (CONTINUED)

PART 81—DESIGNATION OF AREAS FOR AIR QUALITY PLANNING PURPOSES

Subpart A—Meaning of Terms

Sec.
81.1 Definitions.

Subpart B—Designation of Air Quality Control Regions

81.11 Scope.
81.12 National Capital Interstate Air Quality Control Region (District of Columbia, Maryland, and Virginia).
81.13 New Jersey-New York-Connecticut Interstate Air Quality Control Region.
81.14 Metropolitan Chicago Interstate Air Quality Control Region.
81.15 Metropolitan Philadelphia Interstate Air Quality Control Region (Pennsylvania-New Jersey-Delaware).
81.16 Metropolitan Denver Intrastate Air Quality Control Region.
81.17 Metropolitan Los Angeles Air Quality Control Region.
81.18 Metropolitan St. Louis Interstate Air Quality Control Region.
81.19 Metropolitan Boston Intrastate Air Quality Control Region.
81.20 Metropolitan Cincinnati Interstate Air Quality Control Region.
81.21 San Francisco Bay Area Intrastate Air Quality Control Region.
81.22 Greater Metropolitan Cleveland Intrastate Air Quality Control Region.
81.23 Southwest Pennsylvania Intrastate Air Quality Control Region.
81.24 Niagara Frontier Intrastate Air Quality Control Region.
81.25 Metropolitan Kansas City Interstate Air Quality Control Region.
81.26 Hartford-New Haven-Springfield Interstate Air Quality Control Region.
81.27 Minneapolis-St. Paul Intrastate Air Quality Control Region.
81.28 Metropolitan Baltimore Intrastate Air Quality Control Region.
81.29 Metropolitan Indianapolis Intrastate Air Quality Control Region.
81.30 Southeastern Wisconsin Intrastate Air Quality Control Region.
81.31 Metropolitan Providence Interstate Air Quality Control Region.
81.32 Puget Sound Intrastate Air Quality Control Region.
81.33 Steubenville-Weirton-Wheeling Interstate Air Quality Control Region.
81.34 Metropolitan Dayton Intrastate Air Quality Control Region.
81.35 Louisville Interstate Air Quality Control Region.
81.36 Maricopa Intrastate Air Quality Control Region.
81.37 Metropolitan Detroit-Port Huron Intrastate Air Quality Control Region.
81.38 Metropolitan Houston-Galveston Intrastate Air Quality Control Region.
81.39 Metropolitan Dallas-Fort Worth Intrastate Air Quality Control Region.
81.40 Metropolitan San Antonio Intrastate Air Quality Control Region.
81.41 Metropolitan Birmingham Intrastate Air Quality Control Region.
81.42 Chattanooga Interstate Air Quality Control Region.
81.43 Metropolitan Toledo Interstate Air Quality Control Region.
81.44 Metropolitan Memphis Interstate Air Quality Control Region.
81.45 Metropolitan Atlanta Intrastate Air Quality Control Region.
81.46 U.S. Virgin Islands Air Quality Control Region.
81.47 Central Oklahoma Intrastate Air Quality Control Region.
81.48 Champlain Valley Interstate Air Quality Control Region.
81.49 Southeast Florida Intrastate Air Quality Control Region.
81.50 Metropolitan Omaha-Council Bluffs Interstate Air Quality Control Region.
81.51 Portland Interstate Air Quality Control Region.
81.52 Wasatch Front Intrastate Air Quality Control Region.
81.53 Southern Louisiana-Southeast Texas Interstate Air Quality Control Region.
81.54 Cook Inlet Intrastate Air Quality Control Region.
81.55 Northeast Pennsylvania-Upper Delaware Valley Interstate Air Quality Control Region.
81.57 Eastern Tennessee-Southwestern Virginia Interstate Air Quality Control Region.
81.58 Columbus (Georgia)—Phenix City (Alabama) Interstate Air Quality Control Region.
81.59 Cumberland-Keyser Interstate Air Quality Control Region.
81.60 Duluth (Minnesota)—Superior (Wisconsin) Interstate Air Quality Control Region.
81.61 Evansville (Indiana)—Owensboro-Henderson (Kentucky) Interstate Air Quality Control Region.
81.62 Northeast Mississippi Intrastate Air Quality Control Region.
81.63 Metropolitan Fort Smith Interstate Air Quality Control Region.

81.64 Huntington (West Virginia)—Ashland (Kentucky)—Portsmouth-Ironton (Ohio) Interstate Air Quality Control Region.
81.65 Joplin (Missouri)—Northeast Oklahoma Interstate Air Quality Control Region.
81.66 Southeast Minnesota-La Crosse (Wisconsin) Interstate Air Quality Control Region.
81.67 Lake Michigan Intrastate Air Quality Control Region.
81.68 Mobile (Alabama)—Pensacola-Panama City (Florida)-Southern Mississippi Interstate Air Quality Control Region.
81.69 Paducah (Kentucky)—Cairo (Illinois) Interstate Air Quality Control Region.
81.70 Parkersburg (West Virginia)—Marietta (Ohio) Interstate Air Quality Control Region.
81.71 Rockford (Illinois)—Janesville-Beloit (Wisconsin) Interstate Air Quality Control Region.
81.72 Tennessee River Valley (Alabama)-Cumberland Mountains (Tennessee) Interstate Air Quality Control Region.
81.73 South Bend-Elkhart (Indiana)—Benton Harbor (Michigan) Interstate Air Quality Control Region.
81.74 Northwest Pennsylvania-Youngstown Interstate Air Quality Control Region.
81.75 Metropolitan Charlotte Interstate Air Quality Control Region.
81.76 State of Hawaii Air Quality Control Region.
81.77 Puerto Rico Air Quality Control Region.
81.78 Metropolitan Portland Intrastate Air Quality Control Region.
81.79 Northeastern Oklahoma Intrastate Air Quality Control Region.
81.80 Las Vegas Intrastate Air Quality Control Region.
81.81 Merrimack Valley-Southern New Hampshire Interstate Air Quality Control Region.
81.82 El Paso-Las Cruces-Alamogordo Interstate Air Quality Control Region.
81.83 Albuquerque-Mid Rio Grande Intrastate Air Quality Control Region.
81.84 Metropolitan Fargo-Moorhead Interstate Air Quality Control Region.
81.85 Metropolitan Sioux Falls Interstate Air Quality Control Region.
81.86 Metropolitan Sioux City Interstate Air Quality Control Region.
81.87 Metropolitan Boise Intrastate Air Quality Control Region.
81.88 Billings Intrastate Air Quality Control Region.
81.89 Metropolitan Cheyenne Intrastate Air Quality Control Region.
81.90 Androscoggin Valley Interstate Air Quality Control Region.
81.91 Jacksonville (Florida)—Brunswick (Georgia) Interstate Air Quality Control Region.
81.92 Monroe (Louisiana)—El Dorado (Arkansas) Interstate Air Quality Control Region.
81.93 Hampton Roads Intrastate Air Quality Control Region.
81.94 Shreveport-Texarkana-Tyler Interstate Air Quality Control Region.
81.95 Central Florida Intrastate Air Quality Control Region.
81.96 West Central Florida Intrastate Air Quality Control Region.
81.97 Southwest Florida Intrastate Air Quality Control Region.
81.98 Burlington-Keokuk Interstate Air Quality Control Region.
81.99 New Mexico Southern Border Intrastate Air Quality Control Region.
81.100 Eastern Washington-Northern Idaho Interstate Air Quality Control Region.
81.101 Metropolitan Dubuque Interstate Air Quality Control Region.
81.102 Metropolitan Quad Cities Interstate Air Quality Control Region.
81.104 Central Pennsylvania Intrastate Air Quality Control Region.
81.105 South Central Pennsylvania Intrastate Air Quality Control Region.
81.106 Greenville-Spartanburg Intrastate Air Quality Control Region.
81.107 Greenwood Intrastate Air Quality Control Region.
81.108 Columbia Intrastate Air Quality Control Region.
81.109 Florence Intrastate Air Quality Control Region.
81.110 Camden-Sumter Intrastate Air Quality Control Region.
81.111 Georgetown Intrastate Air Quality Control Region.
81.112 Charleston Intrastate Air Quality Control Region.
81.113 Savannah (Georgia)—Beaufort (South Carolina) Interstate Air Quality Control Region.
81.114 Augusta (Georgia)—Aiken (South Carolina) Interstate Air Quality Control Region.
81.115 Northwest Nevada Intrastate Air Quality Control Region.
81.116 Northern Missouri Intrastate Air Quality Control Region.
81.117 Southeast Missouri Intrastate Air Quality Control Region.
81.118 Southwest Missouri Intrastate Air Quality Control Region.
81.119 Western Tennessee Intrastate Air Quality Control Region.
81.120 Middle Tennessee Intrastate Air Quality Control Region.
81.121 Four Corners Interstate Air Quality Control Region.
81.122 Mississippi Delta Intrastate Air Quality Control Region.
81.123 Southeastern Oklahoma Intrastate Air Quality Control Region.
81.124 North Central Oklahoma Intrastate Air Quality Control Region.

81.125 Southwestern Oklahoma Intrastate Air Quality Control Region.
81.126 Northwestern Oklahoma Intrastate Air Quality Control Region.
81.127 Central New York Intrastate Air Quality Control Region.
81.128 Genesee-Finger Lakes Intrastate Air Quality Control Region.
81.129 Hudson Valley Intrastate Air Quality Control Region.
81.130 Southern Tier East Intrastate Air Quality Control Region.
81.131 Southern Tier West Intrastate Air Quality Control Region.
81.132 Abilene-Wichita Falls Intrastate Air Quality Control Region.
81.133 Amarillo-Lubbock Intrastate Air Quality Control Region.
81.134 Austin-Waco Intrastate Air Quality Control Region.
81.135 Brownsville-Laredo Intrastate Air Quality Control Region.
81.136 Corpus Christi-Victoria Intrastate Air Quality Control Region.
81.137 Midland-Odessa-San Angelo Intrastate Air Quality Control Region.
81.138 Central Arkansas Intrastate Air Quality Control Region.
81.139 Northeast Arkansas Intrastate Air Quality Control Region.
81.140 Northwest Arkansas Intrastate Air Quality Control Region.
81.141 Berkshire Intrastate Air Quality Control Region.
81.142 Central Massachusetts Intrastate Air Quality Control Region.
81.143 Central Virginia Intrastate Air Quality Control Region.
81.144 Northeastern Virginia Intrastate Air Quality Control Region.
81.145 State Capital Intrastate Air Quality Control Region.
81.146 Valley of Virginia Intrastate Air Quality Control Region.
81.147 Eastern Mountain Intrastate Air Quality Control Region.
81.148 Eastern Piedmont Intrastate Air Quality Control Region.
81.149 Northern Coastal Plain Intrastate Air Quality Control Region.
81.150 Northern Piedmont Intrastate Air Quality Control Region.
81.151 Sandhills Intrastate Air Quality Control Region.
81.152 Southern Coastal Plain Intrastate Air Quality Control Region.
81.153 Western Mountain Intrastate Air Quality Control Region.
81.154 Eastern Shore Intrastate Air Quality Control Region.
81.155 Central Maryland Intrastate Air Quality Control Region.
81.156 Southern Maryland Intrastate Air Quality Control Region.
81.157 North Central Wisconsin Intrastate Air Quality Control Region.
81.158 Southern Wisconsin Intrastate Air Quality Control Region.
81.159 Great Basin Valley Intrastate Air Quality Control Region.
81.160 North Central Coast Intrastate Air Quality Control Region.
81.161 North Coast Intrastate Air Quality Control Region.
81.162 Northeast Plateau Intrastate Air Quality Control Region.
81.163 Sacramento Valley Intrastate Air Quality Control Region.
81.164 San Diego Intrastate Air Quality Control Region.
81.165 San Joaquin Valley Intrastate Air Quality Control Region.
81.166 South Central Coast Intrastate Air Quality Control Region.
81.167 Southeast Desert Intrastate Air Quality Control Region.
81.168 Great Falls Intrastate Air Quality Control Region.
81.169 Helena Intrastate Air Quality Control Region.
81.170 Miles City Intrastate Air Quality Control Region.
81.171 Missoula Intrastate Air Quality Control Region.
81.172 Comanche Intrastate Air Quality Control Region.
81.173 Grand Mesa Intrastate Air Quality Control Region.
81.174 Pawnee Intrastate Air Quality Control Region.
81.175 San Isabel Intrastate Air Quality Control Region.
81.176 San Luis Intrastate Air Quality Control Region.
81.177 Yampa Intrastate Air Quality Control Region.
81.178 Southern Delaware Intrastate Air Quality Control Region.
81.179 Aroostook Intrastate Air Quality Control Region.
81.181 Down East Intrastate Air Quality Control Region.
81.182 Northwest Maine Intrastate Air Quality Control Region.
81.183 Eastern Connecticut Intrastate Air Quality Control Region.
81.184 Northwestern Connecticut Intrastate Air Quality Control Region.
81.185 Northern Washington Intrastate Air Quality Control Region.
81.187 Olympic-Northwest Washington Intrastate Air Quality Control Region.
81.189 South Central Washington Intrastate Air Quality Control Region.
81.190 Eastern Idaho Intrastate Air Quality Control Region.
81.191 Appalachian Intrastate Air Quality Control Region.
81.192 Bluegrass Intrastate Air Quality Control Region.
81.193 North Central Kentucky Intrastate Air Quality Control Region.

81.194 South Central Kentucky Intrastate Air Quality Control Region.
81.195 Central Michigan Intrastate Air Quality Control Region.
81.196 South Central Michigan Intrastate Air Quality Control Region.
81.197 Upper Michigan Intrastate Air Quality Control Region.
81.199 East Alabama Intrastate Air Quality Control Region.
81.200 Metropolitan Columbus Intrastate Air Quality Control Region.
81.201 Mansfield-Marion Intrastate Air Quality Control Region.
81.202 Northwest Ohio Intrastate Air Quality Control Region.
81.203 Sandusky Intrastate Air Quality Control Region.
81.204 Wilmington-Chillicothe-Logan Intrastate Air Quality Control Region.
81.205 Zanesville-Cambridge Intrastate Air Quality Control Region.
81.213 Casper Intrastate Air Quality Control Region.
81.214 Black Hills-Rapid City Intrastate Air Quality Control Region.
81.215 East Central Indiana Intrastate Air Quality Control Region.
81.216 Northeast Indiana Intrastate Air Quality Control Region.
81.217 Southern Indiana Intrastate Air Quality Control Region.
81.218 Wabash Valley Intrastate Air Quality Control Region.
81.219 Central Oregon Intrastate Air Quality Control Region.
81.220 Eastern Oregon Intrastate Air Quality Control Region.
81.221 Southwest Oregon Intrastate Air Quality Control Region.
81.226 Lincoln-Beatrice-Fairbury Intrastate Air Quality Control Region.
81.230 Allegheny Intrastate Air Quality Control Region.
81.231 Central West Virginia Intrastate Air Quality Control Region.
81.232 Eastern Panhandle Intrastate Air Quality Control Region.
81.233 Kanawha Valley Intrastate Air Quality Control Region.
81.234 North Central West Virginia Intrastate Air Quality Control Region.
81.235 Southern West Virginia Intrastate Air Quality Control Region.
81.236 Central Georgia Intrastate Air Quality Control Region.
81.237 Northeast Georgia Intrastate Air Quality Control Region.
81.238 Southwest Georgia Intrastate Air Quality Control Region.
81.239 Upper Rio Grande Valley Intrastate Air Quality Control Region.
81.240 Northeastern Plains Intrastate Air Quality Control Region.
81.241 Southwestern Mountains-Augustine Plains Intrastate Air Quality Control Region.
81.242 Pecos-Permian Basin Intrastate Air Quality Control Region.
81.243 Central Minnesota Intrastate Air Quality Control Region.
81.244 Northwest Minnesota Intrastate Air Quality Control Region.
81.245 Southwest Minnesota Intrastate Air Quality Control Region.
81.246 Northern Alaska Intrastate Air Quality Control Region.
81.247 South Central Alaska Intrastate Air Quality Control Region.
81.248 Southeastern Alaska Intrastate Air Quality Control Region.
81.249 Northwest Oregon Intrastate Air Quality Control Region.
81.250 North Central Kansas Intrastate Air Quality Control Region.
81.251 Northeast Kansas Intrastate Air Quality Control Region.
81.252 Northwest Kansas Intrastate Air Quality Control Region.
81.253 South Central Kansas Intrastate Air Quality Control Region.
81.254 Southeast Kansas Intrastate Air Quality Control Region.
81.255 Southwest Kansas Intrastate Air Quality Control Region.
81.256 Northeast Iowa Intrastate Air Quality Control Region.
81.257 North Central Iowa Intrastate Air Quality Control Region.
81.258 Northwest Iowa Intrastate Air Quality Control Region.
81.259 Southwest Iowa Intrastate Air Quality Control Region.
81.260 South Central Iowa Intrastate Air Quality Control Region.
81.261 Southeast Iowa Intrastate Air Quality Control Region.
81.262 North Central Illinois Intrastate Air Quality Control Region.
81.263 East Central Illinois Intrastate Air Quality Control Region.
81.264 West Central Illinois Intrastate Air Quality Control Region.
81.265 Southeast Illinois Intrastate Air Quality Control Region.
81.266 Alabama and Tombigbee Rivers Intrastate Air Quality Control Region
81.267 Southeast Alabama Intrastate Air Quality Control Region.
81.268 Mohave-Yuma Intrastate Air Quality Control Region.
81.269 Pima Intrastate Air Quality Control Region.
81.270 Northern Arizona Intrastate Air Quality Control Region.
81.271 Central Arizona Intrastate Air Quality Control Region.
81.272 Southeast Arizona Intrastate Air Quality Control Region.
81.273 Lake County Intrastate Air Quality Control Region.
81.274 Mountain Counties Intrastate Air Quality Control Region.

81.275 Lake Tahoe Intrastate Air Quality Control Region.

Subpart C—Section 107 Attainment Status Designations

81.300 Scope.
81.301 Alabama.
81.302 Alaska.
81.303 Arizona.
81.304 Arkansas.
81.305 California.
81.306 Colorado.
81.307 Connecticut.
81.308 Delaware.
81.309 District of Columbia.
81.310 Florida.
81.311 Georgia.
81.312 Hawaii.
81.313 Idaho.
81.314 Illinois.
81.315 Indiana.
81.316 Iowa.
81.317 Kansas.
81.318 Kentucky.
81.319 Louisiana.
81.320 Maine.
81.321 Maryland.
81.322 Massachusetts.
81.323 Michigan.
81.324 Minnesota.
81.325 Mississippi.
81.326 Missouri.
81.327 Montana.
81.328 Nebraska.
81.329 Nevada.
81.330 New Hampshire.
81.331 New Jersey.
81.332 New Mexico.
81.333 New York.
81.334 North Carolina.
81.335 North Dakota.
81.336 Ohio.
81.337 Oklahoma.
81.338 Oregon.
81.339 Pennsylvania.
81.340 Rhode Island.
81.341 South Carolina.
81.342 South Dakota.
81.343 Tennessee.
81.344 Texas.
81.345 Utah.
81.346 Vermont.
81.347 Virginia.
81.348 Washington.
81.349 West Virginia.
81.350 Wisconsin.
81.351 Wyoming.
81.352 American Samoa.
81.353 Guam.
81.354 Northern Mariana Islands.
81.355 Puerto Rico.
81.356 Virgin Islands.

Subpart D—Identification of Mandatory Class I Federal Areas Where Visibility is an Important Value

81.400 Scope.
81.401 Alabama.
81.402 Alaska.
81.403 Arizona.
81.404 Arkansas.
81.405 California.
81.406 Colorado.
81.407 Florida.
81.408 Georgia.
81.409 Hawaii.
81.410 Idaho.
81.411 Kentucky.
81.412 Louisiana.
81.413 Maine.
81.414 Michigan.
81.415 Minnesota.
81.416 Missouri.
81.417 Montana.
81.418 Nevada.
81.419 New Hampshire.
81.420 New Jersey.
81.421 New Mexico.
81.422 North Carolina.
81.423 North Dakota.
81.424 Oklahoma.
81.425 Oregon.
81.426 South Carolina.
81.427 South Dakota.
81.428 Tennessee.
81.429 Texas.
81.430 Utah.
81.431 Vermont.
81.432 Virgin Islands.
81.433 Virginia.
81.434 Washington.
81.435 West Virginia.
81.436 Wyoming.
81.437 New Brunswick, Canada.
APPENDIX A TO PART 81—AIR QUALITY CONTROL REGIONS (AQCR'S)

AUTHORITY: 42 U.S.C. 7401, *et seq.*

SOURCE: 36 FR 22421, Nov. 25, 1971, unless otherwise noted.

Subpart A—Meaning of Terms

§81.1 Definitions.

As used in this part, all terms not defined herein shall have the meaning given them by the Act.

(a) *Act* means the Clean Air Act as amended (42 U.S.C. 7401, *et seq.*).

(b) *Administrator* means the Administrator of the Environmental Protection Agency or his authorized representative.

(c) *Federal Indian Reservation, Indian Reservation or Reservation* means all

land within the limits of any Indian reservation under the jurisdiction of the United States government, notwithstanding the issuance of any patent, and including rights-of-way running through the reservation.

(d) *Indian tribe* or *tribe* means any Indian tribe, band, nation, or other organized group or community, including any Alaska Native village, which is federally recognized as eligible for the special programs and services provided by the United States to Indians because of their status as Indians.

(e) *State* means a state, the District of Columbia, the Commonwealth of Puerto Rico, the Virgin Islands, Guam, and American Samoa and includes the Commonwealth of the Northern Mariana Islands.

[36 FR 22421, Nov. 25, 1971, as amended at 63 FR 7274, Feb. 12, 1998]

Subpart B—Designation of Air Quality Control Regions

§ 81.11 Scope.

Air quality control regions designated by the Administrator pursuant to section 107 of the Act are listed in this subpart. Regions so designated are subject to revision, and additional regions may be designated, as the Administrator determines necessary to protect the public health and welfare.

§ 81.12 National Capital Interstate Air Quality Control Region (District of Columbia, Maryland, and Virginia).

The National Capital Interstate Air Quality Control Region (District of Columbia, Maryland, and Virginia) consists of the territorial area encompassed by the boundaries of the following jurisdictions (including the territorial area of all municipalities (as defined in section 302(f) of the Clean Air Act, 42 U.S.C. 1857h(f)) geographically located within the outermost boundaries of the area so delimited);

DISTRICT OF COLUMBIA

In the State of Maryland: Montgomery County; Prince Georges County.

In the State of Virginia: Arlington County; Fairfax County; Loudoun County; Prince William County.

(As so delimited, the Virginia portion of the region will include the city of Alexandria, the city of Fairfax, and the city of Falls Church.)

§ 81.13 New Jersey-New York-Connecticut Interstate Air Quality Control Region.

The New Jersey-New York-Connecticut Interstate Air Quality Control Region has been revised to consist of the territorial area encompassed by the boundaries of the following jurisdictions (including the territorial area of all municipalities (as defined in section 302(f) of the Clean Air Act, 42 U.S.C. 1857h(f)) geographically located within the outermost boundaries of the area so delimited):

In the State of Connecticut: Bethel Township, Bridgeport Township, Bridgewater, Brookfield Township, Danbury Township, Darien Township, Easton Township, Fairfield Township, Greenwich Township, Monroe Township, New Canaan Township, New Fairfield Township, New Milford, Newtown Township, Norwalk Township, Redding Township, Ridgefield Township, Sherman, Stamford Township, Stratford Township, Trumbull Township, Weston Township, Westport Township, Wilton Township.

In the State of New York: Bronx County, Kings County, Nassau County, New York County, Queens County, Richmond County, Rockland County, Suffolk County, Westchester County.

In the State of New Jersey: Bergen County, Essex County, Hudson County, Middlesex County, Monmouth County, Morris County, Passaic County, Somerset County, Union County.

[36 FR 22421, Nov. 25, 1971, as amended at 45 FR 84788, Dec. 23, 1980]

§ 81.14 Metropolitan Chicago Interstate Air Quality Control Region.

The Metropolitan Chicago Interstate Air Quality Control Region (Illinois-Indiana) is revised to consist of the territorial area encompassed by the boundaries of the following jurisdictions or described area (including the territorial area of all municipalities (as defined in section 302(f) of the Clean Air Act, 42 U.S.C. 1857h(f)) geographically located within the outermost boundaries of the area so delimited):

In the State of Illinois: Cook County, Du Page County, Grundy County, Kane County, Kankakee County, Kendall County, Lake County, McHenry County, Will County.

In the State of Indiana: Lake County, Porter County.

§81.15 Metropolitan Philadelphia Interstate Air Quality Control Region (Pennsylvania-New Jersey-Delaware).

The Metropolitan Philadelphia Interstate Air Quality Control Region (Pennsylvania-New Jersey-Delaware) consists of the territorial area encompassed by the boundaries of the following jurisdictions (including the territorial area of all municipalities (as defined in section 302(f) of the Clean Air Act, 42 U.S.C. 1857h(f)) geographically located within the outermost boundaries of the area so delimited):

In the State of Pennsylvania: Bucks County, Chester County, Delaware County, Montgomery County, Philadelphia County.

In the State of New Jersey: Burlington County, Camden County, Gloucester County, Mercer County, Salem County.

In the State of Delaware: New Castle County.

§81.16 Metropolitan Denver Intrastate Air Quality Control Region.

The Metropolitan Denver Intrastate Air Quality Control Region (Colorado) consists of the territorial area encompassed by the boundaries of the following jurisdictions or described area (including the territorial area of all municipalities (as defined in section 302(f) of the Clean Air Act, 42 U.S.C. 1857h(f)) geographically located within the outermost boundaries of the area so delimited):

In the State of Colorado: Adams County, Arapahoe County, Boulder County, Clear Creek County, Denver County, Douglas County, Gilpin County, Jefferson County.

(Sec. 301(a), 81 Stat. 490, 504; 42 U.S.C. 1857g(a), as amended by sec. 15(c)(2) of Pub. L. 91–604)

NOTE: For purposes of identification, the Regions are referred to by Colorado authorities as follows:

Sec.

481.172 Comanche Intrastate Air Quality Control Region: Region Three.

481.173 Grand Mesa Intrastate Air Quality Control Region: Region Seven.

481.174 Pawnee Intrastate Air Quality Control Region: Region One.

481.175 San Isabel Intrastate Air Quality Control Region: Region Four.

481.176 San Luis Intrastate Air Quality Control Region: Region Five.

481.177 Yampa Intrastate Air Quality Control Region: Region Eight.

481.16 Metropolitan Denver Intrastate Air Quality Control Region: Region Two.

§81.17 Metropolitan Los Angeles Air Quality Control Region.

The Metropolitan Los Angeles Air Quality Control Region consists of the following territorial area (including the territorial area of all municipalities (as defined in section 302(f) of the Clean Air Act, 42 U.S.C. 1857h(f)) geographically located within the outermost boundaries of the area so delimited):

Ventura County—the entire county;

Orange County—the entire county;

Riverside County—that portion of Riverside County which lies west of a line described as follows: Beginning at the point where the range line common to R. 4 E. and R. 3 E. intersects with Riverside-San Diego County boundary and running north along said range line; then east along the township line common to T. 8 S. and T. 7 S. to the southeast corner of sec. 36, T. 7 S., R. 3 E.; then north along the range line common to R. 4 E. and R. 3 E.; then east along the township line common to T. 8 S. and T. 7 S.; then north along the range line common to R. 5 E. and R. 4 E.; then west along the township line common to T. 6 S. and T. 7 S. to the southwest corner of sec. 34, T. 6 S., R. 4 E.; then north along the west boundaries of secs. 34, 27, 22, 15, 10, and 3, T. 6 S., R. 4 E.; then west along the township line common to T. 5 S. and T. 6 S.; then north along the range line common to R. 4 E. and R. 3 E.; then west along the south boundaries of secs. 13, 14, 15, 16, 17, and 18, T. 5 S., R. 3 E.; then north along the range line common to R. 2 E. and R. 3 E.; then west along the township line common to T. 4 S. and T. 3 S. to the intersection with the southwest boundary of partial sec. 31, T. 3 S., R. 1 W.; then northwest along that line to the intersection with the range line common to R. 2 W. and R. 1 W.; then north to the intersection of said range line with the Riverside-San Bernardino County line;

San Bernardino County—that portion of San Bernardino County which lies west and south of a line described as follows: Beginning at the point where the San Bernardino-Riverside County boundary is intersected by the range line common to R. 3 E. and R. 2 E. and running east along said county boundary; then north along the range line common to R. 3 E. and R. 2 E.; then west along the township line common to T. 3 N. and T. 2 N. to the intersection of said township line with the San Bernardino-Los Angeles County boundary;

Los Angeles County—that portion of Los Angeles County which lies south and west of a line described as follows: Beginning at the

point where the township line common to T. 3 N. and T. 2 N. intersects with the Los Angeles-San Bernardino County boundary and running west along said township line; then north along the range line common to R. 8 W. and R. 9 W.; then west along the township line common to T. 4 N. and T. 3 N.; then north along the range line common to R. 12 W. and R. 13 W. to the southeast corner of sec. 12, T. 5 N., R. 13 W.; then west along the south boundaries of secs. 12, 11, 10, 9, 8, and 7, T. 5 N., R. 13 W. to the boundary of the Angeles National Forest which is collinear with the range line common to R. 13 W. and R. 14 W.; then north and west along the Angeles National Forest boundary to the point of intersection with the township line common to T. 7 N. and T. 6 N. (point is at the northwest corner of sec. 4 in T. 6 N., R. 14 W.); then west along the township line common to T. 7 N. and T. 6 N.; then north along the range line common to R. 15 W. and R. 16 W. to the southeast corner of sec. 13, T. 7 N., R. 16 W.; then west along the south boundaries of secs. 13, 14, 15, 16, 17, and 18, T. 7 N., R. 16 W.; then north along the range line common to R. 16 W. and R. 17 W. to the north boundary of the Angeles National Forest (collinear with township line common to T. 8 N. and T. 7 N.); then west and north along the Angeles National Forest boundary to the point of intersection with the south boundary of the Rancho La Liebre Land Grant; then west and north along this land grant boundary to the point at which it intersects with the Los Angeles-Kern County boundary; then west along said county boundary to the northwest corner of Los Angeles County;

Santa Barbara County—that portion of Santa Barbara County which lies south of a line described as follows: Beginning at the point where the Jalama Creek runs into the Pacific Ocean and running east and north along Jalama Creek to a point of intersection with the west boundary of the San Julian Land Grant; then south along the San Julian Land Grant boundary to its southwest corner; then east along the south boundary of the San Julian Land Grant to the northeast corner of partial sec. 20, T. 5 N., R. 32 W.; then south and east along the boundary of the Las Cruces Land Grant to the southwest corner of partial sec. 22, T. 5 N., R. 32 W.; then northeast along the Las Cruces Land Grant boundary; then east along the north boundaries of sec. 13, T. 5 N., R. 32 W., and secs. 18, 17, 16, 15, 14, 13, T. 5 N., R. 31 W., and secs. 18, 17, 16, 15, 14, 13, of T. 5 N., R. 30 W., and secs. 18, 17, 16, 15, T. 5 N., R. 29 W.; then south along the east boundary of sec. 15, T. 5 N., R. 29 W.; then east along the north boundaries of secs. 23 and 24, T. 5 N., R. 29 W., and secs. 19, 20, 21, 22, 23, 24, T. 5 N., R. 28 W., and secs. 19 and 20, T. 5 N., R. 27 W.; then south along the east boundary of sec. 20, T. 5 N., R. 27 W.; then east along the north boundaries of secs. 28, 27, 26, 25, T. 5 N., R. 27 W., and sec. 30, T. 5 N., R. 26 W.; then south along the east boundary of sec. 30, T. 5 N., R. 26 W.; then east along the north boundaries of secs. 32, 33, 34, 35, T. 5 N., R. 26 W.; then south along the east boundary of sec. 35, T. 5 N., S. 26 W.; then east along the township line common to T. 4 N. and T. 5 N. to the intersection of said township line with the Santa Barbara-Ventura County boundary.

§ 81.18 Metropolitan St. Louis Interstate Air Quality Control Region.

The Metropolitan St. Louis Interstate Air Quality Control Region (Missouri-Illinois) is revised to consist of the territorial area encompassed by the boundaries of the following jurisdictions or described area (including the territorial area of all municipalities (as defined in section 302(f) of the Clean Air Act, 42 U.S.C. 1857h(f) geographically located within the outermost boundaries of the area so delimited):

In the State of Illinois: Bond County, Clinton County, Madison County, Monroe County, Randolph County, St. Clair County, Washington County.

In the State of Missouri: Franklin County, Jefferson County, St. Charles County, St. Louis City, St. Louis County.

§ 81.19 Metropolitan Boston Intrastate Air Quality Control Region.

The Metropolitan Boston Intrastate Air Quality Control Region (Massachusetts) consists of the territorial area encompassed by the boundaries of the following jurisdictions or described area (including the territorial area of all municipalities (as defined in section 302(f) of the Clean Air Act, 42 U.S.C. 1857h(f)) geographically located within the outermost boundaries of the area so delimited):

In the State of Massachusetts: CITIES—Beverly, Boston, Brockton, Cambridge, Chelsea, Everett, Gloucester, Lynn, Malden, Marlborough, Medford, Melrose, Newton, Peabody, Quincy, Revere, Salem, Somerville, Waltham, Woburn.

TOWNSHIPS—Abington, Acton, Arlington, Ashland, Avon, Bedford, Belmont, Bolton, Boxborough, Braintree, Bridgewater, Brookline, Burlington, Canton, Cohasset, Concord, Danvers, Dedham, Dover, Duxbury, East Bridgewater, Easton, Essex, Framingham, Hamilton, Hanover, Hanson, Hingham, Holbrook, Holliston, Hopkinton, Hudson, Hull, Ipswich, Lexington, Lincoln, Lynnfield, Manchester, Marblehead, Marshfield, Maynard, Medfield, Middleton, Millis, Milton,

Nahant, Natick, Needham, Norfolk, North Reading, Norwell, Norwood, Pembroke, Randolph, Reading, Rockland, Rockport, Saugus, Scituate, Sharon, Sherborn, Southborough, Stoneham, Stoughton, Stow, Sudbury, Swampscott, Topsfield, Wakefield, Walpole, Watertown, Wayland, Wellesly, Wenham, West Bridgewater, Weston, Westwood, Weymouth, Whitman, Wilmington, Winchester, Winthrop.

§ 81.20 Metropolitan Cincinnati Interstate Air Quality Control Region.

The Metropolitan Cincinnati Interstate Air Quality Control Region (Ohio-Kentucky-Indiana) is revised to consist of the territorial area encompassed by the boundaries of the following jurisdictions (including the territorial area of all municipalities (as defined in section 302(f) of the Clean Air Act, 42 U.S.C. 1857h(f) geographically located within the outermost boundaries of the area so delimited):

In the State of Kentucky: Boone County, Campbell County, Carroll County, Gallatin County, Grant County, Kenton County, Owen County, Pendleton County.

In the State of Indiana: Dearborn County, Ohio County.

In the State of Ohio: Butler County, Clermont County, Hamilton County, Warren County.

§ 81.21 San Francisco Bay Area Intrastate Air Quality Control Region.

The San Francisco Bay Area Intrastate Air Quality Control Region consists of the territorial area encompassed by the boundaries of the following jurisdictions (including the territorial area of all municipalities as defined in section 302(f) of the Clean Air Act, 42 U.S.C. 1857h(f) geographically located within the outermost boundaries of the area so delimited):

In the State of California: Alameda County, Contra Costa County, Marin County, Napa County; San Francisco County, San Mateo County, Santa Clara County.

Solano County—that portion of Solano County which lies south and west of a line described as follows: Beginning at the intersection of the westerly boundary of Solano County and the ¼ section line running east and west through the center of Section 34, T. 6 N., R. 2 W., M.D.B. & M., thence east along said ¼ section line to the east boundary of Section 36, T. 6 N., R. 2 W., thence south ½ mile and east 2.0 miles, more or less, along the west and south boundary of Los Putos Rancho to the northwest corner of Section 4, T. 5 N., R. 1 W., thence east along a line common to T. 5 N. and T. 6 N. to the northeast corner of Section 3, T. 5 N., R. 1 E., thence south along section lines to the southeast corner of Section 10, T 3 N., R. 1 E., thence east along section lines to the south ¼ corner of Section 8, T. 3 N., R. 2 E., thence east to the boundary between Solano and Sacramento Counties.

Sonoma County—that portion of Sonoma County which lies south and east of a line described as follows:Beginning at the southeasterly corner of the Rancho Estero Americano, being on the boundary line between Marin and Sonoma Counties, California; thence running northerly along the easterly boundary line of said Rancho Estero Americano to the northeasterly corner thereof, being an angle corner in the westerly boundary line of Rancho Canada de Jonive; thence running along said boundary of Rancho Canada de Jonive westerly, northerly and easterly to its intersection with the easterly line of Graton Road; thence running along the easterly and southerly line of Graton Road, northerly and easterly to its intersection with the easterly line of Sullivan Road; thence running northerly along said easterly line of Sullivan Road to the southerly line of Green Valley Road; thence running easterly along the said southerly line of Green Valley Road and easterly along the southerly line of State Highway 116, to the westerly line of Vine Hill Road; thence running along the westerly and northerly line of Vine Hill Road, northerly and easterly to its intersection with the westerly line of Laguna Road; thence running northerly along the westerly line of Laguna Road and the northerly projection thereof to the northerly line of Trenton Road; thence running westerly along the northerly line of said Trenton Road to the easterly line of Trenton-Healdsburg Road; thence running northerly along said easterly line of Trenton-Healdsburg Road to the easterly line of Eastside Road; thence running northerly along said easterly line of Eastside Road to its intersection with the southerly line of Rancho Sotoyome; thence running easterly along said southerly line of Rancho Sotoyome to its intersection with the township line common to Townships 8 and 9 North, Mt. Diablo Base and Meridian; thence running easterly along said township line to its intersection with the boundary line between Sonoma and Napa Counties, State of California.

[36 FR 22421, Nov. 25, 1971, as amended at 46 FR 3889, Jan. 16, 1981]

§ 81.22 Greater Metropolitan Cleveland Intrastate Air Quality Control Region.

The Greater Metropolitan Cleveland Intrastate Air Quality Control Region

(Ohio) consists of the territorial area encompassed by the boundaries of the following jurisdictions or described area (including the territorial area of all municipalities (as defined in section 302(f) of the Clean Air Act, 42 U.S.C. 1857h(f)) geographically located within the outermost boundaries of the area so delimited):

In the State of Ohio: Lorain County, Cuyahoga County, Lake County, Geauga County, Portage County, Summit County, Medina County, Stark County.

§ 81.23 Southwest Pennsylvania Intrastate Air Quality Control Region.

The Southwest Pennsylvania Intrastate Air Quality Control Region is redesignated to consist of the territorial area encompassed by the boundaries of the following jurisdictions or described area (including the territorial area of all municipalities (as defined in section 302(f) of the Clean Air Act, 42 U.S.C. 1857h(f)) geographically located within the outermost boundaries of the area so delimited):

In the State of Pennsylvania: Allegheny County, Armstrong County, Beaver County, Butler County, Greene County, Fayette County, Indiana County, Washington County, Westmoreland County.

§ 81.24 Niagara Frontier Intrastate Air Quality Control Region.

The Niagara Frontier Intrastate Air Quality Control Region (New York) consists of the territorial area encompassed by the boundaries of the following jurisdictions or described area (including the territorial area of all municipalities (as defined in section 302(f) of the Clean Air Act, 42 U.S.C. 1857H(f)) geographically located within the outermost boundaries of the area so delimited):

In the State of New York: Erie County, Niagara County.

§ 81.25 Metropolitan Kansas City Interstate Air Quality Control Region.

The Metropolitan Kansas City Interstate Air Quality Control Region (Missouri-Kansas) consists of the territorial area encompassed by the boundaries of the following jurisdictions or described area (including the territorial area of all municipalities (as defined in section 302(f) of the Clean Air Act, 42 U.S.C. 1857h(f) geographically located within the outermost boundaries of the area so delimited):

In the State of Missouri: Buchanan County, Cass County, Clay County, Jackson County, Platte County, Ray County.

In the State of Kansas: Johnson County, Leavenworth County, Wyandotte County.

§ 81.26 Hartford-New Haven-Springfield Interstate Air Quality Control Region.

The Hartford-New Haven-Springfield Interstate Air Quality Control Region (Connecticut-Massachusetts) consists of the territorial area encompassed by the boundaries of the following juridictions or described area (including the territorial area of all municipalities (as defined in section 302(f) of the Clean Air Act, 42 U.S.C. 1857h(f)) geographically located within the outermost boundaries of the area so delimited):

In the State of Connecticut: CITIES—Ansonia, Bristol, Derby, Hartford, Meriden, Middletown, Milford, New Britain, New Haven, Shelton, Waterbury, West Haven.

TOWNSHIPS—Andover, Avon, Beacon Falls, Berlin, Bethany, Bethlehem, Bloomfield, Bolton, Branford, Burlington, Canton, Cheshire, Cromwell, Durham, East Granby, East Haddam, East Hampton, East Hartford, East Haven, East Windsor, Ellington, Enfield, Farmington, Glastonbury, Granby, Guilford, Haddam, Hamden, Hebron, Madison, Manchester, Marlborough, Middlebury, Middlefield, Naugatuck, Newington, North Branford, North Haven, Orange, Oxford, Plainville, Plymouth, Portland, Prospect, Rocky Hill, Seymour, Simsbury, Somers, Southbury, Southington, South Windsor, Suffield, Thomaston, Tolland, Vernon, Wallingford, Watertown, West Hartford, Wethersfield, Windsor, Windsor Locks, Wolcott, Woodbridge, Woodbury.

In the State of Massachusetts: Franklin County.

CITIES—Chicopee, Holyoke, Northampton, Springfield, Westfield.

TOWNSHIPS—Agawam, Amherst, Belchertown, Blandford, Brimfield, Chester, Chesterfield, Cummington, Easthampton, East Longmeadow, Goshen, Granby, Granville, Hadley, Hampden, Hatfield, Holland, Huntington, Longmeadow, Ludlow, Middlefield, Monson, Montgomery, Palmer, Pelham, Plainfield, Russell, Southampton, Southwick, South Hadley, Tolland, Wales, Ware, Westhampton, West Springfield, Wilbraham, Williamsburg, Worthington.

§81.27 Minneapolis-St. Paul Intrastate Air Quality Control Region.

The Minneapolis-St. Paul Intrastate Air Quality Control Region (Minnesota) consists of the territorial area encompassed by the boundaries of the following jurisdictions or described area (including the territorial area of all municipalities (as defined in section 302(f) of the Clean Air Act, 42 U.S.C. 1857h(f)) geographically located within the outermost boundaries of the area so delimited):

In the State of Minnesota: Anoka County, Carver County, Dakota County, Hennepin County, Ramsey County, Scott County, Washington County.

§81.28 Metropolitan Baltimore Intrastate Air Quality Control Region.

The Metropolitan Baltimore Intrastate Air Quality Control Region (Maryland) consists of the territorial area encompassed by the boundaries of the following jurisdictions or described area (including the territorial area of all municipalities (as defined in section 302(f) of the Clean Air Act, 42 U.S.C. 1857h(f)) geographically located within the outermost boundaries of the area so delimited):

In the State of Maryland: Anne Arundel County, Baltimore City, Baltimore County, Carroll County, Harford County, Howard County.

§81.29 Metropolitan Indianapolis Intrastate Air Quality Control Region.

The Metropolitan Indianapolis Intrastate Air Quality Control Region consists of the territorial area encompassed by the boundaries of the following jurisdictions or described area (including the territorial area of all municipalities (as defined in section 302(f) of the Clean Air Act, 42 U.S.C. 1857h(f)) geographically located within the outermost boundaries of the area so delimited):

In the State of Indiana: Boone County, Hamilton County, Hancock County, Hendricks County, Johnson County, Marion County, Morgan County, Shelby County.

§81.30 Southeastern Wisconsin Intrastate Air Quality Control Region.

The Metropolitan Milwaukee Intrastate Air Quality Control Region (Wisconsin) has been renamed the Southeastern Wisconsin Intrastate Air Quality Control Region and consists of the territorial area encompassed by the boundaries of the following jurisdictions or described area (including the territorial area of all municipalities (as defined in section 302(f) of the Clean Air Act, 42 U.S.C. 1857h(f)) geographically located within the outermost boundaries of the area so delimited):

In the State of Wisconsin: Kenosha County, Milwaukee County, Ozaukee County, Racine County, Walworth County, Washington County, Waukesha County.

§81.31 Metropolitan Providence Interstate Air Quality Control Region.

The Metropolitan Providence Interstate Air Quality Control Region (Rhode Island-Massachusetts) consists of the territorial area encompassed by the boundaries of the following jurisdictions or described area (including the territorial area of all municipalities (as defined in section 302(f) of the Clean Air Act, 42 U.S.C. 1857h(f)) geographically located within the outermost boundaries of the area so delimited):

The Entire State of Rhode Island.

In the State of Massachusetts: Cities—Attleboro, Fall River, Acushnet, Barnstable, Bellingham, Berkley, Bourne, Brewster, Carver, Chatham, Chilmark, Dartmouth, Dennis, Dighton, Eastham, Edgartown, Fairhaven, Falmouth, Foxborough, Franklin, Freetown, Gay Head, Gosnold, Halifax, Harwich, Kingston, Lakeville, Mansfield, Marion, Mashpee, New Bedford, Taunton.

TOWNSHIPS—Middleborough, Milford, Nantucket, North Attleborough, Mattapoisett, Medway, Norton, Oak Bluffs, Orleans, Plainville, Plymouth, Plympton, Provincetown, Raynham, Rehoboth, Rochester, Sandwich, Seekonk, Somerset, Swansea, Tisbury, Truro, Wareham, Wellfleet, Westport, West Tisbury, Wrentham, Yarmouth.

§81.32 Puget Sound Intrastate Air Quality Control Region.

The Puget Sound Intrastate Air Quality Control Region (Washington) consists of the territorial area encompassed by the boundaries of the following jurisdictions or described area (including the territorial area of all municipalities (as defined in section 302(f) of the Clean Air Act, 42 U.S.C. 1857h(f)) geographically located within

the outermost boundaries of the area so delimited):

In the State of Washington: King County, Snohomish County, Pierce County, Kitsap County.

§ 81.33 Steubenville-Weirton-Wheeling Interstate Air Quality Control Region.

The Steubenville-Weirton-Wheeling Interstate Air Quality Control Region (Ohio-West Virginia) consists of the territorial area encompassed by the boundaries of the following jurisdictions or described area (including the territorial area of all municipalities (as defined in section 302(f) of the Clean Air Act, 42 U.S.C. 1857h(f)) geographically located within the outermost boundaries of the area so delimited):

In the State of Ohio: Belmont County, Columbiana County, Jefferson County, Monroe County.

In the State of West Virginia: Brooke County, Hancock County, Marshall County, Ohio County.

§ 81.34 Metropolitan Dayton Intrastate Air Quality Control Region.

The Metropolitan Dayton Intrastate Air Quality Control Region consists of the territorial area encompassed by the boundaries of the following jurisdictions or described area (including the territorial area of all municipalities (as defined in section 302(f) of the Clean Air Act, 42 U.S.C. 1857h(f)) geographically located within the outermost boundaries of the area so delimited):

In the State of Ohio: Clark County, Darke County, Greene County, Miami County, Montgomery County, Preble County.

§ 81.35 Louisville Interstate Air Quality Control Region.

The Louisville Interstate Air Quality Control Region (Kentucky-Indiana) consists of the territorial area encompassed by the boundaries of the following jurisdictions or described area (including the territorial area of all municipalities (as defined in section 302(f) of the Clean Air Act, 42 U.S.C. 1857h(f)) geographically located within the outermost boundaries of the area so delimited):

In the State of Kentucky: Jefferson County.

In the State of Indiana: Floyd County, Clark County.

§ 81.36 Maricopa Intrastate Air Quality Control Region.

The Phoenix-Tucson Intrastate Air Quality Control Region has been renamed the Maricopa Intrastate Air Quality Control Region (Arizona) and has been revised to consist of the territorial area encompassed by the boundaries of the following jurisdictions or described area (including the territorial area of all municipalities (as defined in section 302(f) of the Clean Air Act, 42 U.S.C. 1857h(f)) geographically located within the outermost boundaries of the area so delimited):

In the State of Arizona: Maricopa County.

[45 FR 67347, Oct. 10, 1980]

§ 81.37 Metropolitan Detroit-Port Huron Intrastate Air Quality Control Region.

The Metropolitan Detroit-Port Huron Intrastate Air Quality Control Region (Michigan) consists of the territorial area encompassed by the boundaries of the following jurisdictions or described area (including the territorial area of all municipalities (as defined in section 302(f) of the Clean Air Act, 42 U.S.C. 1857h(f)) geographically located within the outermost boundaries of the area so delimited):

In the State of Michigan: Macomb County, St. Clair County, Oakland County, Wayne County.

§ 81.38 Metropolitan Houston-Galveston Intrastate Air Quality Control Region.

The Metropolitan Houston-Galveston Intrastate Air Quality Control Region (Texas) has been revised to consist of the territorial area encompassed by the boundaries of the following jurisdictions or described area (including the territorial area of all municipalities (as defined in section 302(f) of the Clean Air Act, 42 U.S.C. 1857h(f)) geographically located within the outermost boundaries of the area so delimited):

In the State of Texas: Austin County, Brazoria County, Chambers County, Colorado County, Fort Bend County, Galveston County, Harris County, Liberty County, Matagorda County, Montgomery County,

Walker County, Waller County, Wharton County.

[36 FR 22421, Nov. 25, 1971, as amended at 56 FR 37289, Aug. 6, 1991; 62 FR 30272, June 3, 1997]

§81.39 Metropolitan Dallas-Fort Worth Intrastate Air Quality Control Region.

The Metropolitan Dallas-Fort Worth Intrastate Air Quality Control Region (Texas) has been revised to consist of the territorial area encompassed by the boundaries of the following jurisdictions or described area (including the territorial area of all municipalities (as defined in section 302(f) of the Clean Air Act, 42 U.S.C. 1857h(f)) geographically located within the outermost boundaries of the area so delimited):

In the State of Texas: Collin County, Cooke County, Dallas County, Denton County, Ellis County, Erath County, Fannin County, Grayson County, Hood County, Hunt County, Johnson County, Kaufman County, Navarro County, Palo Pinto County, Parker County, Rockwall County, Somervell County, Tarrant County, Wise County.

§81.40 Metropolitan San Antonio Intrastate Air Quality Control Region.

The Metropolitan San Antonio Intrastate Air Quality Control Region (Texas) has been revised to consist of the territorial area encompassed by the boundaries of the following jurisdictions or described area (including the territorial area of all municipalities (as defined in section 302(f) of the Clean Air Act, 42 U.S.C. 1857h(f)) geographically located within the outermost boundaries of the area so delimited):

In the State of Texas: Atascosa County, Bandera County, Bexar County, Comal County, Dimmit County, Edwards County, Frio County, Gillespie County, Guadalupe County, Karnes County, Kendall County, Kerr County, Kinney County, La Salle County, Maverick County, Medina County, Real County, Uvalde County, Val Verde County, Wilson County, Zavala County.

[36 FR 22421, Nov. 25, 1971, as amended at 62 FR 30272, June 3, 1997]

§81.41 Metropolitan Birmingham Intrastate Air Quality Control Region.

The Metropolitan Birmingham Intrastate Air Quality Control Region (Alabama) has been revised to consist of the territorial area encompassed by the boundaries of the following jurisdictions or described area (including the territorial area of all municipalities (as defined in section 302(f) of the Clean Air Act, 42 U.S.C. 1857h(f)) geographically located within the outermost boundaries of the area so delimited):

In the State of Alabama: Bibb County, Blount County, Chilton County, Fayette County, Greene County, Hale County, Jefferson County, Lamar County, Pickens County, St. Clair County, Shelby County, Sumter County, Tuscaloosa County, Walker County.

§81.42 Chattanooga Interstate Air Quality Control Region.

The Chattanooga Interstate Air Quality Control Region (Georgia-Tennessee) has been revised to consist of the territorial area encompassed by the boundaries of the following jurisdictions or described area (including the territorial area of all municipalities (as defined in section 302(f) of the Clean Air Act, 42 U.S.C. 1857h(f)) geographically located within the outermost boundaries of the area so delimited):

In the State of Georgia: Bartow County, Catoosa County, Chattooga County, Cherokee County, Dade County, Fannin County, Floyd County, Gilmer County, Gordon County, Haralson County, Murray County, Paulding County, Pickens County, Polk County, Walker County, Whitfield County.

In the State of Tennessee: Hamilton County.

§81.43 Metropolitan Toledo Interstate Air Quality Control Region.

The Metropolitan Toledo Interstate Air Quality Control Region (Ohio-Michigan) consists of the territorial area encompassed by the boundaries of the following jurisdictions or described area (including the territorial area of all municipalities (as defined in section 302(f) of the Clean Air Act, 42 U.S.C. 1857h(f)) geographically located within the outermost boundaries of the area so delimited):

In the State of Ohio: Lucas County, Wood County.

In the State of Michigan: Monroe County.

§ 81.44 Metropolitan Memphis Interstate Air Quality Control Region.

The Metropolitan Memphis Interstate Air Quality Control Region (Arkansas-Mississippi-Tennessee) consists of the territorial area encompassed by the boundaries of the following jurisdictions or described area (including the territorial area of all municipalities (as defined in sec. 302(f) of the Clean Air Act, 42 U.S.C. 1857h(f)) geographically located within the outermost boundaries of the area so delimited):

In the State of Arkansas: Crittenden County.

In the State of Mississippi: De Soto County.

In the State of Tennessee: Shelby County.

§ 81.45 Metropolitan Atlanta Intrastate Air Quality Control Region.

The Metropolitan Atlanta Intrastate Air Quality Control Region (Georgia) has been revised to consist of the territorial area encompassed by the boundaries of the following jurisdictions or described area (including the territorial area of all municipalities (as defined in section 302(f) of the Clean Air Act, 42 U.S.C. 1857h(f)) geographically located within the outermost boundaries of the area so delimited):

In the State of Georgia: Butts County, Carroll County, Clayton County, Cobb County, Coweta County, De Kalb County, Douglas County, Fayette County, Fulton County, Gwinnett County, Heard County, Henry County, Lamar County, Meriwether County, Pike County, Rockdale County, Spalding County, Troup County, Upson County.

§ 81.46 U.S. Virgin Islands Air Quality Control Region.

The U.S. Virgin Islands Air Quality Control Region consists of the territorial area encompassed by the boundaries of the following jurisdictions or described area (including the territorial area of all municipalities (as defined in section 302(f) of the Clean Air Act, 42 U.S.C. 1857h(f)) geographically located within the outermost boundaries of the area so delimited):

The entire U.S. Virgin Islands.

§ 81.47 Central Oklahoma Intrastate Air Quality Control Region.

The Metropolitan Oklahoma Intrastate Air Quality Control Region has been renamed the Central Oklahoma Intrastate Air Quality Control Region and consists of the territorial area encompassed by the boundaries of the following jurisdictions or described area (including the territorial area of all municipalities (as defined in section 302(f) of the Clean Air Act, 42 U.S.C. 1857h(f)) geographically located within the outermost boundaries of the area so delimited):

In the State of Oklahoma: Canadian County, Cleveland County, Grady County, Lincoln County, Logan County, Kingfisher County, McClain County, Oklahoma County, Pottawatomie County.

§ 81.48 Champlain Valley Interstate Air Quality Control Region.

The Champlain Valley Interstate Air Quality Control Region (Vermont-New York) has been revised to consist of the territorial area encompassed by the boundaries of the following jurisdictions or described area (including the territorial area of all municipalities (as defined in section 302(f) of the Clean Air Act, 42 U.S.C. 1857h(f)) geographically located within the outermost boundaries of the area so delimited):

In the State of Vermont: Addison County, Chittenden County, Franklin County, Grand Isle County, Rutland County.

In the State of New York: Clinton County, Essex County, Franklin County, Hamilton County, St. Lawrence County, Warren County, Washington County.

§ 81.49 Southeast Florida Intrastate Air Quality Control Region.

The Southeast Florida Intrastate Air Quality Control Region is redesignated to consist of the territorial area encompassed by the boundaries of the following jurisdictions or described area (including the territorial area of all municipalities (as defined in section 302(f) of the Clean Air Act, 42 U.S.C. 1857h(f)) geographically located within the outermost boundaries of the area so delimited):

In the State of Florida: Broward County, Dade County, Indian River County, Martin County, Monroe County, Okeechobee County, Palm Beach County, St. Lucie County.

§81.50 Metropolitan Omaha-Council Bluffs Interstate Air Quality Control Region.

The Metropolitan Omaha-Council Bluffs Interstate Air Quality Control Region (Nebraska-Iowa) consists of the territorial area encompassed by the boundaries of the following jurisdictions or described area (including the territorial area of all municipalities (as defined in section 302(f) of the Clean Air Act, 42 U.S.C. 1857h(f)) geographically located within the outermost boundaries of the area so delimited):

In the State of Nebraska: Douglas County, Sarpy County.

In the State of Iowa: Pottawattamie County.

§81.51 Portland Interstate Air Quality Control Region.

The Portland Interstate Air Quality Control Region (Oregon-Washington) has been revised to consist of the territorial area encompassed by the boundaries of the following jurisdictions or described area (including the territorial area of all municipalities (as defined in section 302(f) of the Clean Air Act, 42 U.S.C. 1857h(f)) geographically located within the outermost boundaries of the area so delimited):

In the State of Oregon: Benton County, Clackamas County, Columbia County, Lane County, Linn County, Marion County, Multnomah County, Polk County, Washington County, Yamhill County.

In the State of Washington: Clark County, Cowlitz County, Lewis County, Skamania County, Wahkiakum County.

NOTE: For purposes of identification, the Portland Interstate Air Quality Control Region (Oregon-Washington) will be referred to by Washington authorities as the Portland (Oregon)-Southwest Washington Interstate Air Quality Control Region.

§81.52 Wasatch Front Intrastate Air Quality Control Region.

The Wasatch Front Intrastate Air Quality Control Region (Utah) consists of the territorial area encompassed by the boundaries of the following jurisdictions or described area (including the territorial area of all municipalities (as defined in section 302(f) of the Clean Air Act, 42 U.S.C. 1857h(f)) geographically located within the outermost boundaries of the area so delimited):

In the State of Utah: Davis County, Salt Lake County, Tooele County, Utah County, Weber County.

§81.53 Southern Louisiana-Southeast Texas Interstate Air Quality Control Region.

The Southern Louisiana-Southwest Texas Interstate Air Quality Control Region has been revised to consist of the territorial area encompassed by the boundaries of the following jurisdictions or described area (including the territorial area of all municipalities (as defined in section 302(f) of the Clean Air Act, 42 U.S.C. 1857(h)(f)) geographically located within the outermost boundaries of the area so delimited):

In the State of Louisiana: Acadia Parish, Allen Parish, Ascension Parish, Assumption Parish, Beauregard Parish, Calcasieu Parish, Cameron Parish, East Baton Rouge Parish, East Feliciana Parish, Evangeline Parish, Iberia Parish, Iberville Parish, Jefferson Davis Parish, Jefferson Parish, Lafayette Parish, Lafourche Parish, Livingston Parish, Orleans Parish, Plaquemines Parish, Pointe Coupee Parish, St. Bernard Parish, St. Charles Parish, St. Helena Parish, St. James Parish, St. John the Baptist Parish, St. Landry Parish, St. Martin Parish, St. Mary Parish, St. Tammany Parish, Tangipahoa Parish, Terrebonne Parish, Vermilion Parish, Washington Parish, West Baton Rouge Parish, West Feliciana Parish.

In the State of Texas: Angelina County, Hardin County, Houston County, Jasper County, Jefferson County, Nacogdoches County, Newton County, Orange County, Polk County, Sabine County, San Augustine County, San Jacinto County, Shelby County, Trinity County, Tyler County.

[36 FR 22421, Nov. 25, 1971, as amended at 56 FR 37289, Aug. 6, 1991; 62 FR 30272, June 3, 1997; 67 FR 57334, Sept. 10, 2002]

§81.54 Cook Inlet Intrastate Air Quality Control Region.

The Cook Inlet Intrastate Air Quality Control Region (Alaska) consists of the territorial area encompassed by the boundaries of the following jurisdictions or described area (including the territorial area of all municipalities (as defined in section 302(f) of the Clean Air Act, 42 U.S.C. 1857h(f)) geographically located within the outermost boundaries of the area so delimited):

In the State of Alaska: Greater Anchorage Area Borough, Kenai Peninsula Borough, Matanuska-Susitna Borough.

§ 81.55 Northeast Pennsylvania-Upper Delaware Valley Interstate Air Quality Control Region.

The Northeast Pennsylvania-Upper Delaware Valley Interstate Air Quality Control Region (Pennsylvania-New Jersey) is redesignated to consist of the territorial area encompassed by the boundaries of the following jurisdictions or described area (including the territorial area of all municipalities (as defined in section 302(f) of the Clean Air Act, 42 U.S.C. 1857h(f)) geographically located within the outermost boundaries of the area so delimited):

In the State of Pennsylvania: Berks County, Bradford County, Carbon County, Lackawanna County, Lehigh County, Luzerne County, Monroe County, Northampton County, Pike County, Schuylkill County, Sullivan County, Susquehanna County, Tioga County, Wayne County, Wyoming County.

In the State of New Jersey: Hunterdon County, Sussex County, Warren County.

§ 81.57 Eastern Tennessee-Southwestern Virginia Interstate Air Quality Control Region.

The Bristol (Virginia)-Johnson City (Tennessee) Interstate Air Quality Control Region has been renamed the Eastern Tennessee-Southwestern Virginia Interstate Air Quality Control Region and revised to consist of the territorial area encompassed by the boundaries of the following jurisdictions or described area (including the territorial area of all municipalities (as defined in section 302(f) of the Clean Air Act, 42 U.S.C. 1857h(f)) geographically located within the outermost boundaries of the area so delimited):

In the State of Tennessee: Anderson County, Blount County, Bradley County, Campbell County, Carter County, Claiborne County, Cocke County, Grainger County, Greene County, Hamblen County, Hancock County, Hawkins County, Jefferson County, Johnson County, Knox County, Loudon County, McMinn County, Meigs County, Monroe County, Polk County, Rhea County, Roane County, Sevier County, Sullivan County, Unicoi County, Union County, Washington County.

In the State of Virginia: Bland County, Bristol City, Buchanan County, Carroll County, Dickenson County, Galax City, Grayson County, Lee County, Norton City, Russell County, Scott County, Smyth County, Tazewell County, Washington County, Wise County, Wythe County.

§ 81.58 Columbus (Georgia)-Phenix City (Alabama) Interstate Air Quality Control Region.

The Columbus (Georgia)-Phenix City (Alabama) Interstate Air Quality Control Region has been revised to consist of the territorial area encompassed by the boundaries of the following jurisdictions or described area (including the territorial area of all municipalities (as defined in section 302(f) of the Clean Air Act, 42 U.S.C. 1857h(f)) geographically located within the outermost boundaries of the area so delimited):

In the State of Alabama: Autauga County, Bullock County, Butler County, Crenshaw County, Elmore County, Lee County, Lowndes County, Macon County, Montgomery County, Pike County, Russell County.

In the State of Georgia: Chattahoochee County, Dooly County, Harris County, Marion County, Muscogee County, Quitman County, Schley County, Stewart County, Sumter County, Talbot County, Taylor County, Webster County.

§ 81.59 Cumberland-Keyser Interstate Air Quality Control Region.

The Cumberland-Keyser Interstate Air Quality Control Region (Maryland-West Virginia) has been revised to consist of the territorial area encompassed by the boundaries of the following jurisdictions (including the territorial area of all municipalities (as defined in section 302(f) of the Clean Air Act, 42 U.S.C. 1857h(f)) geographically located within the outermost boundaries of the area so delimited):

In the State of Maryland: Allegany County, Garrett County, Washington County.

In the State of West Virginia: In Grant County: Union Magisterial District.

In Mineral County: Elk Magisterial District, New Creek Magisterial District, Piedmont Magisterial District.

§ 81.60 Duluth (Minnesota)-Superior (Wisconsin) Interstate Air Quality Control Region.

The Duluth (Minnesota)-Superior (Wisconsin) Interstate Air Quality Control Region has been revised to consist of the territorial area encompassed by

the boundaries of the following jurisdictions or described area (including the territorial area of all municipalities (as defined in section 302(f) of the Clean Air Act, 42 U.S.C. 1857h(f)) geographically located within the outermost boundaries of the area so delimited):

In the State of Minnesota: Aitkin County, Carlton County, Cook County, Itasca County, Koochiching County, Lake County, St. Louis County.

In the State of Wisconsin: Ashland County, Bayfield County, Burnett County, Douglas County, Iron County, Price County, Rusk County, Sawyer County, Taylor County, Washburn County.

§ 81.61 Evansville (Indiana)-Owensboro-Henderson (Kentucky) Interstate Air Quality Control Region.

The Evansville (Indiana)-Owensboro-Henderson (Kentucky) Interstate Air Quality Control Region is revised to consist of the territorial area encompassed by the boundaries of the following jurisdictions (including the territorial area of all municipalities (as defined in section 302(f) of the Clean Air Act, 42 U.S.C. 1857h(f)) geographically located within the outermost boundaries of the area so delimited):

In the State of Kentucky: Daviess County, Hancock County, Henderson County, McLean County, Ohio County, Union County, Webster County.

In the State of Indiana: Dubois County, Gibson County, Perry County, Pike County, Posey County, Spencer County, Vanderburgh County, Warrick County.

§ 81.62 Northeast Mississippi Intrastate Air Quality Control Region.

The Alabama-Mississippi-Tennessee Interstate Air Quality Control Region has been renamed the Northeast Mississippi Intrastate Air Quality Control Region and revised to consist of the territorial area encompassed by the boundaries of the following jurisdictions or described area (including the territorial area of all municipalities (as defined in section 302(f) of the Clean Air Act, 42 U.S.C. 1857h(f)) geographically located within the outermost boundaries of the area so delimited):

In the State of Mississippi: Alcorn County, Attala County, Benton County, Calhoun County, Carroll County, Chickasaw County, Choctaw County, Clay County, Grenada County, Holmes County, Itawamba County, Kemper County, Lafayette County, Leake County, Lee County, Lowndes County, Marshall County, Monroe County, Montgomery County, Neshoba County, Noxubee County, Oktibbeha County, Panola County, Pontotoc County, Prentiss County, Tate County, Tippah County, Tishomingo County, Union County, Webster County, Winston County, Yalobusha County.

§ 81.63 Metropolitan Fort Smith Interstate Air Quality Control Region.

The Metropolitan Fort Smith Interstate Air Quality Control Region (Arkansas-Oklahoma) has been revised to consist of the territorial area encompassed by the boundaries of the following jurisdictions or described area (including the territorial area of all municipalities (as defined in section 302(f) of the Clean Air Act, 42 U.S.C. 1857h(f)) geographically located within the outermost boundaries of the area so delimited):

In the State of Arkansas: Benton County, Crawford County, Sebastian County, Washington County.

In the State of Oklahoma: Adair County, Cherokee County, Le Flore County, Sequoyah County.

§ 81.64 Huntington (West Virginia)-Ashland (Kentucky)-Portsmouth-Ironton (Ohio) Interstate Air Quality Control Region.

The Huntington (West Virginia)-Ashland (Kentucky)-Portsmouth-Ironton (Ohio) Interstate Air Quality Control Region is revised to consist of the territorial area encompassed by the boundaries of the following jurisdictions of described area (including the territorial area of all municipalities (as defined in section 302(f) of the Clean Air Act, 42 U.S.C. 1857h(f)) geographically located within the outermost boundaries of the area so delimited):

In the State of Kentucky: Bath County, Boyd County, Bracken County, Carter County, Elliott County, Fleming County, Greenup County, Lawrence County, Lewis County, Mason County, Menifee County, Montgomery County, Morgan County, Robertson County, Rowan County.

In the State of Ohio: Adams County, Brown County, Gallia County, Lawrence County, Scioto County.

In the State of West Virginia: Cabell County, Mason County, Wayne County.

§ 81.65 Joplin (Missouri)-Northeast Oklahoma Interstate Air Quality Control Region.

The Joplin (Missouri)-Northeast Oklahoma Interstate Air Quality Control Region, designated on December 8, 1970, and consisting of the counties of Barton, Jasper, McDonald, and Newton in the State of Missouri and Craig, Delaware, and Ottawa in the State of Oklahoma, is revoked effective upon publication.

§ 81.66 Southeast Minnesota-La Crosse (Wisconsin) Interstate Air Quality Control Region.

The Southeast Minnesota-La Crosse (Wisconsin) Interstate Air Quality Control Region has been revised to consist of the territorial area encompassed by the boundaries of the following jurisdictions or described area (including the territorial area of all municipalities (as defined in section 302(f) of the Clean Air Act, 42 U.S.C. 1857m(f)) geographically located within the outermost boundaries of the area so delimited):

In the State of Minnesota: Blue Earth County, Brown County, Dodge County, Fairbault County, Fillmore County, Freeborn County, Goodhue County, Houston County, Le Sueur County, Martin County, Mower County, Nicollet County, Olmsted County, Rice County, Sibley County, Steele County, Wabasha County, Waseca County, Watonwan County, Winona County.

In the State of Wisconsin: Barron County, Buffalo County, Chippewa County, Clark County, Crawford County, Dunn County, Eau Claire County, Jackson County, La Crosse County, Monroe County, Pepin County, Pierce County, Polk County, St. Croix County, Trempealeau County, Vernon County.

§ 81.67 Lake Michigan Intrastate Air Quality Control Region.

The Menominee-Escanaba (Michigan)-Marinette (Wisconsin) Interstate Air Quality Control Region has been renamed the Lake Michigan Intrastate Air Quality Control Region (Wisconsin) and revised to consist of the territorial area encompassed by the boundaries of the following jurisdictions or described area (including the territorial area of all municipalities (as defined in section 302(f) of the Clean Air Act, 42 U.S.C. 1857h(f)) geographically located within the outermost boundaries of the area so delimited):

In the State of Wisconsin: Brown County, Calumet County, Door County, Fond du Lac County, Green Lake County, Kewaunee County, Manitowoc County, Marinette County, Marquette County, Menominee County, Oconto County, Outagamie County, Shawano County, Sheboygan County, Waupaca County, Waushara County, Winnebago County.

§ 81.68 Mobile (Alabama)-Pensacola-Panama City (Florida)-Southern Mississippi Interstate Air Quality Control Region.

The Mobile (Alabama)-Pensacola-Panama City (Florida)-Gulfport (Mississippi) Interstate Air Quality Control Region has been renamed the Mobile (Alabama)-Pensacola-Panama City (Florida)-Southern Mississippi Interstate Air Quality Control Region and revised to consist of the territorial area encompassed by the boundaries of the following jurisdictions or described area (including the territorial area of all municipalities (as defined in section 302(f) of the Clean Air Act, 42 U.S.C. 1857h(f)) geographically located within the outermost boundaries of the area so delimited):

In the State of Alabama: Baldwin County, Escambia County, Mobile County.

In the State of Florida: Bay County, Calhoun County, Escambia County, Gulf County, Holmes County, Jackson County, Okaloosa County, Santa Rosa County, Walton County, Washington County.

In the State of Mississippi: Adams County, Amite County, Clairborne County, Clarke County, Copiah County, Covington County, Forrest County, Franklin County, George County, Greene County, Hancock County, Harrison County, Hinds County, Jackson County, Jasper County, Jefferson County, Jefferson Davis County, Jones County, Lamar County, Lauderdale County, Lawrence County, Lincoln County, Madison County, Marion County, Newton County, Pearl River County, Perry County, Pike County, Rankin County, Scott County, Simpson County, Smith County, Stone County, Walthall County, Warren County, Wayne County, Wilkinson County.

§ 81.69 Paducah (Kentucky)-Cairo (Illinois) Interstate Air Quality Control Region.

The Paducah (Kentucky)-Cairo (Illinois) Interstate Air Quality Control Region is revised to consist of the territorial area encompassed by the

boundaries of the following jurisdictions or described area (including the territorial area of all municipalities (as defined in section 302(f) of the Clean Air Act, 42 U.S.C. 1857h(f)) geographically located within the outermost boundaries of the area so delimited):

In the State of Illinois: Alexander County, Johnson County, Massac County, Pope County, Pulaski County, Union County.

In the State of Kentucky: Ballard County, Caldwell County, Calloway County, Carlisle County, Christian County, Crittenden County, Fulton County, Graves County, Hickman County, Hopkins County, Livingston County, Lyon County, Marshall County, McCracken County, Muhlenberg County, Todd County, Trigg County.

§81.70 Parkersburg (West Virginia)-Marietta (Ohio) Interstate Air Quality Control Region.

The Parkersburg (West Virginia)-Marietta (Ohio) Interstate Air Quality Control Region consists of the territorial area encompassed by the boundaries of the following jurisdictions or described area (including the territorial area of all municipalities (as defined in section 302(f) of the Clean Air Act, 42 U.S.C. 1857h(f) geographically located within the outermost boundaries of the area so delimited):

In the State of West Virginia: Jackson County, Pleasants County, Tyler County, Wetzel County, Wood County.

In the State of Ohio: Athens County, Meigs County, Morgan County, Washington County.

§81.71 Rockford (Illinois)-Janesville-Beloit (Wisconsin) Interstate Air Quality Control Region.

The Rockford (Illinois)-Janesville-Beloit (Wisconsin) Interstate Air Quality Control Region consists of the territorial area encompassed by the boundaries of the following jurisdictions or described area (including the territorial area of all municipalities (as defined in section 302(f) of the Clean Air Act, 42 U.S.C. 1857h(f)) geographically located within the outermost boundaries of the area so delimited):

In the State of Illinois: Boone County, De Kalb County, Ogle County, Stephenson County, Winnebago County.

In the State of Wisconsin: Rock County.

§81.72 Tennessee River Valley (Alabama)-Cumberland Mountains (Tennessee) Interstate Air Quality Control Region.

The Scottsboro (Alabama)-Jasper (Tennessee) Interstate Air Quality Control Region has been renamed the Tennessee River Valley (Alabama)-Cumberland Mountains (Tennessee) Interstate Air Quality Control Region and revised to consist of the territorial area encompassed by the boundaries of the following jurisdictions or described area (including the territorial area of all municipalities (as defined in section 302(f) of the Clean Air Act, 42 U.S.C. 1875h(f)) geographically located within the outermost boundaries of the area so delimited):

In the State of Alabama: Colbert County, Cullman County, De Kalb County, Franklin County, Jackson County, Lauderdale County, Lawrence County, Limestone County, Madison County, Marion County, Marshall County, Morgan County, Winston County.

In the State of Tennessee: Bledsoe County, Coffee County, Cumberland County, Fentress County, Franklin County, Grundy County, Marion County, Morgan County, Overton County, Pickett County, Putnam County, Scott County, Sequatchie County, Warren County, White County, Van Buren County.

§81.73 South Bend-Elkhart (Indiana)-Benton Harbor (Michigan) Interstate Air Quality Control Region.

The South Bend-Elkhart (Indiana)-Benton Harbor (Michigan) Interstate Air Quality Control Region consists of the territorial area encompassed by the boundaries of the following jurisdictions or described area (including the territorial area of all municipalities (as defined in section 302(f) of the Clean Air Act, 42 U.S.C. 1857h(f)) geographically located within the outermost boundaries of the area so delimited):

In the State of Indiana: Elkhart County, Kosciusko County, La Porte County, Marshall County, St. Joseph County.

In the State of Michigan: Berrien County, Cass County, Van Buren County.

§81.74 Northwest Pennsylvania-Youngstown Interstate Air Quality Control Region.

The Northwest Pennsylvania-Youngstown Interstate Air Quality Control Region (Pennsylvania-Ohio) is

redesignated to consist of the territorial area encompassed by the boundaries of the following jurisdictions or described area (including the territorial area of all municipalities (as defined in section 302(f) of the Clean Air Act, 42 U.S.C. 1857h(f)) geographically located within the outermost boundaries of the area so delimited):

In the State of Ohio: Ashtabula County, Mahoning County, Trumbull County.

In the State of Pennsylvania: Cameron County, Clarion County, Clearfield County, Crawford County, Elk County, Erie County, Forest County, Jefferson County, Lawrence County, McKean County, Mercer County, Potter County, Venango County, Warren County.

§ 81.75 Metropolitan Charlotte Interstate Air Quality Control Region.

The Metropolitan Charlotte Interstate Air Quality Control Region (North Carolina-South Carolina) has been revised to consist of the territorial area encompassed by the boundaries of the following jurisdictions (including the territorial area of all municipalities (as defined in section 302(f) of the Clean Air Act, 42 U.S.C. 1857h(f)) geographically located within the outermost boundaries of the area so delimited):

In the State of North Carolina: Cabarrus County, Gaston County, Iredell County, Lincoln County, Mecklenburg County, Rowan County, Stanly County, Union County.

In the State of South Carolina: Chester County, Lancaster County, Union County, York County.

§ 81.76 State of Hawaii Air Quality Control Region.

The State of Hawaii Air Quality Control Region consists of the territorial area encompassed by the outermost boundaries of the State of Hawaii (including the territorial area of all municipalities (as defined in section 302(f) of the Clean Air Act, 42 U.S.C. 1857h(f)) geographically located within the outermost boundaries of the area so delimited).

§ 81.77 Puerto Rico Air Quality Control Region.

The Puerto Rico Air Quality Control Region consists of the territorial area encompassed by the boundaries of the following jurisdictions or described area (including the territorial area of all municipalities (as defined in section 302(f) of the Clean Air Act, 42 U.S.C. 1857h(f)) geographically located within the outermost boundaries of the area so delimited):

The entire Commonwealth of Puerto Rico: Puerto Rico and surrounding islands, Vieques and surrounding islands, Culebra and surrounding islands.

§ 81.78 Metropolitan Portland Intrastate Air Quality Control Region.

The Metropolitan Portland Intrastate Air Quality Control Region (Maine) consists of the territorial area encompassed by the boundaries of the following jurisdictions or described area (including the territorial area of all municipalities (as defined in section 302(f) of the Clean Air Act, 42 U.S.C. 1857h(f)) geographically located within the outermost boundaries of the area so delimited):

In the State of Maine: COUNTIES—Cumberland, Sagadahoc, York.

TOWNS—Brownfield, Denmark, Fryeburg, Hiram, Porter.

§ 81.79 Northeastern Oklahoma Intrastate Air Quality Control Region.

The Metropolitan Tulsa Intrastate Air Quality Control Region has been renamed the Northeastern Oklahoma Intrastate Air Quality Control Region and revised to consist of the territorial area encompassed by the boundaries of the following jurisdictions or described area (including the territorial area of all municipalities (as defined in section 302(f) of the Clean Air Act, 42 U.S.C. 1857h(f)) geographically located within the outermost boundaries of the area so delimited):

In the State of Oklahoma: Craig County, Creek County, Delaware County, Mayes County, Muskogee County, Nowata County, Okmulgee County, Osage County, Ottawa County, Pawnee County, Rogers County, Tulsa County, Wagoner County, Washington County.

§ 81.80 Las Vegas Intrastate Air Quality Control Region.

The Las Vegas Intrastate Air Quality Control Region (Nevada) has been revised to consist of the territorial area encompassed by the boundaries of the following jurisdiction or described area

(including the territorial area of all municipalities (as defined in section 302(f) of the Clean Air Act, 42 U.S.C. 7602(f)) geographically located within the outermost boundaries of the area so delimited):

In the State of Nevada: Clark County.

[45 FR 7545, Feb. 4, 1980]

§ 81.81 Merrimack Valley-Southern New Hampshire Interstate Air Quality Control Region.

The Merrimack Valley Southern New Hampshire Interstate Air Quality Control Region (Massachusetts-New Hampshire) consists of the territorial area encompassed by the boundaries of the following jurisdictions or described area (including the territorial area of all municipalities (as defined in section 302(f) of the Clean Air Act, 42 U.S.C. 1857h(f)) geographically located within the outermost boundaries of the area so delimited):

In the State of Massachusetts: In Essex County, the towns of—Andover, Amesbury, Boxford, Georgetown, Groveland, Haverhill, Lawrence, Merrimac, Methuen, Newbury, Newburyport, North Andover, Rowley, Salisbury, West Newbury.

In Middlesex County, the towns of—Ayer, Billerica, Carlisle, Chelmsford, Dracut, Dunstable, Groton, Littleton, Lowell, Pepperell, Tewksbury, Tyngsborough, Westford.

In the State of New Hampshire: The counties of—Belknap, Cheshire, Hillsborough, Merrimack, Rockingham, Strafford, Sullivan.

§ 81.82 El Paso-Las Cruces-Alamogordo Interstate Air Quality Control Region.

The El Paso-Las Cruces-Alamogordo Interstate Air Quality Control Region (New Mexico-Texas) is revised to consist of the territorial area encompassed by the boundaries of the following jurisdictions or described area (including the territorial area of all municipalities (as defined in section 302(f) of the Clean Air Act, 42 U.S.C. 1857h(f)) geographically located within the outermost boundaries of the area so delimited):

In the State of Texas: Brewster County, Culberson County, El Paso County, Hudspeth County, Jeff Davis County, Presidio County.

In the State of New Mexico: Dona Ana County, Lincoln County, Otero County, Sierra County.

§ 81.83 Albuquerque-Mid Rio Grande Intrastate Air Quality Control Region.

The Albuquerque-Mid Rio Grande Intrastate Air Quality Control Region (New Mexico) is revised to consist of the territorial area encompassed by the boundaries of the following jurisdictions or described area (including the territorial area of all municipalities (as defined in section 302(f) of the Clean Air Act, 42 U.S.C. 1857h(f)) geographically located within the outermost boundaries of the area so delimited):

In the State of New Mexico: Bernalillo County.

Those portions of Sandoval County lying east of the Continental Divide:

Those portions of Valencia County lying east of a line described as follows: Starting at the point at which the south boundary of Bernalillo County intersects with the section line between secs. 1 and 2 T. 7 N., R. 2 W.; thence south to the southern boundary of the Laguna Indian Reservation between secs. 35 and 36 T. 7 N., R. 2 W.; then southerly on section lines to the Socorro-Valencia County line at secs. 11, 12, 13, and 14, T. 5 N., R. 2 W.

§ 81.84 Metropolitan Fargo-Moorhead Interstate Air Quality Control Region.

The Metropolitan Fargo-Moorhead Interstate Air Quality Control Region (North Dakota-Minnesota) consists of the territorial area encompassed by the boundaries of the following jurisdictions or described area (including the territorial area of all municipalities (as defined in section 302(f) of the Clean Air Act, 42 U.S.C. 1857h(f)) geographically located within the outermost boundaries of the area so delimited):

In the State of North Dakota: Cass County.

In the State of Minnesota: Clay County.

§ 81.85 Metropolitan Sioux Falls Interstate Air Quality Control Region.

The Metropolitan Sioux Falls Interstate Air Quality Control Region (Iowa-South Dakota) has been revised to consist of the territorial area encompassed by the boundaries of the following jurisdictions or described area (including the territorial area of all municipalities (as defined in section

302(f) of the Clean Air Act, 42 U.S.C. 1857h(f)) geographically located within the outermost boundaries of the area so delimited):

In the State of Iowa: Lyon County.

In the State of South Dakota: Lincoln County, McCook County, Minnehaha County, Turner County.

NOTE: For purposes of identification, this Region is referred to by Minnesota authorities as follows:

Sec.
481.60 Duluth (Minnesota)-Superior (Wisconsin) Interstate Air Quality Control Region: Northeast Minnesota Region.

For purposes of identification, these Regions are referred to by Wisconsin authorities as follows:

481.60 Duluth (Minnesota)-Superior (Wisconsin) Interstate Air Quality Control Region: Northwestern Wisconsin Region.
481.66 Southeast Minnesota-La Crosse (Wisconsin) Interstate Air Quality Control Region: West Central Wisconsin Region.

§ 81.86 Metropolitan Sioux City Interstate Air Quality Control Region.

The Metropolitan Sioux City Interstate Air Quality Control Region (Iowa-Nebraska-South Dakota) consists of the territorial area encompassed by the boundaries of the following jurisdictions or described area (including the territorial area of all municipalities (as defined in section 302(f) of the Clean Air Act, 42, U.S.C. 1857h(f)) geographically located within the outermost boundaries of the area so delimited):

In the State of Iowa: Plymouth County, Sioux County, Woodbury County.

In the State of Nebraska: Dakota County.

In the State of South Dakota: Union County.

§ 81.87 Metropolitan Boise Intrastate Air Quality Control Region.

The Metropolitan Boise Intrastate Air Quality Control Region (Idaho) consists of the territorial area encompassed by the boundaries of the following jurisdictions or described area (including the territorial area of all municipalities (as defined in section 302(f) of the Clean Air Act, 42 U.S.C. 1857h(f)) geographically located within the outermost boundaries of the area so delimited):

In the State of Idaho: Ada County, Canyon County.

§ 81.88 Billings Intrastate Air Quality Control Region.

The Metropolitan Billings Intrastate Air Quality Control Region (Montana) has been renamed the Billings Intrastate Air Quality Control Region and consists of the territorial area encompassed by the boundaries of the following jurisdictions or described area (including the territorial area of all municipalities (as defined in section 302(f) of the Clean Air Act, 42 U.S.C. 1857h(f)) geographically located within the outermost boundaries of the area so delimited):

In the State of Montana: Big Horn County, Carbon County, Fergus County, Golden Valley County, Judith Basin County, Musselshell County, Petroleum County, Stillwater County, Sweet Grass County, Wheatland County, Yellowstone County.

(Sec. 301(a), 81 Stat. 490, 504; 42 U.S.C. 1857g(a) as amended by sec. 15(c)(2) of Pub. L. 91–604)

NOTE: For purposes of identification, the Regions are referred to by Montana authorities as follows:

Sec.
481.168 Great Falls Intrastate Air Quality Control Region: Region II.
481.169 Helena Intrastate Air Quality Control Region: Region IV.
481.170 Miles City Intrastate Air Quality Control Region: Region III.
481.171 Missoula Intrastate Air Quality Control Region: Region I.
481.88 Billings Intrastate Air Quality Control Region: Region V.

§ 81.89 Metropolitan Cheyenne Intrastate Air Quality Control Region.

The Metropolitan Cheyenne Intrastate Air Quality Control Region (Wyoming) consists of the territorial area encompassed by the boundaries of the following jurisdictions or described area (including the territorial area of all municipalities (as defined in section 302(f) of the Clean Air Act, 42 U.S.C. 1857h(f)) geographically located within the outermost boundaries of the area so delimited):

In the State of Wyoming: Albany County, Goshen County, Laramie County, Platte County.

§ 81.90 Androscoggin Valley Interstate Air Quality Control Region.

The Androscoggin Valley Interstate Air Quality Control Region (Maine-

New Hampshire) consists of the territorial area encompassed by the boundaries of the following jurisdictions or described area (including the territorial area of all municipalities (as defined in section 302(f) of the Clean Air Act, 42 U.S.C. 1857h(f)) geographically located within the outermost boundaries of the areas so delimited):

In the State of Maine: Androscoggin County, Kennebec County, Knox County, Lincoln County, Waldo County.

In the County of Franklin: Avon Town, Carthage Town, Chesterville Town, Farmington Town, Freeman Township, Industry Town, Jay Town, New Sharron Town, New Vineyard Town, Perkins Township, Phillips Town, Salem Township, Strong Town, Temple Town, Township No. 6, Washington Township, Weld Town, Wilton Town.

In the County of Oxford: Albany Township, Andover Town, Andover North Surplus, Andover West Surplus, Batchelders Grant, Bethel Town, Buckfield Town, Byron Town, Canton Town, Dixfield Town, Gilead Town, Grafton Township, Greenwood Town, Hanover Town, Hartford Town, Hebron Town, Lovell Town, Mason Township, Mexico Town, Milton Township, Newry Town, Norway Town, Oxford Town, Paris Town, Peru Town, Riley Township, Roxbury Town, Rumford Town, Stoneham Town, Stow Town, Sumner Town, Sweden Town, Waterford Town, West Paris Town, Woodstock Town.

Somerset County—That portion of Somerset County which lies south and east of a line described as follows: Beginning at the point where the Somerset-Franklin County boundary is intersected by a line common to the northern boundary of New Portland Township and running northeast along the northern boundaries of New Portland, Embden, Solon, and Athens Townships to the intersection of said line with the Somerset-Piscataquis County boundary, which is also common to the northeast corner of Athens Township.

In the State of New Hampshire: Cass County.

§ 81.91 Jacksonville (Florida)-Brunswick (Georgia) Interstate Air Quality Control Region.

The Jacksonville (Florida)-Brunswick (Georgia) Interstate Air Quality Control Region has been revised to consist of the territorial area encompassed by the boundaries of the following jurisdictions or described area (including the territorial area of all municipalities (as defined in section 302(f) of the Clean Air Act, 42 U.S.C. 1857h(f)) geographically located within the outermost boundaries of the area so delimited):

In the State of Florida: Alachua County, Baker County, Bradford County, Clay County, Columbia County, Dixie County, Duval County, Flagler County, Franklin County, Gadsden County, Gilchrist County, Hamilton County, Jefferson County, Lafayette County, Leon County, Liberty County, Madison County, Marion County, Nassau County, Putnam County, St. Johns County, Suwannee County, Taylor County, Union County, Wakulla County.

In the State of Georgia: Appling County, Atkinson County, Bacon County, Brantley County, Camden County, Charlton County, Clinch County, Coffee County, Glynn County, Long County, McIntosh County, Pierce County, Ware County, Wayne County.

§ 81.92 Monroe (Louisiana)—El Dorado (Arkansas) Interstate Air Quality Control Region.

The Monroe (Louisiana)—El Dorado (Arkansas) Interstate Air Quality Control Region consists of the territorial area encompassed by the boundaries of the following jurisdictions or described area (including the territorial area of all municipalities (as defined in section 302(f) of the Clean Air Act, 42 U.S.C. 1857h(f)) geographically located within the outermost boundaries of the area so delimited):

In the State of Louisiana: Caldwell Parish, Catahoula Parish, Concordia Parish, East Carroll Parish, Franklin Parish, Grant Parish, La Salle Parish, Madison Parish, Morehouse Parish, Ouachita Parish, Richland Parish, Tensas Parish, Union Parish, West Carroll Parish.

In the State of Arkansas: Ashley County, Bradley County, Calhoun County, Nevada County, Ouachita County, Union County.

[36 FR 22421, Nov. 25, 1971, as amended at 67 FR 57335, Sept. 10, 2002]

§ 81.93 Hampton Roads Intrastate Air Quality Control Region.

The Metropolitan Norfolk Intrastate Air Quality Control Region (Virginia) consists of the territorial area encompassed by the boundaries of the following jurisdictions or described area (including the territorial area of all municipalities (as defined in section 302(f) of the Clean Air Act, 42 U.S.C. 1857h(f)) geographically located within the outermost boundaries of the area so delimited):

In the State of Virginia:

COUNTIES—Isle of Wight, James City, Nansemond, Southampton, York.

CITIES—Chesapeake, Franklin, Hampton, Newport News, Norfolk, Portsmouth, Suffolk, Virginia Beach, Williamsburg.

§ 81.94 Shreveport-Texarkana-Tyler Interstate Air Quality Control Region.

The Shreveport-Texarkana-Tyler Interstate Air Quality Control Region (Arkansas-Louisiana-Oklahoma-Texas) consists of the territorial area encompassed by the boundaries of the following jurisdictions or described area (including the territorial area of all municipalities (as defined in section 302(f) of the Clean Air Act, 42 U.S.C. 1857h(f)) geographically located within the outermost boundaries of the area so delimited):

In the State of Arkansas: Columbia County, Hempstead County, Howard County, Lafayette County, Little River County, Miller County, Sevier County.

In the State of Louisiana: Avoyelles Parish, Bienville Parish, Bossier Parish, Caddo Parish, Claiborne Parish, De Soto Parish, Jackson Parish, Lincoln Parish, Natchitoches Parish, Rapides Parish, Red River Parish, Sabine Parish, Vernon Parish, Webster Parish, Winn Parish.

In the State of Oklahoma: McCurtain County.

In the State of Texas: Anderson County, Bowie County, Camp County, Cass County, Cherokee County, Delta County, Franklin County, Gregg County, Harrison County, Henderson County, Hopkins County, Lamar County, Marion County, Morris County, Panola County, Rains County, Red River County, Rusk County, Smith County, Titus County, Upshur County, Van Zandt County, Wood County.

[36 FR 22421, Nov. 25, 1971, as amended at 67 FR 57335, Sept. 10, 2002]

§ 81.95 Central Florida Intrastate Air Quality Control Region.

The Central Florida Intrastate Air Quality Control Region consists of the territorial area encompassed by the boundaries of the following jurisdictions or described area (including the territorial area of all municipalities (as defined in section 302(f) of the Clean Air Act, 42 U.S.C. 1857h(f)) geographically located within the outermost boundaries of the area so delimited):

In the State of Florida: Brevard County, Lake County, Orange County, Osceola County, Seminole County, Volusia County.

§ 81.96 West Central Florida Intrastate Air Quality Control Region.

The West Central Florida Intrastate Air Quality Control Region consists of the territorial area encompassed by the boundaries of the following jurisdictions or described area (including the territorial area of all municipalities (as defined in section 302(f) of the Clean Air Act, 42 U.S.C. 1857h(f)) geographically located within the outermost boundaries of the area so delimited):

In the State of Florida: Citrus County, Hardee County, Hernando County, Hillsborough County, Levy County, Manatee County, Pasco County, Pinellas County, Polk County, Sumter County.

§ 81.97 Southwest Florida Intrastate Air Quality Control Region.

The Southwest Florida Intrastate Air Quality Control Region consists of the territorial area encompassed by the boundaries of the following jurisdictions or described area (including the territorial area of all municipalities (as defined in section 302(f) of the Clean Air Act, 42 U.S.C. 1857h(f)) geographically located within the outermost boundaries of the area so delimited):

In the State of Florida: Charlotte County, Collier County, De Soto County, Glades County, Hendry County, Highlands County, Lee County, Sarasota County.

§ 81.98 Burlington-Keokuk Interstate Air Quality Control Region.

The Burlington-Keokuk Interstate Air Quality Control Region (Illinois-Iowa) is revised to consist of the territorial area encompassed by the boundaries of the following jurisdictions or described area (including the territorial area of all municipalities (as defined in section 302(f) of the Clean Air Act, 42 U.S.C. 1857h(f)) geographically located within the outermost boundaries of the area so delimited):

In the State of Illinois: Fulton County, Hancock County, Henderson County, Knox County, McDonough County, Mason County, Peoria County, Tazewell County, Warren County, Woodford County.

In the State of Iowa: Des Moines County, Lee County.

NOTE: For purposes of identification, the regions are referred to by Illinois authorities as follows:

Sec.
481.14 Metropolitan Chicago Interstate Air Quality Control Region: Region III.
481.262 North Central Illinois Intrastate Air Quality Control Region: Region V.
481.98 Burlington-Keokuk Interstate Air Quality Control Region: Region VI.
481.263 East Central Illinois Intrastate Air Quality Control Region: Region VII.
481.264 West Central Illinois Intrastate Air Quality Control Region: Region VIII.
481.18 Metropolitan St. Louis Interstate Air Quality Control Region: Region IX.
481.265 Southeast Illinois Intrastate Air Quality Control Region: Region X.
481.69 Paducah-Cairo Interstate Air Quality Control Region: Region XI.

§ 81.99 New Mexico Southern Border Intrastate Air Quality Control Region.

The Arizona-New Mexico Southern Border Interstate Air Quality Control Region has been renamed the New Mexico Southern Border Intrastate Air Quality Control Region and has been revised to consist of the territorial area encompassed by the boundaries of the following jurisdictions or described area (including the territorial area of all municipalities (as defined in section 302(f) of the Clean Air Act, 42 U.S.C. 1857h(f)) geographically located within the outermost boundaries of the area so delimited):

In the State of New Mexico: Grant County, Hidalgo County, Luna County.

[45 FR 67347, Oct. 10, 1980]

§ 81.100 Eastern Washington-Northern Idaho Interstate Air Quality Control Region.

The Eastern Washington-Northern Idaho Interstate Air Quality Control Region consists of the territorial area encompassed by the boundaries of the following jurisdictions or described area (including the territorial area of all municipalities (as defined in section 302(f) of the Clean Air Act, 42 U.S.C. 1857h(f)) geographically located within the outermost boundaries of the area so delimited):

In the State of Idaho: Benewah County, Kootenai County, Latah County, Nez Perce County, Shoshone County.

In the State of Washington: Adams County, Asotin County, Columbia County, Garfield County, Grant County, Lincoln County, Spokane County, Whitman County.

§ 81.101 Metropolitan Dubuque Interstate Air Quality Control Region.

The Metropolitan Dubuque Interstate Air Quality Control Region (Illinois-Iowa-Wisconsin) consists of the territorial area encompassed by the boundaries of the following jurisdictions or described area (including the territorial area of all municipalities (as defined in section 302(f) of the Clean Air Act, 42 U.S.C. 1857h(f)) geographically located within the outermost boundaries of the area so delimited):

In the State of Illinois: Jo Daviess County.

In the State of Iowa: Clayton County, Dubuque County, Jackson County.

In the State of Wisconsin: Grant County.

§ 81.102 Metropolitan Quad Cities Interstate Air Quality Control Region.

The Metropolitan Quad Cities Interstate Air Quality Control Region (Illinois-Iowa) consists of the territorial area encompassed by the boundaries of the following jurisdictions or described area (including the territorial area of all municipalities (as defined in section 302(f) of the Clean Air Act, 42 U.S.C. 1857h(f)) geographically located within the outermost boundaries of the area so delimited):

In the State of Illinois: Carroll County, Henry County, Mercer County, Rock Island County, Whiteside County.

In the State of Iowa: Clinton County, Louisa County, Muscatine County, Scott County.

§ 81.104 Central Pennsylvania Intrastate Air Quality Control Region.

The Central Pennsylvania Intrastate Air Quality Control Region consists of the territorial area encompassed by the boundaries of the following jurisdictions or described area (including the territorial area of all municipalities (as defined in section 302(f) of the Clean Air Act, 42 U.S.C. 1857h(f)) geographically located within the outermost boundaries of the area so delimited):

In the State of Pennsylvania: Bedford County, Blair County, Cambria County, Centre County, Clinton County, Columbia County, Fulton County, Huntingdon County, Juniata County, Lycoming County, Mifflin County, Montour County, Northumberland

County, Snyder County, Somerset County, Union County.

§ 81.105 South Central Pennsylvania Intrastate Air Quality Control Region.

The South Central Pennsylvania Intrastate Air Quality Control Region consists of the territorial area encompassed by the boundaries of the following jurisdictions or described area (including the territorial area of all municipalities (as defined in section 302(f) of the Clean Air Act, 42 U.S.C. 1857h(f) geographically located within the outermost boundaries of the area so delimited):

In the State of Pennsylvania: Adams County, Cumberland County, Dauphin County, Franklin County, Lancaster County, Lebanon County, Perry County, York County.

§ 81.106 Greenville-Spartanburg Intrastate Air Quality Control Region.

The Greenville-Spartanburg Intrastate Air Quality Control Region (South Carolina) consists of the territorial area encompassed by the boundaries of the following jurisdictions or described area (including the territorial area of all municipalities (as defined in section 302(f) of the Clean Air Act, 42 U.S.C. 1857h(f)) geographically located within the outermost boundaries of the area so delimited):

In the State of South Carolina: Anderson County, Cherokee County, Greenville County, Oconee County, Pickens County, Spartanburg County.

§ 81.107 Greenwood Intrastate Air Quality Control Region.

The Greenwood Intrastate Air Quality Control Region (South Carolina) consists of the territorial area encompassed by the boundaries of the following jurisdictions or described area (including the territorial area of all municipalities (as defined in section 302(f) of the Clean Air Act, 42 U.S.C. 1857h(f)) geographically located within the outermost boundaries of the area so delimited):

In the State of South Carolina: Abbeville County, Edgefield County, Greenwood County, Laurens County, McCormick County, Saluda County.

§ 81.108 Columbia Intrastate Air Quality Control Region.

The Columbia Intrastate Air Quality Control Region (South Carolina) consists of the territorial area encompassed by the boundaries of the following jurisdictions or described area (including the territorial area of all municipalities (as defined in section 302(f) of the Clean Air Act, 42 U.S.C. 1857h(f)) geographically located within the outermost boundaries of the area so delimited):

In the State of South Carolina: Fairfield County, Lexington County, Newberry County, Richland County.

§ 81.109 Florence Intrastate Air Quality Control Region.

The Florence Intrastate Air Quality Control Region (South Carolina) consists of the territorial area encompassed by the boundaries of the following jurisdictions or described area (including the territorial area of all municipalities (as defined in section 302(f) of the Clean Air Act, 42 U.S.C. 1857h(f)) geographically located within the outermost boundaries of the area so delimited):

In the State of South Carolina: Chesterfield County, Darlington County, Dillon County, Florence County, Marion County, Marlboro County.

§ 81.110 Camden-Sumter Intrastate Air Quality Control Region.

The Camden-Sumter Intrastate Air Quality Control Region (South Carolina) consists of the territorial area encompassed by the boundaries of the following jurisdictions or described area (including the territorial area of all municipalities (as defined in section 302(f) of the Clean Air Act, 42 U.S.C. 1857h(f)) geographically located within the outermost boundaries of the area so delimited):

In the State of South Carolina: Clarendon County, Kershaw County, Lee County, Sumter County.

§ 81.111 Georgetown Intrastate Air Quality Control Region.

The Georgetown Intrastate Air Quality Control Region (South Carolina)

consists of the territorial area encompassed by the boundaries of the following jurisdictions or described area (including the territorial area of all municipalities (as defined in section 302(f) of the Clean Air Act, 42 U.S.C. 1857h(f)) geographically located within the outermost boundaries of the area so delimited):

In the State of South Carolina: Georgetown County, Horry County, Williamsburg County.

§ 81.112 Charleston Intrastate Air Quality Control Region.

The Charleston Intrastate Air Quality Control Region (South Carolina) consists of the territorial area encompassed by the boundaries of the following jurisdictions or described area (including the territorial area of all municipalities (as defined in section 302(f) of the Clean Air Act, 42 U.S.C. 1857h(f)) geographically located within the outermost boundaries of the area so delimited):

In the State of South Carolina: Berkeley County, Charleston County, Dorchester County.

NOTE: For purposes of identification, the regions are referred to by South Carolina authorities as follows:

Sec.
81.106 Greenville-Spartanburg Intrastate Air Quality Control Region: Region 1.
81.107 Greenwood Intrastate Air Quality Control Region: Region 2.
81.108 Columbia Intrastate Air Quality Control Region: Region 4.
81.109 Florence Intrastate Air Quality Control Region: Region 7.
81.110 Camden-Sumter Intrastate Air Quality Control Region: Region 6.
81.111 Georgetown Intrastate Air Quality Control Region: Region 8.
81.112 Charleston Intrastate Air Quality Control Region: Region 9.

§ 81.113 Savannah (Georgia)-Beaufort (South Carolina) Interstate Air Quality Control Region.

The Savannah (Georgia)-Beaufort (South Carolina) Interstate Air Quality Control Region has been revised to consist of the territorial area encompassed by the boundaries of the following jurisdictions or described area (including the territorial area of all municipalities (as defined in section 302(f) of the Clean Air Act, 42 U.S.C. 1857h(f)) geographically located within the outermost boundaries of the area so delimited):

In the State of South Carolina: Beaufort County, Colleton County, Hampton County, Jasper County.

In the State of Georgia: Bryan County, Bulloch County, Candler County, Chatham County, Effingham County, Evans County, Liberty County, Tattnall County.

§ 81.114 Augusta (Georgia)-Aiken (South Carolina) Interstate Air Quality Control Region.

The Augusta (Georgia)-Aiken (South Carolina) Interstate Air Quality Control Region has been revised to consist of the territorial area encompassed by the boundaries of the following jurisdictions or described area (including the territorial area of all municipalities (as defined in section 302(f) of the Clean Air Act, 42 U.S.C. 1857h(f)) geographically located within the outermost boundaries of the area so delimited):

In the State of Georgia: Burke County, Columbia County, Emanuel County, Glascock County, Jefferson County, Jenkins County, Lincoln County, McDuffle County, Richmond County, Screven County, Taliaferro County, Warren County, Wilkes County.

In the State of South Carolina: Aiken County, Allendale County, Bamberg County, Barnwell County, Calhoun County, Orangeburg County.

NOTE: For identification purposes, the Columbus (Georgia)-Phenix City (Alabama) Interstate Air Quality Control Region is referred to by Alabama authorities as the Alabama State Capital-Columbus (Georgia) Interstate Air Quality Control Region.

§ 81.115 Northwest Nevada Intrastate Air Quality Control Region.

The Northwest Nevada Intrastate Air Quality Control Region consists of the territorial area encompassed by the boundaries of the following jurisdictions or described area (including the territorial area of all municipalities (as defined in section 302(f) of the Clean Air Act, 42 U.S.C. 1857h(f)) geographically located within the outermost boundaries of the area so delimited):

In the State of Nevada: Carson City, Douglas County, Lyon County, Storey County, Washoe County.

§ 81.116 Northern Missouri Intrastate Air Quality Control Region.

The Northern Missouri Intrastate Air Quality Control Region consists of the territorial area encompassed by the boundaries of the following jurisdictions or described area (including the territorial area of all municipalities (as defined in section 302(f) of the Clean Air Act, 42 U.S.C. 1857h(f)) geographically located within the outermost boundaries of the area so delimited):

In the State of Missouri: Adair County, Andrew County, Atchison County, Audrain County, Boone County, Caldwell County, Callaway County, Carroll County, Chariton County, Clark County, Clinton County, Cole County, Cooper County, Daviess County, De Kalb County, Gentry County, Grundy County, Harrison County, Holt County, Howard County, Knox County, Lewis County, Lincoln County, Linn County, Livingston County, Macon County, Marion County, Mercer County, Moniteau County, Monroe County, Montgomery County, Nodaway County, Osage County, Pike County, Putnam County, Ralls County, Randolph County, Saline County, Schuyler County, Scotland County, Shelby County, Sullivan County, Warren County, Worth County.

§ 81.117 Southeast Missouri Intrastate Air Quality Control Region.

The Southeast Missouri Intrastate Air Quality Control Region consists of the territorial area encompassed by the boundaries of the following jurisdictions or described area (including the territorial area of all municipalities (as defined in section 302(f) of the Clean Air Act, 42 U.S.C. 1857h(f)) geographically located within the outermost boundaries of the area so delimited):

In the State of Missouri: Bolinger County, Butler County, Cape Girardeau County, Carter County, Crawford County, Dent County, Dunklin County, Gasconade County, Iron County, Madison County, Maries County, Mississippi County, New Madrid County, Pemiscot County, Perry County, Phelps County, Reynolds County, Ripley County, St. Francois County, Ste. Genevieve County, Scott County, Stoddard County, Washington County, Wayne County.

§ 81.118 Southwest Missouri Intrastate Air Quality Control Region.

The Southwest Missouri Intrastate Air Quality Control Region consists of the territorial area encompassed by the boundaries of the following jurisdictions or described area (including the territorial area of all municipalities (as defined in section 302(f) of the Clean Air Act, 42 U.S.C. 1857h(f)) geographically located within the outermost boundaries of the area so delimited):

In the State of Missouri: Barton County, Barry County, Bates County, Benton County, Camden County, Cedar County, Christian County, Dade County, Dallas County, Douglas County, Greene County, Henry County, Hickory County, Howell County, Jasper County, Johnson County, Laclede County, Lafayette County, Lawrence County, McDonald County, Miller County, Morgan County, Newton County, Oregon County, Ozark County, Pettis County, Polk County, Pulaski County, St. Clair County, Shannon County, Stone County, Taney County, Texas County, Vernon County, Webster County, Wright County.

§ 81.119 Western Tennessee Intrastate Air Quality Control Region.

The Western Tennessee Intrastate Air Quality Control Region consists of the territorial area encompassed by the boundaries of the following jurisdictions or described area (including the territorial area of all municipalities (as defined in section 302(f) of the Clean Air Act, 42 U.S.C. 1857h(f)) geographically located within the outermost boundaries of the area so delimited):

In the State of Tennessee: Benton County, Carroll County, Chester County, Crockett County, Decatur County, Dyer County, Fayette County, Gibson County, Hardeman County, Hardin County, Haywood County, Henderson County, Henry County, Lake County, Lauderdale County, McNairy County, Madison County, Obion County, Tipton County, Weakley County.

§ 81.120 Middle Tennessee Intrastate Air Quality Control Region.

The Middle Tennessee Intrastate Air Quality Control Region consists of the territorial area encompassed by the boundaries of the following jurisdictions or described area (including the territorial area of all municipalities (as defined in section 302(f) of the Clean Air Act, 42 U.S.C. 1857h(f)) geographically located within the outermost boundaries of the area so delimited):

In the State of Tennessee: Bedford County, Cannon County, Cheatham County, Clay County, Davidson County, DeKalb County, Dickson County, Giles County, Hickman

County, Houston County, Humphreys County, Jackson County, Lawrence County, Lewis County, Lincoln County, Macon County, Marshall County, Maury County, Montgomery County, Moore County, Perry County, Robertson County, Rutherford County, Smith County, Stewart County, Sumner County, Trousdale County, Wayne County, Williamson County, Wilson County.

§ 81.121 Four Corners Interstate Air Quality Control Region.

The Four Corners Interstate Air Quality Control Region (Colorado-New Mexico-Utah) has been revised to consist of the territorial area encompassed by the boundaries of the following jurisdictions or described area (including the territorial area of all municipalities (as defined in section 302(f) of the Clean Air Act, 42 U.S.C. 1857h(f)) geographically located within the outermost boundaries of the area so delimited):

In the State of Colorado: Archuleta County, Dolores County, La Plata County, Montezuma County, San Juan County.

In the State of New Mexico: San Juan County (in its entirety); Rio Arriba County (that portion lying west (Pacific slope) of the Continental Divide, and all portions of the Jicarilla Apache Indian Reservation lying east (Atlantic slope) of the Continental Divide); Sandoval County (that portion lying west (Pacific slope) of the Continental Divide, and all portions of the Jicarilla Apache Indian Reservation lying east (Atlantic slope) of the Continental Divide); McKinley County (that portion lying west (Pacific slope) of the Continental Divide); Valencia County (that portion lying within the Zuni and Ramah Navajo Indian Reservations).

In the State of Utah: Emery County, Garfield County, Grand County, Iron County, Kane County, San Juan County, Washington County, Wayne County.

[45 FR 67347, Oct. 10, 1980]

§ 81.122 Mississippi Delta Intrastate Air Quality Control Region.

The Mississippi Delta Intrastate Air Quality Control Region consists of the territorial area encompassed by the boundaries of the following jurisdictions or described area (including the territorial area of all municipalities (as defined in section 302(f) of the Clean Air Act, 42 U.S.C. 1857h(f)) geographically located within the outermost boundaries of the area so delimited):

In the State of Mississippi: Bolivar County, Coahoma County, Humphreys County, Issaquena County, Leflore County, Quitman County, Sharkey County, Sunflower County, Tallahatchie County, Tunica County, Washington County, Yazoo County.

§ 81.123 Southeastern Oklahoma Intrastate Air Quality Control Region.

The Southeastern Oklahoma Intrastate Air Quality Control Region consists of the territorial area encompassed by the boundaries of the following jurisdictions or described area (including the territorial area of all municipalities (as defined in section 302(f) of the Clean Air Act, 42 U.S.C. 1857h(f)) geographically located within the outermost boundaries of the area so delimited):

In the State of Oklahoma: Atoka County, Bryan County, Carter County, Choctaw County, Coal County, Garvin County, Haskell County, Hughes County, Johnston County, Latimer County, Love County, McIntosh County, Marshall County, Murray County, Okfuskee County, Pittsburg County, Pontotoc County, Pushmataha County, Seminole County.

§ 81.124 North Central Oklahoma Intrastate Air Quality Control Region.

The North Central Oklahoma Intrastate Air Quality Control Region consists of the territorial area encompassed by the boundaries of the following jurisdictions or described area (including the territorial area of all municipalities (as defined in section 302(f) of the Clean Air Act, 42 U.S.C. 1857h(f)) geographically located within the outermost boundaries of the area so delimited):

In the State of Oklahoma: Garfield County, Grant County, Kay County, Noble County, Payne County.

§ 81.125 Southwestern Oklahoma Intrastate Air Quality Control Region.

The Southwestern Oklahoma Intrastate Air Quality Control Region consists of the territorial area encompassed by the boundaries of the following jurisdictions or described area (including the territorial area of all municipalities (as defined in section 302(f) of the Clean Air Act, 42 U.S.C. 1857h(f)) geographically located within

the outermost boundaries of the area so delimited):

In the State of Oklahoma: Beckham County, Caddo County, Comanche County, Cotton County, Greer County, Harmon County, Jackson County, Jefferson County, Kiowa County, Stephens County, Tillman County, Washita County.

§ 81.126 Northwestern Oklahoma Intrastate Air Quality Control Region.

The Northwestern Oklahoma Intrastate Air Quality Control Region consists of the territorial area encompassed by the boundaries of the following jurisdictions or described area (including the territorial area of all municipalities (as defined in section 302(f) of the Clean Air Act, 42 U.S.C. 1857h(f)) geographically located within the outermost boundaries of the area so delimited):

In the State of Oklahoma: Alfalfa County, Beaver County, Blaine County, Cimarron County, Custer County, Dewey County, Ellis County, Harper County, Major County, Roger Mills County, Texas County, Woods County, Woodward County.

§ 81.127 Central New York Intrastate Air Quality Control Region.

The Central New York Intrastate Air Quality Control Region consists of the territorial area encompassed by the boundaries of the following jurisdictions or described area (including the territorial area of all municipalities (as defined in section 302(f) of the Clean Air Act, 42 U.S.C. 1857h(f)) geographically located within the outermost boundaries of the area so delimited):

In the State of New York: Cayuga County, Cortland County, Herkimer County, Jefferson County, Lewis County, Madison County, Oneida County, Onondaga County, Oswego County.

§ 81.128 Genesee-Finger Lakes Intrastate Air Quality Control Region.

The Genesee-Finger Lakes Intrastate Air Quality Control Region (New York) consists of the territorial area encompassed by the boundaries of the following jurisdictions or described area (including the territorial area of all municipalities (as defined in section 302(f) of the Clean Air Act, 42 U.S.C. 1857h(f)) geographically located within the outermost boundaries of the area so delimited):

In the State of New York: Genesee County, Livingston County, Monroe County, Ontario County, Orleans County, Seneca County, Wayne County, Wyoming County, Yates County.

§ 81.129 Hudson Valley Intrastate Air Quality Control Region.

The Hudson Valley Intrastate Air Quality Control Region (New York) consists of the territorial area encompassed by the boundaries of the following jurisdictions or described area (including the territorial area of all municipalities (as defined in section 302(f) of the Clean Air Act, 42 U.S.C. 1857h(f)) geographically located within the outermost boundaries of the area so delimited):

In the State of New York: Albany County, Columbia County, Dutchess County, Fulton County, Greene County, Montgomery County, Orange County, Putnam County, Rensselaer County, Saratoga County, Schenectady County, Schoharie County, Ulster County.

§ 81.130 Southern Tier East Intrastate Air Quality Control Region.

The Southern Tier East Intrastate Air Quality Control Region (New York) consists of the territorial area encompassed by the boundaries of the following jurisdictions or described area (including the territorial area of all municipalities (as defined in section 302(f) of the Clean Air Act, 42 U.S.C. 1857h(f)) geographically located within the outermost boundaries of the area so delimited):

In the State of New York: Broome County, Chenango County, Delaware County, Otsego County, Sullivan County, Tioga County.

§ 81.131 Southern Tier West Intrastate Air Quality Control Region.

The Southern Tier West Intrastate Air Quality Control Region (New York) consists of the territorial area encompassed by the boundaries of the following jurisdictions or described area (including the territorial area of all municipalities (as defined in section 302(f) of the Clean Air Act, 42 U.S.C. 1857h(f)) geographically located within the outermost boundaries of the area so delimited):

In the State of New York: Allegany County, Cattaraugus County, Chautauqua County, Chemung County, Schuyler County, Steuben County, Tompkins County.

§ 81.132 Abilene-Wichita Falls Intrastate Air Quality Control Region.

The Abilene-Wichita Falls Intrastate Air Quality Control Region (Texas) consists of the territorial area encompassed by the boundaries of the following jurisdictions or described area (including the territorial area of all municipalities (as defined in section 302(f) of the Clean Air Act, 42 U.S.C. 1857h(f)) geographically located within the outermost boundaries of the area so delimited):

In the State of Texas: Archer County, Baylor County, Brown County, Callahan County, Clay County, Coleman County, Comanche County, Cottle County, Eastland County, Fisher County, Foard County, Hardeman County, Haskell County, Jack County, Jones County, Kent County, Knox County, Mitchell County, Montague County, Nolan County, Runnels County, Scurry County, Shackelford County, Stephens County, Stonewall County, Taylor County, Throckmorton County, Wichita County, Wilbarger County, Young County.

[36 FR 22421, Nov. 25, 1971, as amended at 56 FR 37289, Aug. 6, 1991; 62 FR 30272, June 3, 1997]

§ 81.133 Amarillo-Lubbock Intrastate Air Quality Control Region.

The Amarillo-Lubbock Intrastate Air Quality Control Region (Texas) consists of the territorial area encompassed by the boundaries of the following jurisdictions or described area (including the territorial area of all municipalities (as defined in section 302(f) of the Clean Air Act, 42 U.S.C. 1857h(f)) geographically located within the outermost boundaries of the area so delimited):

In the State of Texas: Armstrong County, Bailey County, Briscoe County, Carson County, Castro County, Childress County, Cochran County, Collingsworth County, Crosby County, Dallam County, Deaf Smith County, Dickens County, Donley County, Floyd County, Garza County, Gray County, Hale County, Hall County, Hansford County, Hartley County, Hemphill County, Hockley County, Hutchinson County, King County, Lamb County, Lipscomb County, Lubbock County, Lynn County, Moore County, Motley County, Ochiltree County, Oldham County, Parmer County, Potter County, Randall County, Roberts County, Sherman County, Swisher County, Terry County, Wheeler County, Yoakum County.

[36 FR 22421, Nov. 25, 1971, as amended at 62 FR 30272, June 3, 1997]

§ 81.134 Austin-Waco Intrastate Air Quality Control Region.

The Austin-Waco Intrastate Air Quality Control Region (Texas) consists of the territorial area encompassed by the boundaries of the following jurisdictions or described area (including the territorial area of all municipalities (as defined in section 302(f) of the Clean Air Act, 42 U.S.C. 1857h(f)) geographically located within the outermost boundaries of the area so delimited):

In the State of Texas: Bastrop County, Bell County, Blanco County, Bosque County, Brazos County, Burleson County, Burnet County, Caldwell County, Coryell County, Falls County, Fayette County, Freestone County, Grimes County, Hamilton County, Hays County, Hill County, Lampasas County, Lee County, Leon County, Limestone County, Llano County, Madison County, McLennan County, Milam County, Mills County, Robertson County, San Saba County, Travis County, Washington County, Williamson County.

[36 FR 22421, Nov. 25, 1971, as amended at 56 FR 32789, Aug. 6, 1991; 62 FR 30272, June 3, 1997]

§ 81.135 Brownsville-Laredo Intrastate Air Quality Control Region.

The Brownsville-Laredo Intrastate Air Quality Control Region (Texas) consists of the territorial area encompassed by the boundaries of the following jurisdictions or described area (including the territorial area of all municipalities (as defined in section 302(f) of the Clean Air Act, 42 U.S.C. 1857h(f)) geographically located within the outermost boundaries of the area aso delimited):

In the State of Texas: Cameron County, Hidalgo County, Jim Hogg County, Starr County, Webb County, Willacy County, Zapata County.

§ 81.136 Corpus Christi-Victoria Intrastate Air Quality Control Region.

The Corpus Christi-Victoria Intrastate Air Quality Control Region (Texas) consists of the territorial area

encompassed by the boundaries of the following jurisdictions or described area (including the territorial area of all municipalities (as defined in section 302(f) of the Clean Air Act, 42 U.S.C. 1857h(f)) geographically located within the outermost boundaries of the area so delimited):

In the State of Texas: Aransas County, Bee County, Brooks County, Calhoun County, De Witt County, Duval County, Goliad County, Gonzales County, Jackson County, Jim Wells County, Kenedy County, Kleberg County, Lavaca County, Live Oak County, McMullen County, Nueces County, Refugio County, San Patricio County, Victoria County.

[36 FR 22421, Nov. 21, 1971, as amended at 62 FR 30272, June 3, 1997]

§ 81.137 Midland-Odessa-San Angelo Intrastate Air Quality Control Region.

The Midland-Odessa-San Angelo Intrastate Air Quality Control Region (Texas) consists of the territorial area encompassed by the boundaries of the following jurisdictions or described area (including the territorial area of all municipalities (as defined in section 302(f) of the Clean Air Act, 42 U.S.C. 1857h(e)) geographically located within the outermost boundaries of the area so delimited):

In the State of Texas: Andrews County, Borden County, Coke County, Concho County, Crane County, Crockett County, Dawson County, Ector County, Gaines County, Glasscock County, Howard County, Irion County, Kimble County, Loving County, Martin County, Mason County, McCulloch County, Menard County, Midland County, Pecos County, Reagan County, Reeves County, Schleicher County, Sterling County, Sutton County, Terrell County, Tom Green County, Upton County, Ward County, Winkler County.

[36 FR 22421, Nov. 25, 1971, 56 FR 37289, Aug. 6, 1991, as amended at 62 FR 30273, June 3, 1997]

§ 81.138 Central Arkansas Intrastate Air Quality Control Region.

The Central Arkansas Intrastate Air Quality Control Region consists of the territorial area encompassed by the boundaries of the following jurisdictions or described area (including the territorial area of all municipalities (as defined in section 302(f) of the Clean Air Act, 42 U.S.C. 1857h(f)) geographically located within the outermost boundaries of the area so delimited):

In the State of Arkansas: Chicot County, Clark County, Cleveland County, Conway County, Dallas County, Desha County, Drew County, Faulkner County, Garland County, Grant County, Hot Spring County, Jefferson County, Lincoln County, Lonoke County, Perry County, Pope County, Pulaski County, Saline County, Yell County.

§ 81.139 Northeast Arkansas Intrastate Air Quality Control Region.

The Northeast Arkansas Intrastate Air Quality Control Region consists of the territorial area encompassed by the boundaries of the following jurisdictions or described area (including the territorial area of all municipalities (as defined in section 302(f) of the Clean Air Act, 42 U.S.C. 1857h(f)) geographically located within the outermost boundaries of the area so delimited):

In the State of Arkansas: Arkansas County, Clay County, Craighead County, Cross County, Greene County, Independence County, Jackson County, Lawrence County, Lee County, Mississippi County, Monroe County, Phillips County, Poinsett County, Prairie County, Randolph County, Saint Francis County, Sharp County, White County, Woodruff County.

§ 81.140 Northwest Arkansas Intrastate Air Quality Control Region.

The Northwest Arkansas Intrastate Air Quality Control Region consists of the territorial area encompassed by the boundaries of the following jurisdictions or described area (including the territorial area of all municipalities (as defined in section 302(f) of the Clean Air Act, 42 U.S.C. 1857h(f)) geographically located within the outermost boundaries of the area so delimited):

In the State of Arkansas: Baxter County, Boone County, Carroll County, Cleburne County, Franklin County, Fulton County, Izard County, Johnson County, Logan County, Madison County, Marion County, Montgomery County, Newton County, Pike County, Polk County, Scott County, Searcy County, Stone County, Van Buren County.

§ 81.141 Berkshire Intrastate Air Quality Control Region.

The Berkshire Intrastate Air Quality Control Region (Massachusetts) consists of the territorial area encompassed by the boundaries of the following jurisdictions or described area (including the territorial area of all municipalities (as defined in section 302(f) of the Clean Air Act, 42 U.S.C. 1857h(f)) geographically located within the outermost boundaries of the area so delimited):

In the State of Massachusetts: Berkshire County.

§ 81.142 Central Massachusetts Intrastate Air Quality Control Region.

The Central Massachusetts Intrastate Air Quality Control Region consists of the territorial area encompassed by the boundaries of the following jurisdictions or described area (including the territorial area of all municipalities (as defined in section 302(f) of the Clean Air Act, 42 U.S.C. 1857h(f)) geographically located within the outermost boundaries of the area so delimited):

In the State of Massachusetts: Township—Ashburnham, Ashby, Athol, Auburn, Barre, Berlin, Blackstone, Boylston, Brookfield, Charlton, Clinton, Douglas, Dudley, East Brookfield, Grafton, Hardwick, Harvard, Holden, Hopedale, Hubbardston, Lancaster, Leicester, Lunenburg, Mendon, Millbury, Millville, New Braintree, Northborough, Northbridge, North Brookfield, Oakham, Oxford, Paxton, Petersham, Phillipston, Princeton, Royalston, Rutland, Shirley, Shrewsbury, Southbridge, Spencer, Sterling, Sturbridge, Sutton, Templeton, Townsend, Upton, Uxbridge, Warren, Webster, Westborough, West Boylston, West Brookfield, Westminster, Winchendon,

CITIES—Fitchburg, Gardner, Leominster, Worcester.

§ 81.143 Central Virginia Intrastate Air Quality Control Region.

The Central Virginia Intrastate Air Quality Control Region consists of the territorial area encompassed by the boundaries of the following jurisdictions or described area (including the territorial area of all municipalities (as defined in section 302(f) of the Clean Air Act, 42 U.S.C. 1857h(f)) geographically located within the outermost boundaries of the area so delimited):

In the State of Virginia: Counties—Amelia, Amherst, Appomattox, Bedford, Brunswick, Buckingham, Campbell, Charlotte, Cumberland, Franklin, Halifax, Henry, Lunenburg, Mecklenburg, Nottoway, Patrick, Pittsylvania, Prince Edward.

CITIES—Bedford, Danville, Lynchburg, Martinsville, South Boston.

TOWNS—Blackstone, Farmville, Rocky Mount, South Hill.

§ 81.144 Northeastern Virginia Intrastate Air Quality Control Region.

The Northeastern Virginia Intrastate Air Quality Control Region consists of the territorial area encompassed by the boundaries of the following jurisdictions or described area (including the territorial area of all municipalities (as defined in section 302(f) of the Clean Air Act, 42 U.S.C. 1857h(f)) geographically located within the outermost boundaries of the area so delimited):

In the State of Virginia: Counties—Accomack, Albermarle, Caroline, Culpeper, Essex, Fauquier, Fluvanna, Gloucester, Greene, King and Queen, King George, King William, Lancaster, Louisa, Madison, Mathews, Middlesex, Nelson, Northampton, Northumberland, Orange, Rappahannock, Richmond, Spotsylvania, Stafford, Westmoreland.

CITIES—Charlottesville, Fredericksburg.

TOWNS—Culpeper, Warrenton.

§ 81.145 State Capital Intrastate Air Quality Control Region.

The State Capital Intrastate Air Quality Control Region (Virginia) consists of the territorial area encompassed by the boundaries of the following jurisdictions or described area (including the territorial area of all municipalities (as defined in section 302(f) of the Clean Air Act, 42 U.S.C. 1857h(f)) geographically located within the outermost boundaries of the area so delimited):

In the State of Virginia: Counties—Charles City, Chesterfield, Dinwiddie, Goochland, Greensville, Hanover, Henrico, New Kent, Powhatan, Prince George, Surry, Sussex.

CITIES—Colonial Heights, Emporia, Hopewell, Petersburg, Richmond.

§ 81.146 Valley of Virginia Intrastate Air Quality Control Region.

The Valley of Virginia Intrastate Air Quality Control Region consists of the territorial area encompassed by the

boundaries of the following jurisdictions or described area (including the territorial area of all municipalities (as defined in section 302(f) of the Clean Air Act, 42 U.S.C. 1857h(f)) geographically located within the outermost boundaries of the area so delimited):

In the State of Virginia: Counties—Alleghany, Augusta, Bath, Botetourt, Clarke, Craig, Floyd, Frederick, Giles, Highland, Montgomery, Page, Pulaski, Roanoke, Rockbridge, Rockingham, Shenandoah, Warren.

CITIES—Buena Vista, Clifton Forge, Covington, Harrisonburg, Lexington, Radford, Roanoke, Salem, Staunton, Waynesboro, Winchester.

TOWNS—Blacksburg, Christiansburg, Front Royal, Luray, Pulaski, Vinton.

§ 81.147 Eastern Mountain Intrastate Air Quality Control Region.

The Eastern Mountain Intrastate Air Quality Control Region (North Carolina) consists of the territorial area encompassed by the boundaries of the following jurisdictions or described area (including the territorial area of all municipalities (as defined in section 302(f) of the Clean Air Act, 42 U.S.C. 1857h(f)) geographically located within the outermost boundaries of the area so delimited):

In the State of North Carolina: Alexander County, Alleghany County, Ashe County, Avery County, Burke County, Caldwell County, Catawba County, Cleveland County, McDowell County, Mitchell County, Polk County, Rutherford County, Watauga County, Wilkes County, Yancey County.

§ 81.148 Eastern Piedmont Intrastate Air Quality Control Region.

The Eastern Piedmont Intrastate Air Quality Control Region (North Carolina) consists of the territorial area encompassed by the boundaries of the following jurisdictions or described area (including the territorial area of all municipalities (as defined in section 302(f) of the Clean Air Act, 42 U.S.C. 1857h(f)) geographically located within the outermost boundaries of the area so delimited):

In the State of North Carolina: Chatham County, Durham County, Edgecombe County, Franklin County, Granville County, Halifax County, Johnston County, Lee County, Nash County, Northampton County, Orange County, Person County, Vance County, Wake County, Warren County, Wilson County.

§ 81.149 Northern Coastal Plain Intrastate Air Quality Control Region.

The Northern Coastal Plain Intrastate Air Quality Control Region (North Carolina) consists of the territorial area encompassed by the boundaries of the following jurisdictions or described area (including the territorial area of all municipalities (as defined in section 302(f) of the Clean Air Act, 42 U.S.C. 1857h(f)) geographically located within the outermost boundaries of the area so delimited):

In the State of North Carolina: Beaufort County, Bertie County, Camden County, Chowan County, Currituck County, Dare County, Gates County, Hertford County, Hyde County, Martin County, Pasquotank County, Perquimans County, Pitt County, Tyrrell County, Washington County.

§ 81.150 Northern Piedmont Intrastate Air Quality Control Region.

The Northern Piedmont Intrastate Air Quality Control Region (North Carolina) consists of the territorial area encompassed by the boundaries of the following jurisdictions or described area (including the territorial area of all municipalities (as defined in section 302(f) of the Clean Air Act, 42 U.S.C. 1857h(f)) geographically located within the outermost boundaries of the area so delimited):

In the State of North Carolina: Alamance County, Caswell County, Davidson County, Davie County, Forsyth County, Guilford County, Randolph County, Rockingham County, Stokes County, Surry County, Yadkin County.

§ 81.151 Sandhills Intrastate Air Quality Control Region.

The Sandhills Intrastate Air Quality Control Region (North Carolina) consists of the territorial area encompassed by the boundaries of the following jurisdictions or described area (including the territorial area of all municipalities (as defined in section 302(f) of the Clean Air Act, 42 U.S.C. 1857h(f)) geographically located within the outermost boundaries of the area so delimited):

In the State of North Carolina: Anson County, Bladen County, Cumberland County, Harnett County, Hoke County, Montgomery

County, Moore County, Richmond County, Robeson County, Sampson County, Scotland County.

§ 81.152 Southern Coastal Plain Intrastate Air Quality Control Region.

The Southern Coastal Plain Intrastate Air Quality Control Region (North Carolina) consists of the territorial area encompassed by the boundaries of the following jurisdictions or described area (including the territorial area of all municipalities (as defined in section 302(f) of the Clean Air Act, 42 U.S.C. 1857h(f)) geographically located within the outermost boundaries of the area so delimited):

In the State of North Carolina: Brunswick County, Carteret County, Columbus County, Craven County, Duplin County, Greene County, Jones County, Lenoir County, New Hanover County, Onslow County, Pamlico County, Pender County, Wayne County.

§ 81.153 Western Mountain Intrastate Air Quality Control Region.

The Western Mountain Intrastate Air Quality Control Region (North Carolina) consists of the territorial area encompassed by the boundaries of the following jurisdictions or described area (including the territorial area of all municipalities (as defined in section 302(f) of the Clean Air Act, 42 U.S.C. 1857h(f)) geographically located with the outermost boundaries of the area so delimited):

In the State of North Carolina: Buncombe County, Cherokee County, Clay County, Graham County, Haywood County, Henderson County, Jackson County, Macon County, Madison County, Swain County, Transylvania County.

§ 81.154 Eastern Shore Intrastate Air Quality Control Region.

The Eastern Shore Intrastate Air Quality Control Region (Maryland) consists of the territorial area encompassed by the boundaries of the following jurisdictions or described area (including the territorial area of all municipalities (as defined in section 302(f) of the Clean Air Act, 42 U.S.C. 1857h(f)) geographically located within the outermost boundaries of the area so delimited):

In the State of Maryland: Caroline County, Cecil County, Dorchester County, Kent County, Queen Annes County, Somerset County, Talbot County, Wicomico County, Worcester County.

§ 81.155 Central Maryland Intrastate Air Quality Control Region.

The Central Maryland Intrastate Air Quality Control Region consists of the territorial area encompassed by the boundaries of the following jurisdictions or described areas (including the territorial area of all municipalities (as defined in section 302(f) of the Clean Air Act, 42 U.S.C. 1857(f)) geographically located within the outermost boundaries of the area so delimited):

In the State of Maryland: Frederick County.

§ 81.156 Southern Maryland Intrastate Air Quality Control Region.

The Southern Maryland Intrastate Air Quality Control Region consists of the territorial area encompassed by the boundaries of the following jurisdictions or described area (including the territorial area of all municipalities (as defined in section 302(f) of the Clean Air Act, 42 U.S.C. 1857h(f)) geographically located within the outermost boundaries of the area so delimited):

In the State of Maryland: Calvert County, Charles County, St. Marys County.

§ 81.157 North Central Wisconsin Intrastate Air Quality Control Region.

The North Central Wisconsin Intrastate Air Quality Control Region consists of the territorial area encompassed by the boundaries of the following jurisdictions or described area (including the territorial area of all municipalities (as defined in section 302(f) of the Clean Air Act, 42 U.S.C. 1857h(f)) geographically located within the outermost boundaries of the area so delimited):

In the State of Wisconsin: Adams County, Forest County, Florence County, Juneau County, Langlade County, Lincoln County, Marathon County, Oneida County, Portage County, Vilas County, Wood County.

§ 81.158 Southern Wisconsin Intrastate Air Quality Control Region.

The Southern Wisconsin Intrastate Air Quality Control Region consists of the territorial area encompassed by the

boundaries of the following jurisdictions or described area (including the territorial area of all municipalities (as defined in section 302(f) of the Clean Air Act, 42 U.S.C. 1857h(f)) geographically located within the outermost boundaries of the area so delimited):

In the State of Wisconsin: Columbia County, Dane County, Dodge County, Green County, Iowa County, Jefferson County, Lafayette County, Richland County, Sauk County.

§ 81.159 Great Basin Valley Intrastate Air Quality Control Region.

The Great Basin Valley Intrastate Air Quality Control Region (California) consists of the territorial area encompassed by the boundaries of the following jurisdictions or described area (including the territorial area of all municipalities (as defined in section 302(f) of the Clean Air Act, 42 U.S.C. 1857h(f)) geographically located within the outermost boundaries of the area so delimited):

In the State of California: Alpine County, Inyo County, Mono County.

§ 81.160 North Central Coast Intrastate Air Quality Control Region.

The North Central Coast Intrastate Air Quality Control Region (California) consists of the territorial area encompassed by the boundaries of the following jurisdictions or described area (including the territorial area of all municipalities (as defined in section 302(f) of the Clean Air Act, 42 U.S.C. 1857h(f)) geographically located within the outermost boundaries of the area so delimited):

In the State of California: Monterey County, San Benito County, Santa Cruz County.

§ 81.161 North Coast Intrastate Air Quality Control Region.

The North Coast Intrastate Air Quality Control Region (California) consists of the territorial area encompassed by the boundaries of the following jurisdictions or described area (including the territorial area of all municipalities (as defined in section 302(f) of the Clean Air Act, 42 U.S.C. 1857h(f)) geographically located within the outermost boundaries of the area so delimited):

In the State of California: Del Norte County, Humboldt County, Mendocino County, Trinity County.

Sonoma County—that portion of Sonoma County which lies north and west of a line described as follows: Beginning at the southeasterly corner of the Rancho Estero Americano, being on the boundary line between Marin and Sonoma counties, California; thence running northerly along the easterly boundary line of said Rancho Estero Americano to the northeasterly corner thereof, being an angle corner in the westerly boundary line of Rancho Canada de Jonive; thence running along said boundary of Rancho Canada de Jonive westerly, northerly and easterly to its intersection with the easterly line of Graton Road; thence running along the easterly and southerly line of Graton Road, northerly and easterly to its intersection with the easterly line of Sullivan Road; thence running northerly along said easterly line of Sullivan Road to the southerly line of Green Valley Road; thence running easterly along the said southerly line of Green Valley Road and easterly along the southerly line of State highway 116, to the westerly line of Vine Hill Road; thence running along the westerly and northerly line of Vine Hill Road, northerly and easterly to its intersection with the westerly line of Laguna Road; thence running northerly along the westerly line of Laguna Road and the northerly projection thereof to the northerly line of Trenton Road; thence running westerly along the northerly line of said Trenton Road to the easterly line of Trenton-Healdsburg Road; thence running northerly along said easterly line of Trenton-Healdsburg Road to the easterly line of Eastside Road; thence running northerly along said easterly line of Eastside Road to its intersection with the southerly line of Rancho Sotoyome; thence running easterly along said southerly line of Rancho Sotoyome to is intersection with the township line common to Townships 8 and 9 North, Mt. Diablo Base and Meridian; thence running easterly along said township line to its intersection with the boundary line between Sonoma and Napa Counties, State of California.

[36 FR 22421, Nov. 25, 1971, as amended at 46 FR 3890, Jan. 16, 1981]

§ 81.162 Northeast Plateau Intrastate Air Quality Control Region.

The Northeast Plateau Intrastate Air Quality Control Region (California) consists of the territorial area encompassed by the boundaries of the following jurisdictions or described area (including the territorial area of all municipalities (as defined in section 302(f) of the Clean Air Act, 42 U.S.C.

1857h(f)) geographically located within the outermost boundaries of the area so delimited):

In the State of California: Lassen County, Modoc County, Siskiyou County.

Shasta County—that portion of Shasta County which lies east and north of a line described as follows: Beginning at the Shasta-Siskiyou County boundary and running south along the range line common to R. 2 E. and R. 1 E., Mt. Diablo Base and Meridian, to the southwest corner of T. 35 N., R. 2 E; then east along the township line common to T. 35 N. and T. 34 N. to the northwest corner of T. 34 N., R. 3 E.; then south along the range line common to R. 3 E. and R. 2 E. to the southwest corner of T. 33 N., R. 3 E.; then east along the township line common to T. 33 N. and T. 32 N. to the northwest corner of T. 32 N., R. 4 E.; then south along the range line common to R. 4 E. and R. 3 E. to the point of intersection with the northwest corner of the Lassen Volcanic National Park boundary; then east along the north boundary of Lassen Volcanic National Park to the point of intersection with the Lassen-Shasta County boundary.

[36 FR 22421, Nov. 25, 1971, as amended at 46 FR 3890, Jan. 16, 1981]

§ 81.163 Sacramento Valley Intrastate Air Quality Control Region.

The Sacramento Valley Intrastate Air Quality Control Region (California) consists of the territorial area encompassed by the boundaries of the following jurisdictions or described area (including the territorial area of all municipalities (as defined in section 302(f) of the Clean Air Act, 42 U.S.C. 1857h(f)) geographically located within the outermost boundaries of the area so delimited):

In the State of California: Butte County, Colusa County, Glenn County, Sacramento County, Sutter County, Tehama County, Yolo County, Yuba County.

Shasta County—that portion of Shasta County which lies west and south of a line described as follows: Beginning at the Shasta-Siskiyou County boundary and running south along the range line common to R. 2 E. and R. 1 E., Mt. Diablo Base and Meridian, to the southwest corner of T. 35 N., R. 2 E.; then east along the township line common to T. 35 N. and T. 34 N. to the northwest corner of T. 34 N., R. 3 E.; then south along the range line common to R. 3 E. and R. 2 E. to the southwest corner of T. 33 N., R. 3 E.; then east along the township line common to T. 33 N. and T. 32 N. to the northwest corner of T. 32 N., R. 4 E.; then south along the range line common to R. 4 E. and R. 3 E. to the point of intersection with the northwest corner of the Lassen Volcanic National Park boundary; then east along the north boundary of Lassen Volcanic National Park to the Point of intersection with the Lassen-Shasta County boundary.

Solano County—that portion of Solano County which lies north and east of a line described as follows:Beginning at the inersection of the westerly boundary of Solano County and the ¼ section line running east and west through the center of section 34, T. 6 N., R. 2 W., M.D.B. & M., thence east along said ¼ section line to the east boundary of section 36, T. 6 N., R. 2 W., thence south ½ mile and east 2.0 miles, more or less, along the west and south boundary of Los Putos Rancho to the northwest corner of section 4, T. 5 N., R. 1 W., thence east along a line common to T. 5 N. and T. 6 N. to the northeast corner of section 3, T. 5 N., R. 1 E., thence south along section lines to the southeast corner of section 8, T. 3 N., R. 2 E., thence east to the boundary between Solano and Sacramento Counties.

[36 FR 22421, Nov. 25, 1971, as amended at 46 FR 3890, Jan. 16, 1981]

§ 81.164 San Diego Intrastate Air Quality Control Region.

The San Diego Intrastate Air Quality Control Region (California) consists of the territorial area encompassed by the boundaries of the following jurisdictions or described area (including the territorial area of all municipalities (as defined in section 302(f) of the Clean Air Act, 42 U.S.C. 1857h(f)) geographically located within the outermost boundaries of the area so delimited):

In the State of California: San Diego County.

[36 FR 22421, Nov. 25, 1971, as amended at 46 FR 3890, Jan. 16, 1981]

§ 81.165 San Joaquin Valley Intrastate Air Quality Control Region.

The San Joaquin Valley Intrastate Air Quality Control Region (California) consists of the territorial area encompassed by the boundaries of the following jurisdictions or described area (including the territorial area of all municipalities (as defined in section 302(f) of the Clean Air Act, 42 U.S.C. 1857h(f)) geographically located within the outermost boundaries of the area so delimited):

In the State of California: Fresno County, Kings County, Madera County, Merced County, San Joaquin County, Stanislaus County, Tulare County.

Kern County—that portion of Kern County which lies west and north of a line described as follows: Beginning at the Kern-Los Angeles County boundary and running north and east along the northwest boundary of the Rancho La Liebre Land Grant to the point of intersection with the range line common to R. 15 W. and R. 16 W., San Bernardino Base and Meridian; then north along the range line to the northwest corner of section 2, T. 32 S., R. 32 E., Mount Diablo Base and Meridian; then east along the township line common to T. 32 S. and T. 31 S.; then north along the range line common to R. 35 E. and R. 34 E.; then east along the township line common to T. 29 S. and T. 28 S.; then north along the range line common to R. 36 E. and R. 35 E.; then east along the township line common to T. 28 S. and T. 27 S.; then north along the range line common to R. 37 E. and R. 36 E. to the Kern-Tulare County boundary.

[36 FR 22421, Nov. 25, 1971, as amended at 46 FR 3890, Jan. 16, 1981]

§ 81.166 South Central Coast Intrastate Air Quality Control Region.

The South Central Coast Intrastate Air Quality Control Region (California) consists of the territorial area encompassed by the boundaries of the following jurisdictions or described area (including the territorial area of all municipalities (as defined in section 302(f) of the Clean Air Act, 42 U.S.C. 1857h(f)) geographically located within the outermost boundaries of the area so delimited):

In the State of California: San Luis Obispo County.

Santa Barbara County—that portion of Santa Barbara County which lies north of a line described as follows: Beginning at the Pacific Ocean outfall of Jalama Creek and running east and north along Jalama Creek to a point of intersection with the west boundary of the San Julian Land Grant; then south along the San Julian Land Grant boundary to its southwest corner; then east along the south boundary of the San Julian Land Grant to the northeast corner of partial sec. 20, T. 5 N., R. 32 W., San Bernardino Base and Meridian; then south and east along the boundary of the Las Cruces Land Grant to the southwest corner of partial sec. 22, T. 5 N., R. 32 W.; then northeast along the Las Cruces Land Grant boundary; then east along the north boundaries of sec. 13, T. 5 N., R. 32 W., and secs. 18, 17, 16, 15, 14, 13, T. 5 N., R. 31 W., and secs. 18, 17, 16, 15, 14, 13, T. 5 N., R. 30 W., and secs. 18, 17, 16, 15, T. 5 N., R. 29 W.; then south along the east boundary of sec. 15 T. 5 N., R. 29 W.; then east along the north boundaries of secs. 23 and 24, T. 5 N., R. 29 W., and secs. 19, 20, 21, 22, 23, 24, T. 5 N., R. 28 W., and secs. 19 and 20, T. 5 N., R. 27 W.; then south along the east boundary of sec. 20, T. 5 N., R. 27 W.; then east along the north boundaries of secs. 28, 27, 26, 25, T. 5 N., R. 27 W. and sec. 30, T. 5 N., R. 26 W.; then south along the east boundary of sec. 30, T. 5 N., R. 26 W.; then east along the north boundaries of secs. 32, 33, 34, 35, T. 5 N., R. 26 W.; then south along the east boundary of sec. 35, T. 5 N., R. 26 W. to the township line common to T. 4 N. and T. 5 N.; then east along this township line to the Santa Barbara-Ventura County boundary.

§ 81.167 Southeast Desert Intrastate Air Quality Control Region.

The Southeast Desert Intrastate Air Quality Control Region (California) consists of the territorial area encompassed by the boundaries of the following jurisdictions or described area (including the territorial area of all municipalities (as defined in section 302(f) of the Clean Air Act, 42 U.S.C. 1857h(f)) geographically located within the outermost boundaries of the area so delimited):

In the State of California: Imperial County.

Kern County—that portion of Kern County which lies east and south of a line described as follows: Beginning at the Kern-Los Angeles County boundary and running north and east along the northwest boundary of the Rancho La Liebre Land Grant to the point of intersection with the range line common to R. 15 W. and R. 16 W., San Bernardino Base and Meridian; then north along the range line to the northwest corner of Section 2, T. 32 S., R. 32 E., Mount Diablo Base and Meridian; then east along the township line common to T. 32 S. and T. 31 S.; then north along the range line common to R. 35 E. and R. 34 E.; then east along the township line common to T. 29 S. and T. 28 S.; then north along the range line common to R. 36 E. and R. 35 E.; then east along the township line common to T. 28 S. and T. 27 S.; then north along the range line common to R. 37 E. and R. 36 E. to the Kern-Tulare County boundary.

Los Angeles County—that portion of Los Angeles County which lies north and east of a line described as follows: Beginning at the Los Angeles-San Bernardino County boundary and running west along the township line common to T. 3 N. and T. 2 N., San Bernardino Base and Meridian; then north along the range line common to R. 8 W. and R. 9 W.; then west along the township line common to T. 4 N. and T. 3 N.; then north

along the range line common to R. 12 W. and R. 13 W. to the southeast corner of Section 12, T. 5 N.; R. 13 W.; then west along the south boundaries of Sections 12, 11, 10, 9, 8, and 7, T. 5 N., R. 13 W. to the boundary of the Angeles National Forest which is collinear with the range line common to R. 13 W. and R. 14 W.; then north and west along the Angeles National Forest boundary to the point of intersection with the township line common to T. 7 N. and T. 6 N. (point is at the northwest corner of Section 4 in T. 6 N., R. 14 W.); then west along the township line common to T. 7 N. and T. 6 N.; then north along the range line common to R. 15 W. and R. 16 W. to the southeast corner of Section 13, T. 7 N., R. 16 W.; then along the south boundaries of Sections 13, 14, 15, 16, 17, and 18, T. 7 N., R. 16 W.; then north along the range line common to R. 16 W. and R. 17 W. to the north boundary of the Angeles National Forest (collinear with the township line common to T. 8 N. and T. 7 N.); then west and north along the Angeles National Forest boundary to the point of intersection with the south boundary of the Rancho La Liebre Land Grant; then west and north along this land grant boundary to the Los Angeles-Kern County boundary.

Riverside County—that portion of Riverside County which lies east of a line described as follows: Beginning at the Riverside-San Diego County boundary and running north along the range line common to R. 4 E. and R. 3 E., San Bernardino Base and Meridian; then east along the township line common to T. 8 S. and T. 7 S.; then north along the range line common to R. 5 E. and R. 4 E.; then west along the township line common to T. 6 S. and T. 7 S. to the southwest corner of Section 34, T. 6 S., R. 4 E.; then north along the west boundaries of Sections 34, 27, 22, 15, 10, and 3, T. 6 S., R. 4 E.; then west along the township line common to T. 5 S. and T. 6 S.; then north along the range line common to R. 4 E. and R. 3 E.; then west along the south boundaries of Sections 13, 14, 15, 16, 17, and 18, T. 5 S., R. 3 E.; then north along the range line common to R. 2 E. and R. 3 E.; then west along the township line common to T. 4 S. and T. 3 S. to the intersection with the southwest boundary of partial Section 31, T. 3 S., R. 1 W.; then northwest along that line to the intersection with the range line common to R. 2 W. and R. 1 W.; then north to the Riverside-San Bernardino County line.

San Bernardino County—that portion of San Bernardino County which lies east and north of a line described as follows: Beginning at the San Bernardino-Riverside County boundary and running north along the range line common to R. 3 E. and R. 2 E., San Bernardino Base and Meridian; then west along the township line common to T. 3 N. and T. 2 N. to the San Bernardino-Los Angeles County boundary.

[36 FR 22421, Nov. 25, 1971, as amended at 46 FR 3890, Jan. 16, 1981]

§ 81.168 Great Falls Intrastate Air Quality Control Region.

The Great Falls Intrastate Air Quality Control Region (Montana) consists of the territorial area encompassed by the boundaries of the following jurisdictions or described area (including the territorial area of all municipalities (as defined in section 302(f) of the Clean Air Act, 42 U.S.C. 1857h(f)) geographically located within the outermost boundaries of the area so delimited):

In the State of Montana: Blaine County, Cascade County, Chouteau County, Glacier County, Hill County, Liberty County, Pondera County, Teton County, Toole County.

§ 81.169 Helena Intrastate Air Quality Control Region.

The Helena Intrastate Air Quality Control Region (Montana) consists of the territorial area encompassed by the boundaries of the following jurisdictions or described area (including the territorial area of all municipalities (as defined in section 302(f) of the Clean Air Act, 42 U.S.C. 1857h(f)) geographically located within the outermost boundaries of the area so delimited):

In the State of Montana: Beaverhead County, Broadwater County, Deer Lodge County, Gallatin County, Granite County, Jefferson County, Lewis and Clark County, Madison County, Meagher County, Park County, Powell County, Silver Bow County.

§ 81.170 Miles City Intrastate Air Quality Control Region.

The Miles City Intrastate Air Quality Control Region (Montana) consists of the territorial area encompassed by the boundaries of the following jurisdictions or described area (including the territorial area of all municipalities (as defined in section 302(f) of the Clean Air Act, 42 U.S.C. 1857h(f)) geographically located within the outermost boundaries of the area so delimited):

In the State of Montana: Carter County, Custer County, Daniels County, Dawson County, Fallon County, Garfield County, McCone County, Phillips County, Powder

River County, Prairie County, Richland County, Roosevelt County, Rosebud County, Sheridan County, Treasure County, Valley County, Wibaux County.

§ 81.171 Missoula Intrastate Air Quality Control Region.

The Missoula Intrastate Air Quality Control Region (Montana) consists of the territorial area encompassed by the boundaries of the following jurisdictions or described area (including the territorial area of all municipalities (as defined in section 302(f) of the Clean Air Act, 42 U.S.C. 1857h(f)) geographically located within the outermost boundaries of the area so delimited):

In the State of Montana: Flathead County, Lake County, Lincoln County, Mineral County, Missoula County, Ravalli County, Sanders County.

§ 81.172 Comanche Intrastate Air Quality Control Region.

The Comanche Intrastate Air Quality Control Region (Colorado) consists of the territorial area encompassed by the boundaries of the following jurisdictions or described area (including the territorial area of all municipalities (as defined in section 302(f) of the Clean Air Act, 42 U.S.C. 1857h(f)) geographically located within the outermost boundaries of the area so delimited):

In the State of Colorado: Baca County, Bent County, Cheyenne County, Crowley County, Elbert County, Kiowa County, Kit Carson County, Lincoln County, Otero County, Prowers County.

§ 81.173 Grand Mesa Intrastate Air Quality Control Region.

The Grand Mesa Intrastate Air Quality Control Region (Colorado) consists of the territorial area encompassed by the boundaries of the following jurisdictions or described area (including the territorial area of all municipalities (as defined in section 302(f) of the Clean Air Act, 42 U.S.C. 1857h(f) geographically located within the outermost boundaries of the area so delimited):

In the State of Colorado: Delta County, Eagle County, Garfield County, Gunnison County, Hinsdale County, Mesa County, Montrose County, Ouray County, Pitkin County, San Miguel County, Summit County.

§ 81.174 Pawnee Intrastate Air Quality Control Region.

The Pawnee Intrastate Air Quality Control Region (Colorado) consists of the territorial area encompassed by the boundaries of the following jurisdictions or described area (including the territorial area of all municipalities (as defined in section 302(f) of the Clean Air Act, 42 U.S.C. 1857h(f)) geographically located within the outermost boundaries of the area so delimited):

In the State of Colorado: Larimer County, Logan County, Morgan County, Phillips County, Sedgwick County, Washington County, Weld County, Yuma County.

§ 81.175 San Isabel Intrastate Air Quality Control Region.

The San Isabel Intrastate Air Quality Control Region (Colorado) consists of the territorial area encompassed by the boundaries of the following jurisdictions or described area (including the territorial area of all municipalities (as defined in section 302(f) of the Clean Air Act, 42 U.S.C. 1857h(f)) geographically located within the outermost boundaries of the area so delimited):

In the State of Colorado: Chaffee County, Custer County, El Paso County, Fremont County, Huerfano County, Lake County, Las Animas County, Park County, Pueblo County, Teller County.

§ 81.176 San Luis Intrastate Air Quality Control Region.

The San Luis Intrastate Air Quality Control Region (Colorado) consists of the territorial area encompassed by the boundaries of the following jurisdictions or described area (including the territorial area of all municipalities (as defined in section 302(f) of the Clean Air Act, 42 U.S.C. 1857h(f)) geographically located within the outermost boundaries of the area so delimited):

In the State of Colorado: Alamosa County, Conejos County, Costilla County, Mineral County, Rio Grande County, Saguache County.

§ 81.177 Yampa Intrastate Air Quality Control Region.

The Yampa Intrastate Air Quality Control Region (Colorado) consists of the territorial area encompassed by the boundaries of the following jurisdictions or described area (including the

territorial area of all municipalities (as defined in section 302(f) of the Clean Air Act, 42 U.S.C. 1857h(f)) geographically located within the outermost boundaries of the area so delimited):

In the State of Colorado: Grand County, Jackson County, Moffat County, Rio Blanco County, Routt County.

§ 81.178 Southern Delaware Intrastate Air Quality Control Region.

The Southern Delaware Intrastate Air Quality Control Region (Delaware) consists of the territorial area encompassed by the boundaries of the following jurisdictions or described areas (including the territorial area of all municipalities (as defined in section 302(f) of the Clean Air Act, 42 U.S.C. 1857h(f)) geographically located within the outermost boundaries of the area so delimited):

In the State of Delaware: Kent County, Sussex County.

§ 81.179 Aroostook Intrastate Air Quality Control Region.

The Aroostook Intrastate Air Quality Control Region (Maine) consists of the territorial area encompassed by the boundaries of the following jurisdictions or described area (including the territorial area of all municipalities (as defined in section 302(f) of the Clean Air Act, 42 U.S.C. 1857h(f)) geographically located within the outermost boundaries of the area so delimited):

In the State of Maine: Aroostook County—That portion of Aroostook County which lies east of a line described as follows: Beginning at the point where the Maine-Canadian international border is intersected by a line common to the western boundary of Fort Kent Township and running due south to the intersection of said line with the Aroostook-Penobscot County boundary.

§ 81.181 Down East Intrastate Air Quality Control Region.

The Down East Intrastate Air Quality Control Region (Maine) consists of the territorial area encompassed by the boundaries of the following jurisdictions or described area (including the territorial area of all municipalities (as defined in section 302(f) of the Clean Air Act, 42 U.S.C. 1857h(f)) geographically located within the outermost boundaries of the area so delimited):

In the State of Maine: Hancock County, Washington County.

Penobscot County—That portion of Penobscot County which lies south of a line described as follows: Beginning at the point where the Penobscot-Aroostook County boundary is intersected by a line common to the boundaries of Patten and Stacyville Townships and running due west to the intersection of said line with Penobscot-Piscataquis County boundary.

Piscataquis County—That portion of Piscataquis County which lies south and east of a line described as follows: Beginning at the point where the Somerset-Piscataquis County boundary is intersected by a line common to the northern boundary of Blanchard Plantation and running northeast along the northern boundary of Blanchard Plantation to the northeast corner of Blanchard Plantation; then northwest along the western boundary of Monson Township to the northwest corner of Monson Township; then northeast along the northern boundaries of Monson, Willimantic, and Bowerbank Townships, the northern boundary of Barnard Plantation, the northern boundaries of Williamsburg and Brownville Townships, and the northern boundary of Lake View Plantation to the intersection of said line with Piscataquis-Penobscot County boundary, which is also common to the northeast corner of Lake View Plantation.

§ 81.182 Northwest Maine Intrastate Air Quality Control Region.

The Northwest Maine Intrastate Air Quality Control Region (Maine) consists of the territorial area encompassed by the boundaries of the following jurisdictions or described area (including the territorial area of all municipalities (as defined in section 302(f) of the Clean Air Act, 42 U.S.C. 1857h(f)) geographically located within the outermost boundaries of the area so delimited):

In the State of Maine:

Aroostook County—That portion of Aroostook County which lies west of a line described as follows: Beginning at the point where the Maine-Canadian international border is intersected by a line common to the western boundary of Fort Kent Township and running due south to the intersection of the said line with the Aroostook-Penobscot County boundary.

Franklin County—That portion of Franklin County which lies north and west of a line described as follows: Beginning at the point where the Oxford-Franklin County boundary is intersected by a line common to the northern boundary of Township No. 6,

Phillips Town, Salem Township, and Freeman Township to the intersection of the said line with the Franklin-Somerset County boundary, which is also common to the northeast corner of Freeman Township.

Oxford County—That portion of Oxford County which lies north and west of a line described as follows: Beginning at the point where the Maine-New Hampshire border is intersected by a line common to the northern boundary of Grafton Township, and running northeast along the northern boundaries of Grafton Township and Andover North Surplus to the intersection of said line with the Oxford-Franklin County boundary, which is also the northeast corner of Andover North Surplus.

Penobscot County—That portion of Penobscot County which lies north of a line described as follows: Beginning at the point where the Penobscot-Aroostook County boundary is intersected by a line common to the boundaries of Patten and Stacyville Townships, and running due west to the intersection of said line with the Penobscot-Piscataquis County boundary.

Piscataquis County—That portion of Piscataquis County which lies north and west of a line described as follows: Beginning at the point where the Somerset-Piscataquis County boundary is intersected by a line common to the northern boundary of Blanchard Plantation and running northeast along the northern boundary of Blanchard Plantation to the northeast corner of Blanchard Plantation; then northwest along the western boundary of Monson Township to the northwest corner of Monson Township; then northeast along the northern boundaries of Monson, Willimantic, and Bowerbank Townships, the northern boundary of Barnard Plantation, the northern boundaries of Williamsburg and Brownville Townships, and the northern boundary of Lake View Plantation to the intersection of said line with the Piscataquis-Penobscot County boundary, which is also common to the northeast corner of Lake View Plantation.

Somerset County—That portion of Somerset County which lies north and west of a line described as follows: Beginning at the point where the Somerset-Franklin County boundary is intersected by a line common to the northern boundary of New Portland Township and running northeast along the northern boundaries of New Portland, Embden, Solon, and Athens Townships to the intersection of said line with the Somerset-Piscataquis County boundary, which is common to the northeast corner of Athens Township.

§ 81.183 Eastern Connecticut Intrastate Air Quality Control Region.

The Eastern Connecticut Intrastate Air Quality Control Region consists of the territorial area encompassed by the boundaries of the following jurisdictions or described area (including the territorial area of all municipalities (as defined in section 302(f) of the Clean Air Act, 42 U.S.C. 1857h(f)) geographically located within the outermost boundaries of the area so delimited):

In the State of Connecticut: Towns—Ashford, Bozrah, Brooklyn, Canterbury, Chaplin, Chester, Clinton, Colchester, Columbia, Coventry, Deep River, Eastford, East Lyme, Essex, Franklin, Griswold, Groton, Hampton, Killingly, Killingworth, Lebanon, Ledyard, Lisbon, Lyme, Mansfield, Montville, North Stonington, Old Lyme, Old Saybrook, Plainfield, Pomfret, Preston, Putnam, Salem, Scotland, Sprague, Stafford, Sterling. Stonington, Thompson, Union, Voluntown, Waterford, Westbrook, Willington, Windham, Woodstock.

CITIES—Groton, New London, Norwich, Putnam, Willimantic.

§ 81.184 Northwestern Connecticut Intrastate Air Quality Control Region.

The Northwestern Connecticut Intrastate Air Quality Control Region consists of the territorial area encompassed by the boundaries of the following jurisdictions or described area (including the territorial area of all municipalities (as defined in section 302(f) of the Clean Air Act, 42 U.S.C. 1857h(f)) geographically located within the outermost boundaries of the area so delimited):

In the State of Connecticut: Towns—Barkhamsted, Canaan, Colebrook, Cornwall, Goshen, Hartland, Harwinton, Kent, Litchfield, Morris, New Hartford, Norfolk, North Canaan, Roxbury, Salisbury, Sharon, Warren, Washington, Winchester.

CITIES—Torrington, Winsted.

[36 FR 22421, Nov. 25, 1971, as amended at 45 FR 84788, Dec. 23, 1980]

§ 81.185 Northern Washington Intrastate Air Quality Control Region.

The Northern Washington Intrastate Air Quality Control Region consists of the territorial area encompassed by the boundaries of the following jurisdictions or described area (including the territorial area of all municipalities

(as defined in section 302(f) of the Clean Air Act, 42 U.S.C. 1857h(f)) geographically located within the outermost boundaries of the area so delimited):

In the State of Washington: Chelan County, Douglas County, Ferry County, Okanogan County, Pend Oreille County, Stevens County.

§ 81.187 Olympic-Northwest Washington Intrastate Air Quality Control Region.

The Olympic-Northwest Washington Intrastate Air Quality Control Region consists of the territorial area encompassed by the boundaries of the following jurisdictions or described area (including the territorial area of all municipalities (as defined in section 302(f) of the Clean Air Act, 42 U.S.C. 1857h(f)) geographically located within the outermost boundaries of the area so delimited):

In the State of Washington: Clallam County, Grays Harbor County, Island County, Jefferson County, Mason County, Pacific County, San Juan County, Skagit County, Thurston County, Whatcom County.

§ 81.189 South Central Washington Intrastate Air Quality Control Region.

The South Central Washington Intrastate Air Quality Control Region consists of the territorial area encompassed by the boundaries of the following jurisdictions or described area (including the territorial area of all municipalities (as defined in section 302(f) of the Clean Air Act, 42 U.S.C. 1857h(f)) geographically located within the outermost boundaries of the area so delimited):

In the State of Washington: Benton County, Franklin County, Kittitas County, Klickitat County, Walla Walla County, Yakima County.

§ 81.190 Eastern Idaho Intrastate Air Quality Control Region.

The Eastern Idaho Intrastate Air Quality Control Region consists of the territorial area encompassed by the boundaries of the following jurisdictions or described area (including the territorial area of all municipalities (as defined in section 302(f) of the Clean Air Act, 42 U.S.C. 1857h(f)) geographically located within the outermost boundaries of the area so delimited):

In the State of Idaho: Bannock County, Bear Lake County, Bingham County, Bonneville County, Butte County, Caribou County, Clark County, Franklin County, Fremont County, Jefferson County, Madison County, Oneida County, Power County, Teton County.

§ 81.191 Appalachian Intrastate Air Quality Control Region.

The Appalachian Intrastate Air Quality Control Region (Kentucky) consists of the territorial area encompassed by the boundaries of the following jurisdictions or described area (including the territorial area of all municipalities (as defined in section 302(f) of the Clean Air Act, 42 U.S.C. 1857h(f)) geographically located within the outermost boundaries of the area so delimited):

In the State of Kentucky: Bell County, Breathitt County, Clay County, Floyd County, Harlan County, Jackson County, Johnson County, Knott County, Knox County, Laurel County, Lee County, Leslie County, Letcher County, Magoffin County, Martin County, Owsley County, Perry County, Pike County, Rockcastle County, Whitley County, Wolfe County,

§ 81.192 Bluegrass Intrastate Air Quality Control Region.

The Bluegrass Intrastate Air Quality Control Region (Kentucky) consists of the territorial area encompassed by the boundaries of the following jurisdictions or described area (including the territorial area of all municipalities (as defined in section 302(f) of the Clean Air Act, 42 U.S.C. 1857h(f)) geographically located within the outermost boundaries of the area so delimited):

In the State of Kentucky: Anderson County, Bourbon County, Boyle County, Clark County, Estill County, Fayette County, Franklin County, Garrard County, Harrison County, Jessamine County, Lincoln County, Madison County, Mercer County, Nicholas County, Powell County, Scott County, Woodford County.

§ 81.193 North Central Kentucky Intrastate Air Quality Control Region.

The North Central Kentucky Intrastate Air Quality Control Region consists of the territorial area encompassed by the boundaries of the following jurisdictions or described area (including the territorial area of all municipalities (as defined in section 302(f) of the Clean Air Act, 42 U.S.C. 1857h(f)) geographically located within the outermost boundaries of the area so delimited):

In the State of Kentucky: Breckinridge County, Bullitt County, Grayson County, Hardin County, Henry County, Larue County, Marion County, Meade County, Nelson County, Oldham County, Shelby County, Spencer County, Trimble County, Washington County.

§ 81.194 South Central Kentucky Intrastate Air Quality Control Region.

The South Central Kentucky Intrastate Air Quality Control Region consists of the territorial area encompassed by the boundaries of the following jurisdictions or described area (including the territorial area of all municipalities (as defined in section 302(f) of the Clean Air Act, 42 U.S.C. 1857h(f)) geographically located within the outermost boundaries of the area so delimited):

In the State of Kentucky: Adair County, Allen County, Barren County, Butler County, Casey County, Clinton County, Cumberland County, Edmonson County, Green County, Hart County, Logan County, McCreary County, Metcalf County, Monroe County, Pulaski County, Russell County, Simpson County, Taylor County, Warren County, Wayne County.

§ 81.195 Central Michigan Intrastate Air Quality Control Region.

The Central Michigan Intrastate Air Quality Control Region consists of the territorial area encompassed by the boundaries of the following jurisdictions or described area (including the territorial area of all municipalities (as defined in section 302(f) of the Clean Air Act, 42 U.S.C. 1857h(f)) geographically located within the outermost boundaries of the area so delimited):

In the State of Michigan: Allegan County, Arenac County, Bay County, Clare County, Genesee County, Gladwin County, Gratiot County, Huron County, Ionia County, Iosco County, Isabella County, Kent County, Lake County, Lapeer County, Mason County, Mecosta County, Midland County, Montcalm County, Muskegon County, Newaygo County, Oceana County, Ogemaw County, Osceola County, Ottawa County, Roscommon County, Saginaw County, Sanilac County, Shiawassee County, Tuscola County.

§ 81.196 South Central Michigan Intrastate Air Quality Control Region.

The South Central Michigan Intrastate Air Quality Control Region consists of the territorial area encompassed by the boundaries of the following jurisdictions or described area (including the territorial area of all municipalities (as defined in section 302(f) of the Clean Air Act, 42 U.S.C. 1857h(f)) geographically located within the outermost boundaries of the areas so delimited):

In the State of Michigan: Barry County, Branch County, Calhoun County, Clinton County, Eaton County, Hillsdale County, Ingham County, Jackson County, Kalamazoo County, Lenawee County, Livingston County, St. Joseph County, Washtenaw County.

§ 81.197 Upper Michigan Intrastate Air Quality Control Region.

The Upper Michigan Intrastate Air Quality Control Region consists of the territorial area encompassed by the boundaries of the following jurisdictions or described area (including the territorial area of all municipalities (as defined in section 302(f) of the Clean Air Act, 42 U.S.C. 1857h(f)) geographically located within the outermost boundaries of the area so delimited):

In the State of Michigan: Alcona County, Alger County, Alpena County, Antrim County, Baraga County, Benzie County, Cheboygan County, Charlevoix County, Chippewa County, Crawford County, Delta County, Dickinson County, Emmet County, Gogebic County, Grand Traverse County, Houghton County, Iron County, Kalkaska County, Keweenaw County, Leelanau County, Luce County, Mackinac County, Manistee County, Marquette County, Menominee County, Missaukee County, Montmorency County, Ontonagon County, Oscoda County, Otsego County, Presque Isle County, Schoolcraft County, Wexford County.

§ 81.199 East Alabama Intrastate Air Quality Control Region.

The East Alabama Intrastate Air Quality Control Region consists of the territorial area encompassed by the boundaries of the following jurisdictions or described area (including the territorial area of all municipalities (as defined in section 302(f) of the Clean Air Act, 42 U.S.C. 1857h(f)) geographically located within the outermost boundaries of the area so delimited):

In the State of Alabama: Calhoun County, Chambers County, Cherokee County, Clay County, Cleburne County, Coosa County, Etowah County, Randolph County, Talladega County, Tallapoosa County.

§ 81.200 Metropolitan Columbus Intrastate Air Quality Control Region.

The Metropolitan Columbus Intrastate Air Quality Control Region (Ohio) consists of the territorial area encompassed by the boundaries of the following jurisdictions or described area (including the territorial area of all municipalities (as defined in section 302(f) of the Clean Air Act, 42 U.S.C. 1857h(f)) geographically located within the outermost boundaries of the area so delimited):

In the State of Ohio: Delaware County, Fairfield County, Franklin County, Licking County, Madison County, Perry County, Pickaway County, Union County.

§ 81.201 Mansfield-Marion Intrastate Air Quality Control Region.

The Mansfield-Marion Intrastate Air Quality Control Region (Ohio) consists of the territorial area encompassed by the boundaries of the following jurisdictions or described area (including the territorial area of all municipalities (as defined in section 302(f) of the Clean Air Act, 42 U.S.C. 1857h(f)) geographically located within the outermost boundaries of the area so delimited):

In the State of Ohio: Ashland County, Crawford County, Holmes County, Knox County, Marion County, Morrow County, Richland County, Wayne County, Wyandot County.

§ 81.202 Northwest Ohio Intrastate Air Quality Control Region.

The Northwest Ohio Intrastate Air Quality Control Region (Ohio) consists of the territorial area encompassed by the boundaries of the following jurisdictions or described area (including the territorial area of all municipalities (as defined in section 302(f) of the Clean Air Act, 42 U.S.C. 1857h(f)) geographically located within the outermost boundaries of the area so delimited):

In the State of Ohio: Allen County, Auglaize County, Champaign County, Defiance County, Fulton County, Hancock County, Hardin County, Henry County, Logan County, Mercer County, Paulding County, Putman County, Shelby County, Van Wert County, Williams County.

§ 81.203 Sandusky Intrastate Air Quality Control Region.

The Sandusky Intrastate Air Quality Control Region (Ohio) consists of the territorial area encompassed by the boundaries of the following jurisdictions or described area (including the territorial area of all municipalities (as defined in section 302(f) of the Clean Air Act, 42 U.S.C. 1857h(f)) geographically located within the outermost boundaries of the area so delimited):

In the State of Ohio: Erie County, Huron County, Ottawa County, Sandusky County, Seneca County.

§ 81.204 Wilmington-Chillicothe-Logan Intrastate Air Quality Control Region.

The Wilmington-Chillicothe-Logan Intrastate Air Quality Control Region (Ohio) consists of the territorial area encompassed by the boundaries of the following jurisdiction or described area (including the territorial area of all municipalities (as defined in section 302(f) of the Clean Air Act, 42 U.S.C. 1857h(f)) geographically located within the outermost boundaries of the area so delimited):

In the State of Ohio: Clinton County, Fayette County, Highland County, Hocking County, Jackson County, Pike County, Ross County, Vinton County.

§ 81.205 Zanesville-Cambridge Intrastate Air Quality Control Region.

The Zanesville-Cambridge Intrastate Air Quality Control Region (Ohio) consists of the territorial area encompassed by the boundaries of the following jurisdictions or described area

(including the territorial area of all municipalities (as defined in section 302(f) of the Clean Air Act, 42 U.S.C. 1857h(f)) geographically located within the outermost boundaries of the area so delimited):

In the State of Ohio: Carroll County, Coshocton County, Guernsey County, Harrison County, Muskingum County, Noble County, Tuscarawas County.

§ 81.213 Casper Intrastate Air Quality Control Region.

The Casper Intrastate Air Quality Control Region (Wyoming) consists of the territorial area encompassed by the boundaries of the following jurisdictions or described area (including the territorial area of all municipalities (as defined in section 302(f) of the Clean Air Act, 42 U.S.C. 1857h(f)) geographically located within the outermost boundaries of the area so delimited):

In the State of Wyoming: Converse County, Freemont County, Natrona County.

§ 81.214 Black Hills-Rapid City Intrastate Air Quality Control Region.

The Rapid City Intrastate Air Quality Control Region (South Dakota) has been renamed the Black Hills-Rapid City Intrastate Air Quality Control Region (South Dakota) and consists of the territorial area encompassed by the boundaries of the following jurisdictions or described area (including the territorial area of all municipalities (as defined in section 302(f) of the Clean Air Act, 42 U.S.C. 1857h(f)) geographically located within the outermost boundaries of the area so delimited):

In the State of South Dakota: Butte County, Custer County, Fall River County, Lawrence County, Meade County, Pennington County.

§ 81.215 East Central Indiana Intrastate Air Quality Control Region.

The East Central Indiana Intrastate Air Quality Control Region (Indiana) consists of the territorial area encompassed by the boundaries of the following jurisdictions or described area (including the territorial area of all municipalities (as defined in section 302(f) of the Clean Air Act, 42 U.S.C. 1857h(f)) geographically located within the outermost boundaries of the area so delimited):

In the State of Indiana: Blackford County, Delaware County, Grant County, Henry County, Jay County, Madison County, Randolph County, Wayne County.

§ 81.216 Northeast Indiana Intrastate Air Quality Control Region.

The Northeast Indiana Intrastate Air Quality Control Region (Indiana) consists of the territorial area encompassed by the boundaries of the following jurisdictions or described area (including the territorial area of all municipalities (as defined in section 302(f) of the Clean Air Act, 42 U.S.C. 1857h(f)) geographically located within the outermost boundaries of the area so delimited):

In the State of Indiana: Adams County, Allen County, De Kalb County, Huntington County, Lagrange County, Noble County, Steuben County, Wells County, Whitley County.

§ 81.217 Southern Indiana Intrastate Air Quality Control Region.

The Southern Indiana Intrastate Air Quality Control Region (Indiana) consists of the territorial area encompassed by the boundaries of the following jurisdictions or described area (including the territorial area of all municipalities (as defined in section 302(f) of the Clean Air Act, 42 U.S.C. 1857h(f)) geographically located within the outermost boundaries of the area so delimited):

In the State of Indiana: Bartholomew County, Brown County, Crawford County, Daviess County, Decatur County, Fayette County, Franklin County, Greene County, Harrison County, Jackson County, Jefferson County, Jennings County, Lawrence County, Martin County, Monroe County, Orange County, Owen County, Ripley County, Rush County, Scott County, Switzerland County, Union County, Washington County.

§ 81.218 Wabash Valley Intrastate Air Quality Control Region.

The Wabash Valley Intrastate Air Quality Control Region (Indiana) consists of the territorial area encompassed by the boundaries of the following jurisdictions or described area (including the territorial area of all municipalities (as defined in section 302(f) of the Clean Air Act, 42 U.S.C. 1857h(f)) geographically located within

the outermost boundaries of the area so delimited):

In the State of Indiana: Benton County, Carroll County, Cass County, Clay County, Clinton County, Fountain County, Fulton County, Howard County, Jasper County, Knox County, Miami County, Montgomery County, Newton County, Parke County, Pulaski County, Putnam County, Starke County, Sullivan County, Tippecanoe County, Tipton County, Vermillion County, Vigo County, Wabash County, Warren County, White County.

§ 81.219 Central Oregon Intrastate Air Quality Control Region.

The Central Oregon Intrastate Air Quality Control Region consists of the territorial area encompassed by the boundaries of the following jurisdictions or described area (including the territorial area of all municipalities (as defined in section 302(f) of the Clean Air Act, 42 U.S.C. 1857h(f)) geographically located within the outermost boundaries of the area so delimited):

In the State of Oregon: Crook County, Deschutes County, Hood River County, Jefferson County, Klamath County, Lake County, Sherman County, Wasco County.

§ 81.220 Eastern Oregon Intrastate Air Quality Control Region.

The Eastern Oregon Intrastate Air Quality Control Region consists of the territorial area encompassed by the boundaries of the following jurisdictions or described area (including the territorial area of all municipalities (as defined in section 302(f) of the Clean Air Act, 42 U.S.C. 1857h(f)) geographically located within the outermost boundaries of the area so delimited):

In the State of Oregon: Baker County, Gilliam County, Grant County, Harney County, Malheur County, Morrow County, Umatilla County, Union County, Wallowa County, Wheeler County.

§ 81.221 Southwest Oregon Intrastate Air Quality Control Region.

The Southwest Oregon Intrastate Air Quality Control Region consists of the territorial area encompassed by the boundaries of the following jurisdictions or described area (including the territorial area of all municipalities (as defined in section 302(f) of the Clean Air Act, 42 U.S.C. 1857h(f)) geographically located within the outermost boundaries of the area so delimited):

In the State of Oregon: Coos County, Curry County, Douglas County, Jackson County, Josephine County.

§ 81.226 Lincoln-Beatrice-Fairbury Intrastate Air Quality Control Region.

The Lincoln-Beatrice-Fairbury Intrastate Air Quality Control Region (Nebraska) consists of the territorial area encompassed by the boundaries of the following jurisdictions or described area (including the territorial area of all municipalities (as defined in section 302 (f) of the Clean Air Act, 42 U.S.C. 1857h(f)) geographically located within the outermost boundaries of the area so delimited):

In the State of Nebraska: Gage County, Jefferson County, Lancaster County, Thayer County.

§ 81.230 Allegheny Intrastate Air Quality Control Region.

The Allegheny Intrastate Air Quality Control Region (West Virginia) consists of the territorial area encompassed by the boundaries of the following jurisdictions or described area (including the territorial area of all municipalities (as defined in section 302(f) of the Clean Air Act, 42 U.S.C. 1857h(f)) geographically located within the outermost boundaries of the area so delimited):

In the State of West Virginia: Greenbrier County, Hampshire County, Hardy County, Monroe County, Pendleton County, Pocahontas County, Randolph County, Summers County, Tucker County.

In Grant County: Grant Magisterial District, Milroy Magisterial District.

In Mineral County: Cabin Run Magisterial District, Frankfort Magisterial District, Welton Magisterial District.

§ 81.231 Central West Virginia Intrastate Air Quality Control Region.

The Central West Virginia Intrastate Air Quality Control Region consists of the territorial area encompassed by the boundaries of the following jurisdictions or described area (including the territorial area of all municipalities (as defined in section 302(f) of the Clean

Air Act, 42 U.S.C. 1857h(f)) geographically located within the outermost boundaries of the area so delimited):

In the State of West Virginia: Braxton County, Calhoun County, Clay County, Doddridge County, Gilmer County, Lewis County, Nicholas County, Ritchie County, Roane County, Upshur County, Webster County, Wirt County.

§ 81.232 Eastern Panhandle Intrastate Air Quality Control Region.

The Eastern Panhandle Intrastate Air Quality Control Region (West Virginia) consists of the territorial area encompassed by the boundaries of the following jurisdictions or described area (including the territorial area of all municipalities (as defined in section 302(f) of the Clean Air Act, 42 U.S.C. 1857h(f) geographically located within the outermost boundaries of the area so delimited):

In the State of West Virginia: Berkeley County, Jefferson County, Morgan County.

§ 81.233 Kanawha Valley Intrastate Air Quality Control Region.

The Kanawha Valley Intrastate Air Quality Control Region (West Virginia) consists of the territorial area encompassed by the boundaries of the following jurisdictions or described area (including the territorial area of all municipalities (as defined in section 302(f) of the Clean Air Act, 42 U.S.C. 1857h(f)) geographically located within the outermost boundaries of the area so delimited):

In the State of West Virginia: Kanawha County, Putnam County.

In Fayette County: Falls Magisterial District, Kanawha Magisterial District.

§ 81.234 North Central West Virginia Intrastate Air Quality Control Region.

The North Central West Virginia Intrastate Air Quality Control Region consists of the territorial area encompassed by the boundaries of the following jurisdictions or described area (including the territorial area of all municipalities (as defined in section 302(f) of the Clean Air Act, 42 U.S.C. 1857h(f)) geographically located within the outermost boundaries of the area so delimited):

In the State of West Virginia: Barbour County, Harrison County, Marion County, Monongalia County, Preston County, Taylor County.

§ 81.235 Southern West Virginia Intrastate Air Quality Control Region.

The Southern West Virginia Intrastate Air Quality Control Region consists of the territorial area encompassed by the boundaries of the following jurisdictions or described area (including the territorial area of all municipalities (as defined in section 302(f) of the Clean Air Act, 42 U.S.C. 1857h(f)) geographically located within the outermost boundaries of the area so delimited):

In the State of West Virginia: Boone County, Lincoln County, Logan County, McDowell County, Mercer County, Mingo County, Raleigh County, Wyoming County.

In Fayette County: Fayetteville Magisterial District, Mountain Cove Magisterial District, Nuttall Magisterial District, Quinnimont Magisterial District, Sewell Mountain Magisterial District.

§ 81.236 Central Georgia Intrastate Air Quality Control Region.

The Central Georgia Intrastate Air Quality Control Region consists of the territorial area encompassed by the boundaries of the following jurisdictions or described area (including the territorial area of all municipalities (as defined in section 302(f) of the Clean Air Act, 42 U.S.C. 1857h(f)) geographically located within the outermost boundaries of the area so delimited):

In the State of Georgia: Baldwin County, Ben Hill County, Bibb County, Bleckley County, Crawford County, Dodge County, Hancock County, Houston County, Jasper County, Jeff Davis County, Johnson County, Jones County, Laurens County, Macon County, Monroe County, Montgomery County, Peach County, Pulaski County, Putnam County, Telfair County, Toombs County, Treutlen County, Twiggs County, Washington County, Wheeler County, Wilcox County, Wilkinson County.

§ 81.237 Northeast Georgia Intrastate Air Quality Control Region.

The Northeast Georgia Intrastate Air Quality Control Region consists of the territorial area encompassed by the boundaries of the following jurisdictions or described area (including the territorial area of all municipalities

(as defined in section 302(f) of the Clean Air Act, 42 U.S.C. 1857h(f)) geographically located within the outermost boundaries of the area so delimited):

In the State of Georgia: Banks County, Barrow County, Clarke County, Dawson County, Elbert County, Forsyth County, Franklin County, Greene County, Habersham County, Hall County, Hart County, Jackson County, Lumpkin County, Madison County, Morgan County, Newton County, Oconee County, Oglethorpe County, Rabun County, Stephens County, Towns County, Union County, Walton County, White County.

§ 81.238 Southwest Georgia Intrastate Air Quality Control Region.

The Southwest Georgia Intrastate Air Quality Control Region consists of the territorial area encompassed by the boundaries of the following jurisdictions or described area (including the territorial area of all municipalities (as defined in section 302(f) of the Clean Air Act, 42 U.S.C. 1857h(f)) geographically located within the outermost boundaries of the area so delimited):

In the State of Georgia: Baker County, Berrien County, Brooks County, Calhoun County, Clay County, Colquitt County, Cook County, Crisp County, Decatur County, Dougherty County, Early County, Echols County, Grady County, Irwin County, Lanier County, Lee County, Lowndes County, Miller County, Mitchell County, Randolph County, Seminole County, Terrell County, Thomas County, Tift County, Turner County, Worth County.

§ 81.239 Upper Rio Grande Valley Intrastate Air Quality Control Region.

The Upper Rio Grande Valley Intrastate Air Quality Control Region (New Mexico) consists of the territorial area encompassed by the boundaries of the following jurisdictions or described area (including the territorial area of all municipalities (as defined in section 302(f) of the Clean Air Act, 42 U.S.C. 1857h(f)) geographically located within the outermost boundaries of the area so delimited):

In the State of New Mexico: Los Alamos County, Santa Fe County, Taos County.

Those portions of Rio Arriba County lying east of the Continental Divide.

§ 81.240 Northeastern Plains Intrastate Air Quality Control Region.

The Northeastern Plains Intrastate Air Quality Control Region (New Mexico) consists of the territorial area encompassed by the boundaries of the following jurisdictions or described area (including the territorial area of all municipalities (as defined in section 302(f) of the Clean Air Act, 42 U.S.C. 1857h(f)) geographically located within the outermost boundaries of the area so delimited):

In the State of New Mexico: Colfax County, Guadalupe County, Harding County, Mora County, San Miguel County, Torrance County, Union County.

§ 81.241 Southwestern Mountains-Augustine Plains Intrastate Air Quality Control Region.

The Southwestern Mountains-Augustine Plains Intrastate Air Quality Control Region (New Mexico) consists of the territorial area encompassed by the boundaries of the following jurisdictions or described area (including the territorial area of all municipalities (as defined in section 302(f) of the Clean Air Act, 42 U.S.C. 1857h(f)) geographically located within the outermost boundaries of the area so delimited):

In the State of New Mexico: Catron County, Socorro County.

Those portions of McKinley County lying east of the Continental Divide.

Those portions of Valencia County, excluding the Zuni and Ramah Navajo Indian Reservations, lying west of a line described as follows: Starting at the point at which the south boundary of Bernalillo County intersects with the section line between secs. 1 and 2 T. 7 N., R. 2 W.; thence south to the southern boundary of the Laguna Indian Reservation between secs. 35 and 36 T. 7 N., R. 2 W.; then southerly on section lines to the Socorro-Valencia County line at secs. 11, 12, 13, and 14, T. 5 N., R. 2 W.

§ 81.242 Pecos-Permian Basin Intrastate Air Quality Control Region.

The Pecos-Permian Basin Intrastate Air Quality Control Region (New Mexico) consists of the territorial area encompassed by the boundaries of the following jurisdictions or described area (including the territorial area of all municipalities (as defined in section 302(f) of the Clean Air Act, 42 U.S.C. 1857h(f)) geographically located within

the outermost boundaries of the area so delimited):

In the State of New Mexico: Chaves County, Curry County, De Baca County, Eddy County, Lea County, Quay County, Roosevelt County.

§ 81.243 Central Minnesota Intrastate Air Quality Control Region.

The Central Minnesota Intrastate Air Quality Control Region consists of the territorial area encompassed by the boundaries of the following jurisdictions or described area (including the territorial area of all municipalities (as defined in section 302(f) of the Clean Air Act, 42 U.S.C. 1857h(f)) geographically located within the outermost boundaries of the area so delimited):

In the State of Minnesota: Benton County, Chisago County, Isanti County, Kanabec County, Mille Lacs County, Pine County, Sherburne County, Stearns County, Wright County.

§ 81.244 Northwest Minnesota Intrastate Air Quality Control Region.

The Northwest Minnesota Intrastate Air Quality Control Region consists of the territorial area encompassed by the boundaries of the following jurisdictions or described area (including the territorial area of all municipalities (as defined in section 302(f) of the Clean Air Act, 42 U.S.C. 1857h(f)) geographically located within the outermost boundaries of the area so delimited):

In the State of Minnesota: Becker County, Beltrami County, Cass County, Clearwater County, Crow Wing County, Douglas County, Grant County, Hubbard County, Kittson County, Lake of the Woods County, Mahnomen County, Marshall County, Morrison County, Norman County, Otter Tail County, Pennington County, Polk County, Pope County, Red Lake County, Roseau County, Stevens County, Todd County, Traverse County, Wadena County, Wilkin County.

§ 81.245 Southwest Minnesota Intrastate Air Quality Control Region.

The Southwest Minnesota Intrastate Air Quality Control Region consists of the territorial area encompassed by the boundaries of the following jurisdictions or described area (including the territorial area of all municipalities (as defined in section 302(f) of the Clean Air Act, 42 U.S.C. 1875h(f) geographically located within the outermost boundaries of the area so delimited):

In the State of Minnesota: Big Stone County, Chippewa County, Cottonwood County, Jackson County, Kandiyohi County, Lac qui Parle County, Lincoln County, Lyon County, McLeod County, Meeker County, Murray County, Nobles County, Pipestone County, Redwood County, Renville County, Rock County, Swift County, Yellow Medicine County.

§ 81.246 Northern Alaska Intrastate Air Quality Control Region.

The Northern Alaska Intrastate Air Quality Control Region consists of the territorial area encompassed by the boundaries of the following jurisdictions or described area (including the territorial area of all municipalities (as defined in section 302(f) of the Clean Air Act, 42 U.S.C. 1875h(f)) geographically located within the outermost boundaries of the area so delimited):

In the State of Alaska:

Those portions of the 1956 Election Districts 18–23, inclusive, as described in Article XIV, section 3 of the Constitution of the State of Alaska, which are not included in the designated Cook Inlet Intrastate Air Quality Control Region as designated August 12, 1970 (35 FR 12757).

§ 81.247 South Central Alaska Intrastate Air Quality Control Region.

The South Central Alaska Intrastate Air Quality Control Region consists of the territorial area encompassed by the boundaries of the following jurisdictions or described area (including the territorial area of all municipalities (as defined in section 302(f) of the Clean Air Act, 42 U.S.C. 1857h(f)) geographically located within the outermost boundaries of the area so delimited):

In the State of Alaska:

Those portions of the 1956 Election Districts 7–17, inclusive, and Election District 24 as described in Article XIV, section 3 of the Constitution of the State of Alaska, which are not included in the designated Cook Inlet Intrastate Air Quality Control Region as designated August 12, 1970 (35 FR 12757).

§ 81.248 Southeastern Alaska Intrastate Air Quality Control Region.

The Southeastern Alaska Intrastate Air Quality Control Region consists of the territorial area encompassed by the

boundaries of the following jurisdictions or described area (including the territorial area of all municipalities (as defined in section 302(f) of the Clean Air Act, 42 U.S.C. 1857h(f)) geographically located within the outermost boundaries of the area so delimited):

In the State of Alaska:
1956 Election Districts 1–6, inclusive, as described in Article XIV, section 3 of the Constitution of the State of Alaska.

§ 81.249 Northwest Oregon Intrastate Air Quality Control Region.

The Northwest Oregon Intrastate Air Quality Control Region consists of the territorial area encompassed by the boundaries of the following jurisdictions or described area (including the territorial area of all municipalities (as defined in section 302(f) of the Clean Air Act, 42 U.S.C. 1857h(f)) geographically located within the outermost boundaries of the area so delimited):

In the State of Oregon: Clatsop County, Lincoln County, Tillamook County.

§ 81.250 North Central Kansas Intrastate Air Quality Control Region.

The North Central Kansas Intrastate Air Quality Control Region consists of the territorial area encompassed by the boundaries of the following jurisdictions or described area (including the territorial area of all municipalities (as defined in section 302(f) of the Clean Air Act, 42 U.S.C. 1857h(f)) geographically located within the outermost boundaries of the area so delimited):

In the State of Kansas: Clay County, Cloud County, Dickinson County, Ellsworth County, Geary County, Jewell County, Lincoln County, McPherson County, Mitchell County, Morris County, Ottawa County, Republic County, Rice County, Riley County, Saline County, Washington County.

§ 81.251 Northeast Kansas Intrastate Air Quality Control Region.

The Northeast Kansas Intrastate Air Quality Control Region consists of the territorial area encompassed by the boundaries of the following jurisdictions or described area (including the territorial area of all municipalities (as defined in section 302(f) of the Clean Air Act, 42 U.S.C. 1857h(f)) geographically located within the outermost boundaries of the area so delimited):

In the State of Kansas: Atchison County, Brown County, Doniphan County, Douglas County, Franklin County, Jackson County, Jefferson County, Marshall County, Miami County, Nemaha County, Osage County, Pottawatomie County, Shawnee County, Wabaunsee County.

§ 81.252 Northwest Kansas Intrastate Air Quality Control Region.

The Northwest Kansas Intrastate Air Quality Control Region consists of the territorial area encompassed by the boundaries of the following jurisdictions or described area (including the territorial area of all municipalities (as defined in section 302(f) of the Clean Air Act, 42 U.S.C. 1857h(f)) geographically located within the outermost boundaries of the area so delimited):

In the State of Kansas: Barton County, Cheyenne County, Decatur County, Ellis County, Gove County, Graham County, Logan County, Ness County, Norton County, Osborne County, Phillips County, Rawlins County, Rooks County, Rush County, Russell County, Sheridan County, Sherman County, Smith County, Thomas County, Trego County, Wallace County.

§ 81.253 South Central Kansas Intrastate Air Quality Control Region.

The South Central Kansas Intrastate Air Quality Control Region consists of the territorial area encompassed by the boundaries of the following jurisdictions or described area (including the territorial area of all municipalities (as defined in section 302(f) of the Clean Air Act, 42 U.S.C. 1857h(f)) geographically located within the outermost boundaries of the area so delimited):

In the State of Kansas: Butler County, Chase County, Cowley County, Harper County, Harvey County, Kingman County, Marion County, Reno County, Sedgwick County, Sumner County.

§ 81.254 Southeast Kansas Intrastate Air Quality Control Region.

The Southeast Kansas Intrastate Air Quality Control Region consists of the territorial area encompassed by the boundaries of the following jurisdictions or described area (including the territorial area of all municipalities (as defined in section 302(f) of the Clean Air Act, 42 U.S.C. 1857h(f)) geographically located within the outermost boundaries of the area so delimited):

In the State of Kansas: Allen County, Anderson County, Bourbon County, Chautauqua County, Cherokee County, Coffey County, Crawford County, Elk County, Greenwood County, Labette County, Linn County, Lyon County, Montgomery County, Neosho County, Wilson County, Woodson County.

§ 81.255 Southwest Kansas Intrastate Air Quality Control Region.

The Southwest Kansas Intrastate Air Quality Control Region consists of the territorial area encompassed by the boundaries of the following jurisdictions or described area (including the territorial area of all municipalities (as defined in section 302(f) of the Clean Air Act, 42 U.S.C. 1857h(f)) geographically located within the outermost boundaries of the area so delimited):

In the State of Kansas: Barber County, Clark County, Comanche County, Edwards County, Finney County, Ford County, Grant County, Gray County, Greeley County, Hamilton County, Haskell County, Hodgeman County, Kearny County, Kiowa County, Lane County, Meade County, Morton County, Pawnee County, Pratt County, Scott County, Seward County, Stafford County, Stanton County, Stevens County, Wichita County.

§ 81.256 Northeast Iowa Intrastate Air Quality Control Region.

The Northeast Iowa Intrastate Air Quality Control Region consists of the territorial area encompassed by the boundaries of the following jurisdictions or described area (including the territorial area of all municipalities (as defined in section 302(f) of the Clean Air Act, 42 U.S.C. 1857h(f)) geographically located within the outermost boundaries of the area so delimited):

In the State of Iowa: Allamakee County, Benton County, Black Hawk County, Bremer County, Buchanan County, Chickasaw County, Delaware County, Fayette County, Howard County, Jones County, Linn County, Winneshiek County.

§ 81.257 North Central Iowa Intrastate Air Quality Control Region.

The North Central Iowa Intrastate Air Quality Control Region consists of the territorial area encompassed by the boundaries of the following jurisdictions or described area (including the territorial area of all municipalities (as defined in section 302(f) of the Clean Air Act, 42 U.S.C. 1857h(f)) geographically located within the outermost boundaries of the area so delimited):

In the State of Iowa: Butler County, Cerro Gordo County, Floyd County, Franklin County, Grundy County, Hamilton County, Hancock County, Hardin County, Humboldt County, Kossuth County, Mitchell County, Webster County, Winnebago County, Worth County, Wright County.

§ 81.258 Northwest Iowa Intrastate Air Quality Control Region.

The Northwest Iowa Intrastate Air Quality Control Region consists of the territorial area encompassed by the boundaries of the following jurisdictions or described area (including the territorial area of all municipalities (as defined in section 302(f) of the Clean Air Act, 42 U.S.C. 1857h(f)) geographically located within the outermost boundaries of the area so delimited):

In the State of Iowa: Buena Vista County, Calhoun County, Cherokee County, Clay County, Dickinson County, Emmet County, Ida County, O'Brien County, Osceola County, Palo Alto County, Pocahontas County, Sac County.

§ 81.259 Southwest Iowa Intrastate Air Quality Control Region.

The Southwest Iowa Intrastate Air Quality Control Region consists of the territorial area encompassed by the boundaries of the following jurisdictions or described area (including the territorial area of all municipalities (as defined in section 302(f) of the Clean Air Act, 42 U.S.C. 1857h(f)) geographically located within the outermost boundaries of the area so delimited):

In the State of Iowa: Adair County, Adams County, Audubon County, Carroll County, Cass County, Crawford County, Fremont County, Greene County, Guthrie County, Harrison County, Mills County, Monona County, Montgomery County, Page County, Ringgold County, Shelby County, Taylor County, Union County.

§ 81.260 South Central Iowa Intrastate Air Quality Control Region.

The South Central Iowa Intrastate Air Quality Control Region consists of the territorial area encompassed by the boundaries of the following jurisdictions or described area (including the territorial area of all municipalities (as defined in section 302(f) of the Clean

Air Act, 42 U.S.C. 1857h(f)) geographically located within the outermost boundaries of the area so delimited):

In the State of Iowa: Appanoose County, Boone County, Clarke County, Dallas County, Decatur County, Jasper County, Lucas County, Madison County, Mahaska County, Marion County, Marshall County, Monroe County, Polk County, Poweshiek County, Story County, Tama County, Warren County, Wayne County.

§ 81.261 Southeast Iowa Intrastate Air Quality Control Region.

The Southeast Iowa Intrastate Air Quality Control Region consists of the territorial area encompassed by the boundaries of the following jurisdictions or described area (including the territorial area of all municipalities (as defined in section 302(f) of the Clean Air Act, 42 U.S.C. 1857h(f)) geographically located within the outermost boundaries of the area so delimited):

In the State of Iowa: Cedar County, Davis County, Henry County, Iowa County, Jefferson County, Johnson County, Keokuk County, Van Buren County, Wapello County, Washington County.

NOTE: For purposes of identification, the Regions are referred to by Iowa authorities as follows:

Sec.
81.256 Northeast Iowa Intrastate Air Quality Control Region: Region 1.
81.257 North Central Iowa Intrastate Air Quality Control Region: Region 2.
81.258 Northwest Iowa Intrastate Air Quality Control Region: Region 3.
81.259 Southwest Iowa Intrastate Air Quality Control Region: Region 4.
81.260 South Central Iowa Intrastate Air Quality Control Region: Region 5.
81.261 Southeast Iowa Intrastate Air Quality Control Region: Region 6.

§ 81.262 North Central Illinois Intrastate Air Quality Control Region.

The North Central Illinois Intrastate Air Quality Control Region consists of the territorial area encompassed by the boundaries of the following jurisdictions or described area (including the territorial area of all municipalities (as defined in section 302(f) of the Clean Air Act, 42 U.S.C. 1857h(f)) geographically located within the outermost boundaries of the area so delimited):

In the State of Illinois: Bureau County, La Salle County, Lee County, Marshall County, Putnam County, Stark County.

§ 81.263 East Central Illinois Intrastate Air Quality Control Region.

The East Central Illinois Intrastate Air Quality Control Region consists of the territorial area encompassed by the boundaries of the following jurisdictions or described area (including the territorial area of all municipalities (as defined in section 302(f) of the Clean Air Act, 42 U.S.C. 1857h(f)) geographically located within the outermost boundaries of the area so delimited):

In the State of Illinois: Champaign County, Clark County, Coles County, Cumberland County, De Witt County, Douglas County, Edgar County, Ford County, Iroquois County, Livingston County, McLean County, Moultrie County, Piatt County, Shelby County, Vermilion County.

§ 81.264 West Central Illinois Intrastate Air Quality Control Region.

The West Central Illinois Intrastate Air Quality Control Region consists of the territorial area encompassed by the boundaries of the following jurisdictions or described area (including the territorial area of all municipalities (as defined in section 302(f) of the Clean Air Act, 42 U.S.C. 1857h(f)) geographically located within the outermost boundaries of the area so delimited):

In the State of Illinois: Adams County, Brown County, Calhoun County, Cass County, Christian County, Greene County, Jersey County, Logan County, Macon County, Macoupin County, Menard County, Montgomery County, Morgan County, Pike County, Sangamon County, Schuyler County, Scott County.

§ 81.265 Southeast Illinois Intrastate Air Quality Control Region.

The Southeast Illinois Intrastate Air Quality Control Region consists of the territorial area encompassed by the boundaries of the following jurisdictions or described area (including the territorial area of all municipalities (as defined in section 302(f) of the Clean Air Act, 42 U.S.C. 1857h(f)) geographically located within the outermost boundaries of the area so delimited):

In the State of Illinois: Clay County, Crawford County, Edwards County, Effingham County, Fayette County, Franklin County, Gallatin County, Hamilton County, Hardin County, Jackson County, Jasper County, Jefferson County, Lawrence County, Marion County, Perry County, Richland

County, Saline County, Wabash County, Wayne County, White County, Williamson County.

§ 81.266 Alabama and Tombigbee Rivers Intrastate Air Quality Control Region.

The Alabama and Tombigbee Rivers Intrastate Air Quality Control Region (Alabama) consists of the territorial area encompassed by the boundaries of the following jurisdictions or described area (including the territorial area of all municipalities (as defined in section 302(f) of the Clean Air Act, 42 U.S.C. 1857h(f)) geographically located within the outermost boundaries of the area so delimited):

In the State of Alabama: Choctaw County, Clarke County, Conecuh County, Dallas County, Marengo County, Monroe County, Perry County, Washington County, Wilcox County.

§ 81.267 Southeast Alabama Intrastate Air Quality Control Region.

The Southeast Alabama Intrastate Air Quality Control Region consists of the territorial area encompassed by the boundaries of the following jurisdictions or described area (including the territorial area of all municipalities (as defined in section 302(f) of the Clean Air Act, 42 U.S.C. 1857h(f)) geographically located within the outermost boundaries of the area so delimited):

In the State of Alabama: Barbour County, Coffee County, Covington County, Dale County, Geneva County, Henry County, Houston County.

§ 81.268 Mohave-Yuma Intrastate Air Quality Control Region.

The Mohave-Yuma Intrastate Air Quality Control Region (Arizona) has been revised to consist of the territorial area encompassed by the boundaries of the following jurisdictions or described area (including the territorial area of all municipalities (as defined in section 302(f) of the Clean Air Act, 42 U.S.C. 7602(f)) geographically located within the outermost boundaries of the area so delimited):

In the State of Arizona: Mohave County and Yuma County.

[45 FR 7545, Feb. 4, 1980]

§ 81.269 Pima Intrastate Air Quality Control Region.

The Pima Intrastate Air Quality Control Region (Arizona) consists of the territorial area encompassed by the boundaries of the following jurisdictions or described area (including the territorial area of all municipalities (as defined in section 302(f) of the Clean Air Act, 42 U.S.C. 1857h(f)) geographically located within the outermost boundaries of the area so delimited):

In the State of Arizona: Pima County.

[45 FR 67347, Oct. 10, 1980]

§ 81.270 Northern Arizona Intrastate Air Quality Control Region.

The Northern Arizona Intrastate Air Quality Control Region consists of the territorial area encompassed by the boundaries of the following jurisdictions or described area (including the territorial area of all municipalities (as defined in section 302(f) of the Clean Air Act, 42 U.S.C. 1857h(f)) geographically located within the outermost boundaries of the area so delimited):

In the State of Arizona: Apache County, Coconino County, Navajo County, Yavapai County.

[45 FR 67347, Oct. 10, 1980]

§ 81.271 Central Arizona Intrastate Air Quality Control Region.

The Central Arizona Intrastate Air Quality Control Region consists of the territorial area encompassed by the boundaries of the following jurisdictions or described area (including the territorial area of all municipalities (as defined in section 302(f) of the Clean Air Act, 42 U.S.C. 1857h(f)) geographically located within the outermost boundaries of the area so delimited):

In the State of Arizona: Gila County, Pinal County.

[45 FR 67348, Oct. 10, 1980]

§ 81.272 Southeast Arizona Intrastate Air Quality Control Region.

The Southeast Arizona Intrastate Air Quality Control Region consists of the territorial area encompassed by the boundaries of the following jurisdictions or described area (including the territorial area of all municipalities (as defined in section 302(f) of the Clean

Air Act, 42 U.S.C. 1857h(f)) geographically located within the outermost boundaries of the area so delimited):

In the State of Arizona: Cochise County, Graham County, Greenlee County, Santa Cruz County.

[45 FR 67348, Oct. 10, 1980]

§ 81.273 Lake County Intrastate Air Quality Control Region.

The Lake County Intrastate Air Quality Control Region consists of the territorial area encompassed by the boundaries of the following jurisdictions or described area (including the territorial area of all municipalities (as defined in section 302(f) of the Clean Air Act, 42 U.S.C. 1857h(f)) geographically located within the outermost boundaries of the area so delimited):

In the State of California: Lake County.

[46 FR 3891, Jan. 16, 1981]

§ 81.274 Mountain Counties Intrastate Air Quality Control Region.

The Mountain Counties Intrastate Air Quality Control Region consists of the territorial area encompassed by the boundaries of the following jurisdictions or described area (including the territorial area of all municipalities (as defined in section 302(f) of the Clean Air Act, 42 U.S.C. 1857h(f)) geographically located within the outermost boundaries of the area so delimited):

In the State of California: Amador County, Calaveras County, Mariposa County, Nevada Country, Plumas County, Sierra County, Tuolumne County.

El Dorado County—all of El Dorado County except that portion within the drainage area naturally tributary to Lake Tahoe including said Lake.

Placer County—all of Placer County except the following described area:That portion of Placer County within the drainage area naturally tributary to Lake Tahoe including said Lake, plus that area in the vicinity of the head of the Truckee River described as follows: commencing at the point common to the aforementioned drainage area crestline and the line common to Townships 15 North and 16 North, Mount Diablo Base and meridian (M.D.B. & M.), and following that line in a westerly direction to the northwest corner of Section 3, Township 15 North, Range 16 East, M.D.B. & M., thence south along the west line of Sections 3 and 10, Township 15 North, Range 16 East, M.D.B. & M., to the intersection with the said drainage area crestline, thence following the said drainage area boundary in a southeasterly, then northeasterly direction to and along the Lake Tahoe Dam, thence following the said drainage area crestline in a northeasterly, then northwesterly direction to the point of beginning.

[46 FR 3891, Jan. 16, 1981]

§ 81.275 Lake Tahoe Intrastate Air Quality Control Region.

The Lake Tahoe Intrastate Air Quality Control Region consists of the territorial area encompassed by the boundaries of the following jurisdictions or described area (including the territorial area of all municipalities (as defined in section 302(f) of the Clean Air Act, 42 U.S.C. 1857h(f)) geographically located within the outermost boundaries of the area so delimited:

In the State of California:

El Dorado County—that portion of El Dorado County within the drainage area naturally tributary to Lake Tahoe including said Lake.

Placer County—that portion of Placer County within the drainage area naturally tributary to Lake Tahoe including said Lake, plus that area in the vicinity of the head of the Truckee River described as follows: commencing at the point common to the aforementioned drainage area crestline and the line common to Townships 15 North and 16 North, Mount Diablo Base and Meridian (M.D.B. & M.), and following that line in a westerly direction to the northwest corner of Section 3, Township 15 North, Range 16 East, M.D.B. & M., thence south along the west line of Sections 3 and 10, Township 15 North, Range 16 East, M.D.B. & M., to the intersection with the said drainage area crestline, thence following the said drainage area boundary in a southeasterly, then northeasterly direction to and along the Lake Tahoe Dam, thence following the said drainage area crestline in a northeasterly, then northwesterly direction to the point of beginning.

[46 FR 3891, Jan. 16, 1981]

Subpart C—Section 107 Attainment Status Designations

AUTHORITY: 42 U.S.C. 7401, *et seq.*

SOURCE: 43 FR 8964, Mar. 3, 1978, unless otherwise noted.

§ 81.300 Scope.

(a) Attainment status designations as approved or designated by the Environmental Protection Agency (EPA) pursuant to section 107 of the CAA are listed in this subpart. Area designations are subject to revision whenever sufficient data become available to warrant a redesignation. Both the state and EPA can initiate changes to these designations, but any state redesignation request must be submitted to EPA for concurrence. The EPA has replaced the national ambient air quality standards for particulate matter measured as total suspended particulate with standards measured as particulate matter with an aerodynamic diameter less than or equal to a nominal 10 micrometers (PM–10). Accordingly, area designations for PM–10 are included in the lists in subpart C of this part. However, the TSP area designations will also remain in effect until the Administrator determines that the designations are no longer necessary for implementing the maximum allowable increases in concentrations of particulate matter pursuant to section 163(b) of the CAA, as explained in paragraph (b) of this section. The EPA has also added national ambient air quality standards for fine particulate matter measured as particulate matter with an aerodynamic diameter less than or equal to a nominal 2.5 micrometers ($PM_{2.5}$). Accordingly, area designations for $PM_{2.5}$ are included in the lists in subpart C of this part.

(b) Designated areas which are listed below as attainment (''Better than national standards'') or unclassifiable (''Cannot be classified'') for total suspended particulate (TSP), sulfur dioxide (SO_2), and nitrogen dioxide (NO_2), represent potential baseline areas or portions of baseline areas which are used in determining compliance with maximum allowable increases (increments) in concentrations of the respective pollutants for the prevention of significant deterioration of air quality (PSD). With respect to areas identified as ''Rest of State'' it should be assumed that such reference comprises a single area designation for PSD baseline area purposes. However, for PM–10, the use of the term ''Rest of State'' is an interim measure to designate as unclassifiable all locations not originally designated nonattainment for PM–10 in accordance with section 107(d)(4)(B) of the Act.

(c) For PM–10 areas designated nonattainment, pursuant to section 107(d)(4)(b) by operation of law upon enactment of the 1990 Amendments to the Act, the boundaries are more fully described as follows:

(1) For cities and towns, the boundary of the nonattainment area is defined by the municipal boundary limits as of November 15, 1990, the date the 1990 Amendments were signed into law, except for areas which were formerly categorized as ''Group I areas'', in which case the nonattainment area is defined by the municipal boundary limits as of October 31, 1990.

(2) Similarly, for planning areas, air quality maintenance areas, air basins, and urban growth boundaries the nonattainment area is defined by the entire planning area, air quality maintenance area, air basin, or urban growth boundary as of November 15, 1990, except for areas which were formerly ''Group I'', in which case the boundary is defined by the entire planning area, air quality maintenance area, air basin, or urban growth boundary as of October 31, 1990. The foregoing is true except to the extent the planning area, air quality maintenance area, air basin, or urban growth boundary is further defined, e.g., by township, range and/or section. Such geographical descriptors remain a fixed part of the nonattainment boundaries irrespective of whether they are included in the planning area, air quality maintenance area, air basin, or urban growth boundary.

(3) The boundaries of PM–10 areas subsequently redesignated pursuant to section 107(d)(3) of the Act will be defined by the city, town, planning area, air quality maintenance area, air basin, or urban growth boundary in effect the date the designation is promulgated.

(d) For ozone and carbon monoxide (CO) areas the effective date(s) of air quality area designations and classifications are described as follows:

(1) For the portions of ozone and CO nonattainment areas that were designated nonattainment prior to the

date of enactment of the Clean Air Act Amendments of 1990 (preenactment), the effective date is November 15, 1990.

(2) For the portions of nonattainment areas that were designated attainment prior to November 15, 1990, and included as part of an area designated nonattainment prior to November 15, 1990, the effective date of the designation to nonattainment is November 15, 1990 for:

(i) Purposes of determining whether the portion of the nonattainment area is eligible for the 5-percent classification adjustment under section 181(a)(4) (ozone) or section 186(a)(3) (CO);

(ii) Triggering the process for determining the C/MSA boundary adjustment under section 107(d)(4)(A)(iv)-(v);

(iii) Determining the scope of a ''covered area'' under section 211 (k)(10)(D) and opt-in under section 211 (k)(6) for the reformulated gasoline requirement and for purposes of determining the baseline of the reductions needed to meet the requirement to reduce volatile organic compounds by 15 percent under section 181 (b)(1). For all other purposes the effective designation date is January 6, 1992 (except for the Towns of Blooming Grove, Chester, Highlands, Monroe, Tuxedo, Warwick, and Woodbury in Orange County, NY, and for Putnam County, NY, for which the effective date is January 15, 1992, and for the remainder of Orange County, NY, for which the effective date is April 21, 1994).

(3) For nonattainment areas designated attainment preenactment, and not included as part of any nonattainment area that was designated nonattainment preenactment, the effective date for all purposes is the date of the designation.

(e) Provisions for Early Action Compact Areas with Deferred Effective Date of Nonattainment Designation.

(1) *Definitions*. The following definitions apply for purposes of this subpart. Any term not defined herein shall have the meaning as defined in 40 CFR 51.100 and § 81.1

(i) *Early Action Compact*. The term ''early action compact'' (''compact'') means an agreement entered into on or before December 31, 2002, by—

(A) The Administrator;

(B) A State;

(C) An official of a county, parish, or town that—

(*1*) Is designated attainment for the 1-hour national ambient air quality standard for ozone;

(*2*) Has monitored data representing the most recent 3 years of quality-assured data that meets the 1-hour national ambient air quality standard for ozone; and

(*3*) May or may not be meeting the 8-hour national ambient air quality standard for ozone.

(ii) *State*. The term ''State'' has the meaning given the term in section 302 of the Clean Air Act (42 U.S.C. 7602).

(iii) *Area*. The term ''area'' means one or more counties, parishes, or towns that are participating in an early action compact.

(iv) *State Implementation Plan*. The term ''State implementation plan'' (''SIP'') means a plan required to be submitted to the Administrator by a State under section 110 of the Clean Air Act (42 U.S.C. 7410).

(v) *8-hour National Ambient Air Quality Standard* means the air quality standards under the Clean Air Act (42 U.S.C. 7401 *et seq.*) codified at 40 CFR 50.10.

(2) *What Are Early Action Compact Areas Required To Do?* (i) Not later than June 16, 2003, the local area shall—

(A) Submit to the Administrator a list identifying and describing the local control measures that are being considered for adoption during the local planning process; and

(B) Provide to the public clear information on the measures under consideration;

(ii) Not later than March 31, 2004, the local plan shall be completed and submitted to the State (with a copy of the local plan provided to the Administrator), which shall include—

(A) One or more locally adopted measures that are specific, quantified, and permanent and that, if approved by the Administrator, will be enforceable as part of the State implementation plan;

(B) Specific implementation dates for the adopted control measures;

(C) Sufficient documentation to ensure that the Administrator will be able to make a preliminary technical assessment based on control measures

demonstrating attainment of the 8-hour ozone national ambient air quality standard under the Clean Air Act not later than December 31, 2007;

(iii) Not later than December 31, 2004, the State shall submit to the Administrator a revision to the SIP consisting of the local plan, including all adopted control measures, and a demonstration that the applicable area will attain the 8-hour ozone national ambient air quality standard not later than December 31, 2007;

(iv) The area subject to the early action compact shall implement expeditiously, but not later than December 31, 2005, the local control measures that are incorporated in the SIP;

(v) Not later than June 30, 2006, the State shall submit to the Administrator a report describing the progress of the local area since December 31, 2005, that includes—

(A) A description of whether the area continues to implement its control measures, the emissions reductions being achieved by the control measures, and the improvements in air quality that are being made; and

(B) Sufficient information to ensure that the Administrator will be able to make a comprehensive assessment of air quality progress in the area; and

(vi) Not later than December 31, 2007, the area subject to a compact shall attain the 8-hour ozone national ambient air quality standard.

(3) *What Action Shall the Administrator Take To Promulgate Designations for an Early Action Compact Area That Does Not Meet (or That Contributes to Ambient Air Quality in a Nearby Area That Does Not Meet) the 8-Hour Ozone National Ambient Air Quality Standard?*—(i) *General.* With the exception of the Denver area subject to a compact and notwithstanding clauses (i) through (iv) of section 107(d)(1)(B) of the Clean Air Act (42 U.S.C. 7407(d)(1)(B)), the Administrator shall defer until April 15, 2008 the effective date of a nonattainment designation of any area subject to a compact that does not meet (or that contributes to ambient air quality in a nearby area that does not meet) the 8-hour ozone national ambient air quality standard if the Administrator determines that the area subject to a compact has met the requirements in paragraphs (e)(2)(i) through (iii) of this section. The Administrator shall defer until November 20, 2007 the effective date of a nonattainment designation of the Denver area.

(ii) *Requirements not met.* (A) If the Administrator determines that an area subject to a compact has not met the requirements in paragraphs (e)(2)(i) and (ii) of this section, the nonattainment designation will become effective June 15, 2004.

(B) Prior to expiration of the deferred effective date on April 15, 2008, if the Administrator determines that an area or the State subject to a compact has not met either requirement in paragraphs (e)(2)(iv) and (v) of this section, the nonattainment designation shall become effective as of the deferred effective date, unless EPA takes affirmative rulemaking action to further extend the deadline.

(C) If the Administrator determines that an area subject to a compact and/or State has not met any requirement in paragraphs (e)(2)(iv) through (vi) of this section, the nonattainment designation shall become effective as of the deferred effective date, unless EPA takes affirmative rulemaking action to further extend the deadline.

(D) Not later than 1 year after the effective date of the nonattainment designation, the State shall submit to the Administrator a revised attainment demonstration SIP.

(iii) All Requirements Met. If the Administrator determines that an area subject to a compact has met all of the requirements under subparagraph (e)(2) of this section—

(A) The Administrator shall designate the area as attainment under section 107(d)(1)(B) of the Clean Air Act; and

(B) The designation shall become effective no later than April 15, 2008.

(4) *What Action Shall the Administrator Take To Approve or Disapprove a Revision to the SIP Submitted by a Compact Area on or Before December 31, 2004?* (i) Not later than September 30, 2005, the Administrator shall take final action to approve or disapprove a revision to the SIP, in accordance with paragraph (e)(2)(iii) of this section, that is submitted by a compact area on or before December 31, 2004.

(ii) If the Administrator approves the SIP revision, the area will continue to be eligible for a deferral of the effective date of nonattainment designation.

(iii) If the Administrator disapproves the SIP revision, the nonattainment designation shall become effective on September 30, 2005.

(iv) If the area's nonattainment designation applies, the State shall comply with paragraph (e)(3)(ii)(D) of this section.

[56 FR 56709, Nov. 6, 1991, as amended at 57 FR 56766, Nov. 30, 1992; 59 FR 18970, Apr. 21, 1994; 63 FR 7274, Feb. 12, 1998; 69 FR 23875, Apr. 30, 2004; 70 FR 951, Jan. 5, 2005; 70 FR 50994, Aug. 29, 2005; 71 FR 69027, Nov. 29, 2006; 72 FR 35362, June 28, 2007; 72 FR 53955, Sept. 21, 2007; 74 FR 58701, Nov. 13, 2009]

§ 81.301 Alabama.

Alabama—TSP

Designated area	Does not meet primary standards	Does not meet secondary standards	Cannot be classified	Better than national standards
That portion of Etowah City within the western section of Gadsden	X	X		
Those portions of Jefferson City within central Birmingham and the area surrounding the Universal Atlas Cement plant	X	X		
Fairfield Area of Jefferson City [1]		X		
Bessemer and Irondale areas of Jefferson County[1]			X	
Rest of State				X

[1] See FEDERAL REGISTER of June 21, 1981.

Alabama—Sulfur Dioxide

Designated area	Does not meet primary standards	Does not meet secondary standards	Cannot be classified	Better than national standards
Statewide				X

Alabama—Carbon Monoxide

Designated Area	Designation		Classification	
	Date [1]	Type	Date [1]	Type
Statewide		Unclassifiable/Attainment		
Autauga County				
Baldwin County				
Barbour County				
Bibb County				
Blount County				
Bullock County				
Butler County				
Calhoun County				
Chambers County				
Cherokee County				
Chilton County				
Choctaw County				
Clarke County				
Clay County				
Cleburne County				
Coffee County				
Colbert County				
Conecuh County				
Coosa County				
Covington County				
Crenshaw County				
Dale County				
Dallas County				
De Kalb County				
Elmore County				
Escambia County				
Etowah County				
Fayette County				
Franklin County				

Alabama—Carbon Monoxide

Designated Area	Designation		Classification	
	Date [1]	Type	Date [1]	Type
Geneva County				
Greene County				
Hale County				
Henry County				
Houston County				
Ilman County				
Jackson County				
Jefferson County				
Lamar County				
Lauderdale County				
Lawrence County				
Lee County				
Limestone County				
Lowndes County				
Macon County				
Madison County				
Marengo County				
Marion County				
Marshall County				
Mobile County				
Monroe County				
Montgomery County				
Morgan County				
Perry County				
Pickens County				
Pike County				
Randolph County				
Russell County				
Shelby County				
St. Clair County				
Sumter County				
Talladega County				
Tallapoosa County				
Tuscaloosa County				
Walker County				
Washington County				
Wilcox County				
Winston County				

[1] This date is November 15, 1990, unless otherwise noted.

Alabama—Ozone (1-Hour Standard)[2]

Designated area	Designation		Classification	
	Date [1]	Type	Date [1]	Type
Birmingham Area:				
Jefferson County	4/12/04	Attainment		
Shelby County	4/12/04	Attainment		
Rest of State	.....	Unclassifiable/Attainment		
Autauga County				
Baldwin County				
Barbour County				
Bibb County				
Blount County				
Bullock County				
Butler County				
Calhoun County				
Chambers County				
Cherokee County				
Chilton County				
Choctaw County				
Clarke County				
Clay County				
Cleburne County				
Coffee County				
Colbert County				
Conecuh County				
Coosa County				
Covington County				
Crenshaw County				

Alabama—Ozone (1-Hour Standard)[2]

Designated area	Designation		Classification	
	Date [1]	Type	Date [1]	Type
Cullman County				
Dale County				
Dallas County				
De Kalb County				
Elmore County				
Escambia County				
Etowah County				
Fayette County				
Franklin County				
Geneva County				
Greene County				
Hale County				
Henry County				
Houston County				
Jackson County				
Lamar County				
Lauderdale County				
Lawrence County				
Lee County				
Limestone County				
Lowndes County				
Macon County				
Madison County				
Marengo County				
Marion County				
Marshall County				
Mobile County				
Monroe County				
Montgomery County				
Morgan County				
Perry County				
Pickens County				
Pike County				
Randolph County				
Russell County				
St. Clair County				
Sumter County				
Talladega County				
Tallapoosa County				
Tuscaloosa County				
Walker County				
Washington County				
Wilcox County				
Winston County				

[1] This date is October 18, 2000, unless otherwise noted.
[2] The 1-hour ozone standard is revoked effective June 15, 2005 for all of Alabama. The Birmingham area is a maintenance area for the 1-hour NAAQS for purposes of 40 CFR part 51 subpart X.

Alabama—NO_2 (1971 Annual Standard)

Designated area	Does not meet primary standards	Cannot be classified or better than national standards
Statewide		X

Alabama—NO^2 (2010 1-Hour Standard)

Designated area	Designation [a]	
	Date [1]	Type
Autauga County		Unclassifiable/Attainment.
Baldwin County		Unclassifiable/Attainment.
Barbour County		Unclassifiable/Attainment.
Bibb County		Unclassifiable/Attainment.
Blount County		Unclassifiable/Attainment.
Bullock County		Unclassifiable/Attainment.
Butler County		Unclassifiable/Attainment.
Calhoun County		Unclassifiable/Attainment.

Alabama—NO^2 (2010 1-Hour Standard)

Designated area	Designation [a]	
	Date [1]	Type
Chambers County		Unclassifiable/Attainment.
Cherokee County		Unclassifiable/Attainment.
Chilton County		Unclassifiable/Attainment.
Choctaw County		Unclassifiable/Attainment.
Clarke County		Unclassifiable/Attainment.
Clay County		Unclassifiable/Attainment.
Cleburne County		Unclassifiable/Attainment.
Coffee County		Unclassifiable/Attainment.
Colbert County		Unclassifiable/Attainment.
Conecuh County		Unclassifiable/Attainment.
Coosa County		Unclassifiable/Attainment.
Covington County		Unclassifiable/Attainment.
Crenshaw County		Unclassifiable/Attainment.
Cullman County		Unclassifiable/Attainment.
Dale County		Unclassifiable/Attainment.
Dallas County		Unclassifiable/Attainment.
De Kalb County		Unclassifiable/Attainment.
Elmore County		Unclassifiable/Attainment.
Escambia County		Unclassifiable/Attainment.
Fayette County		Unclassifiable/Attainment.
Franklin County		Unclassifiable/Attainment.
Geneva County		Unclassifiable/Attainment.
Greene County		Unclassifiable/Attainment.
Hale County		Unclassifiable/Attainment.
Henry County		Unclassifiable/Attainment.
Houston County		Unclassifiable/Attainment.
Jackson County		Unclassifiable/Attainment.
Jefferson County		Unclassifiable/Attainment.
Lamar County		Unclassifiable/Attainment.
Lauderdale County		Unclassifiable/Attainment.
Lawrence County		Unclassifiable/Attainment.
Lee County		Unclassifiable/Attainment.
Limestone County		Unclassifiable/Attainment.
Lowndes County		Unclassifiable/Attainment.
Macon County		Unclassifiable/Attainment.
Madison County		Unclassifiable/Attainment.
Marengo County		Unclassifiable/Attainment.
Marion County		Unclassifiable/Attainment.
Marshall County		Unclassifiable/Attainment.
Mobile County		Unclassifiable/Attainment.
Monroe County		Unclassifiable/Attainment.
Montgomery County		Unclassifiable/Attainment.
Morgan County		Unclassifiable/Attainment.
Perry County		Unclassifiable/Attainment.
Pickens County		Unclassifiable/Attainment.
Pike County		Unclassifiable/Attainment.
Randolph County		Unclassifiable/Attainment.
Russell County		Unclassifiable/Attainment.
Shelby County		Unclassifiable/Attainment.
St. Clair County		Unclassifiable/Attainment.
Sumter County		Unclassifiable/Attainment.
Talladega County		Unclassifiable/Attainment.
Tallapoosa County		Unclassifiable/Attainment.
Tuscaloosa County		Unclassifiable/Attainment.
Walker County		Unclassifiable/Attainment.
Washington County		Unclassifiable/Attainment.
Wilcox County		Unclassifiable/Attainment.
Winston County		Unclassifiable/Attainment.

[a] Includes Indian Country located in each county or area, except as otherwise specified.
[1] This date is 90 days after October 31, 2011, unless otherwise noted.

Alabama—Ozone (8-Hour Standard)

Designated area	Designation [a]		Category/classification	
	Date [1]	Type	Date [1]	Type
Birmingham, AL:				
Jefferson County	06/12/06	Attainment		
Shelby County	06/12/06	Attainment		
Rest of State		Unclassifiable/Attainment		

Alabama—Ozone (8-Hour Standard)

Designated area	Designation [a]		Category/classification	
	Date [1]	Type	Date [1]	Type
Autauga County				
Baldwin County				
Barbour County				
Bibb County				
Blount County				
Bullock County				
Butler County				
Calhoun County				
Chambers County				
Cherokee County				
Chilton County				
Choctaw County				
Clarke County				
Clay County				
Cleburne County				
Coffee County				
Colbert County				
Conecuh County				
Coosa County				
Covington County				
Crenshaw County				
Cullman County				
Dale County				
Dallas County				
DeKalb County				
Elmore County				
Escambia County				
Etowah County				
Fayette County				
Franklin County				
Geneva County				
Greene County				
Hale County				
Henry County				
Houston County				
Jackson County				
Lamar County				
Lauderdale County				
Lawrence County				
Lee County				
Limestone County				
Lowndes County				
Macon County				
Madison County				
Marengo County				
Marion County				
Marshall County				
Mobile County				
Monroe County				
Montgomery County				
Morgan County				
Perry County				
Pickens County				
Pike County				
Randolph County				
Russell County				
St. Clair County				
Sumter County				
Talladega County				
Tallapoosa County				
Tuscaloosa County				
Walker County				
Washington County				
Wilcox County				
Winston County				

[a] Includes Indian Country located in each county or area, except as otherwise specified.
[1] This date is June 15, 2004, unless otherwise noted.

Alabama—$PM_{2.5}$ (Annual NAAQS)

Designated area	Designation [a]	
	Date [1]	Type
Birmingham, AL:		
Jefferson County		Nonattainment.
Shelby County		Nonattainment.
Walker County (part)		Nonattainment.
The area described by U.S. Census 2000 block group identifiers 01–127–0214–5, 01–127–0215–4, and 01–127–0216–2		
Chattanooga, TN-GA:		
Jackson County (part)		Nonattainment.
The area described by U.S. Census 2000 block block group identifier 01–071–9503–1		
Columbus, GA-AL:		
Russell County		Unclassifiable/Attainment.
DeKalb County, AL:		
DeKalb County		Unclassifiable/Attainment.
Gadsden, AL:		
Etowah County		Unclassifiable/Attainment.
Rest of State:		
Autauga County		Unclassifiable/Attainment.
Baldwin County		Unclassifiable/Attainment.
Barbour County		Unclassifiable/Attainment.
Bibb County		Unclassifiable/Attainment.
Blount County		Unclassifiable/Attainment.
Bullock County		Unclassifiable/Attainment.
Butler County		Unclassifiable/Attainment.
Calhoun County		Unclassifiable/Attainment.
Chambers County		Unclassifiable/Attainment.
Cherokee County		Unclassifiable/Attainment.
Chilton County		Unclassifiable/Attainment.
Choctaw County		Unclassifiable/Attainment.
Clarke County		Unclassifiable/Attainment.
Clay County		Unclassifiable/Attainment.
Cleburne County		Unclassifiable/Attainment.
Coffee County		Unclassifiable/Attainment.
Colbert County		Unclassifiable/Attainment.
Conecuh County		Unclassifiable/Attainment.
Coosa County		Unclassifiable/Attainment.
Covington County		Unclassifiable/Attainment.
Crenshaw County		Unclassifiable/Attainment.
Cullman County		Unclassifiable/Attainment.
Dale County		Unclassifiable/Attainment.
Dallas County		Unclassifiable/Attainment.
Elmore County		Unclassifiable/Attainment.
Escambia County		Unclassifiable/Attainment.
Fayette County		Unclassifiable/Attainment.
Franklin County		Unclassifiable/Attainment.
Geneva County		Unclassifiable/Attainment.
Greene County		Unclassifiable/Attainment.
Hale County		Unclassifiable/Attainment.
Henry County		Unclassifiable/Attainment.
Houston County		Unclassifiable/Attainment.
Jackson County (remainder)		Unclassifiable/Attainment.
Lamar County		Unclassifiable/Attainment.
Lauderdale County		Unclassifiable/Attainment.
Lawrence County		Unclassifiable/Attainment.
Lee County		Unclassifiable/Attainment.
Limestone County		Unclassifiable/Attainment.
Lowndes County		Unclassifiable/Attainment.
Macon County		Unclassifiable/Attainment.
Madison County		Unclassifiable/Attainment.
Marengo County		Unclassifiable/Attainment.
Marion County		Unclassifiable/Attainment.
Marshall County		Unclassifiable/Attainment.
Mobile County		Unclassifiable/Attainment.
Monroe County		Unclassifiable/Attainment.
Montgomery County		Unclassifiable/Attainment.
Morgan County		Unclassifiable/Attainment.
Perry County		Unclassifiable/Attainment.
Pickens County		Unclassifiable/Attainment.
Pike County		Unclassifiable/Attainment.
Randolph County		Unclassifiable/Attainment.
St. Clair County		Unclassifiable/Attainment.

Alabama—$PM_{2.5}$ (Annual NAAQS)

Designated area	Designation [a]	
	Date [1]	Type
Sumter County		Unclassifiable/Attainment.
Talladega County		Unclassifiable/Attainment.
Tallapoosa County		Unclassifiable/Attainment.
Tuscaloosa County		Unclassifiable/Attainment.
Walker County (remainder)		Unclassifiable/Attainment.
Washington County		Unclassifiable/Attainment.
Wilcox County		Unclassifiable/Attainment.
Winston County		Unclassifiable/Attainment.

[a] Includes Indian Country located in each county or area, except as otherwise specified.
[1] This date is 90 days after January 5, 2005, unless otherwise noted.

Alabama—$PM_{2.5}$ [24-hour NAAQS]

Designation area	Designation for the 1997 NAAQS [a]		Designation for the 2006 NAAQS [a]	
	Date [1]	Type	Date [2]	Type
Birmingham, AL:				
Jefferson County		Unclassifiable/Attainment.		Nonattainment.
Shelby County		Unclassifiable/Attainment.		Nonattainment.
Walker County (part)		Unclassifiable/Attainment.		Nonattainment.
The area described by U.S. Census 2000 block group identifiers 01–127–0214–5, 01–127–0215–4, and 01–127–0216–2.				
Etowah County		Unclassifiable/Attainment.		Unclassifiable.
Rest of State:				
Autauga County		Unclassifiable/Attainment.		Unclassifiable/Attainment.
Baldwin County		Unclassifiable/Attainment.		Unclassifiable/Attainment.
Barbour County		Unclassifiable/Attainment.		Unclassifiable/Attainment.
Bibb County		Unclassifiable/Attainment.		Unclassifiable/Attainment.
Blount County		Unclassifiable/Attainment.		Unclassifiable/Attainment.
Bullock County		Unclassifiable/Attainment.		Unclassifiable/Attainment.
Butler County		Unclassifiable/Attainment.		Unclassifiable/Attainment.
Calhoun County		Unclassifiable/Attainment.		Unclassifiable/Attainment.
Chambers County		Unclassifiable/Attainment.		Unclassifiable/Attainment.
Cherokee County		Unclassifiable/Attainment.		Unclassifiable/Attainment.
Chilton County		Unclassifiable/Attainment.		Unclassifiable/Attainment.
Choctaw County		Unclassifiable/Attainment.		Unclassifiable/Attainment.
Clarke County		Unclassifiable/Attainment.		Unclassifiable/Attainment.
Clay County		Unclassifiable/Attainment.		Unclassifiable/Attainment.
Cleburne County		Unclassifiable/Attainment.		Unclassifiable/Attainment.
Coffee County		Unclassifiable/Attainment.		Unclassifiable/Attainment.
Colbert County		Unclassifiable/Attainment.		Unclassifiable/Attainment.
Conecuh County		Unclassifiable/Attainment.		Unclassifiable/Attainment.
Coosa County		Unclassifiable/Attainment.		Unclassifiable/Attainment.

Alabama—$PM_{2.5}$ [24-hour NAAQS]

Designation area	Designation for the 1997 NAAQS [a]		Designation for the 2006 NAAQS [a]	
	Date [1]	Type	Date [2]	Type
Covington County		Unclassifiable/Attainment.		Unclassifiable/Attainment.
Crenshaw County		Unclassifiable/Attainment.		Unclassifiable/Attainment.
Cullman County		Unclassifiable/Attainment.		Unclassifiable/Attainment.
Dale County		Unclassifiable/Attainment.		Unclassifiable/Attainment.
Dallas County		Unclassifiable/Attainment.		Unclassifiable/Attainment.
DeKalb County		Unclassifiable/Attainment.		Unclassifiable/Attainment.
Elmore County		Unclassifiable/Attainment.		Unclassifiable/Attainment.
Escambia County		Unclassifiable/Attainment.		Unclassifiable/Attainment.
Fayette County		Unclassifiable/Attainment.		Unclassifiable/Attainment.
Franklin County		Unclassifiable/Attainment.		Unclassifiable/Attainment.
Geneva County		Unclassifiable/Attainment.		Unclassifiable/Attainment.
Greene County		Unclassifiable/Attainment.		Unclassifiable/Attainment.
Hale County		Unclassifiable/Attainment.		Unclassifiable/Attainment.
Henry County		Unclassifiable/Attainment.		Unclassifiable/Attainment.
Houston County		Unclassifiable/Attainment.		Unclassifiable/Attainment.
Jackson County		Unclassifiable/Attainment.		Unclassifiable/Attainment.
Lamar County		Unclassifiable/Attainment.		Unclassifiable/Attainment.
Lauderdale County		Unclassifiable/Attainment.		Unclassifiable/Attainment.
Lawrence County		Unclassifiable/Attainment.		Unclassifiable/Attainment.
Lee County		Unclassifiable/Attainment.		Unclassifiable/Attainment.
Limestone County		Unclassifiable/Attainment.		Unclassifiable/Attainment.
Lowndes County		Unclassifiable/Attainment.		Unclassifiable/Attainment.
Macon County		Unclassifiable/Attainment.		Unclassifiable/Attainment.
Madison County		Unclassifiable/Attainment.		Unclassifiable/Attainment.
Marengo County		Unclassifiable/Attainment.		Unclassifiable/Attainment.
Marion County		Unclassifiable/Attainment.		Unclassifiable/Attainment.
Marshall County		Unclassifiable/Attainment.		Unclassifiable/Attainment.
Mobile County		Unclassifiable/Attainment.		Unclassifiable/Attainment.
Monroe County		Unclassifiable/Attainment.		Unclassifiable/Attainment.
Montgomery County		Unclassifiable/Attainment.		Unclassifiable/Attainment.
Morgan County		Unclassifiable/Attainment.		Unclassifiable/Attainment.
Perry County		Unclassifiable/Attainment.		Unclassifiable/Attainment.
Pickens County		Unclassifiable/Attainment.		Unclassifiable/Attainment.
Pike County		Unclassifiable/Attainment.		Unclassifiable/Attainment.
Randolph County		Unclassifiable/Attainment.		Unclassifiable/Attainment.

Alabama—$PM_{2.5}$ [24-hour NAAQS]

Designation area	Designation for the 1997 NAAQS [a]		Designation for the 2006 NAAQS [a]	
	Date [1]	Type	Date [2]	Type
Russell County		Unclassifiable/Attainment.		Unclassifiable/Attainment.
St. Clair County		Unclassifiable/Attainment.		Unclassifiable/Attainment.
Sumter County		Unclassifiable/Attainment.		Unclassifiable/Attainment.
Talladega County		Unclassifiable/Attainment.		Unclassifiable/Attainment.
Tallapoosa County		Unclassifiable/Attainment.		Unclassifiable/Attainment.
Tuscaloosa County		Unclassifiable/Attainment.		Unclassifiable/Attainment.
Walker County (remainder)		Unclassifiable/Attainment.		Unclassifiable/Attainment.
Washington County		Unclassifiable/Attainment.		Unclassifiable/Attainment.
Wilcox County		Unclassifiable/Attainment.		Unclassifiable/Attainment.
Winston County		Unclassifiable/Attainment.		Unclassifiable/Attainment.

[a] Includes Indian Country located in each county or area, except as otherwise specified.
[1] This date is 90 days after January 5, 2005, unless otherwise noted.
[2] This date is 30 days after November 13, 2009, unless otherwise noted.

Alabama—1978 Lead NAAQS

Designated area	Designation		Classification	
	Date	Type	Date	Type
Statewide	3/7/95	Attainment		

Alabama—2008 Lead NAAQS

Designated area	Designation for the 2008 NAAQS [a]	
	Date [1]	Type
Troy, AL:		
Pike County (part) Area is bounded by a 0.8 mile radius from a center point at latitude 31.78627106 North and longitude 85.97862228 West, which fully includes the Sanders Lead facility.	12/31/10	Nonattainment.
Rest of State		Unclassifiable/Attainment.

[a] Includes Indian Country located in each county or area, except as otherwise specified.
[1] December 31, 2011 unless otherwise noted.

[43 FR 8964, Mar. 3, 1978]

EDITORIAL NOTE: For FEDERAL REGISTER citations affecting §81.301 see the List of CFR Sections Affected, which appears in the Finding Aids section of the printed volume and at *www.fdsys.gov*.

EFFECTIVE DATE NOTE: At 77 FR 30095, May 21, 2012, §81.301 was amended by revising the table heading for ''Alabama—Ozone (8-Hour Standard)'' to read ''Alabama—1997 8-Hour Ozone NAAQS (Primary and Secondary)'' and by adding a new table entitled ''Alabama—2008 8-Hour Ozone NAAQS (Primary and Secondary)'' following the newly designated table '' Alabama—1997 8-Hour Ozone NAAQS (Primary and Secondary)'', effective July 20, 2012. For the convenience of the user, the added text is set forth as follows:

§81.301 Alabama.

* * * * *

ALABAMA—2008 8-HOUR OZONE NAAQS

[Primary and secondary]

Designated area [1]	Designation		Classification	
	Date [2]	Type	Date [2]	Type
Autauga County		Unclassifiable/Attainment		
Baldwin County		Unclassifiable/Attainment		
Barbour County		Unclassifiable/Attainment		
Bibb County		Unclassifiable/Attainment		
Blount County		Unclassifiable/Attainment		
Bullock County		Unclassifiable/Attainment		
Butler County		Unclassifiable/Attainment		
Calhoun County		Unclassifiable/Attainment		
Chambers County		Unclassifiable/Attainment		
Cherokee County		Unclassifiable/Attainment		
Chilton County		Unclassifiable/Attainment		
Choctaw County		Unclassifiable/Attainment		
Clarke County		Unclassifiable/Attainment		
Clay County		Unclassifiable/Attainment		
Cleburne County		Unclassifiable/Attainment		
Coffee County		Unclassifiable/Attainment		
Colbert County		Unclassifiable/Attainment		
Conecuh County		Unclassifiable/Attainment		
Coosa County		Unclassifiable/Attainment		
Covington County		Unclassifiable/Attainment		
Crenshaw County		Unclassifiable/Attainment		
Cullman County		Unclassifiable/Attainment		
Dale County		Unclassifiable/Attainment		
Dallas County		Unclassifiable/Attainment		
De Kalb County		Unclassifiable/Attainment		
Elmore County		Unclassifiable/Attainment		
Escambia County		Unclassifiable/Attainment		
Fayette County		Unclassifiable/Attainment		
Franklin County		Unclassifiable/Attainment		
Geneva County		Unclassifiable/Attainment		
Greene County		Unclassifiable/Attainment		
Hale County		Unclassifiable/Attainment		
Henry County		Unclassifiable/Attainment		
Houston County		Unclassifiable/Attainment		
Jackson County		Unclassifiable/Attainment		
Jefferson County		Unclassifiable/Attainment		
Lamar County		Unclassifiable/Attainment		
Lauderdale County		Unclassifiable/Attainment		
Lawrence County		Unclassifiable/Attainment		
Lee County		Unclassifiable/Attainment		
Limestone County		Unclassifiable/Attainment		
Lowndes County		Unclassifiable/Attainment		
Macon County		Unclassifiable/Attainment		
Madison County		Unclassifiable/Attainment		
Marengo County		Unclassifiable/Attainment		
Marion County		Unclassifiable/Attainment		
Marshall County		Unclassifiable/Attainment		
Mobile County		Unclassifiable/Attainment		
Monroe County		Unclassifiable/Attainment		
Montgomery County		Unclassifiable/Attainment		
Morgan County		Unclassifiable/Attainment		
Perry County		Unclassifiable/Attainment		
Pickens County		Unclassifiable/Attainment		
Pike County		Unclassifiable/Attainment		
Randolph County		Unclassifiable/Attainment		
Russell County		Unclassifiable/Attainment		
Shelby County		Unclassifiable/Attainment		
St. Clair County		Unclassifiable/Attainment		
Sumter County		Unclassifiable/Attainment		
Talladega County		Unclassifiable/Attainment		
Tallapoosa County		Unclassifiable/Attainment		
Tuscaloosa County		Unclassifiable/Attainment		
Walker County		Unclassifiable/Attainment		
Washington County		Unclassifiable/Attainment		
Wilcox County		Unclassifiable/Attainment		
Winston County		Unclassifiable/Attainment		

[1] Includes any Indian country in each county or area, unless otherwise specified.
[2] This date is July 20, 2012, unless otherwise noted.

* * * * *

§ 81.302 Alaska.

Alaska—TSP

Designated area	Does not meet primary standards	Does not meet secondary standards	Cannot be classified	Better than national standards
Cook Inlet Intrastate AQCR 8				X
Northern Alaska Intrastate AQCR 9				X
South Central Alaska Intrastate AQCR 10				X
Southeastern Alaska Intrastate AQCR 11				X

Alaska—SO_2

Designated area	Does not meet primary standards	Does not meet secondary standards	Cannot be classified	Better than national standards
Cook Inlet Intrastate AQCR 8				X
Northern Alaska Intrastate AQCR 9				X
South Central Alaska Intrastate AQCR 10				X
Southeastern Alaska Intrastate AQCR 11				X

Alaska—Carbon Monoxide

Designated Area	Designation		Classification	
	Date [1]	Type	Date [1]	Type
Anchorage Area—Anchorage Election District (part), Anchorage nonattainment area boundary: The Anchorage Nonattainment Area is contained within the boundary described as follows: Beginning at a point on the centerline of the New Seward Highway five hundred (500) feet of the centerline of O'Malley Road; thence, Westerly along a line five hundred (500) feet south of and parallel to the centerline of O'Malley Road and its westerly extension thereof to a point on the mean high tide line of the Turnagain Arm; thence, Northeasterly along the mean high tide line to a point five hundred (500) feet west of the southerly extension of the centerline of Sand Lake Road; thence, Northerly along a line five hundred (500) feet west of and parallel to the southerly extension of the centerline of Sand Lake Road to a point on the southerly boundary of the International Airport property; thence, Westerly along said property line of the International Airport to an angle point in said property line; thence, Easterly, along said property line and its easterly extension thereof to a point five hundred (500) feet west of the southerly extension of the centerline of Wisconsin Street; thence, Northerly along said line to a point on the mean high tide line of the Knik Arm; thence, Northeasterly along the mean high tide line to a point on a line parallel and five hundred (500) feet north of the	July 23, 2004	Attainment		

Alaska—Carbon Monoxide

Designated Area	Designation		Classification	
	Date [1]	Type	Date [1]	Type
centerline of Thompson Street and the westerly extension thereof; thence, Easterly along said line to a point five hundred (500) feet east of Boniface Parkway; thence, Southerly along a line five hundred (500) feet east of and parallel to the centerline of Boniface Parkway to a point five hundred (500) feet north of the Glenn Highway; thence, Easterly and northeasterly along a line five hundred (500) feet north of and parallel to the centerline of the Glenn Highway to a point five hundred (500) feet east of the northerly extension of the centerline of Muldoon Road; thence, Southerly along a line five hundred (500) feet east of and parallel to the centerline of Muldoon Road and continuing southwesterly on a line of curvature five hundred (500) feet southeasterly of the centerline of curvature where Muldoon Road becomes Tudor Road to a point five hundred (500) feet south off the centerline of Tudor Road; thence, Westerly along a line five hundred (500) feet south of the centerline of Tudor Road to a point five hundred (500) feet east of the centerline to Lake Otis Parkway; thence, Westerly along a line five hundred (500) feet south of the centerline of O'Malley Road, ending at the centerline of the New Seward Highway, which is the point of the beginning				
Fairbanks Area	September 27, 2004	Attainment		
Fairbanks Election District (part).				
Fairbanks nonattainment area boundary:.				
1. Township 1 South, Range 1 West, Sections 2 through 23, the portion of Section 1 west of the Fort Wainwright military reservation boundary and the portions of Section 24 north of the Old Richardson Highway and west of the military reservation boundary, also, Township 1 South, Range 2 West, Sections 13 and 24, the portion of Section 12 southwest of Chena Pump Road and the portions of Sections 14 and 23 southeast of the Chena river. Also, Township 1 South, Range 1 East, Sections 7, 8, and 18 and the portion of Section 19 north of the Richardson Highway. (Fairbanks and Ft. Wainwright).				
2. Township 2 South, Range 2 East, the portions of Sections 9 and 10 southwest of the Richardson Highway. (North Pole)				
AQCR 008 Cook Inlet Intrastate (Remainder of)		Unclassifiable/Attainment		
Kenai Penninsula Election District				
Matanuska-Susitna Election District				
Seward Election District				
AQCR 009 Northern Alaska Intrastate (Remainder of).		Unclassifiable/Attainment		
Barrow Election District				
Fairbanks N. Star Borough				
Area other than portion of Fairbanks urban area designated Nonattainment				
Kobuk Election District				
Nome Election District				
North Slope Election District				
Northwest Arctic Borough				
Southeast Fairbanks Election District				
Upper Yukon Election District				

Alaska—Carbon Monoxide

Designated Area	Designation		Classification	
	Date [1]	Type	Date [1]	Type
Yukon-Koyukuk Election District				
AQCR 010 South Central Alaska Intrastate (Remainder of).	.....	Unclassifiable/Attainment		
Aleutian Islands Election District				
Aleutians East Borough				
Aleutians West Census				
Anchorage Election District				
Area other than portion of Anchorage urban area designated Nonattainment				
Bethel Election District				
Bristol Bay Borough Election District				
Bristol Bay Election District				
Cordova-McCarthy Election District				
Dillingham Election District				
Kodiak Island Election District				
Kuskokwim Election District				
Lake And Peninsula Brg				
Valdez-Cordova Election District				
Wade Hampton Election District				
AQCR 11 Southeastern Alaska Intrastate	.....	Unclassifiable/Attainment		
Angoon Election District				
Haines Election District				
Juneau Election District				
Ketchikan Election District				
Outer Kethcikan Election District				
Prince Of Wales Election District				
Sitka Election District				
Skagway-Yakutat Election District				
Wrangell-Petersburg Election District				

[1] This date is November 15, 1990, unless otherwise noted.

Alaska—Ozone (1-Hour Standard)[2]

Designated area	Designation		Classification	
	Date [1]	Type	Date [1]	Type
AQCR 08 Cook Inlet Intrastate	.....	Unclassifiable/Attainment		
Anchorage Election District				
Kenai Penninsula Election District				
Matanuska-Susitna Election District				
Seward Election District				
AQCR 09 Northern Alaska Intrastate	.....	Unclassifiable/Attainment		
Barrow Election District				
Denali Borough				
Fairbanks Election District				
Kobuk Election District				
Nome Election District				
North Slope Election District				
Northwest Arctic Borough				
Southeast Fairbanks Election District				
Upper Yukon Election District				
Yukon-Koyukuk Election District				
AQCR 10 South Central Alaska Intrastate	.....	Unclassifiable/Attainment		
Aleutian Islands Election District				
Aleutians East Borough				
Aleutians West Census				
Bethel Election District				
Bristol Bay Borough Election District				
Bristol Bay Election District				
Cordova-McCarthy Election District				
Dillingham Election District				
Kodiak Island Election District				
Kuskokwim Election District				
Lake and Peninsula Borough				
Valdez-Cordova Election District				
Wade Hampton Election District				
AQCR 11 Southeastern Alaska Intrastate	.....	Unclassifiable/Attainment		
Angoon Election District				

Alaska—Ozone (1-Hour Standard)[2]

Designated area	Designation		Classification	
	Date [1]	Type	Date [1]	Type
Haines Election District				
Juneau Election District				
Ketchikan Election District				
Outer Kethcikan Election District				
Prince Of Wales Election District				
Sitka Election District				
Skagway-Yakutat Election District				
Wrangell-Petersburg Election District				

[1] This date is October 18, 2000, unless otherwise noted.
[2] The 1-hour ozone standard is revoked effective June 15, 2005 for all areas in Alaska.

Alaska—PM–10

Designated Area	Designation		Classification	
	Date	Type	Date	Type
Anchorage				
Community of Eagle River	11/15/90	Nonattainment	11/15/90	Moderate
Juneau				
City of Juneau:	11/15/90	Nonattainment	11/15/90	Moderate
Mendenhall Valley area				
Rest of State	11/15/90	Unclassifiable		

Alaska—NO_2 (1971 Annual Standard)

Designated area	Does not meet primary standards	Cannot be classified or better than national standards
Cook Inlet Intrastate AQCR 8		X
Northern Alaska Intrastate AQCR 9		X
South Central Alaska Intrastate AQCR 10		X
Southeastern Alaska Intrastate AQCR 11		X

Alaska—NO_2 (2010 1-Hour Standard)

Designated area	Designation [a]	
	Date [1]	Type
State of Alaska		Unclassifiable/Attainment.

[a] Includes Indian Country located in each county or area, except as otherwise specified.
[1] This date is 90 days after October 31, 2011, unless otherwise noted.

Alaska—Ozone (8-Hour Standard)

Designated area	Designation [a]		Category/classification	
	Date [1]	Type	Date [1]	Type
AQCR 08 Cook Inlet Intrastate		Unclassifiable/Attainment		
Anchorage Borough				
Kenai Peninsula Borough				
Matanuska-Susitna Borough				
AQCR 09 Northern Alaska Intrastate		Unclassifiable/Attainment		
Denali Borough				
Fairbanks North Star Borough				
Nome Census Area				
North Slope Borough				
Northwest Arctic Borough				
Southeast Fairbanks Census Area				
Yukon-Koyukuk Census Area				
AQCR 10 South Central Alaska Intrastate		Unclassifiable/Attainment		
Aleutians East Borough				
Aleutians West Census Area				
Bethel Census Area				
Bristol Bay Borough				
Dillingham Census Area				
Kodiak Island Borough				
Lake and Peninsula Borough				
Valdez-Cordova Census Area				

Alaska—Ozone (8-Hour Standard)

Designated area	Designation [a]		Category/classification	
	Date [1]	Type	Date [1]	Type
Wade Hampton Census Area AQCR 11 Southeastern Alaska Intrastate Haines Borough Juneau Borough Ketchikan Gateway Borough Prince of Wales-Outer Ketchikan Census Area Sitka Borough Skagway-Hoonah-Angoon Census Area Wrangell-Petersburg Census Area Yakutat Borough	.....	Unclassifiable/Attainment		

[a] Includes Indian Country located in each county or area, except as otherwise specified.
[1] This date is June 15, 2004, unless otherwise noted.

Alaska—$PM_{2.5}$ [24-hour NAAQS]

Designated area	Designation [a]	
	Date [1]	Type
AQCR 08 Cook Inlet Intrastate:		
Anchorage Borough	.....	Unclassifiable/Attainment.
Kenai Peninsula Borough	.....	Unclassifiable/Attainment.
Matanuska-Susitna Borough	.....	Unclassifiable/Attainment.
AQCR 09 Northern Alaska Intrastate:		
Denali Borough	.....	Unclassifiable/Attainment.
Fairbanks North Star Borough	.....	Unclassifiable/Attainment.
Nome Census Area	.....	Unclassifiable/Attainment.
North Slope Borough	.....	Unclassifiable/Attainment.
Northwest Arctic Borough	.....	Unclassifiable/Attainment.
Southeast Fairbanks Census Area	.....	Unclassifiable/Attainment.
Yukon-Koyukuk Census Area	.....	Unclassifiable/Attainment.
AQCR 10 South Central Alaska Intrastate:		
Aleutians East Borough	.....	Unclassifiable/Attainment.
Aleutians West Census Area	.....	Unclassifiable/Attainment.
Bethel Census Area	.....	Unclassifiable/Attainment.
Bristol Bay Borough	.....	Unclassifiable/Attainment.
Dillingham Census Area	.....	Unclassifiable/Attainment.
Kodiak Island Borough	.....	Unclassifiable/Attainment.
Lake and Peninsula Borough	.....	Unclassifiable/Attainment.
Valdez-Cordova Census Area	.....	Unclassifiable/Attainment.
Wade Hampton Census Area	.....	Unclassifiable/Attainment.
AQCR 11 Southeastern Alaska Intrastate:		
Haines Borough	.....	Unclassifiable/Attainment.
Juneau Borough	.....	Unclassifiable/Attainment.
Ketchikan Gateway Borough	.....	Unclassifiable/Attainment.
Prince of Wales-Outer Ketchikan Census	.....	Unclassifiable/Attainment.
Sitka Borough	.....	Unclassifiable/Attainment.
Skagway-Hoonah-Angoon Census Area	.....	Unclassifiable/Attainment.
Wrangell-Petersburg Census Area	.....	Unclassifiable/Attainment.
Yakutat Borough	.....	Unclassifiable/Attainment.

[a] Includes Indian Country located in each county or area, except as otherwise specified.
[1] This date is 90 days after January 5, 2005, unless otherwise noted.

Alaska—$PM_{2.5}$ [24-hour NAAQS]

Designated area	Designation for the 1997 NAAQS [a]		Designation for the 2006 NAAQS [a]	
	Date [1]	Type	Date [2]	Type
Fairbanks, AK: AQCR 09 Northern Alaska Intrastate: Fairbanks North Star Borough (part) The following townships and ranges:	.....	Unclassifiable/Attainment.	.....	Nonattainment.

Alaska—$PM_{2.5}$ [24-hour NAAQS]

Designated area	Designation for the 1997 NAAQS [a]		Designation for the 2006 NAAQS [a]	
	Date [1]	Type	Date [2]	Type
—MTRS F001N001—All Sections; —MTRS F001N001E—Sections 2–11, 14–23, 26–34; —MTRS F001N002—Sections 1–5, 8–17, 20–29, 32–36; —MTRS F001S001E—Sections 1, 3–30, 32–36; —MTRS F001S001W—Sections 1–30; —MTRS F001S002E—Sections 6–8, 17–20, 29–36; —MTRS F001S002W—Sections 1–5, 8–17, 20–29, 32–33; —MTRS F001S003E—Sections 31–32; —MTRS F002N001E—Sections 31–35; —MTRS F002N001—Sections 28, 31–36; —MTRS F002N002—Sections 32–33, 36; —MTRS F002S001E—Sections 1–2; —MTRS F002S002E—Sections 1–17, 21–24; —MTRS F002S003E—Sections 5–8, 18.				
Rest of State:				
AQCR 08 Cook Inlet Intrastate:				
Anchorage Borough		Unclassifiable/Attainment.		Unclassifiable/Attainment.
Kenai Peninsula Borough		Unclassifiable/Attainment.		Unclassifiable/Attainment.
Matanuska-Susitna Borough		Unclassifiable/Attainment.		Unclassifiable/Attainment.
AQCR 09 Northern Alaska Intrastate:				
Denali Borough		Unclassifiable/Attainment.		Unclassifiable/Attainment.
Fairbanks North Star Borough (remainder).		Unclassifiable/Attainment.		Unclassifiable/Attainment.
Nome Census Area		Unclassifiable/Attainment.		Unclassifiable/Attainment.
North Slope Borough		Unclassifiable/Attainment.		Unclassifiable/Attainment.
Northwest Arctic Borough		Unclassifiable/Attainment.		Unclassifiable/Attainment.
Southeast Fairbanks Census Area		Unclassifiable/Attainment.		Unclassifiable/Attainment.
Yukon-Koyukuk Census Area		Unclassifiable/Attainment.		Unclassifiable/Attainment.
AQCR 10 South Central Alaska Intrastate:				
Aleutians East Borough		Unclassifiable/Attainment.		Unclassifiable/Attainment.
Aleutians West Census Area		Unclassifiable/Attainment.		Unclassifiable/Attainment.
Bethel Census Area		Unclassifiable/Attainment.		Unclassifiable/Attainment.
Bristol Bay Borough		Unclassifiable/Attainment.		Unclassifiable/Attainment.
Dillingham Census Area		Unclassifiable/Attainment.		Unclassifiable/Attainment.
Kodiak Island Borough		Unclassifiable/Attainment.		Unclassifiable/Attainment.
Lake and Peninsula Borough		Unclassifiable/Attainment.		Unclassifiable/Attainment.
Valdez-Cordova Census Area		Unclassifiable/Attainment.		Unclassifiable/Attainment.

Alaska—$PM_{2.5}$ [24-hour NAAQS]

Designated area	Designation for the 1997 NAAQS [a]		Designation for the 2006 NAAQS [a]	
	Date [1]	Type	Date [2]	Type
Wade Hampton Census Area		Unclassifiable/Attainment.		Unclassifiable/Attainment.
AQCR 11 Southeastern Alaska Intrastate:				
Haines Borough		Unclassifiable/Attainment.		Unclassifiable/Attainment.
Juneau Borough		Unclassifiable/Attainment.		Unclassifiable/Attainment.
Ketchikan Gateway Borough		Unclassifiable/Attainment.		Unclassifiable/Attainment.
Prince of Wales-Outer Ketchikan Census.		Unclassifiable/Attainment.		Unclassifiable/Attainment.
Sitka Borough		Unclassifiable/Attainment.		Unclassifiable/Attainment.
Skagway-Hoonah-Angoon Census Area.		Unclassifiable/Attainment.		Unclassifiable/Attainment.
Wrangell-Petersburg Census Area		Unclassifiable/Attainment.		Unclassifiable/Attainment.
Yakutat Borough		Unclassifiable/Attainment.		Unclassifiable/Attainment.

[a] Includes Indian Country located in each county or area, except as otherwise specified.
[1] This date is 90 days after January 5, 2005, unless otherwise noted.
[2] This date is 30 days after November 13, 2009, unless otherwise noted.

Alaska—2008 Lead NAAQS

Designated area	Designation for the 2008 NAAQS [a]	
	Date [1]	Type
Whole State		Unclassifiable/Attainment.

[a] Includes Indian Country located in each county or area, except as otherwise specified.
[1] December 31, 2011 unless otherwise noted.

[54 FR 27343, June 29, 1989]

EDITORIAL NOTE: For FEDERAL REGISTER citations affecting §81.302 see the List of CFR Sections Affected, which appears in the Finding Aids section of the printed volume and at *www.fdsys.gov*.

EFFECTIVE DATE NOTE: At 77 FR 30096, May 21, 2012, §81.302 was amended by revising the table heading for ''Alaska—Ozone (8-Hour Standard)'' to read ''Alaska—1997 8-Hour Ozone NAAQS (Primary and Secondary)'' adding a new table entitled ''Alaska—2008 8-Hour Ozone NAAQS (Primary and Secondary)'' following the newly designated table ''Alaska—1997 8-Hour Ozone NAAQS (Primary and Secondary)'', effective July 20, 2012. For the convenience of the user, the added text is set forth as follows:

§81.302 Alaska.

* * * * *

ALASKA—2008 8-HOUR OZONE NAAQS

[Primary and secondary]

Designated area	Designation		Classification	
	Date [1]	Type	Date [1]	Type
Statewide and Any Areas of Indian Country		Unclassifiable/Attainment		

[1] This date is July 20, 2012, unless otherwise noted.

* * * * *

§ 81.303 Arizona.

Arizona—TSP

Designated area	Does not meet primary standards	Does not meet secondary standards	Cannot be classified	Better than national standards
Ajo				
T12S, R6W	[1] X			
Douglas:				
T24S, R27E	[1] X			
T24S, R28E	[1] X			
Hayden:				
T5S, R15E	[1] X			
Joseph City:				
T18N, R19E	[1] X			
Miami:				
T1N, R15E	[1] X			
Page:				
T41N, R9E				X
Paul Spur:				
T24S, R26E	[1] X			
Phoenix: That portion of Maricopa County known as the Maricopa Association of Governments (MAG) Urban Planning Area	[1] X			
Tucson: That portion within Pima County of the area described by connecting the following geographical coordinates moving in a clockwise manner:				
LAT(N) and LON(W):				
32°38.5′ 111°24.0′.				
32°26.5′ 110°47.5′.				
32°12.5′ 110°32.5′.				
31°49.5′ 110°25.5′.				
31°42.0′ 110°50.5′.				
31°52.5′ 111°12.5′.				
32°24.5′ 111°29.0min;	[1] X			
San Manuel:				
T10S, R16E				X
T10S, R17E				X
Morenci: T4S, R29E	[1] X			
Rest of State				[1] X

[1] EPA designation replaces State designation.

Arizona—SO_2

Designated area	Does not meet primary standards	Does not meet secondary standards	Cannot be classified	Better than national standards
Ajo:				
(T11–13S, R5W–R6W)				X
Douglas:				
T23S, R27E				x
T24S, R27E				x
T24S, R28E				x
T23S, R26E			x	
T23S, R28E			x	
T24S, R26E			x	
Hayden:				
T4S, R14E	X			
T4S, R15E	X			
T4S, R16E	X			
T5S, T14E	X			
T5S, R15E	X			
T5S, R16E	X			
T6S, R14E	X			
T6S, R15E	X			
T6S, R16E	X			
T4S, R13E			X	
T4S, R17E			X	
T5S, R13E			X	
T5S, R17E			X	
T6S, R13E			X	
T6S, R17E			X	

Arizona—SO_2

Designated area	Does not meet primary standards	Does not meet secondary standards	Cannot be classified	Better than national standards
Miami:				
T2N, R14E				X
T2N, R15E				X
T1N, R13E [1]				X
T1N, R14E				X
T1N, R15E				X
T1S, R14E [1]				X
T1S, R14½E				X
T1S, R15E				X
T2N, R13E [1]			X	
T2N, R16E			X	
T1N, R16E			X	
T1S, R13E [1]			X	
T1S, R16E			X	
T2S, R14E [1]			X	
T2S, R15E			X	
Morenci:				
T3S, R28E [2]				x
T3S, R29E				x
T3S, R30E				x
T4S, R28E [2]				x
T4S, R29E				x
T4S, R30E				x
T5S, R28E [2]				x
T5S, R29E [2]				x
T5S, R30E			x	
San Manuel:				
T8S, R16E				X
T8S, R17E				X
T8S, R18E				X
T9S, R15E				X
T9S, R16E				X
T9S, R17E				X
T9S, R18E				X
T10S, R15E				X
T10S, R16E				X
T10S, R17E				X
T11S, R16E				X
T10S, R18E				X
T11S, R17E				X
T12S, R16E				X
T12S, R17E				X
Page:				
T41N, R9E			[3] X	
Rest of State				X

[1] Only that portion in Gila County.
[2] Only that portion in Greenlee County.
[3] EPA designation replaces State designation.

Arizona—Carbon Monoxide

Designated area	Designation		Classification	
	Date	Type	Date	Type
Phoenix Area:				
Maricopa County (part)	4/8/05	Attainment.		
Phoenix nonattainment area boundary:				
1. Commencing at a point which is the intersection of the eastern line of Range 7 East, Gila and Salt River Baseline and Meridian, and the southern line of point Township 2 South, said point is the southeastern corner of Maricopa Association of Governments Urban Planning Area, which is the point of beginning;				

Arizona—Carbon Monoxide

Designated area	Designation		Classification	
	Date	Type	Date	Type
2. thence, proceed northerly along the eastern line of Range 7 East, which is the common boundary between Maricopa and Pinal Counties, as described in Arizona Revised Statutes Section 11–109, to a point where the eastern line of Range 7 East intersects the northern line of Township 1 North, said point is also the intersection of the Maricopa County Line and the Tonto National Forest Boundary, as established by Executive Order 869 dated July 1, 1908, as amended and the shown on the U.S. Forest Service 1969 Planimetric Maps;				
3. thence, westerly along the northern line of Township 1 North to pproximately the southwest corner of the southeast quarter of Section 35, Township 2 North, Range 7 East, said point being the boundary of the Tonto National Forest and Usery Mountain Semi-Regional Park;				
4. thence, northerly along the Tonto National Forest Boundary, which is generally the western line of the east half of Sections 26 and 35 of Township 2 North, Range 7 East, to a point which is where the quarter section line intersects with the northern line of Section 26, Township 2 North, Range 7 East, said point also being the northeast corner of the Usery Mountain Semi-Regional Park;				
5. thence, westerly along the Tonto National Forest Boundary, which is generally the south line of Sections 19, 20, 21 and 22 and the southern line of the west half of Section 23, Township 2 North, Range 7 East, to a point whcih is the southwest corner of Section 19, Township 2 North, Range 7 East;				
6. thence, northeasterly along the Tonto National Forest Boundary to a point where the Tonto National Forest Boundary intersects with the eastern boundary of the Salt River Indian Reservation, generally described as the center line of the Salt River Channel;				
7. thence, northeasterly and northerly along the common boundary of the Tonto National Forest and the Salt River Indian Reservation to a point which is the northeast corner of the Salt River Indian Reservation and the southeast corner of the Fort McDowell Indian Reservation, as shown on the plat dated July 22, 1902, and recorded with the U.S. Government on June 15, 1902;				
8. thence, northeasterly along the common boundary between the Tonto National Forest and the Fort McDowell Indian Reservation to a point which is the northeast corner of the Fort McDowell Indian Reservation;				
9. thence, southwesterly along the northern boundary of the Fort McDowell Indian Reservation, which line is a common boundary with the Tonto National Forest, to a point where the boundary intersects with the eastern line of Section 12, Township 4 North, Range 6 East;				

Arizona—Carbon Monoxide

Designated area	Designation		Classification	
	Date	Type	Date	Type
10. thence, northerly along the eastern line of Range 6 East to a point where the eastern line of Range 6 East intersects with the southern line of Township 5 North, said line is the boundary between the Tonto National Forest and the east boundary of McDowell Mountain Regional Park;				
11. thence, westerly along the southern line of Township 5 North to a point where the southern line intersects with the eastern line of Range 5 East which line is the boundary of Tonto National Forest and the north boundary of McDowell Mountain Regional Park;				
12. thence, northerly along the eastern line of Range 5 East to a point where the eastern line of Range 5 East intersects with the northern line of Township 5 North, which line is the boundary of the Tonto National Forest;				
13. thence, westerly along the northern line of Township 5 North to a point where the northern line of Township 5 North intersects with the easterly line of Range 4 East, said line is the boundary of Tonto National Forest;				
14. thence, northerly along the eastern line of Range 4 East to a point where the eastern line of Range 4 East intersects with the northern line of Township 6 North, which line is the boundary of the Tonto National Forest;				
15. thence, westerly along the northern line of Township 6 North to a point of intersection with the Maricopa-Yavapai County line, which is generally described in Arizona Revised Statutes Section 11–109 as the center line of the Aqua Fria River (Also the north end of Lake Pleasant);				
16. thence, southwesterly and southerly along the Maricopa-Yavapai County line to a point which is described by Arizona Revised Statutes Section 11–109 as being on the center line of the Aqua Fria River, two miles southerly and below the mouth of Humbug Creek;				
17. thence, southerly along the center line of Aqua Fria River to the intersection of the center line of the Aqua Fria River and the center line of Beardsley Canal, said point is generally in the northeast quarter of Section 17, Township 5 North, Range 1 East, as shown on the U.S. Geological Survey's Baldy Mountain, Arizona Quadrangle Map, 7.5 Minute series (Topographic), dated 1964;				
18. thence, southwesterly and southerly along the center line of Beardsley Canal to a point which is the center line of Beardsley Canal where it intersects with the center line of Indian School Road;				
19. thence, westerly along the center line of West Indian School Road to a point where the center line of West Indian School Road intersects with the center line of North Jackrabbit Trail;				

Arizona—Carbon Monoxide

Designated area	Designation		Classification	
	Date	Type	Date	Type
20. thence, southerly along the center line of Jackrabbit Trail approximately nine and three-quarter miles to a point where the center line of Jackrabbit Trail intersects with the Gila River, said point is generally on the north-south quarter section line of Section 8, Township 1 South, Range 2 West;				
21. thence, northeasterly and easterly up the Gila River to a point where the Gila River intersects with the northern extension of the western boundary of Estrella Mountain Regional Park, which point is generally the quarter corner of the northern line of Section 31, Township 1 North, Range 1 West;				
22. thence, southerly along the extension of the western boundary and along the western boundary of Estrella Mountain Regional Park to a point where the southern extension of the western boundary of Estrella Mountain Regional Park intersects with the southern line of Township 1 South;				
23. thence, easterly along the southern line of Township 1 South to a point where the south line of Township 1 South intersects with the western line of Range 1 East, which line is generally the southern boundary of Estrella Mountain Regional Park;				
24. thence, southerly along the western line of Range 1 East to the southwest corner of Section 18, Township 2 South, Range 1 East, said line is the western boundary of the Gila River Indian Reservation;				
25. thence, easterly along the southern boundary of the Gila River Indian Reservation which is the southern line of Sections 13, 14, 15, 16, 17, and 18, Township 2 South, Range 1 East, to the boundary between Maricopa and Pinal Counties as described in Arizona Revised Statutes Sections 11–109 and 11–113, which is the eastern line of Range 1 East;				
26. thence, northerly along the eastern boundary of Range 1 East, which is the common boundary between Maricopa and Pinal Counties, to a point where the eastern line of Range 1 East intersects the Gila River;				
27. thence, southerly up the Gila River to a point where the Gila River intersects with the southern line of Township 2 South; and				
28. thence, easterly along the southern line of Township 2 South to the point of beginning which is a point where the southern line of Township 2 South intersects with the easter line Range 7 East;				
29. except that portion of the area defined by paragraphs 1 through 28 above that lies within the Gila River Indian Reservation.				
Tucson Area:	7/10/00	Attainment		

Arizona—Carbon Monoxide

Designated area	Designation		Classification	
	Date	Type	Date	Type
Pima County (part) Township and Ranges as follows: T11–12S, R12–14E; T13–15S; R11–16E; and T16S, R12–16E Gila and Salt River Baseline and Meridian excluding portions of the Saguaro National Park and the Coronado National Forest..				
Rest of State	11/15/90	Nonclassifiable/ Attainment		
Apache County.				
Cochise County.				
Coconino County.				
Gila County.				
Graham County.				
Greenlee County.				
La Paz County.				
Maricopa County (part).				
Area outside Phoenix Area:				
Mohave County.				
Navajo County.				
Pima County (part).				
Area outside Tucson Area:				
Pinal County.				
Santa Cruz County.				
Yavapai County.				
Yuma County.				

[1] This date is November 15, 1990, unless otherwise noted.

Arizona—Ozone (1-Hour Standard)[2]

Designated area	Designation		Classification	
	Date [1]	Type	Date [1]	Type
Phoenix Area: Maricopa County (part)	6/14/05	Attainment		
Phoenix nonattainment Forest area boundary:				
1. Commencing at a point which is the intersection of the eastern line of Range 7 East, Gila and Salt River Baseline and Meridian, and the southern line of Township 2 South, said point is the southeastern corner of the Maricopa Association of Governments Urban Planning Area, which is the point of beginning;				
2. Thence, proceed northerly along the eastern line of Range 7 East which is the common boundary between Maricopa and Pinal Counties, as described in Arizona Revised Statutes Section 11–109, to a point where the eastern line of Range 7 East intersects the northern line of Township 1 North, said point is also the intersection of the Maricopa County Line and the Tonto National Forest Boundary, as established by Executive Order 869 dated July 1, 1908, as amended and shown on the U.S. Forest Service 1969 Planimetric Maps;				
3. Thence, westerly along the northern line of Township 1 North to approximately the southwest corner of the southeast quarter of Section 35, Township 2 North, Range 7 East, said point being the boundary of the Tonto National Forest and Usery Mountain Semi-Regional Park;				

Arizona—Ozone (1-Hour Standard)[2]

Designated area	Designation		Classification	
	Date [1]	Type	Date [1]	Type
4. Thence, northerly along the Tonto National Forest Boundary, which is generally the western line of the east half of Sections 26 and 35 of Township 2 North, Range 7 East, to a point which is where the quarter section line intersects with the northern line of Section 26, Township 2 North, Range 7 East, said point also being the northeast corner of the Usery Mountain Semi-Regional Park;				
5. Thence, westerly along the Tonto National Forest Boundary, which is generally the south line of Sections 19, 20, 21 and 22 and the southern line of the west half of Section 23, Township 2 North, Range 7 East, to a point which is the southwest corner of Section 19, Township 2 North, Range 7 East;				
6. Thence, northerly along the Tonto National Forest Boundary to a point where the Tonto National Forest Boundary intersects with the eastern boundary of the Salt River Indian Reservation, generally described as the center line of the Salt River Channel;				
7. Thence, northeasterly and northerly along the common boundary of the Tonto National Forest and the Salt River Indian Reservation to a point which is the northeast corner of the Salt River Indian Reservation and the southeast corner of the Fort McDowell Indian Reservation, as shown on the plat dated July 22, 1902, and recorded with the U.S. Government on June 15, 1902;				
8. Thence, northeasterly along the common boundary between the Tonto National Forest and the Fort McDowell Indian Reservation to a point which is the northeast corner of the Fort McDowell Indian Reservation;				
9. Thence, southwesterly along the northern boundary of the Fort McDowell Indian Reservation, which line is a common boundary with the Tonto National Forest, to a point where the boundary intersects with the eastern line of Section 12, Township 4 North, Range 6 East;				
10. Thence, northerly along the eastern line of Range 6 East to a point where the eastern line of Range 6 East intersects with the southern line of Township 5 North, said line is the boundary between the Tonto National Forest and the east boundary of McDowell Mountain Regional Park;				
11. Thence, westerly along the southern line of Township 5 North to a point where the southern line intersects with the eastern line of Range 5 East which line is the boundary of Tonto National Forest and the north boundary of McDowell Mountain Regional Park;				
12. Thence, northerly along the eastern line of Range 5 East to a point where the eastern line of Range 5 East intersects with the northern line of Township 5 North, which line is the boundary of the Tonto National Forest;				

Arizona—Ozone (1-Hour Standard)[2]

Designated area	Designation		Classification	
	Date [1]	Type	Date [1]	Type
13. Thence, westerly along the northern line of Township 5 North to a point where the northern line of Township 5 North intersects with the easterly line of Range 4 East, said line is the boundary of Tonto National Forest;				
14. Thence, northerly along the eastern line of Range 4 East to a point where the eastern line of Range 4 East intersects with the northern line of Township 6 North, which line is the boundary of the Tonto National Forest;				
15. Thence, westerly along the northern line of Township 6 North to a point of intersection with the Maricopa-Yavapai County line, which is generally described in Arizona Revised Statutes Section 11–109 as the center line of the Aqua Fria River (Also the north end of Lake Pleasant);				
16. Thence, southwesterly and southerly along the Maricopa-Yavapai County line to a point which is described by Arizona Revised Statutes Section 11–109 as being on the center line of the Aqua Fria River, two miles southerly and below the mouth of Humbug Creek;				
17. Thence, southerly along the center line of Aqua Fria River to the intersection of the center line of the Aqua Fria River and the center line of Beardsley Canal, said point is generally in the northeast quarter of Section 17, Township 5 North, Range 1 East, as shown on the U.S. Geological Survey's Baldy Mountain, Arizona Quadrangle Map, 7.5 Minute series (Topographic), dated 1964;				
18. Thence, southwesterly and southerly along the center line of Beardsley Canal to a point which is the center line of Beardsley Canal where it intersects with the center line of Indian School Road;				
19. Thence, westerly along the center line of West Indian School Road to a point where the center line of West Indian School Road intersects with the center line of North Jackrabbit Trail;				
20. Thence, southerly along the center line of Jackrabbit Trail approximately nine and three-quarter miles to a point where the center line of Jackrabbit Trail intersects with the Gila River, said point is generally on the north-south quarter section line of Section 8, Township 1 South, Range 2 West;				
21. Thence, northeasterly and easterly up the Gila River to a point where the Gila River intersects with the northern extension of the western boundary of Estrella Mountain Regional Park, which point is generally the quarter corner of the northern line of Section 31, Township 1 North, Range 1 West;				

Arizona—Ozone (1-Hour Standard)[2]

Designated area	Designation		Classification	
	Date [1]	Type	Date [1]	Type
22. Thence, southerly along the extension of the western boundary and along the western boundary of Estrella Mountain Regional Park to a point where the southern extension of the western boundary of Estrella Mountain Regional Park intersects with the southern line of Township 1 South;				
23. Thence, easterly along the southern line of Township 1 South to a point where the south line of Township 1 South intersects with the western line of Range 1 East, which line is generally the southern boundary of Estrella Mountain Regional Park;				
24. Thence, southerly along the western line of Range 1 East to the southwest corner of Section 18, Township 2 South, Range 1 East, said line is the western boundary of the Gila River Indian Reservation;				
25. Thence, easterly along the southern boundary of the Gila River Indian Reservation which is the southern line of Sections 13, 14, 15, 16, 17, and 18, Township 2 South, Range 1 East, to the boundary between Maricopa and Pinal Counties as described in Arizona Revised Statutes Sections 11–109 and 11–113, which is the eastern line of Range 1 East;				
26. Thence, northerly along the eastern boundary of Range 1 East, which is the common boundary between Maricopa and Pinal Counties, to a point where the eastern line of Range 1 East intersects the Gila River;				
27. Thence, southerly up the Gila River to a point where the Gila River intersects with the southern line of Township 2 South;				
28. Thence, easterly along the southern line of Township 2 South to the point of beginning which is a point where the southern line of Township 2 South intersects with the eastern line Range 7 East;				
29. Except that portion of the area defined by paragraphs 1 through 28 above that lies within the Gila River Indian Reservation.				
Tucson Area:				
Pima County (part)				
Tuscon area	.....	Unclassifiable/Attainment		
Rest of State	.....	Unclassifiable/Attainment		
Apache County				
Cochise County				
Coconino County				
Gila County				
Graham County				
Greenlee County				
La Paz County				
Maricopa County (part) area outside of Phoenix				
Mohave County				
Navajo County				
Pima County (part) Remainder of county				
Pinal County				
Santa Cruz County				
Yavapai County				

Arizona—Ozone (1-Hour Standard)[2]

Designated area	Designation		Classification	
	Date [1]	Type	Date [1]	Type
Yuma County				

[1] This date is October 18, 2000, unless otherwise noted.
[2] The 1-hour ozone standard is revoked effective June 15, 2005 for all areas in Arizona.

Arizona—PM–10

Designated Area	Designation		Classification	
	Date	Type	Date	Type
Cochise County:				
Paul Spur/Douglas planning area ..... Township 23 South, Range 25 East (T23S, R25E): T23S,R26E T23S, R27E T23S, R28E T24S, R25E T24S, R26E T24S, R27E T24S, R28E	11/15/90	Nonattainment	11/15/90	Moderate.
Santa Cruz County:				
Nogales planning area ..... The portions of the following Townships which are within the State of Arizona and lie east of 111 degrees longitude: T23S, R13E, T23S, R14E, T24S, R13E, T24S, R14E	11/15/90	Nonattainment	11/15/90	Moderate.
Pima County:				
Rillito planning area ..... Townships: T11S, R9E, T11S, R10E, T11S, R11E, T11S, R12E, T12S, R8E, T12S, R9E, T12S, R10E, T12S, R11E, T12S, R12E	11/15/90	Nonattainment	11/15/90	Moderate.
Ajo planning area ..... Township T12S, R6W, and the following sections of Township T12S, R5W:. a. Sections 6–8 b. Sections 17–20, and c. Sections 29–32	11/15/90	Nonattainment	11/15/90	Moderate.
Maricopa County:				
Phoenix planning area ..... T6N, R1–3W, R1–7E; T5N, R1–3W, R1–7E; T4N, R1–3W, R1–7E; T3N, R1–3W, R1–7E; T2N, R1–3W, R1–7E; T1N, R1–3W, R1–7E; T1S, R1–3W, R1–7E; T2S, R1–3W, R1–7E.	11/15/90	Nonattainment	6/10/96	Serious.
Pinal County:				
Phoenix planning area. T1N, R8E	11/15/90	Nonattainment	6/10/96	Serious.
Yuma County:				
Yuma planning area ..... Townships: T7S-R21W, R22W; T8S-R21W, R22W, R23W, R24W T9S-R21W, R22W, R23W, R24W, R25W; T10S-R21W, R22W, R23W, R24W, R25W	11/15/90	Nonattainment	11/15/90	Moderate.
Pinal and Gila Counties:				
Hayden planning area ..... T1S, R13E (sections 7–36); T1S, R14E (sections 25–36);T2S, R13E; T2S, R14E; T2S, R15E; T3S, R13E; T3S, R14E; T3S, R15E; T3S, R16E (except that portion in the San Carlos Apache Indian Reservation); T4S, R13E; T4S, R14E; T4S, R15E; T4S, R16E; T5S, R13E; T5S, R14E; T5S, R15E; T5S, R16E; T6S, R13E; T6S, R14E; T6S, R15E; and T6S, R16E.	11/15/90	Nonattainment	11/15/90	Moderate.

Arizona—PM–10

Designated Area	Designation		Classification	
	Date	Type	Date	Type
Miami planning area T1N, R13E; T1N, R14E; T1N, R15E; T1S, R13E (sections 1–6); T1S, R14E (sections 124); T1S, R14½E; and T1S, R15E.	11/15/90	Nonattainment	11/15/90	Moderate.
Gila County (part):				
Payson: T10N, sections 1–3, 10–15, 22–27, and 34–36 of R9E; T11N, sections 1–3, 10–15, 22–27, and 34–36 of R9E; T10–11N, R10E; T10N, sections 4–9, 16–21, and 28–33 of R11E; T11N, sections 4–9, 16–21, and 28–33 of R11E.	08/26/02	Attainment		
Mohave County (part):				
Bullhead City: T21N, R21W, excluding Lake Mead National Recreation Area: T20N, R21–22W; T19N, R22W excluding Fort Mohave Indian Reservation.	August 26, 2002	Attainment		
Rest of State	11/15/90	Unclassifiable		

Arizona—NO_2 (1971 Annual Standard)

Designated area	Does not meet primary standards	Cannot be classified or better than national standards
Whole State		X

Arizona—NO_2 (2010 1-Hour Standard)

Designated area	Designation [a]	
	Date [1]	Type
Apache County		Unclassifiable/Attainment.
Cochise County		Unclassifiable/Attainment.
Coconino County		Unclassifiable/Attainment.
Gila County		Unclassifiable/Attainment.
Graham County		Unclassifiable/Attainment.
Greenlee County		Unclassifiable/Attainment.
La Paz County		Unclassifiable/Attainment.
Maricopa County		Unclassifiable/Attainment.
Mohave County		Unclassifiable/Attainment.
Navajo County		Unclassifiable/Attainment.
Pima County		Unclassifiable/Attainment.
Pinal County		Unclassifiable/Attainment.
Santa Cruz County		Unclassifiable/Attainment.
Yavapai County		Unclassifiable/Attainment.
Yuma County		Unclassifiable/Attainment.

[a] Includes Indian Country located in each county or area, except as otherwise specified.
[1] This date is 90 days after October 31, 2011, unless otherwise noted.

Arizona—Ozone (8-Hour Standard)

Designated area	Designation [a]		Category/classification	
	Date [1]	Type	Date [1]	Type
Phoenix-Mesa, AZ:				
Maricopa County (part)		Nonattainment	6/13/12	Subpart 2/Marginal.

Arizona—Ozone (8-Hour Standard)

Designated area	Designation [a]		Category/classification	
	Date [1]	Type	Date [1]	Type
T1N, R1E (except that portion in Indian Country); T1N, R2E; T1N, R3E; T1N, R4E; T1N, R5E; T1N, R6E; T1N, R7E; T1N, R1W; T1N, R2W; T1N, R3W; T1N, R4W; T1N, R5W; T1N, R6W; T2N, R1E; T2N, R2E; T2N, R3E; T2N, R4E; T2N, R5E, T2N, R6E; T2N, R7E; T2N, R8E; T2N, R9E; T2N, R10E; T2N, R11E; T2N, R12E (except that portion in Gila County); T2N, R13E (except that portion in Gila County); T2N, R1W; T2N, R2W; T2N, R3W; T2N, R4W; T2N, R5W; T2N, R6W; T2N, R7W; T3N, R1E; T3N, R2E; T3N, R3E; T3N, R4E; T3N, R5E; T3N, R6E; T3N, R7E; T3N, R8E; T3N, R9E; T3N, R10E (except that portion in Gila County); T3N, R11E (except that portion in Gila County); T3N, R12E (except that portion in Gila County); T3N, R1W; T3N, R2W; T3N, R3W; T3N, R4W; T3N, R5W; T3N, R6W; T4N, R1E; T4N, R2E; T4N, R3E; T4N, R4E; T4N, R5E; T4N, R6E; T4N, R7E; T4N, R8E; T4N, R9E; T4N, R10E (except that portion in Gila County); T4N, R11E (except that portion in Gila County); T4N, R12E (except that portion in Gila County); T4N, R1W; T4N, R2W; T4N, R3W; T4N, R4W; T4N, R5W; T4N, R6W; T5N, R1E; T5N, R2E; T5N, R3E; T5N, R4E; T5N, R5E; T5N, R6E; T5N, R7E; T5N, R8E; T5N, R9E (except that portion in Gila County); T5N, R10E (except that portion in Gila County); T5N, R1W; T5N, R2W; T5N, R3W; T5N, R4W; T5N, R5W; T6N, R1E (except that portion in Yavapai County); T6N, R2E; T6N, R3E; T6N, R4E; T6N, R5E; T6N, R6E; T6N, R7E; T6N, R8E; T6N, R9E (except that portion in Gila County); T6N, R10E (except that portion in Gila County); T6N, R1W (except that portion in Yavapai County); T6N, R2W; T6N, R3W; T6N, R4W T6N, R5W T7N, R1E (except that portion in Yavapai County); T7N, R2E; (except that portion in Yavapai County); T7N, R3E; T7N, R4E; T7N, R5E; T7N, R6E; T7N, R7E; T7N, R8E; T7N, R9E (except that portion in Gila County); T7N, R1W (except that portion in Yavapai County); T7N, R2W (except that portion in Yavapai County); T8N, R2E (except that portion in Yavapai County); T8N, R3E (except that portion in Yavapai County); T8N, R4E (except that portion in Yavapai County); T8N, R5E (except that portion in Yavapai County); T8N, R6E (except that portion in Yavapai County); T8N, R7E (except that portion in Yavapai County); T8N, R8E (except that portion in Yavapai and Gila Counties); T8N, R9E (except that portion in Yavapai and Gila Counties); T1S, R1E (except that portion in Indian Country); T1S, R2E (except that portion in Pinal County and in Indian Country); T1S, R3E; T1S, R4E; T1S, R5E; T1S, R6E; T1S, R7E; T1S, R1W; T1S, R2W; T1S, R3W; T1S, R4W; T1S, R5W; T1S, R6W; T2S, R1E (except that portion in Indian Country); T2S, R5E; T2S, R6E; T2S, R7E; T2S, R1W; T2S, R2W; T2S, R3W; T2S, R4W; T2S, R5W; T3S, R1E; T3S, R1W; T3S, R2W; T3S, R3W; T3S, R4W; T3S, R5W; T4S, 1E; T4S, R1W; T4S, R2W; T4S, R3W; T4S, R4W; T4S, R5W.				

Arizona—Ozone (8-Hour Standard)

Designated area	Designation [a]		Category/classification	
	Date [1]	Type	Date [1]	Type
Pinal County (part)		Nonattainment	6/13/12	Subpart 2/Marginal.
Apache Junction: T1N, R8E; T1S, R8E (Sections 1 through 12)				
Apache Junction: T1N, R8E; T1S, R8E (Sections 1 through 12)				
Rest of State		Unclassifiable/Attainment		
Apache County				
Cochise County				
Coconino County				
Gila County				
Graham County				
Greenlee County				
La Paz County				
Maricopa County (part) remainder				
Mohave County				
Navajo County				
Pima County				
Pinal County (part) remainder				
Santa Cruz County				
Yavapai County				
Yuma County				

[a] Includes Indian Country located in each county or area, except as otherwise specified.
[1] This date is June 15, 2004, unless otherwise noted.

Arizona—$PM_{2.5}$ (Annual NAAQS)

Designated area	Designation [a]	
	Date [1]	Type
Statewide:		
Apache County		Unclassifiable/Attainment.
Cochise County		Unclassifiable/Attainment.
Coconino County		Unclassifiable/Attainment.
Gila County		Unclassifiable/Attainment.
Graham County		Unclassifiable/Attainment.
Greenlee County		Unclassifiable/Attainment.
La Paz County		Unclassifiable/Attainment.
Maricopa County		Unclassifiable/Attainment.
Mohave County		Unclassifiable/Attainment.
Navajo County		Unclassifiable/Attainment.
Pima County		Unclassifiable/Attainment.
Pinal County		Unclassifiable/Attainment.
Santa Cruz County		Unclassifiable/Attainment.
Yavapai County		Unclassifiable/Attainment.
Yuma County		Unclassifiable/Attainment.

[a] Includes Indian Country located in each county or area, except as otherwise specified.
[1] This date is 90 days after January 5, 2005, unless otherwise noted.

Arizona—$PM_{2.5}$ [24-hour NAAQS]

Designated area	Designation for the 1997 NAAQS [a]		Designation for the 2006 NAAQS [a]	
	Date [1]	Type	Date [2]	Type
Nogales:				
Santa Cruz County (part)		Unclassifiable/Attainment.		Nonattainment.
Nogales planning area bounded as follows: The portions of the following Townships which are within the State of Arizona and lie east of 111 longitude: T23S, R13E; T23S, R14E; T24S, R13E; T24S, R14E.				
Rest of State:				
Apache County		Unclassifiable/Attainment.		Unclassifiable/Attainment.

Arizona—$PM_{2.5}$ [24-hour NAAQS]

Designated area	Designation for the 1997 NAAQS [a]		Designation for the 2006 NAAQS [a]	
	Date [1]	Type	Date [2]	Type
Cochise County		Unclassifiable/Attainment.	3/7/11	Unclassifiable/Attainment.
Coconino County		Unclassifiable/Attainment.		Unclassifiable/Attainment.
Gila County		Unclassifiable/Attainment.	3/7/11	Unclassifiable/Attainment.
Graham County		Unclassifiable/Attainment.	3/7/11	Unclassifiable/Attainment.
Greenlee County		Unclassifiable/Attainment.		Unclassifiable/Attainment.
La Paz County		Unclassifiable/Attainment.	3/7/11	Unclassifiable/Attainment.
Maricopa County		Unclassifiable/Attainment.	3/7/11	Unclassifiable/Attainment.
Mohave County		Unclassifiable/Attainment.		Unclassifiable/Attainment.
Navajo County		Unclassifiable/Attainment.		Unclassifiable/Attainment.
Pima County		Unclassifiable/Attainment.	3/7/11	Unclassifiable/Attainment.
Pinal County (remainder, excluding lands of the Gila River Indian Community and Ak-Chin Indian Community.		Unclassifiable/Attainment.	3/7/11	Unclassifiable/Attainment.
Santa Cruz County (remainder)		Unclassifiable/Attainment.		Unclassifiable/Attainment.
West Central Pinal:				
Pinal County (part)		Unclassifiable/Attainment.	3/7/11	Nonattainment.
1. Commencing at a point which is the intersection of the eastern line of Range 1 East, Gila and Salt River Baseline and Meridian, and the northern line of Township 4 South, which is the point of beginning:				
2. Thence, proceed easterly along the northern line of Township 4 South to a point where the northern line of Township 4 South intersects the eastern line of Range 4 East;				
3. Thence, southerly along the eastern line of Range 4 East to a point where the eastern line of Range 4 East intersects the northern line of Township 6 South;				
4. Thence, easterly along the northern line of Township 6 South to a point where the northern line of Township 6 South intersects the eastern line of Range 4 East;				
5. Thence, southerly along the eastern line of Range 4 East to a point where the eastern line of Range 4 East intersects the southern line of Township 7 South;				

Arizona—$PM_{2.5}$ [24-hour NAAQS]

Designated area	Designation for the 1997 NAAQS [a]		Designation for the 2006 NAAQS [a]	
	Date [1]	Type	Date [2]	Type
6. Thence, westerly along the southern line of Township 7 South to a point where the southern line of Township 7 South intersects the quarter section line common to the southwestern southwest quarter section and the southeastern southwest quarter section of section 34, Range 3 East and Township 7 South;				
7. Thence, northerly along the quarter section line common to the southwestern southwest quarter section and the southeastern southwest quarter section of sections 34, 27, 22, and 15, Range 3 East and Township 7 South, to a point where the quarter section line common to the southwestern southwest quarter section and the southeastern southwest quarter section of sections 34, 27, 22, and 15, Range 3 East and Township 7 South, intersects the northern line of section 15, Range 3 East and Township 7 South;				
8. Thence, westerly along the northern line of sections 15, 16, 17, and 18, Range 3 East and Township 7 South, and the northern line of sections 13, 14, 15, 16, 17, and 18, Range 2 East and Township 7 South, to a point where the northern line of sections 15, 16, 17, and 18, Range 3 East and Township 7 South, and the northern line of sections 13, 14, 15, 16, 17, and 18, Range 2 East and Township 7 South, intersect the eastern line of Range 1 East, which is the common boundary between Maricopa and Pinal Counties, as described in Arizona Revised Statutes sections 11–109 and 11–113;				
9. Thence, northerly along the eastern line of Range 1 East to the point of beginning which is the point where the eastern line of Range 1 East intersects the northern line of Township 4 South;				

Arizona—$PM_{2.5}$ [24-hour NAAQS]

Designated area	Designation for the 1997 NAAQS [a]		Designation for the 2006 NAAQS [a]	
	Date [1]	Type	Date [2]	Type
10. Except that portion of the area defined by paragraphs 1 through 9 above that lies in Indian country.				
Yavapai County		Unclassifiable/Attainment.	3/7/11	Unclassifiable/Attainment.
Yuma County		Unclassifiable/Attainment.	3/7/11	Unclassifiable/Attainment.
Lands of the Gila River Indian Community in Pinal County.				
Lands of the Ak-Chin Indian Community in Pinal County.				

[a] Includes Indian Country located in each county or area, except as otherwise specified.
[1] This date is 90 days after January 5, 2005, unless otherwise noted.
[2] This date is 30 days after November 13, 2009, unless otherwise noted.

Arizona—2008 Lead NAAQS

Designated area	Designation for the 2008 NAAQS [a]	
	Date [1]	Type
Hayden, AZ:		
Gila County (part)		Unclassifiable.
The portions of Gila County that are bounded by: T4S,R15E; T4S,R16E (except those portions in the San Carlos Indian Reservation); T5S,R15E; T5S,R16E (except those portions in the San Carlos Indian Reservation).		
Pinal County (part)		Unclassifiable.
The portions of Pinal County that are bounded by: T4S,R14E; T4S, R15E; T4S,R16E (except those portions in the San Carlos Indian Reservation); T5S,R14E; T5S,R15E; T5S,R16E (except those portions in the San Carlos Indian Reservation); T6S,R14E; T6S,R15E; T6S,R16E (except those portions in the San Carlos Indian Reservation).		
Rest of State		Unclassifiable/Attainment.

[a] Includes Indian Country located in each county or area, except as otherwise specified.
[1] December 31, 2011 unless otherwise noted.

[43 FR 8964, Mar. 3, 1978]

EDITORIAL NOTE: For FEDERAL REGISTER citations affecting §81.303 see the List of CFR Sections Affected, which appears in the Finding Aids section of the printed volume and at *www.fdsys.gov*.

EFFECTIVE DATE NOTES: 1. At 77 FR 30096, May 21, 2012, §81.303 was amended by revising the table heading for ''Arizona—Ozone (8-Hour Standard)'' to read ''Arizona—1997 8-Hour Ozone NAAQS (Primary and Secondary)''; revising the table heading for ''Arizona—Ozone (8-Hour Standard)'' to read ''Arizona—1997 8-Hour Ozone NAAQS (Primary and Secondary)'' by adding a new table entitled ''Arizona—2008 8-Hour Ozone NAAQS (Primary and Secondary)'' following the newly designated table ''Arizona—1997 8-Hour Ozone NAAQS (Primary and Secondary)''; adding a new table entitled ''Arizona—2008 8-Hour Ozone NAAQS (Primary and Secondary)'' following the newly designated table ''Arizona—1997 8-Hour Ozone NAAQS (Primary and Secondary)'', effective July 20, 2012. For the convenience of the user, the added text is set forth as follows:

§81.303 Arizona.

* * * * *

ARIZONA—2008 8-HOUR OZONE NAAQS [PRIMARY AND SECONDARY]

Designated area	Designation		Classification	
	Date [1]	Type	Date [1]	Type
Phoenix-Mesa, AZ: [2] Maricopa County (part).		Nonattainment		Marginal.

ARIZONA—2008 8-HOUR OZONE NAAQS [PRIMARY AND SECONDARY]—Continued

Designated area	Designation		Classification	
	Date [1]	Type	Date [1]	Type
T1N, R1E (except that portion in Indian Country); T1N, R2E; T1N, R3E; T1N, R4E; T1N, R5E; T1N, R6E; T1N, R7E; T1N, R1W; T1N, R2W; T1N, R3W; T1N, R4W; T1N, R5W; T1N, R6W; T1N, R7W; T1N, R8W; T2N, R1E; T2N, R2E; T2N, R3E; T2N, R4E; T2N, R5E; T2N, R6E; T2N, R7E; T2N, R8E; T2N, R9E; T2N, R10E; T2N, R11E; T2N, R12E (except that portion in Gila County); T2N, R13E (except that portion in Gila County); T2N, R1W; T2N, R2W; T2N, R3W; T2N, R4W; T2N, R5W; T2N, R6W; T2N, R7W; T2N, R8W; T3N, R1E; T3N, R2E; T3N, R3E; T3N, R4E; T3N, R5E; T3N, R6E; T3N, R7E; T3N, R8E; T3N, R9E; T3N, R10E (except that portion in Gila County); T3N, R11E (except that portion in Gila County); T3N, R12E (except that portion in Gila County); T3N, R1W; T3N, R2W; T3N, R3W; T3N, R4W; T3N, R5W; T3N, R6W; T4N, R1E; T4N, R2E; T4N, R3E; T4N, R4E; T4N, R5E; T4N, R6E; T4N, R7E; T4N, R8E; T4N, R9E; T4N, R10E (except that portion in Gila County); T4N, R11E (except that portion in Gila County); T4N, R12E (except that portion in Gila County); T4N, R1W; T4N, R2W; T4N, R3W; T4N, R4W; T4N, R5W; T4N, R6W; T5N, R1E; T5N, R2E; T5N, R3E; T5N, R4E; T5N, R5E; T5N, R6E; N, R8E; T5N, R9E (except that portion in Gila County); T5N, R10E (except that portion in Gila County); T5N, R1W; T5N, R2W; T5N, R3W; T5N, R4W; T5N, R5W; T6N, R1E (except that portion in Yavapai County); T6N, R2E; T6N, R3E; T6N, R4E; T6N, R5E; T6N, R6E; T6N, R7E; T6N, R8E; T6N, R9E (except that portion in Gila County); T6N, R10E (except that portion in Gila County); T6N, R1W (except that portion in Yavapai County); T6N, R2W; T6N, R3W; T6N, R4W; T6N, R5W; T7N, R1E; (except that portion in Yavapai County); T7N, R2E (except that portion in Yavapai County); T7N, R3E; T7N, R4E; T7N, R5E; T7N, R6E; T7N, R7E; T7N, R8E; T7N, R9E (except that portion in Gila County); T7N, R1W (except that portion in Yavapai County); T7N, R2W (except that portion in Yavapai County); T8N, R2E (except that portion in Yavapai County); T8N, R3E (except that portion in Yavapai County); T8N, R4E (except that portion in Yavapai County); T8N, R5E (except that portion in Yavapai County); T8N, R6E (except that portion in Yavapai County); T8N, R7E (except that portion in Yavapai County); T8N, R8E (except that portion in Yavapai and Gila Counties); T8N, R9E (except that portion in Yavapai and Gila Counties); T1S, R1E (except that portion in Indian Country); T1S, R2E (except that portion in Pinal County and in Indian Country); T1S, R3E; T1S, R4E; T1S, R5E; T1S, R6E; T1S, R7E; T1S, R1W; T1S, R2W; T1S, R3W; T1S, R4W; T1S, R5W; T1S, R6W; T2S, R1E (except that portion in Indian Country); T2S, R5E; T2S, R6E; T2S, R7E; T2S, R1W; T2S, R2W; T2S, R3W; T2S, R4W; T2S, R5W; T3S, R1E; T3S, R1W; T3S, R2W; T3S, R3W; T3S, R4W; T3S, R5W; T4S, R1E; T4S, R1W; T4S, R2W; T4S, R3W; T4S, R4W; T4S, R5W; T5S, R4W (Sections 1 through 22 and 27 through 34).				
Pinal County (part) Apache Junction:				
T1N, R8E; T1S, R8E (Sections 1 through 12).				
Fort McDowell Yavapai Nation [3].				
Salt River Pima-Maricopa Indian Community of the Salt River Reservation [3].				

ARIZONA—2008 8-HOUR OZONE NAAQS [PRIMARY AND SECONDARY]—Continued

Designated area	Designation		Classification	
	Date [1]	Type	Date [1]	Type
Tohono O'odham Nation of Arizona [3].				
Rest of State: [4]	.....	Unclassifiable/Attainment.		
Apache County				
Cochise County				
Coconino County				
Gila County				
Graham County				
Greenlee County				
La Paz County				
Maricopa County (part) remainder				
Mohave County				
Navajo County				
Pima County				
Pinal County (part) remainder				
Santa Cruz County				
Yavapai County				
Yuma County				

[1] This date is July 20, 2012, unless otherwise noted.
[2] Excludes Indian country located in each area, unless otherwise noted.
[3] Includes Indian country of the tribe listed in this table located in the identified area. Information pertaining to areas of Indian country in this table is intended for CAA planning purposes only and is not an EPA determination of Indian country status or any Indian country boundary. EPA lacks the authority to establish Indian country land status, and is making no determination of Indian country boundaries, in this table.
[4] Includes any Indian country in each county or area, unless otherwise specified.

* * * * *

EFFECTIVE DATE NOTES: 2. At 77 FR 32032, May 31, 2012, §81.303, the ''Arizona–PM–10'' table is amended by adding a new entry for ''Pinal County'' after the entry for ''Mohave County (part)'' and before the entry for ''Rest of State'', effective July 2, 2012. For the convenience of the user, the added text is set forth as follows:

§81.303 Arizona.

* * * * *

ARIZONA–PM–10

Designated Area	Designation		Classification	
	Date	Type	Date	Type
* * *	*	*	*	*
Pinal County (part)				
West Pinal	7/2/12	Nonattainment	7/2/12	Moderate.
1. Commencing at a point which is the intersection of the western line of Range 2 East, Gila and Salt River Baseline and Meridian, and the northern line of Township 4 South, which is the point of beginning:				
2. Thence, proceed easterly along the northern line of Township 4 South to a point where the northern line of Township 4 South intersects the western line of Range 7 East;				

ARIZONA–PM–10—Continued

Designated Area	Designation		Classification	
	Date	Type	Date	Type
3. Thence, northerly along the western line of Range 7 East to a point where the western line of Range 7 East intersects the northern line of Township 3 South;				
4. Thence, easterly along the northern line of Township 3 South to a point where the northern line of Township 3 South intersects the western line of Range 8 East;				
5. Thence, northerly along the western line of Range 8 East to a point where the western line of Range 8 East intersects the northern line of Township 1 South;				
6. Thence, easterly along the northern line of Township 1 South to a point where the northern line of Township 1 South intersects the eastern line of Range 8 East;				
7. Thence southerly along the eastern line of Range 8 East to a point where the eastern line of Range 8 East intersects the Northern line of Township 3 South;				
8. Thence easterly along the northern line of Township 3 South to a point where the northern line of Township 3 South intersects the eastern line of Range 9 East;				
9. Thence southerly along the eastern line of Range 9 east to a point where the eastern line of Range 9 East intersects the northern line of Township 4 South;				
10. Thence easterly along the northern line of Township 4 South to a point where the northern line of Township 4 South intersects the eastern line of Range 10 East;				

ARIZONA–PM–10—Continued

Designated Area	Designation		Classification	
	Date	Type	Date	Type
11. Thence southerly along the eastern line of Range 10 East to a point where the eastern line of Range 10 East intersects the southern line of Township 5 South;			
12. Thence westerly along the southern line of Township 5 South to a point where the southern line of Township 5 South intersects the eastern line of Range 8 East;				
13. Thence southerly along the eastern line of Range 8 East to a point where the eastern line of Range 8 East intersects the northern line of Township 8 South;				
14. Thence easterly along the northern line of Township 8 South to a point where the northern line of Township 8 South intersects the eastern line of Range 9 East;				
15. Thence southerly along the eastern line of Range 9 east to a point where the eastern line of Range 9 East intersects the northern line of Township 9 South;				
16. Thence easterly along the northern line of Township 9 South to a point where the northern line of Township 9 South intersects the eastern line of Range 10 East;				
17. Thence southerly along the eastern line of Range 10 East to a point where the eastern line of Range 10 East intersects the southern line of Township 9 South;				
18. Thence westerly along the southern line of Township 9 South to a point where the southern line of Township 9 South intersects the western line of Range 7 East;				

ARIZONA–PM–10—Continued

Designated Area	Designation		Classification	
	Date	Type	Date	Type
19. Thence northerly along the western line of Range 7 East to a point where the western line of Range 7 East intersects the southern line of Township 8 South;			
20. Thence westerly along the southern line of Township 8 South to a point where the southern line of Township 8 South intersects the western line of Range 6 East;				
21. Thence northerly along the western line of Range 6 East to a point where the western line of Range 6 East intersects the southern line of Township 7 South;				
22. Thence, westerly along the southern line of Township 7 South to a point where the southern line of Township 7 South intersects the quarter section line common to the southwestern southwest quarter section and the southeastern southwest quarter section of section 34, Range 3 East and Township 7 South;				
23. Thence, northerly along the along the quarter section line common to the southwestern southwest quarter section and the southeastern southwest quarter section of sections 34, 27, 22, and 15, Range 3 East and Township 7 South, to a point where the quarter section line common to the southwestern southwest quarter section and the southeastern southwest quarter section of sections 34, 27, 22, and 15, Range 3 East and Township 7 South, intersects the northern line of section 15, Range 3 East and Township 7 South;				

ARIZONA–PM–10—Continued

Designated Area	Designation		Classification	
	Date	Type	Date	Type
24. Thence, westerly along the northern line of sections 15, 16, 17, and 18, Range 3 East and Township 7 South, and the northern line of sections 13, 14, 15, 16, 17, and 18, Range 2 East and Township 7 South, to a point where the northern line of sections 15, 16, 17, and 18, Range 3 East and Township 7 South, and the northern line of sections 13, 14, 15, 16, 17, and 18, Range 2 East and Township 7 South, intersect the western line of Range 2 East, which is the common boundary between Maricopa and Pinal Counties, as described in Arizona Revised Statutes sections 11–109 and 11–113;				
25. Thence, northerly along the western line of Range 2 East to the point of beginning which is the point where the western line of Range 2 East intersects the northern line of Township 4 South;				
26. Except that portion of the area defined by paragraphs 1 through 25 above that lies within the Ak-Chin Indian Reservation, Gila River Indian Reservation, and the Tohono O'odham Nation's Florence Village and San Lucy Farms.				
* * * * * * *				

* * * * *

§ 81.304 Arkansas.

Arkansas—SO_2

Designated area	Does not meet primary standards	Does not meet secondary standards	Cannot be classified	Better than national standards
AQCR 016				X
AQCR 017				X
AQCR 018				X

Arkansas—SO_2

Designated area	Does not meet primary standards	Does not meet secondary standards	Cannot be classified	Better than national standards
AQCR 019				X
AQCR 020				X
AQCR 021				X
AQCR 022				X

Arkansas—Carbon Monoxide

Designated Area	Designation		Classification	
	Date [1]	Type	Date [1]	Type
AQCR 016 Central Arkansas Intrastate		Unclassifiable/Attainment		
Chicot County				
Clark County				
Cleveland County				
Conway County				
Dallas County				
Desha County				
Drew County				
Faulkner County				
Garland County				
Grant County				
Hot Spring County				
Jefferson County				
Lincoln County				
Lonoke County				
Perry County				
Pope County				
Pulaski County				
Saline County				
Yell County				
AQCR 017 Metropolitan Fort Smith Interstate		Unclassifiable/Attainment		
Benton County				
Crawford County				
Sebastian County				
Washington County				
AQCR 018 Metropolitan Memphis Interstate		Unclassifiable/Attainment		
Crittenden County				
AQCR 019 Monroe (Louisiana)-El Dorado Interstate		Unclassifiable/Attainment		
Ashley County				
Bradley County				
Calhoun County				
Nevada County				
Ouachita County				
Union County				
AQCR 020 Northeast Arkansas Intrastate		Unclassifiable/Attainment		
Arkansas County				
Clay County				
Craighead County				
Cross County				
Greene County				
Independence County				
Jackson County				
Lawrence County				
Lee County				
Mississippi County				
Monroe County				
Phillips County				
Poinsett County				
Prairie County				
Randolph County				
Sharp County				
St. Francis County				
White County				
Woodruff County				
AQCR 021 Northwest Arkansas Intrastate		Unclassifiable/Attainment		
Baxter County				
Boone County				
Carroll County				
Cleburne County				

Arkansas—Carbon Monoxide

Designated Area	Designation		Classification	
	Date [1]	Type	Date [1]	Type
Franklin County				
Fulton County				
Izard County				
Johnson County				
Logan County				
Madison County				
Marion County				
Montgomery County				
Newton County				
Pike County				
Polk County				
Scott County				
Searcy County				
Stone County				
Van Buren County				
AQCR 022 Shreveport-Texarkana-Tyler Interstate ...	.....	Unclassifiable/Attainment		
Columbia County				
Hempstead County				
Howard County				
Lafayette County				
Little River County				
Miller County				
Sevier County				

[1] This date is November 15, 1990, unless otherwise noted.

Arkansas—Ozone (1-Hour Standard)[2]

Designated area	Designation		Classification	
	Date[1]	Type	Date[1]	Type
AQCR 016 Central Arkansas Intrastate (part) Pulaski County.	.....	Unclassifiable/Attainment		
AQCR 016 Central Arkansas Intrastate (Remainder of).	.....	Unclassifiable/Attainment		
Chicot County				
Clark County				
Cleveland County				
Conway County				
Dallas County				
Desha County				
Drew County				
Faulkner County				
Garland County				
Grant County				
Hot Spring County				
Jefferson County				
Lincoln County				
Lonoke County				
Perry County				
Pope County				
Saline County				
Yell County				
AQCR 017 Metropolitan Fort Smith Interstate	.....	Unclassifiable/Attainment		
Benton County				
Crawford County				
Sebastian County				
Washington County				
AQCR 018 Metropolitan Memphis Interstate	.....	Unclassifiable/Attainment		
Crittenden County				
AQCR 019 Monroe-El Dorado Interstate	.....	Unclassifiable/Attainment		
Ashley County				
Bradley County				
Calhoun County				
Nevada County				
Ouachita County				
Union County				
AQCR 020 Northeast Arkansas Intrastate	.....	Unclassifiable/Attainment		
Arkansas County				
Clay County				
Craighead County				

Arkansas—Ozone (1-Hour Standard)[2]

Designated area	Designation		Classification	
	Date[1]	Type	Date[1]	Type
Cross County				
Greene County				
Independence County				
Jackson County				
Lawrence County				
Lee County				
Mississippi County				
Monroe County				
Phillips County				
Poinsett County				
Prairie County				
Randolph County				
Sharp County				
St. Francis County				
White County				
Woodruff County				
AQCR 021 Northwest Arkansas Intrastate	.....	Unclassifiable/Attainment		
Baxter County				
Boone County				
Carroll County				
Cleburne County				
Franklin County				
Fulton County				
Izard County				
Johnson County				
Logan County				
Madison County				
Marion County				
Montgomery County				
Newton County				
Pike County				
Polk County				
Scott County				
Searcy County				
Stone County				
Van Buren County				
AQCR 022 Shreveport-Texarkana-Tyler Interstate	.....	Unclassifiable/Attainment		
Columbia County				
Hempstead County				
Howard County				
Lafayette County				
Little River County				
Miller County				
Sevier County				

[1] This date is October 18, 2000, unless otherwise noted.
[2] The 1-hour ozone standard is revoked effective June 15, 2005 for all areas in Arkansas.

Arkansas—PM–10

Designated area	Designation		Classification	
	Date	Type	Date	Type
AQCR 016 Central Arkansas Intrastate		Unclassifiable		Unclassifiable.
AQCR 017 Metropolitan Fort Smith Interstate		Unclassifiable		Unclassifiable.
AQCR 018 Metropolitan Memphis Intrastate		Unclassifiable		Unclassifiable.
AQCR 019 Monroe (Louisiana)-El Dorado Interstate		Unclassifiable		Unclassifiable.
AQCR 020 Northeast Arkansas Intrastate		Unclassifiable		Unclassifiable.
AQCR 021 Northwest Arkansas Intrastate		Unclassifiable		Unclassifiable.
AQCR 022 Shreveport-Texarkana-Tyler Interstate		Unclassifiable		Unclassifiable.

Arkansas—NO_2 (1971 Annual Standard)

Designated area	Does not meet primary standards	Cannot be classified or better than national standards
AQCR 016		X
AQCR 017		X
AQCR 018		X

Arkansas—NO_2 (1971 Annual Standard)

Designated area	Does not meet primary standards	Cannot be classified or better than national standards
AQCR 019		X
AQCR 020		X
AQCR 021		X
AQCR 022		X

Arkansas—NO_2 (2010 1-Hour Standard)

Designated area	Designation [a]	
	Date [1]	Type
Ashley County		Unclassifiable/Attainment.
Arkansas County		Unclassifiable/Attainment.
Baxter County		Unclassifiable/Attainment.
Benton County		Unclassifiable/Attainment.
Boone County		Unclassifiable/Attainment.
Bradley County		Unclassifiable/Attainment.
Calhoun County		Unclassifiable/Attainment.
Carroll County		Unclassifiable/Attainment.
Chicot County		Unclassifiable/Attainment.
Clark County		Unclassifiable/Attainment.
Clay County		Unclassifiable/Attainment.
Cleburne County		Unclassifiable/Attainment.
Cleveland County		Unclassifiable/Attainment.
Columbia County		Unclassifiable/Attainment.
Conway County		Unclassifiable/Attainment.
Craighead County		Unclassifiable/Attainment.
Crawford County		Unclassifiable/Attainment.
Crittenden County		Unclassifiable/Attainment.
Cross County		Unclassifiable/Attainment.
Dallas County		Unclassifiable/Attainment.
Desha County		Unclassifiable/Attainment.
Drew County		Unclassifiable/Attainment.
Faulkner County		Unclassifiable/Attainment.
Franklin County		Unclassifiable/Attainment.
Fulton County		Unclassifiable/Attainment.
Garland County.		Unclassifiable/Attainment.
Grant County		Unclassifiable/Attainment.
Greene County		Unclassifiable/Attainment.
Hempstead County		Unclassifiable/Attainment.
Hot Spring County		Unclassifiable/Attainment.
Howard County.		Unclassifiable/Attainment.
Independence County		Unclassifiable/Attainment.
Izard Count		Unclassifiable/Attainment.
Jackson County		Unclassifiable/Attainment.
Jefferson County.		Unclassifiable/Attainment.
Johnson County		Unclassifiable/Attainment.
Lafayette County		Unclassifiable/Attainment.
Lawrence County		Unclassifiable/Attainment.
Lee County		Unclassifiable/Attainment.
Lincoln County		Unclassifiable/Attainment.
Little River County		Unclassifiable/Attainment.
Logan County		Unclassifiable/Attainment.
Lonoke County		Unclassifiable/Attainment.
Madison County		Unclassifiable/Attainment.
Marion County		Unclassifiable/Attainment.
Miller County		Unclassifiable/Attainment.
Mississippi County		Unclassifiable/Attainment.
Monroe County		Unclassifiable/Attainment.
Montgomery County		Unclassifiable/Attainment.
Nevada County		Unclassifiable/Attainment.
Newton County		Unclassifiable/Attainment.
Ouachita County		Unclassifiable/Attainment.
Perry County		Unclassifiable/Attainment.
Phillips County		Unclassifiable/Attainment.
Pike County		Unclassifiable/Attainment.
Poinsett County		Unclassifiable/Attainment.
Polk County		Unclassifiable/Attainment.
Pope County		Unclassifiable/Attainment.

Arkansas—NO_2 (2010 1-Hour Standard)

Designated area	Designation [a]	
	Date [1]	Type
Prairie County		Unclassifiable/Attainment.
Pulaski County		Unclassifiable/Attainment.
Randolph County		Unclassifiable/Attainment.
St. Francis County		Unclassifiable/Attainment.
Saline County		Unclassifiable/Attainment.
Scott County		Unclassifiable/Attainment.
Searcy County		Unclassifiable/Attainment.
Sebastian County		Unclassifiable/Attainment
Sevier County		Unclassifiable/Attainment.
Sharp County		Unclassifiable/Attainment.
Stone County		Unclassifiable/Attainment.
Union County		Unclassifiable/Attainment.
Van Buren County		Unclassifiable/Attainment.
Washington County		Unclassifiable/Attainment.
White County		Unclassifiable/Attainment.
Woodruff County		Unclassifiable/Attainment.
Yell County		Unclassifiable/Attainment.

[a] Includes Indian Country located in each county or area, except as otherwise specified.
[1] This date is 90 days after October 31, 2011, unless otherwise noted.

Arkansas—Ozone (8-Hour Standard)

Designated area	Designation [a]		Category/classification	
	Date [1]	Type	Date [1]	Type
Memphis, TN-AR: (AQCR Metropolitan Memphis Interstate) Crittenden County	([3])	Attainment	([3])	
AQCR 016 Central Arkansas Intrastate (part)		Unclassifiable/Attainment		
Pulaski County				
AQCR 016 Central Arkansas Intrastate (remainder of).		Unclassifiable/Attainment		
Chicot County				
Clark County				
Cleveland County				
Conway County				
Dallas County				
Desha County				
Drew County				
Faulkner County				
Garland County				
Grant County				
Hot Spring County				
Jefferson County				
Lincoln County				
Lonoke County				
Perry County				
Pope County				
Saline County				
Yell County				
AQCR 017 Metropolitan Fort Smith Interstate		Unclassifiable/Attainment		
Benton County				
Crawford County				
Sebastian County				
Washington County				
AQCR 019 Monroe-El Dorado Interstate		Unclassifiable/Attainment		
Ashley County				
Bradley County				
Calhoun County				
Nevada County				
Ouachita County				
Union County				
AQCR 020 Northeast Arkansas Intrastate		Unclassifiable/Attainment		
Arkansas County				
Clay County				
Craighead County				
Cross County				
Greene County				
Independence County				
Jackson County				
Lawrence County				

Arkansas—Ozone (8-Hour Standard)

Designated area	Designation [a]		Category/classification	
	Date [1]	Type	Date [1]	Type
Lee County				
Mississippi County				
Monroe County				
Phillips County				
Poinsett County				
Prairie County				
Randolph County				
St. Francis County				
Sharp County				
White County				
Woodruff County				
AQCR 021 Northwest Arkansas Intrastate	.....	Unclassifiable/Attainment		
Baxter County				
Boone County				
Carroll County				
Cleburne County				
Franklin County				
Fulton County				
Izard County				
Johnson County				
Logan County				
Madison County				
Marion County				
Montgomery County				
Newton County				
Pike County				
Polk County				
Scott County				
Searcy County				
Stone County				
Van Buren County				
AQCR 022 Shreveport-Texarkana-Tyler Interstate.	.....	Unclassifiable/Attainment		
Columbia County				
Hempstead County				
Howard County				
Lafayette County				
Little River County				
Miller County				
Sevier County				

[a] Includes Indian Country located in each county or area, except as otherwise specified.
[1] This date is June 15, 2004, unless otherwise noted.
[2] April 28, 2008.

Arkansas—$PM_{2.5}$ (Annual NAAQS)

Designated area	Designation [a]	
	Date [1]	Type
AQCR 016 Central Arkansas Intrastate:		
Chicot County	.....	Unclassifiable/Attainment.
Clark County	.....	Unclassifiable/Attainment.
Cleveland County	.....	Unclassifiable/Attainment.
Conway County	.....	Unclassifiable/Attainment.
Dallas County	.....	Unclassifiable/Attainment.
Desha County	.....	Unclassifiable/Attainment.
Drew County	.....	Unclassifiable/Attainment.
Faulkner County	.....	Unclassifiable/Attainment.
Garland County	.....	Unclassifiable/Attainment.
Grant County	.....	Unclassifiable/Attainment.
Hot Spring County	.....	Unclassifiable/Attainment.
Jefferson County	.....	Unclassifiable/Attainment.
Lincoln County	.....	Unclassifiable/Attainment.
Lonoke County	.....	Unclassifiable/Attainment.
Perry County	.....	Unclassifiable/Attainment.
Pope County	.....	Unclassifiable/Attainment.
Pulaski County	.....	Unclassifiable/Attainment.
Saline County	.....	Unclassifiable/Attainment.
Yell County	.....	Unclassifiable/Attainment.
AQCR 017 Metropolitan Fort Smith Interstate:		
Benton County	.....	Unclassifiable/Attainment.

Arkansas—$PM_{2.5}$ (Annual NAAQS)

Designated area	Designation [a]	
	Date [1]	Type
Crawford County		Unclassifiable/Attainment.
Sebastian County		Unclassifiable/Attainment.
Washington County		Unclassifiable/Attainment.
AQCR 019 Monroe-El Dorado Interstate:		
Ashley County		Unclassifiable/Attainment.
Bradley County		Unclassifiable/Attainment.
Calhoun County		Unclassifiable/Attainment.
Nevada County		Unclassifiable/Attainment.
Ouachita County		Unclassifiable/Attainment.
Union County		Unclassifiable/Attainment.
AQCR 020 Northeast Arkansas Intrastate:		
Arkansas County		Unclassifiable/Attainment.
Clay County		Unclassifiable/Attainment.
Craighead County		Unclassifiable/Attainment.
Cross County		Unclassifiable/Attainment.
Greene County		Unclassifiable/Attainment.
Independence County		Unclassifiable/Attainment.
Jackson County		Unclassifiable/Attainment.
Lawrence County		Unclassifiable/Attainment.
Lee County		Unclassifiable/Attainment.
Mississippi County		Unclassifiable/Attainment.
Monroe County		Unclassifiable/Attainment.
Phillips County		Unclassifiable/Attainment.
Poinsett County		Unclassifiable/Attainment.
Prairie County		Unclassifiable/Attainment.
Randolph County		Unclassifiable/Attainment.
St. Francis County		Unclassifiable/Attainment.
Sharp County		Unclassifiable/Attainment.
White County		Unclassifiable/Attainment.
Woodruff County		Unclassifiable/Attainment.
AQCR 021 Northwest Arkansas Intrastate:		
Baxter County		Unclassifiable/Attainment.
Boone County		Unclassifiable/Attainment.
Carroll County		Unclassifiable/Attainment.
Cleburne County		Unclassifiable/Attainment.
Franklin County		Unclassifiable/Attainment.
Fulton County		Unclassifiable/Attainment.
Izard County		Unclassifiable/Attainment.
Johnson County		Unclassifiable/Attainment.
Logan County		Unclassifiable/Attainment.
Madison County		Unclassifiable/Attainment.
Marion County		Unclassifiable/Attainment.
Montgomery County		Unclassifiable/Attainment.
Newton County		Unclassifiable/Attainment.
Pike County		Unclassifiable/Attainment.
Polk County		Unclassifiable/Attainment.
Scott County		Unclassifiable/Attainment.
Searcy County		Unclassifiable/Attainment.
Stone County		Unclassifiable/Attainment.
Van Buren County		Unclassifiable/Attainment.
AQCR 022 Shreveport-Texarkana-Tyler Interstate:		
Columbia County		Unclassifiable/Attainment.
Hempstead County		Unclassifiable/Attainment.
Howard County		Unclassifiable/Attainment.
Lafayette County		Unclassifiable/Attainment.
Little River County		Unclassifiable/Attainment.
Miller County		Unclassifiable/Attainment.
Sevier County		Unclassifiable/Attainment.
Memphis, TN-AR:		
(AQCR 018 Metropolitan Memphis Interstate):		
Crittenden County		Unclassifiable/Attainment.

[a] Includes Indian Country located in each county or area, except as otherwise specified.
[1] This date is 90 days after January 5, 2005, unless otherwise noted.

Arkansas—$PM_{2.5}$ [24-hour NAAQS]

Designated area	Designation for the 1997 NAAQS [a]		Designation for the 2006 NAAQS [a]	
	Date [1]	Type	Date [2]	Type
AQCR 016 Central Arkansas Intrastate:				

Arkansas—$PM_{2.5}$ [24-hour NAAQS]

Designated area	Designation for the 1997 NAAQS [a]		Designation for the 2006 NAAQS [a]	
	Date [1]	Type	Date [2]	Type
Chicot County		Unclassifiable/Attainment.		Unclassifiable/Attainment.
Clark County		Unclassifiable/Attainment.		Unclassifiable/Attainment.
Cleveland County		Unclassifiable/Attainment.		Unclassifiable/Attainment.
Conway County		Unclassifiable/Attainment.		Unclassifiable/Attainment.
Dallas County		Unclassifiable/Attainment.		Unclassifiable/Attainment.
Desha County		Unclassifiable/Attainment.		Unclassifiable/Attainment.
Drew County		Unclassifiable/Attainment.		Unclassifiable/Attainment.
Faulkner County		Unclassifiable/Attainment.		Unclassifiable/Attainment.
Garland County		Unclassifiable/Attainment.		Unclassifiable/Attainment.
Grant County		Unclassifiable/Attainment.		Unclassifiable/Attainment.
Hot Spring County		Unclassifiable/Attainment.		Unclassifiable/Attainment.
Jefferson County		Unclassifiable/Attainment.		Unclassifiable/Attainment.
Lincoln County		Unclassifiable/Attainment.		Unclassifiable/Attainment.
Lonoke County		Unclassifiable/Attainment.		Unclassifiable/Attainment.
Perry County		Unclassifiable/Attainment.		Unclassifiable/Attainment.
Pope County		Unclassifiable/Attainment.		Unclassifiable/Attainment.
Pulaski County		Unclassifiable/Attainment.		Unclassifiable/Attainment.
Saline County		Unclassifiable/Attainment.		Unclassifiable/Attainment.
Yell County		Unclassifiable/Attainment.		Unclassifiable/Attainment.
AQCR 017 Metropolitan Fort Smith Interstate:				
Benton County		Unclassifiable/Attainment.		Unclassifiable/Attainment.
Crawford County		Unclassifiable/Attainment.		Unclassifiable/Attainment.
Sebastian County		Unclassifiable/Attainment.		Unclassifiable/Attainment.
Washington County		Unclassifiable/Attainment.		Unclassifiable/Attainment.
AQCR 019 Monroe-El Dorado Interstate:				
Ashley County		Unclassifiable/Attainment.		Unclassifiable/Attainment.
Bradley County		Unclassifiable/Attainment.		Unclassifiable/Attainment.
Calhoun County		Unclassifiable/Attainment.		Unclassifiable/Attainment.
Nevada County		Unclassifiable/Attainment.		Unclassifiable/Attainment.
Ouachita County		Unclassifiable/Attainment.		Unclassifiable/Attainment.
Union County		Unclassifiable/Attainment.		Unclassifiable/Attainment.
AQCR 020 Northeast Arkansas Intrastate:				
Arkansas County		Unclassifiable/Attainment.		Unclassifiable/Attainment.
Clay County		Unclassifiable/Attainment.		Unclassifiable/Attainment.
Craighead County		Unclassifiable/Attainment.		Unclassifiable/Attainment.
Cross County		Unclassifiable/Attainment.		Unclassifiable/Attainment.

Arkansas—$PM_{2.5}$ [24-hour NAAQS]

Designated area	Designation for the 1997 NAAQS [a]		Designation for the 2006 NAAQS [a]	
	Date [1]	Type	Date [2]	Type
Greene County		Unclassifiable/Attainment.		Unclassifiable/Attainment.
Independence County		Unclassifiable/Attainment.		Unclassifiable/Attainment.
Jackson County		Unclassifiable/Attainment.		Unclassifiable/Attainment.
Lawrence County		Unclassifiable/Attainment.		Unclassifiable/Attainment.
Lee County		Unclassifiable/Attainment.		Unclassifiable/Attainment.
Mississippi County		Unclassifiable/Attainment.		Unclassifiable/Attainment.
Monroe County		Unclassifiable/Attainment.		Unclassifiable/Attainment.
Phillips County		Unclassifiable/Attainment.		Unclassifiable/Attainment.
Poinsett County		Unclassifiable/Attainment.		Unclassifiable/Attainment.
Prairie County		Unclassifiable/Attainment.		Unclassifiable/Attainment.
Randolph County		Unclassifiable/Attainment.		Unclassifiable/Attainment.
St. Francis County		Unclassifiable/Attainment.		Unclassifiable/Attainment.
Sharp County		Unclassifiable/Attainment.		Unclassifiable/Attainment.
White County		Unclassifiable/Attainment.		Unclassifiable/Attainment.
Woodruff County		Unclassifiable/Attainment.		Unclassifiable/Attainment.
AQCR 021 Northwest Arkansas Intrastate:				
Baxter County		Unclassifiable/Attainment.		Unclassifiable/Attainment.
Boone County		Unclassifiable/Attainment.		Unclassifiable/Attainment.
Carroll County		Unclassifiable/Attainment.		Unclassifiable/Attainment.
Cleburne County		Unclassifiable/Attainment.		Unclassifiable/Attainment.
Franklin County		Unclassifiable/Attainment.		Unclassifiable/Attainment.
Fulton County		Unclassifiable/Attainment.		Unclassifiable/Attainment.
Izard County		Unclassifiable/Attainment.		Unclassifiable/Attainment.
Johnson County		Unclassifiable/Attainment.		Unclassifiable/Attainment.
Logan County		Unclassifiable/Attainment.		Unclassifiable/Attainment.
Madison County		Unclassifiable/Attainment.		Unclassifiable/Attainment.
Marion County		Unclassifiable/Attainment.		Unclassifiable/Attainment.
Montgomery County		Unclassifiable/Attainment.		Unclassifiable/Attainment.
Newton County		Unclassifiable/Attainment.		Unclassifiable/Attainment.
Pike County		Unclassifiable/Attainment.		Unclassifiable/Attainment.
Polk County		Unclassifiable/Attainment.		Unclassifiable/Attainment.
Scott County		Unclassifiable/Attainment.		Unclassifiable/Attainment.
Searcy County		Unclassifiable/Attainment.		Unclassifiable/Attainment.
Stone County		Unclassifiable/Attainment.		Unclassifiable/Attainment.
Van Buren County		Unclassifiable/Attainment.		Unclassifiable/Attainment.
AQCR 022 Shreveport-Texarkana-Tyler Interstate:				

Arkansas—$PM_{2.5}$ [24-hour NAAQS]

Designated area	Designation for the 1997 NAAQS [a]		Designation for the 2006 NAAQS [a]	
	Date [1]	Type	Date [2]	Type
Columbia County		Unclassifiable/Attainment.		Unclassifiable/Attainment.
Hempstead County		Unclassifiable/Attainment.		Unclassifiable/Attainment.
Howard County		Unclassifiable/Attainment.		Unclassifiable/Attainment.
Lafayette County		Unclassifiable/Attainment.		Unclassifiable/Attainment.
Little River County		Unclassifiable/Attainment.		Unclassifiable/Attainment.
Miller County		Unclassifiable/Attainment.		Unclassifiable/Attainment.
Sevier County		Unclassifiable/Attainment.		Unclassifiable/Attainment.
Memphis, TN-AR: (AQCR 018 Metropolitan Memphis Interstate):				
Crittenden County		Unclassifiable/Attainment.		Unclassifiable/Attainment.

[a] Includes Indian Country located in each county or area, except as otherwise specified.
[1] This date is 90 days after January 5, 2005, unless otherwise noted.
[2] This date is 30 days after November 13, 2009, unless otherwise noted.

Arkansas—2008 Lead NAAQS

Designated area	Designation for the 2008 NAAQS [a]	
	Date [1]	Type
Whole State		Unclassifiable/Attainment.

[a] Includes Indian Country located in each county or area, except as otherwise specified.
[1] December 31, 2011 unless otherwise noted.

[43 FR 8964, Mar. 3, 1978, as amended at 43 FR 40421, Sept. 11, 1978; 49 FR 37754, Sept. 26, 1984; 56 FR 56721, Nov. 6, 1991; 63 FR 31025, June 5, 1998; 65 FR 45205, July 20, 2000; 65 FR 61109, Oct. 16, 2000; 69 FR 23880, Apr. 30, 2004; 69 FR 56708, Sept. 22, 2004; 70 FR 954, Jan. 5, 2005; 70 FR 44475, Aug. 3, 2005; 73 FR 16553, Mar. 28, 2008; 74 FR 58704, Nov. 13, 2009; 75 FR 14080, Mar. 24, 2010; 76 FR 72105, Nov. 22, 2011; 77 FR 9539, Feb. 17, 2012]

EFFECTIVE DATE NOTES: 1. At 77 FR 30098, May 21, 2012, §81.304 was amended by revising the table heading for ''Arkansas—Ozone (8-Hour Standard)'' to read ''Arkansas—1997 8-Hour Ozone NAAQS (Primary and Secondary)''; adding a new table entitled ''Arkansas—2008 8-Hour Ozone NAAQS (Primary and Secondary)'' following the newly designated table ''Arkansas—1997 8-Hour Ozone NAAQS (Primary and Secondary)'', effective July 20, 2012. For the convenience of the user, the added text is set forth as follows:

§81.304 Arkansas.

* * * * *

Arkansas—2008 8-Hour Ozone NAAQS(Primary and secondary)

Designated area	Designation		Classification	
	Date [1]	Type	Date [1]	Type
Memphis, TN-MS-AR [2] Crittenden County		Nonattainment		Marginal.
Rest of State: [3]				
Ashley County		Unclassifiable/Attainment		
Arkansas County		Unclassifiable/Attainment		
Baxter County		Unclassifiable/Attainment		
Benton County		Unclassifiable/Attainment		
Boone County		Unclassifiable/Attainment		
Bradley County		Unclassifiable/Attainment		
Calhoun County		Unclassifiable/Attainment		
Carroll County		Unclassifiable/Attainment		
Chicot County		Unclassifiable/Attainment		
Clark County		Unclassifiable/Attainment		
Clay County		Unclassifiable/Attainment		
Cleburne County		Unclassifiable/Attainment		

Arkansas—2008 8-Hour Ozone NAAQS(Primary and secondary)

Designated area	Designation		Classification	
	Date [1]	Type	Date [1]	Type
Cleveland County		Unclassifiable/Attainment		
Columbia County		Unclassifiable/Attainment		
Conway County		Unclassifiable/Attainment		
Craighead County		Unclassifiable/Attainment		
Crawford County		Unclassifiable/Attainment		
Crittenden County		Unclassifiable/Attainment		
Cross County		Unclassifiable/Attainment		
Dallas County		Unclassifiable/Attainment		
Desha County		Unclassifiable/Attainment		
Drew County		Unclassifiable/Attainment		
Faulkner County		Unclassifiable/Attainment		
Franklin County		Unclassifiable/Attainment		
Fulton County		Unclassifiable/Attainment		
Garland County		Unclassifiable/Attainment		
Grant County		Unclassifiable/Attainment		
Greene County		Unclassifiable/Attainment		
Hempstead County		Unclassifiable/Attainment		
Hot Spring County		Unclassifiable/Attainment		
Howard County		Unclassifiable/Attainment		
Independence County		Unclassifiable/Attainment		
Izard County		Unclassifiable/Attainment		
Jackson County		Unclassifiable/Attainment		
Jefferson County		Unclassifiable/Attainment		
Johnson County		Unclassifiable/Attainment		
Lafayette County		Unclassifiable/Attainment		
Lawrence County		Unclassifiable/Attainment		
Lee County		Unclassifiable/Attainment		
Lincoln County		Unclassifiable/Attainment		
Little River County		Unclassifiable/Attainment		
Logan County		Unclassifiable/Attainment		
Lonoke County		Unclassifiable/Attainment		
Madison County		Unclassifiable/Attainment		
Marion County		Unclassifiable/Attainment		
Miller County		Unclassifiable/Attainment		
Mississippi County		Unclassifiable/Attainment		
Monroe County		Unclassifiable/Attainment		
Montgomery County		Unclassifiable/Attainment		
Nevada County		Unclassifiable/Attainment		
Newton County		Unclassifiable/Attainment		
Ouachita County		Unclassifiable/Attainment		
Perry County		Unclassifiable/Attainment		
Phillips County		Unclassifiable/Attainment		
Pike County		Unclassifiable/Attainment		
Poinsett County		Unclassifiable/Attainment		
Polk County		Unclassifiable/Attainment		
Pope County		Unclassifiable/Attainment		
Prairie County		Unclassifiable/Attainment		
Pulaski County		Unclassifiable/Attainment		
Randolph County		Unclassifiable/Attainment		
St. Francis County		Unclassifiable/Attainment		
Saline County		Unclassifiable/Attainment		
Scott County		Unclassifiable/Attainment		
Searcy County		Unclassifiable/Attainment		
Sebastian County		Unclassifiable/Attainment		
Sevier County		Unclassifiable/Attainment		
Sharp County		Unclassifiable/Attainment		
Stone County		Unclassifiable/Attainment		
Union County		Unclassifiable/Attainment		
Van Buren County		Unclassifiable/Attainment		
Washington County		Unclassifiable/Attainment		
White County		Unclassifiable/Attainment		
Woodruff County		Unclassifiable/Attainment		
Yell County		Unclassifiable/Attainment		

[1] This date is July 20, 2012, unless otherwise noted.
[2] Excludes Indian country located in each area, unless otherwise noted.
[3] Includes any Indian country in each county or area, unless otherwise specified.

* * * * *

EFFECTIVE DATE NOTES: 2. At 77 FR 34227, June 11, 2012, § 81.304 was amended by removing the entry for Crittenden County before the entry for Cross County in the table entitled ''Arkansas—2008 8-Hour Ozone NAAQS (Primary and Secondary)'', effective July 20, 2012.

§ 81.305 California.

California—TSP

Designated area	Does not meet primary standards	Does not meet secondary standards	Cannot be classified	Better than national standards
North Coast Air Basin:				
Del Norte County				X
Humboldt County				X
Mendocino County				X
Sonoma County (North Coast Air Basin portion)				X
Trinity County				X
Lake County Air Basin				X
North Central Coast Air Basin				X
South Central Coast Air Basin:				
San Luis Obispo County:				
Salinas Valley-El Pomar Estrella Planning Area				X
Non-Salinas Valley				X
Santa Barbara County (AQMA portion)				X
Santa Barbara County (Non-AQMA portion):				
A. West area of north-south boundary separating Santa Ynez and Lompoc Valleys:				
Santa Maria Area	X			
Outside Santa Maria Area				X
B. East area of north-south boundary separating Santa Ynez and Lompoc Valleys			X	
Ventura County:				
North of 34°23′ North Latitude				X
South of 34°23′ North Latitude	X			
Channel Islands			X	
San Diego Air Basin:				
San Diego County (West portion)	X			
San Diego County (East portion)			X	
South Coast Air Basin	X			
San Joaquin Valley Air Basin	X			
Sacramento Valley Air Basin (SVAB):				
Sacramento County		X		
Solano County (SVAB Portion)			X	
Yolo County			X	
Butte County			X	
Colusa County			X	
Glenn County			X	
Shasta County (Sacramento Valley portion)				X
Sutter County			X	
Tehama County			X	
Yuba County			X	
Great Basin Valleys Air Basin.				
Northeast Plateau Air Basin (NEPAB):				
Shasta County (NEPAB portion)				X
Rest of Air Basin			X	
Southeast Desert Air Basin:				
Kern County (S.E. Desert Air Basin Portion)			X	
Imperial County			X	
Los Angeles County (S.E. Desert Air Basin Portion):				
Lancaster Quartz Hill Area				X
Outside Lancaster Quartz Hill Area			X	
Riverside County (Coachella Valley planning area)			X	
Riverside County (remainder of County).				
San Bernardino County (S.E. Desert AQMA Portion):.				
Victorville Area	X			
Non-Victorville Area			X	
Riverside County (non-AQMA Portion)			X	
San Bernardino County (non-AQMA Portion)			X	
Lake Tahoe Air Basin				X
San Francisco Bay Area Air Basin:				
Solano County (S.F. Bay Area Air Basin portion)				X
San Mateo County				X
Marin County				X
Napa County				X
Sonoma County (S.F. Bay Area Air Basin portion)				X

California—TSP

Designated area	Does not meet primary standards	Does not meet secondary standards	Cannot be classified	Better than national standards
Alameda County				X
Contra Costa County				X
San Francisco County				X
Santa Clara County		X		
Rest of Air Basin		X		
Mountain Counties Air Basin:				
Placer County (AQMA portion)				X
Placer County (excluding AQMA portion and Lake Tahoe portion)				X
Amador County				X
Calaveras County			X	
El Dorado County (excluding Lake Tahoe Air Basin portion)				X
Mariposa County			X	
Nevada County			X	
Plumas County				X
Sierra County				X
Tuolumne County			X	

California—SO_2

Designated area	Does not meet primary standards	Does not meet secondary standards	Cannot be classified	Better than national standards
North Coast Air Basin:				
Del Norte County			X	
Humboldt County			X	
Mendocino County			X	
Sonoma County (North Coast Basin portion)			X	
Trinity County			X	
Lake County Air Basin			X	
San Francisco Bay Area Air Basin				X
North Central Coast Air Basin:				
Monterey County			X	
San Benito County			X	
Santa Cruz County			X	
South Central Coast Air Basin:				
San Luis Obispo County			X	
Santa Barbara County (AQMA portion)			X	
Santa Barbara County (non-AQMA portion)			X	
Ventura County				X
Channel Islands			X	
San Diego Air Basin:				
San Diego County (West portion)				X
San Diego County (East portion)				X
South Coast Air Basin:				
Los Angeles County (South Coast Air Basin portion)				X
Orange County				X
Riverside County (South Coast Air Basin portion)				X
South Coast Basin portion of San Bernardino County.				
San Joaquin Valley Air Basin:				
Fresno County			X	
Kern County				X
Kings County			X	
Madera County			X	
Merced County			X	
San Joaquin County			X	
Stanislaus County			X	
Tulare County			X	
Sacramento Valley Air Basin			X	
Great Basin Valley's Air Basin			X	
North East Plateau Air Basin			X	
Mountain Counties Air Basin			X	
Southeast Desert Air Basin excluding Imperial Co			X	
Imperial County				X
Lake Tahoe Air Basin				X

California—Carbon Monoxide

Designated Area	Designation		Classification	
	Date [1]	Type	Date [1]	Type
Bakersfield Area:				
Kern County (part).				
Bakersfield Metropolitan Area (Urbanized part)	6/1/98	Attainment	.....	
Chico Area:				
Butte County (part)	6/1/98	Attainment		
Chico Urbanized Area (Census Bureau Urbanized part).				
Fresno Area:				
Fresno County (part)	6/1/98	Attainment		
Fresno Urbanized Area				
Lake Tahoe North Shore Area:				
Placer County (part)	June 1, 1998	Attainment		
That portion of Placer County within the drainage area naturally tributary to Lake Tahoe including said Lake, plus that area in the vicinity of the head of the Truckee River described as follows: commencing at the point common to the aforementioned drainage area crestline and the line common to Townships 15 North and 16 North, Mount Diablo Base, and Meridian (M.D.B. & M.), and following that line in a westerly direction to the northwest corner of Section 3, Township 15 North, Range 16 East, M.D.B. & M., thence south along the west line of Sections 3 and 10, Township 15 north, Range 16 East, M.D.B. & M., to the intersection with the said drainage area crestline, thence following the said drainage area boundary in a southeasterly, then northeasterly direction to and along the Lake Tahoe Dam, thence following the said drainage area crestline in a northeasterly, then northwesterly direction to the point of beginning.				
Lake Tahoe South Shore Area:				
El Dorado County (part)	6/1/98	Attainment		
That portion of El Dorado County within the drainage area naturally tributary to Lake Tahoe including said Lake, as described under 40 CFR 81.275.				
Los Angeles-South Coast Air Basin Area	6/11/07	Attainment		
Los Angeles County (part)—that portion of Los Angeles County which lies south and west of a line described as follows:				
1. Beginning at the Los Angeles-San Bernardino County boundary and running west along the township line common to Township 3 North and Township 2 North, San Bernardino Base and Meridian;				
2. Then north along the range line common to Range 8 West and Range 9 West;				
3. Then west along the township line common to Township 4 North and Township 3 North;				
4. Then north along the range line common to Range 12 West and Range 13 West to the southeast corner of Section 12, Township 5 North and Range 13 West;				
5. Then west along the south boundaries of Sections 12, 11, 10, 9, 8, and 7, Township 5 North and Range 13 West to the boundary of the Angeles National Forest which is collinear with the range line common to Range 13 West and Range 14 West;				

California—Carbon Monoxide

Designated Area	Designation		Classification	
	Date [1]	Type	Date [1]	Type
6. Then north and west along the Angeles National Forest boundary to the point of intersection with the township line common to Township 7 North and Township 6 North (point is at the northwest corner of Section 4 in Township 6 North and Range 14 West);				
7. Tthen west along the township line common to Township 7 North and Township 6 North;				
8. Then north along the range line common to Range 15 West and Range 16 West to the southeast corner of Section 13, Township 7 North and Range 16 West;				
9. Then along the south boundaries of Sections 13, 14, 15, 16, 17, and 18, Township 7 North and Range 16 West;				
10. Then north along the range line common to Range 16 West and Range 17 West to the north boundary of the Angeles National Forest (collinear with the township line common to Township 8 North and Township 7 North);				
11. Then west along the Angeles National Forest boundary to the point of intersection with the south boundary of the Rancho La Liebre Land Grant;				
12. Then west and north along this land grant boundary to the Los Angeles-Kern County boundary.				
Orange County:				
Riverside County (part)—that portion of Riverside County which lies to the west of a line described as follows:				
1. Beginning at the Riverside—San Diego County boundary and running north along the range line common to Range 4 East and Range 3 East, San Bernardino Base and Meridian;				
2. Then east along the township line common to Township 8 South and Township 7 South;				
3. Then north along the range line common to Range 5 East and Range 4 East;				
4. Then west along the township line common to Township 6 South and Township 7 South to the southwest corner of Section 34, Township 6 South, Range 4 East;				
5. Then north along the west boundaries of Sections 34, 27, 22, 15, 10, and 3, Township 6 South, Range 4 East;				
6. Then west along the township line common to Township 5 South and Township 6 South;				
7. Then north along the range line common to Range 4 East and Range 3 East;				
8. Then west along the south boundaries of Sections 13, 14, 15, 16, 17, and 18, Township 5 South, Range 3 East;				
9. Then north along the range line common to Range 2 East and Range 3 East to the Riverside-San Bernardino county line.				
San Bernardino County—that portion of San Bernardino County which lies south and west of a line described as follows:				

California—Carbon Monoxide

Designated Area	Designation		Classification	
	Date [1]	Type	Date [1]	Type
1. Beginning at the San Bernardino-Riverside County boundary and running north along the range line common to Range 3 East and Range 2 East, San Bernardino Base and Meridian;				
2. Then west along the township line common to Township 3 North and Township 2 North to the San Bernardino—Los Angeles County boundary.				
Modesto Area:				
Stanislaus County (part)	6/1/98	Attainment	.....	
Modesto Urbanized Area (Census Bureau Urbanized Area).				
Sacramento Area:				
Census Bureau Urbanized Area)	6/1/98	Attainment	.....	
Placer County (part).				
Sacramento County (part).				
Yolo County (part).				
San Diego Area:				
San Diego County (part)	6/1/98	Attainment		
The Western Section of Air Pollution Control District of San Diego County is defined as all that portion of San Diego County, State of California, lying westerly of the following described line:.				
1. Beginning at the Northwest of Township 9 South, Range 1 West, San Bernardino Base and Meridian;				
2. thence running Southerly along the West line of said township to the south line therof;				
3. thence Easterly along said South line to the range line between Range 1 West and Range 1 East;				
4. thence Southerly along said range line to the township line between Township 11 South and 12 South;				
5. thence Easterly along said township line to the range line between Range 1 East and Range 2 East;				
6. thence Southerly along said range line to the international boundary between the United States of America and Mexico.				
San Francisco-Oakland-San Jose Area:				
Urbanized Areas	6/1/98	Attainment		
Alameda County (part).				
Contra Costa County (part).				
Marin County (part).				
Napa County (part).				
San Francisco County.				
San Mateo County (part).				
Santa Clara County (part).				
Solano County (part).				
Sonoma County (part).				
Stockton Area:				
San Joaquin County (part)	6/1/98	Attainment		
Stockton Urbanized Area.				
Great Basin Valley Air Basin	.....	Unclassifiable/Attainment		
Alpine County				
Inyo County				
Mono County				
Lake County Air Basin				
Lake County	.....	Unclassifiable/Attainment		
Mountain Counties Air Basin				
Amador County	.....	Unclassifiable/Attainment		

California—Carbon Monoxide

Designated Area	Designation		Classification	
	Date [1]	Type	Date [1]	Type
Calaveras County		Unclassifiable/Attainment		
El Dorado County (part)				
excluding Lake Tahoe South Shore		Unclassifiable/Attainment		
Mariposa County		Unclassifiable/Attainment		
Nevada County		Unclassifiable/Attainment		
Placer County (part)				
excluding Lake Tahoe Air Basin portion and AQMA portion.		Unclassifiable/Attainment		
AQMA portion (of Placer County)		Unclassifiable/Attainment		
Plumas County		Unclassifiable/Attainment		
Sierra County		Unclassifiable/Attainment		
Tuolumne County		Unclassifiable/Attainment		
North Central Coast Air Basin				
Monterey County		Unclassifiable/Attainment		
San Benito County		Unclassifiable/Attainment		
Santa Cruz County		Unclassifiable/Attainment		
North Coast Air Basin		Unclassifiable/Attainment		
Del Norte County				
Humboldt County				
Mendocino County				
Sonoma County (part)				
Remainder of County				
Trinity County				
Northeast Plateau Air Basin		Unclassifiable/Attainment		
Lassen County				
Modoc County				
Siskiyou County				
Sacramento Valley Air Basin (portion)				
Butte County (part)				
Area other than Chico Urbanized Area (Census Bureau urbanized part).		Unclassifiable/Attainment		
Colusa County		Unclassifiable/Attainment		
Glenn County		Unclassifiable/Attainment		
Sacramento County (part)				
Area other than Census Bureau urbanized areas.		Unclassifiable/Attainment		
Shasta County		Unclassifiable/Attainment		
Solano County (part)				
Sacramento Valley Air Basin portion		Unclassifiable/Attainment		
Sutter County		Unclassifiable/Attainment		
Tehama County		Unclassifiable/Attainment		
Yolo County (part)				
Area outside Census Bureau urbanized areas.		Unclassifiable/Attainment		
Yuba County		Unclassifiable/Attainment		
San Diego Air Basin (Remainder of)				
San Diego County (part)				
Remainder of County		Unclassifiable/Attainment		
San Francisco Bay Area Air Basin		Unclassifiable/Attainment		
Area other than urbanized Areas				
Alameda County (part)				
Contra Costa County (part)				
Marin County (part)				
Napa County (part)				
San Mateo County (part)				
Santa Clara County (part)				
Solano County (part)				
Sonoma County (part)				
San Joaquin Valley Air Basin				
Fresno County (part)				
Outside Fresno Urbanized Area		Unclassifiable/Attainment		
Kern County (part)				
Area other than Bakersfield Metropolitan Area (Urbanized part).		Unclassifiable/Attainment		
Kings County		Unclassifiable/Attainment		
Madera County		Unclassifiable/Attainment		
Merced County		Unclassifiable/Attainment		
San Joaquin County (part)				
Outside Stockton urbanized area		Unclassifiable/Attainment		
Stanislaus County (part)				
Outside Modesto Urbanized Area (Census Bureau Urbanized Area).		Unclassifiable/Attainment		

California—Carbon Monoxide

Designated Area	Designation		Classification	
	Date [1]	Type	Date [1]	Type
Tulare County	.....	Unclassifiable/Attainment		
South Central Coast Air Basin				
Channel Islands	.....	Unclassifiable/Attainment		
San Luis Obispo County	.....	Unclassifiable/Attainment		
Santa Barbara County	.....	Unclassifiable/Attainment		
Ventura County	.....	Unclassifiable/Attainment		
Southeast Desert Air Basin				
Imperial County	.....	Unclassifiable/Attainment		
Kern County (part)				
excluding San Joaquin Valley portion	.....	Unclassifiable/Attainment		
Los Angeles County				
excluding Los Angeles - South Coast Air Basin portion.	.....	Unclassifiable/Attainment		
Riverside County (part) Portion excluding Los Angeles-South Coast Air Basin	.....	Unclassifiable/Attainment.		
San Bernardino Co(part)				
AQMA portion (excluding Los Angeles - South Coast Air Basin).	.....	Unclassifiable/Attainment		
Non-AQMA portion (excluding Los Angeles - South Coast Air Basin).	.....	Unclassifiable/Attainment		

[1] This date is November 15, 1990, unless otherwise noted.

California—Ozone (1-Hour Standard)[4]

Designated area	Designation		Classification	
	Date [1]	Type	Date [1]	Type
Chico Area:				
Butte County	(3)	Nonattainment	(3)	Sec. 185A Area.[2]
Imperial County Area:				
Imperial County	11/15/90	Nonattainment	11/15/90	Sec. 185A Area.[2]
Los Angeles-South Coast Air Basin Area	11/15/90	Nonattainment	11/15/90	Extreme.
Los Angeles County (part)—that portion of Los Angeles County which lies south and west of a line described as follows:				
1. Beginning at the Los Angeles—San Bernardino County boundary and running west along the Township line common to Township 3 North and Township 2 North, San Bernardino Base and Meridian;				
2. then north along the range line common to Range 8 West and Range 9 West;				
3. then west along the Township line common to Township 4 North and Township 3 North;				
4. then north along the range line common to Range 12 West and Range 13 West to the southeast corner of Section 12, Township 5 North and Range 13 West;				
5. then west along the south boundaries of Sections 12, 11, 10, 9, 8, and 7, Township 5 North and Range 13 West to the boundary of the Angeles National Forest which is collinear with the range line common to Range 13 West and Range 14 West;				

California—Ozone (1-Hour Standard)[4]

Designated area	Designation		Classification	
	Date [1]	Type	Date [1]	Type
6. then north and west along the Angeles National Forest boundary to the point of intersection with the Township line common to Township 7 North and Township 6 North (point is at the northwest corner of Section 4 in Township 6 North and Range 14 West); 7. then west along the Township line common to Township 7 North and Township 6 North; 8. then north along the range line common to Range 15 West and Range 16 West to the southeast corner of Section 13, Township 7 North and Range 16 West; 9. then along the south boundaries of Sections 13, 14, 15, 16, 17, and 18, Township 7 North and Range 16 West; 10. then north along the range line common to Range 16 West and Range 17 West to the north boundary of the Angeles National Forest (collinear with the Township line common to Township 8 North and Township 7 North); 11. then west along the Angeles National Forest boundary to the point of intersection with the south boundary of the Rancho La Liebre Land Grant; 12. then west and north along this land grant boundary to the Los Angeles-Kern County boundary.				
Orange County	11/15/90	Nonattainment	11/15/90	Extreme.
Riverside County (part) that portion of Riverside County which lies to the west of a line described as follows: 1. Beginning at the Riverside-San Diego County boundary and running north along the range line common to Range 4 East and Range 3 East, San Bernardino Base and Meridian; 2. then east along the Township line common to Township 8 South and Township 7 South; 3. then north along the range line common to Range 5 East and Range 4 East; 4. then west along the Township line common to Township 6 South and Township 7 South to the southwest corner of Section 34, Township 6 South, Range 4 East; 5. then north along the west boundaries of Sections 34, 27, 22, 15, 10, and 3, Township 6 South, Range 4 East; 6. then west along the Township line common to Township 5 South and Township 6 South; 7. then north along the range line common to Range 4 East and Range 3 East; 8. then west along the south boundaries of Sections 13, 14, 15, 16, 17, and 18, Township 5 South, Range 3 East; 9. then north along the range line common to Range 2 East and Range 3 East to the Riverside-San Bernardino county line.	11/15/90	Nonattainment	11/15/90	Extreme.
San Bernardino County (part)—that portion of San Bernardino County which lies south and west of a line described as follows:.	11/15/90	Nonattainment	11/15/90	Extreme.

California—Ozone (1-Hour Standard)[4]

Designated area	Designation		Classification	
	Date [1]	Type	Date [1]	Type
1. Beginning at the San Bernardino—Riverside County boundary and running north along the range line common to Range 3 East and Range 2 East, San Bernardino Base and Meridian; 2. then west along the Township line common to Township 3 North and Township 2 North to the San Bernardino—Los Angeles County boundary;				
Monterey Bay Area	.....	Attainment		
Monterey County				
San Benito County				
Santa Cruz County				
Sacramento Metro Area	11/15/90	Nonattainment	6/01/95	Severe-15.
El Dorado County (part):				
All portions of the county except that portion of El Dorado County within the drainage area naturally tributary to Lake Tahoe including said Lake.				
Placer County (part):				
All portions of the county except that portion of Placer County within the drainage area naturally tributary to Lake Tahoe including said Lake, plus that area in the vicinity of the head of the Truckee River described as follows: commencing at the point common to the aforementioned drainage area crestline and the line common to Townships 15 North and 16 North, Mount Diablo Base and Meridian (M.D.B. & M.), and following that line in a westerly direction to the northwest corner of Section 3, Township 15 North, Range 16 East, M.D.B. & M., thence south along the west line of Sections 3 and 10, Township 15 North, Range 16 East, M.D.B. & M., to the intersection with the said drainage area crestline, thence following the said drainage area boundary in a southeasterly, then northeasterly direction to and along the Lake Tahoe Dam, thence following the said drainage area crestline in a northeasterly, then northwesterly direction to the point of beginning.	11/15/90	Nonattainment	6/01/95	Severe-15.
Sacramento County	11/15/90	Nonattainment	6/01/95	Severe-15.
Solano County (part) That portion of Solano County which lies north and east of a line described as follows:	11/15/90	Nonattainment	6/01/95	Severe-15.

California—Ozone (1-Hour Standard)[4]

Designated area	Designation		Classification	
	Date [1]	Type	Date [1]	Type
Description of boundary in Solano county between San Francisco and Sacramento: Beginning at the intersection of the westerly boundary of Solano County and the ¼ section line running east and west through the center of Section 34; T. 6 N., R. 2 W., M.D.B. & M., thence east along said ¼ section line to the east boundary of Section 36, T. 6 N., R. 2 W., thence south ½ mile and east 2.0 miles, more or less, along the west and south boundary of Los Putos Rancho to the northwest corner of Section 4, T. 5 N., R. 1 W., thence east along a line common to T. 5 N. and T. 6 N. to the northeast corner of Section 3, T. 5 N., R. 1 E., thence south along section lines to the southeast corner of Section 10, T. 3 N., R. 1 E., thence east along section lines to the south ¼ corner of Section 8, T. 3 N., R. 2 E., thence east to the boundary between Solano and Sacramento Counties	11/15/90	Nonattainment	6/01/95	Severe-15.
Sutter County (part—southern portion)South of a line connecting the northern border of Yolo Co. to the SW tip of Yuba Co. and continuing along the southern Yuba County border to Placer County.	11/15/90	Nonattainment	6/01/95	Severe-15.
Yolo County	11/15/90	Nonattainment	6/01/95	Severe-15.
San Diego Area:.				
San Diego County	7/28/03	Attainment		
San Francisco-Bay Area	8/10/98	Nonattainment	8/10/98	Not classified/ Moderate under 23 U.S.C.
			8/23/99	104(b)(2).
Alameda County	8/10/98	.....do	8/23/99	Do.
Contra Costa County	8/10/98	.....do	8/23/99	Do.
Marin County	8/10/98	.....do	8/23/99	Do.
Napa County	8/10/98	.....do	8/23/99	Do.
San Francisco County	8/10/98	.....do	8/23/99	Do.
San Mateo County	8/10/98	.....do	8/23/99	Do.
Santa Clara County	8/10/98	.....do	8/23/99	Do.
Solano County (part)	8/10/98	.....do	8/23/99	Do.

California—Ozone (1-Hour Standard)[4]

Designated area	Designation		Classification	
	Date [1]	Type	Date [1]	Type
That portion of the county that lies south and west of the line described that follows: Description of boundary in Solano County between San Francisco and Sacramento: Beginning at the intersection at the westerly boundary of Solano County and the ¼ section line running east and west through the center of Section 34; T.6 N., R. 2 W., M.D.B. & M., thence east along said ½ section line to the east boundary of Section 36, T. 6 N., R. 2 W., thence south ½ mile and east 2.0 miles, more or less, along the west and south boundary of Los Putos Rancho to the northwest corner of Section 4, T. 5 N., R. 1 W, thence east along a line common to T. 5 N., and T. 6 N. to the northeast corner of Section 3, T. 5 N., R. 1 E., thence south along section lines to the southeast corner of Section 10 T. 3 N., R. 1 E., thence east along section lines to the south ¼ corner of Section 8 T. 3 N., R. 2 E., thence east to the boundary between Solano and Sacramento Counties.				
Sonoma County (part)	8/10/98	.....do	8/23/99	Do.

California—Ozone (1-Hour Standard)[4]

Designated area	Designation		Classification	
	Date [1]	Type	Date [1]	Type
That portion of Sonoma county which lies south and east of a line described as follows: Beginning at the south-easterly corner of the Rancho Estero Americano, being on the boundary line between Marin Sonoma Counties, California; thence running northerly along the easterly boundary line of said Rancho Estero Americano to the north-easterly corner thereof, being an angle corner in the westerly boundary line of Rancho Canada de Jonive, thence running along said boundary of Rancho Canada de Jonive westerly,; northerly and easterly to its intersection with the easterly line of Granton Road; thence running along the easterly and southerly line of Granton Road northerly and easterly to its intersection with the easterly line of Sullivan Road; thence running northerly along said easterly line of Sullivan Road to the southerly line of Green Valley Road; thence running easterly along the said southerly line of Green Valley Road and easterly along the southerly line of State Highway 116, to the westerly and northerly line of Vine Hill Road; thence running along the westerly and northerly line of Vine Hill Road, northerly and easterly to its intersection with the westerly line of Laguna Road; thence running northerly along the westerly line of Laguna Road and the northerly projection thereof to the northerly line of Trenton Road; thence running westerly along the northerly line of said Trenton Road to the easterly line of Trenton-Healdsburg Road to the easterly line of Eastside Road: thence running northerly along said easterly line of Eastside Road to its intersection with the southerly line of Ranco Sotoyome; thence running easterly along said southerly line of Rancho Sotoyome to its intersection with the Township line common to Townships 8 and 9 north, Mt. Diablo Base and Meridian; thence running easterly along said Township line to its intersection with the boundary line between Sonoma and Napa Counties, State of California.				

California—Ozone (1-Hour Standard)[4]

Designated area	Designation		Classification	
	Date [1]	Type	Date [1]	Type
East Kern County:				
That portion of Kern County that lies east and south of a line described below: Beginning at the Kern-Los Angeles County boundary and running north and east along the northwest boundary of the Rancho La Liebre Land Grant to the point of intersection with the range line common to Range 16 West and Range 17 West, San Bernardino Base and Meridian; north along the range line to the point of intersection with the Rancho El Tejon Land Grant boundary; then southeast, northeast, and northwest along the boundary of the Rancho El Tejon Grant to the northwest corner of Section 3, Township 11 North, Range 17 West; then west 1.2 miles; then north to the Rancho El Tejon Land Grant boundary; then northwest along the Rancho El Tejon line to the southeast corner of Section 34, Township 32 South, Range 30 East, Mount Diablo Base and Meridian; then north to the northwest corner of Section 35, Township 31 South, Range 30 East, then northeast along the boundary of the Rancho El Tejon Land Grant to the southwest corner of Section 18, Township 31 South, Range 31 East; then east to the southeast corner of Section 13, Township 31 South, Range 31 East; then north along the range line common to Range 31 East and Range 32 East, Mount Diablo Base and Meridian, to the northwest corner of Section 6, Township 29 South, Range 32 East; then east to the southwest corner of Section 31, Township 28 South, Range 32 East; then north along the range line common to Range 31 East and Range 32 East to the northwest corner of Section 6, Township 28 South, Range 32 East, then west to the southeast corner of Section 36, Township 27 South, Range 31 East, then north along the range line common to Range 31 East and Range 32 East to the Kern-Tulare County Boundary.	6/21/04	Attainment		
San Joaquin Valley Area:				
Fresno County	11/15/90	Nonattainment	05/17/04	Extreme
Kern County (part). That portion of Kern County that lies west and north of a line described below:.	11/15/90	Nonattainment	05/17/04	Extreme

California—Ozone (1-Hour Standard)[4]

Designated area	Designation		Classification	
	Date [1]	Type	Date [1]	Type
Beginning at the Kern-Los Angeles County boundary and running north and east along the northwest boundary of the Rancho La Pliebre Land Grant to the point of intersection with the range line common to Range 16 West and Range 17 West, San Bernardino Base and Meridian; north along the range line to the point of intersection with the Rancho El Tejon Land Grant boundary; then southeast, northeast, and northwest along the boundary of the Rancho El Tejon Grant to the northwest corner of Section 3, Township 11 North, Range 17 West; then west 1.2 miles; then north to the Rancho El Tejon Land Grant boundary; then northwest along the Rancho El Tejon line to the southeast corner of Section 34, Township 32 South, Range 30 East, Mount Diablo Base and Meridian; then north to the northwest corner of Section 35, Township 31 South, Range 30 East; then northeast along the boundary of the Rancho El Tejon Land Grant to the southwest corner of Section 18, Township 31 South, Range 31 East; then east to the southeast corner of Section 13, Township 31 South, Range 31 East; then north along the range line common to Range 31 East and Range 32 East, Mount Diablo Base and Meridian, to the northwest corner of Section 6, Township 29 South, Range 32 East; then east to the southwest corner of Section 31, Township 28 South, Range 32 East; then north along the range line common to Range 31 East and Range 32 East to the northwest corner of Section 6, Township 28 South, Range 32 East, then west to the southeast corner of Section 36, Township 27 South, Range 31 East, then north along the range line common to Range 31 East and Range 32 East to the Kern-Tulare County boundary:.				
Kings County	11/15/90	Nonattainment	05/17/04	Extreme
Madera County	11/15/90	Nonattainment	05/17/04	Extreme
Merced County	11/15/90	Nonattainment	05/17/04	Extreme
San Joaquin County	11/15/90	Nonattainment	05/17/04	Extreme
Stanislaus County	11/15/90	Nonattainment	05/17/04	Extreme
Tulare County	11/15/90	Nonattainment	05/17/04	Extreme
Santa Barbara-Santa Maria-Lompoc Area:				
Santa Barbara County	8/8/03	Attainment		
Southeast Desert Modified AQMA Area	11/15/90	Nonattainment	11/15/90	Severe-17.
Los Angeles County (part)—that portion of Los Angeles County which lies north and east of a line described as follows:				
1. Beginning at the Los Angeles—San Bernardino County boundary and running west along the Township line common to Township 3 North and Township 2 North, San Bernardino Base and Meridian;				
2. then north along the range line common to Range 8 West and Range 9 West;				
3. then west along the Township line common to Township 4 North and Township 3 North;				

California—Ozone (1-Hour Standard)[4]

Designated area	Designation		Classification	
	Date [1]	Type	Date [1]	Type
4. then north along the range line common to Range 12 West and Range 13 West to the southeast corner of Section 12, Township 5 North and Range 13 West; 5. then west along the south boundaries of Sections 12, 11, 10, 9, 8, and 7, Township 5 North and Range 13 West to the boundary of the Angeles National Forest which is collinear with the range line common to Range 13 West and Range 14 West; 6. then north and west along the Angeles National Forest boundary to the point of intersection with the Township line common to Township 7 North and Township 6 North (point is at the northwest corner of Section 4 in Township 6 North and Range 14 West); 7. then west along the Township line common to Township 7 North and Township 6 North; 8. then north along the range line common to Range 15 West and Range 16 West to the southeast corner of Section 13, Township 7 North and Range 16 West; 9. then along the south boundaries of Sections 13, 14, 15, 16, 17, and 18, Township 7 North and Range 16 West; 10. then north along the range line common to Range 16 West and Range 17 West to the north boundary of the Angeles National Forest (collinear with the Township line common to Township 8 North and Township 7 North); 11. then west along the Angeles National Forest boundary to the point of intersection with the south boundary of the Rancho La Liebre Land Grant; 12. then west and north along this land grant boundary to the Los Angeles-Kern County boundary.				
Riverside County	11/15/90	Nonattainment	11/15/90	Severe-17
Coachella Valley planning area—that portion of Riverside County which lies to the east of a line described as follows: 1. Beginning at the Riverside-San Diego County boundary and running north along the range line common to Range 4 East and Range 3 East, San Bernardino Base and Meridian; 2. then east along the Township line common to Township 8 South and Township 7 South; 3. then north along the range line common to Range 5 East and Range 4 East; 4. then west along the Township line common to Township 6 South and Township 7 South to the southwest corner of Section 34, Township 6 South, Range 4 East;				

California—Ozone (1-Hour Standard)[4]

Designated area	Designation		Classification	
	Date [1]	Type	Date [1]	Type
5. then north along the west boundaries of Sections 34, 27, 22, 15, 10, and 3, Township 6 South, Range 4 East; 6. then west along the Township line common to Township 5 South and Township 6 South; 7. then north along the range line common to Range 4 East and Range 3 East; 8. then west along the south boundaries of Sections 13, 14, 15, 16, 17, and 18, Township 5 South, Range 3 East; 9. then north along the range line common to Range 2 East and Range 3 East to the Riverside-San Bernardino County line and that portion of Riverside County which lies to the west of a line described as follows: That segment of the southwestern boundary line of Hydrologic Unit Number 18100100 within Riverside County, further described as follows: 10. Beginning at the Riverside-Imperial County boundary and running north along the range line common to Range 17 East and Range 16 East, San Bernardino Base and Meridian; 11. then northwest along the ridge line of the Chuckwalla Mountains, through Township 8 South, Range 16 East and Township 7 South, Range 16 East, until the Black Butte Mountain, elevation 4504 feet; 12. then west and northwest along the ridge line to the southwest corner of Township 5 South, Range 14 East; 13. then north along the range line common to Range 14 East and Range 13 East; 14. then west and northwest along the ridge line to Monument Mountain, elevation 4834 feet; 15. then southwest and then northwest along the ridge line of the Little San Bernardino Mountains to Quail Mountain, elevation 5814 feet; 16. then northwest along the ridge line to the Riverside-San Bernardino County line				
San Bernadino County (part)—that portion of San Bernardino County which lies north and east of a line described as follows: 1. Beginning at the San Bernardino—Riverside County boundary and running north along the range line common to Range 3 East and Range 2 East, San Bernardino Base and Meridian; 2. then west along the Township line common to Township 3 North and Township 2 North to the San Bernardino—Los Angeles County boundary; and that portion of San Bernardino County which lies south and west of a line described as follows: 3. latitude 35 degrees, 10 minutes north and longitude 115 degrees, 45 minutes west.	11/15/90	Nonattainment	11/15/90	Severe-17.
Ventura County Area:				
Ventura County	11/15/90	Nonattainment	11/15/90	Severe-15.

California—Ozone (1-Hour Standard)[4]

Designated area	Designation		Classification	
	Date [1]	Type	Date [1]	Type
Yuba City Area:				
Sutter County (part—northern portion)	([3])	Nonattainment	([3])	Sec. 185A Area.2.
North of a line connecting the northern border of Yolo County to the SW tip of Yuba County and continuing along the southern Yuba County border to Placer County.				
Yuba County	([3])	Nonattainment	([3])	Sec. 185A Area.2.
Great Basin Valleys Air Basin		Unclassifiable/Attainment		
Alpine County				
Inyo County				
Mono County				
Lake County Air Basin		Unclassifiable/Attainment		
Lake County				
Lake Tahoe Air Basin		Unclassifiable/Attainment		
El Dorado County (part)				
Lake Tahoe Area: As described under 40 CFR 81.275.				
Placer County (part)				
Lake Tahoe Area: As described under 40 CFR 81.275.				
Mountain Counties Air Basin (Remainder of):				
Amador County	11/15/90	Unclassifiable/Attainment	11/15/90	
Calaveras County	11/15/90	Unclassifiable/Attainment	11/15/90	
Mariposa County		Unclassifiable/Attainment		
Nevada County		Unclassifiable/Attainment		
Plumas County		Unclassifiable/Attainment		
Sierra County		Unclassifiable/Attainment		
Tuolumne County		Unclassifiable/Attainment		
North Coast Air Basin		Unclassifiable/Attainment		
Del Norte County				
Humboldt County				
Mendocino County				
Sonoma County (part)				
Remainder of County				
Trinity County				
Northeast Plateau Air Basin		Unclassifiable/Attainment		
Lassen County				
Modoc County				
Siskiyou Couny				
Sacramento Valley Air Basin (Remainder of):				
Colusa County		Unclassifiable/Attainment		
Glenn County		Unclassifiable/Attainment		
Shasta County		Unclassifiable/Attainment		
Tehama County		Unclassifiable/Attainment		
South Central Coast Air Basin (Remainder of):				
Channel Islands		Unclassifiable/Attainment		
San Luis Obispo County		Unclassifiable/Attainment		
Southeast Desert NON-AQMA:				
Riverside County (part)				
Remainder of county		Unclassifiable/Attainment		
San Bernadino County (part)				
Remainder of county		Unclassifiable/Attainment		

[1] This date is October 18, 2000 unless otherwise noted.
[2] An area designated as an ozone nonattainment area as of the date of enactment of the CAAA of the 1990 that did not violate the ozone NAAQS during the period of 1987–1989.
[3] This date is January 16, 2001.
[4] The 1-hour ozone standard is revoked effective June 15, 2005 for all areas in California. The Monterey Bay, San Diego, and Santa Barbara-Santa Maria-Lompoc areas are maintenance areas for the 1-hour NAAQS for purposes of 40 CFR part 51 subpart X.

California—PM–10

Designated Area	Designation		Classification	
	Date	Type	Date	Type
Inyo County.				
Coso Junction planning area	October 4, 2010	Attainment		

California—PM–10

Designated Area	Designation		Classification	
	Date	Type	Date	Type
That portion of Inyo County contained within Hydrologic Unit #18090205.				
Owens Valley planning area ..... Hydrologic Unit #18090103	11/15/90	Nonattainment	02/08/93	Serious
Sacramento County	1/20/94	Nonattainment	1/20/94	Moderate
San Bernardino County:.				
San Bernardino (part):.				
Excluding that portion located in the Trona planning area and excluding that portion located in the South Coast Air Basin.	1/20/94	Nonattainment	1/20/94	Moderate.
Trona planning area: That portion of San Bernardino County contained within Hydrologic Unit #18090285.	9/5/02	Nonattainment	9/5/02	Moderate
Mono County				
Mammoth Lake planning area	11/15/90	Nonattainment	11/15/90	Moderate
Includes the following sections:				
a. Sections 1–12, 17, and 18 of Township T4S, R28E;				
b. Sections 25–36 of Township T3S, R28E;				
c. Sections 25–36 of Township T3S, R27E;				
d. Sections 1–18 of Township T4S, R27E; and				
e. Sections 25 and 36 of Township T3S, R26E				
Mono Basin.				
Hydrologic Unit 1809010	12/29/93	Nonattainment	12/29/93	Moderate
Fresno, Kern, Kings, Madera, Merced, San Joaquin, Stanislaus, Tulare Counties:				
Indian Wells Valley planning area: That portion of Kern County contained within Hydrologic Unit #18090205.	6/6/03	Attainment		

California—PM–10

Designated Area	Designation		Classification	
	Date	Type	Date	Type
San Joaquin Valley Air Basin; Fresno County, Kings County, Madera County, Merced County, San Joaquin County, Stanislaus County, Tulare County, and that portion of Kern County which lies west and north of a line described as follows: Beginning at the Kern-Los Angeles County boundary and running north and east along the northwest boundary of the Rancho La Libre Land Grant to the point of intersection with the range line common to R. 16 W. and R. 17 W., San Bernardino Base and Meridian; north along the range line to the point of intersection with the Rancho El Tejon Land Grant boundary; then southeast, northeast, and northwest along the boundary of the Rancho El Tejon Land Grant to the northwest corner of S. 3, T. 11 N., R. 17 W.; then west 1.2 miles; then north to the Rancho El Tejon Land Grant boundary; then northwest along the Rancho El Tejon line to the southeast corner of S. 34, T. 32 S., R. 30 E., Mount Diablo Base and Meridian; then north to the northwest corner of S. 35, T. 31 S., R. 30 E.; then northeast along the boundary of the Rancho El Tejon Land Grant to the southwest corner of S. 18, T. 31 S., R. 31 E.; then east to the southeast corner of S. 13, T. 31 S., R. 31 E.; then north along the range line common to R. 31 E. and R. 32 E., Mount Diablo Base and Meridian, to the northwest corner of S. 6, T. 29 S., R. 32 E.; then east to the southwest corner of S. 31, T. 28 S., R. 32 E.; then north along the range line common to R. 31 E. and R. 32 E. to the northwest corner of S. 6, T. 28 S., R. 32 E., then west to the southeast corner of S. 36, T. 27 S., R. 31 E., then north along the range line common to R. 31 E. and R. 32 E. to the Kern-Tulare County boundary.	12/12/08	Attainment		
East Kern: That portion of Kern County which lies between the following two lines (with the exception of that portion in Hydrologic Unit Number 18090205—the Indian Wells Valley):	11/15/90	Nonattainment	02/08/93	Serious.

California—PM–10

Designated Area	Designation		Classification	
	Date	Type	Date	Type
(1) West and north of a line described as follows: Beginning at the southwest corner of section 31, T. 10 N 16 W and running east to the northwest boundary of the Rancho La Liebre Land Grant; then running north and east along the northwest boundary of the Rancho La Liebre Land Grant to the point of intersection with the range line common to R. 15 W. and R. 16 W., San Bernardino Base and Meridian; then north along the range line to the northwest corner of section 2, T. 32 S., R. 32 E., Mount Diablo Base and Meridian; then east along the township line common to T. 32 S. and T. 31 S.; then north along the range line common to R. 35 E. and R. 34 E.; then east along the township line common to T. 29 S. and T. 28 S.; then north along the range line common to R. 36 E. and R. 35 E.; then east along the township line common to T. 28 S. and T. 27 S.; then north along the range line common to R. 37 E. and R. 36 E. to the Kern-Tulare County boundary.				

California—PM–10

Designated Area	Designation		Classification	
	Date	Type	Date	Type
(2) East and south of a line of a line described as follows: Beginning at the southwest corner of section 31, T. 10 N 16 W and running north along the range line common to R. 16 W. and R. 17 W., San Bernardino Base and Meridian; north along the range line to the point of intersection with the Rancho El Tejon Land Grant boundary; then southeast, northeast, and northwest along the boundary of the Rancho El Tejon Land Grant to the northwest corner of S. 3, T. 11 N., R. 17 W.; then west 1.2 miles; then north to the Rancho El Tejon Land Grant boundary; then northwest along the Rancho El Tejon line to the southeast corner of S. 34, T. 32 S., R. 30 E., Mount Diablo Base and Meridian; then north to the northwest corner of S. 35, T. 31 S., R. 30 E.; then northeast along the boundary of the Rancho El Tejon Land Grant to the southwest corner of S. 18, T. 31 S., R. 31 E.; then east to the southeast corner of S. 13, T. 31 S., R. 31 E.; then north along the range line common to R. 31 E. and R. 32 E., Mount Diablo Base and Meridian, to the northwest corner of S. 6, T. 29 S., R. 32 E.; then east to the southwest corner of S. 31, T. 28 S., R. 32 E.; then north along the range line common to R. 31 E. and R. 32 E. to the northwest corner of S. 6, T. 28 S., R. 32 E., then west to the southeast corner of S. 36, T. 27 S., R. 31 E., then north along the range line common to R. 31 E. and R. 32 E. to the Kern-Tulare County boundary.				
Riverside, Los Angeles, Orange, and San Bernardino Counties				
South Coast Air Basin	11/15/90	Nonattainment	02/08/93	Serious.
Riverside County				
Coachella Valley planning area	11/15/90	Nonattainment	02/08/93	Serious.
Imperial County				
Imperial Valley planning area	11/15/90	Nonattainment	9/10/04	Serious.
Rest of State	11/15/90	Unclassifiable		

California—NO_2 (1971 Annual Standard)

Designated area	Does not meet primary standards	Cannot be classified or better than national standards
North Coast Air Basin		X
San Francisco Area Air Basin		X
Lake County Air Basin		X
North Central Coast Air Basin:		
Monterey portion		X
San Benito portion		X
Santa Cruz portion		X

California—NO_2 (1971 Annual Standard)

Designated area	Does not meet primary standards	Cannot be classified or better than national standards
South Central Coast Air Basin:		
San Luis Obispo Count		X
Santa Barbara AQMA		X
Santa Barbara non-AQMA		X
Ventura County		X
Channel Islands		X
San Diego Air Basin:		
West San Diego County		X
East San Diego County		X
South Coast Air Basin		X
San Joaquin Valley Air Basin:		
Fresno County		X
Kern County (SJVAS portion)		X
Kings County		X
Madera County		X
Merced County		X
San Joaquin County		X
Stanislaus County		X
Tulare County		X
Sacramento Valley Air Basin:		
Sacramento County		X
Solano County (Sacramento Valley Air Basin portion)		X
Yolo County		X
Butte County		X
Colusa County		X
Glenn County		X
Shasta County (Sacramento Valley portion)		X
Sutter County		X
Tehama County		X
Yuba County		X
Great Basin Valleys Air Basin		X
Northeast Plateau Air Basin		X
Mountain Counties Air Basin:		
AQMA portion of Placer Co. County		X
Placer County excluding AQMA portion and Lake Tahoe portion		X
Anador County		X
Calaveras County		X
El Dorado County, excluding Lake Tahoe Air Basin portion		X
Mariposa County		X
Nevada County		X
Plumas County		X
Sierra County		X
Tuolumne County		X
Southeast Desert Air Basin County:		
Kern County (S.E. Desert portion) County		X
Imperial County		X
Los Angeles County (portion within S.E. Desert Air Basin)		X
Riverside County (portion not within South Coast Air Basin or Coachella Valley planning area)		X
San Bernardino County (portion within S.E. Desert AQMA)		X
Riverside County (Coachella Valley planning area)		X
San Bernardino, non-AQMA		X
Tahoe Air Basin		X

California—NO_2 (2010 1-Hour Standard)

Designated area	Designation [a]	
	Date [1]	Type
Amador County APCD:		
Amador County		Unclassifiable/Attainment.
Antelope Valley AQMD:		
Los Angeles County (part)		Unclassifiable/Attainment.

California—NO_2 (2010 1-Hour Standard)

Designated area	Designation [a]	
	Date [1]	Type
That portion of Los Angeles County which lies north and east of a line described as follows: Beginning at the Los Angeles-San Bernardino County boundary and running west along the township line common to T. 3 N and T. 2 N, San Bernardino Base and Meridian; then north along the range line common to R. 8 W and R. 9 W; then west along the township line common to T. 4 N and T. 3 N; then north along the range Line Common to R. 12 W and R. 13 W to the southeast corner of Section 12, T. 5 N, R. 13 W; then west along the south boundaries of Sections 12, 11, 10, 9, 8, 7, T. 5 N, R. 13 W to the boundary of the Angeles National Forest which is collinear with the range line common to R. 13 W and R. 14 W; then north and west along the Angeles National Forest boundary to the point of intersection with the township line common to T. 7 N and T. 6 N (point is at the northwest corner of Section 4 in T. 6 N, R. 14 W); then west along the township line common to T. 7 N and T. 6 N; then north along the range line common to R. 15 W and R. 16 W to the southeast corner of Section 13, T. 7 N, R. 16 W; then along the south boundaries of Sections 13, 14, 15, 16, 17, 18, T. 7 N, R. 16 W; then north along the range line common to R. 16 W and R. 17 W to the north boundary of the Angeles National Forest (collinear with township line common to T. 8 N and T. 7 N) then west and north along the Angeles National Forest boundary to the point of intersection with the south boundary of the Rancho La Liebre Land Grant; then west and north along this land grant boundary to the Los Angeles-Kern County boundary.		
Bay Area AQMD:		
Alameda County	.....	Unclassifiable/Attainment.
Contra Costa County	.....	Unclassifiable/Attainment.
Marin County	.....	Unclassifiable/Attainment.
Napa County	.....	Unclassifiable/Attainment.
San Francisco County	.....	Unclassifiable/Attainment.
San Mateo County	.....	Unclassifiable/Attainment.
Santa Clara County	.....	Unclassifiable/Attainment.
Solano County (part)	.....	Unclassifiable/Attainment.
That portion of Solano County which lies south and west of a line described as follows: Beginning at the intersection of the westerly boundary of Solano County and the ¼ section line running east and west through the center of Section 34, T. 6 N, R. 2.W, Mount Diablo Base and Meridian, thence east along said ¼ section line to the east boundary of Section 36, T. 6 N, R. 2 W, thence south ½ mile and east 2.0 miles, more or less, along the west and south boundary of Los Putos Rancho to the northwest corner of Section 4, T. 5 N, R. 1 W, thence east along a line common to T. 5 N and T. 6 N to the northeast corner of Section 3, T. 5 N, R. 1 E, thence south along section lines to the southeast corner of Section 10, T. 3 N, R. 1 E, thence east along section lines to the south ¼ corner of Section 8, T. 3 N, R. 2 E, thence east to the boundary between Solano and Sacramento Counties.		
Sonoma County (part)	.....	Unclassifiable/Attainment.

California—NO_2 (2010 1-Hour Standard)

Designated area	Designation [a]	
	Date [1]	Type
That portion of Sonoma County which lies south and east of a line described as follows: Beginning at the southeasterly corner of the Rancho Estero Americano, being on the boundary line between Marin and Sonoma Counties, California; thence running northerly along the easterly boundary line of said Rancho Estero Americano to the northeasterly corner thereof, being an angle corner in the westerly boundary line of Rancho Canada de Jonive; thence running along said boundary of Rancho Canada de Jonive westerly, northerly and easterly to its intersection with the easterly line of Graton Road; thence running along the easterly and southerly line of Graton Road, northerly and easterly to its intersection with the easterly line of Sullivan Road; thence running northerly along said easterly line of Sullivan Road to the southerly line of Green Valley Road; thence running easterly along the said southerly line of Green Valley Road and easterly along the southerly line of State Highway 116, to the westerly line of Vine Hill Road; thence running along the westerly and northerly line of Vine Hill Road, northerly and easterly to its intersection with the westerly line of Laguna Road; thence running northerly along the westerly line of Laguna Road and the northerly projection thereof to the northerly line of Trenton Road; thence running westerly along the northerly line of said Trenton Road to the easterly line of Trenton-Healdsburg Road; thence running northerly along said easterly line of Trenton-Healdsburg Road to the easterly line of Eastside Road; thence running northerly along said easterly line of Eastside Road to its intersection with the southerly line of Rancho Sotoyome; thence running easterly along said southerly line of Rancho Sotoyome to its intersection with the Township line common to Townships 8 and 9 North, Mount Diablo Meridian; thence running easterly along said township line to its intersection with the boundary line between Sonoma and Napa Counties.		
Butte County AQMD:		
Butte County	.....	Unclassifiable/Attainment.
Calaveras County AQMD:		
Calaveras County	.....	Unclassifiable/Attainment.
Colusa County AQMD:		
Colusa County	.....	Unclassifiable/Attainment.
Eastern Kern APCD:		
Kern County (part)	.....	Unclassifiable/Attainment.

California—NO_2 (2010 1-Hour Standard)

Designated area	Designation [a]	
	Date [1]	Type
That portion of Kern County east and south of a line described as follows: Beginning at the Kern-Los Angeles County boundary and running north and east along the northwest boundary of the Rancho La Libre Land Grant to the point of intersection with the range line common to R. 16 W and R. 17 W, San Bernardino Base and Meridian; north along the range line to the point of intersection with the Rancho El Tejon Land Grant boundary; then southeast, northeast, and northwest along the boundary of the Rancho El Tejon Land Grant to the northwest corner of Section 3, T. 11 N, R. 17 W; then west 1.2 miles; then north to the Rancho El Tejon Land Grant boundary; then northwest along the Rancho El Tejon line to the southeast corner of Section 34, T. 32 S, R. 30 E, Mount Diablo Base and Meridian; then north to the northwest corner of Section 35, T. 31 S, R. 30 E; then northeast along the boundary of the Rancho El Tejon Land Grant to the southwest corner of Section 18, T. 31 S, R. 31 E; then east to the southeast corner of Section 13, T. 31 S, R. 31 E; then north along the range line common to R. 31 E and R. 32 E, Mount Diablo Base and Meridian, to the northwest corner of Section 6, T. 29 S, R. 32 E; then east to the southwest corner of Section 31 T. 28 S, R. 32 E; then north along the range line common to R. 31 E and R. 32 E to the northwest corner of Section 6, T. 28 S, R. 32 E, then west to the southeast corner of Section 36, T. 27 S, R. 31 E, then north along the range line common to R. 31 E and R. 32 E to the Kern-Tulare County boundary.		
El Dorado County AQMD:		
El Dorado County		Unclassifiable/Attainment.
Feather River AQMD:		
Sutter County		Unclassifiable/Attainment.
Yuba County		Unclassifiable/Attainment.
Glenn County APCD:		
Glenn County		Unclassifiable/Attainment.
Great Basin Unified APCD:		
Alpine County		Unclassifiable/Attainment.
Inyo County		Unclassifiable/Attainment.
Mono County		Unclassifiable/Attainment.
Imperial County APCD:		
Imperial County		Unclassifiable/Attainment.
Lake County AQMD:		
Lake County		Unclassifiable/Attainment.
Lassen County APCD:		
Lassen County		Unclassifiable/Attainment.
Mariposa County APCD:		
Mariposa County		Unclassifiable/Attainment.
Mendocino County AQMD:		
Mendocino County		Unclassifiable/Attainment.
Modoc County APCD:		
Modoc County		Unclassifiable/Attainment.
Mojave Desert AQMD:		
Riverside County (part)		Unclassifiable/Attainment.

California—NO_2 (2010 1-Hour Standard)

Designated area	Designation [a]	
	Date [1]	Type
That portion of Riverside County which lies east of a line described as follows: Beginning at the southwest corner of Section 32, T. 8 S, R. 20 E, San Bernardino Base and Meridian, on the Riverside-Imperial County Boundary; then northerly along section lines to the northwest corner of Section 5, T. 7 S, R. 20 E; then westerly along the township line to the southwest corner of Section 31, T. 6 S, R. 19 E; then northerly along the range line to the northwest corner of Section 6, T. 5 S, R. 19 E; then easterly along the township line to the southwest corner of Section 33, T. 4 S, R. 19 E; then northerly along section lines to the northwest corner of Section 4, T. 4 S, R. 19 E; then westerly along the township lines to the southwest corner of Section 32, T. 3 S, R. 19 E; then northerly along section lines to the northwest corner of Section 17, T. 3 S, R. 19 E; then westerly along the township line to the southwest corner of Section 7, T. 3 S, R. 19 E; then northerly along section lines to the northwest corner of Section 30, T. 2 S, R. 19 E; then westerly along the southerly line of Section 24, T. 2 S, R. 18 E, to the southwest corner thereof; then northerly along section lines to the northwest corner of Section 13, T. 2 S, R. 18 E; then westerly along section lines to the southwest corner of Section 10, T. 2 S, R. 18 E; then northerly along section lines to the Riverside-San Bernardino County boundary.		
San Bernardino County (part)	.....	Unclassifiable/Attainment.
That portion of San Bernardino County east and north of a line described as follows: Beginning at the San Bernardino-Riverside County boundary and running north along the range line common to R. 3 E and R. 2 E, San Bernardino Base and Meridian; then west along the township line common to T. 3 N and T. 2 N to the San Bernardino-Los Angeles County boundary.		
Monterey Bay Unified APCD:		
Monterey County	.....	Unclassifiable/Attainment.
San Benito County	.....	Unclassifiable/Attainment.
Santa Cruz County	.....	Unclassifiable/Attainment.
North Coast Unified AQMD:		
Del Norte County	.....	Unclassifiable/Attainment.
Humboldt Count	.....	Unclassifiable/Attainment.
Trinity County	.....	Unclassifiable/Attainment.
Northern Sierra AQMD:		
Nevada County	.....	Unclassifiable/Attainment.
Plumas County	.....	Unclassifiable/Attainment.
Sierra County	.....	Unclassifiable/Attainment.
Northern Sonoma County APCD:		
Sonoma County (part)	.....	Unclassifiable/Attainment.

California—NO_2 (2010 1-Hour Standard)

Designated area	Designation [a]	
	Date [1]	Type
That portion of Sonoma County which lies north and west of a line described as follows: Beginning at the southeasterly corner of the Rancho Estero Americano, being on the boundary line between Marin and Sonoma Counties, California; thence running northerly along the easterly boundary line of said Rancho Estero Americano to the northeasterly corner thereof, being an angle corner in the westerly boundary line of Rancho Canada de Jonive; thence running along said boundary of Rancho Canada de Jonive westerly, northerly and easterly to its intersection with the easterly line of Graton Road; thence running along the easterly and southerly line of Graton Road, northerly and easterly to its intersection with the easterly line of Sullivan Road; thence running northerly along said easterly line of Sullivan Road to the southerly line of Green Valley Road; thence running easterly along the said southerly line of Green Valley Road and easterly along the southerly line of State Highway 116, to the westerly line of Vine Hill Road; thence running along the westerly and northerly line of Vine Hill Road, northerly and easterly to its intersection with the westerly line of Laguna Road; thence running northerly along the westerly line of Laguna Road and the northerly projection thereof to the northerly line of Trenton Road; thence running westerly along the northerly line of said Trenton Road to the easterly line of Trenton-Healdsburg Road; thence running northerly along said easterly line of Trenton-Healdsburg Road to the easterly line of Eastside Road; thence running northerly along said easterly line of Eastside Road to its intersection with the southerly line of Rancho Sotoyome; thence running easterly along said southerly line of Rancho Sotoyome to its intersection with the Township line common to Townships 8 and 9 North, Mount Diablo Meridian; thence running easterly along said township line to its intersection with the boundary line between Sonoma and Napa Counties.		
Placer County APCD:		
Placer County	.....	Unclassifiable/Attainment.
Sacramento Metropolitan AQMD:		
Sacramento County	.....	Unclassifiable/Attainment.
San Diego County APCD:		
San Diego County	.....	Unclassifiable/Attainment.
San Joaquin Valley Unified APCD:		
Fresno County	.....	Unclassifiable/Attainment.
Kern County (part)	.....	Unclassifiable/Attainment.

California—NO_2 (2010 1-Hour Standard)

Designated area	Designation [a]	
	Date [1]	Type
That portion of Kern County which lies west and north of a line described as follows: Beginning at the Kern-Los Angeles County boundary and running north and east along the northwest boundary of the Rancho La Libre Land Grant to the point of intersection with the range line common to R. 16 W and R. 17 W, San Bernardino Base and Meridian; north along the range line to the point of intersection with the Rancho El Tejon Land Grant boundary; then southeast, northeast, and northwest along the boundary of the Rancho El Tejon Land Grant to the northwest corner of Section 3, T. 11 N, R. 17 W; then west 1.2 miles; then north to the Rancho El Tejon Land Grant boundary; then northwest along the Rancho El Tejon line to the southeast corner of Section 34, T. 32 S, R. 30 E, Mount Diablo Base and Meridian; then north to the northwest corner of Section 35, T. 31 S, R. 30 E; then northeast along the boundary of the Rancho El Tejon Land Grant to the southwest corner of Section 18, T. 31 S, R. 31 E; then east to the southeast corner of Section 13, T. 31 S, R. 31 E; then north along the range line common to R. 31 E and R. 32 E, Mount Diablo Base and Meridian, to the northwest corner of Section 6, T. 29 S, R. 32 E; then east to the southwest corner of Section 31, T. 28 S, R. 32 E; then north along the range line common to R. 31 E and R. 32 E to the northwest corner of Section 6, T. 28 S, R. 32 E, then west to the southeast corner of Section 36, T. 27 S, R. 31 E, then north along the range line common to R. 31 E and R. 32 E to the Kern-Tulare County boundary.		
Kings County		Unclassifiable/Attainment.
Madera County		Unclassifiable/Attainment.
Merced County		Unclassifiable/Attainment.
San Joaquin County		Unclassifiable/Attainment.
Stanislaus County		Unclassifiable/Attainment.
Tulare County		Unclassifiable/Attainment.
San Luis Obispo County APCD:		
San Luis Obispo County		Unclassifiable/Attainment.
Santa Barbara County APCD:		
Santa Barbara County		Unclassifiable/Attainment.
Shasta County AQMD:		
Shasta County		Unclassifiable/Attainment.
Siskiyou County APCD:		
Siskiyou County		Unclassifiable/Attainment.
South Coast AQMD:		
Los Angeles County (part)		Unclassifiable/Attainment.

California—NO_2 (2010 1-Hour Standard)

Designated area	Designation [a]	
	Date [1]	Type
That portion of Los Angeles County which lies south and west of a line described as follows: Beginning at the Los Angeles-San Bernardino County boundary and running west along the township line common to T.3 N and T.2 N, San Bernardino Base and Meridian; then north along the range line common to R.8 W and R.9 W; then west along the township line common to T.4 N and T.3 N; then north along the range line common to R.12 W and R.13 W to the southeast corner of Section 12, T.5 N, R. 13 W; then west along the south boundaries of Sections 12, 11, 10, 9, 8, 7, T.5 N, R. 13 W to the boundary of the Angeles National Forest which is collinear with the range line common to R. 13 W and R. 14 W; then north and west along the Angeles National Forest boundary to the point of intersection with the township line common to T.7 N and T. 6 N (point is at the northwest corner of Section 4 in T.6 N, R. 14 W); then west along the township line common to T.7 N and T.6 N; then north along the range line common to R. 15 W and R. 16 W to the southeast corner of Section 13, T.7 N, R. 16 W; then along the south boundaries of Sections 13, 14, 15, 16, 17, 18, T.7 N, R. 16 W; then north along the range line common to R.16 W and R. 17 W to the north boundary of the Angeles National Forest (collinear with township line common to T.8 N and T.7 N); then west and north along the Angeles National Forest boundary to the point of intersection with the south boundary of the Rancho La Liebre Land Grant; then west and north along this land grant boundary to the Los Angeles-Kern County boundary.		
Orange County	.....	Unclassifiable/Attainment.
Riverside County (part)	.....	Unclassifiable/Attainment.
That portion of Riverside County which lies west of a line described as follows: Beginning at the southwest corner of Section 32, T. 8 S, R. 20 E, San Bernardino Base and Meridian, on the Riverside-Imperial County Boundary; then northerly along section lines to the northwest corner of Section 5, T. 7 S, R. 20 E; then westerly along the township line to the southwest corner of Section 31, T. 6 S, R. 19 E; then northerly along the range line to the northwest corner of Section 6, T. 5 S, R. 19 E; then easterly along the township line to the southwest corner of Section 33, T. 4 S, R. 19 E; then northerly along section lines to the northwest corner of Section 4, T. 4 S, R. 19 E; then westerly along the township lines to the southwest corner of Section 32, T. 3 S, R. 19 E; then northerly along section lines to the northwest corner of Section 17, T. 3 S, R. 19 E; then westerly along the township line to the southwest corner of Section 7, T. 3 S, R. 19 E; then northerly along section lines to the northwest corner of Section 30, T. 2 S, R. 19 E; then westerly along the southerly line of Section 24, T. 2 S, R. 18 E, to the southwest corner thereof; then northerly along section lines to the northwest corner of Section 13, T. 2 S, R. 18 E; then westerly along section lines to the southwest corner of Section 10, T. 2 S, R. 18 E; then northerly along section lines to the Riverside-San Bernardino County boundary.		
San Bernardino County (part)	.....	Unclassifiable/Attainment.

California—NO_2 (2010 1-Hour Standard)

Designated area	Designation [a]	
	Date [1]	Type
That portion of San Bernardino County west and south of a line described as follows: Beginning at the San Bernardino-Riverside County boundary and running north along the range line common to R. 3 E and R. 2 E; then west along the township line common to T. 3 N and T. 2 N to the San Bernardino-Los Angeles County boundary.		
Tehama County APCD:		
Tehama County	.....	Unclassifiable/Attainment.
Tuolumne County APCD:		
Tuolumne County	.....	Unclassifiable/Attainment.
Ventura County APCD:		
Ventura County	.....	Unclassifiable/Attainment.
Yolo-Solano AQMD:		
Solano County	.....	Unclassifiable/Attainment.
That portion of Solano County which lies north and east of a line described as follows: Beginning at the intersection of the westerly boundary of Solano County and the ¼ section line running east and west through the center of Section 34, T. 6 N, R. 2 W, Mount Diablo Base and Meridian, thence east along said ¼ section line to the east boundary of Section 36, T. 6 N, R. 2 W, thence south ½ mile and east 2.0 miles, more or less, along the west and south boundary of Los Putos Rancho to the northwest corner of Section 4, T. 5 N, R. 1 W, thence east along a line common to T. 5 N and T. 6 N to the northeast corner of Section 3, T. 5 N, R. 1 E, thence south along section lines to the southeast corner of Section 10, T. 3 N, R. 1 E, thence east along section lines to the south ¼ corner of Section 8, T. 3 N, R. 2 E, thence east to the boundary between Solano and Sacramento Counties.		
Yolo County	.....	Unclassifiable/Attainment.

[a] Includes Indian Country located in each county or area, except as otherwise specified.
[1] This date is 90 days after October 31, 2011, unless otherwise noted.

California—Ozone (8-Hour Standard)

Designated area	Designation [a]		Category/classification	
	Date [1]	Type	Date [1]	Type
Amador and Calaveras Cos., CA: (Central Mountain Cos.)				
Amador County	.....	Nonattainment	6/13/12	Subpart 2/Moderate.
Calaveras County	.....	Nonattainment	6/13/12	Subpart 2/Moderate.
Chico, CA:				
Butte County	.....	Nonattainment	6/13/12	Subpart 2/Marginal.
Kern County (Eastern Kern), CA	.....	Nonattainment	6/13/12	Subpart 2/Moderate.
Kern County (part)				

California—Ozone (8-Hour Standard)

Designated area	Designation [a]		Category/classification	
	Date [1]	Type	Date [1]	Type
That portion of Kern County (with the exception of that portion in Hydrologic Unit Number 18090205—the Indian Wells Valley) east and south of a line described as follows: Beginning at the Kern-Los Angeles County boundary and running north and east along the northwest boundary of the Rancho La Liebre Land Grant to the point of intersection with the range line common to Range 16 West and Range 17 West, San Bernardino Base and Meridian; north along the range line to the point of intersection with the Rancho El Tejon Land Grant boundary; then southeast, northeast, and northwest along the boundary of the Rancho El Tejon Grant to the northwest corner of Section 3, Township 11 North, Range 17 West; then west 1.2 miles; then north to the Rancho El Tejon Land Grant boundary; then northwest along the Rancho El Tejon line to the southeast corner of Section 34, Township 32 South, Range 30 East, Mount Diablo Base and Meridian; then north to the northwest corner of Section 35, Township 31 South, Range 30 East; then northeast along the boundary of the Rancho El Tejon Land Grant to the southwest corner of Section 18, Township 31 South, Range 31 East; then east to the southeast corner of Section 13, Township 31 South, Range 31 East; then north along the range line common to Range 31 East and Range 32 East, Mount Diablo Base and Meridian, to the northwest corner of Section 6, Township 29 South, Range 32 East; then east to the southwest corner of Section 31, Township 28 South, Range 32 East; then north along the range line common to Range 31 East and Range 32 East to the northwest corner of Section 6, Township 28 South, Range 32 East, then west to the southeast corner of Section 36, Township 27 South, Range 31 East, then north along the range line common to Range 31 East and Range 32 East to the Kern-Tulare County boundary.				
Imperial County, CA: Imperial County	.....	Nonattainment	3/14/08	Subpart 2/Moderate.
Los Angeles—South Coast Air Basin, CA:	.....	Nonattainment	([2])	Subpart 2/Extreme.
Los Angeles County (part)	.....	Nonattainment	([2])	Subpart 2/Extreme.

California—Ozone (8-Hour Standard)

Designated area	Designation [a]		Category/classification	
	Date [1]	Type	Date [1]	Type
That portion of Los Angeles County which lies south and west of a line described as follows: Beginning at the Los Angeles-San Bernardino County boundary and running west along the Township line common to Township 3 North and Township 2 North, San Bernardino Base and Meridian; then north along the range line common to Range 8 West and Range 9 West; then west along the Township line common to Township 4 North and Township 3 North; then north along the range line common to Range 12 West and Range 13 West to the southeast corner of Section 12, Township 5 North and Range 13 West; then west along the south boundaries of Sections 12, 11, 10, 9, 8, and 7, Township 5 North and Range 13 West to the boundary of the Angeles National Forest which is collinear with the range line common to Range 13 West and Range 14 West; then north and west along the Angeles National Forest boundary to the point of intersection with the Township line common to Township 7 North and Township 6 North (point is at the northwest corner of Section 4 in Township 6 North and Range 14 West); then west along the Township line common to Township 7 North and Township 6 North; then north along the range line common to Range 15 West and Range 16 West to the southeast corner of Section 13, Township 7 North and Range 16 West; then along the south boundaries of Sections 13, 14, 15, 16, 17, and 18, Township 7 North and Range 16 West; then north along the range line common to Range 16 West and Range 17 West to the north boundary of the Angeles National Forest (collinear with the Township line common to Township 8 North and Township 7 North); then west and north along the Angeles National Forest boundary to the point of intersection with the south boundary of the Rancho La Liebre Land Grant; then west and north along this land grant boundary to the Los Angeles-Kern County boundary.				
Orange County	.....	Nonattainment	(2)	Subpart 2/Extreme.
Riverside County (part)	.....	Nonattainment	(2)	Subpart 2/Extreme.

California—Ozone (8-Hour Standard)

Designated area	Designation [a]		Category/classification	
	Date [1]	Type	Date [1]	Type
That portion of Riverside County, except that portion of the area defined below that lies within the Morongo Reservation or the Pechanga Reservation [c], which lies to the west of a line described as follows: Beginning at the Riverside-San Diego County boundary and running north along the range line common to Range 4 East and Range 3 East, San Bernardino Base and Meridian; then east along the Township line common to Township 8 South and Township 7 South; then north along the range line common to Range 5 East and Range 4 East; then west along the Township line common to Township 6 South and Township 7 South to the southwest corner of Section 34, Township 6 South, Range 4 East; then north along the west boundaries of Sections 34, 27, 22, 15, 10, and 3, Township 6 South, Range 4 East; then west along the Township line common to Township 5 South and Township 6 South; then north along the range line common to Range 4 East and Range 3 East; then west along the south boundaries of Sections 13, 14, 15, 16, 17, and 18, Township 5 South, Range 3 East; then north along the range line common to Range 2 East and Range 3 East; to the Riverside-San Bernardino County line.				
Morongo Reservation [c]	.....	Nonattainment	([2])	Subpart 2/Severe-17.
Pechanga Reservation [c]	.....	Nonattainment	([2])	Subpart 2/Severe-17.
San Bernardino County (part)	.....	Nonattainment	([2])	Subpart 2/Extreme.
That portion of San Bernardino County which lies south and west of a line described as follows: Beginning at the San Bernardino-Riverside County boundary and running north along the range line common to Range 3 East and Range 2 East, San Bernardino Base and Meridian; then west along the Township line common to Township 3 North and Township 2 North to the San Bernardino-Los Angeles County boundary.				
Los Angeles and San Bernardino Counties (Western Mojave Desert), CA.	.....	Nonattainment	6/7/2012	Subpart 2/Severe-15.
Los Angeles County (part)	.....	Nonattainment	6/7/2012	Subpart 2/Severe-15.

California—Ozone (8-Hour Standard)

Designated area	Designation [a]		Category/classification	
	Date [1]	Type	Date [1]	Type
That portion of Los Angeles County which lies north and east of a line described as follows: Beginning at the Los Angeles-San Bernardino County boundary and running west along the Township line common to Township 3 North and Township 2 North, San Bernardino Base and Meridian; then north along the range line common to Range 8 West and Range 9 West; then west along the Township line common to Township 4 North and Township 3 North; then north along the range line common to Range 12 West and Range 13 West to the southeast corner of Section 12, Township 5 North and Range 13 West; then west along the south boundaries of Sections 12, 11, 10, 9, 8, and 7, Township 5 North and Range 13 West to the boundary of the Angeles National Forest which is collinear with the range line common to Range 13 West and Range 14 West; then north and west along the Angeles National Forest boundary to the point of intersection with the Township line common to Township 7 North and Township 6 North (point is at the northwest corner of Section 4 in Township 6 North and Range 14 West); then west along the Township line common to Township 7 North and Township 6 North; then north along the range line common to Range 15 West and Range 16 West to the southeast corner of Section 13, Township 7 North and Range 16 West; then along the south boundaries of Sections 13, 14, 15, 16, 17, and 18, Township 7 North and Range 16 West; then north along the range line common to Range 16 West and Range 17 West to the north boundary of the Angeles National Forest (collinear with the Township line common to Township 8 North and Township 7 North); then west and north along the Angeles National Forest boundary to the point of intersection with the south boundary of the Rancho La Liebre Land Grant; then west and north along this land grant boundary to the Los Angeles-Kern County boundary.				
San Bernardino County (part)	.....	Nonattainment	6/7/2012	Subpart 2/Severe-15.
That portion of San Bernardino County which lies north and east of a line described as follows: Beginning at the San Bernardino-Riverside County boundary and running north along the range line common to Range 3 East and Range 2 East, San Bernardino Base and Meridian; then west along the Township line common to Township 3 North and Township 2 North to the San Bernardino-Los Angeles County boundary; And that portion of San Bernardino County which lies south and west of a line described as follows: latitude 35 degrees, 10 minutes north and longitude 115 degrees, 45 minutes west..				
Mariposa and Tuolumne Cos., CA: (Southern Mountain Counties)				

California—Ozone (8-Hour Standard)

Designated area	Designation [a]		Category/classification	
	Date [1]	Type	Date [1]	Type
Mariposa County	.....	Nonattainment	6/13/12	Subpart 2/Moderate.
Tuolumne County	.....	Nonattainment	6/13/12	Subpart 2/Moderate.
Riverside Co. (Coachella Valley), CA	.....	Nonattainment	([2])	Subpart 2/Severe-15.
Riverside County (part)	.....	Nonattainment	([2])	Subpart 2/Severe-15.
That portion of Riverside County which lies to the east of a line described as follows: Beginning at the Riverside-San Diego County boundary and running north along the range line common to Range 4 East and Range 3 East, San Bernardino Base and Meridian; then east along the Township line common to Township 8 South and Township 7 South; then north along the range line common to Range 5 East and Range 4 East; then west along the Township line common to Township 6 South and Township 7 South to the southwest corner of Section 34, Township 6 South, Range 4 East; then north along the west boundaries of Sections 34, 27, 22, 15, 10, and 3, Township 6 South, Range 4 East; then west along the Township line common to Township 5 South and Township 6 South; then north along the range line common to Range 4 East and Range 3 East; then west along the south boundaries of Sections 13, 14, 15, 16, 17, and 18, Township 5 South, Range 3 East; then north along the range line common to Range 2 East and Range 3 East; to the Riverside-San Bernardino County line. And that portion of Riverside County which lies to the west of a line described as follows:				

California—Ozone (8-Hour Standard)

Designated area	Designation [a]		Category/classification	
	Date [1]	Type	Date [1]	Type
That segment of the southwestern boundary line of Hydrologic Unit Number 18100100 within Riverside County, further described as follows: Beginning at the Riverside-Imperial County boundary and running north along the range line common to Range 17 East and Range 16 East, San Bernardino Base and Meridian; then northwest along the ridge line of the Chuckwalla Mountains, through Township 8 South, Range 16 East and Township 7 South, Range 16 East, until the Black Butte Mountain, elevation 4504′; then west and northwest along the ridge line to the southwest corner of Township 5 South, Range 14 East; then north along the range line common to Range 14 East and Range 13 East; then west and northwest along the ridge line to Monument Mountain, elevation 4834′; then southwest and then northwest along the ridge line of the Little San Bernardino Mountains to Quail Mountain, elev. 5814′; then northwest along the ridge line to the Riverside-San Bernardino County line.				
Sacramento Metro, CA	.....	Nonattainment	(2)	Subpart 2/Severe-15.
El Dorado County (part)	.....	Nonattainment	(2)	Subpart 2/Severe-15.
All portions of the county, except that portion of El Dorado County within the drainage area naturally tributary to Lake Tahoe including said Lake.				
Placer County (part)	.....	Nonattainment	(2)	Subpart 2/Severe-15.

California—Ozone (8-Hour Standard)

Designated area	Designation [a]		Category/classification	
	Date [1]	Type	Date [1]	Type
All portions of the county except that portion of Placer County within the drainage area naturally tributary to Lake Tahoe including said Lake, plus that area in the vicinity of the head of the Truckee River described as follows: Commencing at the point common to the aforementioned drainage area crestline and the line common to Townships 15 North and 16 North, Mount Diablo Base and Meridian, and following that line in a westerly direction to the northwest corner of Section 3, Township 15 North, Range 16 East, Mount Diablo Base and Meridian, thence south along the west line of Sections 3 and 10, Township 15 North, Range 16 East, Mount Diablo Base and Meridian, to the intersection with the said drainage area crestline, thence following the said drainage area boundary in a southeasterly, then northeasterly direction to and along the Lake Tahoe Dam, thence following the said drainage area crestline in a northeasterly, then northwesterly direction to the point of beginning.				
Sacramento County	.....	Nonattainment	([2])	Subpart 2/Severe-15.
Solano County (part)	.....	Nonattainment	([2])	Subpart 2/Severe-15.
That portion of Solano County which lies north and east of a line described as follows: Beginning at the intersection of the westerly boundary of Solano County and the ¼ section line running east and west through the center of Section 34; Township 6 North, Range 2 West, Mount Diablo Base and Meridian, thence east along said ¼ section line to the east boundary of Section 36, Township 6 North, Range 2 West, thence south ½ mile and east 2.0 miles, more or less, along the west and south boundary of Los Putos Rancho to the northwest corner of Section 4, Township 5 North, Range 1 West, thence east along a line common to Township 5 North and Township 6 North to the northeast corner of Section 3, Township 5 North, Range 1 East, thence south along section lines to the southeast corner of Section 10, Township 3 North, Range 1 East, thence east along section lines to the south ¼ corner of Section 8, Township 3 North, Range 2 East, thence east to the boundary between Solano and Sacramento Counties.				

California—Ozone (8-Hour Standard)

Designated area	Designation [a]		Category/classification	
	Date [1]	Type	Date [1]	Type
Sutter County (part)		Nonattainment	([2])	Subpart 2/Severe-15.
Portion south of a line connecting the northern border of Yolo County to the SW tip of Yuba County and continuing along the southern Yuba County border to Placer County.				
Yolo County		Nonattainment	([2])	Subpart 2/Severe-15.
San Diego, CA		Nonattainment	6/13/12	Subpart 2/Moderate.
San Diego County (part)				
That portion of San Diego County that excludes the areas listed below: La Posta Areas #1 and #2 [b], Cuyapaipe Area [b], Manzanita Area [b], Campo Areas #1 and #2.[b]				
San Diego County (part)				
La Posta Areas #1 and #2 [b]		Unclassifiable/Attainment		
Cuyapaipe Area [b]		Unclassifiable/Attainment		
Manzanita Area [b]		Unclassifiable/Attainment		
Campo Areas #1 and #2 [b]		Unclassifiable/Attainment		
San Francisco Bay Area, CA		Nonattainment		Subpart 2/Marginal.
Alameda County		Nonattainment		Subpart 2/Marginal.
Contra Costa County		Nonattainment		Subpart 2/Marginal.
Marin County		Nonattainment		Subpart 2/Marginal.
Napa County		Nonattainment		Subpart 2/Marginal.
San Francisco County		Nonattainment		Subpart 2/Marginal.
San Mateo County		Nonattainment		Subpart 2/Marginal.
Santa Clara County		Nonattainment		Subpart 2/Marginal.
Solano County (part)		Nonattainment		Subpart 2/Marginal.
Portion of Solano County which lies south and west of a line described as follows: Beginning at the intersection of the westerly boundary of Solano County and the ¼ section line running east and west through the center of Section 34, T6N, R2W, M.D.B. & M., thence east along said ¼ section line to the east boundary of Section 36, T6N, R2W, thence south ½ mile and east 2.0 miles, more or less, along the west and south boundary of Los Putos Rancho to the northwest corner of Section 4, T5N, R1W, thence east along a line common to T5N and T6N to the northeast corner of Section 3, T5N, R1E, thence south along section lines to the southeast corner of Section 10, T3N, R1E, thence east along section lines to the south ¼ corner of Section 8, T3N, R2E, thence east to the boundary between Solano and Sacramento Counties.				
Sonoma County (part)		Nonattainment		Subpart 2/Marginal.

California—Ozone (8-Hour Standard)

Designated area	Designation [a]		Category/classification	
	Date [1]	Type	Date [1]	Type
That portion of Sonoma County which lies south and east of a line described as follows: Beginning at the southeasterly corner of the Rancho Estero Americano, being on the boundary line between Marin and Sonoma Counties, California; thence running northerly along the easterly boundary line of said Rancho Estero Americano to the northeasterly corner thereof, being an angle corner in the westerly boundary line of Rancho Canada de Jonive; thence running along said boundary of Rancho Canada de Jonive westerly, northerly and easterly to its intersection with the easterly line of Graton Road; thence running along the easterly and southerly line of Graton Road, northerly and easterly to its intersection with the easterly line of Sullivan Road; thence running northerly along said easterly line of Sullivan Road to the southerly line of Green Valley Road; thence running easterly along the said southerly line of Green Valley Road and easterly along the southerly line of State Highway 116, to the westerly line of Vine Hill Road; thence running along the westerly and northerly line of Vine Hill Road, northerly and easterly to its intersection with the westerly line of Laguna Road; thence running northerly along the westerly line of Laguna Road and the northerly projection thereof to the northerly line of Trenton Road; thence running westerly along the northerly line of said Trenton Road to the easterly line of Trenton-Healdsburg Road; thence running northerly along said easterly line of Trenton-Healdsburg Road to the easterly line of Eastside Road; thence running northerly along said easterly line of Eastside Road to its intersection with the southerly line of Rancho Sotoyome; thence running easterly along said southerly line of Rancho Sotoyome to its intersection with the Township line common to Townships 8 and 9 North, M.D.M.; thence running easterly along said township line to its intersection with the boundary line between Sonoma and Napa Counties.				
San Joaquin Valley, CA	.....	Nonattainment	(2)	Subpart 2/Extreme.
Fresno County	.....	Nonattainment	(2)	Subpart 2/Extreme.

California—Ozone (8-Hour Standard)

Designated area	Designation [a]		Category/classification	
	Date [1]	Type	Date [1]	Type
Kern County (part)	.....	Nonattainment	([2])	Subpart 2/Extreme.
That portion of Kern County which lies west and north of a line described as follows: Beginning at the Kern-Los Angeles County boundary and running north and east along the northwest boundary of the Rancho La Libre Land Grant to the point of intersection with the range line common to R. 16 W. and R. 17 W., San Bernardino Base and Meridian; north along the range line to the point of intersection with the Rancho El Tejon Land Grant boundary; then southeast, northeast, and northwest along the boundary of the Rancho El Tejon Land Grant to the northwest corner of S. 3, T. 11 N., R. 17 W.; then west 1.2 miles; then north to the Rancho El Tejon Land Grant boundary; then northwest along the Rancho El Tejon line to the southeast corner of S. 34, T. 32 S., R. 30 E., Mount Diablo Base and Meridian; then north to the northwest corner of S. 35, T. 31 S., R. 30 E.; then northeast along the boundary of the Rancho El Tejon Land Grant to the southwest corner of S. 18, T. 31 S., R. 31 E.; then east to the southeast corner of S. 13, T. 31 S., R. 31 E.; then north along the range line common to R. 31 E. and R. 32 E., Mount Diablo Base and Meridian, to the northwest corner of S. 6, T. 29 S., R. 32 E.; then east to the southwest corner of S. 31, T. 28 S., R. 32 E.; then north along the range line common to R. 31 E. and R. 32 E. to the northwest corner of S. 6, T. 28 S., R. 32 E., then west to the southeast corner of S. 36, T. 27 S., R. 31 E., then north along the range line common to R. 31 E. and R. 32 E. to the Kern-Tulare County boundary.				
Kings County	.....	Nonattainment	([2])	Subpart 2/Extreme.
Madera County	.....	Nonattainment	([2])	Subpart 2/Extreme.
Merced County	.....	Nonattainment	([2])	Subpart 2/Extreme.
San Joaquin County	.....	Nonattainment	([2])	Subpart 2/Extreme.
Stanislaus County	.....	Nonattainment	([2])	Subpart 2/Extreme.
Tulare County	.....	Nonattainment	([2])	Subpart 2/Extreme.
Sutter County (part), CA:	.....	Nonattainment	6/13/12	Subpart 2/Original.
Sutter County (part).				

California—Ozone (8-Hour Standard)

Designated area	Designation [a]		Category/classification	
	Date [1]	Type	Date [1]	Type
(Sutter Buttes) That portion of the Sutter Buttes mountain range at or above 2,000 feet in elevation.				
Remainder of County	.....	Unclassifiable/Attainment		
Ventura County, CA:				
Ventura County (part)—That part of Ventura County excluding the Channel Islands of Anacapa and San Nicolas Islands..	.....	Nonattainment	6/19/08	Subpart 2/Serious.
Remainder of County	.....	Unclassifiable/Attainment		
Nevada County (Western part), CA	.....	Nonattainment	6/13/12	Subpart 2/Moderate.
Nevada County (part)				
That portion of Nevada County, which lies west of a line, described as follows: beginning at the Nevada-Placer County boundary and running north along the western boundaries of Sections 24, 13, 12, 1, Township 17 North, Range 14 East, Mount Diablo Base and Meridian, and Sections 36, 25, 24, 13, 12, Township 18 North, Range 14 East to the Nevada-Sierra County boundary.				
Santa Barbara-Santa Maria-Lompoc, CA:				
Santa Barbara County	.....	Unclassifiable/Attainment		
Mohave Desert Air Basin:				
Riverside County (part) remainder	.....	Unclassifiable/Attainment		
San Bernardino County (part) remainder	.....	Unclassifiable/Attainment		
Great Basin Valleys Air Basin	.....	Unclassifiable/Attainment		
Alpine County				
Inyo County				
Mono County				
Lake County Air Basin	.....	Unclassifiable/Attainment		
Lake County				
Lake Tahoe Air Basin	.....	Unclassifiable/Attainment		
El Dorado County (part)				
Lake Tahoe Area: As described under 40 CFR 81.275.				
Placer County (part)				
Lake Tahoe Area: As described under 40 CFR 81.275.				
Monterey Bay Area	.....	Unclassifiable/Attainment		
Monterey County				
San Benito County				
Santa Cruz County				
Mountain Counties Air Basin (remainder of):				
Nevada County (part) remainder	.....	Unclassifiable/Attainment		
Plumas County	.....	Unclassifiable/Attainment		
Sierra County	.....	Unclassifiable/Attainment		
North Coast Air Basin	.....	Unclassifiable/Attainment		
Del Norte County				
Humboldt County				
Mendocino County				
Sonoma County (part) remainder				
Trinity County				
Northeast Plateau Air Basin	.....	Unclassifiable/Attainment		
Lassen County				
Modoc County				
Siskiyou County				
Sacramento Valley Air Basin (remainder of):				
Colusa County	.....	Unclassifiable/Attainment		
Glenn County	.....	Unclassifiable/Attainment		
Shasta County	.....	Unclassifiable/Attainment		
Tehama County	.....	Unclassifiable/Attainment		
Yuba County	.....	Unclassifiable/Attainment		
South Central Coast Air Basin: (remainder of)				
Channel Islands	.....	Unclassifiable/Attainment		
San Luis Obispo County	.....	Unclassifiable/Attainment		

[a] Includes Indian Country located in each county or area, except as otherwise specified.

[b] The boundaries for these designated areas are based on coordinates of latitude and longitude derived from EPA Region 9's GIS database and are illustrated in a map entitled ''Eastern San Diego County Attainment Areas for the 8-Hour Ozone NAAQS,'' dated March 9, 2004, including an attached set of coordinates. The map and attached set of coordinates are available at EPA's Region 9 Air Division office. The designated areas roughly approximate the boundaries of the reservations for these tribes, but their inclusion in this table is intended for CAA planning purposes only and is not intended to be a federal determination of the exact boundaries of the reservations. Also, the specific listing of these tribes in this table does not confer, deny, or withdraw Federal recognition of any of the tribes so listed nor any of the tribes not listed.

[c] The use of reservation boundaries for this designation is for purposes of CAA planning only and is not intended to be a federal determination of the exact boundaries of the reservations. Nor does the specific listing of the Tribes in this table confer, deny, or withdraw Federal recognition of any of the Tribes listed or not listed.

[1] This date is June 15, 2004, unless otherwise noted.

[2] This date is June 4, 2010.

California—$PM_{2.5}$ (Annual NAAQS)

Designated area	Designation [a]	
	Date [1]	Type
Los Angeles-South Coast Air Basin, CA:		
Los Angeles County (part)	.....	Nonattainment.
That portion of Los Angeles County which lies south and west of a line described as follows: Beginning at the Los Angeles-San Bernardino County boundary and running west along the Township line common to Township 3 North and Township 2 North, San Bernardino Base and Meridian; then north along the range line common to Range 8 West and Range 9 West; then west along the Township line common to Township 4 North and Township 3 North; then north along the range line common to Range 12 West and Range 13 West to the southeast corner of Section 12, Township 5 North and Range 13 West; then west along the south boundaries of Sections 12, 11, 10, 9, 8, and 7, Township 5 North and Range 13 West to the boundary of the Angeles National Forest which is collinear with the range line common to Range 13 West and Range 14 West; then north and west along the Angeles National Forest boundary to the point of intersection with the Township line common to Township 7 North and Township 6 North (point is at the northwest corner of Section 4 in Township 6 North and Range 14 West); then west along the Township line common to Township 7 North and Township 6 North; then north along the range line common to Range 15 West and Range 16 West to the southeast corner of Section 13, Township 7 North and Range 16 West; then along the south boundaries of Sections 13, 14, 15, 16, 17, and 18, Township 7 North and Range 16 West; then north along the range line common to Range 16 West and Range 17 West to the north boundary of the Angeles National Forest (collinear with the Township line common to Township 8 North and Township 7 North); then west and north along the Angeles National Forest boundary to the point of intersection with the south boundary of the Rancho La Liebre Land Grant; then west and north along this land grant boundary to the Los Angeles-Kern County boundary.		
Orange County	.....	Nonattainment.
Riverside County (part)	.....	Nonattainment.
That portion of Riverside County which lies to the west of a line described as follows: Beginning at the Riverside-San Diego County boundary and running north along the range line common to Range 4 East and Range 3 East, San Bernardino Base and Meridian; then east along the Township line common to Township 8 South and Township 7 South; then north along the range line common to Range 5 East and Range 4 East; then west along the Township line common to Township 6 South and Township 7 South to the southwest corner of Section 34, Township 6 South, Range 4 East; then north along the west boundaries of Sections 34, 27, 22, 15, 10, and 3, Township 6 South, Range 4 East; then west along the Township line common to Township 5 South and Township 6 South; then north along the range line common to Range 4 East and Range 3 East; then west along the south boundaries of Sections 13, 14, 15, 16, 17, and 18, Township 5 South, Range 3 East; then north along the range line common to Range 2 East and Range 3 East; to the Riverside-San Bernardino County line.		
San Bernardino County (part)	.....	Nonattainment.
That portion of San Bernardino County which lies south and west of a line described as follows: Beginning at the San Bernardino-Riverside County boundary and running north along the range line common to Range 3 East and Range 2 East, San Bernardino Base and Meridian; then west along the Township line common to Township 3 North and Township 2 North to the San Bernardino-Los Angeles County boundary.		
San Diego, CA:		
San Diego County	.....	Unclassifiable/Attainment.
San Joaquin Valley, CA:		
Fresno County	.....	Nonattainment.
Kern County (part)	.....	Nonattainment.

California—$PM_{2.5}$ (Annual NAAQS)

Designated area	Designation [a]	
	Date [1]	Type
That portion of Kern County which lies west and north of a line described as follows: Beginning at the Kern-Los Angeles County boundary and running north and east along the northwest boundary of the Rancho La Libre Land Grant to the point of intersection with the range line common to R. 16 W. and R. 17 W., San Bernardino Base and Meridian; north along the range line to the point of intersection with the Rancho El Tejon Land Grant boundary; then southeast, northeast, and northwest along the boundary of the Rancho El Tejon Land Grant to the northwest corner of S. 3, T. 11 N., R. 17 W.; then west 1.2 miles; then north to the Rancho El Tejon Land Grant boundary; then northwest along the Rancho El Tejon line to the southeast corner of S. 34, T. 32 S., R. 30 E., Mount Diablo Base and Meridian; then north to the northwest corner of S. 35, T. 31 S., R. 30 E.; then northeast along the boundary of the Rancho El Tejon Land Grant to the southwest corner of S. 18, T. 31 S., R. 31 E.; then east to the southeast corner of S. 13, T. 31 S., R. 31 E.; then north along the range line common to R. 31 E. and R. 32 E., Mount Diablo Base and Meridian, to the northwest corner of S. 6, T. 29 S., R. 32 E.; then east to the southwest corner of S. 31, T. 28 S., R. 32 E.; then north along the range line common to R. 31 E. and R. 32 E. to the northwest corner of S. 6, T. 28 S., R. 32 E., then west to the southeast corner of S. 36, T. 27 S., R. 31 E., then north along the range line common to R. 31 E. and R. 32 E. to the Kern-Tulare County boundary.		
Kings County	.....	Nonattainment.
Madera County	.....	Nonattainment.
Merced County	.....	Nonattainment.
San Joaquin County	.....	Nonattainment.
Stanislaus County	.....	Nonattainment.
Tulare County	.....	Nonattainment.
North Coast Air Basin:		
Del Norte County	.....	Unclassifiable/Attainment.
Humboldt County	.....	Unclassifiable/Attainment.
Mendocino County	.....	Unclassifiable/Attainment.
Sonoma County (part)	.....	Unclassifiable/Attainment.
That portion of Sonoma county which lies north and west of a line described as follows: Beginning at the south-easterly corner of the Rancho Estero Americano, being on the boundary line between Marin and Sonoma Counties, California; thence running northerly along the easterly boundary line of said Rancho Estero Americano to the northeasterly corner thereof, being an angle corner in the westerly boundary line of Rancho Canada de Jonive, thence running along said boundary of Rancho Canada de Jonive westerly; northerly and easterly to its intersection with the easterly line of Graton Road; thence running along the easterly and southerly line of Graton Road northerly and easterly to its intersection with the easterly line of Sullivan Road; thence running northerly along said easterly line of Sullivan Road to the southerly line of Green Valley Road; thence running easterly along the said southerly line of Green Valley Road and easterly along the southerly line of State Highway 116, to the westerly and northerly line of Vine Hill Road; thence running along the westerly and northerly line of Vine Hill Road, northerly and easterly to its intersection with the westerly line of Laguna Road; thence running northerly along the westerly line of Laguna Road and the northerly projection thereof to the northerly line of Trenton Road; thence running westerly along the northerly line of said Trenton Road to the easterly line of Trenton-Healdsburg Road to the easterly line of Eastside Road: thence running northerly along said easterly line of Eastside Road to its intersection with the southerly line of Rancho Sotoyome; thence running easterly along said southerly line of Rancho Sotoyome to its intersection with the Township line common to Townships 8 and 9 north, Mt. Diablo Base and Meridian; thence running easterly along said Township line to its intersection with the boundary line between Sonoma and Napa Counties, State of California.		
Trinity County	3/7/11	Unclassifiable/Attainment.
Northeast Plateau Air Basin:		
Lassen County	3/7/11	Unclassifiable/Attainment.
Modoc County	3/7/11	Unclassifiable/ Attainment.

California—$PM_{2.5}$ (Annual NAAQS)

Designated area	Designation [a]	
	Date [1]	Type
Siskiyou County	3/7/11	Unclassifiable/Attainment.
Lake County Air Basin:		
Lake County		Unclassifiable/Attainment.
Upper Sacramento Valley Region:		
Butte County (remainder)	3/7/11	Unclassifiable/Attainment.
Colusa County		Unclassifiable/Attainment.
Glenn County		Unclassifiable/Attainment.
Shasta County	3/7/11	Unclassifiable/Attainment.
Sutter County (part)		Unclassifiable/Attainment.
Tehama County	3/7/11	Unclassifiable/Attainment.
Yuba County (remainder)	3/7/11	Unclassifiable/Attainment.
Sacramento Metropolitan Region:		
El Dorado County (part)		Unclassifiable/Attainment.
All portions of the county except that portion of El Dorado County within the drainage area naturally tributary to Lake Tahoe including said Lake.		
Placer County (part)		Unclassifiable/Attainment.
All portions of the county except that portion of Placer County within the drainage area naturally tributary to Lake Tahoe including said Lake, plus that area in the vicinity of the head of the Truckee River described as follows: Commencing at the point common to the aforementioned drainage area crestline and the line common to Townships 15 North and 16 North, Mount Diablo Base and Meridian, and following that line in a westerly direction to the northwest corner of Section 3, Township 15 North, Range 16 East, Mount Diablo Base and Meridian, thence south along the west line of Sections 3 and 10, Township 15 North, Range 16 East, Mount Diablo Base and Meridian, to the intersection with the said drainage area crestline, thence following the said drainage area boundary in a southeasterly, then northeasterly direction to and along the Lake Tahoe Dam, thence following the said drainage area crestline in a northeasterly, then northwesterly direction to the point of beginning.		
Sacramento County		Unclassifiable/Attainment.
Solano County (part)		Unclassifiable/Attainment.
That portion of Solano County which lies north and east of a line described as follows: Beginning at the intersection of the westerly boundary of Solano County and the 1/4 section line running east and west through the center of Section 34; Township 6 North, Range 2 West, Mount Diablo Base and Meridian, thence east along said 1/4 section line to the east boundary of Section 36, Township 6 North, Range 2 West, thence south 1/2 mile and east 2.0 miles, more or less, along the west and south boundary of Los Putos Rancho to the northwest corner of Section 4, Township 5 North, Range 1 West, thence east along a line common to Township 5 North and Township 6 North to the northeast corner of Section 3, Township 5 North, Range 1 East, thence south along section lines to the southeast corner of Section 10, Township 3 North, Range 1 East, thence east along section lines to the south 1/4 corner of Section 8, Township 3 North, Range 2 East, thence east to the boundary between Solano and Sacramento Counties.		
Sutter County (part)		Unclassifiable/Attainmant
That portion south of a line connecting the northern border of Yolo County to the southwest tip of Yuba County and continuing along the southern Yuba County border to Placer County.		
Yolo County		Unclassifiable/Attainment.
Northern Mountain Counties:		
Nevada County		Unclassifiable/Attainment.

California—$PM_{2.5}$ (Annual NAAQS)

Designated area	Designation [a]	
	Date [1]	Type
Plumas County	3/7/11	Unclassifiable/ Attainment.
Sierra County	3/7/11	Unclassifiable/ Attainment.
Central Mountain Counties:		
Amador County		Unclassifiable/Attainment.
Calaveras County		Unclassifiable/Attainment.
Southern Mountain Counties:		
Mariposa County		Unclassifiable/Attainment.
Tuolumne County		Unclassifiable/Attainment.
Lake Tahoe Air Basin:		
El Dorado County (part)		Unclassifiable/ Attainmant
That portion of El Dorado County within the drainage area naturally tributary to Lake Tahoe including said Lake.		
Placer County (part):		
That portion of Placer County within the drainage area naturally tributary to Lake Tahoe including said Lake, plus that area in the vicinity of the head of the Truckee River described as follows: commencing at the point common to the aforementioned drainage area crestline and the line common to Townships 15 North and 16 North, Mount Diablo Base and Meridian, and following that line in a westerly direction to the northwest corner of Section 3, Township 15 North, Range 16 East, Mount Diablo Base and Meridian, thence south along the west line of Sections 3 and 10, Township 15 North, Range 16 East, Mount Diablo Base and Meridian, to the intersection with the said drainage area crestline, thence following the said drainage area boundary in a southeasterly, then northeasterly direction to and along the Lake Tahoe Dam, thence following the said drainage area crestline in a northeasterly, then northwesterly direction to the point of beginning..		Unclassifiable/Attainment.
San Francisco Bay Area Air Basin:		
Alameda County		Unclassifiable/Attainment.
Contra Costa County		Unclassifiable/Attainment.
Marin County		Unclassifiable/Attainment.
Napa County		Unclassifiable/Attainment.
San Francisco County		Unclassifiable/Attainment.
San Mateo County		Unclassifiable/Attainment.
Santa Clara County		Unclassifiable/Attainment.
Solano County (part)		Unclassifiable/Attainment.
Portion of Solano County which lies south and west of a line described as follows: Beginning at the intersection of the westerly boundary of Solano County and the ¼ section line running east and west through the center of Section 34, T6N, R2W, M.D.B. & M., thence east along said ¼ section line to the east boundary of Section 36, T6N, R2W, thence south ½ mile and east 2.0 miles, more or less, along the west and south boundary of Los Putos Rancho to the northwest corner of Section 4, T5N, R1W, thence east along a line common to T5N and T6N to the northeast corner of Section 3, T5N, R1E, thence south along section lines to the southeast corner of Section 10, T3N, R1E, thence east along section lines to the south ¼ corner of Section 8, T3N, R2E, thence east to the boundary between Solano and Sacramento Counties.		
Sonoma County (part)		Unclassifiable/Attainment.

California—$PM_{2.5}$ (Annual NAAQS)

Designated area	Designation [a]	
	Date [1]	Type
That portion of Sonoma County which lies south and east of a line described as follows: Beginning at the southeasterly corner of the Rancho Estero Americano, being on the boundary line between Marin and Sonoma Counties, California; thence running northerly along the easterly boundary line of said Rancho Estero Americano to the northeasterly corner thereof, being an angle corner in the westerly boundary line of Rancho Canada de Jonive; thence running along said boundary of Rancho Canada de Jonive westerly, northerly and easterly to its intersection with the easterly line of Graton Road; thence running along the easterly and southerly line of Graton Road, northerly and easterly to its intersection with the easterly line of Sullivan Road; thence running northerly along said easterly line of Sullivan Road to the southerly line of Green Valley Road; thence running easterly along the said southerly line of Green Valley Road and easterly along the southerly line of State Highway 116, to the westerly line of Vine Hill Road; thence running along the westerly and northerly line of Vine Hill Road, northerly and easterly to its intersection with the westerly line of Laguna Road; thence running northerly along the westerly line of Laguna Road and the northerly projection thereof to the northerly line of Trenton Road; thence running westerly along the northerly line of said Trenton Road to the easterly line of Trenton-Healdsburg Road; thence running northerly along said easterly line of Trenton-Healdsburg Road to the easterly line of Eastside Road; thence running northerly along said easterly line of Eastside Road to its intersection with the southerly line of Rancho Sotoyome; thence running easterly along said southerly line of Rancho Sotoyome to its intersection with the Township line common to Townships 8 and 9 North, M.D.M.; thence running easterly along said township line to its intersection with the boundary line between Sonoma and Napa Counties.		
North Central Coast Air Basin:		
Monterey County	.....	Unclassifiable/Attainment.
San Benito County	.....	Unclassifiable/Attainment.
Santa Cruz County	.....	Unclassifiable/Attainment.
San Luis Obispo County:		
San Luis Obispo County	.....	Unclassifiable/Attainment.
Santa Barbara County:		
Santa Barbara County (part)	.....	Unclassifiable/Attainment.
Excluding Channel Islands		
Ventura County:		
Ventura County (part)	.....	Unclassifiable/Attainment.
Excluding Anacapa and San Nicolas Islands.		
Northern Channel Islands:		
Santa Barbara County (part)	.....	Unclassifiable/Attainment.
The islands located in the South Central Coast Air Basin, including San Miguel, Santa Rosa, Santa Cruz, and San Nicolas.		
Ventura County (part)	.....	Unclassifiable/Attainment.
Anacapa and San Nicolas Islands.		
Great Basin Valleys Air Basin:		
Alpine County	.....	Unclassifiable/Attainment.
Inyo County (part)	.....	Unclassifiable/Attainment.
That portion of Inyo County that lies outside Hydrologic Unit Number 18090205.		
Mono County	.....	Unclassifiable/Attainment.
Coso Junction:		
Inyo County (part)	.....	Unclassifiable/Attainment.
That portion of Inyo County that lies inside Hydrologic Unit Number 18090205.		
Eastern Kern County:		
Kern County (part)	.....	Unclassifiable/Attainment.

California—$PM_{2.5}$ (Annual NAAQS)

Designated area	Designation [a]	
	Date [1]	Type
That portion of Kern County (with the exception of that portion in Hydrologic Unit Number 18090205—the Indian Wells Valley) east and south of a line described as follows: Beginning at the Kern—Los Angeles County boundary and running north and east along the northwest boundary of the Rancho La Liebre Land Grant to the point of intersection with the range line common to Range 16 West and Range 17 West, San Bernardino Base and Meridian; north along the range line to the point of intersection with the Rancho El Tejon Land Grant boundary; then southeast, northeast, and northwest along the boundary of the Rancho El Tejon Grant to the northwest corner of Section 3, Township 11 North, Range 17 West; then west 1.2 miles; then north to the Rancho El Tejon Land Grant boundary; then northwest along the Rancho El Tejon line to the southeast corner of Section 34, Township 32 South, Range 30 East, Mount Diablo Base and Meridian; then north to the northwest corner of Section 35, Township 31 South, Range 30 East; then northeast along the boundary of the Rancho El Tejon Land Grant to the southwest corner of Section 18, Township 31 South, Range 31 East; then east to the southeast corner of Section 13, Township 31 South, Range 31 East; then north along the range line common to Range 31 East and Range 32 East, Mount Diablo Base and Meridian, to the northwest corner of Section 6, Township 29 South, Range 32 East; then east to the southwest corner of Section 31, Township 28 South, Range 32 East; then north along the range line common to Range 31 East and Range 32 East to the northwest corner of Section 6, Township 28 South, Range 32 East, then west to the southeast corner of Section 36, Township 27 South, Range 31 East, then north along the range line common to Range 31 East and Range 32 East to the Kern-Tulare County boundary.		
Indian Wells Valley:		
Kern County (part)	.....	Unclassifiable/Attainment.
That portion of Kern County that lies inside Hydrologic Unit Number 18090205.		
Western Mojave Desert and Antelope Valley:		
Los Angeles County (part):		
That portion of Los Angeles County which lies north and east of a line described as follows: Beginning at the Los Angeles—San Bernardino County boundary and running west along the Township line common to Township 3 North and Township 2 North, San Bernardino Base and Meridian; then north along the range line common to Range 8 West and Range 9 West; then west along the Township line common to Township 4 North and Township 3 North; then north along the range line common to Range 12 West and Range 13 West to the southeast corner of Section 12, Township 5 North and Range 13 West; then west along the south boundaries of Sections 12, 11, 10, 9, 8, and 7, Township 5 North and Range 13 West to the boundary of the Angeles National Forest which is collinear with the range line common to Range 13 West and Range 14 West; then north and west along the Angeles National Forest boundary to the point of intersection with the Township line common to Township 7 North and Township 6 North (point is at the northwest corner of Section 4 in Township 6 North and Range 14 West); then west along the Township line common to Township 7 North and Township 6 North; then north along the range line common to Range 15 West and Range 16 West to the southeast corner of Section 13, Township 7 North and Range 16 West; then along the south boundaries of Sections 13, 14, 15, 16, 17, and 18, Township 7 North and Range 16 West; then north along the range line common to Range 16 West and Range 17 West to the north boundary of the Angeles National Forest (collinear with the Township line common to Township 8 North and Township 7 North); then west and north along the Angeles National Forest boundary to the point of intersection with the south boundary of the Rancho La Liebre Land Grant; then west and north along this land grant boundary to the Los Angeles-Kern County boundary..	.....	Unclassifiable/Attainment.
Trona:		
San Bernardino County (part)	.....	Unclassifiable/Attainment.
That portion of San Bernardino County that lies inside Hydrologic Unit Number 18090205.		
Coachella Valley:		
Riverside County (part)	.....	Unclassifiable/Attainment.

California—$PM_{2.5}$ (Annual NAAQS)

Designated area	Designation [a]	
	Date [1]	Type
That portion of Riverside County which lies to the east of a line described as follows: Beginning at the Riverside—San Diego County boundary and running north along the range line common to Range 4 East and Range 3 East, San Bernardino Base and Meridian; then east along the Township line common to Township 8 South and Township 7 South; then north along the range line common to Range 5 East and Range 4 East; then west along the Township line common to Township 6 South and Township 7 South to the southwest corner of Section 34, Township 6 South, Range 4 East; then north along the west boundaries of Sections 34, 27, 22, 15, 10, and 3, Township 6 South, Range 4 East; then west along the Township line common to Township 5 South and Township 6 South; then north along the range line common to Range 4 East and Range 3 East; then west along the south boundaries of Sections 13, 14, 15, 16, 17, and 18, Township 5 South, Range 3 East; then north along the range line common to Range 2 East and Range 3 East;, to the Riverside-San Bernardino County line: And that portion of Riverside County which lies to the west of a line described as follows: That segment of the southwestern boundary line of Hydrologic Unit Number 18100100 within Riverside County, further described as follows: Beginning at the Riverside-Imperial County boundary and running north along the range line common to Range 17 East and Range 16 East, San Bernardino Base and Meridian; then northwest along the ridge line of the Chuckwalla Mountains, through Township 8 South, Range 16 East and Township 7 South, Range 16 East, until the Black Butte Mountain, elevation 4504'; then west and northwest along the ridge line to the southwest corner of Township 5 South, Range 14 East; then north along the range line common to Range 14 East and Range 13 East; then west and northwest along the ridge line to Monument Mountain, elevation 4834'; then southwest and then northwest along the ridge line of the Little San Bernardino Mountains to Quail Mountain, elev. 5814'; then northwest along the ridge line to the Riverside-San Bernardino County line.		
Far Eastern Riverside and San Bernardino Counties:		
San Bernardino County (remainder)	.....	Unclassifiable/Attainment.
Riverside County (remainder)	.....	Unclassifiable/Attainment.
Imperial County:		
Imperial County	.....	Unclassifiable/Attainment.
San Diego, CA:		
San Diego County	.....	Unclassifiable/Attainment.

[a] Includes Indian Country located in each county or area, except as otherwise specified.
[1] This date is 90 days after January 5, 2005, unless otherwise noted.
[b] The boundaries for these designated areas are based on coordinates of latitude and longitude derived from EPA Region 9's GIS database and are illustrated in a map entitled ''Southeastern San Diego County Unclassifiable/Attainment. Areas for the PM–2.5 NAAQS,'' dated December 10, 2004, including an attached set of coordinates. The map and attached set of coordinates are available at EPA's Region 9 Air Division office. The designated areas roughly approximate the boundaries of the reservations for these tribes, but their inclusion in this table is intended for the CAA planning purposes only and is not intended to be a federal determination of the exact boundaries of the reservations. Also, the specific listing of these areas in this table does not confer, deny, or withdraw Federal recognition of any of the tribes so listed nor any of the tribes not listed.

California—$PM_{2.5}$ [24-hour NAAQS]

Designated area	Designation for the 1997 NAAQS [a]		Designation for the 2006 NAAQS [a]	
	Date [1]	Type	Date [2]	Type
Chico, CA:				
Butte County (part)	.....	Unclassifiable/Attainment.	.....	Nonattainment.

California—$PM_{2.5}$ [24-hour NAAQS]

Designated area	Designation for the 1997 NAAQS [a]		Designation for the 2006 NAAQS [a]	
	Date [1]	Type	Date [2]	Type
That portion of Butte County which lies west of the line described as follows: (Mount Diablo Base and Meridian) Beginning at the intersection of the Butte-Yuba county line and the township line common to T18N R6E and T19N R6E, west to the township line common to T18N R6E and T19N R6E, then north along the range line common to R5E and R6E, then west along the township line common to T21N and T20N, then north along the range line common to R4E and R5E, then west along the township line common to T24N and T23N to the Butte-Tehama County boundary.				
Imperial County, CA:				
(part)	.....	Unclassifiable/Attainment.	.....	Nonattainment.
That portion of Imperial County which lies within the line described as follows: (San Bernardino Base and Meridan) Beginning at the intersection of the United States-Mexico border and the southeast corner of T17S R11E, then north along the range line of the eastern edge of range R11E, then east along the township line of the southern edge of T12S to the northeast corner of T13S R15E, then south along the range line common to R15E and R16E, to the United States-Mexico border.				
Los Angeles-South Coast Air Basin, CA:				
Los Angeles County (part)	.....	Nonattainment	.....	Nonattainment.

California—$PM_{2.5}$ [24-hour NAAQS]

Designated area	Designation for the 1997 NAAQS [a]		Designation for the 2006 NAAQS [a]	
	Date [1]	Type	Date [2]	Type
That portion of Los Angeles County which lies south and west of a line described as follows: Beginning at the Los Angeles-San Bernardino County boundary and running west along the Township line common to Township 3 North and Township 2 North, San Bernardino Base and Meridian; then North along the range line common to Range 8 West and Range 9 West; then west along the Township line common to Township 4 North and Township 3 North; then north along the range line common to Range 12 West and Range 13 West to the southeast corner of Section 12, Township 5 North and Range 13 West; then west along the south boundaries of Sections 12, 11, 10, 9, 8, and 7, Township 5 North and Range 13 West to the boundary of the Angeles National Forest which is collinear with the range line common to Range 13 West and Range 14 West; then north and west along the Angeles National Forest boundary to the point of intersection with the Township line common to Township 7 North and Township 6 North (point is at the northwest corner of Section 4 in Township 6 North and Range 14 West); then west along the Township line common to Township 7 North and Township 6 North; then north along the range line common to Range 15 West and Range 16 West to the southeast corner of Section 13, Township 7 North and Range 16 West; then along the south boundaries of Sections 13, 14, 15, 16, 17 and 18, Township 7 North and Range 16 West; then north along the range line common to Range 16 West and Range 17 West to the north boundary of the Angeles National Forest (collinear with the Township line common to Township 8 North and Township 7 North); then west and north along the Angeles National Forest boundary to the point of intersection with the south boundary of the Rancho La Liebre Land Grant; then west and north along this land grant boundary to the Los Angeles-Kern County boundary.				
Orange County	.....	Nonattainment	.....	Nonattainment.
Riverside County (part)	.....	Nonattainment	.....	Nonattainment.

California—$PM_{2.5}$ [24-hour NAAQS]

Designated area	Designation for the 1997 NAAQS [a]		Designation for the 2006 NAAQS [a]	
	Date [1]	Type	Date [2]	Type
That portion of Riverside County which lies to the west of a line described as follows: Beginning at the Riverside-San Diego County boundary and running north along the range line common to Range 4 East and Range 3 East, San Bernardino Base and Meridian; then east along the Township line common to Township 8 South and Township 7 South; then north along the range line common to Range 5 East and Range 4 East; then west along the Township line common to Township 6 South and Township 7 South to the southwest corner of Section 34, Township 6 South, Range 4 East; then north along the west boundaries of Sections 34, 27, 22, 15, 10, and 3, Township 6 South, Range 4 East; then west along the Township line common to Township 5 South and Township 6 South; then north along the range line common to Range 4 East and Range 3 East; then west along the south boundaries of Sections 13, 14, 15, 16, 17, and 18, Township 5 South, Range 3 East; then north along the range line common to Range 2 East and Range 3 East; to the Riverside-San Bernardino County Line (excluding the lands of the Santa Rosa Band of Cahuilla Mission Indians).				
That part of the lands of the Santa Rosa Band of Cahuilla Mission Indians which is excluded from the Riverside County (part) nonattainment area.	.....	Nonattainment	.....	Unclassifiable/Attainment.
San Bernardino County (part)	.....	Nonattainment	.....	Nonattainment.
That portion of San Bernardino County which lies south and west of a line described as follows: Beginning at the San Bernardino-Riverside County boundary and running north along the range line common to Range 3 East and Range 2 East, San Bernardino Base and Meridian; then west along the Township line common to Township 3 North and Township 2 North to the San Bernardino-Los Angeles County boundary.				
Sacramento, CA:				
El Dorado County (part)	.....	Unclassifiable/Attainment.	.....	Nonattainment.

California—$PM_{2.5}$ [24-hour NAAQS]

Designated area	Designation for the 1997 NAAQS [a]		Designation for the 2006 NAAQS [a]	
	Date [1]	Type	Date [2]	Type
That portion of El Dorado County which lies west of the line described as follows: (Mount Diablo Base and Meridian) Beginning at the intersection of El Dorado-Amador county line and the township line common to townships T8N R10E and T8N R11E, then north along the range line common to ranges R10E and R11E, then east along the township line common to T9N and T8N, then north along the range line common to ranges R12E and R13E, then west along the township line common to T12N and T11N, then north along the range line common to ranges R10E and R11E, then west along the township line common to T13N and T12N, then north along the range line common to ranges R9E and R10E, to the El Dorado-Placer County boundary.				
Placer County (part)	.....	Unclassifiable/Attainment.	.....	Nonattainment.
That portion of Placer County which lies west of the line described as follows: (Mount Diablo Base and Meridian) Beginning at the intersection of the Placer-El Dorado County line and the township line common to townships T12N R9E and T13N R9E, then running west along the township line common to townships T12N R9E and T13N R9E, then north along the range line common to ranges R8E and R9E, to the Placer-Nevada County boundary.				
Sacramento County	.....	Unclassifiable/Attainment.	.....	Nonattainment.
Solano County (part)	.....	Unclassifiable/Attainment.	.....	Nonattainment.

California—$PM_{2.5}$ [24-hour NAAQS]

Designated area	Designation for the 1997 NAAQS [a]		Designation for the 2006 NAAQS [a]	
	Date [1]	Type	Date [2]	Type
That portion of Solano County which lies north and east of a line described as follows: beginning at the intersection of the westerly boundary of Solano County and the ¼ section line running east and west through the center of Section 34; Township 6 North, Range 2 West, Mount Diablo Base and Meridian, thence east along said ¼ section line to the east boundary of Section 36, Township 6 North, Range 2 West, thence south ½ mile and east 2.0 miles, more or less, along the west and south boundary of Los Putos Rancho to the northwest corner of Section 4, Township 5 North, Range 1 West, thence east along a line common to Township 5 North and Township 6 North to the northeast corner of Section 3, Township 5 North, Range 1 East, thence south along section lines to the southeast corner of Section 10, Township 3 North, Range 1 East, thence east along section lines to the south ¼ corner of Section 8, Township 3 North, Range 2 East, thence east to the boundary between Solano and Sacramento Counties.				
Yolo County (part)	.....	Unclassifiable/Attainment.	.....	Nonattainment.
That portion of Yolo County which lies east of the line described as follows: (Mount Diablo Base and Meridian) Beginning at the intersection of Yolo-Solano County boundary and the range line of the eastern edge of township T8N R2W, north along the range line of the eastern edge of township T8N R2W, continuing north along the range line common to ranges R2W and R1W, to the Yolo-Colusa County boundary.				
San Francisco Bay Area, CA:				
Alameda County	.....	Unclassifiable/Attainment.	.....	Nonattainment.
Contra Costa County	.....	Unclassifiable/Attainment.	.....	Nonattainment.
Marin County	.....	Unclassifiable/Attainment.	.....	Nonattainment.
Napa County	.....	Unclassifiable/Attainment.	.....	Nonattainment.
San Francisco County	.....	Unclassifiable/Attainment.	.....	Nonattainment.
San Mateo County	.....	Unclassifiable/Attainment.	.....	Nonattainment.
Santa Clara County	.....	Unclassifiable/Attainment.	.....	Nonattainment.
Solano County (part)	.....	Unclassifiable/Attainment.	.....	Nonattainment.

California—$PM_{2.5}$ [24-hour NAAQS]

Designated area	Designation for the 1997 NAAQS [a]		Designation for the 2006 NAAQS [a]	
	Date [1]	Type	Date [2]	Type
That portion of Solano County which lies south and west of a line described as follows: Beginning at the intersection of the westerly boundary of Solano County and the ¼ section line running east and west through the center of Section 34, Township 6 North, Range 2 West, Mount Diablo Base and Meridian, thence east along said ¼ section line to the east boundary of Section 36, Township 6 North, Range 2 West, thence south ½ mile and east 2.0 miles, more or less, along the west and south boundary of Los Putos Rancho to the northwest corner of Section 4, Township 5 North, Range 1 West thence east along a line common to T5N and T6N to the northeast corner of Section 3, T5N, R1E, thence south along section lines to the southeast corner of Section 10, T3N, R1E, thence east along section lines to the south ¼ corner of Section 8, T3N, R2E, thence east to the boundary between Solano and Sacramento Counties.				
Sonoma County (part)	.....	Unclassifiable/Attainment.	.....	Nonattainment.

California—$PM_{2.5}$ [24-hour NAAQS]

Designated area	Designation for the 1997 NAAQS [a]		Designation for the 2006 NAAQS [a]	
	Date [1]	Type	Date [2]	Type
That portion of Sonoma County which lies south and east of a line described as follows: Beginning at the southeasterly corner of the Rancho Estero Americano, being on the boundary line between Marin and Sonoma Counties, California; thence running northerly along the easterly boundary line of said Rancho Estero Americano to the northeasterly corner thereof, being an angle corner in the westerly boundary line of Rancho Canada de Jonive; thence running along said boundary of Rancho Canada de Jonive westerly, northerly and easterly to its intersection with the easterly line of Graton Road; thence running along the easterly and southerly line of Graton Road, northerly and easterly to its intersection with the easterly line of Sullivan Road; thence running northerly along said easterly line of Sullivan Road to the southerly line of Green Valley Road; thence running easterly along the said southerly line of Green Valley Road and easterly along the southerly line of State Highway 116, to the westerly line of Vine Hill Road; thence running along the westerly and northerly line of Vine Hill Road, northerly and easterly to its intersection with the westerly line of Laguna Road; thence running northerly along the westerly line of Laguna Road and the northerly projection thereof to the northerly line of Trenton Road; thence running westerly along the northerly line of said Trenton Road to the easterly line of Trenton-Healdsburg Road; thence running northerly along said easterly line of Trenton-Healdsburg Road to the easterly line of Eastside Road; thence running northerly along said easterly line of Eastside Road to its intersection with the southerly line of Rancho Sotoyome; thence running easterly along said southerly line of Rancho Sotoyome to its intersection with the Township line common to Townships 8 and 9 North, M.D.M.; thence running easterly along said township line to its intersection with the boundary line between Sonoma and Napa Counties.				
San Joaquin Valley, CA:				
Fresno County	.....	Nonattainment	.....	Nonattainment.
Kern County (part)	.....	Nonattainment	.....	Nonattainment.

California—$PM_{2.5}$ [24-hour NAAQS]

Designated area	Designation for the 1997 NAAQS [a]		Designation for the 2006 NAAQS [a]	
	Date [1]	Type	Date [2]	Type
That portion of Kern County which lies west and north of a line described as follows: Beginning at the Kern-Los Angeles County boundary and running north and east along the northwest boundary of the Rancho La Liebre Land Grant to the point of intersection with the range line common to R. 16 W. and R. 17 W., San Bernardino Base and Meridian; north along the range line to the point of intersection with the Rancho El Tejon Land Grant boundary; then southeast, northeast, and northwest along the boundary of the Rancho El Tejon Land Grant to the northwest corner of Sec. 3, T11N, R17W; then west 1.2 miles; then north to the Rancho El Tejon Land Grant boundary; then northwest along the Rancho El Tejon line to the southeast corner of Sec. 34, T32S, R30E Mount Diablo Base And Meridian; then north to the northwest corner of Sec. 35, T31S, R30E; then Northeast along the boundary of the Rancho El Tejon Land Grant to the southwest corner of Sec. 18, T. 31 S., R. 31 E.; then east to the southeast corner of Sec. 13, T. 31 S., R. 31 E.; then north along the range line common to R. 31 E. and R. 32 E., Mount Diablo Base and Meridian, to the northwest corner of Sec. 6, T. 29 S., R. 32 E.; then east to the southwest corner of Sec. 31, T. 28 S., R. 32 E.; then north along the range line common to R. 31 E. and R. 32 E. to the northwest corner of Sec. 6, T. 28 S., R. 32 E., then west to the southeast corner of Sec. 36, T. 27 S., R. 31 E., then north along the range line common to R. 31 E. and R. 32 E. to the Kern-Tulare County boundary.				
Kings County	.....	Nonattainment	.....	Nonattainment
Madera County	.....	Nonattainment	.....	Nonattainment.
Merced County	.....	Nonattainment	.....	Nonattainment.
San Joaquin County	.....	Nonattainment	.....	Nonattainment.
Stanislaus County	.....	Nonattainment	.....	Nonattainment.
Tulare County	.....	Nonattainment	.....	Nonattainment.
Yuba City-Marysville, CA:				
Sutter County	.....	Unclassifiable/Attainment.	.....	Nonattainment.
Yuba County (part)	.....	Unclassifiable/Attainment.	.....	Nonattainment.

California—$PM_{2.5}$ [24-hour NAAQS]

Designated area	Designation for the 1997 NAAQS [a]		Designation for the 2006 NAAQS [a]	
	Date [1]	Type	Date [2]	Type
That portion of Yuba County which lies west of the line described as follows: (Mount Diablo Base and Meridian) Beginning at the intersection of the Yuba-Nevada county line and the range line common to ranges R7E and R8E, north to the southeast corner of township T18N R7E, then west along the township line common to T17N and T18N, then north along the range line common to ranges R6E and R7E, then west along the township line common to T19N and T18N to the Yuba-Butte County boundary.				
Rest of State:				
North Coast Air Basin:				
Del Norte County	.....	Unclassifiable/Attainment.	.....	Unclassifiable/Attainment.
Humboldt County	.....	Unclassifiable/Attainment.	.....	Unclassifiable/Attainment.
Mendocino County	.....	Unclassifiable/Attainment.	.....	Unclassifiable/Attainment.
Sonoma County (part)	.....	Unclassifiable/Attainment.	.....	Unclassifiable/Attainment.

California—$PM_{2.5}$ [24-hour NAAQS]

Designated area	Designation for the 1997 NAAQS [a]		Designation for the 2006 NAAQS [a]	
	Date [1]	Type	Date [2]	Type
That portion of Sonoma County which lies north and west of a line described as follows: Beginning at the southeasterly corner of the Rancho Estero Americano, being on the boundary line between Marin and Sonoma Counties, California; thence running northerly along the easterly boundary line of said Rancho Estero Americano to the northeasterly corner thereof, being an angle corner in the westerly boundary line of Rancho Canada de Jonive, thence running along said boundary of Rancho Canada de Jonive westerly; northerly and easterly to its intersection with the easterly line of Graton Road; thence running along the easterly and southerly line of Graton Road northerly and easterly to its intersection with the easterly line of Sullivan Road; thence running northerly along said easterly line of Sullivan Road to the southerly line of Green Valley Road; thence running easterly along the said southerly line of Green Valley Road and easterly along the southerly line of State Highway 116, to the westerly and northerly line of Vine Hill Road; thence running along the westerly and northerly line of Vine Hill Road, northerly and easterly to its intersection with the westerly line of Laguna Road; thence running northerly along the westerly line of Laguna Road and the northerly projection thereof to the northerly line of Trenton Road; thence running westerly along the northerly line of said Trenton Road to the easterly line of Trenton-Healdsburg Road to the easterly line of Eastside Road: thence running northerly along said easterly line of Eastside Road to its intersection with the southerly line of Rancho Sotoyome; thence running easterly along said southerly line of Rancho Sotoyome to its intersection with the Township line common to Townships 8 and 9 north, Mt. Diablo Base and Meridian; thence running easterly along said Township line to its intersection with the boundary line between Sonoma and Napa Counties, State of California.				
Trinity County	.....	Unclassifiable/Attainment.		
Northeast Plateau Air Basin:				
Lassen County	.....	Unclassifiable/Attainment.		
Modoc County	.....	Unclassifiable/Attainment.		

California—$PM_{2.5}$ [24-hour NAAQS]

Designated area	Designation for the 1997 NAAQS [a]		Designation for the 2006 NAAQS [a]	
	Date [1]	Type	Date [2]	Type
Siskiyou County		Unclassifiable/Attainment.		
Lake County Air Basin:				
Lake County		Unclassifiable/Attainment.		Unclassifiable/Attainment.
Upper Sacramento Valley Region:				
Butte County (remainder)		Unclassifiable/Attainment.		
Colusa County		Unclassifiable/Attainment.		Unclassifiable/Attainment.
Glenn County		Unclassifiable/Attainment.		Unclassifiable/Attainment.
Shasta County		Unclassifiable/Attainment.		
Tehama County		Unclassifiable/Attainment.		
Yuba County (remainder)		Unclassifiable/Attainment.		
Sacramento Metropolitan Region:				
Yolo County (remainder)		Unclassifiable/Attainment.		Unclassifiable/Attainment.
Northern Mountain Counties:				
Nevada County		Unclassifiable/Attainment.		Unclassifiable/Attainment.
Plumas County		Unclassifiable/Attainment.		
Sierra County		Unclassifiable/Attainment.		
Central Mountain Counties:				
Amador County		Unclassifiable/Attainment.		Unclassifiable/Attainment.
Calaveras County		Unclassifiable/Attainment.		Unclassifiable/Attainment.
Southern Mountain Counties:				
Mariposa County		Unclassifiable/Attainment.		Unclassifiable/Attainment.
Tuolumne County		Unclassifiable/Attainment.		Unclassifiable/Attainment.
Lake Tahoe Air Basin:				
El Dorado County (remainder)		Unclassifiable/Attainment.		Unclassifiable/Attainment.
Placer County (remainder)		Unclassifiable/Attainment.		Unclassifiable/Attainment.
North Central Coast Air Basin:				
Monterey County		Unclassifiable/Attainment.		Unclassifiable/Attainment.
San Benito County		Unclassifiable/Attainment.		Unclassifiable/Attainment.
Santa Cruz County		Unclassifiable/Attainment.		Unclassifiable/Attainment.
San Luis Obispo County:				
San Luis Obispo County		Unclassifiable/Attainment.		Unclassifiable/Attainment.
Santa Barbara County:				
Santa Barbara County (part) excluding		Unclassifiable/Attainment.		Unclassifiable/Attainment.
Channel Islands Ventura County:				
Ventura County (part) excluding Anacapa and San Nicolas Islands.		Unclassifiable/Attainment.		Unclassifiable/Attainment.
Northern Channel Islands:				
Santa Barbara County (part) the islands located in the South Central Coast Air Basin, including San Miguel, Santa Rosa, Santa Cruz, and San Nicolas.		Unclassifiable/Attainment.		Unclassifiable/Attainment.
Ventura County (part) Anacapa and San Nicolas Islands.		Unclassifiable/Attainment.		Unclassifiable/Attainment.
Great Basin Valleys Air Basin:				
Alpine County		Unclassifiable/Attainment.		Unclassifiable/Attainment.

California—$PM_{2.5}$ [24-hour NAAQS]

Designated area	Designation for the 1997 NAAQS [a]		Designation for the 2006 NAAQS [a]	
	Date [1]	Type	Date [2]	Type
Inyo County (part)	.....	Unclassifiable/Attainment.	.....	Unclassifiable/Attainment.
That portion of Inyo County that Lies outside Hydrologic Unit Number 18090205.				
Mono County	.....	Unclassifiable/Attainment.	.....	Unclassifiable/Attainment.
Coso Junction:				
Inyo County (part)	.....	Unclassifiable/Attainment.	.....	Unclassifiable/Attainment.
That portion of Inyo County that lies inside Hydrologic Unit Number 18090205.				
Eastern Kern County:				
Kern County (part)	.....	Unclassifiable/Attainment.	.....	Unclassifiable/Attainment.

California—$PM_{2.5}$ [24-hour NAAQS]

Designated area	Designation for the 1997 NAAQS [a]		Designation for the 2006 NAAQS [a]	
	Date [1]	Type	Date [2]	Type
That portion of Kern County (with the exception of that portion in Hydrologic Unit Number 18090205—the Indian Wells Valley) east and south of a line described as follows: Beginning at the Kern-Los Angeles County boundary and running north and east along the northwest boundary of the Rancho La Liebre Land Grant to the point of intersection with the range line common to Range 16 West and Range 17 West, San Bernardino Base and Meridian; north along the range line to the point of intersection with the Rancho El Tejon Land Grant boundary; then southeast, northeast, and northwest along the boundary of the Rancho El Tejon Grant to the northwest corner of Section 3, Township 11 North, Range 17 West; then west 1.2 miles; then north to the Rancho El Tejon Land Grant boundary; Then northwest Along the Rancho El Tejon line to the southeast corner of Section 34, Township 32 South, Range 30 East, Mount Diablo Base and Meridian; then north to the northwest corner of Section 35, Township 31 South, Range 30 East; then northeast along the boundary of the Rancho El Tejon Land Grant to the southwest corner of Section 18, Township 31 South, Range 31 East; then east to the southeast corner of Section 13, Township 31 South, Range 31 East; then north along the range line common to Range 31 East and Range 32 East, Mount Diablo Base and Meridian, to the northwest corner of Section 6, Township 29 South, Range 32 East; then east to the southwest corner of Section 31, Township 28 South, Range 32 East; then north along the range line common to Range 31 East and Range 32 East to the northwest corner of Section 6, Township 28 South, Range 32 East, then west to the southeast corner of Section 36, Township 27 South, Range 31 East, then north along the range line common to Range 31 East and Range 32 East to the Kern-Tulare County boundary.				
Indian Wells Valley:				
Kern County (part)	.....	Unclassifiable/Attainment.	.....	Unclassifiable/Attainment.
That portion of Kern County that lies inside Hydrologic Unit Number 18090205.				
Western Mojave Desert and Antelope Valley:				
Los Angeles County (part)	.....	Unclassifiable/Attainment.	.....	Unclassifiable/Attainment.

California—$PM_{2.5}$ [24-hour NAAQS]

Designated area	Designation for the 1997 NAAQS [a]		Designation for the 2006 NAAQS [a]	
	Date [1]	Type	Date [2]	Type
That portion of Los Angeles County which lies north and east of a line described as follows: Beginning at the Los Angeles-San Bernardino County boundary and running west along the Township line common to Township 3 North and Township 2 North, San Bernardino Base and Meridian; then north along the range line common to Range 8 West and Range 9 West; then west along the Township line common to Township 4 North and Township 3 North; then north along the range line common to Range 12 West and Range 13 West to the southeast corner of Section 12, Township 5 North and Range 13 West; then west along the south boundaries of Sections 12, 11, 10, 9, 8, and 7, Township 5 North and Range 13 West to the boundary of the Angeles National Forest which is collinear with the range line common to Range 13 West and Range 14 West; then north and west along the Angeles National Forest boundary to the point of intersection with the Township line common to Township 7 North and Township 6 North (point is at the northwest corner of Section 4 in Township 6 North and Range 14 West); then west along the Township line common to Township 7 North and Township 6 North; then north along the range line common to Range 15 West and Range 16 West to the southeast corner of Section 13, Township 7 North and Range 16 West; then along the south boundaries of Sections 13, 14, 15, 16, 17, and 18, Township 7 North and Range 16 West; then north along the range line common to Range 16 West and Range 17 West to the north boundary of the Angeles National Forest (collinear with the Township line common to Township 8 North and Township 7 North); then west and north along the Angeles National Forest boundary to the point of intersection with the south boundary of the Rancho La Liebre Land Grant; then west and north along this land grant boundary to the Los Angeles-Kern County boundary.				
San Bernardino County (part)	.....	Unclassifiable/Attainment.	.....	Unclassifiable/Attainment.

California—$PM_{2.5}$ [24-hour NAAQS]

Designated area	Designation for the 1997 NAAQS [a]		Designation for the 2006 NAAQS [a]	
	Date [1]	Type	Date [2]	Type
That portion of San Bernardino County (with the exception of that portion in Hydrologic Unit Number 18090205) which lies north and east of a line described as follows: Beginning at the San Bernardino-Riverside County boundary and running north along the range line common to Range 3 East and Range 2 East, San Bernardino Base and Meridian; then west along the Township line common to Township 3 North and Township 2 North to the San Bernardino-Los Angeles County boundary; And that portion of San Bernardino County which lies south and west of a line described as follows: latitude 35 degrees, 10 minutes north and longitude 115 degrees, 45 minutes west.				
Trona:				
San Bernardino County (part)	.....	Unclassifiable/Attainment.	.....	Unclassifiable/Attainment.
That portion of San Bernardino County that lies inside Hydrologic Unit Number 18090205.				
Coachella Valley:				
Riverside County (part)	.....	Unclassifiable/Attainment.	.....	Unclassifiable/Attainment.

California—$PM_{2.5}$ [24-hour NAAQS]

Designated area	Designation for the 1997 NAAQS [a]		Designation for the 2006 NAAQS [a]	
	Date [1]	Type	Date [2]	Type
That portion of Riverside County which lies to the east of a line described as follows: Beginning at the Riverside-San Diego County boundary and running north along the range line common to Range 4 East and Range 3 East, San Bernardino Base and Meridian; then east along the Township line common to Township 8 South and Township 7 South; then north along the range line common to Range 5 East and Range 4 East; then west along the Township line common to Township 6 South and Township 7 South to the southwest corner of Section 34, Township 6 South, Range 4 East; then north along the west boundaries of Sections 34, 27, 22, 15, 10, and 3, Township 6 South, Range 4 East; then west along the Township line common to Township 5 South and Township 6 South; then north along the range line common to Range 4 East and Range 3 East; then west along the south boundaries of Sections 13, 14, 15, 16, 17, and 18, Township 5 South, Range 3 East; then North along the range line common to Range 2 East and Range 3 East; to the Riverside-San Bernardino County line: And that portion of Riverside County which lies to the west of a line described as follows: That segment of the southwestern boundary line of Hydrologic Unit Number 18100100 within Riverside County, further described as follows: Beginning at the Riverside-Imperial County boundary and running north along the range line common to Range 17 East and Range 16 East, San Bernardino Base and Meridian; then northwest along the ridge line of the Chuckwalla Mountains, through Township 8 South, Range 16 East and Township 7 South, Range 16 East, until the Black Butte Mountain, Elevation 4504′; then west and northwest along the ridge line to the southwest corner of Township 5 South, Range 14 East; then north along the range line common to Range 14 East and Range 13 East; then west and northwest along the ridge line to Monument Mountain, elevation 4834′; then southwest and then northwest along the ridge line of the Little San Bernardino Mountains to Quail Mountain, elev. 5814′; then northwest along the ridge line to the Riverside-San Bernardino County line.				

California—$PM_{2.5}$ [24-hour NAAQS]

Designated area	Designation for the 1997 NAAQS [a]		Designation for the 2006 NAAQS [a]	
	Date [1]	Type	Date [2]	Type
Far Eastern Riverside and San Bernardino Counties:				
San Bernardino County (remainder)		Unclassifiable/Attainment.		Unclassifiable/Attainment.
Riverside County (remainder)		Unclassifiable/Attainment.		Unclassifiable/Attainment.
Imperial County (remainder)		Unclassifiable/Attainment.		Unclassifiable Attainment.
San Diego County		Unclassifiable/Attainment.		Unclassifiable/Attainment.

[a] Includes Indian Country located in each county or area, except as otherwise specified.
[1] This date is 90 days after January 5, 2005, unless otherwise noted.
[2] This date is 30 days after November 13, 2009, unless otherwise noted.

California—2008 Lead NAAQS

Designated area	Designation for the 2008 NAAQS [a]	
	Date [1]	Type
Los Angeles County—South Coast Air Basin, CA:		
Los Angeles County (part)	12/31/10	Nonattainment.
That portion of Los Angeles County which lies south and west of line described as follows: Beginning at the Los Angeles-San Bernardino County boundary and running west along the Township line common to Township 3 North and Township 2 North, San Bernardino Base and Meridian; then North along the range line common to Range 8 West and Range 9 West; then west along the Township line common to Township 4 North and Township 3 North; then north along the range line common to Range 12 West and Range 13 West to the southeast corner of Section 12, Township 5 North and Range 13 West; then west along the south boundaries of Sections 12, 11, 10, 9, 8, and 7, Township 5 North and Range 13 West to the boundary of the Angeles National Forest which is collinear with the range line common to Range 13 West and Range 14 West; then north and west along the Angeles National Forest boundary to the point of intersection with the Township line common to Township 7 North and Township 6 North (point is at the northwest corner of Section 4 in Township 6 North and Range 14 West); then west along the Township line common to Township 7 North and Township 6 North; then north along the range line common to Range 15 West and Range 16 West to the southeast corner of Section 13, Township 7 North and Range 16 West; then along the south boundaries of Sections 13, 14, 15, 16, 17 and 18, Township 7 North and Range 16 West; then north along the range line common to Range 16 West and Range 17 West to the north boundary of the Angeles National Forest (collinear with The Township line common to Township 8 North and Township 7 North); then west and north along the Angeles National Forest boundary to the point of intersection with the south boundary of the Rancho La Liebre Land Grant; then west and north along this land grant boundary to the Los Angeles-Kern County boundary.		
Rest of State		Unclassifiable/Attainment.

[a] Includes Indian Country located in each county or area, except as otherwise specified.
[1] December 31, 2011 unless otherwise noted.

[43 FR 8964, Mar. 3, 1978]

EDITORIAL NOTE: For FEDERAL REGISTER citations affecting §81.305, see the List of CFR Sections Affected, which appears in the Finding Aids section of the printed volume and at *www.fdsys.gov*.

EFFECTIVE DATE NOTE: At 77 FR 30099, May 21, 2012, §81.305 was amended by revising the table heading for ''California—Ozone (8-Hour Standard)'' to read ''California—1997 8-Hour Ozone NAAQS (Primary and Secondary)''; and by adding a new table entitled ''California—2008 8-Hour Ozone NAAQS (Primary and Secondary)'' following the newly designated table ''California—1997 8-Hour Ozone NAAQS (Primary and Secondary)'', effective July 20, 2012. For the convenience of the user, the added text is set forth as follows:

§ 81.305 California.

* * * * *

California—2008 8-Hour Ozone NAAQS (Primary and secondary)

Designated area	Designation		Classification	
	Date [1]	Type	Date [1]	Type
Calaveras County, CA: [2] Calaveras County	.....	Nonattainment	.....	Marginal.
Chico (Butte County), CA: [2]	.....	Nonattainment	.....	Marginal.
Butte County				
Berry Creek Rancheria of Maidu Indians of California [3]				
Enterprise Rancheria of Maidu Indians of California [3].				
Mechoopda Indian Tribe of Chico Rancheria [3].				
Mooretown Rancheria of Maidu Indians of California [3].				
Imperial County, CA: [2]	.....	Nonattainment	.....	Marginal.
Imperial County				
Quechan Tribe of the Fort Yuma Indian Reservation [3].				
Torres Martinez Desert Cahuilla Indians [3].				
Kern County (Eastern Kern), CA: [2]	.....	Nonattainment	.....	Marginal.
Kern County (part)				

California—2008 8-Hour Ozone NAAQS (Primary and secondary)

Designated area	Designation		Classification	
	Date [1]	Type	Date [1]	Type
That portion of Kern County (with the exception of that portion in Hydrologic Unit Number 18090205—the Indian Wells Valley) east and south of a line described as follows: Beginning at the Kern-Los Angeles County boundary and running north and east along the northwest boundary of the Rancho La Liebre Land Grant to the point of intersection with the range line common to Range 16 West and Range 17 West, San Bernardino Base and Meridian; north along the range line to the point of intersection with the Rancho El Tejon Land Grant boundary;. then southeast, northeast, and northwest along the boundary of the Rancho El Tejon Grant to the northwest corner of Section 3, Township 11 North, Range 17 West; then west 1.2 miles; then north to the Rancho El Tejon Land Grant boundary; then northwest along the Rancho El Tejon line to the southeast corner of Section 34, Township 32 South, Range 30 East, Mount Diablo Base and Meridian; then north to the northwest corner of Section 35, Township 31 South, Range 30 East; then northeast along the boundary of the Rancho El Tejon Land Grant to the southwest corner of Section 18, Township 31 South, Range 31 East; then east to the southeast corner of Section 13, Township 31 South, Range 31 East; then north along the range line common to Range 31 East and Range 32 East, Mount Diablo Base and Meridian,. to the northwest corner of Section 6, Township 29 South, Range 32 East; then east to the southwest corner of Section 31, Township 28 South, Range 32 East; then north along the range line common to Range 31 East and Range 32 East to the northwest corner of Section 6, Township 28 South, Range 32 East, then west to the southeast corner of Section 36, Township 27 South, Range 31 East, then north along the range line common to Range 31 East and Range 32 East to the Kern-Tulare County boundary.				
Los Angeles-San Bernardino Counties (West Mojave Desert), CA: [2].	.....	Nonattainment	.....	Severe 15.
Los Angeles County (part)				

California—2008 8-Hour Ozone NAAQS (Primary and secondary)

Designated area	Designation		Classification	
	Date [1]	Type	Date [1]	Type
That portion of Los Angeles County which lies north and east of a line described as follows: Beginning at the Los Angeles-San Bernardino County boundary and running west along the Township line common to Township 3 North and Township 2 North, San Bernardino Base and Meridian; then north along the range line common to Range 8 West and Range 9 West; then west along the Township line common to Township 4 North and Township 3 North; then north along the range line common to Range 12 West and Range 13 West to the southeast corner of Section 12, Township 5 North and Range 13 West; then west along the south boundaries of Sections 12, 11, 10, 9, 8, and 7, Township 5 North and Range 13 West to the boundary of the Angeles National Forest which is collinear with the range line common to Range 13 West and Range 14 West; then north and west along the Angeles National Forest boundary to the point of intersection with the Township line common to Township 7 North and Township 6 North (point is at the northwest corner of Section 4 in Township 6 North and Range 14 West); then west along the Township line common to Township 7 North and Township 6 North; then north along the range line common to Range 15 West and Range 16 West to the southeast corner of Section 13, Township 7 North and Range 16 West; then along the south boundaries of Sections 13, 14, 15, 16, 17, and 18, Township 7 North and Range 16 West; then north along the range line common to Range 16 West and Range 17 West to the north boundary of the Angeles National Forest (collinear with the Township line common to Township 8 North and Township 7 North); then west and north along the Angeles National Forest boundary to the point of intersection with the south boundary of the Rancho La Liebre Land Grant; then west and north along this land grant boundary to the Los Angeles-Kern County boundary.				
San Bernardino County (part)				

California—2008 8-Hour Ozone NAAQS (Primary and secondary)

Designated area	Designation		Classification	
	Date [1]	Type	Date [1]	Type
That portion of San Bernardino County which lies north and east of a line described as follows: Beginning at the San Bernardino-Riverside County boundary and running north along the range line common to Range 3 East and Range 2 East, San Bernardino Base and Meridian; then west along the Township line common to Township 3 North and Township 2 North to the San Bernardino-Los Angeles County boundary; and that portion of San Bernardino County which lies south and west of a line described as follows: latitude 35 degrees, 10 minutes north and longitude 115 degrees, 45 minutes west.				
Twenty-Nine Palms Band of Mission Indians of California [3].				
Los Angeles-South Coast Air Basin, CA [2]	.....	Nonattainment	.....	Extreme.
Los Angeles County (part)				

California—2008 8-Hour Ozone NAAQS (Primary and secondary)

Designated area	Designation		Classification	
	Date [1]	Type	Date [1]	Type
That portion of Los Angeles County which lies south and west of a line described as follows: Beginning at the Los Angeles-San Bernardino County boundary and running west along the Township line common to Township 3 North and Township 2 North San Bernardino Base and Meridian; then north along the range line common to Range 8 West and Range 9 West; then west along the Township line common to Township 4 North and Township 3 North; then north along the range line common to Range 12 West and Range 13 West to the southeast corner of Section 12, Township 5 North and Range 13 West; then west along the south boundaries of Sections 12, 11, 10, 9, 8, and 7, Township 5 North and Range 13 West to the boundary of the Angeles National Forest which is collinear with the range line common to Range 13 West and Range 14 West; then north and west along the Angeles National Forest boundary to the point of intersection with the Township line common to Township 7 North and Township 6 North (point is at the northwest corner of Section 4 in Township 6 North and Range 14 West); then west along the Township line common to Township 7 North and Township 6 North; then north along the range line common to Range 15 West and Range 16 West to the southeast corner of Section 13, Township 7 North and Range 16 West; then along the south boundaries of Sections 13, 14, 15, 16, 17, and 18, Township 7 North and Range 16 West; then north along the range line common to Range 16 West and Range 17 West to the north boundary of the Angeles National Forest (collinear with the Township line common to Township 8 North and Township 7 North); then west and north along the Angeles National Forest boundary to the point of intersection with the south boundary of the Rancho La Liebre Land Grant; then west and north along this land grant boundary to the Los Angeles-Kern County boundary.				
Orange County				
Riverside County (part)				

California—2008 8-Hour Ozone NAAQS (Primary and secondary)

Designated area	Designation		Classification	
	Date [1]	Type	Date [1]	Type
That portion of Riverside County which lies to the west of a line described as follows: Beginning at the Riverside-San Diego County boundary and running north along the range line common to Range 4 East and Range 3 East, San Bernardino Base and Meridian; then east along the Township line common to Township 8 South and Township 7 South; then north along the range line common to Range 5 East and Range 4 East; then west along the southern boundaries of Sections 25, 26, and 27, Township 7 South, Range 4 East, then North along the west boundaries of Sections 27, 22, 15, 10, and 3 Township 7 South, Range 4 East, then East along the Township line common to Township 6 South and Township 7 South to the southwest corner of Section 34, Township 6 South, Range 4 East; then north along the west boundaries of Sections 34, 27, 22, 15, 10, and 3, Township 6 South, Range 4 East; then west along the Township line common to Township 5 South and Township 6 South; then north along the range line common to Range 4 East and Range 3 East; then west along the south boundaries of Sections 13, 14, 15, 16, 17, and 18, Township 5 South, Range 3 East; then north along the range line common to Range 2 East and Range 3 East; to the Riverside-San Bernardino County line.				
San Bernardino County (part)				
That portion of San Bernardino County which lies south and west of a line described as follows: Beginning at the San Bernardino-Riverside County boundary and running north along the range line common to Range 3 East and Range 2 East, San Bernardino Base and Meridian; then west along the Township line common to Township 3 North and Township 2 North to the San Bernardino-Los Angeles County boundary.				
Cahuilla Band of Mission Indians of the Cahuilla Reservation [3].				
Ramona Band of Cahuilla [3].				
San Manuel Band of Mission Indians [3].				
Soboba Band of Luiseno Indians [3].				
Mariposa County, CA: [2] Mariposa County	.....	Nonattainment	.....	Marginal.
Nevada County (Western part), CA: [2]	.....	Nonattainment	.....	Marginal.
Nevada County (part)				

California—2008 8-Hour Ozone NAAQS (Primary and secondary)

Designated area	Designation		Classification	
	Date [1]	Type	Date [1]	Type
That portion of Nevada County, which lies west of a line, described as follows: Beginning at the Nevada-Placer County boundary and running north along the western boundaries of Sections 24, 13, 12, 1, Township 17 North, Range 14 East, Mount Diablo Base and Meridian, and Sections 36, 25, 24, 13, 12, Township 18 North, Range 14 East to the Nevada-Sierra County boundary.				
Riverside County (Coachella Valley), CA: [2]	.....	Nonattainment	.....	Severe 15.
Riverside County (part)				
That portion of Riverside County which lies to the east of a line described as follows: Beginning at the Riverside-San Diego County boundary and running north along the range line common to Range 4 East and Range 3 East, San Bernardino Base and Meridian; then east along the Township line common to Township 8 South and Township 7 South; then north along the range line common to Range 5 East and Range 4 East; then west along the Township line common to Township 6 South and Township 7 South to the southwest corner of Section 34, Township 6 South, Range 4 East; then north along the west boundaries of Sections 34, 27, 22, 15, 10, and 3, Township 6 South, Range 4 East; then west along the Township line common to Township 5 South and Township 6 South; then north along the range line common to Range 4 East and Range 3 East; then west along the south boundaries of Sections 13, 14, 15, 16, 17, and 18, Township 5 South, Range 3 East; then north along the range line common to Range 2 East and Range 3 East; to the Riverside-San Bernardino County line. And that portion of Riverside County which lies to the west of a line described as follows: That segment of the southwestern boundary line of hydrologic Unit Number 18100100 within Riverside County.				
Agua Caliente Band of Cahuilla Indians of the Agua Caliente Indian Reservation [3].				
Augustine Band of Cahuilla Indians [3].				
Cabazon Band of Mission Indians [3].				
Santa Rosa Band of Cahuilla Indians [3].				
Torres Martinez Desert Cahuilla Indians [3].				
Twenty-Nine Palms Band of Mission Indians of California [3].				
Sacramento Metro, CA: [2]	.....	Nonattainment	.....	Severe 15.
El Dorado County (part)				

California—2008 8-Hour Ozone NAAQS (Primary and secondary)

Designated area	Designation		Classification	
	Date [1]	Type	Date [1]	Type
All portions of the county except that portion of El Dorado County within the drainage area naturally tributary to Lake Tahoe including said Lake.				
Placer County (part)				
All portions of the county except that portion of Placer County within the drainage area naturally tributary to Lake Tahoe including said Lake, plus that area in the vicinity of the head of the Truckee River described as follows: Commencing at the point common to the aforementioned drainage area crestline and the line common to Townships 15 North and 16 North, Mount Diablo Base and Meridian, and following that line in a westerly direction to the northwest corner of Section 3, Township 15 North, Range 16 East Mount Diablo Base and Meridian, thence south along the west line of Sections 3 and 10, Township 15 North, Range 16 East, Mount Diablo Base and Meridian, to the intersection with the said drainage area crestline, thence following the said drainage area boundary in a southeasterly, then northeasterly direction to and along the Lake Tahoe Dam, thence following the said drainage area crestline in a northeasterly, then northwesterly direction to the point of beginning.				
Sacramento County				
Solano County (part)				

California—2008 8-Hour Ozone NAAQS (Primary and secondary)

Designated area	Designation		Classification	
	Date [1]	Type	Date [1]	Type
That portion of Solano County which lies north and east of a line described as follows: Beginning at the intersection of the westerly boundary of Solano County and the ¼ section line running east and west through the center of Section 34; Township 6 North, Range 2 West, Mount Diablo Base and Meridian, thence east along said ¼ section line to the east boundary of Section 36, Township 6 North, Range 2 West, thence south ½ mile and east 2.0 miles, more or less, along the west and south boundary of Los Putos Rancho to the northwest corner of Section 4, Township 5 North, Range 1 West, thence east along a line common to Township 5 North and Township 6 North to the northeast corner of Section 3, Township 5 North, Range 1 East, thence south along section lines to the southeast corner of Section 10, Township 3 North, Range 1 East, thence east along section lines to the south ¼ corner of Section 8, Township 3 North, Range 2 East, thence east to the boundary between Solano and Sacramento Counties.				
Sutter County (part)				
Portion south of a line connecting the northern border of Yolo County to the SW tip of Yuba County and continuing along the southern Yuba County border to Placer County.				
Yolo County				
Shingle Springs Band of Miwok Indians, Shingle Springs Rancheria (Verona Tract) [3].				
United Auburn Indian Community of the Auburn Rancheria of California [3].				
Yocha Dehe Wintun Nation [3].				
San Diego County, CA: [2]	.....	Nonattainment	.....	Marginal.
San Diego County				
Barona Group of Capitan Grande Band of Mission Indians of the Barona Reservation [3].				
Campo Band of Diegueno Mission Indians of the Campo Indian Reservation [3].				
Capitan Grande Band of Diegueno Mission Indians of California [3].				
Ewiiaapaayp Band of Kumayaay Indians [3].				
Iipay Nation of Santa Ysabel [3].				
Inaja Band of Diegueno Mission Indians of the Inaja and Cosmit Reservation [3].				
Jamul Indian Village of California [3].				
La Jolla Band of Luiseno Indians [3].				
La Posta Band of Diegueno Mission Indians of the La Posta Indian Reservation [3].				
Los Coyotes Band of Cahuilla and Cupeno Indians [3].				
Manzanita Band of Diegueno Mission Indians of the Manzanita Reservation [3].				

California—2008 8-Hour Ozone NAAQS (Primary and secondary)

Designated area	Designation		Classification	
	Date [1]	Type	Date [1]	Type
Mesa Grande Band of Diegueno Mission Indians of the Mesa Grande Reservation [3].				
Pala Band of Luiseno Mission Indians of the Pala Reservation [3].				
Pauma Band of Luiseno Mission Indians of the Pauma and Yuima Reservation [3].				
Rincon Band of Luiseno Mission Indians of the Rincon Reservation [3].				
San Pasqual Band of Diegueno Mission Indians of California [3].				
Sycuan Band of the Kumeyaay Nation [3].				
Viejas (Baron Long) Group of Capitan Grande Band of Mission Indians [3].				
San Francisco Bay Area, CA: [2]	.....	Nonattainment	.....	Marginal.
Alameda County				
Contra Costa County				
Marin County				
Napa County				
San Francisco County				
San Mateo County				
Santa Clara County				
Solano County (part)				
Portion of Solano County which lies south and west of a line described as follows: Beginning at the intersection of the westerly boundary of Solano County and the ¼ section line running east and west through the center of Section 34, T6N, R2W, M.D.B. & M., thence east along said ¼ section line to the east boundary of Section 36, T6N, R2W, thence south ½ mile and east 2.0 miles, more or less, along the west and south boundary of Los Putos Rancho to the northwest corner of Section 4, T5N, R1W, thence east along a line common to T5N and T6N to the northeast corner of Section 3, T5N, R1E, thence south along section lines to the southeast corner of Section 10, T3N, R1E, thence east along section lines to the south ¼ corner of Section 8, T3N, R2E, thence east to the boundary between Solano and Sacramento Counties.				
Sonoma County (part)				

California—2008 8-Hour Ozone NAAQS (Primary and secondary)

Designated area	Designation		Classification	
	Date [1]	Type	Date [1]	Type
That portion of Sonoma County which lies south and east of a line described as follows: Beginning at the southeasterly corner of the Rancho Estero Americano, being on the boundary line between Marin and Sonoma Counties, California; thence running northerly along the easterly boundary line of said Rancho Estero Americano to the northeasterly corner thereof, being an angle corner in the westerly boundary line of Rancho Canada de Jonive; thence running along said boundary of Rancho Canada de Jonive westerly, northerly and easterly to its intersection with the easterly line of Graton Road; thence running along the easterly and southerly line of Graton Road, northerly and easterly to its intersection with the easterly line of Sullivan Road; thence running northerly along said easterly line of Sullivan Road to the southerly line of Green Valley Road; thence running easterly along the said southerly line of Green Valley Road and easterly along the southerly line of State Highway 116, to the westerly line of Vine Hill Road; thence Running along the westerly and northerly line of Vine Hill Road, northerly and easterly to its intersection with the westerly line of Laguna Road; thence running northerly along the westerly line of Laguna Road and the northerly projection thereof to the northerly line of Trenton Road; thence running westerly along the northerly line of said Trenton Road to the easterly line of Trenton-Healdsburg Road; thence running northerly along said easterly line of Trenton-Healdsburg Road to the easterly line of Eastside Road; thence running northerly along said easterly line of Eastside Road to its intersection with the southerly line of Rancho Sotoyome; thence running easterly along said southerly line of Rancho Sotoyome to its intersection with the Township line common to Townships 8 and 9 North, M.D.M.; thence running easterly along said township line to its intersection with the boundary line between Sonoma and Napa Counties.				
Federated Indians of Graton Rancheria [3]				
Lytton Rancheria of California [3].				
San Joaquin Valley, CA: [2]	.....	Nonattainment	.....	Extreme.

California—2008 8-Hour Ozone NAAQS (Primary and secondary)

Designated area	Designation		Classification	
	Date [1]	Type	Date [1]	Type
Fresno County				
Kern County (part)				
That portion of Kern County which lies west and north of a line described as follows: Beginning at the Kern-Los Angeles County boundary and running north and east along the northwest boundary of the Rancho La Libre Land Grant to the point of intersection with the range line common to R. 16 W. and R. 17 W., San Bernardino Base and Meridian; north along the range line to the point of intersection with the Rancho El Tejon Land Grant boundary; then southeast, northeast, and northwest along the boundary of the Rancho El Tejon Land Grant to the northwest corner of S. 3, T. 11 N., R. 17 W.; then west 1.2 miles; then north to the Rancho El Tejon Land Grant boundary; then northwest along the Rancho El Tejon line to the southeast corner of S. 34, T. 32 S., R. 30 E., Mount Diablo Base and Meridian; then north to the northwest corner of S. 35, T. 31 S., R. 30 E.; then northeast along the boundary of the Rancho El Tejon Land Grant to the southwest corner of S. 18, T. 31 S., R. 31 E.; then east to the southeast corner of S. 13, T. 31 S., R. 31 E.; then north along the range line common to R. 31 E. and R. 32 E., Mount Diablo Base and Meridian, to the northwest corner of S. 6, T. 29 S., R. 32 E.; then east to the southwest corner of S. 31, T. 28 S., R. 32 E.; then north along the range line common to R. 31 E. and R. 32 E. to the northwest corner of S. 6, T. 28 S., R. 32 E., then west to the southeast corner of S. 36, T. 27 S., R. 31 E., then north along the range line common to R. 31 E. and R. 32 E. to the Kern-Tulare County boundary.				
Kings County				
Madera County				
Merced County				
San Joaquin County				
Stanislaus County				
Tulare County				
Big Sandy Rancheria of Mono Indians of California [3].				
Cold Springs Rancheria of Mono Indians of California [3].				
Northfork Rancheria of Mono Indians of California [3].				
Picayune Rancheria of Chukchansi Indians of California [3].				
Santa Rosa Indian Community of the Santa Rosa Rancheria [3].				
Table Mountain Rancheria of California [3].				

California—2008 8-Hour Ozone NAAQS (Primary and secondary)

Designated area	Designation		Classification	
	Date [1]	Type	Date [1]	Type
Tule River Indian Tribe of the Tule River Reservation [3].				
San Luis Obispo (Eastern San Luis Obispo), CA: [2]	.....	Nonattainment	.....	Marginal.
San Luis Obispo County (part)				
That portion of San Luis Obispo County that lies east of a line described as follows: Beginning at the San Luis Obispo County/Santa Barbara County boundary and running north along 120 degrees 24 minutes longitude to the intersection with 35 degrees 27 minutes latitude; east along 35 degrees 27 minutes latitude to the intersection with 120 degrees 18 minutes longitude; then north along 120 degrees 18 minutes longitude to the San Luis Obispo County/Monterey County boundary.				
Tuscan Buttes, CA: [2]	.....	Nonattainment	.....	Marginal.
Tehama County (part)				
Those portions of the immediate Tuscan Buttes area at or above 1,800 feet in elevation.				
Ventura County, CA: [2]	.....	Nonattainment	.....	Serious.
Ventura County (part)				
That part of Ventura County excluding the Channel Islands of Anacapa and San Nicolas Islands.				
Morongo Band of Mission Indians [3]	.....	Nonattainment	.....	Serious.
Pechanga Band of Luiseno Mission Indians of the Pechanga Reservation [3].	.....	Nonattainment	.....	Moderate.
Rest of State: [4]				
Alpine, Inyo, and Mono Counties:	.....	Unclassifiable/Attainment		
Alpine County				
Inyo County				
Mono County				
Amador County	.....	Unclassifiable/Attainment		
Channel Islands (Ventura County)	.....	Unclassifiable/Attainment		
Ventura County (part) remainder.				
Colusa County	.....	Unclassifiable/Attainment		
Del Norte, Humboldt, and Trinity Counties):	.....	Unclassifiable/Attainment		
Del Norte County				
Humboldt County				
Trinity County				
Nevada County (part) remainder	.....	Unclassifiable/Attainment		
Glenn County	.....	Unclassifiable/Attainment		
Kern County (part) remainder	.....	Unclassifiable/Attainment		
Lake County	.....	Unclassifiable/Attainment		
Lake Tahoe (El Dorado County Portion):	.....	Unclassifiable/Attainment		
El Dorado County (part) remainder				
Lake Tahoe (Placer County Portion):	.....	Unclassifiable/Attainment		
Placer County (part) remainder.				
Lassen County	.....	Unclassifiable/Attainment		
Mendocino County	.....	Unclassifiable/Attainment		
Modoc County	.....	Unclassifiable/Attainment		
Monterey County		Unclassifiable/Attainment		
Northeastern San Bernardino County and Eastern Riverside County.	.....	Unclassifiable/Attainment		
San Bernardino County (part) remainder				
Riverside County (part) remainder				
Sonoma County (part) remainder	.....	Unclassifiable/Attainment		
Sutter County and Yuba County	.....	Unclassifiable/Attainment		
Sutter County (part) remainder				
Yuba County				
Plumas and Sierra Counties	.....	Unclassifiable/Attainment		
San Benito County	.....	Unclassifiable/Attainment		

California—2008 8-Hour Ozone NAAQS (Primary and secondary)

Designated area	Designation		Classification	
	Date [1]	Type	Date [1]	Type
Santa Barbara County	.....	Unclassifiable/Attainment		
Santa Cruz County	.....	Unclassifiable/Attainment		
Shasta County	.....	Unclassifiable/Attainment		
Siskiyou County	.....	Unclassifiable/Attainment		
Tehama County (part) remainder	.....	Unclassifiable/Attainment		
Tuolumne County	.....	Unclassifiable/Attainment		
San Luis Obispo County (part) remainder	.....	Unclassifiable/Attainment		

[1] This date is July 20, 2012, unless otherwise noted.
[2] Excludes Indian country located in each area, unless otherwise noted.
[3] Includes Indian country of the tribe listed in this table located in the identified area. Information pertaining to areas of Indian country in this table is intended for CAA planning purposes only and is not an EPA determination of Indian country status or any Indian country boundary. EPA lacks the authority to establish Indian country land status, and is making no determination of Indian country boundaries, in this table.
[4] Includes any Indian country in each county or area, unless otherwise specified.

§ 81.306 Colorado.

Colorado—SO_2

Designated Area	Does not meet primary standards	Does not meet secondary standards	Cannot be classified	Better than national standards
Entire State	.....	.....	.....	X

Colorado—Carbon Monoxide

Designated Area	Designation		Classification	
	Date [1]	Type	Date [1]	Type
Colorado Springs Area:	October 25, 1999	Attainment		
Urban Transportation Planing Study Area as defined in 1989..				
Beginning near the Town of Palmer Lake, at the Northwest corner of the Study Area at a point on the El Paso/Douglas County line, also on the Pike National Forest boundary, then:				
east along the County line to Elbert Road; south on Elbert Road to Judge Orr Road; east on Judge Orr Road to Ellicott Highway; south on Ellicott Highway to Squirrel Creek Road; west on Squirrel Creek Road to Williams Creek; south along Williams Creek to the confluence of Williams and Fountain Creeks; south along Fountain Creek to the El Paso/Douglas County line; west on the County line to I–25; north on I–25 to Exit 132; west on McGrath to 35th; south on 35th to Specker; northwest on Specker to Titus Blvd.; west on Titus Blvd. to SH–115;				
south on SH–115 to Rock Creek;				
northwest along Rock Creek to the Pike National Forest boundary; north along the Forest boundary to Old Stage Road; southwest on Old Stage Road to Gold Camp Road; north on Gold Camp Road to High Drive; north on High Drive to Lower Gold Camp Road; north on Lower Gold Camp Road to the Pike National Forest boundary; west along the Forest boundary, following the boundary north, then east to US–24; northwest on US–24 to the Pikes Peak Toll Road; west on the Toll Road to the El Paso/Teller County line;				

Colorado—Carbon Monoxide

Designated Area	Designation		Classification	
	Date [1]	Type	Date [1]	Type
north along the County line to Crystola Creek; west on Crystola Creek to County Road 282, north on Road 282 to US–24; northeast on US–24 to Trout Creek Road; northwest on Trout Creek Road to Trout Creek; north along Trout Creek to the confluence of Trout and Mule Creeks; north along Mule Creek to Long Gulch; east along Long Gulch to White Gulch; east along White Gulch to Rampart Range Road; southeast on Rampart Range Road to the Pike National Forest Boundary; north along the Forest boundary to the El Paso/Douglas County line, to the point of origin.				
El Paso County (part).				
Teller County (part).				
Denver-Boulder Area:				
The boundaries for the Denver nonattainment area for carbon monixide (CO) are described as follows: Start at Colorado Highway 52 where it intersects the eastern boundary of Boulder County; Follow Highway 52 west until it intersects Colorado Highway 119; Follow northern boundary of Boulder city limits west to the 6,000-ft. elevation line; Follow the 6000-ft. elevation line south through Boulder and Jefferson Counties to US 6 in Jefferson County; Follow US 6 west to the Jefferson County-Clear Creek County line; Follow the Jefferson County western boundary south for approximately 16.25 miles; Follow a line east for approximately 3.75 mile to South Turkey Creek; Follow South Turkey Creek northeast for approximately 3.5 miles; Follow a line southeast for approximately 2.0 miles to the junction of South Deer Creek Road and South Deer Creek Canyon Road; Follow South Deer Creek Canyon Road northeast for approximately 3.75 miles; Follow a line southeast for approximately five miles to the northern-most boundary of Pike National Forest where it intersects the Jefferson County-Douglas County line; follow the Pike National forest boundary southeast through Douglas County to the Douglas County-El Paso County line; Follow the southern boundary on Douglas County east to the Elbert County line; Follow the eastern boundary of Douglas County north to the Arapahoe County line; Follow the southern boundary of Araphoe County east to Kiowa Creek; Follow Kiowa Creek northeast through Arapahoe and Adams Counties to the Adams-Weld County line; Follow the northern boundary of Adams County west to the Boulder County line; Follow the eastern boundary of Boulder County north to Highway 52	January 14, 2002	Attainment		
Adams County (part).				
Arapahoe County (part).				
Boulder County (part).				
Denver County.				
Douglas County (part).				
Jefferson County (part).				
Fort Collins Area:.				
Larimer County (part)	Sept. 22, 2003	Attainment		

Colorado—Carbon Monoxide

Designated Area	Designation		Classification	
	Date [1]	Type	Date [1]	Type
Fort Collins Urban Growth Area Boundary as adopted by the City of Fort Collins and the Larimer County Commissioners and in effect as of July 30, 1991..				
Greeley Area:	.....	Attainment		
Weld County (part)	May 10, 1999			
Urban boundaries as defined in the North Front Range Regional Transportation Plan, May, 1990..				
Longmont Area	Nov. 23, 1999	Attainment		
Hwy 52 west from the Boulder/Weld County line to 95th Street/Hoover Road, then north on 95th Street/Hoover Road to the intersection of Plateau Road and SH 119, then west on Plateau Road to the intersection of Hygiene Road, then due north to the Boulder/Larimer County line, then due east to the intersection of the Boulder/Larimer/Weld County lines, then south along the Boulder/Weld County line to Hwy 52, plus the portion of the City of Longmont east of the Boulder/Weld County line in Weld County.				
Boulder County (part):				
Weld County (part):				
State AQCR 1	.....	Unclassifiable/Attainment		
Logan County				
Morgan County				
Phillips County				
Sedgwick County				
Washington County				
Yuma County				
State AQCR 2 (Remainder of)				
Larimer County (part)	.....	Unclassifiable/Attainment		
Area outside Fort Collins Urban Growth Area Boundary				
Weld County (part)				
Remainder of county	.....	Unclassifiable/Attainment		
State AQCR 3 (Remainder of)	.....	Unclassifiable/Attainment		
Adams County (part)				
Remainder of County				
Arapahoe County (part)				
Remainder of County				
Boulder County (part)				
Remainder of County				
Clear Creek County				
Douglas County (part)				
Remainder of County				
Gilpin County				
Jefferson County (part)				
Remainder of County				
State AQCR 4 (Remainder of)	.....	Unclassifiable/Attainment		
El Paso County (part)				
Area other than Urban Transportation Planning Study Area as defined in 1989				
Park County				
Teller County (part)				
Remainder of County				
State AQCR's 5-13	.....	Unclassifiable/Attainment		
Alamosa County				
Archuleta County				
Baca County				
Bent County				
Chaffee County				
Cheyenne County				
Conejos County				
Costilla County				
Crowley County				
Custer County				

Colorado—Carbon Monoxide

Designated Area	Designation		Classification	
	Date [1]	Type	Date [1]	Type
Delta County				
Dolores County				
Eagle County				
Elbert County				
Fremont County				
Garfield County				
Grand County				
Gunnison County				
Hinsdale County				
Huerfano County				
Jackson County				
Kiowa County				
Kit Carson County				
La Plata County				
Lake County				
Las Animas County				
Lincoln County				
Mesa County				
Mineral County				
Moffat County				
Montezuma County				
Montrose County				
Otero County				
Ouray County				
Pitkin County				
Prowers County				
Pueblo County				
Rio Blanco County				
Rio Grande County				
Routt County				
Saguache County				
San Juan County				
San Miguel County				
Summit County				

[1] This date is November 15, 1990, unless otherwise noted.

Colorado—Ozone (1-Hour Standard)[4]

Designated area	Designation		Classification	
	Date [1]	Type	Date [1]	Type
Denver-Boulder Area:				
Adams County (part)				
West of Kiowa Creek	10/11/01	Attainment		
Arapahoe County (part)				
West of Kiowa Creek	.....	Attainment		
Boulder County (part) excluding Rocky Mountain National Park.	.....	Attainment		
Denver County	.....	Attainment		
Douglas County	.....	Attainment		
Jefferson County	.....	Attainment		
State AQCR 01	.....	Unclassifiable/Attainment		
Logan County				
Morgan County				
Phillips County				
Sedgwick County				
Washington County				
Yuma County				
State AQCR 02	.....	Unclassifiable/Attainment		
Larimer County				
Weld County				
State AQCR 03 (Remainder of)	.....	Unclassifiable/Attainment		
Adams County (part) East of Kiowa Creek				
Arapahoe County (part) East of Kiowa Creek				
Boulder County (part) Rocky Mtn. National Park Only				
Clear Creek County				
Gilpin County				
State AQCR 11	.....	Unclassifiable/Attainment		

Colorado—Ozone (1-Hour Standard)[4]

Designated area	Designation		Classification	
	Date [1]	Type	Date [1]	Type
Garfield County				
Mesa County				
Moffat County				
Rio Blanco County				
Rest of State	.....	Unclassifiable/Attainment		
Alamosa County				
Archuleta County				
Baca County				
Bent County				
Chaffee County				
Cheyenne County				
Conejos County				
Costilla County				
Crowley County				
Custer County				
Delta County				
Dolores County				
Eagle County				
El Paso County				
Elbert County				
Fremont County				
Grand County				
Gunnison County				
Hinsdale County				
Huerfano County				
Jackson County				
Kiowa County				
Kit Carson County				
La Plata County				
Lake County				
Las Animas County				
Lincoln County				
Mineral County				
Montezuma County				
Montrose County				
Otero County				
Ouray County				
Park County				
Pitkin County				
Prowers County				
Pueblo County				
Rio Grande County				
Routt County				
Saguache County				
San Juan County				
San Miguel County				
Summit County				
Teller County				

[1] This date is October 18, 2000, unless otherwise noted.
[2] An area designated as an ozone nonattainment area as of the date of enactment of the CAAA of the 1990 that did not violate the ozone NAAQS during the period of 1987–1989.
[3] This date is January 16, 2001.
[4] The 1-hour ozone standard is revoked effective June 15, 2005 for all areas in Colorado except the Denver (Denver-Boulder-Greeley-Ft. Collins-Love) area where it is revoked effective November 20, 2008.

Colorado—PM–10

Designated area	Designation		Classification	
	Date	Type	Date	Type
Archuleta County				
Pagosa Springs Area	8/14/01	Attainment		
Township 35N–Range 2W: Sections 13, 14, 15; Section 23 NE, N ½ SE; Section 24 all except SWSW; Section 25 N ½NE, NENW.				
Township 35N–Range 1W: Section 18 W ½				
Adams, Denver, and Boulder Counties				
Denver Metropolitan area	10/16/02	Attainment		
All of Denver, Jefferson, and Douglas Counties, Boulder County (excluding the Rocky Mountain National Park) and the Colorado automobile inspection and readjustment program portions of Adams and Arapahoe Counties				

Colorado—PM–10

Designated area	Designation		Classification	
	Date	Type	Date	Type
San Miguel County.				
Telluride	8/14/01	Attainment		
The Telluride attainment/maintenance area begins at the intersection of Colorado State Highway 145 and the Telluride service area boundary, as it existed in 1991. The western edge of the nonattainment area until it meets Remine Creek is defined as follows: A tract of land located in a portion of the west one-half of Section 28 and the east one-half of Section 29, Township 43 North, Range 9 west, of New Mexico Principal Meridian, County of San Miguel, State of Colorado, described as follows: Beginning at the southwest corner of the said Section 28; Thence N 89 deg.36′00″ W. 292.70 Feet; Thence S 04 deg.05′12″ W. 538.63 Feet; Thence N 03 deg.29′42″ W. 780.19 Feet; Thence N 22 deg.15′00″ E. 3344.16 Feet; Thence S 51 deg.51′49″ E. 570.44 Feet; Thence S 03 deg.15′36″ E. 1106.22 Feet; Thence S 45 deg.24′42″ E. 546.96 Feet; Thence S 28 deg.41′12″ W. 549.62 Feet; Thence S 29 deg.40′09″ E. 169.68 Feet; Thence S 44 deg.30′03″ W. 649.51 Feet; Thence S 85 deg.54′00″ E. 660.00 Feet; Thence S 04 deg.06′00″ W. 660.00 Feet; Thence N 89 deg.56′00″ E. 1318.68 Feet; to the true point of beginning containing 11249 acres as described above. Then, at Remine Creek, the attainment/maintenance boundary follows the service area boundary for 9.65 miles to the 9,200 foot contour line. The boundary then intersects Bear Creek. Here the attainment/maintenance boundary diverges from the service area boundary (9,200 foot contour line). The attainment/maintenance boundary continues in a west, southwest direction for 0.92 miles from the intersection of the 9,200 foot contour line and Bear Creek to the top of ski lift number 9 in the Telluride Ski Area at an elevation of about 11,900 feet. The boundary then shifts and runs in a north-westerly direction for 0.83 miles from the top of lift 9 to the top of lift 7, which is located at an elevation of 10,490 feet. From the top of lift 7, the attainment/maintenance boundary continues in a north-westerly direction for 0.5 miles to the intersection of lift 3 with the 10,000 foot control line. The attainment/maintenance boundary follows the 10,000 foot contour line in a south, south-west direction for 3.2 miles, until it intersects Skunk Creek. Here the boundary diverges from the 10,000 foot contour line and follows Skunk Creek in a northerly direction for 2.25 miles. At the intersection of Skunk Creek and Colorado State Highway 145, the attainment/maintenance boundary leaves the creek and follows Highway 145 in a northerly direction until it meets the service area boundary as it existed prior to changes adopted in 1991.				
Prowers County				
Lamar	12/27/05	Attainment	.....	
Pitkin County:.				
Aspen/Pitkin County Area—The area encompassed by the following Parcel ID numbers, as defined by the Pitkin County Planning Department: 2337–29, 2737–28, 2737–21, 2737–20, 2737–19, 2737–18, 2737–17, 2737–08, 2737–07, 2737–06, 2735–22, 2735–15, 2735–14, 2735–13, 2735–12, 2735–11, 2735–10, 2735–03, 2735–02, 2735–01, 2641–31, 2643–36, 2643–35, 2643–34, 2643–27, 2643–26.	7/14/03	Attainment.		
Fremont County				
Canon City Area	7/31/00	Attainment		

Colorado—PM–10

Designated area	Designation		Classification	
	Date	Type	Date	Type
Township 18S—Range 70W: All of sections 21, 22, 27, 28, 33, and 34; the E½, NENW, NESW, SENW, SESW quarters of sections 20, 29, 32; and the W½ of sections 23, 26, and 35; Township 19S—Range 70W: All of sections 3, 4, 9, 10; E½, NENW, NESW, SENW, SESW quarters of sections 5 and 8; W½ of sections 2 and 11.				
Routt County (part):				
Steamboat Springs	11/24/04	Attainment.		
On the East—The Routt National Forest.				
On the South—The southern border of sections 19, 10, 21, T4N, R84W of the 6th P.M. and the southern border of sections 23, 24, T4N, R85W of the 6th P.M.				
On the West—Beginning at the southwestern corner of section 23, T4N, R85W of the 6th P.M. North along the western border of sections 23, 14, 11, T4N, R85W. Thence, along the ridge which bisects sections 35, 36, 25, 24, 13, 14, 11, 12, 1, T5N, R85W, and sections 36, 25, 24, T6N, R85W. Thence heading northwest along the ridge which bisects sections 23, 15, 10, 9, 4, T6N, R85W of 6th P.M. Thence, heading northeast along the ridge which bisects sections 33, 34, 35, 36, 25, T7N, R85W and sections 30 and 10 of T7N, R84W. Thence, north along the N 1/2 of the western edge of section 19, to the NW corner of section 18, T7N, R84W.				
On the North—The northern boundary of sections 16, 17, 18, T7N, R84W of 6th P.M.				
AQCR 1	11/15/90	Unclassifiable		
AQCR 2	11/15/90	Unclassifiable		
AQCR 3 (excluding the Denver Metropolitan PM–10 nonattainment area).	11/15/90	Unclassifiable		
AQCR 4	11/15/90	Unclassifiable		
AQCR 5	11/15/90	Unclassifiable		
AQCR 6 (excluding the Lamar PM–10 nonattainment area)	11/15/90	Unclassifiable		
AQCR 7	11/15/90	Unclassifiable		
AQCR 8	11/15/90	Unclassifiable		
AQCR 9 (excluding the Pagosa Springs PM–10 nonattainment area)	11/15/90	Unclassifiable		
AQCR 10 (excluding the Telluride PM–10 nonattainment area)	11/15/90	Unclassifiable		
AQCR 11	11/15/90	Unclassifiable		
AQCR 12 (excluding the Aspen/Pitkin County and Steamboat Springs Area Airshed PM–10 nonattainment areas).	11/15/90	Unclassifiable		
AQCR 13 (excluding the Canon City PM–10 nonattainment area)	1/15/90	Unclassifiable		

Colorado—NO_2 (1971 Annual Standard)

Designated area	Better than national standards
Entire State	X

Colorado—NO_2 (2010 1-Hour Standard)

Designated area	Designation [a]	
	Date [1]	Type
State AQCR 01:		
Logan County		Unclassifiable/Attainment.
Morgan County		Unclassifiable/Attainment.
Phillips County		Unclassifiable/Attainment.
Sedgwick County		Unclassifiable/Attainment.
Washington County		Unclassifiable/Attainment.
Yuma County		Unclassifiable/Attainment.
State AQCR 02:		
Larimer County		Unclassifiable/Attainment.
Weld County		Unclassifiable/Attainment.
State AQCR 03:		
Adams County		Unclassifiable/Attainment.
Arapahoe County		Unclassifiable/Attainment.
Boulder County		Unclassifiable/Attainment.
Broomfield County		Unclassifiable/Attainment.
Clear Creek County		Unclassifiable/Attainment.

Colorado—NO_2 (2010 1-Hour Standard)

Designated area	Designation [a]	
	Date [1]	Type
Denver County		Unclassifiable/Attainment.
Douglas County		Unclassifiable/Attainment.
Jefferson County		Unclassifiable/Attainment.
Gilpin County		Unclassifiable/Attainment.
State AQCR 04:		
El Paso County		Unclassifiable/Attainment.
Park County		Unclassifiable/Attainment.
Teller County		Unclassifiable/Attainment.
State AQCR 05:		
Cheyenne County		Unclassifiable/Attainment.
Elbert County		Unclassifiable/Attainment.
Kit Carson County		Unclassifiable/Attainment.
Lincoln County		Unclassifiable/Attainment.
State AQCR 06:		
Baca County		Unclassifiable/Attainment.
Bent County		Unclassifiable/Attainment.
Crowley County		Unclassifiable/Attainment.
Kiowa County		Unclassifiable/Attainment.
Otero County		Unclassifiable/Attainment.
Prowers County		Unclassifiable/Attainment.
State AQCR 07:		
Huerfano County		Unclassifiable/Attainment.
Las Animas County		Unclassifiable/Attainment.
Pueblo County		Unclassifiable/Attainment.
State AQCR 08:		
Alamosa County		Unclassifiable/Attainment.
Conejos County		Unclassifiable/Attainment.
Costilla County		Unclassifiable/Attainment.
Mineral County		Unclassifiable/Attainment.
Rio Grande County		Unclassifiable/Attainment.
Saguache County		Unclassifiable/Attainment.
State AQCR 09:		
Archuleta County		Unclassifiable/Attainment.
Dolores County		Unclassifiable/Attainment.
La Plata County		Unclassifiable/Attainment.
Montezuma County		Unclassifiable/Attainment.
San Juan County		Unclassifiable/Attainment.
State AQCR 10:		
Delta County		Unclassifiable/Attainment.
Gunnison County		Unclassifiable/Attainment.
Hinsdale County		Unclassifiable/Attainment.
Montrose County		Unclassifiable/Attainment.
Ouray County		Unclassifiable/Attainment.
San Miguel County		Unclassifiable/Attainment.
State AQCR 11:		
Garfield County		Unclassifiable/Attainment.
Mesa County		Unclassifiable/Attainment.
Moffat County		Unclassifiable/Attainment.
Rio Blanco County		Unclassifiable/Attainment.
State AQCR 12:		
Eagle County		Unclassifiable/Attainment.
Grand County		Unclassifiable/Attainment.
Jackson County		Unclassifiable/Attainment.
Pitkin County		Unclassifiable/Attainment.
Routt County		Unclassifiable/Attainment.
Summit County		Unclassifiable/Attainment.
State AQCR 13:		
Chaffee County		Unclassifiable/Attainment.
Custer County		Unclassifiable/Attainment.
Fremont County		Unclassifiable/Attainment.
Lake County		Unclassifiable/Attainment.

[a] Includes Indian Country located in each county or area, except as otherwise specified.
[1] This date is 90 days after October 31, 2011, unless otherwise noted.

Colorado—Ozone (8-Hour Standard)

Designated area	Designation [a]		Category/classification	
	Date [1]	Type	Date [1]	Type
Denver-Boulder-Greeley-Ft. Collins-Loveland, CO:				

Colorado—Ozone (8-Hour Standard)

Designated area	Designation [a]		Category/classification	
	Date [1]	Type	Date [1]	Type
Adams County	[2]	Nonattainment	6/13/12	Subpart 2/Marginal.
Arapahoe County	[2]	Nonattainment	6/13/12	Subpart 2/Marginal.
Boulder County (includes part of Rocky Mtn. Nat. Park).	[2]	Nonattainment	6/13/12	Subpart 2/Marginal.
Broomfield County	[2]	Nonattainment	6/13/12	Subpart 2/Marginal.
Denver County	[2]	Nonattainment	6/13/12	Subpart 2/Marginal.
Douglas County	[2]	Nonattainment	6/13/12	Subpart 2/Marginal.
Jefferson County	[2]	Nonattainment	6/13/12	Subpart 2/Marginal.
Larimer County (part)	[2]	Nonattainment	6/13/12	Subpart 2/Marginal.
(includes part of Rocky Mtn. Nat. Park). That portion of the county that lies south of a line described as follows: Beginning at a point on Larimer County's eastern boundary and Weld County's western boundary intersected by 40 degrees, 42 minutes, and 47.1 seconds north latitude, proceed west to a point defined by the intersection of 40 degrees, 42 minutes, 47.1 seconds north latitude and 105 degrees, 29 minutes, and 40.0 seconds west longitude, thence proceed south on 105 degrees, 29 minutes, 40.0 seconds west longitude to the intersection with 40 degrees, 33 minutes and 17.4 seconds north latitude, thence proceed west on 40 degrees, 33 minutes, 17.4 seconds north latitude until this line intersects Larimer County's western boundary and Grand County's eastern boundary.				
Weld County (part)	[2]	Nonattainment	6/13/12	Subpart 2/Marginal.
That portion of the county that lies south of a line described as follows: Beginning at a point on Weld County's eastern boundary and Logan County's western boundary intersected by 40 degrees, 42 minutes, 47.1 seconds north latitude, proceed west on 40 degrees, 42 minutes, 47.1 seconds north latitude until this line intersects Weld County's western boundary and Larimer County's eastern boundary.				
State AQCR 01	.....	Unclassifiable/Attainment		
Logan County				
Phillips County				
Sedgwick County				
Washington County				
Yuma County				
State AQCR 03 (remainder of)	.....	Unclassifiable/Attainment		
Clear Creek County				
Gilpin County				
State AQCR 11	.....	Unclassifiable/Attainment		
Garfield County				
Mesa County				
Moffat County				
Rio Blanco County				
Rest of State	.....	Unclassifiable/Attainment		
Alamosa County				
Archuleta County				
Baca County				
Bent County				
Chaffee County				
Cheyenne County				

Colorado—Ozone (8-Hour Standard)

Designated area	Designation [a]		Category/classification	
	Date [1]	Type	Date [1]	Type
Conejos County				
Costilla County				
Crowley County				
Custer County				
Delta County				
Dolores County				
Eagle County				
El Paso County				
Elbert County				
Fremont County				
Grand County (includes portion of W. Rocky Mtn. Nat. Park)				
Gunnison County				
Hinsdale County				
Huerfano County				
Jackson County				
Kiowa County				
Kit Carson County				
La Plata County				
Lake County				
Larimer County (part) remainder				
Las Animas County				
Lincoln County				
Mineral County				
Montezuma County				
Montrose County				
Morgan County				
Otero County				
Ouray County				
Park County				
Pitkin County				
Prowers County				
Pueblo County				
Rio Grande County				
Routt County				
Saguache County				
San Juan County				
San Miguel County				
Summit County				
Teller County				
Weld County (part) remainder				

[a] Includes Indian Country located in each county or area, except as otherwise specified.
[1] This date is June 15, 2004, unless otherwise noted.
[2] Effective November 20, 2007.

Colorado—$PM_{2.5}$ (Annual NAAQS)

Designated area	Designation [a]	
	Date [1]	Type
Denver-Boulder Area:		
Adams County (part)		Unclassifiable/Attainment.
West of Kiowa Creek		
Arapahoe County (part)		Unclassifiable/Attainment.
West of Kiowa Creek		
Boulder County (part)		Unclassifiable/Attainment.
Excluding Rocky Mountain National Park		
Broomfield County		Unclassifiable/Attainment.
Denver County		Unclassifiable/Attainment.
Douglas County		Unclassifiable/Attainment.
Jefferson County		Unclassifiable/Attainment.
State AQCR 01:		
Logan County		Unclassifiable/Attainment.
Morgan County		Unclassifiable/Attainment.
Phillips County		Unclassifiable/Attainment.
Sedgwick County		Unclassifiable/Attainment.
Washington County		Unclassifiable/Attainment.
Yuma County		Unclassifiable/Attainment.
State AQCR 02:		
Larimer County		Unclassifiable/Attainment.

Colorado—$PM_{2.5}$ (Annual NAAQS)

Designated area	Designation [a]	
	Date [1]	Type
Weld County		Unclassifiable/Attainment.
State AQCR 03 (remainder of):		
Adams County (remainder)		Unclassifiable/Attainment.
Arapahoe County (remainder)		Unclassifiable/Attainment.
Boulder County (remainder)		Unclassifiable/Attainment.
Clear Creek County		Unclassifiable/Attainment.
Gilpin County		Unclassifiable/Attainment.
State AQCR 04:		
El Paso County		Unclassifiable/Attainment.
Park County		Unclassifiable/Attainment.
Teller County		Unclassifiable/Attainment.
State AQCR 05:		
Cheyenne County		Unclassifiable/Attainment.
Elbert County		Unclassifiable/Attainment.
Kit Carson County		Unclassifiable/Attainment.
Lincoln County		Unclassifiable/Attainment.
State AQCR 06:		
Baca County		Unclassifiable/Attainment.
Bent County		Unclassifiable/Attainment.
Crowley County		Unclassifiable/Attainment.
Kiowa County		Unclassifiable/Attainment.
Otero County		Unclassifiable/Attainment.
Prowers County		Unclassifiable/Attainment.
State AQCR 07:		
Huerfano County		Unclassifiable/Attainment.
Las Animas County		Unclassifiable/Attainment.
Pueblo County		Unclassifiable/Attainment.
State AQCR 08:		
Alamosa County		Unclassifiable/Attainment.
Conejos County		Unclassifiable/Attainment.
Costilla County		Unclassifiable/Attainment.
Mineral County		Unclassifiable/Attainment.
Rio Grande County		Unclassifiable/Attainment.
Saguache County		Unclassifiable/Attainment.
State AQCR 09:		
Archuleta County		Unclassifiable/Attainment.
Dolores County		Unclassifiable/Attainment.
La Plata County		Unclassifiable/Attainment.
Montezuma County		Unclassifiable/Attainment.
San Juan County		Unclassifiable/Attainment.
State AQCR 10:		
Delta County		Unclassifiable/Attainment.
Gunnison County		Unclassifiable/Attainment.
Hinsdale County		Unclassifiable/Attainment.
Montrose County		Unclassifiable/Attainment.
Ouray County		Unclassifiable/Attainment.
San Miguel County		Unclassifiable/Attainment.
State AQCR 11:		
Garfield County		Unclassifiable/Attainment.
Mesa County		Unclassifiable/Attainment.
Moffat County		Unclassifiable/Attainment.
Rio Blanco County		Unclassifiable/Attainment.
State AQCR 12:		
Eagle County		Unclassifiable/Attainment.
Grand County		Unclassifiable/Attainment.
Jackson County		Unclassifiable/Attainment.
Pitkin County		Unclassifiable/Attainment.
Routt County		Unclassifiable/Attainment.
Summit County		Unclassifiable/Attainment.
State AQCR 13:		
Chaffee County		Unclassifiable/Attainment.
Custer County		Unclassifiable/Attainment.
Fremont County		Unclassifiable/Attainment.
Lake County		Unclassifiable/Attainment.

[a] Includes Indian Country located in each county or area, except as otherwise specified.
[1] This date is 90 days after January 5, 2005, unless otherwise noted.

Colorado—$PM_{2.5}$ [24-hour NAAQS]

Designated area	Designation for the 1997 NAAQS [a]		Designation for the 2006 NAAQS [a]	
	Date [1]	Type	Date [2]	Type
Denver-Boulder Area:				
Adams County (part) West of Kiowa Creek.		Unclassifiable/Attainment.		Unclassifiable/Attainment.
Arapahoe County (part) West of Kiowa Creek.		Unclassifiable/Attainment.		Unclassifiable/Attainment.
Boulder County (part) Excluding Rocky Mountain National Park.		Unclassifiable/Attainment.		Unclassifiable/Attainment.
Broomfield County		Unclassifiable/Attainment.		Unclassifiable/Attainment.
Denver County		Unclassifiable/Attainment.		Unclassifiable/Attainment.
Douglas County		Unclassifiable/Attainment.		Unclassifiable/Attainment.
Jefferson County		Unclassifiable/Attainment.		Unclassifiable/Attainment.
State AQCR 01:				
Logan County		Unclassifiable/Attainment.		Unclassifiable/Attainment.
Morgan County		Unclassifiable/Attainment.		Unclassifiable/Attainment.
Phillips County		Unclassifiable/Attainment.		Unclassifiable/Attainment.
Sedgwick County		Unclassifiable/Attainment.		Unclassifiable/Attainment.
Washington County		Unclassifiable/Attainment.		Unclassifiable/Attainment.
Yuma County		Unclassifiable/Attainment.		Unclassifiable/Attainment.
State AQCR 02:				
Larimer County		Unclassifiable/Attainment.		Unclassifiable/Attainment.
Weld County		Unclassifiable/Attainment.		Unclassifiable/Attainment.
State AQCR 03 (remainder of):				
Adams County (remainder)		Unclassifiable/Attainment.		Unclassifiable/Attainment.
Arapahoe County (remainder)		Unclassifiable/Attainment.		Unclassifiable/Attainment.
Boulder County (remainder)		Unclassifiable/Attainment.		Unclassifiable/Attainment.
Clear Creek County		Unclassifiable/Attainment.		Unclassifiable/Attainment.
Gilpin County		Unclassifiable/Attainment.		Unclassifiable/Attainment.
State AQCR 04:				
El Paso County		Unclassifiable/Attainment.		Unclassifiable/Attainment.
Park County		Unclassifiable/Attainment.		Unclassifiable/Attainment.
Teller County		Unclassifiable/Attainment.		Unclassifiable/Attainment.
State AQCR 05:				
Cheyenne County		Unclassifiable/Attainment.		Unclassifiable/Attainment.
Elbert County		Unclassifiable/Attainment.		Unclassifiable/Attainment.
Kit Carson County		Unclassifiable/Attainment.		Unclassifiable/Attainment.
Lincoln County		Unclassifiable/Attainment.		Unclassifiable/Attainment.
State AQCR 06:				
Baca County		Unclassifiable/Attainment.		Unclassifiable/Attainment.
Bent County		Unclassifiable/Attainment.		Unclassifiable/Attainment.
Crowley County		Unclassifiable/Attainment.		Unclassifiable/Attainment.
Kiowa County		Unclassifiable/Attainment.		Unclassifiable/Attainment.
Otero County		Unclassifiable/Attainment.		Unclassifiable/Attainment.

Colorado—$PM_{2.5}$ [24-hour NAAQS]

Designated area	Designation for the 1997 NAAQS [a]		Designation for the 2006 NAAQS [a]	
	Date [1]	Type	Date [2]	Type
Prowers County		Unclassifiable/Attainment.		Unclassifiable/Attainment.
State AQCR 07:				
Huerfano County		Unclassifiable/Attainment.		Unclassifiable/Attainment.
Las Animas County		Unclassifiable/Attainment.		Unclassifiable/Attainment.
Pueblo County		Unclassifiable/Attainment.		Unclassifiable/Attainment.
State AQCR 08:				
Alamosa County		Unclassifiable/Attainment.		Unclassifiable/Attainment.
Conejos County		Unclassifiable/Attainment.		Unclassifiable/Attainment.
Costilla County		Unclassifiable/Attainment.		Unclassifiable/Attainment.
Mineral County		Unclassifiable/Attainment.		Unclassifiable/Attainment.
Rio Grande County		Unclassifiable/Attainment.		Unclassifiable/Attainment.
Saguache County		Unclassifiable/Attainment.		Unclassifiable/Attainment.
State AQCR 09:				
Archuleta County		Unclassifiable/Attainment.		Unclassifiable/Attainment.
Dolores County		Unclassifiable/Attainment.		Unclassifiable/Attainment.
La Plata County		Unclassifiable/Attainment.		Unclassifiable/Attainment.
Montezuma County		Unclassifiable/Attainment.		Unclassifiable/Attainment.
San Juan County		Unclassifiable/Attainment.		Unclassifiable/Attainment.
State AQCR 10:				
Delta County		Unclassifiable/Attainment.		Unclassifiable/Attainment.
Gunnison County		Unclassifiable/Attainment.		Unclassifiable/Attainment.
Hinsdale County		Unclassifiable/Attainment.		Unclassifiable/Attainment.
Montrose County		Unclassifiable/Attainment.		Unclassifiable/Attainment.
Ouray County		Unclassifiable/Attainment.		Unclassifiable/Attainment.
San Miguel County		Unclassifiable/Attainment.		Unclassifiable/Attainment.
State AQCR 11:				
Garfield County		Unclassifiable/Attainment.		Unclassifiable/Attainment.
Mesa County		Unclassifiable/Attainment.		Unclassifiable/Attainment.
Moffat County		Unclassifiable/Attainment.		Unclassifiable/Attainment.
Rio Blanco County		Unclassifiable/Attainment.		Unclassifiable/Attainment.
State AQCR 12:				
Eagle County		Unclassifiable/Attainment.		Unclassifiable/Attainment.
Grand County		Unclassifiable/Attainment.		Unclassifiable/Attainment.
Jackson County		Unclassifiable/Attainment.		Unclassifiable/Attainment.
Pitkin County		Unclassifiable/Attainment.		Unclassifiable/Attainment.
Routt County		Unclassifiable/Attainment.		Unclassifiable/Attainment.
Summit County		Unclassifiable/Attainment.		Unclassifiable/Attainment.
State AQCR 13:				
Chaffee County		Unclassifiable/Attainment.		Unclassifiable/Attainment.

Colorado—$PM_{2.5}$ [24-hour NAAQS]

Designated area	Designation for the 1997 NAAQS [a]		Designation for the 2006 NAAQS [a]	
	Date [1]	Type	Date [2]	Type
Custer County	.....	Unclassifiable/Attainment.	.....	Unclassifiable/Attainment.
Fremont County	.....	Unclassifiable/Attainment.	.....	Unclassifiable/Attainment.
Lake County	.....	Unclassifiable/Attainment.	.....	Unclassifiable/Attainment.

[a] Includes Indian Country located in each county or area, except as otherwise specified.
[1] This date is 90 days after January 5, 2005, unless otherwise noted.
[2] This date is 30 days after November 13, 2009, unless otherwise noted.

Colorado—2008 Lead NAAQS

Designated area	Designation for the 2008 NAAQS [a]	
	Date [1]	Type
Whole State	.....	Unclassifiable/Attainment.

[a] Includes Indian Country located in each county or area, except as otherwise specified.
[1] December 31, 2011 unless otherwise noted.

[43 FR 8964, Mar. 3, 1978]

EDITORIAL NOTE: For FEDERAL REGISTER citations affecting § 81.306 see the List of CFR Sections Affected, which appears in the Finding Aids section of the printed volume and at *www.fdsys.gov*.

EFFECTIVE DATE NOTE: At 77 FR 30110, May 21, 2012, § 81.306 was amended by revising the table heading for ''Colorado—Ozone (8-Hour Standard)'' to read ''Colorado—1997 8-Hour Ozone NAAQS (Primary and Secondary)''; and by adding a new table entitled ''Colorado—2008 8-Hour Ozone NAAQS (Primary and Secondary)'' following the newly designated table ''Colorado—1997 8-Hour Ozone NAAQS (Primary and Secondary)'', effective July 20, 2012. For the convenience of the user, the added text is set forth as follows:

§ 81.306 Colorado.

* * * * *

Colorado—2008 8-Hour Ozone NAAQS (Primary and secondary)

Designated area	Designation		Classification	
	Date [1]	Type	Date [1]	Type
Denver-Boulder-Greeley-Ft. Collins-Loveland, CO: [2]	.....	Nonattainment	.....	Marginal.
Adams County				
Arapahoe County				
Boulder County				
Broomfield County				
Denver County				
Douglas County				
Jefferson County				
Larimer County (part)				

Colorado—2008 8-Hour Ozone NAAQS (Primary and secondary)

Designated area	Designation		Classification	
	Date [1]	Type	Date [1]	Type
That portion of the county that lies south of a line described as follows: Beginning at a point on Larimer County's eastern boundary and Weld County's western boundary intersected by 40 degrees, 42 minutes, and 47.1 seconds north latitude, proceed west to a point defined by the intersection of 40 degrees, 42 minutes, 47.1 seconds north latitude and 105 degrees, 29 minutes, and 40.0 seconds west longitude, thence proceed south on 105 degrees, 29 minutes, 40.0 seconds west longitude to the intersection with 40 degrees, 33 minutes and 17.4 seconds north latitude, thence proceed west on 40 degrees, 33 minutes, 17.4 seconds north latitude until this line intersects Larimer County's western boundary and Grand County's eastern boundary.				
Weld County (part)				
That portion of the county that lies south of a line described as follows: Beginning at a point on Weld County's eastern boundary and Logan County's western boundary intersected by 40 degrees, 42 minutes, 47.1 seconds north latitude, proceed west on 40 degrees, 42 minutes, 47.1 seconds north latitude until this line intersects Weld County's western boundary and Larimer County's eastern boundary.				
Southern Ute Indian Tribe of the Southern Ute Reservation [3].	.....	Unclassifiable/Attainment		
Rest of State and Rest of Indian Country	.....	Unclassifiable/Attainment		

[1] This date is July 20, 2012, unless otherwise noted.
[2] Excludes Indian country located in each area, unless otherwise noted.
[3] Includes Indian country of the tribe listed in this table located in the identified area. Information pertaining to areas of Indian country in this table is intended for CAA planning purposes only and is not an EPA determination of Indian country status or any Indian country boundary. EPA lacks the authority to establish Indian country land status, and is making no determination of Indian country boundaries, in this table.

* * * * *

§ 81.307 Connecticut.

Connecticut—TSP

Designated area	Does not meet primary standards	Does not meet secondary standards	Cannot be classified	Better than national standards
AQCR 41	.....	.....	.....	X
AQCR 42	.....	.....	.....	X
AQCR 43	.....	.....	.....	X
AQCR 44	.....	.....	.....	X

Connecticut—SO_2

Designated area	Does not meet primary standards	Does not meet secondary standards	Cannot be classified	Better than national standards
AQCR 41				X
AQCR 42				X
AQCR 43				X
AQCR 44				X

Connecticut—Carbon Monoxide

Designated area	Designation		Classification	
	Date [1]	Type	Date [1]	Type
Hartford-New Britain-Middletown Area:				
Hartford County (part)	1/2/96	Attainment		
Bristol City, Burlington Town, Avon Town, Bloomfield Town, Canton Town, E. Granby Town, E. Hartford Town, E. Windsor Town, Enfield Town, Farmington Town, Glastonbury Town, Granby Town, Hartford city, Manchester Town, Marlborough Town, Newington Town, Rocky Hill Town, Simsbury Town, S. Windsor Town, Suffield Town, W. Hartford Town, Wethersfield Town, Windsor Town, Windsor Locks Town, Berlin Town, New Britain city, Plainville Town, and Southington Town.				
Litchfield County (part)	1/2/96	Attainment		
Plymouth Town.				
Middlesex County (part)	1/2/96	Attainment		
Cromwell Town, Durham Town, E. Hampton Town, Haddam Town, Middlefield Town, Middletown City, Portland Town, E. Haddam Town.				
Tolland County (part)	1/2/96	Attainment		
Andover Town, Bolton Town, Ellington Town, Hebron Town, Somers Town, Tolland Town, and Vernon Town.				
New Haven—Meriden—Waterbury Area:				
Fairfield County (part)	12/4/98	Attainment		
Shelton City.				
Litchfield County (part)	12/4/98	Attainment		
Bethlehem Town, Thomaston Town, Watertown, Woodbury Town.				
New Haven County	12/4/98	Attainment		
New York-N. ew Jersey-Long Island Area:				
Fairfield County (part)	5/10/99	Attainment		
All cities and townships except Shelton City.				
Litchfield County (part)	5/10/99	Attainment		
Bridgewater Town, New Milford Town.				
AQCR 041 Eastern Connecticut Intrastate		Unclassifiable/Attainment		
Middlesex County (part).				
All portions except cities and towns in Hartford Area.				
New London County.				
Tolland County (part).				
All portions except cities and towns in Hartford Area.				
Windham County.				
AQCR 044 Northwestern Connecticut Intrastate		Unclassifiable/Attainment		
Hartford County (part) Hartland Township.				
Litchfield County (part).				
All portions except cities and towns in Hartford, New Haven, and New York Areas.				

[1] This date is November 15, 1990, unless otherwise noted.

Connecticut—Ozone (1-Hour Standard)[2]

Designated area	Designation		Classification	
	Date [1]	Type	Date [1]	Type
Greater Connecticut Area:				
Fairfield County (part)	.....	Nonattainment	.....	Serious.
Shelton City				
Hartford County	.....	Nonattainment	.....	Serious.
Litchfield County (part)	.....	Nonattainment	.....	Serious.
all cities and townships except: Bridgewater Town, New Milford Town				
Middlesex County	.....	Nonattainment	.....	Serious.
New Haven County	.....	Nonattainment	.....	Serious.
New London County	.....	Nonattainment	.....	Serious.
Tolland County	.....	Nonattainment	.....	Serious.
Windham County	.....	Nonattainment	.....	Serious.
New York—N. New Jersey-Long Island Area:				
Fairfield County (part)	.....	Nonattainment	.....	Severe-17.
all cities and towns except Shelton City				
Litchfield County (part)	.....	Nonattainment	.....	Severe-17.
Bridgewater Town, New Milford Town				

[1] This date is November 15, 1990, unless otherwise noted.
[2] The 1-hour ozone standard is revoked effective June 15, 2005 for all areas in Connecticut.

Connecticut—PM–10

Designated Area	Designation		Classification	
	Date	Type	Date	Type
New Haven County				
City of New Haven	12/12/05	Attainment		
Rest of State	11/15/90	Unclassifiable		

Connecticut—NO_2 (1971 Annual Standard)

Designated area	Does not meet primary standards	Cannot be classified or better than national standards
AQCR 41	.....	X
AQCR 42	.....	X
AQCR 43	.....	X
AQCR 44	.....	X

Connecticut—NO_2 (2010 1-Hour Standard)

Designated area	Designation [a]	
	Date [1]	Type
State of Connecticut	.....	Unclassifiable/Attainment.

[a] Includes Indian Country located in each county or area, except as otherwise specified.
[1] This date is 90 days after October 31, 2011, unless otherwise noted.

Connecticut—Ozone (8-Hour Standard)

Designated area	Designation [a]		Category/classification	
	Date [1]	Type	Date [1]	Type
Greater Connecticut, CT:				
Hartford County	.....	Nonattainment	.....	Subpart 2/Moderate.
Litchfield County	.....	Nonattainment	.....	Subpart 2/Moderate.
New London County	.....	Nonattainment	.....	Subpart 2/Moderate.
Tolland County	.....	Nonattainment	.....	Subpart 2/Moderate.
Windham County	.....	Nonattainment	.....	Subpart 2/Moderate.
New York-N. New Jersey-Long Island, NY-NJ-CT:				
Fairfield County	.....	Nonattainment	.....	Subpart 2/Moderate.
Middlesex County	.....	Nonattainment	.....	Subpart 2/Moderate.
New Haven County	.....	Nonattainment	.....	Subpart 2/Moderate.

[a] Includes Indian Country located in each county or area, except as otherwise specified.
[1] This date is June 15, 2004, unless otherwise noted.

Connecticut—$PM_{2.5}$ (Annual NAAQS)

Designated area	Designation [a]	
	Date [1]	Type
New York-N. New Jersey-Long Island, NY-NJ-CT:		
Fairfield County		Nonattainment.
New Haven County		Nonattainment.
Rest of State:		
Hartford County		Unclassifiable/Attainment.
Litchfield County		Unclassifiable/Attainment.
Middlesex County		Unclassifiable/Attainment.
New London County		Unclassifiable/Attainment.
Tolland County		Unclassifiable/Attainment.
Windham County		Unclassifiable/Attainment.

[a] Includes Indian Country located in each county or area, except as otherwise specified.
[1] This date is 90 days after January 5, 2005, unless otherwise noted.

Connecticut—$PM_{2.5}$ [24-hour NAAQS]

Designated area	Designation for the 1997 NAAQS [a]		Designation for the 2006 NAAQS [a]	
	Date [1]	Type	Date [2]	Type
New York-N. New Jersey-Long Island, NY-NJ-CT:				
Fairfield County		Unclassifiable/Attainment.		Nonattainment.
New Haven County		Unclassifiable/Attainment.		Nonattainment.
Rest of State:				
Hartford County		Unclassifiable/Attainment.		Unclassifiable/Attainment.
Litchfield County		Unclassifiable/Attainment.		Unclassifiable/Attainment.
Middlesex County		Unclassifiable/Attainment.		Unclassifiable/Attainment.
New London County		Unclassifiable/Attainment.		Unclassifiable/Attainment.
Tolland County		Unclassifiable/Attainment.		Unclassifiable/Attainment.
Windham County		Unclassifiable/Attainment.		Unclassifiable/Attainment.

[a] Includes Indian Country located in each county or area, except as otherwise specified.
[1] This date is 90 days after January 5, 2005, unless otherwise noted
[2] This date is 30 days after November 13, 2009, unless otherwise noted.

Connecticut—2008 Lead NAAQS

Designated area	Designation for the 2008 NAAQS [a]	
	Date [1]	Type
Whole State		Unclassifiable/Attainment.

[a] Includes Indian Country located in each county or area, except as otherwise specified.
[1] December 31, 2011 unless otherwise noted.

[43 FR 8964, Mar. 3, 1978]

EDITORIAL NOTE: For FEDERAL REGISTER citations affecting § 81.307 see the List of CFR Sections Affected, which appears in the Finding Aids section of the printed volume and at *www.fdsys.gov*.

EFFECTIVE DATE NOTE: At 77 FR 30110, May 21, 2012, § 81.307 was amended by revising the table heading for ''Connecticut—Ozone (8-Hour Standard)'' to read ''Connecticut—1997 8-Hour Ozone NAAQS (Primary and Secondary)''; and by adding a new table entitled ''Connecticut—2008 8-Hour Ozone NAAQS (Primary and Secondary)'' following the newly designated table ''Connecticut—1997 8-Hour Ozone NAAQS (Primary and Secondary)'', effective July 20, 2012. For the convenience of the user, the added text is set forth as follows:

§ 81.307 Connecticut.

* * * * *

Connecticut—2008 8-Hour Ozone NAAQS (Primary and secondary)

Designated area	Designation		Classification	
	Date [1]	Type	Date [1]	Type
Greater Connecticut, CT: [2]	.....	Nonattainment	.....	Marginal.
Hartford County				
Litchfield County				
New London County				
Tolland County				
Windham County				
Mashantucket Pequot Tribe of Connecticut [3]				
Mohegan Indian Tribe of Connecticut [3]				
New York-N. New Jersey-Long Island NY-NJ-CT: [2]	.....	Nonattainment	.....	Marginal.
Fairfield County				
Middlesex County				
New Haven County				

[1] This date is July 20, 2012, unless otherwise noted.
[2] Excludes Indian country located in each area, unless otherwise noted.
[3] Includes Indian country of the tribe listed in this table located in the identified area. Information pertaining to areas of Indian country in this table is intended for CAA planning purposes only and is not an EPA determination of Indian country status or any Indian country boundary. EPA lacks the authority to establish Indian country land status, and is making no determination of Indian country boundaries, in this table.

* * * * *

§ 81.308 Delaware.

Delaware—TSP

Designated area	Does not meet primary standards	Does not meet secondary standards	Cannot be classified	Better than national standards
City of Wilmington	.....	.....	X	
Section within City of Newark bounded by: College Avenue, CONRAIL tracks, South Chapel Street and Chestnut Hill Road	.....	.....	X	
Remainder of New Castle County	.....	.....	.....	X
Kent County	.....	.....	.....	X
Sussex County	.....	.....	.....	X

Delaware—SO_2

Designated area	Does not meet primary standards	Does not meet secondary standards	Cannot be classified	Better than national standards
New Castle County	.....	.....	.....	X
Kent County	.....	.....	.....	X
Sussex County	.....	.....	.....	X

Delaware—Carbon Monoxide

Designated Area	Designation		Classification	
	Date [1]	Type	Date [1]	Type
Kent County	.....	Unclassifiable/Attainment		
New Castle County	.....	Unclassifiable/Attainment		
Sussex County	.....	Unclassifiable/Attainment		

[1] This date is November 15, 1990, unless otherwise noted.

DELAWARE—OZONE (1-HOUR STANDARD)[3]

Designated area	Designation		Classification	
	Date [1]	Type	Date [1]	Type
Philadelphia-Wilmington-Trenton Area:				
Kent County	.....	Nonattainment	.....	Severe-15.
New Castle County	.....	Nonattainment	.....	Severe-15.
Sussex County Area:				
Sussex County	([2])	Nonattainment	([2])	Marginal.

[1] This date is November 15, 1990, unless otherwise noted.

[2] This date is October 18, 2000.
[3] The 1-hour ozone standard is revoked effective June 15, 2005 for all areas in Delaware.

NO_2 (1971 Annual Standard)

Designated area	Does not meet primary standards	Cannot be classified or better than national standards
New Castle County		X
Kent County		X
Sussex County		X

Delaware—NO_2 (2010 1-Hour Standard)

Designated area	Designation [a]	
	Date [1]	Type
Kent County		Unclassifiable/Attainment.
New Castle County		Unclassifiable/Attainment.
Sussex County		Unclassifiable/Attainment.

[a] Includes Indian Country located in each county or area, except as otherwise specified.
[1] This date is 90 days after October 31, 2011, unless otherwise noted.

Delaware—Ozone (8-Hour Standard)

Designated area	Designation [a]		Category/classification	
	Date [1]	Type	Date [1]	Type
Philadelphia-Wilmington-Atlantic Ci, PA-NJ-MD-DE:				
Kent County		Nonattainment		Subpart 2/Moderate.[2]
New Castle County		Nonattainment		Subpart 2/Moderate.[2]
Sussex County		Nonattainment		Subpart 2/Moderate.[2]

[a] Includes Indian Country located in each county or area, except as otherwise specified.
[a] Includes Indian Country located in each county or area, except as otherwise specified.
[1] This date is June 15, 2004, unless otherwise noted.

Delaware—$PM_{2.5}$ (Annual NAAQS)

Designated area	Designation [a]	
	Date [1]	Type
Philadelphia-Wilmington, PA-NJ-DE:		
New Castle County		Nonattainment.
Southern Delaware Intrastate AQCR:		
Kent County		Unclassifiable/Attainment.
Sussex County		Unclassifiable/Attainment.

[a] Includes Indian Country located in each county or area, except as otherwise specified.
[1] This date is 90 days after January 5, 2005, unless otherwise noted.

Delaware—$PM_{2.5}$ [24-hour NAAQS]

Designated area	Designation for the 1997 NAAQS [a]		Designation for the 2006 NAAQS [a]	
	Date [1]	Type	Date [2]	Type
Philadelphia-Wilmington, PA-NJ-DE:				
New Castle County		Unclassifiable/Attainment.		Nonattainment.
Southern Delaware Intrastate AQCR:				
Kent County		Unclassifiable/Attainment.		Unclassifiable/Attainment.
Sussex County		Unclassifiable/Attainment.		Unclassifiable/Attainment.

[a] Includes Indian Country located in each county or area, except as otherwise specified.
[1] This date is 90 days after January 5, 2005, unless otherwise noted.
[2] This date is 30 days after November 13, 2009, unless otherwise noted.

Delaware—2008 Lead NAAQS

Designated area	Designation for the 2008 NAAQS [a]	
	Date [1]	Type
Whole State		Unclassifiable/Attainment.

[a] Includes Indian Country located in each county or area, except as otherwise specified.
[1] December 31, 2011 unless otherwise noted.

[43 FR 40505, Sept. 12, 1978, as amended at 47 FR 31878, July 23, 1982; 56 FR 56738, Nov. 6, 1991; 63 FR 31035, June 5, 1998; 65 FR 45215, July 20, 2000; 69 FR 23892, Apr. 30, 2004; 70 FR 963, Jan. 5, 2005; 70 FR 44475, Aug. 3, 2005; 76 FR 3842, Jan. 21, 2011; 76 FR 72106, Nov. 22, 2011; 77 FR 9547, Feb. 17, 2012]

EFFECTIVE DATE NOTE: At 77 FR 30111, May 21, 2012, § 81.308 was amended by revising the table heading for ''Delaware—Ozone (8-Hour Standard)'' to read ''Delaware—1997 8-Hour Ozone NAAQS (Primary and Secondary)''; by adding a new table entitled ''Delaware—2008 8-Hour Ozone NAAQS (Primary and Secondary)'' following the newly designated table ''Delaware—1997 8-Hour Ozone NAAQS (Primary and Secondary)'', effective July 20, 2012. For the convenience of the user, the added text is set forth as follows:

§ 81.308 Delaware.

* * * * *

Delaware—2008 8-Hour Ozone NAAQS (Primary and secondary)

Designated area	Designation		Classification	
	Date [1]	Type	Date [1]	Type
Philadelphia-Wilmington-Atlantic City, PA-NJ-MD-DE: [2]				
New Castle County		Nonattainment		Marginal.
Seaford: [2]				
Sussex County		Nonattainment		Marginal.
Rest of State: [3]				
Southern Delaware Intrastate AQCR: (remainder)				
Kent County		Unclassifiable/Attainment		

[1] This date is July 20, 2012, unless otherwise noted.
[2] Excludes Indian country located in each area, unless otherwise noted.
[3] Includes any Indian country in each county or area, unless otherwise specified.

* * * * *

§ 81.309 District of Columbia.

District of Columbia—TSP

Designated area	Does not meet primary standards	Does not meet secondary standards	Cannot be classified	Better than national standards
1. Area bounded by: East Capitol Street S.E., District Line (Southern Avenue S.E.), Eastern Shore of Potomac River and Eastern Shore of Anacostia River				X
2. Area bounded by: Francis Scott Key Bridge, M Street, N.W., 23rd Street N.W., Florida Avenue N.W., U Street N.W., Florida Avenue N.W.-N.E., 4th Street N.E.-S.E. Southeast-Southwest Freeway (I295, I395), 15th Street S.W.-N.W., Constitution Avenue N.W., Theodore Roosevelt Memorial Bridge, Potomac River				X
3. Remainder of the District of Columbia portion of the National Capital Interstate AQCR				X

District of Columbia—SO_2

Designated area	Does not meet primary standards	Does not meet secondary standards	Cannot be classified	Better than national standards
National Capital Interstate AQCR—District of Columbia portion ..	.....	.....	.....	X

District of Columbia-Carbon Monoxide

Designated area	Designation		Classification	
	Date [1]	Type	Date [1]	Type
Washington Area:				
Washington Entire Area.	.....	Attainment		

[1] This date is November 15, 1990, unless otherwise noted.

District of Columbia—Ozone (1-Hour Standard)[2]

Designated area	Designation		Classification	
	Date [1]	Type	Date [1]	Type
Washington Area: Washington Entire Area	.....	Nonattainment	3/25/03	Severe

[1] This date is November 15, 1990, unless otherwise noted.
[2] The 1-hour ozone standard is revoked effective June 15, 2005 for all areas in the District of Columbia.

District of Columbia—NO_2 (1971 Annual Standard)

Designated area	Does not meet primary standards	Cannot be classified or better than national standards
National Capital Interstate AQCR—District of Columbia portion	.....	X

District of Columbia—NO_2 (2010 1-Hour Standard)

Designated area	Designation [a]	
	Date [1]	Type
District of Columbia	.....	Unclassifiable/Attainment.

[a] Includes Indian Country located in each county or area, except as otherwise specified.
[1] This date is 90 days after October 31, 2011, unless otherwise noted.

District of Columbia—Ozone (8-Hour Standard)

Designated area	Designation [a]		Category/classification	
	Date [1]	Type	Date [1]	Type
Washington, DC-MD-VA:				
District of Columbia	.....	Nonattainment	.....	Subpart 2/Moderate.

[a] Includes Indian Country located in each county or area, except as otherwise specified.
[1] This date is June 15, 2004, unless otherwise noted.

District of Columbia—$PM_{2.5}$ (Annual NAAQS)

Designated area	Designation [a]	
	Date [1]	Type
Washington, DC-MD-VA:		
District of Columbia	.....	Nonattainment.

[a] Includes Indian Country located in each county or area, except as otherwise specified.
[1] This date is 90 days after January 5, 2005, unless otherwise noted.

District of Columbia—$PM_{2.5}$ [24-hour NAAQS]

Designated area	Designation for the 1997 NAAQS [a]		Designation for the 2006 NAAQS [a]	
	Date [1]	Type	Date [2]	Type
AQCR 047 National Capital Interstate (DC–MD–VA) (part)				

District of Columbia—$PM_{2.5}$ [24-hour NAAQS]

Designated area	Designation for the 1997 NAAQS [a]		Designation for the 2006 NAAQS [a]	
	Date [1]	Type	Date [2]	Type
District of Columbia		Unclassifiable/Attainment.		Unclassifiable/Attainment.

[a] Includes Indian Country located in each county or area, except as otherwise specified.
[1] This date is 90 days after January 5, 2005, unless otherwise noted.
[2] This date is 30 days after November 13, 2009, unless otherwise noted.

District of Columbia—2008 Lead NAAQS

Designated area	Designation for the 2008 NAAQS [a]	
	Date [1]	Type
Whole State		Unclassifiable/Attainment.

[a] Includes Indian Country located in each county or area, except as otherwise specified.
[1] December 31, 2011 unless otherwise noted.

[43 FR 40507, Sept. 12, 1978, as amended at 46 FR 48929, Oct. 5, 1981; 47 FR 31878, July 23, 1982; 56 FR 56738, Nov. 6, 1991; 61 FR 2937, Jan. 30, 1996; 63 FR 31035, June 5, 1998; 65 FR 45216, July 20, 2000; 68 FR 3424, Jan. 24, 2003; 69 FR 23893, Apr. 30, 2004; 70 FR 963, Jan. 5, 2005; 70 FR 44475, Aug. 3, 2005; 74 FR 58720, Nov. 13, 2009; 76 FR 72107, Nov. 22, 2011; 77 FR 9547, Feb. 17, 2012]

EFFECTIVE DATE NOTE: At 77 FR 30111, May 21, 2012, § 81.309 was amended by revising the table heading for ''District of Columbia—Ozone (8-Hour Standard)'' to read ''District of Columbia—1997 8-Hour Ozone NAAQS (Primary and Secondary)''; adding a new table entitled ''District of Columbia—2008 8-Hour Ozone NAAQS (Primary and Secondary)'' following the newly designated table ''District of Columbia—1997 8-Hour Ozone NAAQS (Primary and Secondary)'', effective July 20, 2012. For the convenience of the user, the added text is set forth as follows:

§ 81.309 District of Columbia.

* * * * *

District of Columbia—2008 8-Hour Ozone NAAQS (Primary and secondary)

Designated area	Designation		Classification	
	Date [1]	Type	Date [1]	Type
Washington, DC-MD-VA: District of Columbia [2]		Nonattainment		Marginal.

[1] This date is July 20, 2012, unless otherwise noted.
[2] Excludes Indian country located in each area, unless otherwise noted.

* * * * *

§ 81.310 Florida.

Florida—TSP

Designated area—does not meet primary standards	Does not meet secondary standard	Cannot be classified	Better than national standards
The downtown Jacksonville area located south and then west along the St. John's River from its confluence with Long Branch Creek, to Main Street north along Main Street to Eighth Street; east along Evergreen Avenue to Long Branch Creek; and east along Long Branch Creek to the St. John's River.		X	
Seminole County		X [1]	
Polk County		X [1]	
That portion of Hillsborough County which falls within the area of the circle having a centerpoint at the intersection of US 41 and State Road 60 and a radius of 12 km.		X	
Rest of State			X [1]

[1] EPA designation only.

Florida—SO_2

Designated area	Does not meet primary standards	Does not meet secondary standards	Cannot be classified	Better than national standards
Duvall County				X
The SW Corner of Pasco County			[1] X	
Hillsborough County			[1] X	
Escambia County			[1] X	
Rest of State				[1] X

[1] EPA designation only.

Florida—Carbon Monoxide

Designated Area	Designation		Classification	
	Date [1]	Type	Date [1]	Type
Statewide		Unclassifiable/Attainment		
Alachua County				
Baker County				
Bay County				
Bradford County				
Brevard County				
Broward County				
Calhoun County				
Charlotte County				
Citrus County				
Clay County				
Collier County				
Columbia County				
Dade County				
De Soto County				
Dixie County				
Duval County				
Escambia County				
Flagler County				
Franklin County				
Gadsden County				
Gilchrist County				
Glades County				
Gulf County				
Hamilton County				
Hardee County				
Hendry County				
Hernando County				
Highlands County				
Hillsborough County				
Holmes County				
Indian River County				
Jackson County				
Jefferson County				
Lafayette County				
Lake County				
Lee County				
Leon County				
Levy County				
Liberty County				
Madison County				
Manatee County				
Marion County				
Martin County				
Monroe County				
Nassau County				
Okaloosa County				
Okeechobee County				
Orange County				
Osceola County				
Palm Beach County				
Pasco County				
Pinellas County				
Polk County				
Putnam County				
Santa Rosa County				
Sarasota County				

Florida—Carbon Monoxide

Designated Area	Designation		Classification	
	Date [1]	Type	Date [1]	Type
Seminole County				
St. Johns County				
St. Lucie County				
Sumter County				
Suwannee County				
Taylor County				
Union County				
Volusia County				
Wakulla County				
Walton County				
Washington County				

[1] This date is November 15, 1990, unless otherwise noted.

Florida—Ozone (1-Hour Standard)[2]

Designated area	Designation		Classification	
	Date [1]	Type	Date [1]	Type
Statewide		Unclassifiable/Attainment		
Alachua County				
Baker County				
Bay County				
Bradford County				
Brevard County				
Broward County				
Calhoun County				
Charlotte County				
Citrus County				
Clay County				
Collier County				
Columbia County				
Dade County				
De Soto County				
Dixie County				
Duval County				
Escambia County				
Flagler County				
Franklin County				
Gadsden County				
Gilchrist County				
Glades County				
Gulf County				
Hamilton County				
Hardee County				
Hendry County				
Hernando County				
Highlands County				
Hillsborough County				
Holmes County				
Indian River County				
Jackson County				
Jefferson County				
Lafayette County				
Lake County				
Lee County				
Leon County				
Levy County				
Liberty County				
Madison County				
Manatee County				
Marion County				
Martin County				
Monroe County				
Nassau County				
Okaloosa County				
Okeechobee County				
Orange County				
Osceola County				
Palm Beach County				

Florida—Ozone (1-Hour Standard)[2]

Designated area	Designation		Classification	
	Date [1]	Type	Date [1]	Type
Pasco County				
Pinellas County				
Polk County				
Putnam County				
Santa Rosa County				
Sarasota County				
Seminole County				
St. Johns County				
St. Lucie County				
Sumter County				
Suwannee County				
Taylor County				
Union County				
Volusia County				
Wakulla County				
Walton County				
Washington County				

[1] This date is October 18, 2000, unless otherwise noted.
[2] The 1-hour ozone standard is revoked effective June 15, 2005 for all areas in Florida. The Jacksonville, Miami-Fort Lauderdale-W. Palm Beach, and Tampa-St. Petersburg-Clearwater areas are maintenance areas for the 1-hour NAAQS for purposes of 40 CFR part 51 subpart X.

Florida—NO_2 (1971 Annual Standard)

Designated area	Does not meet primary standards	Cannot be classified or better than national standards
Statewide		[1] X

[1] EPA designation only.

Florida—NO_2 (2010 1-Hour Standard)

Designated area	Designation [a]	
	Date [1]	Type
State of Florida		Unclassifiable/Attainment.

[a] Includes Indian Country located in each county or area, except as otherwise specified.
[1] This date is 90 days after October 31, 2011, unless otherwise noted.

Florida—Ozone (8-Hour Standard)

Designated area	Designation [a]		Category/classification	
	Date [1]	Type	Date [1]	Type
Statewide		Unclassifiable/Attainment		
Alachua County				
Baker County				
Bay County				
Bradford County				
Brevard County				
Broward County				
Calhoun County				
Charlotte County				
Citrus County				
Clay County				
Collier County				
Columbia County				
DeSoto County				
Dixie County				
Duval County				
Escambia County				
Flagler County				
Franklin County				
Gadsden County				
Gilchrist County				
Glades County				
Gulf County				
Hamilton County				
Hardee County				

Florida—Ozone (8-Hour Standard)

Designated area	Designation [a]		Category/classification	
	Date [1]	Type	Date [1]	Type
Hendry County				
Hernando County				
Highlands County				
Hillsborough County				
Holmes County				
Indian River County				
Jackson County				
Jefferson County				
Lafayette County				
Lake County				
Lee County				
Leon County				
Levy County				
Liberty County				
Madison County				
Manatee County				
Marion County				
Martin County				
Miami-Dade County				
Monroe County				
Nassau County				
Okaloosa County				
Okeechobee County				
Orange County				
Osceola County				
Palm Beach County				
Pasco County				
Pinellas County				
Polk County				
Putnam County				
St. Johns County				
St. Lucie County				
Santa Rosa County				
Sarasota County				
Seminole County				
Sumter County				
Suwannee County				
Taylor County				
Union County				
Volusia County				
Wakulla County				
Walton County				
Washington County				

[a] Includes Indian Country located in each county or area, except as otherwise specified.
[1] This date is June 15, 2004, unless otherwise noted.

Florida—$PM_{2.5}$ (Annual NAAQS)

Designated area	Designation [a]	
	Date [1]	Type
Statewide:		
Alachua County		Unclassifiable/Attainment.
Baker County		Unclassifiable/Attainment.
Bay County		Unclassifiable/Attainment.
Bradford County		Unclassifiable/Attainment.
Brevard County		Unclassifiable/Attainment.
Broward County		Unclassifiable/Attainment.
Calhoun County		Unclassifiable/Attainment.
Charlotte County		Unclassifiable/Attainment.
Citrus County		Unclassifiable/Attainment.
Clay County		Unclassifiable/Attainment.
Collier County		Unclassifiable/Attainment.
Columbia County		Unclassifiable/Attainment.
DeSoto County		Unclassifiable/Attainment.
Dixie County		Unclassifiable/Attainment.
Duval County		Unclassifiable/Attainment.
Escambia County		Unclassifiable/Attainment.
Flagler County		Unclassifiable/Attainment.
Franklin County		Unclassifiable/Attainment.

Florida—$PM_{2.5}$ (Annual NAAQS)

Designated area	Designation [a]	
	Date [1]	Type
Gadsden County		Unclassifiable/Attainment.
Gilchrist County		Unclassifiable/Attainment.
Glades County		Unclassifiable/Attainment.
Gulf County		Unclassifiable/Attainment.
Hamilton County		Unclassifiable/Attainment.
Hardee County		Unclassifiable/Attainment.
Hendry County		Unclassifiable/Attainment.
Hernando County		Unclassifiable/Attainment.
Highlands County		Unclassifiable/Attainment.
Hillsborough County		Unclassifiable/Attainment.
Holmes County		Unclassifiable/Attainment.
Indian River County		Unclassifiable/Attainment.
Jackson County		Unclassifiable/Attainment.
Jefferson County		Unclassifiable/Attainment.
Lafayette County		Unclassifiable/Attainment.
Lake County		Unclassifiable/Attainment.
Lee County		Unclassifiable/Attainment.
Leon County		Unclassifiable/Attainment.
Levy County		Unclassifiable/Attainment.
Liberty County		Unclassifiable/Attainment.
Madison County		Unclassifiable/Attainment.
Manatee County		Unclassifiable/Attainment.
Marion County		Unclassifiable/Attainment.
Martin County		Unclassifiable/Attainment.
Miami-Dade County		Unclassifiable/Attainment.
Monroe County		Unclassifiable/Attainment.
Nassau County		Unclassifiable/Attainment.
Okaloosa County		Unclassifiable/Attainment.
Okeechobee County		Unclassifiable/Attainment.
Orange County		Unclassifiable/Attainment.
Osceola County		Unclassifiable/Attainment.
Palm Beach County		Unclassifiable/Attainment.
Pasco County		Unclassifiable/Attainment.
Pinellas County		Unclassifiable/Attainment.
Polk County		Unclassifiable/Attainment.
Putnam County		Unclassifiable/Attainment.
St. Johns County		Unclassifiable/Attainment.
St. Lucie County		Unclassifiable/Attainment.
Santa Rosa County		Unclassifiable/Attainment.
Sarasota County		Unclassifiable/Attainment.
Seminole County		Unclassifiable/Attainment.
Sumter County		Unclassifiable/Attainment.
Suwannee County		Unclassifiable/Attainment.
Taylor County		Unclassifiable/Attainment.
Union County		Unclassifiable/Attainment.
Volusia County		Unclassifiable/Attainment.
Wakulla County		Unclassifiable/Attainment.
Walton County		Unclassifiable/Attainment.
Washington County		Unclassifiable/Attainment.

[a] Includes Indian Country located in each county or area, except as otherwise specified.
[1] This date is 90 days after January 5, 2005, unless otherwise noted.

Florida—$PM_{2.5}$ [24-hour NAAQS]

Designated area	Designation for the 1997 NAAQS [a]		Designation for the 2006 NAAQS [a]	
	Date [1]	Type	Date [2]	Type
Statewide:				
Alachua County		Unclassifiable/Attainment.		Unclassifiable/Attainment.
Baker County		Unclassifiable/Attainment.		Unclassifiable/Attainment.
Bay County		Unclassifiable/Attainment.		Unclassifiable/Attainment.
Bradford County		Unclassifiable/Attainment.		Unclassifiable/Attainment.
Brevard County		Unclassifiable/Attainment.		Unclassifiable/Attainment.
Broward County		Unclassifiable/Attainment.		Unclassifiable/Attainment.

Florida—$PM_{2.5}$ [24-hour NAAQS]

Designated area	Designation for the 1997 NAAQS [a]		Designation for the 2006 NAAQS [a]	
	Date [1]	Type	Date [2]	Type
Calhoun County		Unclassifiable/Attainment.		Unclassifiable/Attainment.
Charlotte County		Unclassifiable/Attainment.		Unclassifiable/Attainment.
Citrus County		Unclassifiable/Attainment.		Unclassifiable/Attainment.
Clay County		Unclassifiable/Attainment.		Unclassifiable/Attainment.
Collier County		Unclassifiable/Attainment.		Unclassifiable/Attainment.
Columbia County		Unclassifiable/Attainment.		Unclassifiable/Attainment.
DeSoto County		Unclassifiable/Attainment.		Unclassifiable/Attainment.
Dixie County		Unclassifiable/Attainment.		Unclassifiable/Attainment.
Duval County		Unclassifiable/Attainment.		Unclassifiable/Attainment.
Escambia County		Unclassifiable/Attainment.		Unclassifiable/Attainment.
Flagler County		Unclassifiable/Attainment.		Unclassifiable/Attainment.
Franklin County		Unclassifiable/Attainment.		Unclassifiable/Attainment.
Gadsden County		Unclassifiable/Attainment.		Unclassifiable/Attainment.
Gilchrist County		Unclassifiable/Attainment.		Unclassifiable/Attainment.
Glades County		Unclassifiable/Attainment.		Unclassifiable/Attainment.
Gulf County		Unclassifiable/Attainment.		Unclassifiable/Attainment.
Hamilton County		Unclassifiable/Attainment.		Unclassifiable/Attainment.
Hardee County		Unclassifiable/Attainment.		Unclassifiable/Attainment.
Hendry County		Unclassifiable/Attainment.		Unclassifiable/Attainment.
Hernando County		Unclassifiable/Attainment.		Unclassifiable/Attainment.
Highlands County		Unclassifiable/Attainment.		Unclassifiable/Attainment.
Hillsborough County		Unclassifiable/Attainment.		Unclassifiable/Attainment.
Holmes County		Unclassifiable/Attainment.		Unclassifiable/Attainment.
Indian River County		Unclassifiable/Attainment.		Unclassifiable/Attainment.
Jackson County		Unclassifiable/Attainment.		Unclassifiable/Attainment.
Jefferson County		Unclassifiable/Attainment.		Unclassifiable/Attainment.
Lafayette County		Unclassifiable/Attainment.		Unclassifiable/Attainment.
Lake County		Unclassifiable/Attainment.		Unclassifiable/Attainment.
Lee County		Unclassifiable/Attainment.		Unclassifiable/Attainment.
Leon County		Unclassifiable/Attainment.		Unclassifiable/Attainment.
Levy County		Unclassifiable/Attainment.		Unclassifiable/Attainment.
Liberty County		Unclassifiable/Attainment.		Unclassifiable/Attainment.
Madison County		Unclassifiable/Attainment.		Unclassifiable/Attainment.
Manatee County		Unclassifiable/Attainment.		Unclassifiable/Attainment.
Marion County		Unclassifiable/Attainment.		Unclassifiable/Attainment.

Florida—$PM_{2.5}$ [24-hour NAAQS]

Designated area	Designation for the 1997 NAAQS [a]		Designation for the 2006 NAAQS [a]	
	Date [1]	Type	Date [2]	Type
Martin County		Unclassifiable/Attainment.		Unclassifiable/Attainment.
Miami-Dade County		Unclassifiable/Attainment.		Unclassifiable/Attainment.
Monroe County		Unclassifiable/Attainment.		Unclassifiable/Attainment.
Nassau County		Unclassifiable/Attainment.		Unclassifiable/Attainment.
Okaloosa County		Unclassifiable/Attainment.		Unclassifiable/Attainment.
Okeechobee County		Unclassifiable/Attainment.		Unclassifiable/Attainment.
Orange County		Unclassifiable/Attainment.		Unclassifiable/Attainment.
Osceola County		Unclassifiable/Attainment.		Unclassifiable/Attainment.
Palm Beach County		Unclassifiable/Attainment.		Unclassifiable/Attainment.
Pasco County		Unclassifiable/Attainment.		Unclassifiable/Attainment.
Pinellas County		Unclassifiable/Attainment.		Unclassifiable/Attainment.
Polk County		Unclassifiable/Attainment.		Unclassifiable/Attainment.
Putnam County		Unclassifiable/Attainment.		Unclassifiable/Attainment.
St. Johns County		Unclassifiable/Attainment.		Unclassifiable/Attainment.
St. Lucie County		Unclassifiable/Attainment.		Unclassifiable/Attainment.
Santa Rosa County		Unclassifiable/Attainment.		Unclassifiable/Attainment.
Sarasota County		Unclassifiable/Attainment.		Unclassifiable/Attainment.
Seminole County		Unclassifiable/Attainment.		Unclassifiable/Attainment.
Sumter County		Unclassifiable/Attainment.		Unclassifiable/Attainment.
Suwannee County		Unclassifiable/Attainment.		Unclassifiable/Attainment.
Taylor County		Unclassifiable/Attainment.		Unclassifiable/Attainment.
Union County		Unclassifiable/Attainment.		Unclassifiable/Attainment.
Volusia County		Unclassifiable/Attainment.		Unclassifiable/Attainment.
Wakulla County		Unclassifiable/Attainment.		Unclassifiable/Attainment.
Walton County		Unclassifiable/Attainment.		Unclassifiable/Attainment.
Washington County		Unclassifiable/Attainment.		Unclassifiable/Attainment.

[a] Includes Indian Country located in each county or area, except as otherwise specified.
[1] This date is 90 days after January 5, 2005, unless otherwise noted.
[2] This date is 30 days after November 13, 2009, unless otherwise noted.

Florida—1978 Lead NAAQS

Designated area	Designation		Classification	
	Date	Type	Date	Type
Hillsborough County (part) The area encompassed within a radius of (5) kilometers centered at UTM coordinates: 364.0 East, 3093.5 North, zone 17 (in city of Tampa).	1/6/92	Unclassifiable		
Rest of State Not Designated.				

Florida—2008 Lead NAAQS

Designated area	Designation for the 2008 NAAQS [a]	
	Date [1]	Type
Tampa, FL:		
Hillsborough County (part)	12/31/10	Nonattainment.
Area is located within a 1.5 km radius centered at UTM coordinates 364104 meters E, 3093830 meters N, Zone 17, which surrounds the EnviroFocus Technologies facility.		
Rest of State		Unclassifiable/Attainment.

[a] Includes Indian Country located in each county or area, except as otherwise specified.
[1] December 31, 2011 unless otherwise noted.

[43 FR 8964, Mar. 3, 1978]

EDITORIAL NOTE: For FEDERAL REGISTER citations affecting §81.310 see the List of CFR Sections Affected, which appears in the Finding Aids section of the printed volume and at *www.fdsys.gov*.

EFFECTIVE DATE NOTE: At 77 FR 30112, May 21, 2012, §81.310 was amended by revising the table heading for ''Florida—Ozone (8-Hour Standard)'' to read ''Florida—1997 8-Hour Ozone NAAQS (Primary and Secondary)''; adding a new table entitled ''Florida—2008 8-Hour Ozone NAAQS (Primary and Secondary)'' following the newly designated table ''Florida—1997 8-Hour Ozone NAAQS (Primary and Secondary)'', effective July 20, 2012. For the convenience of the user, the added text is set forth as follows:

§81.310 Florida.

* * * * *

Florida—2008 8-Hour Ozone NAAQS (Primary and secondary)

Designated area	Designation		Classification	
	Date [1]	Type	Date [1]	Type
Statewide: [2]		Unclassifiable/Attainment		
Alachua County				
Baker County				
Bay County				
Bradford County				
Brevard County				
Broward County				
Calhoun County				
Charlotte County				
Citrus County				
Clay County				
Collier County				
Columbia County				
DeSoto County				
Dixie County				
Duval County				
Escambia County				
Flagler County				
Franklin County				
Gadsden County				
Gilchrist County				
Glades County				
Gulf County				
Hamilton County				
Hardee County				
Hendry County				
Hernando County				
Highlands County				
Hillsborough County				
Holmes County				
Indian River County				
Jackson County				
Jefferson County				
Lafayette County				
Lake County				
Lee County				
Leon County				

Florida—2008 8-Hour Ozone NAAQS (Primary and secondary)

Designated area	Designation		Classification	
	Date [1]	Type	Date [1]	Type
Levy County				
Liberty County				
Madison County				
Manatee County				
Marion County				
Martin County				
Miami-Dade County				
Monroe County				
Nassau County				
Okaloosa County				
Okeechobee County				
Orange County				
Osceola County				
Palm Beach County				
Pasco County				
Pinellas County				
Polk County				
Putnam County				
St. Johns County				
St. Lucie County				
Santa Rosa County				
Sarasota County				
Seminole County				
Sumter County				
Suwannee County				
Taylor County				
Union County				
Volusia County				
Wakulla County				
Walton County				
Washington County				

[1] This date is July 20, 2012, unless otherwise noted.
[2] Includes any Indian country located in each county or area, unless otherwise noted.

* * * * *

§ 81.311 Georgia.

Georgia—TSP

Designated area	Does not meet primary standards	Does not meet secondary standards	Cannot be classified	Better than national standards
Appling County				X
Atkinson County				X
Bacon County				X
Baker County				X
Baldwin County				X
Banks County				X
Barrow County				X
Bartow County				X
Ben Hill County				X
Berrien County				X
Bibb County				X
Bleckley County				X
Brantley County				X
Brooks County				X
Bryan County				X
Bulloch County				X
Burke County				X
Butts County				X
Calhoun County				X
Camden County				X
Candler County				X
Carroll County				X
Catoosa County				X
Charlton County				X
That portion of Chatham County within 0.25 mile of the West Lathrop and Augusta monitoring site in Savannah*			X	

Georgia—TSP

Designated area	Does not meet primary standards	Does not meet secondary standards	Cannot be classified	Better than national standards
Rest of Chatham County				X
Chattahoochee County				X
Chattooga County				X
Cherokee County				X
Clarke County				X
Clay County				X
Clayton County				X
Clinch County				X
Cobb County				X
Coffee County				X
Colquitt County				X
Columbia County				X
Cook County				X
Coweta County				X
Crawford County				X
Crisp County				X
Dade County				X
Dawson County				X
Decatur County				X
DeKalb County				X
Dodge County				X
Dooly County				X
Dougherty County				X
Douglas County				X
Early County				X
Echols County				X
Effingham County				X
Elbert County				X
Emanuel County				X
Evans County				X
Fannin County				X
Fayette County				X
Floyd County				X
Forsyth County				X
Franklin County				X
Fulton County				X
Gilmer County				X
Glascock County				X
Glynn County				X
Gordon County				X
Grady County				X
Greene County				X
Gwinnett County				X
Habersham County				X
Hall County				X
Hancock County				X
Haralson County				X
Harris County				X
Hart County				X
Heard County				X
Henry County				X
Houston County				X
Irwin County				X
Jackson County				X
Jasper County				X
Jeff Davis County				X
Jefferson County				X
Jenkins County				X
Johnson County				X
Jones County				X
Lamar County				X
Lanier County				X
Laurens County				X
Lee County				X
Liberty County				X
Lincoln County				X
Long County				X
Lowndes County				X
Lumpkin County				X
McDuffie County				X

Georgia—TSP

Designated area	Does not meet primary standards	Does not meet secondary standards	Cannot be classified	Better than national standards
McIntosh County				X
Macon County				X
Madison County				X
Marion County				X
Meriwether County				X
Miller County				X
Mitchell County				X
Monroe County				X
Montgomery County				X
Morgan County				X
Murray County				X
Muscogee County				X
Newton County				X
Oconee County				X
Oglethorpe County				X
Paulding County				X
Peach County				X
Pickens County				X
Pierce County				X
Pike County				X
Polk County				X
Paulaski County				X
Putnam County				X
Quitman County				X
Rabun County				X
Randolph County				X
Richmond County				X
Rockdale County				X
Schley County				X
Screven County				X
Seminole County				X
Spalding County				X
Stephens County				X
Stewart County				X
Sumter County				X
Talbot County				X
Taliaferro County				X
Tattnall County				X
Taylor County				X
Telfair County				X
Terrell County				X
Thomas County				X
Tift County				X
Toombs County				X
Towns County				X
Treutlen County				X
Troup County				X
Turner County				X
Twiggs County				X
Union County				X
Upson County				X
Walker County				X
Walton County				X
Ware County				X
Warren County				X
Washington County				X
Wayne County				X
Webster County				X
Wheeler County				X
White County				X
Whitfield County				X
Wilcox County				X
Wilkes County				X
Wilkinson County				X
Worth County				X

Georgia—SO_2

Designated area	Does not meet primary standards	Does not meet secondary standards	Cannot be classified	Better than national standards
Appling County				X
Atkinson County				X
Bacon County				X
Baker County				X
Baldwin County				X
Banks County				X
Barrow County				X
Bartow County				X
Ben Hill County				X
Berrien County				X
Bibb County				X
Bleckley County				X
Brantley County				X
Brooks County				X
Bryan County				X
Bulloch County				X
Burke County				X
Butts County				X
Calhoun County				X
Camden County				X
Candler County				X
Carroll County				X
Catoosa County				X
Charlton County				X
Chatham County				X
Chattahoochee County				X
Chattooga County				X
Cherokee County				X
Clarke County				X
Clay County				X
Clayton County				X
Clinch County				X
Cobb County				X
Coffee County				X
Colquitt County				X
Columbia County				X
Cook County				X
Coweta County				X
Crawford County				X
Crisp County				X
Dade County				X
Dawson County				X
Decatur County				X
DeKalb County				X
Dodge County				X
Dooly County				X
Dougherty County				X
Douglas County				X
Early County				X
Echols County				X
Effingham County				X
Elbert County				X
Emanuel County				X
Evans County				X
Fannin County				X
Fayette County				X
Floyd County				X
Forsyth County				X
Franklin County				X
Fulton County				X
Gilmer County				X
Glascock County				X
Glynn County				X
Gordon County				X
Grady County				X
Greene County				X
Gwinnett County				X
Habersham County				X
Hall County				X
Hancock County				X

Georgia—SO_2

Designated area	Does not meet primary standards	Does not meet secondary standards	Cannot be classified	Better than national standards
Haralson County				X
Harris County				X
Hart County				X
Heard County				X
Henry County				X
Houston County				X
Irwin County				X
Jackson County				X
Jasper County				X
Jeff Davis County				X
Jefferson County				X
Jenkins County				X
Johnson County				X
Jones County				X
Lamar County				X
Lanier County				X
Laurens County				X
Lee County				X
Liberty County				X
Lincoln County				X
Long County				X
Lowndes County				X
Lumpkin County				X
McDuffie County				X
McIntosh County				X
Macon County				X
Madison County				X
Marion County				X
Meriwether County				X
Miller County				X
Mitchell County				X
Monroe County				X
Montgomery County				X
Morgan County				X
Murray County				X
Muscogee County				X
Newton County				X
Oconee County				X
Oglethorpe County				X
Paulding County				X
Peach County				X
Pickens County				X
Pierce County				X
Pike County				X
Polk County				X
Pulaski County				X
Putnam County				X
Quitman County				X
Rabun County				X
Randolph County				X
Richmond County				X
Rockdale County				X
Schley County				X
Screven County				X
Seminole County				X
Spalding County				X
Stephens County				X
Stewart County				X
Sumter County				X
Talbot County				X
Taliaferro County				X
Tattnall County				X
Taylor County				X
Telfair County				X
Terrell County				X
Thomas County				X
Tift County				X
Toombs County				X
Towns County				X
Treutlen County				X

Georgia—SO_2

Designated area	Does not meet primary standards	Does not meet secondary standards	Cannot be classified	Better than national standards
Troup County				X
Turner County				X
Twiggs County				X
Union County				X
Upson County				X
Walker County				X
Walton County				X
Ware County				X
Warren County				X
Washington County				X
Wayne County				X
Webster County				X
Wheeler County				X
White County				X
Whitfield County				X
Wilcox County				X
Wilkes County				X
Wilkinson County				X
Worth County				X

* See FEDERAL REGISTER of September 23, 1981.

Georgia—Carbon Monoxide

Designated Area	Designation		Classification	
	Date [1]	Type	Date [1]	Type
Statewide		Unclassifiable/Attainment		
Appling County				
Atkinson County				
Bacon County				
Baker County				
Baldwin County				
Banks County				
Barrow County				
Bartow County				
Ben Hill County				
Berrien County				
Bibb County				
Bleckley County				
Brantley County				
Brooks County				
Bryan County				
Bulloch County				
Burke County				
Butts County				
Calhoun County				
Camden County				
Candler County				
Carroll County				
Catoosa County				
Charlton County				
Chatham County				
Chattahoochee County				
Chattooga County				
Cherokee County				
Clarke County				
Clay County				
Clayton County				
Clinch County				
Cobb County				
Coffee County				
Colquitt County				
Columbia County				
Cook County				
Coweta County				
Crawford County				
Crisp County				
Dade County				
Dawson County				

Georgia—Carbon Monoxide

Designated Area	Designation		Classification	
	Date [1]	Type	Date [1]	Type
De Kalb County				
Decatur County				
Dodge County				
Dooly County				
Dougherty County				
Douglas County				
Early County				
Echols County				
Effingham County				
Elbert County				
Emanuel County				
Evans County				
Fannin County				
Fayette County				
Floyd County				
Forsyth County				
Franklin County				
Fulton County				
Gilmer County				
Glascock County				
Glynn County				
Gordon County				
Grady County				
Greene County				
Gwinnett County				
Habersham County				
Hall County				
Hancock County				
Haralson County				
Harris County				
Hart County				
Heard County				
Henry County				
Houston County				
Irwin County				
Jackson County				
Jasper County				
Jeff Davis County				
Jefferson County				
Jenkins County				
Johnson County				
Jones County				
Lamar County				
Lanier County				
Laurens County				
Lee County				
Liberty County				
Lincoln County				
Long County				
Lowndes County				
Lumpkin County				
Macon County				
Madison County				
Marion County				
McDuffie County				
McIntosh County				
Meriwether County				
Miller County				
Mitchell County				
Monroe County				
Montgomery County				
Morgan County				
Murray County				
Muscogee County				
Newton County				
Oconee County				
Oglethorpe County				
Paulding County				
Peach County				
Pickens County				
Pierce County				

Georgia—Carbon Monoxide

Designated Area	Designation		Classification	
	Date [1]	Type	Date [1]	Type
Pike County				
Polk County				
Pulaski County				
Putnam County				
Quitman County				
Rabun County				
Randolph County				
Richmond County				
Rockdale County				
Schley County				
Screven County				
Seminole County				
Spalding County				
Stephens County				
Stewart County				
Sumter County				
Talbot County				
Taliaferro County				
Tattnall County				
Taylor County				
Telfair County				
Terrell County				
Thomas County				
Tift County				
Toombs County				
Towns County				
Treutlen County				
Troup County				
Turner County				
Twiggs County				
Union County				
Upson County				
Walker County				
Walton County				
Ware County				
Warren County				
Washington County				
Wayne County				
Webster County				
Wheeler County				
White County				
Whitfield County				
Wilcox County				
Wilkes County				
Wilkinson County				
Worth County				

[1] This date is November 15, 1990, unless otherwise noted.

Georgia—1978 Lead NAAQS

Designated Area	Designation		Classification	
	Date	Type	Date	Type
Muscogee County (part)—That portion of the county which includes a circle with a radius of 2.3 kilometers with the GNB, Inc., lead smelting and battery production facility in the center.	June 11, 1999	Attainment		
Rest of State Not Designated				

Georgia—Ozone (1-Hour Standard)[2]

Designated area	Designation		Classification	
	Date [1]	Type	Date [1]	Type
Atlanta Area:	6/14/05	Attainment		
Cherokee County	6/14/05	Attainment		
Clayton County	6/14/05	Attainment		
Cobb County	6/14/05	Attainment		
Coweta County	6/14/05	Attainment		
DeKalb County	6/14/05	Attainment		

Georgia—Ozone (1-Hour Standard)[2]

Designated area	Designation		Classification	
	Date [1]	Type	Date [1]	Type
Douglas County	6/14/05	Attainment		
Fayette County	6/14/05	Attainment		
Forsyth County	6/1405	Attainment		
Fulton County	6/14/05	Attainment		
Gwinnett County	6/14/05	Attainment		
Henry County	6/14/05	Attainment		
Paulding County	6/14/05	Attainment		
Rockdale County	6/14/05	Attainment		
Spalding County Area:				
Spalding County	11/15/90	Unclassifiable/Attainment	11/15/90	
Rest of State	.....	Unclassifiable/Attainment		
Appling County				
Atkinson County				
Bacon County				
Baker County				
Baldwin County				
Banks County				
Barrow County				
Bartow County				
Ben Hill County				
Berrien County				
Bibb County				
Bleckley County				
Brantley County				
Brooks County				
Bryan County				
Bulloch County				
Burke County				
Butts County				
Calhoun County				
Camden County				
Candler County				
Carroll County				
Catoosa County				
Charlton County				
Chatham County				
Chattahoochee County				
Chattooga County				
Clarke County				
Clay County				
Clinch County				
Coffee County				
Colquitt County				
Columbia County				
Cook County				
Crawford County				
Crisp County				
Dade County				
Dawson County				
Decatur County				
Dodge County				
Dooly County				
Dougherty County				
Early County				
Echols County				
Effingham County				
Elbert County				
Emanuel County				
Evans County				
Fannin County				
Floyd County				
Franklin County				
Gilmer County				
Glascock County				
Glynn County				
Gordon County				
Grady County				
Greene County				
Habersham County				
Hall County				
Hancock County				

Georgia—Ozone (1-Hour Standard)[2]

Designated area	Designation		Classification	
	Date [1]	Type	Date [1]	Type
Haralson County				
Harris County				
Hart County				
Heard County				
Houston County				
Irwin County				
Jackson County				
Jasper County				
Jeff Davis County				
Jefferson County				
Jenkins County				
Johnson County				
Jones County				
Lamar County				
Lanier County				
Laurens County				
Lee County				
Liberty County				
Lincoln County				
Long County				
Lowndes County				
Lumpkin County				
Macon County				
Madison County				
Marion County				
McDuffie County				
McIntosh County				
Meriwether County				
Miller County				
Mitchell County				
Monroe County				
Montgomery County				
Morgan County				
Murray County				
Muscogee County				
Newton County				
Oconee County				
Oglethorpe County				
Peach County				
Pickens County				
Pierce County				
Pike County				
Polk County				
Pulaski County				
Putnam County				
Quitman County				
Rabun County				
Randolph County				
Richmond County				
Schley County				
Screven County				
Seminole County				
Stephens County				
Stewart County				
Sumter County				
Talbot County				
Taliaferro County				
Tattnall County				
Taylor County				
Telfair County				
Terrell County				
Thomas County				
Tift County				
Toombs County				
Towns County				
Treutlen County				
Troup County				
Turner County				
Twiggs County				
Union County				
Upson County				

Georgia—Ozone (1-Hour Standard)[2]

Designated area	Designation		Classification	
	Date [1]	Type	Date [1]	Type
Walker County				
Walton County				
Ware County				
Warren County				
Washington County				
Wayne County				
Webster County				
Wheeler County				
White County				
Whitfield County				
Wilcox County				
Wilkes County				
Wilkinson County				
Worth County				

[1] This date is October 18, 2000, unless otherwise noted.
[2] The 1-hour ozone standard is revoked effective June 15, 2005 for all areas in Georgia, except the Chattanooga (Catoosa County) area where it is revoked effective April 15, 2009.

Georgia—NO_2 (1971 Annual Standard)

Designated area	Does not meet primary standards	Cannot be classified or better than national standards
Statewide		X

Georgia—NO_2 (2010 1-Hour Standard)

Designated area	Designation [a]	
	Date [1]	Type
Appling County		Unclassifiable/Attainment.
Atkinson County		Unclassifiable/Attainment.
Bacon County		Unclassifiable/Attainment.
Baker County		Unclassifiable/Attainment.
Baldwin County		Unclassifiable/Attainment.
Banks County		Unclassifiable/Attainment.
Barrow County		Unclassifiable/Attainment.
Bartow County		Unclassifiable/Attainment.
Ben Hill County		Unclassifiable/Attainment.
Berrien County		Unclassifiable/Attainment.
Bibb County		Unclassifiable/Attainment.
Bleckley County		Unclassifiable/Attainment.
Brantley County		Unclassifiable/Attainment.
Brooks County		Unclassifiable/Attainment.
Bryan County		Unclassifiable/Attainment.
Bulloch County		Unclassifiable/Attainment.
Burke County		Unclassifiable/Attainment.
Butts County		Unclassifiable/Attainment.
Calhoun County		Unclassifiable/Attainment.
Camden County		Unclassifiable/Attainment.
Candler County		Unclassifiable/Attainment.
Carroll County		Unclassifiable/Attainment.
Catoosa County		Unclassifiable/Attainment.
Charlton County		Unclassifiable/Attainment.
Chatham County		Unclassifiable/Attainment.
Chattahoochee County		Unclassifiable/Attainment.
Chattooga County		Unclassifiable/Attainment.
Cherokee County		Unclassifiable/Attainment.
Clarke County		Unclassifiable/Attainment.
Clay County		Unclassifiable/Attainment.
Clayton County		Unclassifiable/Attainment.
Clinch County		Unclassifiable/Attainment.
Cobb County		Unclassifiable/Attainment.
Coffee County		Unclassifiable/Attainment.
Colquitt County		Unclassifiable/Attainment.
Columbia County		Unclassifiable/Attainment.
Cook County		Unclassifiable/Attainment.
Coweta County		Unclassifiable/Attainment.
Crawford County		Unclassifiable/Attainment.

Georgia—NO_2 (2010 1-Hour Standard)

Designated area	Designation [a]	
	Date [1]	Type
Crisp County		Unclassifiable/Attainment.
Dade County		Unclassifiable/Attainment.
Dawson County		Unclassifiable/Attainment.
Decatur County		Unclassifiable/Attainment.
DeKalb County		Unclassifiable/Attainment.
Dodge County		Unclassifiable/Attainment.
Dooly County		Unclassifiable/Attainment.
Dougherty County		Unclassifiable/Attainment.
Douglass County		Unclassifiable/Attainment.
Early County		Unclassifiable/Attainment.
Echols County		Unclassifiable/Attainment.
Effingham County		Unclassifiable/Attainment.
Elbert County		Unclassifiable/Attainment.
Emanuel County		Unclassifiable/Attainment.
Evans County		Unclassifiable/Attainment.
Fannin County		Unclassifiable/Attainment.
Fayette County		Unclassifiable/Attainment.
Floyd County		Unclassifiable/Attainment.
Forsyth County		Unclassifiable/Attainment.
Franklin County		Unclassifiable/Attainment.
Fulton County		Unclassifiable/Attainment.
Gilmer County		Unclassifiable/Attainment.
Glascock County		Unclassifiable/Attainment.
Glynn County		Unclassifiable/Attainment.
Gordon County		Unclassifiable/Attainment.
Grady County		Unclassifiable/Attainment.
Greene County		Unclassifiable/Attainment.
Gwinnett County		Unclassifiable/Attainment.
Habersham County		Unclassifiable/Attainment.
Hall County		Unclassifiable/Attainment.
Hancock County		Unclassifiable/Attainment.
Haralson County		Unclassifiable/Attainment.
Harris County		Unclassifiable/Attainment.
Hart County		Unclassifiable/Attainment.
Heard County		Unclassifiable/Attainment.
Henry County		Unclassifiable/Attainment.
Houston County		Unclassifiable/Attainment.
Irwin County		Unclassifiable/Attainment.
Jackson County		Unclassifiable/Attainment.
Jasper County		Unclassifiable/Attainment.
Jeff Davis County		Unclassifiable/Attainment.
Jefferson County		Unclassifiable/Attainment.
Jenkins County		Unclassifiable/Attainment.
Johnson County		Unclassifiable/Attainment.
Jones County		Unclassifiable/Attainment.
Lamar County		Unclassifiable/Attainment.
Lanier County		Unclassifiable/Attainment.
Laurens County		Unclassifiable/Attainment.
Lee County		Unclassifiable/Attainment.
Liberty County		Unclassifiable/Attainment.
Lincoln County		Unclassifiable/Attainment.
Long County		Unclassifiable/Attainment.
Lowndes County		Unclassifiable/Attainment.
Lumpkin County		Unclassifiable/Attainment.
McDuffie County		Unclassifiable/Attainment.
McIntosh County		Unclassifiable/Attainment.
Macon County		Unclassifiable/Attainment.
Madison County		Unclassifiable/Attainment.
Marion County		Unclassifiable/Attainment.
Meriwether County		Unclassifiable/Attainment.
Miller County		Unclassifiable/Attainment.
Mitchell County		Unclassifiable/Attainment.
Monroe County		Unclassifiable/Attainment.
Montgomery County		Unclassifiable/Attainment.
Morgan County		Unclassifiable/Attainment.
Murray County		Unclassifiable/Attainment.
Muscogee County		Unclassifiable/Attainment.
Newton County		Unclassifiable/Attainment.
Oconee County		Unclassifiable/Attainment.
Oglethorpe County		Unclassifiable/Attainment.
Pauling County		Unclassifiable/Attainment.

Georgia—NO_2 (2010 1-Hour Standard)

Designated area	Designation [a]	
	Date [1]	Type
Peach County		Unclassifiable/Attainment.
Pickens County		Unclassifiable/Attainment.
Pierce County		Unclassifiable/Attainment.
Pike County		Unclassifiable/Attainment.
Polk County		Unclassifiable/Attainment.
Pulaski County		Unclassifiable/Attainment.
Putnam County		Unclassifiable/Attainment.
Quitman County		Unclassifiable/Attainment.
Rabun County		Unclassifiable/Attainment.
Randolph County		Unclassifiable/Attainment.
Richmond County		Unclassifiable/Attainment.
Rockdale County		Unclassifiable/Attainment.
Schley County		Unclassifiable/Attainment.
Screven County		Unclassifiable/Attainment.
Seminole County		Unclassifiable/Attainment.
Spalding County		Unclassifiable/Attainment.
Stephens County		Unclassifiable/Attainment.
Stewart County		Unclassifiable/Attainment.
Sumter County		Unclassifiable/Attainment.
Talbot County		Unclassifiable/Attainment.
Taliaferro County		Unclassifiable/Attainment.
Tattnall County		Unclassifiable/Attainment.
Taylor County		Unclassifiable/Attainment.
Telfair County		Unclassifiable/Attainment.
Terrell County		Unclassifiable/Attainment.
Thomas County		Unclassifiable/Attainment.
Tift County		Unclassifiable/Attainment.
Toombs County		Unclassifiable/Attainment.
Towns County		Unclassifiable/Attainment.
Treutlen County		Unclassifiable/Attainment.
Troup County		Unclassifiable/Attainment.
Turner County		Unclassifiable/Attainment.
Twiggs County		Unclassifiable/Attainment.
Union County		Unclassifiable/Attainment.
Upson County		Unclassifiable/Attainment.
Walker County		Unclassifiable/Attainment.
Walton County		Unclassifiable/Attainment.
Ware County		Unclassifiable/Attainment.
Warren County		Unclassifiable/Attainment.
Washington County		Unclassifiable/Attainment.
Wayne County		Unclassifiable/Attainment.
Webster County		Unclassifiable/Attainment.
Wheeler County		Unclassifiable/Attainment.
White County		Unclassifiable/Attainment.
Whitfield County		Unclassifiable/Attainment.
Wilcox County		Unclassifiable/Attainment.
Wilkes County		Unclassifiable/Attainment.
Wilkinson County		Unclassifiable/Attainment.
Worth County		Unclassifiable/Attainment.

[a] Includes Indian Country located in each county or area, except as otherwise specified.
[1] This date is 90 days after October 31, 2011, unless otherwise noted.

Georgia—Ozone (8-Hour Standard)

Designated area	Designation [a]		Category/classification	
	Date [1]	Type	Date [1]	Type
Atlanta, GA:				
Barrow County	This action is effective Nov. 30, 2010	Nonattainment	April 7, 2008	Subpart 2/Moderate [4].
Bartow County	This action is effective Nov. 30, 2010	Nonattainment	April 7, 2008	Subpart 2/Moderate [4].

Georgia—Ozone (8-Hour Standard)

Designated area	Designation [a]		Category/classification	
	Date [1]	Type	Date [1]	Type
Carroll County	This action is effective Nov. 30, 2010	Nonattainment	April 7, 2008	Subpart 2/Moderate [4].
Cherokee County	This action is effective Nov. 30, 2010	Nonattainment	April 7, 2008	Subpart 2/Moderate [4].
Clayton County	This action is effective Nov. 30, 2010	Nonattainment	April 7, 2008	Subpart 2/Moderate [4].
Cobb County	This action is effective Nov. 30, 2010	Nonattainment	April 7, 2008	Subpart 2/Moderate [4].
Coweta County	This action is effective Nov. 30, 2010	Nonattainment	April 7, 2008	Subpart 2/Moderate [4].
DeKalb County	This action is effective Nov. 30, 2010	Nonattainment	April 7, 2008	Subpart 2/Moderate [4].
Douglas County	This action is effective Nov. 30, 2010	Nonattainment	April 7, 2008	Subpart 2/Moderate [4].
Fayette County	This action is effective Nov. 30, 2010	Nonattainment	April 7, 2008	Subpart 2/Moderate [4].
Forsyth County	This action is effective Nov. 30, 2010	Nonattainment	April 7, 2008	Subpart 2/Moderate [4].
Fulton County	This action is effective Nov. 30, 2010	Nonattainment	April 7, 2008	Subpart 2/Moderate [4].
Gwinnett County	This action is effective Nov. 30, 2010	Nonattainment	April 7, 2008	Subpart 2/Moderate [4].
Hall County	This action is effective Nov. 30, 2010	Nonattainment	April 7, 2008	Subpart 2/Moderate [4].
Henry County	This action is effective Nov. 30, 2010	Nonattainment	April 7, 2008	Subpart 2/Moderate [4].
Newton County	This action is effective Nov. 30, 2010	Nonattainment	April 7, 2008	Subpart 2/Moderate [4].

Georgia—Ozone (8-Hour Standard)

Designated area	Designation [a]		Category/classification	
	Date [1]	Type	Date [1]	Type
Paulding County	This action is effective Nov. 30, 2010	Nonattainment	April 7, 2008	Subpart 2/Moderate [4].
Rockdale County	This action is effective Nov. 30, 2010	Nonattainment	April 7, 2008	Subpart 2/Moderate [4].
Spalding County	This action is effective Nov. 30, 2010	Nonattainment	April 7, 2008	Subpart 2/Moderate [4].
Walton County	This action is effective Nov. 30, 2010	Nonattainment	April 7, 2008	Subpart 2/Moderate [4].
Macon, GA: [3]				
Bibb County	10/19/07	Attainment.		
Monroe County (part)	10/19/07	Attainment.		
From the point where Bibb and Monroe Counties meet at U.S. Hwy 23/Georgia Hwy 87 follow the Bibb/Monroe County line westward 150′ from the U.S. Hwy 23/Georgia Hwy 87 centerline, proceed northward 150′ west of and parallel to the U.S. Hwy 23/Georgia Hwy 87 centerline to 33 degrees, 04 minutes, 30 seconds; proceed westward to 83 degrees, 49 minutes, 45 seconds; proceed due south to 150′ north of the Georgia Hwy 18 centerline, proceed eastward 150′ north of and parallel to the Georgia Hwy 18 centerline to 1150′ west of the U.S. Hwy 23/Georgia Hwy 87 centerline, proceed southward 1150′ west of and parallel to the U.S. Hwy 23/Georgia Hwy 87 centerline to the Monroe/Bibb County line; then follow the Monroe/Bibb County line to 150′ west of the U.S. Hwy 23/Georgia Hwy 87 centerline.				
Chattanooga, TN–GA:				
Catoosa County	(2)	Attainment.		
Murray Co (Chattahoochee Nat Forest), GA:				
Murray County (part)	11/15/07	Attainment		
The area enclosed to the east by Murray County's eastern border, to the north by latitude of 34.9004 degrees, to the west by longitude 84.7200 degrees, and to the south by 34.7040 degrees. All mountain peaks within the Chattahoochee National Forest area of Murray County that have an elevation greater than or equal to 2,400 feet and that are enclosed by contour lines that close on themselves				
Rest of State	.....	Unclassifiable/Attainment		
Appling County.				
Atkinson County				
Bacon County				
Baker County				
Baldwin County				
Banks County				
Ben Hill County				

Georgia—Ozone (8-Hour Standard)

Designated area	Designation [a]		Category/classification	
	Date [1]	Type	Date [1]	Type
Berrien County				
Bleckley County				
Brantley County				
Brooks County				
Bryan County				
Bulloch County				
Burke County				
Butts County				
Calhoun County				
Camden County				
Candler County				
Charlton County				
Chatham County				
Chattahoochee County				
Chattooga County				
Clarke County				
Clay County				
Clinch County				
Coffee County				
Colquitt County				
Columbia County				
Cook County				
Crawford County				
Crisp County				
Dade County				
Dawson County				
Decatur County				
Dodge County				
Dooly County				
Dougherty County				
Early County				
Echols County				
Effingham County				
Elbert County				
Emanuel County				
Evans County				
Fannin County				
Floyd County				
Franklin County				
Gilmer County				
Glascock County				
Glynn County				
Gordon County				
Grady County				
Greene County				
Habersham County				
Hancock County				
Haralson County				
Harris County				
Hart County				
Heard County				
Houston County				
Irwin County				
Jackson County				
Jasper County				
Jeff Davis County				
Jefferson County				
Jenkins County				
Johnson County				
Jones County				
Lamar County				
Lanier County				
Laurens County				
Lee County				
Liberty County				
Lincoln County				
Long County				
Lowndes County				
Lumpkin County				
Macon County				
Madison County				

Georgia—Ozone (8-Hour Standard)

Designated area	Designation [a]		Category/classification	
	Date [1]	Type	Date [1]	Type
Marion County				
McDuffie County				
McIntosh County				
Meriwether County				
Miller County				
Mitchell County				
Monroe County (part) remainder				
Montgomery County				
Morgan County				
Murray County (part) remainder				
Muscogee County				
Oconee County				
Oglethorpe County				
Peach County				
Pickens County				
Pierce County				
Pike County				
Polk County				
Pulaski County				
Putnam County				
Quitman County				
Rabun County				
Randolph County				
Richmond County				
Schley County				
Screven County				
Seminole County				
Stephens County				
Stewart County				
Sumter County				
Talbot County				
Taliaferro County				
Tattnall County				
Taylor County				
Telfair County				
Terrell County				
Thomas County				
Tift County				
Toombs County				
Towns County				
Treutlen County				
Troup County				
Turner County				
Twiggs County				
Union County				
Upson County				
Walker County				
Ware County				
Warren County				
Washington County				
Wayne County				
Webster County				
Wheeler County				
White County				
Whitfield County				
Wilcox County				
Wilkes County				
Wilkinson County				
Worth County				

[a] Includes Indian Country located in each county or area, except as otherwise specified.
[1] This date is June 15, 2004, unless otherwise noted.
[2] Effective April 15, 2008.
[3] The boundary change is effective October 13, 2006.

Georgia—$PM_{2.5}$ (Annual NAAQS)

Designated area	Designation [a]	
	Date [1]	Type
Athens, GA:		
Clarke County	.....	Unclassifiable/Attainment.

Georgia—$PM_{2.5}$ (Annual NAAQS)

Designated area	Designation [a]	
	Date [1]	Type
Atlanta, GA:		
Barrow County		Nonattainment.
Bartow County		Nonattainment.
Carroll County		Nonattainment.
Cherokee County		Nonattainment.
Clayton County		Nonattainment.
Cobb County		Nonattainment.
Coweta County		Nonattainment.
DeKalb County		Nonattainment.
Douglas County		Nonattainment.
Fayette County		Nonattainment.
Forsyth County		Nonattainment.
Fulton County		Nonattainment.
Gwinnett County		Nonattainment.
Hall County		Nonattainment.
Heard County (part)		Nonattainment.
The northeast portion that extends north of 33 degrees 24 minutes (north) to the Carroll County border and east of 85 degrees 3 minutes (west) to the Coweta County border.		
Henry County		Nonattainment.
Newton County		Nonattainment.
Paulding County		Nonattainment.
Putnam County (part)		Nonattainment.
The area described by U.S. Census 2000 block group identifier 13–237–9603–1.		
Rockdale County		Nonattainment.
Spalding County		Nonattainment.
Walton County		Nonattainment.
Chattanooga, TN-GA:		
Catoosa County		Nonattainment.
Walker County		Nonattainment.
Columbus, GA-AL:		
Muscogee County		Unclassifiable/Attainment.
Rome, GA:		
Floyd County		Nonattainment.
Macon, GA:		
Bibb County		Nonattainment.
Monroe County (part)		Nonattainment.
From the point where Bibb and Monroe Counties meet at U.S. Hwy 23/Georgia Hwy 98 follow the Bibb/Monroe County line westward 150′ from the U.S. Hwy 23/Georgia Hwy 87 centerline, proceed northward 150′ west of and parallel to the U.S. Hwy 23/Georgia Hwy 87 centerline to 33 degrees, 04 minutes, 30 seconds; proceeed westward to 83 degrees, 49 minutes, 45 seconds; proceed due south to 150′ north of the Georgia Hwy 18 centerline, proceed eastward 150′ north of and parallel to the Georgia Hwy 18 centerline to 1150′ west of the U.S. Hwy 23/ Georgia Hwy 87 centerline, proceed southward 1150′ west of and parallel to the U.S. Hwy 23/ Georgia Hwy 87 centerline to the Monroe/Bibb County line; then follow the Monroe/Bibb County line to 150′ west of the U.S. Hwy 23/Georgia Hwy 87 centerline.		
Rest of State:		
Appling County		Unclassifiable/Attainment.
Atkinson County		Unclassifiable/Attainment.
Bacon County		Unclassifiable/Attainment.
Baker County		Unclassifiable/Attainment.
Baldwin County		Unclassifiable/Attainment.
Banks County		Unclassifiable/Attainment.
Ben Hill County		Unclassifiable/Attainment.
Berrien County		Unclassifiable/Attainment.
Bleckley County		Unclassifiable/Attainment.
Brantley County		Unclassifiable/Attainment.
Brooks County		Unclassifiable/Attainment.
Bryan County		Unclassifiable/Attainment.
Bulloch County		Unclassifiable/Attainment.
Burke County		Unclassifiable/Attainment.
Butts County		Unclassifiable/Attainment.
Calhoun County		Unclassifiable/Attainment.
Camden County		Unclassifiable/Attainment.
Candler County		Unclassifiable/Attainment.

Georgia—$PM_{2.5}$ (Annual NAAQS)

Designated area	Designation [a]	
	Date [1]	Type
Charlton County		Unclassifiable/Attainment.
Chatham County		Unclassifiable/Attainment.
Chattahoochee County		Unclassifiable/Attainment.
Chattooga County		Unclassifiable/Attainment.
Clay County		Unclassifiable/Attainment.
Clinch County		Unclassifiable/Attainment.
Coffee County		Unclassifiable/Attainment.
Colquitt County		Unclassifiable/Attainment.
Columbia County		Unclassifiable/Attainment.
Cook County		Unclassifiable/Attainment.
Crawford County		Unclassifiable/Attainment.
Crisp County		Unclassifiable/Attainment.
Dade County		Unclassifiable/Attainment.
Dawson County		Unclassifiable/Attainment.
Decatur County		Unclassifiable/Attainment.
Dodge County		Unclassifiable/Attainment.
Dooly County		Unclassifiable/Attainment.
Dougherty County		Unclassifiable/Attainment.
Early County		Unclassifiable/Attainment.
Echols County		Unclassifiable/Attainment.
Effingham County		Unclassifiable/Attainment.
Elbert County		Unclassifiable/Attainment.
Emanuel County		Unclassifiable/Attainment.
Evans County		Unclassifiable/Attainment.
Fannin County		Unclassifiable/Attainment.
Franklin County		Unclassifiable/Attainment.
Gilmer County		Unclassifiable/Attainment.
Glascock County		Unclassifiable/Attainment.
Glynn County		Unclassifiable/Attainment.
Gordon County		Unclassifiable/Attainment.
Grady County		Unclassifiable/Attainment.
Greene County		Unclassifiable/Attainment.
Habersham County		Unclassifiable/Attainment.
Hancock County		Unclassifiable/Attainment.
Haralson County		Unclassifiable/Attainment.
Harris County		Unclassifiable/Attainment.
Hart County		Unclassifiable/Attainment.
Heard County (remainder)		Unclassifiable/Attainment.
Houston County		Unclassifiable/Attainment.
Irwin County		Unclassifiable/Attainment.
Jackson County		Unclassifiable/Attainment.
Jasper County		Unclassifiable/Attainment.
Jeff Davis County		Unclassifiable/Attainment.
Jefferson County		Unclassifiable/Attainment.
Jenkins County		Unclassifiable/Attainment.
Johnson County		Unclassifiable/Attainment.
Jones County		Unclassifiable/Attainment.
Lamar County		Unclassifiable/Attainment.
Lanier County		Unclassifiable/Attainment.
Laurens County		Unclassifiable/Attainment.
Lee County		Unclassifiable/Attainment.
Liberty County		Unclassifiable/Attainment.
Lincoln County		Unclassifiable/Attainment.
Long County		Unclassifiable/Attainment.
Lowndes County		Unclassifiable/Attainment.
Lumpkin County		Unclassifiable/Attainment.
McDuffie County		Unclassifiable/Attainment.
McIntosh County		Unclassifiable/Attainment.
Macon County		Unclassifiable/Attainment.
Madison County		Unclassifiable/Attainment.
Marion County		Unclassifiable/Attainment.
Meriwether County		Unclassifiable/Attainment.
Miller County		Unclassifiable/Attainment.
Mitchell County		Unclassifiable/Attainment.
Monroe County (remainder)		Unclassifiable/Attainment.
Montgomery County		Unclassifiable/Attainment.
Morgan County		Unclassifiable/Attainment.
Murray County		Unclassifiable/Attainment.
Oconee County		Unclassifiable/Attainment.
Oglethorpe County		Unclassifiable/Attainment.
Peach County		Unclassifiable/Attainment.

Georgia—$PM_{2.5}$ (Annual NAAQS)

Designated area	Designation [a]	
	Date [1]	Type
Pickens County		Unclassifiable/Attainment.
Pierce County		Unclassifiable/Attainment.
Pike County		Unclassifiable/Attainment.
Polk County		Unclassifiable/Attainment.
Pulaski County		Unclassifiable/Attainment.
Putnam County (remainder)		Unclassifiable/Attainment.
Quitman County		Unclassifiable/Attainment.
Rabun County		Unclassifiable/Attainment.
Randolph County		Unclassifiable/Attainment.
Richmond County		Unclassifiable/Attainment.
Schley County		Unclassifiable/Attainment.
Screven County		Unclassifiable/Attainment.
Seminole County		Unclassifiable/Attainment.
Stephens County		Unclassifiable/Attainment.
Stewart County		Unclassifiable/Attainment.
Sumter County		Unclassifiable/Attainment.
Talbot County		Unclassifiable/Attainment.
Taliaferro County		Unclassifiable/Attainment.
Tattnall County		Unclassifiable/Attainment.
Taylor County		Unclassifiable/Attainment.
Telfair County		Unclassifiable/Attainment.
Terrell County		Unclassifiable/Attainment.
Thomas County		Unclassifiable/Attainment.
Tift County		Unclassifiable/Attainment.
Toombs County		Unclassifiable/Attainment.
Towns County		Unclassifiable/Attainment.
Treutlen County		Unclassifiable/Attainment.
Troup County		Unclassifiable/Attainment.
Turner County		Unclassifiable/Attainment.
Twiggs County		Unclassifiable/Attainment.
Union County		Unclassifiable/Attainment.
Upson County		Unclassifiable/Attainment.
Ware County		Unclassifiable/Attainment.
Warren County		Unclassifiable/Attainment.
Washington County		Unclassifiable/Attainment.
Wayne County		Unclassifiable/Attainment.
Webster County		Unclassifiable/Attainment.
Wheeler County		Unclassifiable/Attainment.
White County		Unclassifiable/Attainment.
Whitfield County		Unclassifiable/Attainment.
Wilcox County		Unclassifiable/Attainment.
Wilkes County		Unclassifiable/Attainment.
Wilkinson County		Unclassifiable/Attainment.
Worth County		Unclassifiable/Attainment.

[a] Includes Indian Country located in each county or area, except as otherwise specified.
[1] This date is 90 days after January 5, 2005, unless otherwise noted.

Georgia—$PM_{2.5}$ [24-hour NAAQS]

Designated area	Designation for the 1997 NAAQS [a]		Designation for the 2006 NAAQS [a]	
	Date [1]	Type	Date [2]	Type
Statewide:				
Appling County		Unclassifiable/Attainment.		Unclassifiable/Attainment.
Atkinson County		Unclassifiable/Attainment.		Unclassifiable/Attainment.
Bacon County		Unclassifiable/Attainment.		Unclassifiable/Attainment.
Baker County		Unclassifiable/Attainment.		Unclassifiable/Attainment.
Baldwin County		Unclassifiable/Attainment.		Unclassifiable/Attainment.
Banks County		Unclassifiable/Attainment.		Unclassifiable/Attainment.
Barrow County		Unclassifiable/Attainment.		Unclassifiable/Attainment.
Bartow County		Unclassifiable/Attainment.		Unclassifiable/Attainment.
Ben Hill County		Unclassifiable/Attainment.		Unclassifiable/Attainment.

Georgia—$PM_{2.5}$ [24-hour NAAQS]

Designated area	Designation for the 1997 NAAQS [a]		Designation for the 2006 NAAQS [a]	
	Date [1]	Type	Date [2]	Type
Berrien County		Unclassifiable/Attainment.		Unclassifiable/Attainment.
Bibb County		Unclassifiable/Attainment.		Unclassifiable/Attainment.
Bleckley County		Unclassifiable/Attainment.		Unclassifiable/Attainment.
Brantley County		Unclassifiable/Attainment.		Unclassifiable/Attainment.
Brooks County		Unclassifiable/Attainment.		Unclassifiable/Attainment.
Bryan County		Unclassifiable/Attainment.		Unclassifiable/Attainment.
Bulloch County		Unclassifiable/Attainment.		Unclassifiable/Attainment.
Burke County		Unclassifiable/Attainment.		Unclassifiable/Attainment.
Butts County		Unclassifiable/Attainment.		Unclassifiable/Attainment.
Calhoun County		Unclassifiable/Attainment.		Unclassifiable/Attainment.
Camden County		Unclassifiable/Attainment.		Unclassifiable/Attainment.
Candler County		Unclassifiable/Attainment.		Unclassifiable/Attainment.
Carroll County		Unclassifiable/Attainment.		Unclassifiable/Attainment.
Catoosa County		Unclassifiable/Attainment.		Unclassifiable/Attainment.
Charlton County		Unclassifiable/Attainment.		Unclassifiable/Attainment.
Chatham County		Unclassifiable/Attainment.		Unclassifiable/Attainment.
Chattahoochee County		Unclassifiable/Attainment.		Unclassifiable/Attainment.
Chattooga County		Unclassifiable/Attainment.		Unclassifiable/Attainment.
Cherokee County		Unclassifiable/Attainment.		Unclassifiable/Attainment.
Clarke County		Unclassifiable/Attainment.		Unclassifiable/Attainment.
Clay County		Unclassifiable/Attainment.		Unclassifiable/Attainment.
Clayton County		Unclassifiable/Attainment.		Unclassifiable/Attainment.
Clinch County		Unclassifiable/Attainment.		Unclassifiable/Attainment.
Cobb County		Unclassifiable/Attainment.		Unclassifiable/Attainment.
Coffee County		Unclassifiable/Attainment.		Unclassifiable/Attainment.
Colquitt County		Unclassifiable/Attainment.		Unclassifiable/Attainment.
Columbia County		Unclassifiable/Attainment.		Unclassifiable/Attainment.
Cook County		Unclassifiable/Attainment.		Unclassifiable/Attainment.
Coweta County		Unclassifiable/Attainment.		Unclassifiable/Attainment.
Crawford County		Unclassifiable/Attainment.		Unclassifiable/Attainment.
Crisp County		Unclassifiable/Attainment.		Unclassifiable/Attainment.
Dade County		Unclassifiable/Attainment.		Unclassifiable/Attainment.
Dawson County		Unclassifiable/Attainment.		Unclassifiable/Attainment.
Decatur County		Unclassifiable/Attainment.		Unclassifiable/Attainment.
DeKalb County		Unclassifiable/Attainment.		Unclassifiable/Attainment.

Georgia—$PM_{2.5}$ [24-hour NAAQS]

Designated area	Designation for the 1997 NAAQS [a]		Designation for the 2006 NAAQS [a]	
	Date [1]	Type	Date [2]	Type
Dodge County		Unclassifiable/Attainment.		Unclassifiable/Attainment.
Dooly County		Unclassifiable/Attainment.		Unclassifiable/Attainment.
Dougherty County		Unclassifiable/Attainment.		Unclassifiable/Attainment.
Douglass County		Unclassifiable/Attainment.		Unclassifiable/Attainment.
Early County		Unclassifiable/Attainment.		Unclassifiable/Attainment.
Echols County		Unclassifiable/Attainment.		Unclassifiable/Attainment.
Effingham County		Unclassifiable/Attainment.		Unclassifiable/Attainment.
Elbert County		Unclassifiable/Attainment.		Unclassifiable/Attainment.
Emanuel County		Unclassifiable/Attainment.		Unclassifiable/Attainment.
Evans County		Unclassifiable/Attainment.		Unclassifiable/Attainment.
Fannin County		Unclassifiable/Attainment.		Unclassifiable/Attainment.
Fayette County		Unclassifiable/Attainment.		Unclassifiable/Attainment.
Floyd County		Unclassifiable/Attainment.		Unclassifiable/Attainment.
Forsyth County		Unclassifiable/Attainment.		Unclassifiable/Attainment.
Franklin County		Unclassifiable/Attainment.		Unclassifiable/Attainment.
Fulton County		Unclassifiable/Attainment.		Unclassifiable/Attainment.
Gilmer County		Unclassifiable/Attainment.		Unclassifiable/Attainment.
Glascock County		Unclassifiable/Attainment.		Unclassifiable/Attainment.
Glynn County		Unclassifiable/Attainment.		Unclassifiable/Attainment.
Gordon County		Unclassifiable/Attainment.		Unclassifiable/Attainment.
Grady County		Unclassifiable/Attainment.		Unclassifiable/Attainment.
Greene County		Unclassifiable/Attainment.		Unclassifiable/Attainment.
Gwinnett County		Unclassifiable/Attainment.		Unclassifiable/Attainment.
Habersham County		Unclassifiable/Attainment.		Unclassifiable/Attainment.
Hall County		Unclassifiable/Attainment.		Unclassifiable/Attainment.
Hancock County		Unclassifiable/Attainment.		Unclassifiable/Attainment.
Haralson County		Unclassifiable/Attainment.		Unclassifiable/Attainment.
Harris County		Unclassifiable/Attainment.		Unclassifiable/Attainment.
Hart County		Unclassifiable/Attainment.		Unclassifiable/Attainment.
Heard County		Unclassifiable/Attainment.		Unclassifiable/Attainment.
Henry County		Unclassifiable/Attainment.		Unclassifiable/Attainment.
Houston County		Unclassifiable/Attainment.		Unclassifiable/Attainment.
Irwin County		Unclassifiable/Attainment.		Unclassifiable/Attainment.
Jackson County		Unclassifiable/Attainment.		Unclassifiable/Attainment.
Jasper County		Unclassifiable/Attainment.		Unclassifiable/Attainment.

Georgia—$PM_{2.5}$ [24-hour NAAQS]

Designated area	Designation for the 1997 NAAQS [a]		Designation for the 2006 NAAQS [a]	
	Date [1]	Type	Date [2]	Type
Jeff Davis County		Unclassifiable/Attainment.		Unclassifiable/Attainment.
Jefferson County		Unclassifiable/Attainment.		Unclassifiable/Attainment.
Jenkins County		Unclassifiable/Attainment.		Unclassifiable/Attainment.
Johnson County		Unclassifiable/Attainment.		Unclassifiable/Attainment.
Jones County		Unclassifiable/Attainment.		Unclassifiable/Attainment.
Lamar County		Unclassifiable/Attainment.		Unclassifiable/Attainment.
Lanier County		Unclassifiable/Attainment.		Unclassifiable/Attainment.
Laurens County		Unclassifiable/Attainment.		Unclassifiable/Attainment.
Lee County		Unclassifiable/Attainment.		Unclassifiable/Attainment.
Liberty County		Unclassifiable/Attainment.		Unclassifiable/Attainment.
Lincoln County		Unclassifiable/Attainment.		Unclassifiable/Attainment.
Long County		Unclassifiable/Attainment.		Unclassifiable/Attainment.
Lowdes County		Unclassifiable/Attainment.		Unclassifiable/Attainment.
Lumpkin County		Unclassifiable/Attainment.		Unclassifiable/Attainment.
McDuffie County		Unclassifiable/Attainment.		Unclassifiable/Attainment.
McIntosh County		Unclassifiable/Attainment.		Unclassifiable/Attainment.
Macon County		Unclassifiable/Attainment.		Unclassifiable/Attainment.
Madison County		Unclassifiable/Attainment.		Unclassifiable/Attainment.
Marion County		Unclassifiable/Attainment.		Unclassifiable/Attainment.
Meriwether County		Unclassifiable/Attainment.		Unclassifiable/Attainment.
Miller County		Unclassifiable/Attainment.		Unclassifiable/Attainment.
Mitchell County		Unclassifiable/Attainment.		Unclassifiable/Attainment.
Monroe County		Unclassifiable/Attainment.		Unclassifiable/Attainment.
Montgomery County		Unclassifiable/Attainment.		Unclassifiable/Attainment.
Morgan County		Unclassifiable/Attainment.		Unclassifiable/Attainment.
Murray County		Unclassifiable/Attainment.		Unclassifiable/Attainment.
Muscogee County		Unclassifiable/Attainment.		Unclassifiable/Attainment.
Newton County		Unclassifiable/Attainment.		Unclassifiable/Attainment.
Oconee County		Unclassifiable/Attainment.		Unclassifiable/Attainment.
Oglethorpe County		Unclassifiable/Attainment.		Unclassifiable/Attainment.
Pauling County		Unclassifiable/Attainment.		Unclassifiable/Attainment.
Peach County		Unclassifiable/Attainment.		Unclassifiable/Attainment.
Pickens County		Unclassifiable/Attainment.		Unclassifiable/Attainment.
Pierce County		Unclassifiable/Attainment.		Unclassifiable/Attainment.
Pike County		Unclassifiable/Attainment.		Unclassifiable/Attainment.

Georgia—$PM_{2.5}$ [24-hour NAAQS]

Designated area	Designation for the 1997 NAAQS [a]		Designation for the 2006 NAAQS [a]	
	Date [1]	Type	Date [2]	Type
Polk County		Unclassifiable/Attainment.		Unclassifiable/Attainment.
Pulaski County		Unclassifiable/Attainment.		Unclassifiable/Attainment.
Putnam County		Unclassifiable/Attainment.		Unclassifiable/Attainment.
Quitman County		Unclassifiable/Attainment.		Unclassifiable/Attainment.
Rabun County		Unclassifiable/Attainment.		Unclassifiable/Attainment.
Randolph County		Unclassifiable/Attainment.		Unclassifiable/Attainment.
Richmond County		Unclassifiable/Attainment.		Unclassifiable/Attainment.
Rockdale County		Unclassifiable/Attainment.		Unclassifiable/Attainment.
Schley County		Unclassifiable/Attainment.		Unclassifiable/Attainment.
Screven County		Unclassifiable/Attainment.		Unclassifiable/Attainment.
Seminole County		Unclassifiable/Attainment.		Unclassifiable/Attainment.
Spalding County		Unclassifiable/Attainment.		Unclassifiable/Attainment.
Stephens County		Unclassifiable/Attainment.		Unclassifiable/Attainment.
Stewart County		Unclassifiable/Attainment.		Unclassifiable/Attainment.
Sumter County		Unclassifiable/Attainment.		Unclassifiable/Attainment.
Talbot County		Unclassifiable/Attainment.		Unclassifiable/Attainment.
Taliaferro County		Unclassifiable/Attainment.		Unclassifiable/Attainment.
Tattnall County		Unclassifiable/Attainment.		Unclassifiable/Attainment.
Taylor County		Unclassifiable/Attainment.		Unclassifiable/Attainment.
Telfair County		Unclassifiable/Attainment.		Unclassifiable/Attainment.
Terrell County		Unclassifiable/Attainment.		Unclassifiable/Attainment.
Thomas County		Unclassifiable/Attainment.		Unclassifiable/Attainment.
Tift County		Unclassifiable/Attainment.		Unclassifiable/Attainment.
Toombs County		Unclassifiable/Attainment.		Unclassifiable/Attainment.
Towns County		Unclassifiable/Attainment.		Unclassifiable/Attainment.
Treutlen County		Unclassifiable/Attainment.		Unclassifiable/Attainment.
Troup County		Unclassifiable/Attainment.		Unclassifiable/Attainment.
Turner County		Unclassifiable/Attainment.		Unclassifiable/Attainment.
Twiggs County		Unclassifiable/Attainment.		Unclassifiable/Attainment.
Union County		Unclassifiable/Attainment.		Unclassifiable/Attainment.
Upson County		Unclassifiable/Attainment.		Unclassifiable/Attainment.
Walker County		Unclassifiable/Attainment.		Unclassifiable/Attainment.
Walton County		Unclassifiable/Attainment.		Unclassifiable/Attainment.
Ware County		Unclassifiable/Attainment.		Unclassifiable/Attainment.
Warren County		Unclassifiable/Attainment.		Unclassifiable/Attainment.

Georgia—$PM_{2.5}$ [24-hour NAAQS]

Designated area	Designation for the 1997 NAAQS [a]		Designation for the 2006 NAAQS [a]	
	Date [1]	Type	Date [2]	Type
Washington County		Unclassifiable/Attainment.		Unclassifiable/Attainment.
Wayne County		Unclassifiable/Attainment.		Unclassifiable/Attainment.
Webster County		Unclassifiable/Attainment.		Unclassifiable/Attainment.
Wheeler County		Unclassifiable/Attainment.		Unclassifiable/Attainment.
White County		Unclassifiable/Attainment.		Unclassifiable/Attainment.
Whitfield County		Unclassifiable/Attainment.		Unclassifiable/Attainment.
Wilcox County		Unclassifiable/Attainment.		Unclassifiable/Attainment.
Wilkes County		Unclassifiable/Attainment.		Unclassifiable/Attainment.
Wilkinson County		Unclassifiable/Attainment.		Unclassifiable/Attainment.
Worth County		Unclassifiable/Attainment.		Unclassifiable/Attainment.

[a] Includes Indian Country located in each county or area, except as otherwise specified.
[1] This date is 90 days after January 5, 2005, unless otherwise noted.
[2] This date is 30 days after November 13, 2009, unless otherwise noted.

Georgia—2008 Lead NAAQS

Designated area	Designation for the 2008 NAAQS [a]	
	Date [1]	Type
Whole State		Unclassifiable/Attainment.

[a] Includes Indian Country located in each county or area, except as otherwise specified.
[1] December 31, 2011 unless otherwise noted.

[43 FR 8964, Mar. 3, 1978]

EDITORIAL NOTE: For FEDERAL REGISTER citations affecting § 81.311 see the List of CFR Sections Affected, which appears in the Finding Aids section of the printed volume and at *www.fdsys.gov*.

EFFECTIVE DATE NOTE: At 77 FR 30113, May 21, 2012, § 81.311 was amended by revising the table heading for ''Georgia—-Ozone (8-Hour Standard)'' to read ''Georgia—1997 8-Hour Ozone NAAQS (Primary and Secondary)''; and by adding a new table entitled ''Georgia—2008 8-Hour Ozone NAAQS (Primary and Secondary)'' following the newly designated table ''Georgia—1997 8-Hour Ozone NAAQS (Primary and Secondary)'', effective July 20, 2012.. For the convenience of the user, the added text is set forth as follows:

§ 81.311 Georgia.

* * * * *

Georgia—2008 8-Hour Ozone NAAQS (Primary and secondary)

Designated area	Designation		Classification	
	Date [1]	Type	Date [1]	Type
Atlanta, GA: [2]		Nonattainment		Marginal.
Bartow County				
Cherokee County				
Clayton County				
Cobb County				
Coweta County				
DeKalb County				
Douglas County				
Fayette County				
Forsyth County				
Fulton County				
Gwinnett County				
Henry County				

Georgia—2008 8-Hour Ozone NAAQS (Primary and secondary)

Designated area	Designation		Classification	
	Date [1]	Type	Date [1]	Type
Newton County				
Paulding County				
Rockdale County				
Rest of State: [3]				
Appling County		Unclassifiable/Attainment		
Atkinson County		Unclassifiable/Attainment		
Bacon County		Unclassifiable/Attainment		
Baker County		Unclassifiable/Attainment		
Baldwin County		Unclassifiable/Attainment		
Banks County		Unclassifiable/Attainment		
Barrow County		Unclassifiable/Attainment		
Ben Hill County		Unclassifiable/Attainment		
Berrien County		Unclassifiable/Attainment		
Bibb County		Unclassifiable/Attainment		
Bleckley County		Unclassifiable/Attainment		
Brantley County		Unclassifiable/Attainment		
Brooks County		Unclassifiable/Attainment		
Bryan County		Unclassifiable/Attainment		
Bulloch County		Unclassifiable/Attainment		
Burke County		Unclassifiable/Attainment		
Butts County		Unclassifiable/Attainment		
Calhoun County		Unclassifiable/Attainment		
Camden County		Unclassifiable/Attainment		
Candler County		Unclassifiable/Attainment		
Carroll County		Unclassifiable/Attainment		
Catoosa County		Unclassifiable/Attainment		
Charlton County		Unclassifiable/Attainment		
Chatham County		Unclassifiable/Attainment		
Chattahoochee County		Unclassifiable/Attainment		
Chattooga County		Unclassifiable/Attainment		
Clarke County		Unclassifiable/Attainment		
Clay County		Unclassifiable/Attainment		
Clinch County		Unclassifiable/Attainment		
Coffee County		Unclassifiable/Attainment		
Colquitt County		Unclassifiable/Attainment		
Columbia County		Unclassifiable/Attainment		
Cook County		Unclassifiable/Attainment		
Crawford County		Unclassifiable/Attainment		
Crisp County		Unclassifiable/Attainment		
Dade County		Unclassifiable/Attainment		
Dawson County		Unclassifiable/Attainment		
Decatur County		Unclassifiable/Attainment		
Dodge County		Unclassifiable/Attainment		
Dooly County		Unclassifiable/Attainment		
Dougherty County		Unclassifiable/Attainment		
Early County		Unclassifiable/Attainment		
Echols County		Unclassifiable/Attainment		
Effingham County		Unclassifiable/Attainment		
Elbert County		Unclassifiable/Attainment		
Emanuel County		Unclassifiable/Attainment		
Evans County		Unclassifiable/Attainment		
Fannin County		Unclassifiable/Attainment		
Floyd County		Unclassifiable/Attainment		
Franklin County		Unclassifiable/Attainment		
Gilmer County		Unclassifiable/Attainment		
Glascock County		Unclassifiable/Attainment		
Glynn County		Unclassifiable/Attainment		
Gordon County		Unclassifiable/Attainment		
Grady County		Unclassifiable/Attainment		
Greene County		Unclassifiable/Attainment		
Habersham County		Unclassifiable/Attainment		
Hall County		Unclassifiable/Attainment		
Hancock County		Unclassifiable/Attainment		
Haralson County		Unclassifiable/Attainment		
Harris County		Unclassifiable/Attainment		
Hart County		Unclassifiable/Attainment		
Heard County		Unclassifiable/Attainment		
Houston County		Unclassifiable/Attainment		
Irwin County		Unclassifiable/Attainment		
Jackson County		Unclassifiable/Attainment		
Jasper County		Unclassifiable/Attainment		

Georgia—2008 8-Hour Ozone NAAQS (Primary and secondary)

Designated area	Designation		Classification	
	Date [1]	Type	Date [1]	Type
Jeff Davis County		Unclassifiable/Attainment		
Jefferson County		Unclassifiable/Attainment		
Jenkins County		Unclassifiable/Attainment		
Johnson County		Unclassifiable/Attainment		
Jones County		Unclassifiable/Attainment		
Lamar County		Unclassifiable/Attainment		
Lanier County		Unclassifiable/Attainment		
Laurens County		Unclassifiable/Attainment		
Lee County		Unclassifiable/Attainment		
Liberty County		Unclassifiable/Attainment		
Lincoln County		Unclassifiable/Attainment		
Long County		Unclassifiable/Attainment		
Lowndes County		Unclassifiable/Attainment		
Lumpkin County		Unclassifiable/Attainment		
McDuffie County		Unclassifiable/Attainment		
McIntosh County		Unclassifiable/Attainment		
Macon County		Unclassifiable/Attainment		
Madison County		Unclassifiable/Attainment		
Marion County		Unclassifiable/Attainment		
Meriwether County		Unclassifiable/Attainment		
Miller County		Unclassifiable/Attainment		
Mitchell County		Unclassifiable/Attainment		
Monroe County		Unclassifiable/Attainment		
Montgomery County		Unclassifiable/Attainment		
Morgan County		Unclassifiable/Attainment		
Murray County		Unclassifiable/Attainment		
Muscogee County		Unclassifiable/Attainment		
Oconee County		Unclassifiable/Attainment		
Oglethorpe County		Unclassifiable/Attainment		
Peach County		Unclassifiable/Attainment		
Pickens County		Unclassifiable/Attainment		
Pierce County		Unclassifiable/Attainment		
Pike County		Unclassifiable/Attainment		
Polk County		Unclassifiable/Attainment		
Pulaski County		Unclassifiable/Attainment		
Putnam County		Unclassifiable/Attainment		
Quitman County		Unclassifiable/Attainment		
Rabun County		Unclassifiable/Attainment		
Randolph County		Unclassifiable/Attainment		
Richmond County		Unclassifiable/Attainment		
Schley County		Unclassifiable/Attainment		
Screven County		Unclassifiable/Attainment		
Seminole County		Unclassifiable/Attainment		
Spalding County		Unclassifiable/Attainment		
Stephens County		Unclassifiable/Attainment		
Stewart County		Unclassifiable/Attainment		
Sumter County		Unclassifiable/Attainment		
Talbot County		Unclassifiable/Attainment		
Taliaferro County		Unclassifiable/Attainment		
Tattnall County		Unclassifiable/Attainment		
Taylor County		Unclassifiable/Attainment		
Telfair County		Unclassifiable/Attainment		
Terrell County		Unclassifiable/Attainment		
Thomas County		Unclassifiable/Attainment		
Tift County		Unclassifiable/Attainment		
Toombs County		Unclassifiable/Attainment		
Towns County		Unclassifiable/Attainment		
Treutlen County		Unclassifiable/Attainment		
Troup County		Unclassifiable/Attainment		
Turner County		Unclassifiable/Attainment		
Twiggs County		Unclassifiable/Attainment		
Union County		Unclassifiable/Attainment		
Upson County		Unclassifiable/Attainment		
Walker County		Unclassifiable/Attainment		
Walton County		Unclassifiable/Attainment		
Ware County		Unclassifiable/Attainment		
Warren County		Unclassifiable/Attainment		
Washington County		Unclassifiable/Attainment		
Wayne County		Unclassifiable/Attainment		
Webster County		Unclassifiable/Attainment		
Wheeler County		Unclassifiable/Attainment		

Georgia—2008 8-Hour Ozone NAAQS (Primary and secondary)

Designated area	Designation		Classification	
	Date [1]	Type	Date [1]	Type
White County	.....	Unclassifiable/Attainment		
Whitfield County	.....	Unclassifiable/Attainment		
Wilcox County	.....	Unclassifiable/Attainment		
Wilkes County	.....	Unclassifiable/Attainment		
Wilkinson County	.....	Unclassifiable/Attainment		
Worth County	.....	Unclassifiable/Attainment		

[1] This date is July 20, 2012, unless otherwise noted.
[2] Excludes Indian country located in each area, unless otherwise noted.
[3] Includes any Indian country in each county or area, unless otherwise specified.

* * * * *

§ 81.312 Hawaii.

Hawaii—TSP

Designated area	Does not meet primary standards	Does not meet secondary standards	Cannot be classified	Better than national standards
Hawaii Island	.....	.....	X [1]	
Rest of the State	.....	.....	.....	X

Hawaii—SO_2

Designated area	Does not meet primary standards	Does not meet secondary standards	Cannot be classified	Better than national standards
Whole State	.....	.....	.....	X

[1] EPA designation replaces State designation.

Hawaii—Carbon Monoxide

Designated Area	Designation		Classification	
	Date [1]	Type	Date [1]	Type
Statewide	.....	Unclassifiable/Attainment		
Hawaii County				
Honolulu County				
Kalawao				
Kauai County				
Maui County				

[1] This date is November 15, 1990, unless otherwise noted.

Hawaii—Ozone (1-Hour Standard)[2]

Designated area	Designation		Classification	
	Date[1]	Type	Date[1]	Type
Statewide	.....	Unclassifiable/Attainment		
Hawaii County				
Honolulu County				
Kalawao				
Kauai County				
Maui County				

[1] This date is October 18, 2000, unless otherwise noted.
[2] The 1-hour ozone standard is revoked effective June 15, 2005 for all areas in Hawaii.

Hawaii—NO_2 (1971 Annual Standard)

Designated area	Does not meet primary standards	Cannot be classified or better than national standards
Whole State	.....	X

Hawaii—NO_2 (2010 1-Hour Standard)

Designated area	Designation [a]	
	Date [1]	Type
Hawaii County		Unclassifiable/Attainment.
Honolulu County		Unclassifiable/Attainment.
Kalawao County		Unclassifiable/Attainment.
Kauai County		Unclassifiable/Attainment.
Maui County		Unclassifiable/Attainment.

[a] Includes Indian Country located in each county or area, except as otherwise specified.
[1] This date is 90 days after October 31, 2011, unless otherwise noted.

Hawaii—Ozone (8-Hour Standard)

Designated area	Designation [a]		Category/classification	
	Date [1]	Type	Date [1]	Type
Statewide		Unclassifiable Attainment		
Hawaii County				
Honolulu County				
Kalawao County				
Kauai County				
Maui County				

[a] Includes Indian Country located in each county or area, except as otherwise specified.
[1] This date is June 15, 2004, unless otherwise noted.

Hawaii—$PM_{2.5}$ (Annual NAAQS)

Designated area	Designation [a]	
	Date [1]	Type
Statewide:		
Hawaii County		Unclassifiable/Attainment.
Honolulu County		Unclassifiable/Attainment.
Kalawao County		Unclassifiable/Attainment.
Kauai County		Unclassifiable/Attainment.
Maui County		Unclassifiable/Attainment.

[a] Includes Indian Country located in each county or area, except as otherwise specified.
[1] This date is 90 days after January 5, 2005, unless otherwise noted.

Hawaii—$PM_{2.5}$ [24-hour NAAQS]

Designated area	Designation for the 1997 NAAQS [a]		Designation for the 2006 NAAQS [a]	
	Date [1]	Type	Date [2]	Type
Statewide:				
Hawaii County		Unclassifiable/Attainment.		Unclassifiable/Attainment.
Honolulu County		Unclassifiable/Attainment.		Unclassifiable/Attainment.
Kalawao County		Unclassifiable/Attainment.		Unclassifiable/Attainment.
Kauai County		Unclassifiable/Attainment.		Unclassifiable/Attainment.
Maui County		Unclassifiable/Attainment.		Unclassifiable/Attainment.

[a] Includes Indian Country located in each county or area, except as otherwise specified.
[1] This date is 90 days after January 5, 2005, unless otherwise noted.
[2] This date is 30 days after November 13, 2009, unless otherwise noted.

Hawaii—2008 Lead NAAQS

Designated area	Designation for the 2008 NAAQS [a]	
	Date [1]	Type
Whole State		Unclassifiable/Attainment.

[a] Includes Indian Country located in each county or area, except as otherwise specified.
[1] December 31, 2011 unless otherwise noted.

[43 FR 8964, Mar. 3, 1978, as amended at 44 FR 53084, Sept. 12, 1979; 50 FR 46437, Nov. 8, 1985; 56 FR 56746; Nov. 6, 1991; 63 FR 31039, June 5, 1998; 65 FR 45219, July 20, 2000; 69 FR 23897, Apr. 30, 2004; 70 FR 967, Jan. 5, 2005; 70 FR 44475, Aug. 3, 2005; 74 FR 58724, Nov. 13, 2009; 76 FR 72108, Nov. 22, 2011; 77 FR 9550, Feb. 17, 2012]

EFFECTIVE DATE NOTE: At 77 FR 30115, May 21, 2012, § 81.312 was amended by revising the table heading for ''Hawaii—Ozone (8-Hour Standard)'' to read ''Hawaii—1997 8-Hour Ozone NAAQS (Primary and Secondary)''; and by adding a new table entitled ''Hawaii—2008 8-Hour Ozone NAAQS (Primary and Secondary)'' following the newly designated table ''Hawaii—1997 8-Hour Ozone NAAQS (Primary and Secondary)'', effective July 20, 2012. For the convenience of the user, the added text is set forth as follows:

§ 81.312 Hawaii.

* * * * *

Hawaii—2008 8-Hour Ozone NAAQS (Primary and secondary)

Designated area [2]	Designation		Classification	
	Date [1]	Type	Date [1]	Type
Hawaii County		Unclassifiable/Attainment		
Honolulu County		Unclassifiable/Attainment		
Kalawao County		Unclassifiable/Attainment		
Kauai County		Unclassifiable/Attainment		
Maui County		Unclassifiable/Attainment		

[1] This date is July 20, 2012, unless otherwise noted.
[2] Includes any Indian country in each county or area, unless otherwise specified.

* * * * *

§ 81.313 Idaho.

Idaho—SO_2

Designated area	Does not meet primary standards	Does not meet secondary standards	Cannot be classified	Better than national standards
Eastern Idaho Intrastate AQCR 61:				
Pocatello				X
Remainder of AQCR 61				X
Eastern Washington-Northern Idaho Interstate AQCR 62 (Idaho Portion):				
Silver Valley (Shoshone County)			X	
Remainder of AQCR 62 (Idaho Portion)				X
Idaho Intrastate AQCR 63				X
Metropolitan Boise Intrastate AQCR 64				X

Idaho—Carbon Monoxide

Designated Area	Designation		Classification	
	Date [1]	Type	Date [1]	Type
Boise—Northern Ada County Area:				

Idaho—Carbon Monoxide

Designated Area	Designation		Classification	
	Date [1]	Type	Date [1]	Type
The Boise-Ada County nonattainment area is described as follows: Beginning at a point in the center of the channel of the Boise River which the section line between sections fifteen (15) and sixteen (16), Township three (3) north, range four (4) east crosses said river; thence down the center of the channel of the Boise River to a point opposite the mouth of Mores Creek. Thence in a straight line north forty four (44) degrees and 36 minutes west until the said line intersects the north line of Township five (5) north (12 Ter. Ses. 67); thence west to the northwest corner of Township five (5) north, range one (1) west; thence southerly to the northwest corner of Township three (3) north, range one (1) west; thence east to the northwest corner of Section four (4) township three (3) north, range one (1) west; thence south to the southeast corner of section thirty-two (32), township two (2) north, range one (1) west; thence, west to the northwest corner township one (1) north, range one (1) west; thence southerly to the southwest corner of township one (1) north, range one (1) west; thence east to the southwest corner of section thirty-three (33), township one (1) north, range four (4) east; thence in a northerly direction along the north and south centerline of township one (1), two (2) and three (3) north, range four (4) east, Boise Meridian, to a point in the center of the channel of the Boise River where the section line between section fifteen (15) and sixteen (16) township three (3) north, range four (4) east, Boise Meridian crosses said Boise River, the point of beginning	12/27/02	Attainment.		
AQCR 61 Eastern Idaho Intrastate	.....	Unclassifiable/Attainment		
Bannock County				
Bear Lake County				
Bingham County				
Bonneville County				
Butte County				
Caribou County				
Clark County				
Franklin County				
Fremont County				
Jefferson County				
Madison County				
Oneida County				
Power County				
Teton County				
AQCR 62 Eastern Washington N Idaho Interstate	.....	Unclassifiable/Attainment		
Benewah County				
Kootenai County				
Latah County				
Nez Perce County				
Shoshone County				
AQCR 63 Idaho Intrastate	.....	Unclassifiable/Attainment		
Adams County				
Blaine County				
Boise County				
Bonner County				
Boundary County				
Camas County				
Cassia County				
Clearwater County				
Custer County				

Idaho—Carbon Monoxide

Designated Area	Designation		Classification	
	Date [1]	Type	Date [1]	Type
Elmore County				
Gem County				
Gooding County				
Idaho County				
Jerome County				
Lemhi County				
Lewis County				
Lincoln County				
Minidoka County				
Owyhee County				
Payette County				
Twin Falls County				
Valley County				
Washington County				
AQCR 64 Metropolitan Boise Intrastate (Remainder of).	.....	Unclassifiable/Attainment		
Ada County (part)				
Remainder of County				
Canyon County				

[1] This date is November 15, 1990, unless otherwise noted.

Idaho—Ozone (1-Hour Standard)[2]

Designated area	Designation		Classification	
	Date[1]	Type	Date[1]	Type
AQCR 61 Eastern Idaho Intrastate	.....	Unclassifiable/Attainment		
Bannock County				
Bear Lake County				
Bingham County				
Bonneville County				
Butte County				
Caribou County				
Clark County				
Franklin County				
Fremont County				
Jefferson County				
Madison County				
Oneida County				
Power County				
Teton County				
AQCR 62 E Washington-N Idaho Interstate	.....	Unclassifiable/Attainment		
Benewah County				
Kootenai County				
Latah County				
Nez Perce County				
Shoshone County				
AQCR 63 Idaho Intrastate	.....	Unclassifiable/Attainment		
Adams County				
Blaine County				
Boise County				
Bonner County				
Boundary County				
Camas County				
Cassia County				
Clearwater County				
Custer County				
Elmore County				
Gem County				
Gooding County				
Idaho County				
Jerome County				
Lemhi County				
Lewis County				
Lincoln County				
Minidoka County				
Owyhee County				
Payette County				
Twin Falls County				
Valley County				

Idaho—Ozone (1-Hour Standard)[2]

Designated area	Designation		Classification	
	Date[1]	Type	Date[1]	Type
Washington County AQCR 64 Metropolitan Boise Interstate ..... Ada County Canyon County	.....	Unclassifiable/Attainment		

[1] This date is October 18, 2000, unless otherwise noted.
[2] The 1-hour ozone standard is revoked effective June 15, 2005 for all areas in Idaho.

Idaho PM–10

Designated area	Designation		Classification	
	Date	Type	Date	Type
Eastern Idaho IntraState AQCR 61:	08/14/06	Attainment.		
Power-Bannock Counties, part of: (Pocatello).				
State Lands-Portneuf Valley Area:				
T.5S, R.34E Sections 25–36				
T.5S, R.35E Section 31				
T.6S, R.34E Sections 1–36				
T.6S, R.35E Sections 5–9, 16–21, 28–33, plus the west ½ of sections 10, 15, 22, 27, 34				
T.7S, R.34E Sections 1–4, 10–14, and 24				
T.7S, R.35E Sections 4–9, 16–21, 28–33, plus the west ½ of sections 3, 10, 15, 22, 27, 34				
T.8S, R.35E Section 4 plus the west ½ of section 3				
Power-Bannock Counties, part of: (Pocatello) ...	11/15/90	Nonattainment	11/15/90	Moderate
Fort Hall Indian Reservation:				
T.5S, R.34E Sections 15–23				
T.5S, R.33E Sections 13–36				
T.6S, R.33E Sections 1–36				
T.7S, R.33E Sections 4, 5, 6				
T.7S, R.34E Section 8				
Pocatello: 336 square mile area from Schiller at the northwest to Inkom at southeast, excluding the Portneuf Valley and Fort Hall nonattainment areas.	11/15/90	Unclassifiable		
Soda Springs: 96 square mile area encompassing Soda Springs, Conda and the industrial area in between.	11/15/90	Unclassifiable		
Remainder of AQCR 61	11/15/90	Unclassifiable		
Eastern Washington-Northern Idaho Interstate AQCR 62 (Idaho portion):				
Shoshone County: Pinehurst Expansion Area Northwest quarter of the Northwest quarter, Section 8, Township 48 North, Range 2 East; Southwest quarter of the Northwest quarter, Section 8, Township 48, North, Range 2 East; Northwest quarter of the Southwest quarter, Section 8, Township 48 North, Range 2 East; Southwest quarter, Section 8, Township 48 North, Range 2 East; Southwest quarter of the Southwest quarter, Section 48 North, Range 2 East, Boise Base (known as "Pinehurst expansion area").	1/20/94	Nonattainment	1/20/94	Moderate.
City of Pinehurst	11/15/90	Nonattainment	11/15/90	Moderate.
Silver Valley (Shoshone County), excluding the Pinehurst Expansion Area and City of Pinehurst PM–10 nonattainment areas.	11/15/90	Unclassifiable		
Lewiston	11/15/90	Unclassifiable		
Remainder of AQCR 62 (Idaho portion)	11/15/90	Unclassifiable		
Idaho Intrastate AQCR 63:				

Idaho PM–10

Designated area	Designation		Classification	
	Date	Type	Date	Type
Bonner County: Sandpoint Area: Section 1–3, 9–12, 15, 16, 21, 22, 27, 28 of range 2 west and Township 57 north; and the western ¾ of Sections 14, 23 and 26 of the same Township and range coordinates.	11/15/90	Nonattainment	11/15/90	Moderate.
Remainder of AQCR 63	11/15/90	Unclassifiable		
Metropolitan Boise the Intrastate AQCR 64:				
Ada County: Boise—Northern Boundary—Beginning at a point in the center of the channel of the Boise River, where the line between sections 15 and 16 in Township 3 north (T3N), range 4 east (R4E), crosses said Boise river; thence, west down the center of the channel of the Boise River to a point opposite the mouth of More's Creek; thence, in a straight line north 44 degrees and 38 minutes west until the said line intersects the north line T5N (12 Ter. Ses. 67); thence west to the northwest corner T5N, R1W Western Boundary—Thence, south to the northwest corner of T3N, R1W; thence east to the northwest corner of section 4 of T3N, R1W; thence south to the southeast corner of section 32 of T2N, R1W; thence, west to the northwest corner of T1N, R1W; thence, south to the southwest corner of section 32 of T2N, R1W; thence, west to the northwest corner of T1N, R1W; thence south to the southwest corner of T1N, R1W Southern Boundary—Thence, east to the southwest corner of section 33 of T1N, R4E Eastern Boundary—Thence, north along the north and south center line of Townships T1N, R4E, T2N, R4E, and T3N, R4E, Boise Meridian to the beginning point in the center of the channel of the Boise River..	12/26/2003	Attainment		
Remainder of AQCR 64	11/15/90	Unclassifiable.		

Idaho—NO_2 (1971 Annual Standard)

Designated area	Does not meet primary standards	Cannot be classified or better than national standards
Eastern Idaho Intrastate AQCR 61		X
Eastern Washington-Northern Idaho Interstate AQCR 62 (Idaho Portion)		X
Idaho Intrastate AQCR 63		X
Metropolitan Boise Intrastate AQCR 64		X

Idaho—NO_2 (2010 1-Hour Standard)

Designated area	Designation [a]	
	Date [1]	Type
AQCR 61 Eastern Idaho Intrastate:		
Bannock County		Unclassifiable/Attainment.
Bear Lake County		Unclassifiable/Attainment.
Bingham County		Unclassifiable/Attainment.
Bonneville County		Unclassifiable/Attainment.
Butte County		Unclassifiable/Attainment.
Caribou County		Unclassifiable/Attainment.
Clark County		Unclassifiable/Attainment.
Franklin County		Unclassifiable/Attainment.
Fremont County		Unclassifiable/Attainment.
Jefferson County		Unclassifiable/Attainment.
Madison County		Unclassifiable/Attainment.

Idaho—NO_2 (2010 1-Hour Standard)

Designated area	Designation [a]	
	Date [1]	Type
Oneida County		Unclassifiable/Attainment.
Power County		Unclassifiable/Attainment.
Teton County		Unclassifiable/Attainment.
AQCR 62 E Washington-N Idaho Interstate:		
Benewah County		Unclassifiable/Attainment.
Kootenai County		Unclassifiable/Attainment.
Latah County		Unclassifiable/Attainment.
Nez Perce County		Unclassifiable/Attainment.
Shoshone County		Unclassifiable/Attainment.
AQCR 63 Idaho Interstate:		
Adams County		Unclassifiable/Attainment.
Blaine County		Unclassifiable/Attainment.
Boise County		Unclassifiable/Attainment.
Bonner County		Unclassifiable/Attainment.
Boundary County		Unclassifiable/Attainment.
Camas County		Unclassifiable/Attainment.
Cassia County		Unclassifiable/Attainment.
Clearwater County		Unclassifiable/Attainment.
Custer County		Unclassifiable/Attainment.
Elmore County		Unclassifiable/Attainment.
Gem County		Unclassifiable/Attainment.
Gooding County		Unclassifiable/Attainment.
Idaho County		Unclassifiable/Attainment.
Jerome County		Unclassifiable/Attainment.
Lewis County		Unclassifiable/Attainment.
Lincoln County		Unclassifiable/Attainment.
Minidoka County		Unclassifiable/Attainment.
Owyhee County		Unclassifiable/Attainment.
Payette County		Unclassifiable/Attainment.
Twin Falls County		Unclassifiable/Attainment.
Valley County		Unclassifiable/Attainment.
Washington County		Unclassifiable/Attainment.
AQCR 64 Metropolitan Boise Interstate:		
Ada County		Unclassifiable/Attainment.
Canyon County		Unclassifiable/Attainment.

[a] Includes Indian Country located in each county or area, except as otherwise specified.
[1] This date is 90 days after October 31, 2011, unless otherwise noted.

Idaho—Ozone (8-Hour Standard)

Designated area	Designation [a]		Category/classification	
	Date [1]	Type	Date [1]	Type
AQCR 61 Eastern Idaho Intrastate		Unclassifiable/Attainment		
Bannock County				
Bear Lake County				
Bingham County				
Bonneville County				
Butte County				
Caribou County				
Clark County				
Franklin County				
Fremont County				
Jefferson County				
Madison County				
Oneida County				
Power County				
Teton County				
AQCR 62 E Washington-N Idaho Interstate		Unclassifiable/Attainment		
Benewah County				
Kootenai County				
Latah County				
Nez Perce County				
Shoshone County				
AQCR 63 Idaho Intrastate		Unclassifiable/Attainment		
Adams County				
Blaine County				
Boise County				
Bonner County				
Boundary County				

Idaho—Ozone (8-Hour Standard)

Designated area	Designation [a]		Category/classification	
	Date [1]	Type	Date [1]	Type
Camas County				
Cassia County				
Clearwater County				
Custer County				
Elmore County				
Gem County				
Gooding County				
Idaho County				
Jerome County				
Lemhi County				
Lewis County				
Lincoln County				
Minidoka County				
Owyhee County				
Payette County				
Twin Falls County				
Valley County				
Washington County				
AQCR 64 Metropolitan Boise Interstate	.....	Unclassifiable/Attainment		
Ada County				
Canyon County				

[a] Includes Indian Country located in each county or area, except as otherwise specified.
[1] This date is June 15, 2004, unless otherwise noted.

Idaho—$PM_{2.5}$ (Annual NAAQS)

Designated area	Designation [a]	
	Date [1]	Type
AQCR 61 Eastern Idaho Intrastate:		
Bannock County	.....	Unclassifiable/Attainment.
Bear Lake County	.....	Unclassifiable/Attainment.
Bingham County	.....	Unclassifiable/Attainment.
Bonneville County	.....	Unclassifiable/Attainment.
Butte County	.....	Unclassifiable/Attainment.
Caribou County	.....	Unclassifiable/Attainment.
Clark County	.....	Unclassifiable/Attainment.
Franklin County	.....	Unclassifiable/Attainment.
Fremont County	.....	Unclassifiable/Attainment.
Jefferson County	.....	Unclassifiable/Attainment.
Madison County	.....	Unclassifiable/Attainment.
Oneida County	.....	Unclassifiable/Attainment.
Power County	.....	Unclassifiable/Attainment.
Teton County	.....	Unclassifiable/Attainment.
AQCR 62 E Washington-N Idaho Interstate:		
Benewah County	.....	Unclassifiable/Attainment.
Kootenai County	.....	Unclassifiable/Attainment.
Latah County	.....	Unclassifiable/Attainment.
Nez Perce County	.....	Unclassifiable/Attainment.
Shoshone County	.....	Unclassifiable/Attainment.
AQCR 63 Idaho Intrastate:		
Adams County	.....	Unclassifiable/Attainment.
Blaine County	.....	Unclassifiable/Attainment.
Boise County	.....	Unclassifiable/Attainment.
Bonner County	.....	Unclassifiable/Attainment.
Boundary County	.....	Unclassifiable/Attainment.
Camas County	.....	Unclassifiable/Attainment.
Cassia County	.....	Unclassifiable/Attainment.
Clearwater County	.....	Unclassifiable/Attainment.
Custer County	.....	Unclassifiable/Attainment.
Elmore County	.....	Unclassifiable/Attainment.
Gem County	.....	Unclassifiable/Attainment.
Gooding County	.....	Unclassifiable/Attainment.
Idaho County	.....	Unclassifiable/Attainment.
Jerome County	.....	Unclassifiable/Attainment.
Lemhi County	.....	Unclassifiable/Attainment.
Lewis County	.....	Unclassifiable/Attainment.
Lincoln County	.....	Unclassifiable/Attainment.
Minidoka County	.....	Unclassifiable/Attainment.
Owyhee County	.....	Unclassifiable/Attainment.

Idaho—$PM_{2.5}$ (Annual NAAQS)

Designated area	Designation [a]	
	Date [1]	Type
Payette County	.....	Unclassifiable/Attainment.
Twin Falls County	.....	Unclassifiable/Attainment.
Valley County	.....	Unclassifiable/Attainment.
Washington County	.....	Unclassifiable/Attainment.
AQCR 64 Metropolitan Boise Interstate:		
Ada County	.....	Unclassifiable/Attainment.
Canyon County	.....	Unclassifiable/Attainment.

[a] Includes Indian Country located in each county or area, except as otherwise specified.
[1] This date is 90 days after January 5, 2005, unless otherwise noted.

Idaho—$PM_{2.5}$ [24-hour NAAQS]

Designated area	Designation for the 1997 NAAQS [a]		Designation for the 2006 NAAQS [a]	
	Date [1]	Type	Date [2]	Type
Logan, UT-ID:				
Franklin County (part)	.....	Unclassifiable/Attainment.	.....	Nonattainment.
Begin in the bottom left corner (southwest) of the nonattainment area boundary, southwest corner of the PLSS-Boise Meridian, Township 16 South, Range 37 East, Section 25. The boundary then proceeds north to the northwest corner of Township 15 South, Range 37 East, Section 25; then the boundary proceeds east to the southeast corner of Township 15 South, Range 38 East, Section 19; then north to the Franklin County boundary at the northwest corner of Township 13 South, Range 38 East, Section 20. From this point the boundary proceeds east 3.5 sections along the northern border of the county boundary where it then turns south 2 sections, and then proceeds east 5 more sections, and then north 2 sections more. At this point, the boundary leaves the county boundary and proceeds east at the southeast corner of Township 13 South, Range 39 East, Section 14; then the boundary heads north 2 sections to northwest corner of Township 13 South, Range 39 east, Section 12; then the boundary proceeds east 2 sections to the northeast corner of Township 13 South, Range 40 East, Section 7. The boundary then proceeds south 2 sections to the northwest corner of Township 13 South, Range 40 East, Section 20; the boundary then proceeds east 6 sections to the northeast corner of Township 13 South, Range 41 East, Section 19. The boundary then proceeds south 20 sections to the southeast corner of Township 16 South, Range 41 East, Section 30. Finally, the boundary is completed as it proceeds west 20 sections along the southern Idaho state boundary to the southwest corner of the Township 16 South, Range 37 East, Section 25.				

Idaho—$PM_{2.5}$ [24-hour NAAQS]

Designated area	Designation for the 1997 NAAQS [a]		Designation for the 2006 NAAQS [a]	
	Date [1]	Type	Date [2]	Type
Rest of State: AQCR 61 Eastern Idaho Intrastate:				
Bannock County		Unclassifiable/Attainment.		Unclassifiable/Attainment.
Bear Lake County		Unclassifiable/Attainment.		Unclassifiable/Attainment.
Bingham County		Unclassifiable/Attainment.		Unclassifiable/Attainment.
Bonneville County		Unclassifiable/Attainment.		Unclassifiable/Attainment.
Butte County		Unclassifiable/Attainment.		Unclassifiable/Attainment.
Caribou County		Unclassifiable/Attainment.		Unclassifiable/Attainment.
Clark County		Unclassifiable/Attainment.		Unclassifiable/Attainment.
Franklin County (remainder)		Unclassifiable/Attainment.		Unclassifiable/Attainment.
Fremont County		Unclassifiable/Attainment.		Unclassifiable/Attainment.
Jefferson County		Unclassifiable/Attainment.		Unclassifiable/Attainment.
Madison County		Unclassifiable/Attainment.		Unclassifiable/Attainment.
Oneida County		Unclassifiable/Attainment.		Unclassifiable/Attainment.
Power County		Unclassifiable/Attainment.		Unclassifiable/Attainment.
Teton County		Unclassifiable/Attainment.		Unclassifiable/Attainment.
AQCR 62 E Washington-N Idaho Interstate:				
Benewah County		Unclassifiable/Attainment.		Unclassifiable/Attainment.
Kootenai County		Unclassifiable/Attainment.		Unclassifiable/Attainment.
Latah County		Unclassifiable/Attainment.		Unclassifiable/Attainment.
Nez Perce County		Unclassifiable/Attainment.		Unclassifiable/Attainment.
Shoshone County		Unclassifiable/Attainment.		Unclassifiable/Attainment.
AQCR 63 Idaho Intrastate:				
Adams County		Unclassifiable/Attainment.		Unclassifiable/Attainment.
Blaine County		Unclassifiable/Attainment.		Unclassifiable/Attainment.
Boise County		Unclassifiable/Attainment.		Unclassifiable/Attainment.
Bonner County		Unclassifiable/Attainment.		Unclassifiable/Attainment.
Boundary County		Unclassifiable/Attainment.		Unclassifiable/Attainment.
Camas County		Unclassifiable/Attainment.		Unclassifiable/Attainment.
Cassia County		Unclassifiable/Attainment.		Unclassifiable/Attainment.
Clearwater County		Unclassifiable/Attainment.		Unclassifiable/Attainment.
Custer County		Unclassifiable/Attainment.		Unclassifiable/Attainment.
Elmore County		Unclassifiable/Attainment.		Unclassifiable/Attainment.
Gem County		Unclassifiable/Attainment.		Unclassifiable/Attainment.
Gooding County		Unclassifiable/Attainment.		Unclassifiable/Attainment.
Idaho County		Unclassifiable/Attainment.		Unclassifiable/Attainment.
Jerome County		Unclassifiable/Attainment.		Unclassifiable/Attainment.

Idaho—$PM_{2.5}$ [24-hour NAAQS]

Designated area	Designation for the 1997 NAAQS [a]		Designation for the 2006 NAAQS [a]	
	Date [1]	Type	Date [2]	Type
Lemhi County		Unclassifiable/Attainment.		Unclassifiable/Attainment.
Lewis County		Unclassifiable/Attainment.		Unclassifiable/Attainment.
Lincoln County		Unclassifiable/Attainment.		Unclassifiable/Attainment.
Minidoka County		Unclassifiable/Attainment.		Unclassifiable/Attainment.
Owyhee County		Unclassifiable/Attainment.		Unclassifiable/Attainment.
Payette County		Unclassifiable/Attainment.		Unclassifiable/Attainment.
Twin Falls County		Unclassifiable/Attainment.		Unclassifiable/Attainment.
Valley County		Unclassifiable/Attainment.		Unclassifiable/Attainment.
Washington County		Unclassifiable/Attainment.		Unclassifiable/Attainment.
AQCR 64 Metropolitan Boise Interstate:				
Ada County		Unclassifiable/Attainment.		Unclassifiable/Attainment.
Canyon County		Unclassifiable/Attainment.		Unclassifiable/Attainment.

[a] Includes Indian Country located in each county or area, except as otherwise specified.
[1] This date is 90 days after January 5, 2005, unless otherwise noted.
[2] This date is 30 days after November 13, 2009, unless otherwise noted.

Idaho—2008 Lead NAAQS

Designated area	Designation for the 2008 NAAQS [a]	
	Date [1]	Type
Whole State		Unclassifiable/Attainment.

[a] Includes Indian Country located in each county or area, except as otherwise specified.
[1] December 31, 2011 unless otherwise noted.

[54 FR 27344, June 29, 1989]

EDITORIAL NOTE: For FEDERAL REGISTER citations affecting § 81.313 see the List of CFR Sections Affected, which appears in the Finding Aids section of the printed volume and at *www.fdsys.gov*.

EFFECTIVE DATE NOTE: At 77 FR 30116, May 21, 2012, § 81.313 was amended by revising the table heading for ''Idaho—Ozone (8-Hour Standard)'' to read ''Idaho—1997 8-Hour Ozone NAAQS (Primary and Secondary)''; by adding a new table entitled ''Idaho—2008 8-Hour Ozone NAAQS (Primary and Secondary)'' following the newly designated table '' Idaho—1997 8-Hour Ozone NAAQS (Primary and Secondary)'', effective July 20, 2012. For the convenience of the user, the added text is set forth as follows:

§ 81.313 Idaho.

* * * * *

Idaho—2008 8-Hour Ozone NAAQS (Primary and secondary)

Designated area [2]	Designation		Classification	
	Date [1]	Type	Date [1]	Type
Statewide and Any Areas of Indian Country		Unclassifiable/Attainment		

[1] This date is July 20, 2012, unless otherwise noted.

* * * * *

§ 81.314 Illinois.

Illinois—TSP

Designated area	Does not meet primary	Does not meet secondary	Cannot be classified	Better than national standards
Cook County:				
a. Lyons Township	X	X		
b. The area bounded on the north by 79th Street, on the west by Interstate 57 between Sibley Boulevard and Interstate 94 and by Interstate 94 between Interstate 57 and 79th Street, on the south by Sibley Boulevard, and on the east by the Illinois/Indiana State line	X	X		
LaSalle County:				
Those portions of LaSalle Township located in the following Townships, ranges, and sections: T33N, R1E, S24; T33N, R1E, S25; T33N, R2E, S30; T33N, R2E, S31; and T33N, R1E, S36	X	X		
Those portions of Deer Park Township located in the following Townships, ranges, and sections: T32N, R1E, S1; T32N, R2E, S6; T33N, R1E, S24; T33N, R1E, S25; T33N, R2E, S30; T33N, R2E, S31; and T33N, R1E, S36		X		
Madison County: Granite City Township and Nameoki Township	X	X		
All other portions of Illinois counties				X

Illinois—SO_2

Designated area	Does not meet primary standards	Does not meet secondary standards	Cannot be classified	Better than national standards
AQCR 65:				
Fulton County				X
Hancock County				X
Henderson County				X
Knox County				X
McDonough County				X
Mason County				X
Peoria County				X
Tazewell County				X
Warren County				X
Woodford County				X
Lee County				X
AQCR 66:				
Champaign County				X
Clark County				X
Coles County				X
Cumberland County				X
De Witt County				X
Douglas County				X
Edgar County				X
Ford County				X
Iroquois County				X
Livingston County				X
McLean County				X
Moultrie County				X
Platt County				X
Shelby County				X
Vermilion County				X
AQCR 67:				
Cook County:				
Bremer Twp			X	
Calumet Twp			X	
Thornton Twp			X	
Worth Twp			X	
All other Cook County twps				X
Will County:				
Channahon Twp			X	
Du Page Twp			X	
Joliet Twp			X	
Lockport Twp			X	
Troy Twp			X	
All other Will County twps				X

Illinois—SO_2

Designated area	Does not meet primary standards	Does not meet secondary standards	Cannot be classified	Better than national standards
Du Page County				X
Grundy County				X
Kane County				X
Kankakee County				X
Kendall County				X
Lake County				X
McHenry County				X
AQCR 68:				
Jo Daviess County				X
AQCR 69:				
Carroll County				X
Henry County				X
Mercer County				X
Rock Island County				X
Whiteside County				X
AQCR 70:				
Madison County:				
Wood River Twp			X	
Alton Twp			X	
All other Madison twps				X
Bond County				X
Clinton County				X
Monroe County				X
Randolph County				X
St. Clair County				X
Washington County				X
AQCR 71:				
Bureau County:				
Shelby Twp			X	
All other Bureau twps				X
La Salle County				X
Lee County				X
Marshall County				X
Putnam County				X
Stark County				X
AQCR 72:				
Massac County				X
Alexander County				X
Johnson County				X
Pope County				X
Pulaski County				X
Union County				X
AQCR 73				
Boone County				X
De Kalb County				X
Ogle County				X
Stephenson				X
Winnebago County				X
AQCR 74:				
Clay County				X
Crawford County				X
Edwards County				X
Effingham County				X
Fayette County				X
Franklin County				X
Gallatin County				X
Hamilton County				X
Hardin County				X
Jackson County				X
Jasper County				X
Jefferson County				X
Lawrence County				X
Marion County				X
Perry County				X
Richland County				X
Saline County				X
Wabash County				X
Wayne County				X
White County				X
Williamson County				X

Illinois—SO_2

Designated area	Does not meet primary standards	Does not meet secondary standards	Cannot be classified	Better than national standards
AQCR 75:				
Christian County:.				
South Fork Twp			X	
All other twps				X
Sangamon County:.				
Capital Twp			X	
Cooper Twp			X	
Cotton Hill Twp			X	
Rochester Twp			X	
Woodside Twp			X	
All other twps				X
Adams County				X
Brown County				X
Calhoun County				X
Cass County				X
Greene County				X
Jersey County				X
Logan County				X
Macon County				X
Nacoupin County				X
Menard County				X
Montgomery County				X
Morgan County				X
Pike County				X
Schuyler County				X
Scott County				X

Illinois—Carbon Monoxide

Designated Area	Designation		Classification	
	Date [1]	Type	Date [1]	Type
Adams County		Unclassifiable/Attainment		
Alexander County		Unclassifiable/Attainment		
Bond County		Unclassifiable/Attainment		
Boone County		Unclassifiable/Attainment		
Brown County		Unclassifiable/Attainment		
Bureau County		Unclassifiable/Attainment		
Calhoun County		Unclassifiable/Attainment		
Carroll County		Unclassifiable/Attainment		
Cass County		Unclassifiable/Attainment		
Champaign County		Unclassifiable/Attainment		
Christian County		Unclassifiable/Attainment		
Clark County		Unclassifiable/Attainment		
Clay County		Unclassifiable/Attainment		
Clinton County		Unclassifiable/Attainment		
Coles County		Unclassifiable/Attainment		
Cook County		Unclassifiable/Attainment		
Crawford County		Unclassifiable/Attainment		
Cumberland County		Unclassifiable/Attainment		
De Kalb County		Unclassifiable/Attainment		
De Witt County		Unclassifiable/Attainment		
Douglas County		Unclassifiable/Attainment		
Du Page County		Unclassifiable/Attainment		
Edgar County		Unclassifiable/Attainment		
Edwards County		Unclassifiable/Attainment		
Effingham County		Unclassifiable/Attainment		
Fayette County		Unclassifiable/Attainment		
Ford County		Unclassifiable/Attainment		
Franklin County		Unclassifiable/Attainment		
Fulton County		Unclassifiable/Attainment		
Gallatin County		Unclassifiable/Attainment		
Greene County		Unclassifiable/Attainment		
Grundy County		Unclassifiable/Attainment		
Hamilton County		Unclassifiable/Attainment		
Hancock County		Unclassifiable/Attainment		
Hardin County		Unclassifiable/Attainment		
Henderson County		Unclassifiable/Attainment		
Henry County		Unclassifiable/Attainment		

Illinois—Carbon Monoxide

Designated Area	Designation		Classification	
	Date [1]	Type	Date [1]	Type
Iroquois County		Unclassifiable/Attainment		
Jackson County		Unclassifiable/Attainment		
Jasper County		Unclassifiable/Attainment		
Jefferson County		Unclassifiable/Attainment		
Jersey County		Unclassifiable/Attainment		
Jo Daviess County		Unclassifiable/Attainment		
Johnson County		Unclassifiable/Attainment		
Kane County		Unclassifiable/Attainment		
Kankakee County		Unclassifiable/Attainment		
Kendall County		Unclassifiable/Attainment		
Knox County		Unclassifiable/Attainment		
Lake County		Unclassifiable/Attainment		
La Salle County		Unclassifiable/Attainment		
Lawrence County		Unclassifiable/Attainment		
Lee County		Unclassifiable/Attainment		
Livingston County		Unclassifiable/Attainment		
Logan County		Unclassifiable/Attainment		
Macon County		Unclassifiable/Attainment		
Macoupin County		Unclassifiable/Attainment		
Madison County		Unclassifiable/Attainment		
Marion County		Unclassifiable/Attainment		
Marshall County		Unclassifiable/Attainment		
Mason County		Unclassifiable/Attainment		
Massac County		Unclassifiable/Attainment		
McDonough County		Unclassifiable/Attainment		
McHenry County		Unclassifiable/Attainment		
McLean County		Unclassifiable/Attainment		
Menard County		Unclassifiable/Attainment		
Mercer County		Unclassifiable/Attainment		
Monroe County		Unclassifiable/Attainment		
Montgomery County		Unclassifiable/Attainment		
Morgan County		Unclassifiable/Attainment		
Moultrie County		Unclassifiable/Attainment		
Ogle County		Unclassifiable/Attainment		
Peoria County		Unclassifiable/Attainment		
Perry County		Unclassifiable/Attainment		
Piatt County		Unclassifiable/Attainment		
Pike County		Unclassifiable/Attainment		
Pope County		Unclassifiable/Attainment		
Pulaski County		Unclassifiable/Attainment		
Putnam County		Unclassifiable/Attainment		
Randolph County		Unclassifiable/Attainment		
Richland County		Unclassifiable/Attainment		
Rock Island County		Unclassifiable/Attainment		
St. Clair County		Unclassifiable/Attainment		
Saline County		Unclassifiable/Attainment		
Sangamon County		Unclassifiable/Attainment		
Schuyler County		Unclassifiable/Attainment		
Scott County		Unclassifiable/Attainment		
Shelby County		Unclassifiable/Attainment		
Stark County		Unclassifiable/Attainment		
Stephenson County		Unclassifiable/Attainment		
Tazewell County		Unclassifiable/Attainment		
Union County		Unclassifiable/Attainment		
Vermilion County		Unclassifiable/Attainment		
Wabash County		Unclassifiable/Attainment		
Warren County		Unclassifiable/Attainment		
Washington County		Unclassifiable/Attainment		
Wayne County		Unclassifiable/Attainment		
White County		Unclassifiable/Attainment		
Whiteside County		Unclassifiable/Attainment		
Will County		Unclassifiable/Attainment		
Williamson County		Unclassifiable/Attainment		
Winnebago County		Unclassifiable/Attainment		
Woodford County		Unclassifiable/Attainment		

[1] This date is November 15, 1990, unless otherwise noted.

Illinois—Ozone (1-Hour Standard)[3]

Designated area	Designation		Classification	
	Date[1]	Type	Date[1]	Type
Chicago-Gary-Lake County Area:				
Cook County	11/15/90	Nonattainment	11/15/90	Severe-17.
Du Page County	11/15/90	Nonattainment	11/15/90	Severe-17.
Grundy County (part)				
Aux Sable Township	11/15/90	Nonattainment	11/15/90	Severe-17.
Goose Lake Township	11/15/90	Nonattainment	11/15/90	Severe-17.
Kane County	11/15/90	Nonattainment	11/15/90	Severe-17.
Kendall County (part)				
Oswego Township	11/15/90	Nonattainment	11/15/90	Severe-17.
Lake County	11/15/90	Nonattainment	11/15/90	Severe-17.
McHenry County	11/15/90	Nonattainment	11/15/90	Severe-17.
Will County	11/15/90	Nonattainment	11/15/90	Severe-17.
Jersey County Area:				
Jersey County		Attainment[2]		
St. Louis Area:				
Madison County	5/12/03	Attainment		
Monroe County	5/12/03	Attainment		
St. Clair County	5/12/03	Attainment		
Adams County		Unclassifiable/Attainment		
Alexander County		Unclassifiable/Attainment		
Bond County		Unclassifiable/Attainment		
Boone County		Unclassifiable/Attainment		
Brown County		Unclassifiable/Attainment		
Bureau County		Unclassifiable/Attainment		
Calhoun County		Unclassifiable/Attainment		
Carroll County		Unclassifiable/Attainment		
Cass County		Unclassifiable/Attainment		
Champaign County		Unclassifiable/Attainment		
Christian County		Unclassifiable/Attainment		
Clark County		Unclassifiable/Attainment		
Clay County		Unclassifiable/Attainment		
Clinton County		Unclassifiable/Attainment		
Coles County		Unclassifiable/Attainment		
Crawford County		Unclassifiable/Attainment		
Cumberland County		Unclassifiable/Attainment		
De Kalb County		Unclassifiable/Attainment		
De Witt County		Unclassifiable/Attainment		
Douglas County		Unclassifiable/Attainment		
Edgar County		Unclassifiable/Attainment		
Edwards County		Unclassifiable/Attainment		
Effingham County		Unclassifiable/Attainment		
Fayette County		Unclassifiable/Attainment		
Ford County		Unclassifiable/Attainment		
Franklin County		Unclassifiable/Attainment		
Fulton County		Unclassifiable/Attainment		
Gallatin County		Unclassifiable/Attainment		
Greene County		Unclassifiable/Attainment		
Grundy County (part) All townships except Aux Sable and Goose Lake.		Unclassifiable/Attainment		
Hamilton County		Unclassifiable/Attainment		
Hancock County		Unclassifiable/Attainment		
Hardin County		Unclassifiable/Attainment		
Henderson County		Unclassifiable/Attainment		
Henry County		Unclassifiable/Attainment		
Iroquois County		Unclassifiable/Attainment		
Jackson County		Unclassifiable/Attainment		
Jasper County		Unclassifiable/Attainment		
Jefferson County		Unclassifiable/Attainment		
Jo Daviess County		Unclassifiable/Attainment		
Johnson County		Unclassifiable/Attainment		
Kankakee County		Unclassifiable/Attainment		
Kendall County (part) All townships except Oswego		Unclassifiable/Attainment		
Knox County		Unclassifiable/Attainment		
La Salle County		Unclassifiable/Attainment		
Lawrence County		Unclassifiable/Attainment		
Lee County		Unclassifiable/Attainment		
Livingston County		Unclassifiable/Attainment		
Logan County		Unclassifiable/Attainment		
Macon County		Unclassifiable/Attainment		
Macoupin County		Unclassifiable/Attainment		
Marion County		Unclassifiable/Attainment		

Illinois—Ozone (1-Hour Standard)[3]

Designated area	Designation		Classification	
	Date[1]	Type	Date[1]	Type
Marshall County		Unclassifiable/Attainment		
Mason County		Unclassifiable/Attainment		
Massac County		Unclassifiable/Attainment		
McDonough County		Unclassifiable/Attainment		
McLean County		Unclassifiable/Attainment		
Menard County		Unclassifiable/Attainment		
Mercer County		Unclassifiable/Attainment		
Montgomery County		Unclassifiable/Attainment		
Morgan County		Unclassifiable/Attainment		
Moultrie County		Unclassifiable/Attainment		
Ogle County		Unclassifiable/Attainment		
Peoria County		Unclassifiable/Attainment		
Perry County		Unclassifiable/Attainment		
Piatt County		Unclassifiable/Attainment		
Pike County		Unclassifiable/Attainment		
Pope County		Unclassifiable/Attainment		
Pulaski County		Unclassifiable/Attainment		
Putnam County		Unclassifiable/Attainment		
Randolph County		Unclassifiable/Attainment		
Richland County		Unclassifiable/Attainment		
Rock Island County		Unclassifiable/Attainment		
Saline County		Unclassifiable/Attainment		
Sangamon County		Unclassifiable/Attainment		
Schuyler County		Unclassifiable/Attainment		
Scott County		Unclassifiable/Attainment		
Shelby County		Unclassifiable/Attainment		
Stark County		Unclassifiable/Attainment		
Stephenson County		Unclassifiable/Attainment		
Tazewell County		Unclassifiable/Attainment		
Union County		Unclassifiable/Attainment		
Vermilion County		Unclassifiable/Attainment		
Wabash County		Unclassifiable/Attainment		
Warren County		Unclassifiable/Attainment		
Washington County		Unclassifiable/Attainment		
Wayne County		Unclassifiable/Attainment		
White County		Unclassifiable/Attainment		
Whiteside County		Unclassifiable/Attainment		
Williamson County		Unclassifiable/Attainment		
Winnebago County		Unclassifiable/Attainment		
Woodford County		Unclassifiable/Attainment		

[1] This date is October 18, 2000, unless otherwise noted.
[2] April 13, 1995.
[3] The 1-hour ozone standard is revoked effective June 15, 2005 for all areas in Illinois. The Jersey Co. and St. Louis areas are maintenance areas for the 1-hour NAAQS for purposes of 40 CFR part 51 subpart X.

Illinois—PM–10

Designated area	Designation		Classification	
	Date	Type	Date	Type
Cook County				
a. Lyons Township	11/21/05	Attainment.		
b. The area bounded on the north by 79th Street, on the west by Interstate 57 between Sibley Boulevard and Interstate 94 and by Interstate 94 between Interstate 57 and 79th Street, on the south by Sibley Boulevard, and on the east by the Illinois/Indiana State line	11/21/05	Attainment.		
LaSalle County	10/7/96	Attainment		
Oglesby including the following Townships, ranges, and sections: T32N, R1E, S1; T32N, R2E, S6; T33N, R1E, S24; T33N, R1E, S25; T33N, R2E, S30; T33N, R2E, S31; and T33N, R1E, S36				
Madison County				
Granite City Township and Nameoki Township	5/11/98	Attainment.		
Rest of State	11/15/90	Unclassifiable.		

Illinois—NO_2 (1971 Annual Standard)

Designated area	Does not meet primary standards	Cannot be classified or better than national standards
AQCR 65:		
Fulton County		X
Hancock County		X
Henderson County		X
Knox County		X
McDonough County		X
Mason County		X
Peoria County		X
Tazewell County		X
Warren County		X
Woodford County		X
Lee County		X
AQCR 66:		
Champaign County		X
Clark County		X
Coles County		X
Cumberland County		X
De Witt County		X
Douglas County		X
Edgar County		X
Ford County		X
Iroquois County		X
Livingston County		X
McLean County		X
Moultrie County		X
Piatt County		X
Shelby County		X
Vermilion County		X
AQCR 67:		
Cook County		X
Du Page County		X
Grundy County		X
Kane County		X
Kankakee County		X
Kendall County		X
Lake County		X
McHenry County		X
Will County		X
AQCR 68:		
Jo Daviess County		X
AQCR 69:		
Carroll County		X
Henry County		X
Mercer County		X
Rock Island County		X
Whiteside County		X
AQCR 70:		
Bond County		X
Clinton County		X
Madison County		X
Monroe County		X
Randolph County		X
St. Clair County		X
Washington County		X
AQCR 71:		
Bureau County		X
La Salle County		X
Lee County		X
Marshall County		X
Putnam County		X
Stark County		X
AQCR 72:		
Alexander County		X
Johnson County		X
Massac County		X
Pope County		X
Pulaski County		X
Union County		X
AQCR 73:		
Boone County		X

Illinois—NO_2 (1971 Annual Standard)

Designated area	Does not meet primary standards	Cannot be classified or better than national standards
De Kalb County		X
Ogle County		X
Stephenson County		X
Winnebago County		X
AQCR 74:		
Clay County		X
Crawford County		X
Edwards County		X
Effingham County		X
Fayette County		X
Franklin County		X
Gallatin County		X
Hamilton County		X
Hardin County		X
Jackson County		X
Jasper County		X
Jefferson County		X
Lawrence County		X
Marion County		X
Perry County		X
Richland County		X
Saline County		X
Wabash County		X
Wayne County		X
White County		X
Williamson County		X
AQCR 75:		
Adams County		X
Brown County		X
Calhoun County		X
Cass County		X
Christian County		X
Greene County		X
Jersey County		X
Logan County		X
Macon County		X
Macoupin County		X
Menard County		X
Montgomery County		X
Morgan County		X
Pike County		X
Sangamon County		X
Schuyler County		X
Scott County		X

Illinois—NO_2 (2010 1-Hour Standard)

Designated area	Designation [a]	
	Date [1]	Type
Adams County		Unclassifiable/Attainment.
Alexander County		Unclassifiable/Attainment.
Bond County		Unclassifiable/Attainment.
Boone County		Unclassifiable/Attainment.
Brown County		Unclassifiable/Attainment.
Bureau County		Unclassifiable/Attainment.
Calhoun County		Unclassifiable/Attainment.
Carroll County		Unclassifiable/Attainment.
Cass County		Unclassifiable/Attainment.
Champaign County		Unclassifiable/Attainment.
Christian County		Unclassifiable/Attainment.
Clark County		Unclassifiable/Attainment.
Clay County		Unclassifiable/Attainment.
Clinton County		Unclassifiable/Attainment.
Coles County		Unclassifiable/Attainment.
Cook County		Unclassifiable/Attainment.
Crawford County		Unclassifiable/Attainment.
Cumberland County		Unclassifiable/Attainment.
DeKalb County		Unclassifiable/Attainment.

Illinois—NO_2 (2010 1-Hour Standard)

Designated area	Designation [a]	
	Date [1]	Type
De Witt County		Unclassifiable/Attainment.
Douglas County		Unclassifiable/Attainment.
DuPage County		Unclassifiable/Attainment.
Edgar County		Unclassifiable/Attainment.
Edwards County		Unclassifiable/Attainment.
Effingham County		Unclassifiable/Attainment.
Fayette County		Unclassifiable/Attainment.
Ford County		Unclassifiable/Attainment.
Franklin County		Unclassifiable/Attainment.
Fulton County		Unclassifiable/Attainment.
Gallatin County		Unclassifiable/Attainment.
Greene County		Unclassifiable/Attainment.
Grundy County		Unclassifiable/Attainment.
Hamilton County		Unclassifiable/Attainment.
Hancock County		Unclassifiable/Attainment.
Hardin County		Unclassifiable/Attainment.
Henderson County		Unclassifiable/Attainment.
Henry County		Unclassifiable/Attainment.
Iroquois County		Unclassifiable/Attainment.
Jackson County		Unclassifiable/Attainment.
Jasper County		Unclassifiable/Attainment.
Jefferson County		Unclassifiable/Attainment.
Jersey County		Unclassifiable/Attainment.
Jo Daviess County		Unclassifiable/Attainment.
Johnson County		Unclassifiable/Attainment.
Kane County		Unclassifiable/Attainment.
Kankakee County		Unclassifiable/Attainment.
Kendall County		Unclassifiable/Attainment.
Knox County		Unclassifiable/Attainment.
La Salle County		Unclassifiable/Attainment.
Lake County		Unclassifiable/Attainment.
Lawrence County		Unclassifiable/Attainment.
Lee County		Unclassifiable/Attainment.
Livingston County		Unclassifiable/Attainment.
Logan County		Unclassifiable/Attainment.
Madison County		Unclassifiable/Attainment.
McDonough County		Unclassifiable/Attainment.
McLean County		Unclassifiable/Attainment.
Macon County		Unclassifiable/Attainment.
Macoupin County		Unclassifiable/Attainment.
Marion County		Unclassifiable/Attainment.
Marshall County		Unclassifiable/Attainment.
Mason County		Unclassifiable/Attainment.
Massac County		Unclassifiable/Attainment.
McHenry County		Unclassifiable/Attainment.
Menard County		Unclassifiable/Attainment.
Mercer County		Unclassifiable/Attainment.
Monroe County		Unclassifiable/Attainment.
Montgomery County		Unclassifiable/Attainment.
Morgan County		Unclassifiable/Attainment.
Moultrie County		Unclassifiable/Attainment.
Ogle County		Unclassifiable/Attainment.
Peoria County		Unclassifiable/Attainment.
Perry County		Unclassifiable/Attainment.
Piatt County		Unclassifiable/Attainment.
Pike County		Unclassifiable/Attainment.
Pope County		Unclassifiable/Attainment.
Pulaski County		Unclassifiable/Attainment.
Putnam County		Unclassifiable/Attainment.
Randolph County		Unclassifiable/Attainment.
Richland County		Unclassifiable/Attainment.
Rock Island County		Unclassifiable/Attainment.
St. Clair County		Unclassifiable/Attainment.
Saline County		Unclassifiable/Attainment.
Sangamon County		Unclassifiable/Attainment.
Schuyler County		Unclassifiable/Attainment.
Scott County		Unclassifiable/Attainment.
Shelby County		Unclassifiable/Attainment.
Stark County		Unclassifiable/Attainment.
Stephenson County		Unclassifiable/Attainment.
Tazewell County		Unclassifiable/Attainment.

Illinois—NO_2 (2010 1-Hour Standard)

Designated area	Designation [a]	
	Date [1]	Type
Union County		Unclassifiable/Attainment.
Vermilion County		Unclassifiable/Attainment.
Wabash County		Unclassifiable/Attainment.
Warren County		Unclassifiable/Attainment.
Washington County		Unclassifiable/Attainment.
Wayne County		Unclassifiable/Attainment.
White County		Unclassifiable/Attainment.
Whiteside County		Unclassifiable/Attainment.
Will County		Unclassifiable/Attainment.
Williamson County		Unclassifiable/Attainment.
Winnebago County		Unclassifiable/Attainment.
Woodford County		Unclassifiable/Attainment.

[a] Includes Indian Country located in each county or area, except as otherwise specified.
[1] This date is 90 days after October 31, 2011, unless otherwise noted.

Illinois—Ozone (8-Hour Standard)

Designated area	Designation [a]		Category/classification	
	Date [1]	Type	Date [1]	Type
Chicago-Gary-Lake County, IL-IN:				
Cook County		Nonattainment		Subpart 2/Moderate.
DuPage County		Nonattainment		Subpart 2/Moderate.
Grundy County (part)		Nonattainment		Subpart 2/Moderate.
Aux Sable Township Goose Lake Township				
Kane County		Nonattainment		Subpart 2/Moderate.
Kendall County (part)		Nonattainment		Subpart 2/Moderate.
Oswego Township				
Lake County		Nonattainment		Subpart 2/Moderate.
McHenry County		Nonattainment		Subpart 2/Moderate.
Will County		Nonattainment		Subpart 2/Moderate.
St. Louis, MO-IL:				
Jersey County	6/12/2012	Attainment		
Madison County	6/12/2012	Attainment		
Monroe County	6/12/2012	Attainment		
St. Clair County	6/12/2012	Attainment		
Rest of State				
Adams County		Unclassifiable/Attainment		
Alexander County		Unclassifiable/Attainment		
Bond County		Unclassifiable/Attainment		
Boone County		Unclassifiable/Attainment		
Brown County		Unclassifiable/Attainment		
Bureau County		Unclassifiable/Attainment		
Calhoun County		Unclassifiable/Attainment		
Carroll County		Unclassifiable/Attainment		
Cass County		Unclassifiable/Attainment		
Champaign County		Unclassifiable/Attainment		
Christian County		Unclassifiable/Attainment		
Clark County		Unclassifiable/Attainment		
Clay County		Unclassifiable/Attainment		
Clinton County		Unclassifiable/Attainment		
Coles County		Unclassifiable/Attainment		
Crawford County		Unclassifiable/Attainment		
Cumberland County		Unclassifiable/Attainment		
De Witt County		Unclassifiable/Attainment		
DeKalb County		Unclassifiable/Attainment		
Douglas County		Unclassifiable/Attainment		
Edgar County		Unclassifiable/Attainment		
Edwards County		Unclassifiable/Attainment		
Effingham County		Unclassifiable/Attainment		
Fayette County		Unclassifiable/Attainment		
Ford County		Unclassifiable/Attainment		
Franklin County		Unclassifiable/Attainment		
Fulton County		Unclassifiable/Attainment		
Gallatin County		Unclassifiable/Attainment		
Greene County		Unclassifiable/Attainment		
Grundy County (part)		Unclassifiable/Attainment		
All townships except Aux Sable and Goose Lake.				
Hamilton County		Unclassifiable/Attainment		

Illinois—Ozone (8-Hour Standard)

Designated area	Designation [a]		Category/classification	
	Date [1]	Type	Date [1]	Type
Hancock County		Unclassifiable/Attainment		
Hardin County		Unclassifiable/Attainment		
Henderson County		Unclassifiable/Attainment		
Henry County		Unclassifiable/Attainment		
Iroquois County		Unclassifiable/Attainment		
Jackson County		Unclassifiable/Attainment		
Jasper County		Unclassifiable/Attainment		
Jefferson County		Unclassifiable/Attainment		
Jo Daviess County		Unclassifiable/Attainment		
Johnson County		Unclassifiable/Attainment		
Kankakee County		Unclassifiable/Attainment		
Kendall County (part)		Unclassifiable/Attainment		
All townships except Oswego				
Knox County		Unclassifiable/Attainment		
La Salle County		Unclassifiable/Attainment		
Lawrence County		Unclassifiable/Attainment		
Lee County		Unclassifiable/Attainment		
Livingston County		Unclassifiable/Attainment		
Logan County		Unclassifiable/Attainment		
Macon County		Unclassifiable/Attainment		
Macoupin County		Unclassifiable/Attainment		
Marion County		Unclassifiable/Attainment		
Marshall County		Unclassifiable/Attainment		
Mason County		Unclassifiable/Attainment		
Massac County		Unclassifiable/Attainment		
McDonough County		Unclassifiable/Attainment		
McLean County		Unclassifiable/Attainment		
Menard County		Unclassifiable/Attainment		
Mercer County		Unclassifiable/Attainment		
Montgomery County		Unclassifiable/Attainment		
Morgan County		Unclassifiable/Attainment		
Moultrie County		Unclassifiable/Attainment		
Ogle County		Unclassifiable/Attainment		
Peoria County		Unclassifiable/Attainment		
Perry County		Unclassifiable/Attainment		
Piatt County		Unclassifiable/Attainment		
Pike County		Unclassifiable/Attainment		
Pope County		Unclassifiable/Attainment		
Pulaski County		Unclassifiable/Attainment		
Putnam County		Unclassifiable/Attainment		
Randolph County		Unclassifiable/Attainment		
Richland County		Unclassifiable/Attainment		
Rock Island County		Unclassifiable/Attainment		
Saline County		Unclassifiable/Attainment		
Sangamon County		Unclassifiable/Attainment		
Schuyler County		Unclassifiable/Attainment		
Scott County		Unclassifiable/Attainment		
Shelby County		Unclassifiable/Attainment		
Stark County		Unclassifiable/Attainment		
Stephenson County		Unclassifiable/Attainment		
Tazewell County		Unclassifiable/Attainment		
Union County		Unclassifiable/Attainment		
Vermilion County		Unclassifiable/Attainment		
Wabash County		Unclassifiable/Attainment		
Warren County		Unclassifiable/Attainment		
Washington County		Unclassifiable/Attainment		
Wayne County		Unclassifiable/Attainment		
White County		Unclassifiable/Attainment		
Whiteside County		Unclassifiable/Attainment		
Williamson County		Unclassifiable/Attainment		
Winnebago County		Unclassifiable/Attainment		
Woodford County		Unclassifiable/Attainment		

[a] Includes Indian Country located in each county or area, except as otherwise specified.
[1] This date is June 15, 2004, unless otherwise noted.

Illinois—$PM_{2.5}$ (Annual NAAQS)

Designated area	Designation [a]	
	Date [1]	Type
Chicago-Gary-Lake County, IL-IN:		
Cook County		Nonattainment.
DuPage County		Nonattainment.
Grundy County (part)		Nonattainment.
Goose Lake and Aux Sable Townships		
Kane County		Nonattainment.
Kendall County (part)		Nonattainment.
Oswego Township		
Lake County		Nonattainment.
McHenry County		Nonattainment.
Will County		Nonattainment.
St. Louis, MO-IL:		
Madison County		Nonattainment.
Monroe County		Nonattainment.
Randolph County (part).		
Baldwin Village		Nonattainment.
St. Clair County		Nonattainment.
Rest of State:		
Adams County		Unclassifiable/Attainment.
Alexander County		Unclassifiable/Attainment.
Bond County		Unclassifiable/Attainment.
Boone County		Unclassifiable/Attainment.
Brown County		Unclassifiable/Attainment.
Bureau County		Unclassifiable/Attainment.
Calhoun County		Unclassifiable/Attainment.
Carroll County		Unclassifiable/Attainment.
Cass County		Unclassifiable/Attainment.
Champaign County		Unclassifiable/Attainment.
Christian County		Unclassifiable/Attainment.
Clark County		Unclassifiable/Attainment.
Clay County		Unclassifiable/Attainment.
Clinton County		Unclassifiable/Attainment.
Coles County		Unclassifiable/Attainment.
Crawford County		Unclassifiable/Attainment.
Cumberland County		Unclassifiable/Attainment.
DeKalb County		Unclassifiable/Attainment.
De Witt County		Unclassifiable/Attainment.
Douglas County		Unclassifiable/Attainment.
Edgar County		Unclassifiable/Attainment.
Edwards County		Unclassifiable/Attainment.
Effingham County		Unclassifiable/Attainment.
Fayette County		Unclassifiable/Attainment.
Ford County		Unclassifiable/Attainment.
Franklin County		Unclassifiable/Attainment.
Fulton County		Unclassifiable/Attainment.
Gallatin County		Unclassifiable/Attainment.
Greene County		Unclassifiable/Attainment.
Grundy County (remainder)		Unclassifiable/Attainment.
Hamilton County		Unclassifiable/Attainment.
Hancock County		Unclassifiable/Attainment.
Hardin County		Unclassifiable/Attainment.
Henderson County		Unclassifiable/Attainment.
Henry County		Unclassifiable/Attainment.
Iroquois County		Unclassifiable/Attainment.
Jackson County		Unclassifiable/Attainment.
Jasper County		Unclassifiable/Attainment.
Jefferson County		Unclassifiable/Attainment.
Jersey County		Unclassifiable/Attainment.
Jo Daviess County		Unclassifiable/Attainment.
Johnson County		Unclassifiable/Attainment.
Kankakee County		Unclassifiable/Attainment.
Kendall County (remainder)		Unclassifiable/Attainment.
Knox County		Unclassifiable/Attainment.
La Salle County		Unclassifiable/Attainment.
Lawrence County		Unclassifiable/Attainment.
Lee County		Unclassifiable/Attainment.
Livingston County		Unclassifiable/Attainment.
Logan County		Unclassifiable/Attainment.
McDonough County		Unclassifiable/Attainment.
McLean County		Unclassifiable/Attainment.
Macon County		Unclassifiable/Attainment.

Illinois—$PM_{2.5}$ (Annual NAAQS)

Designated area	Designation [a]	
	Date [1]	Type
Macoupin County		Unclassifiable/Attainment.
Marion County		Unclassifiable/Attainment.
Marshall County		Unclassifiable/Attainment.
Mason County		Unclassifiable/Attainment.
Massac County		Unclassifiable/Attainment.
Menard County		Unclassifiable/Attainment.
Mercer County		Unclassifiable/Attainment.
Montgomery County		Unclassifiable/Attainment.
Morgan County		Unclassifiable/Attainment.
Moultrie County		Unclassifiable/Attainment.
Ogle County		Unclassifiable/Attainment.
Peoria County		Unclassifiable/Attainment.
Perry County		Unclassifiable/Attainment.
Piatt County		Unclassifiable/Attainment.
Pike County		Unclassifiable/Attainment.
Pope County		Unclassifiable/Attainment.
Pulaski County		Unclassifiable/Attainment.
Putnam County		Unclassifiable/Attainment.
Randolph County (remainder)		Unclassifiable/Attainment.
Richland County		Unclassifiable/Attainment.
Rock Island County		Unclassifiable/Attainment.
Saline County		Unclassifiable/Attainment.
Sangamon County		Unclassifiable/Attainment.
Schuyler County		Unclassifiable/Attainment.
Scott County		Unclassifiable/Attainment.
Shelby County		Unclassifiable/Attainment.
Stark County		Unclassifiable/Attainment.
Stephenson County		Unclassifiable/Attainment.
Tazewell County		Unclassifiable/Attainment.
Union County		Unclassifiable/Attainment.
Vermilion County		Unclassifiable/Attainment.
Wabash County		Unclassifiable/Attainment.
Warren County		Unclassifiable/Attainment.
Washington County		Unclassifiable/Attainment.
Wayne County		Unclassifiable/Attainment.
White County		Unclassifiable/Attainment.
Whiteside County		Unclassifiable/Attainment.
Williamson County		Unclassifiable/Attainment.
Winnebago County		Unclassifiable/Attainment.
Woodford County		Unclassifiable/Attainment.

[a] Includes Indian Country located in each county or area, except as otherwise specified.
[1] This date is 90 days after January 5, 2005, unless otherwise noted.

Illinois—$PM_{2.5}$ [24-hour NAAQS]

Designated area	Designation for the 1997 NAAQS [a]		Designation for the 2006 NAAQS [a]	
	Date [1]	Type	Date [2]	Type
Statewide:				
Adams County		Unclassifiable/Attainment.		Unclassifiable/Attainment.
Alexander County		Unclassifiable/Attainment.		Unclassifiable/Attainment.
Bond County		Unclassifiable/Attainment.		Unclassifiable/Attainment.
Boone County		Unclassifiable/Attainment.		Unclassifiable/Attainment.
Brown County		Unclassifiable/Attainment.		Unclassifiable/Attainment.
Bureau County		Unclassifiable/Attainment.		Unclassifiable/Attainment.
Calhoun County		Unclassifiable/Attainment.		Unclassifiable/Attainment.
Carroll County		Unclassifiable/Attainment.		Unclassifiable/Attainment.
Cass County		Unclassifiable/Attainment.		Unclassifiable/Attainment.
Champaign County		Unclassifiable/Attainment.		Unclassifiable/Attainment.
Christian County		Unclassifiable/Attainment.		Unclassifiable/Attainment.

Illinois—$PM_{2.5}$ [24-hour NAAQS]

Designated area	Designation for the 1997 NAAQS [a]		Designation for the 2006 NAAQS [a]	
	Date [1]	Type	Date [2]	Type
Clark County		Unclassifiable/Attainment.		Unclassifiable/Attainment.
Clay County		Unclassifiable/Attainment.		Unclassifiable/Attainment.
Clinton County		Unclassifiable/Attainment.		Unclassifiable/Attainment.
Coles County		Unclassifiable/Attainment.		Unclassifiable/Attainment.
Cook County		Unclassifiable/Attainment.		Unclassifiable/Attainment.
Crawford County		Unclassifiable/Attainment.		Unclassifiable/Attainment.
Cumberland County		Unclassifiable/Attainment.		Unclassifiable/Attainment.
DeKalb County		Unclassifiable/Attainment.		Unclassifiable/Attainment.
De Witt County		Unclassifiable/Attainment.		Unclassifiable/Attainment.
Douglas County		Unclassifiable/Attainment.		Unclassifiable/Attainment.
DuPage County		Unclassifiable/Attainment.		Unclassifiable/Attainment.
Edgar County		Unclassifiable/Attainment.		Unclassifiable/Attainment.
Edwards County		Unclassifiable/Attainment.		Unclassifiable/Attainment.
Effingham County		Unclassifiable/Attainment.		Unclassifiable/Attainment.
Fayette County		Unclassifiable/Attainment.		Unclassifiable/Attainment.
Ford County		Unclassifiable/Attainment.		Unclassifiable/Attainment.
Franklin County		Unclassifiable/Attainment.		Unclassifiable/Attainment.
Fulton County		Unclassifiable/Attainment.		Unclassifiable/Attainment.
Gallatin County		Unclassifiable/Attainment.		Unclassifiable/Attainment.
Greene County		Unclassifiable/Attainment.		Unclassifiable/Attainment.
Grundy County		Unclassifiable/Attainment.		Unclassifiable/Attainment.
Hamilton County		Unclassifiable/Attainment.		Unclassifiable/Attainment.
Hancock County		Unclassifiable/Attainment.		Unclassifiable/Attainment.
Hardin County		Unclassifiable/Attainment.		Unclassifiable/Attainment.
Henderson County		Unclassifiable/Attainment.		Unclassifiable/Attainment.
Henry County		Unclassifiable/Attainment.		Unclassifiable/Attainment.
Iroquois County		Unclassifiable/Attainment.		Unclassifiable/Attainment.
Jackson County		Unclassifiable/Attainment.		Unclassifiable/Attainment.
Jasper County		Unclassifiable/Attainment.		Unclassifiable/Attainment.
Jefferson County		Unclassifiable/Attainment.		Unclassifiable/Attainment.
Jersey County		Unclassifiable/Attainment.		Unclassifiable/Attainment.
Jo Daviess County		Unclassifiable/Attainment.		Unclassifiable/Attainment.
Johnson County		Unclassifiable/Attainment.		Unclassifiable/Attainment.
Kane County		Unclassifiable/Attainment.		Unclassifiable/Attainment.
Kankakee County		Unclassifiable/Attainment.		Unclassifiable/Attainment.

Illinois—$PM_{2.5}$ [24-hour NAAQS]

Designated area	Designation for the 1997 NAAQS [a]		Designation for the 2006 NAAQS [a]	
	Date [1]	Type	Date [2]	Type
Kendall County		Unclassifiable/Attainment.		Unclassifiable/Attainment.
Knox County		Unclassifiable/Attainment.		Unclassifiable/Attainment.
La Salle County		Unclassifiable/Attainment.		Unclassifiable/Attainment.
Lake County		Unclassifiable/Attainment.		Unclassifiable/Attainment.
Lawrence County		Unclassifiable/Attainment.		Unclassifiable/Attainment.
Lee County		Unclassifiable/Attainment.		Unclassifiable/Attainment.
Livingston County		Unclassifiable/Attainment.		Unclassifiable/Attainment.
Logan County		Unclassifiable/Attainment.		Unclassifiable/Attainment.
McDonough County		Unclassifiable/Attainment.		Unclassifiable/Attainment.
McHenry County		Unclassifiable/Attainment.		Unclassifiable/Attainment.
McLean County		Unclassifiable/Attainment.		Unclassifiable/Attainment.
Macon County		Unclassifiable/Attainment.		Unclassifiable/Attainment.
Macoupin County		Unclassifiable/Attainment.		Unclassifiable/Attainment.
Madison County		Unclassifiable/Attainment.		Unclassifiable/Attainment.
Marion County		Unclassifiable/Attainment.		Unclassifiable/Attainment.
Marshall County		Unclassifiable/Attainment.		Unclassifiable/Attainment.
Mason County		Unclassifiable/Attainment.		Unclassifiable/Attainment.
Massac County		Unclassifiable/Attainment.		Unclassifiable/Attainment.
Menard County		Unclassifiable/Attainment.		Unclassifiable/Attainment.
Mercer County		Unclassifiable/Attainment.		Unclassifiable/Attainment.
Monroe County		Unclassifiable/Attainment.		Unclassifiable/Attainment.
Montgomery County		Unclassifiable/Attainment.		Unclassifiable/Attainment.
Morgan County		Unclassifiable/Attainment.		Unclassifiable/Attainment.
Moultrie County		Unclassifiable/Attainment.		Unclassifiable/Attainment.
Ogle County		Unclassifiable/Attainment.		Unclassifiable/Attainment.
Peoria County		Unclassifiable/Attainment.		Unclassifiable/Attainment.
Perry County		Unclassifiable/Attainment.		Unclassifiable/Attainment.
Piatt County		Unclassifiable/Attainment.		Unclassifiable/Attainment.
Pike County		Unclassifiable/Attainment.		Unclassifiable/Attainment.
Pope County		Unclassifiable/Attainment.		Unclassifiable/Attainment.
Pulaski County		Unclassifiable/Attainment.		Unclassifiable/Attainment.
Putnam County		Unclassifiable/Attainment.		Unclassifiable/Attainment.
Randolph County		Unclassifiable/Attainment.		Unclassifiable/Attainment.
Richland County		Unclassifiable/Attainment.		Unclassifiable/Attainment.
Rock Island County		Unclassifiable/Attainment.		Unclassifiable/Attainment.

Illinois—$PM_{2.5}$ [24-hour NAAQS]

Designated area	Designation for the 1997 NAAQS [a]		Designation for the 2006 NAAQS [a]	
	Date [1]	Type	Date [2]	Type
St. Clair County		Unclassifiable/Attainment.		Unclassifiable/Attainment.
Saline County		Unclassifiable/Attainment.		Unclassifiable/Attainment.
Sangamon County		Unclassifiable/Attainment.		Unclassifiable/Attainment.
Schuyler County		Unclassifiable/Attainment.		Unclassifiable/Attainment.
Scott County		Unclassifiable/Attainment.		Unclassifiable/Attainment.
Shelby County		Unclassifiable/Attainment.		Unclassifiable/Attainment.
Stark County		Unclassifiable/Attainment.		Unclassifiable/Attainment.
Stephenson County		Unclassifiable/Attainment.		Unclassifiable/Attainment.
Tazewell County		Unclassifiable/Attainment.		Unclassifiable/Attainment.
Union County		Unclassifiable/Attainment.		Unclassifiable/Attainment.
Vermilion County		Unclassifiable/Attainment.		Unclassifiable/Attainment.
Wabash County		Unclassifiable/Attainment.		Unclassifiable/Attainment.
Warren County		Unclassifiable/Attainment.		Unclassifiable/Attainment.
Washington County		Unclassifiable/Attainment.		Unclassifiable/Attainment.
Wayne County		Unclassifiable/Attainment.		Unclassifiable/Attainment.
White County		Unclassifiable/Attainment.		Unclassifiable/Attainment.
Whiteside County		Unclassifiable/Attainment.		Unclassifiable/Attainment.
Will County		Unclassifiable/Attainment.		Unclassifiable/Attainment.
Williamson County		Unclassifiable/Attainment.		Unclassifiable/Attainment.
Winnebago County		Unclassifiable/Attainment.		Unclassifiable/Attainment.
Woodford County		Unclassifiable/Attainment.		Unclassifiable/Attainment.

[a] Includes Indian Country located in each county or area, except as otherwise specified.
[1] This date is 90 days after January 5, 2005, unless otherwise noted.
[2] This date is 30 days after November 13, 2009, unless otherwise noted.

Illinois—2008 Lead NAAQS

Designated area	Designation for the 2008 NAAQS [a]	
	Date [1]	Type
Chicago, IL:		
Cook County (part)		Nonattainment.
Area bounded by Damen Ave. on the west, Roosevelt Rd. on the north, the Dan Ryan Expressway on the east, and the Stevenson Expressway on the south.		
Granite City, IL:		
Madison County (part)	12/31/10	Nonattainment.
Area is bounded by Granite City Township and Venice Township.		
Rest of State		Unclassifiable/Attainment.

[a] Includes Indian Country located in each county or area, except as otherwise specified.
[1] December 31, 2011 unless otherwise noted.

[43 FR 8964, Mar. 3, 1978]

EDITORIAL NOTE: For FEDERAL REGISTER citations affecting § 81.314 see the List of CFR Sections Affected, which appears in the Finding Aids section of the printed volume and at *www.fdsys.gov*.

EFFECTIVE DATE NOTES: 1. At 77 FR 30116, May 21, 2012, §81.314 was amended by revising the table heading for ''Illinois—Ozone (8-Hour Standard)'' to read ''Illinois—1997 8-Hour Ozone NAAQS (Primary and Secondary)''; and by adding a new table entitled ''Illinois—2008 8-Hour Ozone NAAQS (Primary and Secondary)'' following the newly designated table ''Illinois—1997 8-Hour Ozone NAAQS (Primary and Secondary)'', effective July 20, 2012. For the convenience of the user, the added text is set forth as follows:

§81.314 Illinois.

* * * * *

Illinois—2008 8-Hour Ozone NAAQS (Primary and secondary)

Designated area	Designation		Classification	
	Date [1]	Type	Date [1]	Type
St. Louis-St. Charles-Farmington, MO-IL: [2]		Nonattainment		Marginal.
Madison County				
Monroe County				
St. Clair County				
Adams County [3]		Unclassifiable/Attainment		
Alexander County [3]		Unclassifiable/Attainment		
Bond County [3]		Unclassifiable/Attainment		
Boone County [3]		Unclassifiable/Attainment		
Brown County [3]		Unclassifiable/Attainment		
Bureau County [3]		Unclassifiable/Attainment		
Calhoun County [3]		Unclassifiable/Attainment		
Carroll County [3]		Unclassifiable/Attainment		
Cass County [3]		Unclassifiable/Attainment		
Champaign County [3]		Unclassifiable/Attainment		
Christian County [3]		Unclassifiable/Attainment		
Clark County [3]		Unclassifiable/Attainment		
Clay County [3]		Unclassifiable/Attainment		
Clinton County [3]		Unclassifiable/Attainment		
Coles County [3]		Unclassifiable/Attainment		
Crawford County [3]		Unclassifiable/Attainment		
Cumberland County [3]		Unclassifiable/Attainment		
DeKalb County [3]		Unclassifiable/Attainment		
De Witt County [3]		Unclassifiable/Attainment		
Douglas County [3]		Unclassifiable/Attainment		
Edgar County [3]		Unclassifiable/Attainment		
Edwards County [3]		Unclassifiable/Attainment		
Effingham County [3]		Unclassifiable/Attainment		
Fayette County [3]		Unclassifiable/Attainment		
Ford County [3]		Unclassifiable/Attainment		
Franklin County [3]		Unclassifiable/Attainment		
Fulton County [3]		Unclassifiable/Attainment		
Gallatin County [3]		Unclassifiable/Attainment		
Greene County [3]		Unclassifiable/Attainment		
Hamilton County [3]		Unclassifiable/Attainment		
Hancock County [3]		Unclassifiable/Attainment		
Hardin County [3]		Unclassifiable/Attainment		
Henderson County [3]		Unclassifiable/Attainment		
Henry County [3]		Unclassifiable/Attainment		
Iroquois County [3]		Unclassifiable/Attainment		
Jackson County [3]		Unclassifiable/Attainment		
Jasper County [3]		Unclassifiable/Attainment		
Jefferson County [3]		Unclassifiable/Attainment		
Jersey County [3]		Unclassifiable/Attainment		
Jo Daviess County [3]		Unclassifiable/Attainment		
Johnson County [3]		Unclassifiable/Attainment		
Kankakee County [3]		Unclassifiable/Attainment		
Knox County [3]		Unclassifiable/Attainment		
La Salle County [3]		Unclassifiable/Attainment		
Lawrence County [3]		Unclassifiable/Attainment		
Lee County [3]		Unclassifiable/Attainment		
Livingston County [3]		Unclassifiable/Attainment		
Logan County [3]		Unclassifiable/Attainment		
McDonough County [3]		Unclassifiable/Attainment		
McLean County [3]		Unclassifiable/Attainment		
Macon County [3]		Unclassifiable/Attainment		
Macoupin County [3]		Unclassifiable/Attainment		
Marion County [3]		Unclassifiable/Attainment		
Marshall County [3]		Unclassifiable/Attainment		
Mason County [3]		Unclassifiable/Attainment		

Illinois—2008 8-Hour Ozone NAAQS (Primary and secondary)

Designated area	Designation		Classification	
	Date [1]	Type	Date [1]	Type
Massac County [3]		Unclassifiable/Attainment		
Menard County [3]		Unclassifiable/Attainment		
Mercer County [3]		Unclassifiable/Attainment		
Montgomery County [3]		Unclassifiable/Attainment		
Morgan County [3]		Unclassifiable/Attainment		
Moultrie County [3]		Unclassifiable/Attainment		
Ogle County [3]		Unclassifiable/Attainment		
Peoria County [3]		Unclassifiable/Attainment		
Perry County [3]		Unclassifiable/Attainment		
Piatt County [3]		Unclassifiable/Attainment		
Pike County [3]		Unclassifiable/Attainment		
Pope County [3]		Unclassifiable/Attainment		
Pulaski County [3]		Unclassifiable/Attainment		
Putnam County [3]		Unclassifiable/Attainment		
Randolph County [3]		Unclassifiable/Attainment		
Richland County [3]		Unclassifiable/Attainment		
Rock Island County [3]		Unclassifiable/Attainment		
Saline County [3]		Unclassifiable/Attainment		
Sangamon County [3]		Unclassifiable/Attainment		
Schuyler County [3]		Unclassifiable/Attainment		
Scott County [3]		Unclassifiable/Attainment		
Shelby County [3]		Unclassifiable/Attainment		
Stark County [3]		Unclassifiable/Attainment		
Stephenson County [3]		Unclassifiable/Attainment		
Tazewell County [3]		Unclassifiable/Attainment		
Union County [3]		Unclassifiable/Attainment		
Vermilion County [3]		Unclassifiable/Attainment		
Wabash County [3]		Unclassifiable/Attainment		
Warren County [3]		Unclassifiable/Attainment		
Washington County [3]		Unclassifiable/Attainment		
Wayne County [3]		Unclassifiable/Attainment		
White County [3]		Unclassifiable/Attainment		
Whiteside County [3]		Unclassifiable/Attainment		
Williamson County [3]		Unclassifiable/Attainment		
Winnebago County [3]		Unclassifiable/Attainment		
Woodford County [3]		Unclassifiable/Attainment		

[1] This date is July 20, 2012, unless otherwise noted.
[2] Excludes Indian country located in each area, unless otherwise noted.
[3] Includes any Indian country in each county or area, unless otherwise specified.

* * * * *

2. At 77 FR 34227, June 11, 2012, § 81.314 was amended in the table entitled ''Illinois—2008 8-Hour Ozone NAAQS (Primary and Secondary)'' by adding a new entry for ''Chicago-Naperville, IL-IN-WI'' before the entry for ''St. Louis-St. Charles-Farmington, MO-IL''; by adding a new entry for ''Grundy County (remainder)'' before the entry for ''Hamilton County''; and by adding a new entry for ''Kendall County (remainder)'' before the entry for ''Knox County'', effective July 20, 2012. For the convenience of the user, the added text is set forth as follows:

§ 81.314 Illinois.

* * * * *

Illinois—2008 8-Hour Ozone NAAQS
[Primary and secondary]

Designated area	Designation		Classification	
	Date [1]	Type	Date [1]	Type
Chicago–Naperville, IL-N-WI: [2]		Nonattainment		Marginal.

Illinois—2008 8-Hour Ozone NAAQS
[Primary and secondary]

Designated area	Designation		Classification	
	Date [1]	Type	Date [1]	Type
Cook County				
DuPage County				
Grundy County (part)				
Aux Sable Township				
Goose Lake Township				
Kane County				
Kendall County (part)				
Oswego Township				
Lake County				
McHenry County				
Will County				
* * *	*	*	*	*
Grundy County (remainder) [3]		Unclassifiable/Attainment		
* * *	*	*	*	*
Kendall County (remainder)		Unclassifiable/Attainment		
* * *	*	*	*	*

[1] This date is July 20, 2012, unless otherwise noted.
[2] Excludes Indian country located in each area, unless otherwise noted.
[3] Includes any Indian country in each county or area, unless otherwise specified.

* * * * *

§ 81.315 Indiana.

Indiana—SO_2

Designated area	Does not meet primary standards	Does not meet secondary standards	Cannot be classified	Better than national standards
Dearborn County			X	
Gibson County			[1] X	
Jefferson County			[1] X	
Lake County				X
LaPorte County				X
Marion County				X
Porter County:				
An area bound on the north by Lake Michigan, on the west by the Lake-Porter County line, on the south by I–80 and 90 and on the east by the LaPorte-Porter County line			X	
The remainder of Porter County				X
Vigo County				X
Warrick County			[1] X	
Wayne County				X
All portions of all other Indiana Counties				X

[1] EPA designation replaces State designation.

Indiana—Carbon Monoxide

Designated Area	Designation		Classification	
	Date [1]	Type	Date [1]	Type
East Chicago Area:				
Lake County (part)	February 18, 2000	Attainment		
Part of City of East Chicago (area bounded by Columbus Drive on the north, the Indiana Harbor Canal on the west, 148th St. if extended, on the south, and Euclid Ave, on the east..				
Indianapolis Area:				
Marion County (part)	February 18, 2000	Attainment		

Indiana—Carbon Monoxide

Designated Area	Designation		Classification	
	Date [1]	Type	Date [1]	Type
Part of City of Indianapolis (area bounded by 11th St, on the north, Capital on the west, Georgia St. on the south, and Delaware on the east)..				
Lake County (part):				
The remainder of East Chicago and Lake County.	.....	Unclassifiable/Attainment		
Marion County (part)				
The remainder of Indianapolis and Marion County.	.....	Unclassifiable/Attainment		
Adams County	.....	Unclassifiable/Attainment		
Allen County	.....	Unclassifiable/Attainment		
Bartholomew County	.....	Unclassifiable/Attainment		
Benton County	.....	Unclassifiable/Attainment		
Blackford County	.....	Unclassifiable/Attainment		
Boone County	.....	Unclassifiable/Attainment		
Brown County	.....	Unclassifiable/Attainment		
Carroll County	.....	Unclassifiable/Attainment		
Cass County	.....	Unclassifiable/Attainment		
Clark County	.....	Unclassifiable/Attainment		
Clay County	.....	Unclassifiable/Attainment		
Clinton County	.....	Unclassifiable/Attainment		
Crawford County	.....	Unclassifiable/Attainment		
Daviess County	.....	Unclassifiable/Attainment		
De Kalb County	.....	Unclassifiable/Attainment		
Dearborn County	.....	Unclassifiable/Attainment		
Decatur County	.....	Unclassifiable/Attainment		
Delaware County	.....	Unclassifiable/Attainment		
Dubois County	.....	Unclassifiable/Attainment		
Elkhart County	.....	Unclassifiable/Attainment		
Fayette County	.....	Unclassifiable/Attainment		
Floyd County	.....	Unclassifiable/Attainment		
Fountain County	.....	Unclassifiable/Attainment		
Franklin County	.....	Unclassifiable/Attainment		
Fulton County	.....	Unclassifiable/Attainment		
Gibson County	.....	Unclassifiable/Attainment		
Grant County	.....	Unclassifiable/Attainment		
Greene County	.....	Unclassifiable/Attainment		
Hamilton County	.....	Unclassifiable/Attainment		
Hancock County	.....	Unclassifiable/Attainment		
Harrison County	.....	Unclassifiable/Attainment		
Hendricks County	.....	Unclassifiable/Attainment		
Henry County	.....	Unclassifiable/Attainment		
Howard County	.....	Unclassifiable/Attainment		
Huntington County	.....	Unclassifiable/Attainment		
Jackson County	.....	Unclassifiable/Attainment		
Jasper County	.....	Unclassifiable/Attainment		
Jay County	.....	Unclassifiable/Attainment		
Jefferson County	.....	Unclassifiable/Attainment		
Jennings County	.....	Unclassifiable/Attainment		
Johnson County	.....	Unclassifiable/Attainment		
Knox County	.....	Unclassifiable/Attainment		
Kosciusko County	.....	Unclassifiable/Attainment		
La Porte County	.....	Unclassifiable/Attainment		
Lagrange County	.....	Unclassifiable/Attainment		
Lawrence County	.....	Unclassifiable/Attainment		
Madison County	.....	Unclassifiable/Attainment		
Marshall County	.....	Unclassifiable/Attainment		
Martin County	.....	Unclassifiable/Attainment		
Miami County	.....	Unclassifiable/Attainment		
Monroe County	.....	Unclassifiable/Attainment		
Montgomery County	.....	Unclassifiable/Attainment		
Morgan County	.....	Unclassifiable/Attainment		
Newton County	.....	Unclassifiable/Attainment		
Noble County	.....	Unclassifiable/Attainment		
Ohio County	.....	Unclassifiable/Attainment		
Orange County	.....	Unclassifiable/Attainment		
Owen County	.....	Unclassifiable/Attainment		
Parke County	.....	Unclassifiable/Attainment		
Perry County	.....	Unclassifiable/Attainment		

Indiana—Carbon Monoxide

Designated Area	Designation		Classification	
	Date [1]	Type	Date [1]	Type
Pike County		Unclassifiable/Attainment		
Porter County		Unclassifiable/Attainment		
Posey County		Unclassifiable/Attainment		
Pulaski County		Unclassifiable/Attainment		
Putnam County		Unclassifiable/Attainment		
Randolph County		Unclassifiable/Attainment		
Ripley County		Unclassifiable/Attainment		
Rush County		Unclassifiable/Attainment		
Scott County		Unclassifiable/Attainment		
Shelby County		Unclassifiable/Attainment		
Spencer County		Unclassifiable/Attainment		
St. Joseph County		Unclassifiable/Attainment		
Starke County		Unclassifiable/Attainment		
Steuben County		Unclassifiable/Attainment		
Sullivan County		Unclassifiable/Attainment		
Switzerland County		Unclassifiable/Attainment		
Tippecanoe County		Unclassifiable/Attainment		
Tipton County		Unclassifiable/Attainment		
Union County		Unclassifiable/Attainment		
Vanderburgh County		Unclassifiable/Attainment		
Vermillion County		Unclassifiable/Attainment		
Vigo County		Unclassifiable/Attainment		
Wabash County		Unclassifiable/Attainment		
Warren County		Unclassifiable/Attainment		
Warrick County		Unclassifiable/Attainment		
Washington County		Unclassifiable/Attainment		
Wayne County		Unclassifiable/Attainment		
Wells County		Unclassifiable/Attainment		
White County		Unclassifiable/Attainment		
Whitley County		Unclassifiable/Attainment		

[1] This date is November 15, 1990, unless otherwise noted.

Indiana—Ozone (1-Hour Standard)[2]

Designated area	Designation		Classification	
	Date [1]	Type	Date [1]	Type
Chicago-Gary-Lake County Area:				
Lake County	11/15/90	Nonattainment	11/15/90	Severe-17
Porter County	11/15/90	Nonattainment	11/15/90	Severe-17
Evansville Area:				
Vanderburgh County		Attainment		
Indianapolis Area:				
Marion County		Attainment		
Louisville Area:				
Clark County	10/23/01	Attainment		
Floyd County	10/23/01	Attainment		
South Bend-Elkhart Area:				
Elkhart County		Attainment		
St Joseph County		Attainment		
Allen County		Unclassifiable/Attainment		
Adams County		Unclassifiable/Attainment		
Bartholomew County		Unclassifiable/Attainment		
Benton County		Unclassifiable/Attainment		
Blackford County		Unclassifiable/Attainment		
Boone County		Unclassifiable/Attainment		
Brown County		Unclassifiable/Attainment		
Carroll County		Unclassifiable/Attainment		
Cass County		Unclassifiable/Attainment		
Clay County		Unclassifiable/Attainment		
Clinton County		Unclassifiable/Attainment		
Crawford County		Unclassifiable/Attainment		
Daviess County		Unclassifiable/Attainment		
De Kalb County		Unclassifiable/Attainment		
Dearborn County		Unclassifiable/Attainment		
Decatur County		Unclassifiable/Attainment		
Delaware County		Unclassifiable/Attainment		
Dubois County		Unclassifiable/Attainment		
Fayette County		Unclassifiable/Attainment		
Fountain County		Unclassifiable/Attainment		

Indiana—Ozone (1-Hour Standard)[2]

Designated area	Designation		Classification	
	Date [1]	Type	Date [1]	Type
Franklin County		Unclassifiable/Attainment		
Fulton County		Unclassifiable/Attainment		
Gibson County		Unclassifiable/Attainment		
Grant County		Unclassifiable/Attainment		
Greene County		Unclassifiable/Attainment		
Hamilton County		Unclassifiable/Attainment		
Hancock County		Unclassifiable/Attainment		
Harrison County		Unclassifiable/Attainment		
Hendricks County		Unclassifiable/Attainment		
Henry County		Unclassifiable/Attainment		
Howard County		Unclassifiable/Attainment		
Huntington County		Unclassifiable/Attainment		
Jackson County		Unclassifiable/Attainment		
Jasper County		Unclassifiable/Attainment		
Jay County		Unclassifiable/Attainment		
Jefferson County		Unclassifiable/Attainment		
Jennings County		Unclassifiable/Attainment		
Johnson County		Unclassifiable/Attainment		
Knox County		Unclassifiable/Attainment		
Kosciusko County		Unclassifiable/Attainment		
La Porte County	11/15/90	Unclassifiable/Attainment	11/15/90	
Lagrange County		Unclassifiable/Attainment		
Lawrence County		Unclassifiable/Attainment		
Madison County		Unclassifiable/Attainment		
Marshall County		Unclassifiable/Attainment		
Martin County		Unclassifiable/Attainment		
Miami County		Unclassifiable/Attainment		
Monroe County		Unclassifiable/Attainment		
Montgomery County		Unclassifiable/Attainment		
Morgan County		Unclassifiable/Attainment		
Newton County		Unclassifiable/Attainment		
Noble County		Unclassifiable/Attainment		
Ohio County		Unclassifiable/Attainment		
Orange County		Unclassifiable/Attainment		
Owen County		Unclassifiable/Attainment		
Parke County		Unclassifiable/Attainment		
Perry County		Unclassifiable/Attainment		
Pike County		Unclassifiable/Attainment		
Posey County		Unclassifiable/Attainment		
Pulaski County		Unclassifiable/Attainment		
Putnam County		Unclassifiable/Attainment		
Randolph County		Unclassifiable/Attainment		
Ripley County		Unclassifiable/Attainment		
Rush County		Unclassifiable/Attainment		
Scott County		Unclassifiable/Attainment		
Shelby County		Unclassifiable/Attainment		
Spencer County		Unclassifiable/Attainment		
Starke County		Unclassifiable/Attainment		
Steuben County		Unclassifiable/Attainment		
Sullivan County		Unclassifiable/Attainment		
Switzerland County		Unclassifiable/Attainment		
Tippecanoe County		Unclassifiable/Attainment		
Tipton County		Unclassifiable/Attainment		
Union County		Unclassifiable/Attainment		
Vermillion County		Unclassifiable/Attainment		
Vigo County		Unclassifiable/Attainment		
Wabash County		Unclassifiable/Attainment		
Warren County		Unclassifiable/Attainment		
Warrick County		Unclassifiable/Attainment		
Washington County		Unclassifiable/Attainment		
Wayne County		Unclassifiable/Attainment		
Wells County		Unclassifiable/Attainment		
White County		Unclassifiable/Attainment		
Whitley County		Unclassifiable/Attainment		

[1] This date is October 18, 2000, unless otherwise noted.

[2] The 1-hour ozone standard is revoked effective June 15, 2005 for all areas in Indiana. The Evansville, Indianapolis, Louisville, and South Bend-Elkhart areas are maintenance areas for the 1-hour NAAQS for purposes of 40 CFR part 51 subpart X.

Indiana—PM–10

Designated Area	Designation		Classification	
	Date	Type	Date	Type
Lake County: Cities of East Chicago, Hammond, Whiting, and Gary	03/11/03	Attainment.		
Vermillion County: Part of Clinton Township, Unclassifiable including sections 15, 16, 21, 22, 27, 28, 33, and 34	10/27/97	Attainment.		
Rest of State	11/15/90	Unclassifiable.		

Indiana—NO_2 (1971 Annual Standard)

Designated area	Does not meet primary standards	Cannot be classified or better than national standards
All portions of all Indiana Counties		X

Indiana—NO_2 (2010 1-Hour Standard)

Designated area	Designation [a]	
	Date [1]	Type
Lake County		Unclassifiable/Attainment.
Marion County		Unclassifiable/Attainment.
St. Joseph County		Unclassifiable/Attainment.
Vanderburgh County		Unclassifiable/Attainment.
Rest of State		Unclassifiable/Attainment.

[a] Includes Indian Country located in each county or area, except as otherwise specified.
[1] This date is 90 days after October 31, 2011, unless otherwise noted.

Indiana—Ozone (8-Hour Standard)

Designated area	Designation [a]		Category/classification	
	Date [1]	Type	Date [1]	Type
Chicago–Gary–Lake County, IL–IN:				
Lake County	May 11, 2010	Attainment.		
Porter County.				
Cincinnati–Hamilton, OH–KY–IN:				
Dearborn County (part)	May 11, 2010	Attainment		
Evansville, IN:				
Vanderburgh County	1/30/06	Attainment		
Warrick County	1/30/06	Attainment		
Fort Wayne, IN:				
Allen County	2/12/07	Attainment		
Greene Co., IN:				
Greene County	12/29/05	Attainment		
Indianapolis, IN:	October 19, 2007			
Boone County		Attainment		
Hamilton County		Attainment		
Hancock County		Attainment		
Hendricks County		Attainment		
Johnson County		Attainment		
Madison County		Attainment		
Marion County		Attainment		
Morgan County		Attainment		
Shelby County		Attainment		
Jackson Co., IN:				
Jackson County	12/29/05	Attainment		
LaPorte CO., IN:				
LaPorte County	7/19/07	Attainment.		
Louisville, KY–IN:				
Clark County..				
Floyd County	July 19, 2007	Attainment.		
Muncie, IN:				
Delaware County	1/3/06	Attainment		
South Bend-Elkhart, IN:	7/19/07	Attainment		

Indiana—Ozone (8-Hour Standard)

Designated area	Designation [a]		Category/classification	
	Date [1]	Type	Date [1]	Type
Elkhart County..				
St. Joseph County..				
Terre Haute, IN:				
Vigo County	2/6/06	Attainment.		
Rest of State				
Adams County		Unclassifiable/Attainment		
Bartholomew County		Unclassifiable/Attainment		
Benton County		Unclassifiable/Attainment		
Blackford County		Unclassifiable/Attainment		
Brown County		Unclassifiable/Attainment		
Carroll County		Unclassifiable/Attainment		
Cass County		Unclassifiable/Attainment		
Clay County		Unclassifiable/Attainment		
Clinton County		Unclassifiable/Attainment		
Crawford County		Unclassifiable/Attainment		
Daviess County		Unclassifiable/Attainment		
De Kalb County		Unclassifiable/Attainment		
Dearborn County (part) remainder		Unclassifiable/Attainment		
Decatur County		Unclassifiable/Attainment		
Dubois County		Unclassifiable/Attainment		
Fayette County		Unclassifiable/Attainment		
Fountain County		Unclassifiable/Attainment		
Franklin County		Unclassifiable/Attainment		
Fulton County		Unclassifiable/Attainment		
Gibson County		Unclassifiable/Attainment		
Grant County		Unclassifiable/Attainment		
Harrison County		Unclassifiable/Attainment		
Henry County		Unclassifiable/Attainment		
Howard County		Unclassifiable/Attainment		
Huntington County		Unclassifiable/Attainment		
Jasper County		Unclassifiable/Attainment		
Jay County		Unclassifiable/Attainment		
Jefferson County		Unclassifiable/Attainment		
Jennings County		Unclassifiable/Attainment		
Knox County		Unclassifiable/Attainment		
Kosciusko County		Unclassifiable/Attainment		
LaGrange County		Unclassifiable/Attainment		
Lawrence County		Unclassifiable/Attainment		
Marshall County		Unclassifiable/Attainment		
Martin County		Unclassifiable/Attainment		
Miami County		Unclassifiable/Attainment		
Monroe County		Unclassifiable/Attainment		
Montgomery County		Unclassifiable/Attainment		
Newton County		Unclassifiable/Attainment		
Noble County		Unclassifiable/Attainment		
Ohio County		Unclassifiable/Attainment		
Orange County		Unclassifiable/Attainment		
Owen County		Unclassifiable/Attainment		
Parke County		Unclassifiable/Attainment		
Perry County		Unclassifiable/Attainment		
Pike County		Unclassifiable/Attainment		
Posey County		Unclassifiable/Attainment		
Pulaski County		Unclassifiable/Attainment		
Putnam County		Unclassifiable/Attainment		
Randolph County		Unclassifiable/Attainment		
Ripley County		Unclassifiable/Attainment		
Rush County		Unclassifiable/Attainment		
Scott County		Unclassifiable/Attainment		
Spencer County		Unclassifiable/Attainment		
Starke County		Unclassifiable/Attainment		
Steuben County		Unclassifiable/Attainment		
Sullivan County		Unclassifiable/Attainment		
Switzerland County		Unclassifiable/Attainment		
Tippecanoe County		Unclassifiable/Attainment		
Tipton County		Unclassifiable/Attainment		
Union County		Unclassifiable/Attainment		
Vermillion County		Unclassifiable/Attainment		
Wabash County		Unclassifiable/Attainment		
Warren County		Unclassifiable/Attainment		
Warrick County		Unclassifiable/Attainment		
Washington County		Unclassifiable/Attainment		

Indiana—Ozone (8-Hour Standard)

Designated area	Designation [a]		Category/classification	
	Date [1]	Type	Date [1]	Type
Wayne County	.....	Unclassifiable/Attainment		
Wells County	.....	Unclassifiable/Attainment		
White County	.....	Unclassifiable/Attainment		
Whitley County	.....	Unclassifiable/Attainment		

[a] Includes Indian Country located in each county or area, except as otherwise specified.
[1] This date is June 15, 2004, unless otherwise noted.
[2] November 22, 2004.

Indiana $PM_{2.5}$ (Annual NAAQS)

Designated area	Designation [a]	
	Date [1]	Type
Chicago-Gary-Lake County, IL-IN:	2/6/12	Attainment.
Lake County		
Porter County.		
Cincinnati-Hamilton, IN: Dearborn County (part) Lawrenceburg Township	12/23/11	Attainment.
Elkhart, IN:		
Elkhart County	.....	Unclassifiable/Attainment.
St. Joseph County	.....	Unclassifiable/Attainment.
Evansville, IN	10/27/11	Attainment.
Dubois County.		
Gibson County (part).		
Montgomery Township		
Pike County (part).		
Washington Township		
Spencer County (part).		
Ohio Township		
Vanderburgh County.		
Warrick County.		
Indianapolis, IN:	.....	Nonattainment.
Hamilton County	.....	Nonattainment.
Hendricks County	.....	Nonattainment.
Johnson County	.....	Nonattainment.
Marion County	.....	Nonattainment.
Morgan County	.....	Nonattainment.
Louisville, KY-IN:		
Clark County	.....	Nonattainment.
Floyd County	.....	Nonattainment.
Jefferson County (part)	.....	Nonattainment.
Madison Township		
Muncie, IN:		
Delaware County	.....	Unclassifiable/Attainment.
Rest of State:		
Adams County	.....	Unclassifiable/Attainment.
Allen County	.....	Unclassifiable/Attainment.
Bartholomew County	.....	Unclassifiable/Attainment.
Benton County	.....	Unclassifiable/Attainment.
Blackford County	.....	Unclassifiable/Attainment.
Boone County	.....	Unclassifiable/Attainment.
Brown County	.....	Unclassifiable/Attainment.
Carroll County	.....	Unclassifiable/Attainment.
Cass County	.....	Unclassifiable/Attainment.
Clay County	.....	Unclassifiable/Attainment.
Clinton County	.....	Unclassifiable/Attainment.
Crawford County	.....	Unclassifiable/Attainment.
Daviess County	.....	Unclassifiable/Attainment.
Dearborn County (remainder)	.....	Unclassifiable/Attainment.
Decatur County	.....	Unclassifiable/Attainment.
De Kalb County	.....	Unclassifiable/Attainment.
Fayette County	.....	Unclassifiable/Attainment.
Fountain County	.....	Unclassifiable/Attainment.
Franklin County	.....	Unclassifiable/Attainment.
Fulton County	.....	Unclassifiable/Attainment.
Gibson County (remainder)	.....	Unclassifiable/Attainment.
Grant County	.....	Unclassifiable/Attainment.
Greene County	.....	Unclassifiable/Attainment.
Hancock County	.....	Unclassifiable/Attainment.
Harrison County	.....	Unclassifiable/Attainment.
Henry County	.....	Unclassifiable/Attainment.

Indiana $PM_{2.5}$ (Annual NAAQS)

Designated area	Designation [a]	
	Date [1]	Type
Howard County		Unclassifiable/Attainment.
Huntington County		Unclassifiable/Attainment.
Jackson County		Unclassifiable/Attainment.
Jasper County		Unclassifiable/Attainment.
Jay County		Unclassifiable/Attainment.
Jefferson County (remainder)		Unclassifiable/Attainment.
Jennings County		Unclassifiable/Attainment.
Knox County		Unclassifiable/Attainment.
Kosciusko County		Unclassifiable/Attainment.
LaGrange County		Unclassifiable/Attainment.
La Porte County		Unclassifiable/Attainment.
Lawrence County		Unclassifiable/Attainment.
Madison County		Unclassifiable/Attainment.
Marshall County		Unclassifiable/Attainment.
Martin County		Unclassifiable/Attainment.
Miami County		Unclassifiable/Attainment.
Monroe County		Unclassifiable/Attainment.
Montgomery County		Unclassifiable/Attainment.
Newton County		Unclassifiable/Attainment.
Noble County		Unclassifiable/Attainment.
Ohio County		Unclassifiable/Attainment.
Orange County		Unclassifiable/Attainment.
Owen County		Unclassifiable/Attainment.
Parke County		Unclassifiable/Attainment.
Perry County		Unclassifiable/Attainment.
Pike County (remainder)		Unclassifiable/Attainment.
Posey County		Unclassifiable/Attainment.
Pulaski County		Unclassifiable/Attainment.
Putnam County		Unclassifiable/Attainment.
Randolph County		Unclassifiable/Attainment.
Ripley County		Unclassifiable/Attainment.
Rush County		Unclassifiable/Attainment.
Scott County		Unclassifiable/Attainment.
Shelby County		Unclassifiable/Attainment.
Spencer County (remainder)		Unclassifiable/Attainment.
Starke County		Unclassifiable/Attainment.
Steuben County		Unclassifiable/Attainment.
Sullivan County		Unclassifiable/Attainment.
Switzerland County		Unclassifiable/Attainment.
Tippecanoe County		Unclassifiable/Attainment.
Tipton County		Unclassifiable/Attainment.
Union County		Unclassifiable/Attainment.
Vermillion County		Unclassifiable/Attainment.
Vigo County		Unclassifiable/Attainment.
Wabash County		Unclassifiable/Attainment.
Warren County		Unclassifiable/Attainment.
Washington County		Unclassifiable/Attainment.
Wayne County		Unclassifiable/Attainment.
Wells County		Unclassifiable/Attainment.
White County		Unclassifiable/Attainment.
Whitley County		Unclassifiable/Attainment.

[1] Includes Indian Country located in each county or area, except as otherwise specified.
[a] This date is 90 days after January 5, 2005, unless otherwise noted.

Indiana—$PM_{2.5}$ [24-hour NAAQS]

Designated area	Designation for the 1997 NAAQS [a]		Designation for the 2006 NAAQS [a]	
	Date [1]	Type	Date [2]	Type
Statewide:				
Adams County		Unclassifiable/Attainment.		Unclassifiable/Attainment.
Allen County		Unclassifiable/Attainment.		Unclassifiable/Attainment.
Bartholomew County		Unclassifiable/Attainment.		Unclassifiable/Attainment.
Benton County		Unclassifiable/Attainment.		Unclassifiable/Attainment.
Blackford County		Unclassifiable/Attainment.		Unclassifiable/Attainment.

Indiana—$PM_{2.5}$ [24-hour NAAQS]

Designated area	Designation for the 1997 NAAQS [a]		Designation for the 2006 NAAQS [a]	
	Date [1]	Type	Date [2]	Type
Boone County		Unclassifiable/Attainment.		Unclassifiable/Attainment.
Brown County		Unclassifiable/Attainment.		Unclassifiable/Attainment.
Carroll County		Unclassifiable/Attainment.		Unclassifiable/Attainment.
Cass County		Unclassifiable/Attainment.		Unclassifiable/Attainment.
Clark County		Unclassifiable/Attainment.		Unclassifiable/Attainment.
Clay County		Unclassifiable/Attainment.		Unclassifiable/Attainment.
Clinton County		Unclassifiable/Attainment.		Unclassifiable/Attainment.
Crawford County		Unclassifiable/Attainment.		Unclassifiable/Attainment.
Daviess County		Unclassifiable/Attainment.		Unclassifiable/Attainment.
Dearborn County		Unclassifiable/Attainment.		Unclassifiable/Attainment.
Decatur County		Unclassifiable/Attainment.		Unclassifiable/Attainment.
De Kalb County		Unclassifiable/Attainment.		Unclassifiable/Attainment.
Elkhart County		Unclassifiable/Attainment.		Unclassifiable/Attainment.
Delaware County		Unclassifiable/Attainment.		Unclassifiable/Attainment.
Dubois County		Unclassifiable/Attainment.		Unclassifiable/Attainment.
Elkhart County		Unclassifiable/Attainment.		Unclassifiable/Attainment.
Fayette County		Unclassifiable/Attainment.		Unclassifiable/Attainment.
Floyd County		Unclassifiable/Attainment.		Unclassifiable/Attainment.
Fountain County		Unclassifiable/Attainment.		Unclassifiable/Attainment.
Franklin County		Unclassifiable/Attainment.		Unclassifiable/Attainment.
Fulton County		Unclassifiable/Attainment.		Unclassifiable/Attainment.
Gibson County		Unclassifiable/Attainment.		Unclassifiable/Attainment.
Grant County		Unclassifiable/Attainment.		Unclassifiable/Attainment.
Greene County		Unclassifiable/Attainment.		Unclassifiable/Attainment.
Hamilton County		Unclassifiable/Attainment.		Unclassifiable/Attainment.
Hancock County		Unclassifiable/Attainment.		Unclassifiable/Attainment.
Harrison County		Unclassifiable/Attainment.		Unclassifiable/Attainment.
Hendricks County		Unclassifiable/Attainment.		Unclassifiable/Attainment.
Henry County		Unclassifiable/Attainment.		Unclassifiable/Attainment.
Howard County		Unclassifiable/Attainment.		Unclassifiable/Attainment.
Huntington County		Unclassifiable/Attainment.		Unclassifiable/Attainment.
Jackson County		Unclassifiable/Attainment.		Unclassifiable/Attainment.
Jasper County		Unclassifiable/Attainment.		Unclassifiable/Attainment.
Jay County		Unclassifiable/Attainment.		Unclassifiable/Attainment.
Jefferson County		Unclassifiable/Attainment.		Unclassifiable/Attainment.

Indiana—$PM_{2.5}$ [24-hour NAAQS]

Designated area	Designation for the 1997 NAAQS [a]		Designation for the 2006 NAAQS [a]	
	Date [1]	Type	Date [2]	Type
Jennings County		Unclassifiable/Attainment.		Unclassifiable/Attainment.
Johnson County		Unclassifiable/Attainment.		Unclassifiable/Attainment.
Knox County		Unclassifiable/Attainment.		Unclassifiable/Attainment.
Kosciusko County		Unclassifiable/Attainment.		Unclassifiable/Attainment.
LaGrange County		Unclassifiable/Attainment.		Unclassifiable/Attainment.
La Porte County		Unclassifiable/Attainment.		Unclassifiable/Attainment.
Lake County		Unclassifiable/Attainment.		Unclassifiable/Attainment.
Lawrence County		Unclassifiable/Attainment.		Unclassifiable/Attainment.
Madison County		Unclassifiable/Attainment.		Unclassifiable/Attainment.
Marion County		Unclassifiable/Attainment.		Unclassifiable/Attainment.
Marshall County		Unclassifiable/Attainment.		Unclassifiable/Attainment.
Martin County		Unclassifiable/Attainment.		Unclassifiable/Attainment.
Miami County		Unclassifiable/Attainment.		Unclassifiable/Attainment.
Monroe County		Unclassifiable/Attainment.		Unclassifiable/Attainment.
Montgomery County		Unclassifiable/Attainment.		Unclassifiable/Attainment.
Morgan County		Unclassifiable/Attainment.		Unclassifiable/Attainment.
Newton County		Unclassifiable/Attainment.		Unclassifiable/Attainment.
Noble County		Unclassifiable/Attainment.		Unclassifiable/Attainment.
Ohio County		Unclassifiable/Attainment.		Unclassifiable/Attainment.
Orange County		Unclassifiable/Attainment.		Unclassifiable/Attainment.
Owen County		Unclassifiable/Attainment.		Unclassifiable/Attainment.
Parke County		Unclassifiable/Attainment.		Unclassifiable/Attainment.
Perry County		Unclassifiable/Attainment.		Unclassifiable/Attainment.
Pike County		Unclassifiable/Attainment.		Unclassifiable/Attainment.
Porter County		Unclassifiable/Attainment.		Unclassifiable/Attainment.
Posey County		Unclassifiable/Attainment.		Unclassifiable/Attainment.
Pulaski County		Unclassifiable/Attainment.		Unclassifiable/Attainment.
Putnam County		Unclassifiable/Attainment.		Unclassifiable/Attainment.
Randolph County		Unclassifiable/Attainment.		Unclassifiable/Attainment.
Ripley County		Unclassifiable/Attainment.		Unclassifiable/Attainment.
Rush County		Unclassifiable/Attainment.		Unclassifiable/Attainment.
St Joseph County		Unclassifiable/Attainment.		Unclassifiable/Attainment.
Scott County		Unclassifiable/Attainment.		Unclassifiable/Attainment.
Shelby County		Unclassifiable/Attainment.		Unclassifiable/Attainment.
Spencer County		Unclassifiable/Attainment.		Unclassifiable/Attainment.

Indiana—$PM_{2.5}$ [24-hour NAAQS]

Designated area	Designation for the 1997 NAAQS [a]		Designation for the 2006 NAAQS [a]	
	Date [1]	Type	Date [2]	Type
Starke County		Unclassifiable/Attainment.		Unclassifiable/Attainment.
Steuben County		Unclassifiable/Attainment.		Unclassifiable/Attainment.
Sullivan County		Unclassifiable/Attainment.		Unclassifiable/Attainment.
Switzerland County		Unclassifiable/Attainment.		Unclassifiable/Attainment.
Tippecanoe County		Unclassifiable/Attainment.		Unclassifiable/Attainment.
Tipton County		Unclassifiable/Attainment.		Unclassifiable/Attainment.
Union County		Unclassifiable/Attainment.		Unclassifiable/Attainment.
Vandenberg County		Unclassifiable/Attainment.		Unclassifiable/Attainment.
Vermillion County		Unclassifiable/Attainment.		Unclassifiable/Attainment.
Vigo County		Unclassifiable/Attainment.		Unclassifiable/Attainment.
Wabash County		Unclassifiable/Attainment.		Unclassifiable/Attainment.
Warren County		Unclassifiable/Attainment.		Unclassifiable/Attainment.
Warrick County		Unclassifiable/Attainment.		Unclassifiable/Attainment.
Washington County		Unclassifiable/Attainment.		Unclassifiable/Attainment.
Wayne County		Unclassifiable/Attainment.		Unclassifiable/Attainment.
Wells County		Unclassifiable/Attainment.		Unclassifiable/Attainment.
White County		Unclassifiable/Attainment.		Unclassifiable/Attainment.
Whitley County		Unclassifiable/Attainment.		Unclassifiable/Attainment.

[a] Includes Indian Country located in each county or area, except as otherwise specified.
[1] This date is 90 days after January 5, 2005, unless otherwise noted.
[2] This date is 30 days after November 13, 2009, unless otherwise noted.

Indiana—1978 Lead NAAQS

Designated area	Designation		Classification	
	Date	Type	Date	Type
Marion County (Part)— Part of Franklin Township: Thompson Road on the south; Emerson Avenue on the west; Five Points Road on the east; and Troy Avenue on the north.	7/10/00	Attainment		
Marion County (Part)— Part of Wayne Township: Rockville Road on the north; Girls School Road on the east; Washington Street on the south; and Bridgeport Road on the west.	7/10/00	Attainment		
Rest of State Not Designated.				

Indiana—2008 Lead NAAQS

Designated area	Designation for the 2008 NAAQS [a]	
	Date [1]	Type
Muncie, IN:		
Delaware County (part)	12/31/10	Nonattainment.

Indiana—2008 Lead NAAQS

Designated area	Designation for the 2008 NAAQS [a]	
	Date [1]	Type
A portion of the City of Muncie, Indiana bounded to the North by West 26th Street/Hines Road, to the east by Cowan Road, to the south by West Fuson Road, and to the west by a line running south from the eastern edge of Victory Temple's driveway to South Hoyt Avenue and then along South Hoyt Avenue.		
Rest of State	.....	Unclassifiable/Attainment.

[a] Includes Indian Country located in each county or area, except as otherwise specified.
[1] December 31, 2011 unless otherwise noted.

[43 FR 8964, Mar. 3, 1978]

EDITORIAL NOTE: For FEDERAL REGISTER citations affecting § 81.315, see the List of CFR Sections Affected, which appears in the Finding Aids section of the printed volume and at *www.fdsys.gov*.

EFFECTIVE DATE NOTES: 1. At 77 FR 30118, May 21, 2012, § 81.315 was amended by revising the table heading for ''Indiana—Ozone (8-Hour Standard)'' to read ''Indiana—1997 8-Hour Ozone NAAQS (Primary and Secondary)''; by adding a new table entitled ''Indiana—2008 8-Hour Ozone NAAQS (Primary and Secondary)'' following the newly designated table ''Indiana—1997 8-Hour Ozone NAAQS (Primary and Secondary)'', effective July 20, 2012. For the convenience of the user, the added text is set forth as follows:

§ 81.315 Indiana.

* * * * *

Indiana—2008 8-Hour Ozone NAAQS (Primary and secondary)

Designation area	Designation		Classification	
	Date [1]	Type	Date [1]	Type
Cincinnati, OH-KY-IN: [2]	.....	Nonattainment	.....	Marginal.
Dearborn County (part)				
Lawrenceburg Township				
Adams County [3]	.....	Unclassifiable/Attainment		
Allen County [3]	.....	Unclassifiable/Attainment		
Bartholomew County [3]	.....	Unclassifiable/Attainment		
Benton County [3]	.....	Unclassifiable/Attainment		
Blackford County [3]	.....	Unclassifiable/Attainment		
Boone County [3]	.....	Unclassifiable/Attainment		
Brown County [3]	.....	Unclassifiable/Attainment		
Carroll County [3]	.....	Unclassifiable/Attainment		
Cass County [3]	.....	Unclassifiable/Attainment		
Clark County [3]	.....	Unclassifiable/Attainment		
Clay County [3]	.....	Unclassifiable/Attainment		
Clinton County [3]	.....	Unclassifiable/Attainment		
Crawford County [3]	.....	Unclassifiable/Attainment		
Daviess County [3]	.....	Unclassifiable/Attainment		
Dearborn County (remainder) [3]	.....	Unclassifiable/Attainment		
Decatur County [3]	.....	Unclassifiable/Attainment		
De Kalb County [3]	.....	Unclassifiable/Attainment		
Delaware County [3]	.....	Unclassifiable/Attainment		
Dubois County [3]	.....	Unclassifiable/Attainment		
Elkhart County [3]	.....	Unclassifiable/Attainment		
Fayette County [3]	.....	Unclassifiable/Attainment		
Floyd County [3]	.....	Unclassifiable/Attainment		
Fountain County [3]	.....	Unclassifiable/Attainment		
Franklin County [3]	.....	Unclassifiable/Attainment		
Fulton County [3]	.....	Unclassifiable/Attainment		
Gibson County [3]	.....	Unclassifiable/Attainment		
Grant County [3]	.....	Unclassifiable/Attainment		
Greene County [3]	.....	Unclassifiable/Attainment		
Hamilton County [3]	.....	Unclassifiable/Attainment		
Hancock County [3]	.....	Unclassifiable/Attainment		
Harrison County [3]	.....	Unclassifiable/Attainment		
Hendricks County [3]	.....	Unclassifiable/Attainment		
Henry County [3]	.....	Unclassifiable/Attainment		

Indiana—2008 8-Hour Ozone NAAQS (Primary and secondary)

Designation area	Designation		Classification	
	Date [1]	Type	Date [1]	Type
Howard County [3]		Unclassifiable/Attainment		
Huntington County [3]		Unclassifiable/Attainment		
Jackson County [3]		Unclassifiable/Attainment		
Jay County [3]		Unclassifiable/Attainment		
Jefferson County [3]		Unclassifiable/Attainment		
Jennings County [3]		Unclassifiable/Attainment		
Johnson County [3]		Unclassifiable/Attainment		
Knox County [3]		Unclassifiable/Attainment		
Kosciusko County [3]		Unclassifiable/Attainment		
LaGrange County [3]		Unclassifiable/Attainment		
La Porte County [3]		Unclassifiable/Attainment		
Lawrence County [3]		Unclassifiable/Attainment		
Madison County [3]		Unclassifiable/Attainment		
Marion County [3]		Unclassifiable/Attainment		
Marshall County [3]		Unclassifiable/Attainment		
Martin County [3]		Unclassifiable/Attainment		
Miami County [3]		Unclassifiable/Attainment		
Monroe County [3]		Unclassifiable/Attainment		
Montgomery County [3]		Unclassifiable/Attainment		
Morgan County [3]		Unclassifiable/Attainment		
Newton County [3]		Unclassifiable/Attainment		
Noble County [3]		Unclassifiable/Attainment		
Ohio County [3]		Unclassifiable/Attainment		
Orange County [3]		Unclassifiable/Attainment		
Owen County [3]		Unclassifiable/Attainment		
Parke County [3]		Unclassifiable/Attainment		
Perry County [3]		Unclassifiable/Attainment		
Pike County [3]		Unclassifiable/Attainment		
Posey County [3]		Unclassifiable/Attainment		
Pulaski County [3]		Unclassifiable/Attainment		
Putnam County [3]		Unclassifiable/Attainment		
Randolph County [3]		Unclassifiable/Attainment		
Ripley County [3]		Unclassifiable/Attainment		
Rush County [3]		Unclassifiable/Attainment		
St Joseph County [3]		Unclassifiable/Attainment		
Scott County [3]		Unclassifiable/Attainment		
Shelby County [3]		Unclassifiable/Attainment		
Spencer County [3]		Unclassifiable/Attainment		
Starke County [3]		Unclassifiable/Attainment		
Steuben County [3]		Unclassifiable/Attainment		
Sullivan County [3]		Unclassifiable/Attainment		
Switzerland County [3]		Unclassifiable/Attainment		
Tippecanoe County [3]		Unclassifiable/Attainment		
Tipton County [3]		Unclassifiable/Attainment		
Union County [3]		Unclassifiable/Attainment		
Vanderburgh County [3]		Unclassifiable/Attainment		
Vermillion County [3]		Unclassifiable/Attainment		
Vigo County [3]		Unclassifiable/Attainment		
Wabash County [3]		Unclassifiable/Attainment		
Warren County [3]		Unclassifiable/Attainment		
Warrick County [3]		Unclassifiable/Attainment		
Washington County [3]		Unclassifiable/Attainment		
Wayne County [3]		Unclassifiable/Attainment		
Wells County [3]		Unclassifiable/Attainment		
White County [3]		Unclassifiable/Attainment		
Whitley County [3]		Unclassifiable/Attainment		

[1] This date is July 20, 2012, unless otherwise noted.
[2] Excludes Indian country located in each area, unless otherwise noted.
[3] Includes any Indian country in each county or area, unless otherwise specified.

* * * * *

2. At 77 FR 34228, June 11, 2012, §81.315, the table entitled ''Indiana—2008 8-Hour Ozone NAAQS (Primary and Secondary)'' is amended by adding a new entry for ''Chicago-Naperville, IL-IN-WI'' before the entry for ''Cincinnati, OH-K-IN''; and by adding a new entry for ''Jasper County'' before the entry for ''Jay County'', effective July 20, 2012. For the convenience of the user, the added text is set forth as follows:

§ 81.315 Indiana.

* * * * *

Indiana—2008 8-Hour Ozone NAAQS [Primary and secondary]

Designated area	Designation		Classification	
	Date [1]	Type	Date [1]	Type
Chicago–Naperville, IL-IN-WI: [2]		Nonattainment		Marginal.
Lake County				
Porter County				
* * *	*	*	*	*
Jasper County [3]		Unclassifiable/Attainment		
* * *	*	*	*	*

[1] This date is July 20, 2012, unless otherwise noted.
[2] Excludes Indian country located in each area, unless otherwise noted.
[3] Includes any Indian country in each county or area, unless otherwise specified.

* * * * *

§ 81.316 Iowa.

Iowa—TSP

Designated area	Does not meet primary standards	Does not meet secondary standards	Cannot be classified	Better than national standards
Central portion of Waterloo			X	
Cedar Falls Township			X	
East Waterloo Township			X	
Remainder of Black Hawk County				X
Mason City—A portion of Cerro Gordo County contained entirely within sections 27, 28, 29, 32, 33, 34 and 35 of T97N R20W and sections 2, 3, 4 and 5 of T96N R20W			X	
Mason City—two separate portions of Cerro Gordo County contained entirely within sections 13, 24 and 25 of T97N R21W; sections 18, 19, 20, 21, 30, 31 and 35 of T97N R20W; and sections 1, 2, 3, 4, 5, 8, 9, 10, 11, 12, 15, 16 and 17 of T96N R20W			X	
Falls Township			X	
Lake Township			X	
Lincoln Township			X	
Remainder of Cerro Gordo County				X
An area around downtown Clinton			X	
Comanche Township			X	
Remainder of Clinton County				X
Burlington Township			X	
Remainder of Des Moines County				X
Iowa City Township			X	
Remainder of Johnson County				X
An area in and near Keokuk			X	
Jackson Township			X	
Jefferson Township			X	
Madison Township			X	
Remainder of Lee County				X
Cedar Rapids—a portion of Linn County contained entirely within T 82 N., R 7 W.; and T 83 N., R 7 W			X	
Bertram Township			X	
Clinton Township			X	
College Township			X	
Fairfax Township			X	
Marion Township			X	
Monroe Township			X	
Putnam Township			X	
Remainder of Linn County				X
The central portion of Marshalltown			X	
Remainder of Marshall County				X
The central and southern portions of Muscatine			X	
Fruitland Township			X	
Sweetland Township			X	

Iowa—TSP

Designated area	Does not meet primary standards	Does not meet secondary standards	Cannot be classified	Better than national standards
Montpelier Township			X	
Remainder of Muscatine County				X
An area of central Des Moines east of U.S. Highway 65 & 69 (E. 14th Street)			X	
Portions of Polk County contained entirely within T 78 N. R 23 W.; T 78 N. R 24 W.; T 78 N. R 25 W.; T 80 R 24 W.; T 79 N. R 23 W.; T 79 N. R 24 W.; and T 79 R 25 W			X	
Clay Township			X	
Douglas Township			X	
Jefferson Township			X	
Remainder of Polk County				X
The western portion of Council Bluffs and Carter Lake			X	
Lake Township			X	
Lewis Township			X	
Remainder of Pottawatomie County				X
Portions of Buffalo, Davenport, Bettendorf and Riverdale			X	
Remainder of Scott County				X
Center Township			X	
Remainder of Wapello County				X
The central portion Ft. Dodge			X	
Otho Township			X	
Remainder of Webster County				X
The central and southern portions of Sioux City			X	
Liberty Township			X	
Woodbury Township			X	
Remainder of Woodbury County				X
Remainder of State				X

[1] EPA designation replaces State designation.

Iowa—SO_2

Designated area	Does not meet primary standards	Does not meet secondary standards	Cannot be classified	Better than national standards
Entire state				X

Iowa—Carbon Monoxide

Designated Area	Designation		Classification	
	Date [1]	Type	Date [1]	Type
Statewide		Unclassifiable/Attainment		
Adair County				
Adams County				
Allamakee County				
Appanoose County				
Audubon County				
Benton County				
Black Hawk County				
Boone County				
Bremer County				
Buchanan County				
Buena Vista County				
Butler County				
Calhoun County				
Carroll County				
Cass County				
Cedar County				
Cerro Gordo County				
Cherokee County				
Chickasaw County				
Clarke County				
Clay County				
Clayton County				
Clinton County				
Crawford County				
Dallas County				
Davis County				
Decatur County				

Iowa—Carbon Monoxide

Designated Area	Designation		Classification	
	Date [1]	Type	Date [1]	Type
Delaware County				
Des Moines County				
Dickinson County				
Dubuque County				
Emmet County				
Fayette County				
Floyd County				
Franklin County				
Fremont County				
Greene County				
Grundy County				
Guthrie County				
Hamilton County				
Hancock County				
Hardin County				
Harrison County				
Henry County				
Howard County				
Humboldt County				
Ida County				
Iowa County				
Jackson County				
Jasper County				
Jefferson County				
Johnson County				
Jones County				
Keokuk County				
Kossuth County				
Lee County				
Linn County				
Louisa County				
Lucas County				
Lyon County				
Madison County				
Mahaska County				
Marion County				
Marshall County				
Mills County				
Mitchell County				
Monona County				
Monroe County				
Montgomery County				
Muscatine County				
O'Brien County				
Osceola County				
Page County				
Palo Alto County				
Plymouth County				
Pocahontas County				
Polk County				
Pottawattamie County				
Poweshiek County				
Ringgold County				
Sac County				
Scott County				
Shelby County				
Sioux County				
Story County				
Tama County				
Taylor County				
Union County				
Van Buren County				
Wapello County				
Warren County				
Washington County				
Wayne County				
Webster County				
Winnebago County				
Winneshiek County				
Woodbury County				
Worth County				

Iowa—Carbon Monoxide

Designated Area	Designation		Classification	
	Date [1]	Type	Date [1]	Type
Wright County				

[1] This date is November 15, 1990, unless otherwise noted.

Iowa—Ozone (1-Hour Standard)[2]

Designated area	Designation		Classification	
	Date[1]	Type	Date[1]	Type
Statewide	.....	Unclassifiable/Attainment		
Adair County				
Adams County				
Allamakee County				
Appanoose County				
Audubon County				
Benton County				
Black Hawk County				
Boone County				
Bremer County				
Buchanan County				
Buena Vista County				
Butler County				
Calhoun County				
Carroll County				
Cass County				
Cedar County				
Cerro Gordo County				
Cherokee County				
Chickasaw County				
Clarke County				
Clay County				
Clayton County				
Clinton County				
Crawford County				
Dallas County				
Davis County				
Decatur County				
Delaware County				
Des Moines County				
Dickinson County				
Dubuque County				
Emmet County				
Fayette County				
Floyd County				
Franklin County				
Fremont County				
Greene County				
Grundy County				
Guthrie County				
Hamilton County				
Hancock County				
Hardin County				
Harrison County				
Henry County				
Howard County				
Humboldt County				
Ida County				
Iowa County				
Jackson County				
Jasper County				
Jefferson County				
Johnson County				
Jones County				
Keokuk County				
Kossuth County				
Lee County				
Linn County				
Louisa County				
Lucas County				
Lyon County				
Madison County				

Iowa—Ozone (1-Hour Standard)[2]

Designated area	Designation		Classification	
	Date[1]	Type	Date[1]	Type
Mahaska County				
Marion County				
Marshall County				
Mills County				
Mitchell County				
Monona County				
Monroe County				
Montgomery County				
Muscatine County				
O'Brien County				
Osceola County				
Page County				
Palo Alto County				
Plymouth County				
Pocahontas County				
Polk County				
Pottawattamie County				
Poweshiek County				
Ringgold County				
Sac County				
Scott County				
Shelby County				
Sioux County				
Story County				
Tama County				
Taylor County				
Union County				
Van Buren County				
Wapello County				
Warren County				
Washington County				
Wayne County				
Webster County				
Winnebago County				
Winneshiek County				
Woodbury County				
Worth County				
Wright County				

[1] This date is October 18, 2000, unless otherwise noted.
[2] The 1-hour ozone standard is revoked effective June 15, 2005 for all areas in Iowa.

Iowa—NO_2 (1971 Annual Standard)

Designated area	Does not meet primary standards	Cannot be classified or better than national standards
Entire State		X

Iowa—NO_2 (2010 1-Hour Standard)

Designated area	Designation[a]	
	Date[1]	Type
Adair County		Unclassifiable/Attainment.
Adams County		Unclassifiable/Attainment.
Allamakee County		Unclassifiable/Attainment.
Appanoose County		Unclassifiable/Attainment.
Audubon County		Unclassifiable/Attainment.
Benton County		Unclassifiable/Attainment.
Black Hawk County		Unclassifiable/Attainment.
Boone County		Unclassifiable/Attainment.
Bremer County		Unclassifiable/Attainment.
Buchanan County		Unclassifiable/Attainment.
Buena Vista County		Unclassifiable/Attainment.
Butler County		Unclassifiable/Attainment.
Calhoun County		Unclassifiable/Attainment.
Carroll County		Unclassifiable/Attainment.
Cass County		Unclassifiable/Attainment.

Iowa—NO_2 (2010 1-Hour Standard)

Designated area	Designation [a]	
	Date [1]	Type
Cedar County		Unclassifiable/Attainment.
Cerro Gordo County		Unclassifiable/Attainment.
Cherokee County		Unclassifiable/Attainment.
Chickasaw County		Unclassifiable/Attainment.
Clarke County		Unclassifiable/Attainment.
Clay County		Unclassifiable/Attainment.
Clayton County		Unclassifiable/Attainment.
Clinton County		Unclassifiable/Attainment.
Crawford County		Unclassifiable/Attainment.
Dallas County		Unclassifiable/Attainment.
Davis County		Unclassifiable/Attainment.
Decatur County		Unclassifiable/Attainment.
Delaware County		Unclassifiable/Attainment.
Des Moines County		Unclassifiable/Attainment.
Dickinson County		Unclassifiable/Attainment.
Dubuque County		Unclassifiable/Attainment.
Emmet County		Unclassifiable/Attainment.
Fayette County		Unclassifiable/Attainment.
Floyd County		Unclassifiable/Attainment.
Franklin County		Unclassifiable/Attainment.
Fremont County		Unclassifiable/Attainment.
Greene County		Unclassifiable/Attainment.
Grundy County		Unclassifiable/Attainment.
Guthrie County		Unclassifiable/Attainment.
Hamilton County		Unclassifiable/Attainment.
Hancock County		Unclassifiable/Attainment.
Hardin County		Unclassifiable/Attainment.
Harrison County		Unclassifiable/Attainment.
Henry County		Unclassifiable/Attainment.
Howard County		Unclassifiable/Attainment.
Humboldt County		Unclassifiable/Attainment.
Ida County		Unclassifiable/Attainment.
Iowa County		Unclassifiable/Attainment.
Jackson County		Unclassifiable/Attainment.
Jasper County		Unclassifiable/Attainment.
Jefferson County		Unclassifiable/Attainment.
Johnson County		Unclassifiable/Attainment.
Jones County		Unclassifiable/Attainment.
Keokuk County		Unclassifiable/Attainment.
Kossuth County		Unclassifiable/Attainment.
Lee County		Unclassifiable/Attainment.
Linn County		Unclassifiable/Attainment.
Louisa County		Unclassifiable/Attainment.
Lucas County		Unclassifiable/Attainment.
Lyon County		Unclassifiable/Attainment.
Madison County		Unclassifiable/Attainment.
Mahaska County		Unclassifiable/Attainment.
Marion County		Unclassifiable/Attainment.
Marshall County		Unclassifiable/Attainment.
Mills County		Unclassifiable/Attainment.
Mitchell County		Unclassifiable/Attainment.
Monona County		Unclassifiable/Attainment.
Monroe County		Unclassifiable/Attainment.
Montgomery County		Unclassifiable/Attainment.
Muscatine County		Unclassifiable/Attainment.
O'Brien County		Unclassifiable/Attainment.
Osceola County		Unclassifiable/Attainment.
Page County		Unclassifiable/Attainment.
Palo Alto County		Unclassifiable/Attainment.
Plymouth County		Unclassifiable/Attainment.
Pocahontas County		Unclassifiable/Attainment.
Polk County		Unclassifiable/Attainment.
Pottawattamie County		Unclassifiable/Attainment.
Poweshiek County		Unclassifiable/Attainment.
Ringgold County		Unclassifiable/Attainment.
Sac County		Unclassifiable/Attainment.
Scott County		Unclassifiable/Attainment.
Shelby County		Unclassifiable/Attainment.
Sioux County		Unclassifiable/Attainment.
Story County		Unclassifiable/Attainment.
Tama County		Unclassifiable/Attainment.

Iowa—NO_2 (2010 1-Hour Standard)

Designated area	Designation [a]	
	Date [1]	Type
Taylor County		Unclassifiable/Attainment.
Union County		Unclassifiable/Attainment.
Van Buren County		Unclassifiable/Attainment.
Wapello County		Unclassifiable/Attainment.
Warren County		Unclassifiable/Attainment.
Washington County		Unclassifiable/Attainment.
Wayne County		Unclassifiable/Attainment.
Webster County		Unclassifiable/Attainment.
Winnebago County		Unclassifiable/Attainment.
Winneshiek County		Unclassifiable/Attainment.
Woodbury County		Unclassifiable/Attainment.
Worth County		Unclassifiable/Attainment.
Wright County		Unclassifiable/Attainment.

[a] Includes Indian Country located in each county or area, except as otherwise specified.
[1] This date is 90 days after October 31, 2011, unless otherwise noted.

Iowa—Ozone (8-Hour Standard)

Designated area	Designation [a]		Category/classification	
	Date [1]	Type	Date [1]	Type
Statewide		Unclassifiable/Attainment		
Adair County				
Adams County				
Allamakee County				
Appanoose County				
Audubon County				
Benton County				
Black Hawk County				
Boone County				
Bremer County				
Buchanan County				
Buena Vista County				
Butler County				
Calhoun County				
Carroll County				
Cass County				
Cedar County				
Cerro Gordo County				
Cherokee County				
Chickasaw County				
Clarke County				
Clay County				
Clayton County				
Clinton County				
Crawford County				
Dallas County				
Davis County				
Decatur County				
Delaware County				
Des Moines County				
Dickinson County				
Dubuque County				
Emmet County				
Fayette County				
Floyd County				
Franklin County				
Fremont County				
Greene County				
Grundy County				
Guthrie County				
Hamilton County				
Hancock County				
Hardin County				
Harrison County				
Henry County				
Howard County				
Humboldt County				
Ida County				
Iowa County				

Iowa—Ozone (8-Hour Standard)

Designated area	Designation [a]		Category/classification	
	Date [1]	Type	Date [1]	Type
Jackson County				
Jasper County				
Jefferson County				
Johnson County				
Jones County				
Keokuk County				
Kossuth County				
Lee County				
Linn County				
Louisa County				
Lucas County				
Lyon County				
Madison County				
Mahaska County				
Marion County				
Marshall County				
Mills County				
Mitchell County				
Monona County				
Monroe County				
Montgomery County				
Muscatine County				
O'Brien County				
Osceola County				
Page County				
Palo Alto County				
Plymouth County				
Pocahontas County				
Polk County				
Pottawattamie County				
Poweshiek County				
Ringgold County				
Sac County				
Scott County				
Shelby County				
Sioux County				
Story County				
Tama County				
Taylor County				
Union County				
Van Buren County				
Wapello County				
Warren County				
Washington County				
Wayne County				
Webster County				
Winnebago County				
Winneshiek County				
Woodbury County				
Worth County				
Wright County				

[a] Includes Indian Country located in each county or area, except as otherwise specified.
[1] This date is June 15, 2004, unless otherwise noted.

Iowa—$PM_{2.5}$ (Annual NAAQS)

Designated area	Designation [a]	
	Date [1]	Type
Statewide:		
Adair County		Unclassifiable/Attainment.
Adams County		Unclassifiable/Attainment.
Allamakee County		Unclassifiable/Attainment.
Appanoose County		Unclassifiable/Attainment.
Audubon County		Unclassifiable/Attainment.
Benton County		Unclassifiable/Attainment.
Black Hawk County		Unclassifiable/Attainment.
Boone County		Unclassifiable/Attainment.
Bremer County		Unclassifiable/Attainment.
Buchanan County		Unclassifiable/Attainment.

Iowa—$PM_{2.5}$ (Annual NAAQS)

Designated area	Designation [a]	
	Date [1]	Type
Buena Vista County		Unclassifiable/Attainment.
Butler County		Unclassifiable/Attainment.
Calhoun County		Unclassifiable/Attainment.
Carroll County		Unclassifiable/Attainment.
Cass County		Unclassifiable/Attainment.
Cedar County		Unclassifiable/Attainment.
Cerro Gordo County		Unclassifiable/Attainment.
Cherokee County		Unclassifiable/Attainment.
Chickasaw County		Unclassifiable/Attainment.
Clarke County		Unclassifiable/Attainment.
Clay County		Unclassifiable/Attainment.
Clayton County		Unclassifiable/Attainment.
Clinton County		Unclassifiable/Attainment.
Crawford County		Unclassifiable/Attainment.
Dallas County		Unclassifiable/Attainment.
Davis County		Unclassifiable/Attainment.
Decatur County		Unclassifiable/Attainment.
Delaware County		Unclassifiable/Attainment.
Des Moines County		Unclassifiable/Attainment.
Dickinson County		Unclassifiable/Attainment.
Dubuque County		Unclassifiable/Attainment.
Emmet County		Unclassifiable/Attainment.
Fayette County		Unclassifiable/Attainment.
Floyd County		Unclassifiable/Attainment.
Franklin County		Unclassifiable/Attainment.
Fremont County		Unclassifiable/Attainment.
Greene County		Unclassifiable/Attainment.
Grundy County		Unclassifiable/Attainment.
Guthrie County		Unclassifiable/Attainment.
Hamilton County		Unclassifiable/Attainment.
Hancock County		Unclassifiable/Attainment.
Hardin County		Unclassifiable/Attainment.
Harrison County		Unclassifiable/Attainment.
Henry County		Unclassifiable/Attainment.
Howard County		Unclassifiable/Attainment.
Humboldt County		Unclassifiable/Attainment.
Ida County		Unclassifiable/Attainment.
Iowa County		Unclassifiable/Attainment.
Jackson County		Unclassifiable/Attainment.
Jasper County		Unclassifiable/Attainment.
Jefferson County		Unclassifiable/Attainment.
Johnson County		Unclassifiable/Attainment.
Jones County		Unclassifiable/Attainment.
Keokuk County		Unclassifiable/Attainment.
Kossuth County		Unclassifiable/Attainment.
Lee County		Unclassifiable/Attainment.
Linn County		Unclassifiable/Attainment.
Louisa County		Unclassifiable/Attainment.
Lucas County		Unclassifiable/Attainment.
Lyon County		Unclassifiable/Attainment.
Madison County		Unclassifiable/Attainment.
Mahaska County		Unclassifiable/Attainment.
Marion County		Unclassifiable/Attainment.
Marshall County		Unclassifiable/Attainment.
Mills County		Unclassifiable/Attainment.
Mitchell County		Unclassifiable/Attainment.
Monona County		Unclassifiable/Attainment.
Monroe County		Unclassifiable/Attainment.
Montgomery County		Unclassifiable/Attainment.
Muscatine County		Unclassifiable/Attainment.
O'Brien County		Unclassifiable/Attainment.
Osceola County		Unclassifiable/Attainment.
Page County		Unclassifiable/Attainment.
Palo Alto County		Unclassifiable/Attainment.
Plymouth County		Unclassifiable/Attainment.
Pocahontas County		Unclassifiable/Attainment.
Polk County		Unclassifiable/Attainment.
Pottawattamie County		Unclassifiable/Attainment.
Poweshiek County		Unclassifiable/Attainment.
Ringgold County		Unclassifiable/Attainment.
Sac County		Unclassifiable/Attainment.

Iowa—$PM_{2.5}$ (Annual NAAQS)

Designated area	Designation [a]	
	Date [1]	Type
Scott County		Unclassifiable/Attainment.
Shelby County		Unclassifiable/Attainment.
Sioux County		Unclassifiable/Attainment.
Story County		Unclassifiable/Attainment.
Tama County		Unclassifiable/Attainment.
Taylor County		Unclassifiable/Attainment.
Union County		Unclassifiable/Attainment.
Van Buren County		Unclassifiable/Attainment.
Wapello County		Unclassifiable/Attainment.
Warren County		Unclassifiable/Attainment.
Washington County		Unclassifiable/Attainment.
Wayne County		Unclassifiable/Attainment.
Webster County		Unclassifiable/Attainment.
Winnebago County		Unclassifiable/Attainment.
Winneshiek County		Unclassifiable/Attainment.
Woodbury County		Unclassifiable/Attainment.
Worth County		Unclassifiable/Attainment.
Wright County		Unclassifiable/Attainment.

[a] Includes Indian Country located in each county or area, except as otherwise specified.
[1] This date is 90 days after January 5, 2005, unless otherwise noted.

Iowa—$PM_{2.5}$ [24-hour NAAQS]

Designated area	Designation for the 1997 NAAQS [a]		Designation for the 2006 NAAQS [a]	
	Date [1]	Type	Date [2]	Type
Statewide:				
Adair County		Unclassifiable/Attainment.		Unclassifiable/Attainment.
Adams County		Unclassifiable/Attainment.		Unclassifiable/Attainment.
Allamakee County		Unclassifiable/Attainment.		Unclassifiable/Attainment.
Appanoose County		Unclassifiable/Attainment.		Unclassifiable/Attainment.
Audubon County		Unclassifiable/Attainment.		Unclassifiable/Attainment.
Benton County		Unclassifiable/Attainment.		Unclassifiable/Attainment.
Black Hawk County		Unclassifiable/Attainment.		Unclassifiable/Attainment.
Boone County		Unclassifiable/Attainment.		Unclassifiable/Attainment.
Bremer County		Unclassifiable/Attainment.		Unclassifiable/Attainment.
Buchanan County		Unclassifiable/Attainment.		Unclassifiable/Attainment.
Buena Vista County		Unclassifiable/Attainment.		Unclassifiable/Attainment.
Butler County		Unclassifiable/Attainment.		Unclassifiable/Attainment.
Calhoun County		Unclassifiable/Attainment.		Unclassifiable/Attainment.
Carroll County		Unclassifiable/Attainment.		Unclassifiable/Attainment.
Cass County		Unclassifiable/Attainment.		Unclassifiable/Attainment.
Cedar County		Unclassifiable/Attainment.		Unclassifiable/Attainment.
Cerro Gordo County		Unclassifiable/Attainment.		Unclassifiable/Attainment.
Cherokee County		Unclassifiable/Attainment.		Unclassifiable/Attainment.
Chickasaw County		Unclassifiable/Attainment.		Unclassifiable/Attainment.
Clarke County		Unclassifiable/Attainment.		Unclassifiable/Attainment.
Clay County		Unclassifiable/Attainment.		Unclassifiable/Attainment.
Clayton County		Unclassifiable/Attainment.		Unclassifiable/Attainment.

Iowa—$PM_{2.5}$ [24-hour NAAQS]

Designated area	Designation for the 1997 NAAQS [a]		Designation for the 2006 NAAQS [a]	
	Date [1]	Type	Date [2]	Type
Clinton County		Unclassifiable/Attainment.		Unclassifiable/Attainment.
Crawford County		Unclassifiable/Attainment.		Unclassifiable/Attainment.
Dallas County		Unclassifiable/Attainment.		Unclassifiable/Attainment.
Davis County		Unclassifiable/Attainment.		Unclassifiable/Attainment.
Decatur County		Unclassifiable/Attainment.		Unclassifiable/Attainment.
Delaware County		Unclassifiable/Attainment.		Unclassifiable/Attainment.
Des Moines County		Unclassifiable/Attainment.		Unclassifiable/Attainment.
Dickinson County		Unclassifiable/Attainment.		Unclassifiable/Attainment.
Dubuque County		Unclassifiable/Attainment.		Unclassifiable/Attainment.
Emmet County		Unclassifiable/Attainment.		Unclassifiable/Attainment.
Fayette County		Unclassifiable/Attainment.		Unclassifiable/Attainment.
Floyd County		Unclassifiable/Attainment.		Unclassifiable/Attainment.
Franklin County		Unclassifiable/Attainment.		Unclassifiable/Attainment.
Fremont County		Unclassifiable/Attainment.		Unclassifiable/Attainment.
Greene County		Unclassifiable/Attainment.		Unclassifiable/Attainment.
Grundy County		Unclassifiable/Attainment.		Unclassifiable/Attainment.
Guthrie County		Unclassifiable/Attainment.		Unclassifiable/Attainment.
Hamilton County		Unclassifiable/Attainment.		Unclassifiable/Attainment.
Hancock County		Unclassifiable/Attainment.		Unclassifiable/Attainment.
Hardin County		Unclassifiable/Attainment.		Unclassifiable/Attainment.
Harrison County		Unclassifiable/Attainment.		Unclassifiable/Attainment.
Henry County		Unclassifiable/Attainment.		Unclassifiable/Attainment.
Howard County		Unclassifiable/Attainment.		Unclassifiable/Attainment.
Humboldt County		Unclassifiable/Attainment.		Unclassifiable/Attainment.
Ida County		Unclassifiable/Attainment.		Unclassifiable/Attainment.
Iowa County		Unclassifiable/Attainment.		Unclassifiable/Attainment.
Jackson County		Unclassifiable/Attainment.		Unclassifiable/Attainment.
Jasper County		Unclassifiable/Attainment.		Unclassifiable/Attainment.
Jefferson County		Unclassifiable/Attainment.		Unclassifiable/Attainment.
Johnson County		Unclassifiable/Attainment.		Unclassifiable/Attainment.
Jones County		Unclassifiable/Attainment.		Unclassifiable/Attainment.
Keokuk County		Unclassifiable/Attainment.		Unclassifiable/Attainment.
Kossuth County		Unclassifiable/Attainment.		Unclassifiable/Attainment.
Lee County		Unclassifiable/Attainment.		Unclassifiable/Attainment.
Linn County		Unclassifiable/Attainment.		Unclassifiable/Attainment.

Iowa—$PM_{2.5}$ [24-hour NAAQS]

Designated area	Designation for the 1997 NAAQS [a]		Designation for the 2006 NAAQS [a]	
	Date [1]	Type	Date [2]	Type
Louisa County		Unclassifiable/Attainment.		Unclassifiable/Attainment.
Lucas County		Unclassifiable/Attainment.		Unclassifiable/Attainment.
Lyon County		Unclassifiable/Attainment.		Unclassifiable/Attainment.
Madison County		Unclassifiable/Attainment.		Unclassifiable/Attainment.
Mahaska County		Unclassifiable/Attainment.		Unclassifiable/Attainment.
Marion County		Unclassifiable/Attainment.		Unclassifiable/Attainment.
Marshall County		Unclassifiable/Attainment.		Unclassifiable/Attainment.
Mills County		Unclassifiable/Attainment.		Unclassifiable/Attainment.
Mitchell County		Unclassifiable/Attainment.		Unclassifiable/Attainment.
Monona County		Unclassifiable/Attainment.		Unclassifiable/Attainment.
Monroe County		Unclassifiable/Attainment.		Unclassifiable/Attainment.
Montgomery County		Unclassifiable/Attainment.		Unclassifiable/Attainment.
Muscatine County		Unclassifiable/Attainment.		Unclassifiable/Attainment.
O'Brien County		Unclassifiable/Attainment.		Unclassifiable/Attainment.
Osceola County		Unclassifiable/Attainment.		Unclassifiable/Attainment.
Page County		Unclassifiable/Attainment.		Unclassifiable/Attainment.
Palo Alto County		Unclassifiable/Attainment.		Unclassifiable/Attainment.
Plymouth County		Unclassifiable/Attainment.		Unclassifiable/Attainment.
Pocahontas County		Unclassifiable/Attainment.		Unclassifiable/Attainment.
Polk County		Unclassifiable/Attainment.		Unclassifiable/Attainment.
Pottawattamie County		Unclassifiable/Attainment.		Unclassifiable/Attainment.
Poweshiek County		Unclassifiable/Attainment.		Unclassifiable/Attainment.
Ringgold County		Unclassifiable/Attainment.		Unclassifiable/Attainment.
Sac County		Unclassifiable/Attainment.		Unclassifiable/Attainment.
Scott County		Unclassifiable/Attainment.		Unclassifiable/Attainment.
Shelby County		Unclassifiable/Attainment.		Unclassifiable/Attainment.
Sioux County		Unclassifiable/Attainment.		Unclassifiable/Attainment.
Story County		Unclassifiable/Attainment.		Unclassifiable/Attainment.
Tama County		Unclassifiable/Attainment.		Unclassifiable/Attainment.
Taylor County		Unclassifiable/Attainment.		Unclassifiable/Attainment.
Union County		Unclassifiable/Attainment.		Unclassifiable/Attainment.
Van Buren County		Unclassifiable/Attainment.		Unclassifiable/Attainment.
Wapello County		Unclassifiable/Attainment.		Unclassifiable/Attainment.
Warren County		Unclassifiable/Attainment.		Unclassifiable/Attainment.
Washington County		Unclassifiable/Attainment.		Unclassifiable/Attainment.

Iowa—$PM_{2.5}$ [24-hour NAAQS]

Designated area	Designation for the 1997 NAAQS [a]		Designation for the 2006 NAAQS [a]	
	Date [1]	Type	Date [2]	Type
Wayne County		Unclassifiable/Attainment.		Unclassifiable/Attainment.
Webster County		Unclassifiable/Attainment.		Unclassifiable/Attainment.
Winnebago County		Unclassifiable/Attainment.		Unclassifiable/Attainment.
Winneshiek County		Unclassifiable/Attainment.		Unclassifiable/Attainment.
Woodbury County		Unclassifiable/Attainment.		Unclassifiable/Attainment.
Worth County		Unclassifiable/Attainment.		Unclassifiable/Attainment.
Wright County		Unclassifiable/Attainment.		Unclassifiable/Attainment.

[a] Includes Indian Country located in each county or area, except as otherwise specified.
[1] This date is 90 days after January 5, 2005, unless otherwise noted.
[2] This date is 30 days after November 13, 2009, unless otherwise noted.

Iowa—2008 Lead NAAQS

Designated area	Designation for the 2008 NAAQS [a]	
	Date [1]	Type
Pottawattamie, IA:		
Pottawattamie County (part)		Nonattainment.
Area bounded by Avenue G on the north, N 16th/S 16th street on the east, 23rd Avenue on the south, and N 35th/S 35th street on the west.		
Rest of State		Unclassifiable/Attainment.

[a] Includes Indian Country located in each county or area, except as otherwise specified.
[1] December 31, 2011 unless otherwise noted.

[43 FR 8964, Mar. 3, 1978]

EDITORIAL NOTE: For FEDERAL REGISTER citations affecting § 81.316 see the List of CFR Sections Affected, which appears in the Finding Aids section of the printed volume and at *www.fdsys.gov*.

EFFECTIVE DATE NOTE: At 77 FR 30119, May 21, 2012, § 81.316 was amended by revising the table heading for ''Iowa—Ozone (8-Hour Standard)'' to read ''Iowa—1997 8-Hour Ozone NAAQS (Primary and Secondary)''; by adding a new table entitled ''Iowa—2008 8-Hour Ozone NAAQS (Primary and Secondary)'' following the newly designated table ''Iowa—1997 8-Hour Ozone NAAQS (Primary and Secondary)'', effective July 20, 2012. For the convenience of the user, the added text is set forth as follows:

§ 81.316 Iowa.

* * * * *

Iowa—2008 8-Hour Ozone NAAQS (Primary and secondary)

Designated area	Designation		Classification	
	Date [1]	Type	Date [1]	Type
Statewide and Any Areas of Indian Country:		Unclassifiable/Attainment		
Adair County				
Adams County				
Allamakee County				
Appanoose County				
Audubon County				
Benton County				
Black Hawk County				
Boone County				
Bremer County				
Buchanan County				
Buena Vista County				
Butler County				
Calhoun County				

Iowa—2008 8-Hour Ozone NAAQS (Primary and secondary)

Designated area	Designation		Classification	
	Date [1]	Type	Date [1]	Type
Carroll County				
Cass County				
Cedar County				
Cerro Gordo County				
Cherokee County				
Chickasaw County				
Clarke County				
Clay County				
Clayton County				
Clinton County				
Crawford County				
Dallas County				
Davis County				
Decatur County				
Delaware County				
Des Moines County				
Dickinson County				
Dubuque County				
Emmet County				
Fayette County				
Floyd County				
Franklin County				
Fremont County				
Greene County				
Grundy County				
Guthrie County				
Hamilton County				
Hancock County				
Hardin County				
Harrison County				
Henry County				
Howard County				
Humboldt County				
Ida County				
Iowa County				
Jackson County				
Jasper County				
Jefferson County				
Johnson County				
Jones County				
Keokuk County				
Kossuth County				
Lee County				
Linn County				
Louisa County				
Lucas County				
Lyon County				
Madison County				
Mahaska County				
Marion County				
Marshall County				
Mills County				
Mitchell County				
Monona County				
Monroe County				
Montgomery County				
Muscatine County				
O'Brien County				
Osceola County				
Page County				
Palo Alto County				
Plymouth County				
Pocahontas County				
Polk County				
Pottawattamie County				
Poweshiek County				
Ringgold County				
Sac County				
Scott County				
Shelby County				
Sioux County				

Iowa—2008 8-Hour Ozone NAAQS (Primary and secondary)

Designated area	Designation		Classification	
	Date [1]	Type	Date [1]	Type
Story County				
Tama County				
Taylor County				
Union County				
Van Buren County				
Wapello County				
Warren County				
Washington County				
Wayne County				
Webster County				
Winnebago County				
Winneshiek County				
Woodbury County				
Worth County				
Wright County				

[1] This date is July 20, 2012, unless otherwise noted.

* * * * *

§ 81.317 Kansas.

Kansas—TSP

Designated area (county)	Does not meet primary standards	Does not meet secondary standards	Cannot be classified	Better than national standards
Allen County				X
Anderson County				X
Atchinson County				X
Barker County				X
Barton County				X
Burton County				X
Brown County				X
Butler County				X
Chase County				X
Chautauqua County				X
Cherokee County				X
Cheyenne County				X
Clark County				X
Clay County				X
Cloud County				X
Coffey County				X
Comanche County				X
Cowley County				X
Crawford County				X
Dickinson County				X
Decatur County				X
Doniphan County				X
Douglas County				X
Edwards County				X
Elk County				X
Ellis County				X
Ellsworth County				X
Finney County				X
Ford County				X
Franklin County				X
Geary County				X
Gove County				X
Graham County				X
Grant County				X
Gray County				X
Greeley County				X
Greenwood County				X
Hamilton County				X
Harper County				X
Harvey County				X
Haskell County				X
Hodgeman County				X

Kansas—TSP

Designated area (county)	Does not meet primary standards	Does not meet secondary standards	Cannot be classified	Better than national standards
Jackson County				X
Jefferson County				X
Jewell County				X
Johnson County				X
Kearney County				X
Kingman County				X
Kiowa County				X
Labette County				X
Lane County				X
Leavenworth County				X
Lincoln County				X
Linn County				X
Logan County				X
Lyon County				X
McPherson County				X
Marion County				X
Marshall County				X
Meade County				X
Miami County				X
Mitchell County				X
Montgomery County				X
Morris County				X
Morton County				X
Nemaha County				X
Neosho County				X
Ness County				X
Norton County				X
Osage County				X
Osborne County				X
Ottawa County				X
Pawnee County				X
Phillips County				X
Pottawatomie County				X
Pratt County				X
Rawlins County				X
Reno County				X
Republic County				X
Rice County				X
Riley County				X
Rooks County				X
Rush County				X
Russell County				X
Saline County				X
Scott County				X
Sedgwick County				X
Seward County				X
Shawnee County				X
Sheridan County				X
Sherman County				X
Smith County				X
Stafford County				X
Stanton County				X
Stevens County				X
Sumner County				X
Thomas County				X
Trego County				X
Wallace County				X
Wabaunsee County				X
Washington County				X
Wichita County				X
Wilson County				X
Woodson County				X
Wyandotte County.				
A. Most of the area between I–635 and the Missouri state line			X	
B. Remainder of County				X

Kansas—SO_2

Designated area (county)	Does not meet primary standards	Does not meet secondary standards	Cannot be classified	Better than national standards
Allen County				X
Anderson County				X
Atchison County				X
Barber County				X
Barton County				X
Bourbon County				X
Brown County				X
Butler County				X
Chase County				X
Chautauqua County				X
Cherokee County				X
Cheyenne County				X
Clark County				X
Clay County				X
Cloud County				X
Coffey County				X
Comanche County				X
Cowley County				X
Crawford County				X
Decatur County				X
Dickinson County				X
Doniphan County				X
Douglas County				X
Edwards County				X
Elk County				X
Ellis County				X
Ellsworth County				X
Finney County				X
Ford County				X
Franklin County				X
Geary County				X
Gove County				X
Graham County				X
Grant County				X
Gray County				X
Greeley County				X
Greenwood County				X
Hamilton County				X
Harper County				X
Harvey County				X
Haskell County				X
Hodgeman County				X
Jackson County				X
Jefferson County				X
Jewell County				X
Johnson County				X
Kearney County				X
Kingman County				X
Kiowa County				X
Labette County				X
Lane County				X
Leavenworth County				X
Lincoln County				X
Linn County				X
Logan County				X
Lyon County				X
McPhearson County				X
Marion County				X
Marshall County				X
Meade County				X
Miami County				X
Mitchell County				X
Montgomery County				X
Morris County				X
Morton County				X
Pottawatomie and Nemaha Counties				X
Neosho County				X
Ness County				X
Norton County				X
Osage County				X

Kansas—SO_2

Designated area (county)	Does not meet primary standards	Does not meet secondary standards	Cannot be classified	Better than national standards
Osborne County				X
Ottawa County				X
Pawnee County				X
Phillips County				X
Pratt County				X
Rawlins County				X
Reno County				X
Republic County				X
Rice County				X
Riley County				X
Rooks County				X
Rush County				X
Russell County				X
Saline County				X
Scott County				X
Sedgwick County				X
Seward County				X
Shawnee County				X
Sheridan County				X
Sherman County				X
Smith County				X
Stafford County				X
Stanton County				X
Stevens County				X
Sumner County				X
Thomas County				X
Trego County				X
Wabaunsee County				X
Wallace County				X
Washington County				X
Wichita County				X
Wilson County				X
Woodson County				X
Wyandotte County				X

Kansas—Carbon Monoxide

Designated Area	Designation		Classification	
	Date[1]	Type	Date[1]	Type
Allen County		Unclassifiable/ Attainment		
Anderson County		Unclassifiable/ Attainment		
Atchison County		Unclassifiable/ Attainment		
Barber County		Unclassifiable/ Attainment		
Barton County		Unclassifiable/ Attainment		
Bourbon County		Unclassifiable/ Attainment		
Brown County		Unclassifiable/ Attainment		
Butler County		Unclassifiable/ Attainment		
Chase County		Unclassifiable/ Attainment		
Chautauqua County		Unclassifiable/ Attainment		
Cherokee County		Unclassifiable/Attainment		
Cheyenne County		Unclassifiable/Attainment		
Clark County		Unclassifiable/Attainment		
Clay County		Unclassifiable/Attainment		
Cloud County		Unclassifiable/Attainment		
Coffey County		Unclassifiable/Attainment		
Comanche County		Unclassifiable/Attainment		
Cowley County		Unclassifiable/Attainment		
Crawford County		Unclassifiable/Attainment		
Decatur County		Unclassifiable/Attainment		
Dickinson County		Unclassifiable/Attainment		
Doniphan County		Unclassifiable/Attainment		
Douglas County		Unclassifiable/Attainment		
Edwards County		Unclassifiable/Attainment		
Elk County		Unclassifiable/Attainment		
Ellis County		Unclassifiable/Attainment		
Ellsworth County		Unclassifiable/Attainment		
Finney County		Unclassifiable/Attainment		
Ford County		Unclassifiable/Attainment		

Kansas—Carbon Monoxide

Designated Area	Designation		Classification	
	Date[1]	Type	Date[1]	Type
Franklin County		Unclassifiable/Attainment		
Geary County		Unclassifiable/Attainment		
Gove County		Unclassifiable/Attainment		
Graham County		Unclassifiable/Attainment		
Grant County		Unclassifiable/Attainment		
Gray County		Unclassifiable/Attainment		
Greeley County		Unclassifiable/Attainment		
Greenwood County		Unclassifiable/Attainment		
Hamilton County		Unclassifiable/Attainment		
Harper County		Unclassifiable/Attainment		
Harvey County		Unclassifiable/Attainment		
Haskell County		Unclassifiable/Attainment		
Hodgeman County		Unclassifiable/Attainment		
Jackson County		Unclassifiable/Attainment		
Jefferson County		Unclassifiable/Attainment		
Jewell County		Unclassifiable/Attainment		
Johnson County		Unclassifiable/Attainment		
Kearny County		Unclassifiable/Attainment		
Kingman County		Unclassifiable/Attainment		
Kiowa County		Unclassifiable/Attainment		
Labette County		Unclassifiable/Attainment		
Lane County		Unclassifiable/Attainment		
Leavenworth County		Unclassifiable/Attainment		
Lincoln County		Unclassifiable/Attainment		
Linn County		Unclassifiable/Attainment		
Logan County		Unclassifiable/Attainment		
Lyon County		Unclassifiable/Attainment		
Marion County		Unclassifiable/Attainment		
Marshall County		Unclassifiable/Attainment		
McPherson County		Unclassifiable/Attainment		
Meade County		Unclassifiable/Attainment		
Miami County		Unclassifiable/Attainment		
Mitchell County		Unclassifiable/Attainment		
Montgomery County		Unclassifiable/Attainment		
Morris County		Unclassifiable/Attainment		
Morton County		Unclassifiable/Attainment		
Nemaha County		Unclassifiable/Attainment		
Neosho County		Unclassifiable/Attainment		
Ness County		Unclassifiable/Attainment		
Norton County		Unclassifiable/Attainment		
Osage County		Unclassifiable/Attainment		
Osborne County		Unclassifiable/Attainment		
Ottawa County		Unclassifiable/Attainment		
Pawnee County		Unclassifiable/Attainment		
Phillips County		Unclassifiable/Attainment		
Pottawatomie County		Unclassifiable/Attainment		
Pratt County		Unclassifiable/Attainment		
Rawlins County		Unclassifiable/Attainment		
Reno County		Unclassifiable/Attainment		
Republic County		Unclassifiable/Attainment		
Rice County		Unclassifiable/Attainment		
Riley County		Unclassifiable/Attainment		
Rooks County		Unclassifiable/Attainment		
Rush County		Unclassifiable/Attainment		
Russell County		Unclassifiable/Attainment		
Saline County		Unclassifiable/Attainment		
Scott County		Unclassifiable/Attainment		
Sedgwick County		Unclassifiable/Attainment		
Seward County		Unclassifiable/Attainment		
Shawnee County		Unclassifiable/Attainment		
Sheridan County		Unclassifiable/Attainment		
Sherman County		Unclassifiable/Attainment		
Smith County		Unclassifiable/Attainment		
Stafford County		Unclassifiable/Attainment		
Stanton County		Unclassifiable/Attainment		
Stevens County		Unclassifiable/Attainment		
Sumner County		Unclassifiable/Attainment		
Thomas County		Unclassifiable/Attainment		
Trego County		Unclassifiable/Attainment		
Wabaunsee County		Unclassifiable/Attainment		
Wallace County		Unclassifiable/Attainment		

Kansas—Carbon Monoxide

Designated Area	Designation		Classification	
	Date[1]	Type	Date[1]	Type
Washington County	.....	Unclassifiable/Attainment		
Wichita County	.....	Unclassifiable/Attainment		
Wilson County	.....	Unclassifiable/Attainment		
Woodson County	.....	Unclassifiable/Attainment		
Wyandotte County	.....	Unclassifiable/Attainment		

[1] This date is November 15, 1990, unless otherwise noted.

Kansas—Ozone (1-Hour Standard)[2]

Designated area	Designation		Classification	
	Date[1]	Type	Date[1]	Type
Allen County	.....	Unclassifiable/Attainment		
Anderson County	.....	Unclassifiable/Attainment		
Atchison County	.....	Unclassifiable/Attainment		
Barber County	.....	Unclassifiable/Attainment		
Barton County	.....	Unclassifiable/Attainment		
Bourbon County	.....	Unclassifiable/Attainment		
Brown County	.....	Unclassifiable/Attainment		
Butler County	.....	Unclassifiable/Attainment		
Chase County	.....	Unclassifiable/Attainment		
Chautauqua County	.....	Unclassifiable/Attainment		
Cherokee County	.....	Unclassifiable/Attainment		
Cheyenne County	.....	Unclassifiable/Attainment		
Clark County	.....	Unclassifiable/Attainment		
Clay County	.....	Unclassifiable/Attainment		
Cloud County	.....	Unclassifiable/Attainment		
Coffey County	.....	Unclassifiable/Attainment		
Comanche County	.....	Unclassifiable/Attainment		
Cowley County	.....	Unclassifiable/Attainment		
Crawford County	.....	Unclassifiable/Attainment		
Decatur County	.....	Unclassifiable/Attainment		
Dickinson County	.....	Unclassifiable/Attainment		
Doniphan County	.....	Unclassifiable/Attainment		
Douglas County	.....	Unclassifiable/Attainment		
Edwards County	.....	Unclassifiable/Attainment		
Elk County	.....	Unclassifiable/Attainment		
Ellis County	.....	Unclassifiable/Attainment		
Ellsworth County	.....	Unclassifiable/Attainment		
Finney County	.....	Unclassifiable/Attainment		
Ford County	.....	Unclassifiable/Attainment		
Franklin County	.....	Unclassifiable/Attainment		
Geary County	.....	Unclassifiable/Attainment		
Gove County	.....	Unclassifiable/Attainment		
Graham County	.....	Unclassifiable/Attainment		
Grant County	.....	Unclassifiable/Attainment		
Gray County	.....	Unclassifiable/Attainment		
Greeley County	.....	Unclassifiable/Attainment		
Greenwood County	.....	Unclassifiable/Attainment		
Hamilton County	.....	Unclassifiable/Attainment		
Harper County	.....	Unclassifiable/Attainment		
Harvey County	.....	Unclassifiable/Attainment		
Haskell County	.....	Unclassifiable/Attainment		
Hodgeman County	.....	Unclassifiable/Attainment		
Jackson County	.....	Unclassifiable/Attainment		
Jefferson County	.....	Unclassifiable/Attainment		
Jewell County	.....	Unclassifiable/Attainment		
Johnson County	7/23/92	Unclassifiable/Attainment		
Kearny County	.....	Unclassifiable/Attainment		
Kingman County	.....	Unclassifiable/Attainment		
Kiowa County	.....	Unclassifiable/Attainment		
Labette County	.....	Unclassifiable/Attainment		
Lane County	.....	Unclassifiable/Attainment		
Leavenworth County	.....	Unclassifiable/Attainment		
Lincoln County	.....	Unclassifiable/Attainment		
Linn County	.....	Unclassifiable/Attainment		
Logan County	.....	Unclassifiable/Attainment		
Lyon County	.....	Unclassifiable/Attainment		
Marion County	.....	Unclassifiable/Attainment		
Marshall County	.....	Unclassifiable/Attainment		

Kansas—Ozone (1-Hour Standard)[2]

Designated area	Designation		Classification	
	Date[1]	Type	Date[1]	Type
McPherson County		Unclassifiable/Attainment		
Meade County		Unclassifiable/Attainment		
Miami County		Unclassifiable/Attainment		
Mitchell County		Unclassifiable/Attainment		
Montgomery County		Unclassifiable/Attainment		
Morris County		Unclassifiable/Attainment		
Morton County		Unclassifiable/Attainment		
Nemaha County		Unclassifiable/Attainment		
Neosho County		Unclassifiable/Attainment		
Ness County		Unclassifiable/Attainment		
Norton County		Unclassifiable/Attainment		
Osage County		Unclassifiable/Attainment		
Osborne County		Unclassifiable/Attainment		
Ottawa County		Unclassifiable/Attainment		
Pawnee County		Unclassifiable/Attainment		
Phillips County		Unclassifiable/Attainment		
Pottawatomie County		Unclassifiable/Attainment		
Pratt County		Unclassifiable/Attainment		
Rawlins County		Unclassifiable/Attainment		
Reno County		Unclassifiable/Attainment		
Republic County		Unclassifiable/Attainment		
Rice County		Unclassifiable/Attainment		
Riley County		Unclassifiable/Attainment		
Rooks County		Unclassifiable/Attainment		
Rush County		Unclassifiable/Attainment		
Russell County		Unclassifiable/Attainment		
Saline County		Unclassifiable/Attainment		
Scott County		Unclassifiable/Attainment		
Sedgwick County		Unclassifiable/Attainment		
Seward County		Unclassifiable/Attainment		
Shawnee County		Unclassifiable/Attainment		
Sheridan County		Unclassifiable/Attainment		
Sherman County		Unclassifiable/Attainment		
Smith County		Unclassifiable/Attainment		
Stafford County		Unclassifiable/Attainment		
Stanton County		Unclassifiable/Attainment		
Stevens County		Unclassifiable/Attainment		
Sumner County		Unclassifiable/Attainment		
Thomas County		Unclassifiable/Attainment		
Trego County		Unclassifiable/Attainment		
Wabaunsee County		Unclassifiable/Attainment		
Wallace County		Unclassifiable/Attainment		
Washington County		Unclassifiable/Attainment		
Wichita County		Unclassifiable/Attainment		
Wilson County		Unclassifiable/Attainment		
Woodson County		Unclassifiable/Attainment		
Wyandotte County	7/23/92	Unclassifiable/Attainment		

[1] This date is October 18, 2000, unless otherwise noted.
[2] The 1-hour ozone standard is revoked effective June 15, 2005 for all areas in Kansas. The Kansas City area is a maintenance area for the 1-hour NAAQS for purposes of 40 CFR part 51 subpart X.

Kansas—NO_2 (1971 Annual Standard)

Designated area	Does not meet primary standards	Cannot be classified or better than national standards
Allen County		X
Anderson County		X
Atchison County		X
Barber County		X
Barton County		X
Bourbon County		X
Brown County		X
Butler County		X
Chase County		X
Chautauqua County		X
Cherokee County		X
Cheyenne County		X
Clark County		X
Clay County		X

Kansas—NO_2 (1971 Annual Standard)

Designated area	Does not meet primary standards	Cannot be classified or better than national standards
Cloud County		X
Coffey County		X
Comanche County		X
Cowley County		X
Crawford County		X
Decatur County		X
Dickerson County		X
Doniphan County		X
Douglas County		X
Edwards County		X
Elk County		X
Ellis County		X
Ellsworth County		X
Finney County		X
Ford County		X
Franklin County		X
Geary County		X
Gove County		X
Graham County		X
Grant County		X
Gray County		X
Greeley County		X
Greenwood County		X
Hamilton County		X
Harper County		X
Harvey County		X
Haskell County		X
Hodgeman County		X
Jackson County		X
Jefferson County		X
Jewell County		X
Johnson County		X
Kearney County		X
Kingman County		X
Kiowa County		X
Labette County		X
Lane County		X
Levenworth County		X
Lincoln County		X
Linn County		X
Logan County		X
Lyon County		X
McPhearon County		X
Marion County		X
Marshall County		X
Meade County		X
Miami County		X
Mitchell County		X
Montgomery County		X
Morris County		X
Morton County		X
Nemaha County		X
Neosho County		X
Ness County		X
Norton County		X
Osage County		X
Osborne County		X
Ottawa County		X
Pawnee County		X
Phillips County		X
Pottawatomie County		X
Pratt County		X
Rawlins County		X
Reno County		X
Republic County		X
Rice County		X
Riley County		X
Rooks County		X
Rush County		X
Russell County		X

Kansas—NO_2 (1971 Annual Standard)

Designated area	Does not meet primary standards	Cannot be classified or better than national standards
Saline County		X
Scott County		X
Sedgwick County		X
Seward County		X
Shawnee County		X
Sheridan County		X
Sherman County		X
Smith County		X
Stafford County		X
Stanton County		X
Stevens County		X
Sumner County		X
Thomas County		X
Trego County		X
Wabaunsee County		X
Wallace County		X
Washington County		X
Wichita County		X
Wilson County		X
Woodson County		X
Wyandotte County		X

Kansas—NO_2 (2010 1-Hour Standard)

Designated area	Designation [a]	
	Date [1]	Type
Allen County		Unclassifiable/Attainment.
Anderson County		Unclassifiable/Attainment.
Atchison County		Unclassifiable/Attainment.
Barber County		Unclassifiable/Attainment.
Barton County		Unclassifiable/Attainment.
Bourbon County		Unclassifiable/Attainment.
Brown County		Unclassifiable/Attainment.
Butler County		Unclassifiable/Attainment.
Chase County		Unclassifiable/Attainment.
Chautauqua County		Unclassifiable/Attainment.
Cherokee County		Unclassifiable/Attainment.
Cheyenne County		Unclassifiable/Attainment.
Clark County		Unclassifiable/Attainment.
Clay County		Unclassifiable/Attainment.
Cloud County		Unclassifiable/Attainment.
Coffey County		Unclassifiable/Attainment.
Comanche County		Unclassifiable/Attainment.
Cowley County		Unclassifiable/Attainment.
Crawford County		Unclassifiable/Attainment.
Decatur County		Unclassifiable/Attainment.
Dickinson County		Unclassifiable/Attainment.
Doniphan County		Unclassifiable/Attainment.
Douglas County		Unclassifiable/Attainment.
Edwards County		Unclassifiable/Attainment.
Elk County		Unclassifiable/Attainment.
Ellis County		Unclassifiable/Attainment.
Ellsworth County		Unclassifiable/Attainment.
Finney County		Unclassifiable/Attainment.
Ford County		Unclassifiable/Attainment.
Franklin County		Unclassifiable/Attainment.
Geary County		Unclassifiable/Attainment.
Gove County		Unclassifiable/Attainment.
Graham County		Unclassifiable/Attainment.
Grant County		Unclassifiable/Attainment.
Gray County		Unclassifiable/Attainment.
Greeley County		Unclassifiable/Attainment.
Greenwood County		Unclassifiable/Attainment.
Hamilton County		Unclassifiable/Attainment.
Harper County		Unclassifiable/Attainment.
Harvey County		Unclassifiable/Attainment.
Haskell County		Unclassifiable/Attainment.
Hodgeman County		Unclassifiable/Attainment.

Kansas—NO_2 (2010 1-Hour Standard)

Designated area	Designation [a]	
	Date [1]	Type
Jackson County		Unclassifiable/Attainment.
Jefferson County		Unclassifiable/Attainment.
Jewell County		Unclassifiable/Attainment.
Johnson County		Unclassifiable/Attainment.
Kearny County		Unclassifiable/Attainment.
Kingman County		Unclassifiable/Attainment.
Kiowa County		Unclassifiable/Attainment.
Labette County		Unclassifiable/Attainment.
Lane County		Unclassifiable/Attainment.
Leavenworth County		Unclassifiable/Attainment.
Lincoln County		Unclassifiable/Attainment.
Linn County		Unclassifiable/Attainment.
Logan County		Unclassifiable/Attainment.
Lyon County		Unclassifiable/Attainment.
McPherson County		Unclassifiable/Attainment.
Marion County		Unclassifiable/Attainment.
Marshall County		Unclassifiable/Attainment.
Meade County		Unclassifiable/Attainment.
Miami County		Unclassifiable/Attainment.
Mitchell County		Unclassifiable/Attainment.
Montgomery County		Unclassifiable/Attainment.
Morris County		Unclassifiable/Attainment.
Morton County		Unclassifiable/Attainment.
Nemaha County		Unclassifiable/Attainment.
Neosho County		Unclassifiable/Attainment.
Ness County		Unclassifiable/Attainment.
Norton County		Unclassifiable/Attainment.
Osage County		Unclassifiable/Attainment.
Osborne County		Unclassifiable/Attainment.
Ottawa County		Unclassifiable/Attainment.
Pawnee County		Unclassifiable/Attainment.
Phillips County		Unclassifiable/Attainment.
Pottawatomie County		Unclassifiable/Attainment.
Pratt County		Unclassifiable/Attainment.
Rawlins County		Unclassifiable/Attainment.
Reno County		Unclassifiable/Attainment.
Republic County		Unclassifiable/Attainment.
Rice County		Unclassifiable/Attainment.
Riley County		Unclassifiable/Attainment.
Rooks County		Unclassifiable/Attainment.
Rush County		Unclassifiable/Attainment.
Russell County		Unclassifiable/Attainment.
Saline County		Unclassifiable/Attainment.
Scott County		Unclassifiable/Attainment.
Sedgwick County		Unclassifiable/Attainment.
Seward County		Unclassifiable/Attainment.
Shawnee County		Unclassifiable/Attainment.
Sheridan County		Unclassifiable/Attainment.
Sherman County		Unclassifiable/Attainment.
Smith County		Unclassifiable/Attainment.
Stafford County		Unclassifiable/Attainment.
Stanton County		Unclassifiable/Attainment.
Stevens County		Unclassifiable/Attainment.
Sumner County		Unclassifiable/Attainment.
Thomas County		Unclassifiable/Attainment.
Trego County		Unclassifiable/Attainment.
Wabaunsee County		Unclassifiable/Attainment.
Wallace County		Unclassifiable/Attainment.
Washington County		Unclassifiable/Attainment.
Wichita County		Unclassifiable/Attainment.
Wilson County		Unclassifiable/Attainment.
Woodson County		Unclassifiable/Attainment.
Wyandotte County		Unclassifiable/Attainment.

[a] Includes Indian Country located in each county or area, except as otherwise specified.
[1] This date is 90 days after October 31, 2011, unless otherwise noted.

Kansas—Ozone (8-Hour Standard)

Designated area	Designation [a]		Category/classification	
	Date [1]	Type	Date [1]	Type
Kansas City, KS-MO:				
Johnson County	5/3/05	Attainment.		
Linn County	5/3/05	Attainment.		
Miami County	5/3/05	Attainment.		
Wyandotte County	5/3/05	Attainment.		
Rest of State:				
Allen County		Unclassifiable/Attainment.		
Anderson County		Unclassifiable/Attainment.		
Atchison County		Unclassifiable/Attainment.		
Barber County		Unclassifiable/Attainment.		
Barton County		Unclassifiable/Attainment.		
Bourbon County		Unclassifiable/Attainment.		
Brown County		Unclassifiable/Attainment.		
Butler County		Unclassifiable/Attainment.		
Chase County		Unclassifiable/Attainment.		
Chautauqua County		Unclassifiable/Attainment.		
Cherokee County		Unclassifiable/Attainment.		
Cheyenne County		Unclassifiable/Attainment.		
Clark County		Unclassifiable/Attainment.		
Clay County		Unclassifiable/Attainment.		
Cloud County		Unclassifiable/Attainment.		
Coffey County		Unclassifiable/Attainment.		
Comanche County		Unclassifiable/Attainment.		
Cowley County		Unclassifiable/Attainment.		
Crawford County		Unclassifiable/Attainment.		
Decatur County		Unclassifiable/Attainment.		
Dickinson County		Unclassifiable/Attainment.		
Doniphan County		Unclassifiable/Attainment.		
Douglas County		Unclassifiable/Attainment.		
Edwards County		Unclassifiable/Attainment.		
Elk County		Unclassifiable/Attainment.		
Ellis County		Unclassifiable/Attainment.		
Ellsworth County		Unclassifiable/Attainment.		
Finney County		Unclassifiable/Attainment.		
Ford County		Unclassifiable/Attainment.		
Franklin County		Unclassifiable/Attainment.		
Geary County		Unclassifiable/Attainment.		
Gove County		Unclassifiable/Attainment.		
Graham County		Unclassifiable/Attainment.		
Grant County		Unclassifiable/Attainment.		
Gray County		Unclassifiable/Attainment.		
Greeley County		Unclassifiable/Attainment.		
Greenwood County		Unclassifiable/Attainment.		
Hamilton County		Unclassifiable/Attainment.		
Harper County		Unclassifiable/Attainment.		
Harvey County		Unclassifiable/Attainment.		
Haskell County		Unclassifiable/Attainment.		
Hodgeman County		Unclassifiable/Attainment.		
Jackson County		Unclassifiable/Attainment.		
Jefferson County		Unclassifiable/Attainment.		
Jewell County		Unclassifiable/Attainment.		
Kearny County		Unclassifiable/Attainment.		
Kingman County		Unclassifiable/Attainment.		
Kiowa County		Unclassifiable/Attainment.		
Labette County		Unclassifiable/Attainment.		
Lane County		Unclassifiable/Attainment.		
Leavenworth County		Unclassifiable/Attainment.		
Lincoln County		Unclassifiable/Attainment.		
Logan County		Unclassifiable/Attainment.		
Lyon County		Unclassifiable/Attainment.		
Marion County		Unclassifiable/Attainment.		
Marshall County		Unclassifiable/Attainment.		
McPherson County		Unclassifiable/Attainment.		
Meade County		Unclassifiable/Attainment.		
Mitchell County		Unclassifiable/Attainment.		
Montgomery County		Unclassifiable/Attainment.		
Morris County		Unclassifiable/Attainment.		
Morton County		Unclassifiable/Attainment.		
Nemaha County		Unclassifiable/Attainment.		
Neosho County		Unclassifiable/Attainment.		
Ness County		Unclassifiable/Attainment.		

Kansas—Ozone (8-Hour Standard)

Designated area	Designation [a]		Category/classification	
	Date [1]	Type	Date [1]	Type
Norton County		Unclassifiable/Attainment.		
Osage County		Unclassifiable/Attainment.		
Osborne County		Unclassifiable/Attainment.		
Ottawa County		Unclassifiable/Attainment.		
Pawnee County		Unclassifiable/Attainment.		
Phillips County		Unclassifiable/Attainment.		
Pottawatomie County		Unclassifiable/Attainment.		
Pratt County		Unclassifiable/Attainment.		
Rawlins County		Unclassifiable/Attainment.		
Reno County		Unclassifiable/Attainment.		
Republic County		Unclassifiable/Attainment.		
Rice County		Unclassifiable/Attainment.		
Riley County		Unclassifiable/Attainment.		
Rooks County		Unclassifiable/Attainment.		
Rush County		Unclassifiable/Attainment.		
Russell County		Unclassifiable/Attainment.		
Saline County		Unclassifiable/Attainment.		
Scott County		Unclassifiable/Attainment.		
Sedgwick County		Unclassifiable/Attainment.		
Seward County		Unclassifiable/Attainment.		
Shawnee County		Unclassifiable/Attainment.		
Sheridan County		Unclassifiable/Attainment.		
Sherman County		Unclassifiable/Attainment.		
Smith County		Unclassifiable/Attainment.		
Stafford County		Unclassifiable/Attainment.		
Stanton County		Unclassifiable/Attainment.		
Stevens County		Unclassifiable/Attainment.		
Sumner County		Unclassifiable/Attainment.		
Thomas County		Unclassifiable/Attainment.		
Trego County		Unclassifiable/Attainment.		
Wabaunsee County		Unclassifiable/Attainment.		
Wallace County		Unclassifiable/Attainment.		
Washington County		Unclassifiable/Attainment.		
Wichita County		Unclassifiable/Attainment.		
Wilson County		Unclassifiable/Attainment.		
Woodson County		Unclassifiable/Attainment.		

[a] Includes Indian Country located in each county or area, except as otherwise specified.
[1] This date is June 15, 2004, unless otherwise noted.

Kansas—$PM_{2.5}$ (Annual NAAQS)

Designated area	Designation [a]	
	Date[1]	Type
Statewide:		
Allen County		Unclassifiable/Attainment.
Anderson County		Unclassifiable/Attainment.
Atchison County		Unclassifiable/Attainment.
Barber County		Unclassifiable/Attainment.
Barton County		Unclassifiable/Attainment.
Bourbon County		Unclassifiable/Attainment.
Brown County		Unclassifiable/Attainment.
Butler County		Unclassifiable/Attainment.
Chase County		Unclassifiable/Attainment.
Chautauqua County		Unclassifiable/Attainment.
Cherokee County		Unclassifiable/Attainment.
Cheyenne County		Unclassifiable/Attainment.
Clark County		Unclassifiable/Attainment.
Clay County		Unclassifiable/Attainment.
Cloud County		Unclassifiable/Attainment.
Coffey County		Unclassifiable/Attainment.
Comanche County		Unclassifiable/Attainment.
Cowley County		Unclassifiable/Attainment.
Crawford County		Unclassifiable/Attainment.
Decatur County		Unclassifiable/Attainment.
Dickinson County		Unclassifiable/Attainment.
Doniphan County		Unclassifiable/Attainment.
Douglas County		Unclassifiable/Attainment.
Edwards County		Unclassifiable/Attainment.
Elk County		Unclassifiable/Attainment.

Kansas—$PM_{2.5}$ (Annual NAAQS)

Designated area	Designation [a]	
	Date[1]	Type
Ellis County		Unclassifiable/Attainment.
Ellsworth County		Unclassifiable/Attainment.
Finney County		Unclassifiable/Attainment.
Ford County		Unclassifiable/Attainment.
Franklin County		Unclassifiable/Attainment.
Geary County		Unclassifiable/Attainment.
Gove County		Unclassifiable/Attainment.
Graham County		Unclassifiable/Attainment.
Grant County		Unclassifiable/Attainment.
Gray County		Unclassifiable/Attainment.
Greeley County		Unclassifiable/Attainment.
Greenwood County		Unclassifiable/Attainment.
Hamilton County		Unclassifiable/Attainment.
Harper County		Unclassifiable/Attainment.
Harvey County		Unclassifiable/Attainment.
Haskell County		Unclassifiable/Attainment.
Hodgeman County		Unclassifiable/Attainment.
Jackson County		Unclassifiable/Attainment.
Jefferson County		Unclassifiable/Attainment.
Jewell County		Unclassifiable/Attainment.
Johnson County		Unclassifiable/Attainment.
Kearny County		Unclassifiable/Attainment.
Kingman County		Unclassifiable/Attainment.
Kiowa County		Unclassifiable/Attainment.
Labette County		Unclassifiable/Attainment.
Lane County		Unclassifiable/Attainment.
Leavenworth County		Unclassifiable/Attainment.
Lincoln County		Unclassifiable/Attainment.
Linn County		Unclassifiable/Attainment.
Logan County		Unclassifiable/Attainment.
Lyon County		Unclassifiable/Attainment.
McPherson County		Unclassifiable/Attainment.
Marion County		Unclassifiable/Attainment.
Marshall County		Unclassifiable/Attainment.
Meade County		Unclassifiable/Attainment.
Miami County		Unclassifiable/Attainment.
Mitchell County		Unclassifiable/Attainment.
Montgomery County		Unclassifiable/Attainment.
Morris County		Unclassifiable/Attainment.
Morton County		Unclassifiable/Attainment.
Nemaha County		Unclassifiable/Attainment.
Neosho County		Unclassifiable/Attainment.
Ness County		Unclassifiable/Attainment.
Norton County		Unclassifiable/Attainment.
Osage County		Unclassifiable/Attainment.
Osborne County		Unclassifiable/Attainment.
Ottawa County		Unclassifiable/Attainment.
Pawnee County		Unclassifiable/Attainment.
Phillips County		Unclassifiable/Attainment.
Pottawatomie County		Unclassifiable/Attainment.
Pratt County		Unclassifiable/Attainment.
Rawlins County		Unclassifiable/Attainment.
Reno County		Unclassifiable/Attainment.
Republic County		Unclassifiable/Attainment.
Rice County		Unclassifiable/Attainment.
Riley County		Unclassifiable/Attainment.
Rooks County		Unclassifiable/Attainment.
Rush County		Unclassifiable/Attainment.
Russell County		Unclassifiable/Attainment.
Saline County		Unclassifiable/Attainment.
Scott County		Unclassifiable/Attainment.
Sedgwick County		Unclassifiable/Attainment.
Seward County		Unclassifiable/Attainment.
Shawnee County		Unclassifiable/Attainment.
Sheridan County		Unclassifiable/Attainment.
Sherman County		Unclassifiable/Attainment.
Smith County		Unclassifiable/Attainment.
Stafford County		Unclassifiable/Attainment.
Stanton County		Unclassifiable/Attainment.
Stevens County		Unclassifiable/Attainment.
Sumner County		Unclassifiable/Attainment.

Kansas—$PM_{2.5}$ (Annual NAAQS)

Designated area	Designation [a]	
	Date [1]	Type
Thomas County		Unclassifiable/Attainment.
Trego County		Unclassifiable/Attainment.
Wabaunsee County		Unclassifiable/Attainment.
Wallace County		Unclassifiable/Attainment.
Washington County		Unclassifiable/Attainment.
Wichita County		Unclassifiable/Attainment.
Wilson County		Unclassifiable/Attainment.
Woodson County		Unclassifiable/Attainment.
Wyandotte County		Unclassifiable/Attainment.

[a] Includes Indian Country located in each county or area, except as otherwise specified.
[1] This date is 90 days after January 5, 2005, unless otherwise noted.

Kansas—$PM_{2.5}$ [24-hour NAAQS]

Designated area	Designation for the 1997 NAAQS [a]		Designation for the 2006 NAAQS [a]	
	Date [1]	Type	Date [2]	Type
Statewide:				
Allen County		Unclassifiable/Attainment.		Unclassifiable/Attainment.
Anderson County		Unclassifiable/Attainment.		Unclassifiable/Attainment.
Atchison County		Unclassifiable/Attainment.		Unclassifiable/Attainment.
Barber County		Unclassifiable/Attainment.		Unclassifiable/Attainment.
Barton County		Unclassifiable/Attainment.		Unclassifiable/Attainment.
Bourbon County		Unclassifiable/Attainment.		Unclassifiable/Attainment.
Brown County		Unclassifiable/Attainment.		Unclassifiable/Attainment.
Butler County		Unclassifiable/Attainment.		Unclassifiable/Attainment.
Chase County		Unclassifiable/Attainment.		Unclassifiable/Attainment.
Chautauqua County		Unclassifiable/Attainment.		Unclassifiable/Attainment.
Cherokee County		Unclassifiable/Attainment.		Unclassifiable/Attainment.
Cheyenne County		Unclassifiable/Attainment.		Unclassifiable/Attainment.
Clark County		Unclassifiable/Attainment.		Unclassifiable/Attainment.
Clay County		Unclassifiable/Attainment.		Unclassifiable/Attainment.
Cloud County		Unclassifiable/Attainment.		Unclassifiable/Attainment.
Coffey County		Unclassifiable/Attainment.		Unclassifiable/Attainment.
Comanche County		Unclassifiable/Attainment.		Unclassifiable/Attainment.
Cowley County		Unclassifiable/Attainment.		Unclassifiable/Attainment.
Crawford County		Unclassifiable/Attainment.		Unclassifiable/Attainment.
Decatur County		Unclassifiable/Attainment.		Unclassifiable/Attainment.
Dickinson County		Unclassifiable/Attainment.		Unclassifiable/Attainment.
Doniphan County		Unclassifiable/Attainment.		Unclassifiable/Attainment.
Douglas County		Unclassifiable/Attainment.		Unclassifiable/Attainment.
Edwards County		Unclassifiable/Attainment.		Unclassifiable/Attainment.
Elk County		Unclassifiable/Attainment.		Unclassifiable/Attainment.
Ellis County		Unclassifiable/Attainment.		Unclassifiable/Attainment.

Kansas—$PM_{2.5}$ [24-hour NAAQS]

Designated area	Designation for the 1997 NAAQS [a]		Designation for the 2006 NAAQS [a]	
	Date [1]	Type	Date [2]	Type
Ellsworth County		Unclassifiable/Attainment.		Unclassifiable/Attainment.
Finney County		Unclassifiable/Attainment.		Unclassifiable/Attainment.
Ford County		Unclassifiable/Attainment.		Unclassifiable/Attainment.
Franklin County		Unclassifiable/Attainment.		Unclassifiable/Attainment.
Geary County		Unclassifiable/Attainment.		Unclassifiable/Attainment.
Gove County		Unclassifiable/Attainment.		Unclassifiable/Attainment.
Graham County		Unclassifiable/Attainment.		Unclassifiable/Attainment.
Grant County		Unclassifiable/Attainment.		Unclassifiable/Attainment.
Gray County		Unclassifiable/Attainment.		Unclassifiable/Attainment.
Greeley County		Unclassifiable/Attainment.		Unclassifiable/Attainment.
Greenwood County		Unclassifiable/Attainment.		Unclassifiable/Attainment.
Hamilton County		Unclassifiable/Attainment.		Unclassifiable/Attainment.
Harper County		Unclassifiable/Attainment.		Unclassifiable/Attainment.
Harvey County		Unclassifiable/Attainment.		Unclassifiable/Attainment.
Haskell County		Unclassifiable/Attainment.		Unclassifiable/Attainment.
Hodgeman County		Unclassifiable/Attainment.		Unclassifiable/Attainment.
Jackson County		Unclassifiable/Attainment.		Unclassifiable/Attainment.
Jefferson County		Unclassifiable/Attainment.		Unclassifiable/Attainment.
Jewell County		Unclassifiable/Attainment.		Unclassifiable/Attainment.
Johnson County		Unclassifiable/Attainment.		Unclassifiable/Attainment.
Kearny County		Unclassifiable/Attainment.		Unclassifiable/Attainment.
Kingman County		Unclassifiable/Attainment.		Unclassifiable/Attainment.
Kiowa County		Unclassifiable/Attainment.		Unclassifiable/Attainment.
Labette County		Unclassifiable/Attainment.		Unclassifiable/Attainment.
Lane County		Unclassifiable/Attainment.		Unclassifiable/Attainment.
Leavenworth County		Unclassifiable/Attainment.		Unclassifiable/Attainment.
Lincoln County		Unclassifiable/Attainment.		Unclassifiable/Attainment.
Linn County		Unclassifiable/Attainment.		Unclassifiable/Attainment.
Logan County		Unclassifiable/Attainment.		Unclassifiable/Attainment.
Lyon County		Unclassifiable/Attainment.		Unclassifiable/Attainment.
McPherson County		Unclassifiable/Attainment.		Unclassifiable/Attainment.
Marion County		Unclassifiable/Attainment.		Unclassifiable/Attainment.
Marshall County		Unclassifiable/Attainment.		Unclassifiable/Attainment.
Meade County		Unclassifiable/Attainment.		Unclassifiable/Attainment.
Miami County		Unclassifiable/Attainment.		Unclassifiable/Attainment.

Kansas—$PM_{2.5}$ [24-hour NAAQS]

Designated area	Designation for the 1997 NAAQS [a]		Designation for the 2006 NAAQS [a]	
	Date [1]	Type	Date [2]	Type
Mitchell County		Unclassifiable/Attainment.		Unclassifiable/Attainment.
Montgomery County		Unclassifiable/Attainment.		Unclassifiable/Attainment.
Morris County		Unclassifiable/Attainment.		Unclassifiable/Attainment.
Morton County		Unclassifiable/Attainment.		Unclassifiable/Attainment.
Nemaha County		Unclassifiable/Attainment.		Unclassifiable/Attainment.
Neosho County		Unclassifiable/Attainment.		Unclassifiable/Attainment.
Ness County		Unclassifiable/Attainment.		Unclassifiable/Attainment.
Norton County		Unclassifiable/Attainment.		Unclassifiable/Attainment.
Osage County		Unclassifiable/Attainment.		Unclassifiable/Attainment.
Osborne County		Unclassifiable/Attainment.		Unclassifiable/Attainment.
Ottawa County		Unclassifiable/Attainment.		Unclassifiable/Attainment.
Pawnee County		Unclassifiable/Attainment.		Unclassifiable/Attainment.
Phillips County		Unclassifiable/Attainment.		Unclassifiable/Attainment.
Pottawatomie County		Unclassifiable/Attainment.		Unclassifiable/Attainment.
Pratt County		Unclassifiable/Attainment.		Unclassifiable/Attainment.
Rawlins County		Unclassifiable/Attainment.		Unclassifiable/Attainment.
Reno County		Unclassifiable/Attainment.		Unclassifiable/Attainment.
Republic County		Unclassifiable/Attainment.		Unclassifiable/Attainment.
Rice County		Unclassifiable/Attainment.		Unclassifiable/Attainment.
Riley County		Unclassifiable/Attainment.		Unclassifiable/Attainment.
Rooks County		Unclassifiable/Attainment.		Unclassifiable/Attainment.
Rush County		Unclassifiable/Attainment.		Unclassifiable/Attainment.
Russell County		Unclassifiable/Attainment.		Unclassifiable/Attainment.
Saline County		Unclassifiable/Attainment.		Unclassifiable/Attainment.
Scott County		Unclassifiable/Attainment.		Unclassifiable/Attainment.
Sedgwick County		Unclassifiable/Attainment.		Unclassifiable/Attainment.
Seward County		Unclassifiable/Attainment.		Unclassifiable/Attainment.
Shawnee County		Unclassifiable/Attainment.		Unclassifiable/Attainment.
Sheridan County		Unclassifiable/Attainment.		Unclassifiable/Attainment.
Sherman County		Unclassifiable/Attainment.		Unclassifiable/Attainment.
Smith County		Unclassifiable/Attainment.		Unclassifiable/Attainment.
Stafford County		Unclassifiable/Attainment.		Unclassifiable/Attainment.
Stanton County		Unclassifiable/Attainment.		Unclassifiable/Attainment.
Stevens County		Unclassifiable/Attainment.		Unclassifiable/Attainment.
Sumner County		Unclassifiable/Attainment.		Unclassifiable/Attainment.

Kansas—$PM_{2.5}$ [24-hour NAAQS]

Designated area	Designation for the 1997 NAAQS [a]		Designation for the 2006 NAAQS [a]	
	Date [1]	Type	Date [2]	Type
Thomas County		Unclassifiable/Attainment.		Unclassifiable/Attainment.
Trego County		Unclassifiable/Attainment.		Unclassifiable/Attainment.
Wabaunsee County		Unclassifiable/Attainment.		Unclassifiable/Attainment.
Wallace County		Unclassifiable/Attainment.		Unclassifiable/Attainment.
Washington County		Unclassifiable/Attainment.		Unclassifiable/Attainment.
Wichita County		Unclassifiable/Attainment.		Unclassifiable/Attainment.
Wilson County		Unclassifiable/Attainment.		Unclassifiable/Attainment.
Woodson County		Unclassifiable/Attainment.		Unclassifiable/Attainment.
Wyandotte County		Unclassifiable/Attainment.		Unclassifiable/Attainment.

[a] Includes Indian Country located in each county or area, except as otherwise specified.
[1] This date is 90 days after January 5, 2005, unless otherwise noted.
[2] This date is 30 days after November 13, 2009, unless otherwise noted.

Kansas—2008 Lead NAAQS

Designated area	Designation for the 2008 NAAQS [a]	
	Date [1]	Type
Saline County, KS:		
Saline County (part)		Nonattainment.
Area bounded by Schilling Rd. on the north, ¼ mile west of S. Ohio St. on the east, Water Well Rd. on the south, and 9th Street on the west.		
Rest of State		Unclassifiable/Attainment.

[a] Includes Indian Country located in each county or area, except as otherwise specified.
[1] December 31, 2011 unless otherwise noted.

[48 FR 46783, Oct. 14, 1983, as amended at 48 FR 55287, Dec. 12, 1983; 50 FR 32569, Aug. 13, 1985; 51 FR 20971, June 10, 1986; 51 FR 25202, July 11, 1986; 54 FR 14959, Apr. 14, 1989; 55 FR 1423, Jan. 16, 1990; 56 FR 56760, Nov. 6, 1991; 57 FR 27939, June 23, 1992; 63 FR 31046, June 5, 1998; 65 FR 45226, July 20, 2000; 69 FR 23903, Apr. 30, 2004; 70 FR 974, Jan. 5, 2005; 70 FR 22802, May 3, 2005; 70 FR 44475, Aug. 3, 2005; 74 FR 58731, Nov. 13, 2009; 76 FR 72109, Nov. 22, 2011; 77 FR 9555, Feb. 17, 2012]

EFFECTIVE DATE NOTE: At 77 FR 30121, May 21, 2012, § 81.317 was amended by revising the table heading for ''Kansas—Ozone (8-Hour Standard)'' to read ''Kansas—1997 8-Hour Ozone NAAQS (Primary and Secondary)''; and by adding a new table entitled ''Kansas—2008 8-Hour Ozone NAAQS (Primary and Secondary)'' following the newly designated table ''Kansas—1997 8-Hour Ozone NAAQS (Primary and Secondary)'' effective July 20. 2012. For the convenience of the user, the added text is set forth as follows:

§ 81.317 Kansas.

* * * * *

Kansas—2008 8-Hour Ozone NAAQS (Primary and secondary)

Designated area	Designation		Classification	
	Date [1]	Type	Date [1]	Type
Statewide and Any Areas of Indian Country:		Unclassifiable/Attainment		
Allen County				
Anderson County				
Atchison County				
Barber County				
Barton County				
Bourbon County				
Brown County				
Butler County				

Kansas—2008 8-Hour Ozone NAAQS (Primary and secondary)

Designated area	Designation		Classification	
	Date [1]	Type	Date [1]	Type
Chase County				
Chautauqua County				
Cherokee County				
Cheyenne County				
Clark County				
Clay County				
Cloud County				
Coffey County				
Comanche County				
Cowley County				
Crawford County				
Decatur County				
Dickinson County				
Doniphan County				
Douglas County				
Edwards County				
Elk County				
Ellis County				
Ellsworth County				
Finney County				
Ford County				
Franklin County				
Geary County				
Gove County				
Graham County				
Grant County				
Gray County				
Greeley County				
Greenwood County				
Hamilton County				
Harper County				
Harvey County				
Haskell County				
Hodgeman County				
Jackson County				
Jefferson County				
Jewell County				
Johnson County				
Kearny County				
Kingman County				
Kiowa County				
Labette County				
Lane County				
Leavenworth County				
Lincoln County				
Linn County				
Logan County				
Lyon County				
McPherson County				
Marion County				
Marshall County				
Meade County				
Miami County				
Mitchell County				
Montgomery County				
Morris County				
Morton County				
Nemaha County				
Neosho County				
Ness County				
Norton County				
Osage County				
Osborne County				
Ottawa County				
Pawnee County				
Phillips County				
Pottawatomie County				
Pratt County				
Rawlins County				
Reno County				
Republic County				

Kansas—2008 8-Hour Ozone NAAQS (Primary and secondary)

Designated area	Designation		Classification	
	Date [1]	Type	Date [1]	Type
Rice County				
Riley County				
Rooks County				
Rush County				
Russell County				
Saline County				
Scott County				
Sedgwick County				
Seward County				
Shawnee County				
Sheridan County				
Sherman County				
Smith County				
Stafford County				
Stanton County				
Stevens County				
Sumner County				
Thomas County				
Trego County				
Wabaunsee County				
Wallace County				
Washington County				
Wichita County				
Wilson County				
Woodson County				
Wyandotte County				

[1] This date is July 20, 2012, unless otherwise noted.

* * * * *

§ 81.318 Kentucky.

Kentucky—TSP

Designated area	Does not meet primary standards	Does not meet secondary standards	Cannot be classified	Better than national standards
Adair County				X
Allen County				X
Anderson County				X
Ballard County				X
Barren County				X
Bath County				X
Bell County			X	
Boone County				X
Bourbon County				X
Boyd County			X	
Boyle County				X
Bracken County				X
Breathitt County				X
Breckinridge County				X
That portion of Bullitt Co. in Shephardsville			X	
Rest of Bullitt Co				X
Butler County				X
Caldwell County				X
Calloway County				X
That portion of Campbell Co. in Newport			X	
Rest of Campbell Co				X
Carlisle County				X
Carroll County				X
Carter County				X
Casey County				X
Christian County				X
Clark County				X
Clay County				X
Clinton County				X
Crittenden County				X
Cumberland County				X

Kentucky—TSP

Designated area	Does not meet primary standards	Does not meet secondary standards	Cannot be classified	Better than national standards
That portion of Daviess Co. in Owensboro			X	
Rest of Daviess Co				X
Edmonson County				X
Elliott County				X
Estill County				X
Fayette County				X
Fleming County				X
Floyd County				X
Franklin County				X
Fulton County				X
Gallatin County				X
Garrard County				X
Grant County				X
Graves County				X
Grayson County				X
Green County				X
Greenup County				X
Hancock County				X
Hardin County				X
Harlan County				X
Harrison County				X
Hart County				X
That portion of Henderson Co. in Henderson			X	
Rest of Henderson Co				X
Henry County				X
Hickman County				X
Hopkins County				X
Jackson County				X
Jefferson County			X	
Jessamine County				X
Johnson County				X
Kenton County				X
Knott County				X
Knox County				X
LaRue County				X
Laurel County				X
That Portion of Lawrence Co. in Louisa			X	
Rest of Lawrence Co				X
Lee County				X
Leslie County				X
Letcher County				X
Lewis County				X
Lincoln County				X
Livingston County				X
Logan County				X
Lyon County				X
McCracken County			X	
McCreary County				X
McLean County				X
That portion of Madison Co. in Richmond			X	
Rest of Madison Co				X
Magoffin County				X
Marion County				X
Marshall County				X
Martin County				X
Mason County				X
Meade County				X
Menifee County				X
Mercer County				X
Metcalfe County				X
Monroe County				X
Montgomery County				X
Morgan County				X
Muhlenberg County			X	
Nelson County				X
Nicholas County				X
Ohio County				X
Oldham County				X
Owen County				X
Owsley County				X

Kentucky—TSP

Designated area	Does not meet primary standards	Does not meet secondary standards	Cannot be classified	Better than national standards
Pendleton County				X
That portion of Perry Co. in Hazard			X	
Rest of Perry Co				X
That portion of Pike Co. in Pikeville			X	
Rest of Pike Co				X
Powell County				X
Pulaski County				X
Robertson County				X
Rockcastle County				X
Rowan County				X
Russell County				X
Scott County				X
Shelby County				X
Simpson County				X
Spencer County				X
Taylor County				X
Todd County				X
Trigg County				X
Trimble County				X
Union County				X
Warren County				X
Washington County				X
Wayne County				X
Webster County				X
That portion of Whitley Co. in Corbin			X	
Rest of Whitley Co				X
Wolfe County				X
Woodford County				X

Kentucky—SO_2

Designated area	Does not meet primary standards	Does not meet secondary standards	Cannot be classified	Better than national standards
Adair County				X
Allen County				X
Anderson County				X
Ballard County				X
Barren County				X
Bath County				X
Bell County				X
Boone County				X
Bourbon County				X
That portion of Boyd County south of UTM northing line 4251 km				X
Rest of Boyd County				X
Boyle County				X
Bracken County				X
Breathitt County				X
Breckinridge County				X
Bullitt County				X
Butler County				X
Caldwell County				X
Calloway County				X
Campbell County				X
Carlisle County				X
Carroll County				X
Carter County				X
Casey County				X
Christian County				X
Clark County				X
Clay County				X
Clinton County				X
Crittenden County				X
Cumberland County				X
Daviess County				X
Edmonson County				X
Elliott County				X

Kentucky—SO_2

Designated area	Does not meet primary standards	Does not meet secondary standards	Cannot be classified	Better than national standards
Estill County				X
Fayette County				X
Fleming County				X
Floyd County				X
Franklin County				X
Fulton County				X
Gallatin County				X
Garrard County				X
Grant County				X
Graves County				X
Grayson County				X
Green County				X
Greenup County				X
Hancock County				X
Hardin County				X
Harlan County				X
Harrison County				X
Hart County				X
Henderson County				X
Henry County				X
Hickman County				X
Hopkins County				X
Jackson County				X
Jefferson County				X
Jessamine County				X
Johnson County				X
Kenton County				X
Knott County				X
Knox County				X
LaRue County				X
Laurel County				X
Lawrence County				X
Lee County				X
Leslie County				X
Letcher County				X
Lewis County				X
Lincoln County				X
Livingston County				X
Logan County				X
Lyon County				X
McCracken County				X
McCreary County				X
McLean County				X
Madison County				X
Magoffin County				X
Marion County				X
Marshall County				X
Martin County				X
Mason County				X
Meade County				X
Menifee County				X
Mercer County				X
Metcalfe County				X
Monroe County				X
Montgomery County				X
Morgan County				X
Muhlenberg County				X
Nelson County				X
Nicholas County				X
Ohio County				X
Oldham County				X
Owen County				X
Owsley County				X
Pendleton County				X
Perry County				X
Pike County				X
Powell County				X
Pulaski County				X
Robertson County				X
Rockcastle County				X

Kentucky—SO_2

Designated area	Does not meet primary standards	Does not meet secondary standards	Cannot be classified	Better than national standards
Rowan County				X
Russell County				X
Scott County				X
Shelby County				X
Simpson County				X
Spencer County				X
Taylor County				X
Todd County				X
Trigg County				X
Trimble County				X
Union County				X
Warren County				X
Washington County				X
Wayne County				X
Webster County				X
Whitley County				X
Wolfe County				X
Woodford County				X

Kentucky—Carbon Monoxide

Designated Area	Designation		Classification	
	Date [1]	Type	Date [1]	Type
Adair County		Unclassifiable/ Attainment		
Allen County		Unclassifiable/ Attainment		
Anderson County		Unclassifiable/ Attainment		
Ballard County		Unclassifiable/ Attainment		
Barren County		Unclassifiable/ Attainment		
Bath County		Unclassifiable/ Attainment		
Bell County		Unclassifiable/ Attainment		
Boone County		Unclassifiable/ Attainment		
Bourbon County		Unclassifiable/ Attainment		
Boyd County		Unclassifiable/ Attainment		
Boyle County		Unclassifiable/ Attainment		
Bracken County		Unclassifiable/ Attainment		
Breathitt County		Unclassifiable/ Attainment		
Breckinridge County		Unclassifiable/ Attainment		
Bullitt County		Unclassifiable/ Attainment		
Butler County		Unclassifiable/ Attainment		
Caldwell County		Unclassifiable/ Attainment		
Calloway County		Unclassifiable/ Attainment		
Campbell County		Unclassifiable/ Attainment		
Carlisle County		Unclassifiable/ Attainment		
Carroll County		Unclassifiable/ Attainment		
Carter County		Unclassifiable/ Attainment		
Casey County		Unclassifiable/ Attainment		
Christian County		Unclassifiable/ Attainment		
Clark County		Unclassifiable/ Attainment		
Clay County		Unclassifiable/ Attainment		
Clinton County		Unclassifiable/ Attainment		
Crittenden County		Unclassifiable/ Attainment		
Cumberland County		Unclassifiable/ Attainment		
Daviess County		Unclassifiable/ Attainment		
Edmonson County		Unclassifiable/ Attainment		
Elliott County		Unclassifiable/ Attainment		
Estill County		Unclassifiable/ Attainment		
Fayette County		Unclassifiable/ Attainment		
Fleming County		Unclassifiable/ Attainment		
Floyd County		Unclassifiable/ Attainment		
Franklin County		Unclassifiable/ Attainment		
Fulton County		Unclassifiable/ Attainment		
Gallatin County		Unclassifiable/ Attainment		
Garrard County		Unclassifiable/ Attainment		
Grant County		Unclassifiable/ Attainment		
Graves County		Unclassifiable/ Attainment		
Grayson County		Unclassifiable/ Attainment		
Green County		Unclassifiable/ Attainment		
Greenup County		Unclassifiable/ Attainment		

Kentucky—Carbon Monoxide

Designated Area	Designation		Classification	
	Date [1]	Type	Date [1]	Type
Hancock County		Unclassifiable/ Attainment		
Hardin County		Unclassifiable/ Attainment		
Harlan County		Unclassifiable/ Attainment		
Harrison County		Unclassifiable/ Attainment		
Hart County		Unclassifiable/ Attainment		
Henderson County		Unclassifiable/ Attainment		
Henry County		Unclassifiable/ Attainment		
Hickman County		Unclassifiable/ Attainment		
Hopkins County		Unclassifiable/ Attainment		
Jackson County		Unclassifiable/ Attainment		
Jefferson County		Unclassifiable/ Attainment		
Jessamine County		Unclassifiable/ Attainment		
Johnson County		Unclassifiable/ Attainment		
Kenton County		Unclassifiable/ Attainment		
Knott County		Unclassifiable/ Attainment		
Knox County		Unclassifiable/ Attainment		
Larue County		Unclassifiable/ Attainment		
Laurel County		Unclassifiable/ Attainment		
Lawrence County		Unclassifiable/ Attainment		
Lee County		Unclassifiable/ Attainment		
Leslie County		Unclassifiable/ Attainment		
Letcher County		Unclassifiable/ Attainment		
Lewis County		Unclassifiable/ Attainment		
Lincoln County		Unclassifiable/ Attainment		
Livingston County		Unclassifiable/ Attainment		
Logan County		Unclassifiable/ Attainment		
Lyon County		Unclassifiable/ Attainment		
Madison County		Unclassifiable/ Attainment		
Magoffin County		Unclassifiable/ Attainment		
Marion County		Unclassifiable/ Attainment		
Marshall County		Unclassifiable/ Attainment		
Martin County		Unclassifiable/ Attainment		
Mason County		Unclassifiable/ Attainment		
McCracken County		Unclassifiable/ Attainment		
McCreary County		Unclassifiable/ Attainment		
McLean County		Unclassifiable/ Attainment		
Meade County		Unclassifiable/ Attainment		
Menifee County		Unclassifiable/ Attainment		
Mercer County		Unclassifiable/ Attainment		
Metcalfe County		Unclassifiable/ Attainment		
Monroe County		Unclassifiable/ Attainment		
Montgomery County		Unclassifiable/ Attainment		
Morgan County		Unclassifiable/ Attainment		
Muhlenberg County		Unclassifiable/ Attainment		
Nelson County		Unclassifiable/ Attainment		
Nicholas County		Unclassifiable/ Attainment		
Ohio County		Unclassifiable/ Attainment		
Oldham County		Unclassifiable/ Attainment		
Owen County		Unclassifiable/ Attainment		
Owsley County		Unclassifiable/ Attainment		
Pendleton County		Unclassifiable/ Attainment		
Perry County		Unclassifiable/ Attainment		
Pike County		Unclassifiable/ Attainment		
Powell County		Unclassifiable/ Attainment		
Pulaski County		Unclassifiable/ Attainment		
Robertson County		Unclassifiable/ Attainment		
Rockcastle County		Unclassifiable/ Attainment		
Rowan County		Unclassifiable/ Attainment		
Russell County		Unclassifiable/ Attainment		
Scott County		Unclassifiable/ Attainment		
Shelby County		Unclassifiable/ Attainment		
Simpson County		Unclassifiable/ Attainment		
Spencer County		Unclassifiable/ Attainment		
Taylor County		Unclassifiable/ Attainment		
Todd County		Unclassifiable/ Attainment		
Trigg County		Unclassifiable/ Attainment		
Trimble County		Unclassifiable/ Attainment		
Union County		Unclassifiable/ Attainment		
Warren County		Unclassifiable/ Attainment		
Washington County		Unclassifiable/ Attainment		
Wayne County		Unclassifiable/ Attainment		

Kentucky—Carbon Monoxide

Designated Area	Designation		Classification	
	Date [1]	Type	Date [1]	Type
Webster County	.....	Unclassifiable/ Attainment		
Whitley County	.....	Unclassifiable/ Attainment		
Wolfe County	.....	Unclassifiable/ Attainment		
Woodford County	.....	Unclassifiable/ Attainment		

[1] This date is November 15, 1990, unless otherwise noted.

Kentucky—Ozone (1-Hour Standard)[2]

Designated area	Designation		Classification	
	Date [1]	Type	Date [1]	Type
Cincinnati-Hamilton Area:				
Boone County	7/5/00	Attainment		
Campbell County	7/5/00	Attainment		
Kenton County	7/5/00	Attainment		
Edmonson County Area:				
Edmonson County	.....	Unclassifiable/Attainment		
Louisville Area:				
Bullitt County	10/23/01	Attainment		
Jefferson County	10/23/01	Attainment		
Oldham County	10/23/01	Attainment		
Owensboro Area:				
Daviess County	.....	Unclassifiable/Attainment		
Hancock County	.....	Unclassifiable/Attainment		
The area boundary is as follows: Beginning at the Intersection of U.S. 60 and the Hancock-Daviess County Line; proceeding east along U.S. 60 to the intersection of Yellow Creek and U.S. 60; proceeding north and west along Yellow Creek to the confluence of the Ohio River; proceeding west along the Ohio River to the confluence of Blackford Creek; proceeding south and east along Blackford Creek to the beginning.				
Adair County	.....	Unclassifiable/Attainment		
Allen County	.....	Unclassifiable/Attainment		
Anderson County	.....	Unclassifiable/Attainment		
Ballard County	.....	Unclassifiable/Attainment		
Barren County	.....	Unclassifiable/Attainment		
Bath County	.....	Unclassifiable/Attainment		
Bell County	.....	Unclassifiable/Attainment		
Bourbon County	.....	Unclassifiable/Attainment		
Boyd County	.....	Unclassifiable/Attainment		
Boyle County	.....	Unclassifiable/Attainment		
Bracken County	.....	Unclassifiable/Attainment		
Breathitt County	.....	Unclassifiable/Attainment		
Breckinridge County	.....	Unclassifiable/Attainment		
Bullitt County (part)				
Remainder of county	.....	Unclassifiable/Attainment		
Butler County	.....	Unclassifiable/Attainment		
Caldwell County	.....	Unclassifiable/Attainment		
Calloway County	.....	Unclassifiable/Attainment		
Carlisle County	.....	Unclassifiable/Attainment		
Carroll County	.....	Unclassifiable/Attainment		
Carter County	.....	Unclassifiable/Attainment		
Casey County	.....	Unclassifiable/Attainment		
Christian County	.....	Unclassifiable/Attainment		
Clark County	.....	Unclassifiable/Attainment		
Clay County	.....	Unclassifiable/Attainment		
Clinton County	.....	Unclassifiable/Attainment		
Crittenden County	.....	Unclassifiable/Attainment		
Cumberland County	.....	Unclassifiable/Attainment		
Elliott County	.....	Unclassifiable/Attainment		
Estill County	.....	Unclassifiable/Attainment		
Fayette County	.....	Unclassifiable/Attainment		
Fleming County	.....	Unclassifiable/Attainment		

Kentucky—Ozone (1-Hour Standard)[2]

Designated area	Designation		Classification	
	Date [1]	Type	Date [1]	Type
Floyd County		Unclassifiable/Attainment		
Franklin County		Unclassifiable/Attainment		
Fulton County		Unclassifiable/Attainment		
Gallatin County		Unclassifiable/Attainment		
Garrard County		Unclassifiable/Attainment		
Grant County		Unclassifiable/Attainment		
Graves County		Unclassifiable/Attainment		
Grayson County		Unclassifiable/Attainment		
Green County		Unclassifiable/Attainment		
Greenup County		Unclassifiable/Attainment		
Hancock County (part)				
Remainder of county		Unclassifiable/Attainment		
Hardin County		Unclassifiable/Attainment		
Harlan County		Unclassifiable/Attainment		
Harrison County		Unclassifiable/Attainment		
Hart County		Unclassifiable/Attainment		
Henderson County		Unclassifiable/Attainment		
Henry County		Unclassifiable/Attainment		
Hickman County		Unclassifiable/Attainment		
Hopkins County		Unclassifiable/Attainment		
Jackson County		Unclassifiable/Attainment		
Jessamine County		Unclassifiable/Attainment		
Johnson County		Unclassifiable/Attainment		
Knott County		Unclassifiable/Attainment		
Knox County		Unclassifiable/Attainment		
Larue County		Unclassifiable/Attainment		
Laurel County		Unclassifiable/Attainment		
Lawrence County		Unclassifiable/Attainment		
Lee County		Unclassifiable/Attainment		
Leslie County		Unclassifiable/Attainment		
Letcher County		Unclassifiable/Attainment		
Lewis County		Unclassifiable/Attainment		
Lincoln County		Unclassifiable/Attainment		
Livingston County		Unclassifiable/Attainment		
Logan County		Unclassifiable/Attainment		
Lyon County		Unclassifiable/Attainment		
Madison County		Unclassifiable/Attainment		
Magoffin County		Unclassifiable/Attainment		
Marion County		Unclassifiable/Attainment		
Marshall County		Unclassifiable/Attainment		
Martin County		Unclassifiable/Attainment		
Mason County		Unclassifiable/Attainment		
McCracken County		Unclassifiable/Attainment		
McCreary County		Unclassifiable/Attainment		
McLean County		Unclassifiable/Attainment		
Meade County		Unclassifiable/Attainment		
Menifee County		Unclassifiable/Attainment		
Mercer County		Unclassifiable/Attainment		
Metcalfe County		Unclassifiable/Attainment		
Monroe County		Unclassifiable/Attainment		
Montgomery County		Unclassifiable/Attainment		
Morgan County		Unclassifiable/Attainment		
Muhlenberg County		Unclassifiable/Attainment		
Nelson County		Unclassifiable/Attainment		
Nicholas County		Unclassifiable/Attainment		
Ohio County		Unclassifiable/Attainment		
Oldham County (part)				
Remainder of county		Unclassifiable/Attainment		
Owen County		Unclassifiable/Attainment		
Owsley County		Unclassifiable/Attainment		
Pendleton County		Unclassifiable/Attainment		
Perry County		Unclassifiable/Attainment		
Pike County		Unclassifiable/Attainment		
Powell County		Unclassifiable/Attainment		
Pulaski County		Unclassifiable/Attainment		
Robertson County		Unclassifiable/Attainment		
Rockcastle County		Unclassifiable/Attainment		
Rowan County		Unclassifiable/Attainment		
Russell County		Unclassifiable/Attainment		
Scott County		Unclassifiable/Attainment		
Shelby County		Unclassifiable/Attainment		

Kentucky—Ozone (1-Hour Standard)[2]

Designated area	Designation		Classification	
	Date [1]	Type	Date [1]	Type
Simpson County		Unclassifiable/Attainment		
Spencer County		Unclassifiable/Attainment		
Taylor County		Unclassifiable/Attainment		
Todd County		Unclassifiable/Attainment		
Trigg County		Unclassifiable/Attainment		
Trimble County		Unclassifiable/Attainment		
Union County		Unclassifiable/Attainment		
Warren County		Unclassifiable/Attainment		
Washington County		Unclassifiable/Attainment		
Wayne County		Unclassifiable/Attainment		
Webster County		Unclassifiable/Attainment		
Whitley County		Unclassifiable/Attainment		
Wolfe County		Unclassifiable/Attainment		
Woodford County		Unclassifiable/Attainment		

[1] This date is October 18, 2000, unless otherwise noted.
[2] The 1-hour ozone standard is revoked effective June 15, 2005 for all areas in Kentucky. The Cincinnati-Hamilton, Edmonson Co, Huntington-Ashland, Lexington-Fayette, Louisville, Owensboro, and Paducah areas are maintenance areas for the 1-hour NAAQS for purposes of 40 CFR part 51 subpart X.

NO_2 (1971 Annual Standard)

Designated area	Does not meet primary standards	Cannot be classified or better than national standards
Statewide		X

Kentucky—NO_2 (2010 1-Hour Standard)

Designated area	Designation [a]	
	Date [1]	Type
Adair County		Unclassifiable/Attainment.
Allen County		Unclassifiable/Attainment.
Anderson County		Unclassifiable/Attainment.
Ballard County		Unclassifiable/Attainment.
Barren County		Unclassifiable/Attainment.
Bath County		Unclassifiable/Attainment.
Bell County		Unclassifiable/Attainment.
Boone County		Unclassifiable/Attainment.
Bourbon County		Unclassifiable/Attainment.
Boyd County		Unclassifiable/Attainment.
Boyle County		Unclassifiable/Attainment.
Bracken County		Unclassifiable/Attainment.
Breathitt County		Unclassifiable/Attainment.
Breckinridge County		Unclassifiable/Attainment.
Bullitt County		Unclassifiable/Attainment.
Butler County		Unclassifiable/Attainment.
Caldwell County		Unclassifiable/Attainment.
Calloway County		Unclassifiable/Attainment.
Campbell County		Unclassifiable/Attainment.
Carlisle County		Unclassifiable/Attainment.
Carroll County		Unclassifiable/Attainment.
Carter County		Unclassifiable/Attainment.
Casey County		Unclassifiable/Attainment.
Christian County		Unclassifiable/Attainment.
Clark County		Unclassifiable/Attainment.
Clay County		Unclassifiable/Attainment.
Clinton County		Unclassifiable/Attainment.
Crittenden County		Unclassifiable/Attainment.
Cumberland County		Unclassifiable/Attainment.
Daviess County		Unclassifiable/Attainment.
Edmonson County		Unclassifiable/Attainment.
Elliott County		Unclassifiable/Attainment.
Estill County		Unclassifiable/Attainment.
Fayette County		Unclassifiable/Attainment.
Fleming County		Unclassifiable/Attainment.
Floyd County		Unclassifiable/Attainment.
Franklin County		Unclassifiable/Attainment.
Fulton County		Unclassifiable/Attainment.

Kentucky—NO_2 (2010 1-Hour Standard)

Designated area	Designation [a]	
	Date [1]	Type
Gallatin County		Unclassifiable/Attainment.
Garrard County		Unclassifiable/Attainment.
Grant County		Unclassifiable/Attainment.
Graves County		Unclassifiable/Attainment.
Grayson County		Unclassifiable/Attainment.
Green County		Unclassifiable/Attainment.
Greenup County		Unclassifiable/Attainment.
Hancock County		Unclassifiable/Attainment.
Hardin County		Unclassifiable/Attainment.
Harlan County		Unclassifiable/Attainment.
Harrison County		Unclassifiable/Attainment.
Hart County		Unclassifiable/Attainment.
Henderson County		Unclassifiable/Attainment.
Henry County		Unclassifiable/Attainment.
Hickman County		Unclassifiable/Attainment.
Hopkins County		Unclassifiable/Attainment.
Jackson County		Unclassifiable/Attainment.
Jefferson County		Unclassifiable/Attainment.
Jessamine County		Unclassifiable/Attainment.
Johnson County		Unclassifiable/Attainment.
Kenton County		Unclassifiable/Attainment.
Knott County		Unclassifiable/Attainment.
Knox County		Unclassifiable/Attainment.
Larue County		Unclassifiable/Attainment.
Laurel County		Unclassifiable/Attainment.
Lawrence County		Unclassifiable/Attainment.
Lee County		Unclassifiable/Attainment.
Leslie County		Unclassifiable/Attainment.
Letcher County		Unclassifiable/Attainment.
Lewis County		Unclassifiable/Attainment.
Lincoln County		Unclassifiable/Attainment.
Livingston County		Unclassifiable/Attainment.
Logan County		Unclassifiable/Attainment.
Lyon County		Unclassifiable/Attainment.
McCracken County		Unclassifiable/Attainment.
McCreary County		Unclassifiable/Attainment.
McLean County		Unclassifiable/Attainment.
Madison County		Unclassifiable/Attainment.
Magoffin County		Unclassifiable/Attainment.
Marion County		Unclassifiable/Attainment.
Marshall County		Unclassifiable/Attainment.
Martin County		Unclassifiable/Attainment.
Mason County		Unclassifiable/Attainment.
Meade County		Unclassifiable/Attainment.
Menifee County		Unclassifiable/Attainment.
Mercer County		Unclassifiable/Attainment.
Metcalfe County		Unclassifiable/Attainment.
Monroe County		Unclassifiable/Attainment.
Montgomery County		Unclassifiable/Attainment.
Morgan County		Unclassifiable/Attainment.
Muhlenberg County		Unclassifiable/Attainment.
Nelson County		Unclassifiable/Attainment.
Nicholas County		Unclassifiable/Attainment.
Ohio County		Unclassifiable/Attainment.
Oldham County		Unclassifiable/Attainment.
Owen County		Unclassifiable/Attainment.
Owsley County		Unclassifiable/Attainment.
Pendleton County		Unclassifiable/Attainment.
Perry County		Unclassifiable/Attainment.
Pike County		Unclassifiable/Attainment.
Powell County		Unclassifiable/Attainment.
Pulaski County		Unclassifiable/Attainment.
Robertson County		Unclassifiable/Attainment.
Rockcastle County		Unclassifiable/Attainment.
Rowan County		Unclassifiable/Attainment.
Russell County		Unclassifiable/Attainment.
Scott County		Unclassifiable/Attainment.
Shelby County		Unclassifiable/Attainment.
Simpson County		Unclassifiable/Attainment.
Spencer County		Unclassifiable/Attainment.
Taylor County		Unclassifiable/Attainment.

Kentucky—NO_2 (2010 1-Hour Standard)

Designated area	Designation [a]	
	Date [1]	Type
Todd County		Unclassifiable/Attainment.
Trigg County		Unclassifiable/Attainment.
Trimble County		Unclassifiable/Attainment.
Union County		Unclassifiable/Attainment.
Warren County		Unclassifiable/Attainment.
Washington County		Unclassifiable/Attainment.
Wayne County		Unclassifiable/Attainment.
Webster County		Unclassifiable/Attainment.
Whitley County		Unclassifiable/Attainment.
Wolfe County		Unclassifiable/Attainment.
Woodford County		Unclassifiable/Attainment.

[a] Includes Indian Country located in each county or area, except as otherwise specified.
[1] This date is 90 days after October 31, 2011, unless otherwise noted.

Kentucky—Ozone (8-Hour Standard)

Designation	Designation [a]		Category/classification	
	Date [1]	Type	Date [1]	Type
Cincinnati-Hamilton, OH-KY-IN:				
Boone County	This action is effective 08/05/10	Attainment		
Campbell County	This action is effective 8/5/10	Attainment		
Kenton County	This action is effective 8/5/10	Attainment		
Clarkesville-Hopkinsville, TN-KY Area:				
Christian County	2/24/06	Attainment		
Louisville, KY–IN:				
Bullitt County	08/06/07	Attainment		
Jefferson County	08/06/07	Attainment		
Oldham County	08/06/07	Attainment		
Huntington-Ashland, WV–KY:				
Boyd County	09/04/07	Attainment		
Rest of State				
Adair County		Unclassifiable/Attainment		
Allen County		Unclassifiable/Attainment		
Anderson County		Unclassifiable/Attainment		
Ballard County		Unclassifiable/Attainment		
Barren County		Unclassifiable/Attainment		
Bath County		Unclassifiable/Attainment		
Bell County		Unclassifiable/Attainment		
Bourbon County		Unclassifiable/Attainment		
Boyle County		Unclassifiable/Attainment		
Bracken County		Unclassifiable/Attainment		
Breathitt County		Unclassifiable/Attainment		
Breckinridge County		Unclassifiable/Attainment		
Butler County		Unclassifiable/Attainment		
Caldwell County		Unclassifiable/Attainment		
Calloway County		Unclassifiable/Attainment		
Carlisle County		Unclassifiable/Attainment		
Carroll County		Unclassifiable/Attainment		
Carter County		Unclassifiable/Attainment		
Casey County		Unclassifiable/Attainment		
Clark County		Unclassifiable/Attainment		
Clay County		Unclassifiable/Attainment		
Clinton County		Unclassifiable/Attainment		
Crittenden County		Unclassifiable/Attainment		
Cumberland County		Unclassifiable/Attainment		
Daviess County		Unclassifiable/Attainment		
Edmonson County		Unclassifiable/Attainment		
Elliott County		Unclassifiable/Attainment		
Estill County		Unclassifiable/Attainment		
Fayette County		Unclassifiable/Attainment		

Kentucky—Ozone (8-Hour Standard)

Designation	Designation [a]		Category/classification	
	Date [1]	Type	Date [1]	Type
Fleming County		Unclassifiable/Attainment		
Floyd County		Unclassifiable/Attainment		
Franklin County		Unclassifiable/Attainment		
Fulton County		Unclassifiable/Attainment		
Gallatin County		Unclassifiable/Attainment		
Garrard County		Unclassifiable/Attainment		
Grant County		Unclassifiable/Attainment		
Graves County		Unclassifiable/Attainment		
Grayson County		Unclassifiable/Attainment		
Green County		Unclassifiable/Attainment		
Greenup County		Unclassifiable/Attainment		
Hancock County		Unclassifiable/Attainment		
Hardin County		Unclassifiable/Attainment		
Harlan County		Unclassifiable/Attainment		
Harrison County		Unclassifiable/Attainment		
Hart County		Unclassifiable/Attainment		
Henderson County		Unclassifiable/Attainment		
Henry County		Unclassifiable/Attainment		
Hickman County		Unclassifiable/Attainment		
Hopkins County		Unclassifiable/Attainment		
Jackson County		Unclassifiable/Attainment		
Jessamine County		Unclassifiable/Attainment		
Johnson County		Unclassifiable/Attainment		
Knott County		Unclassifiable/Attainment		
Knox County		Unclassifiable/Attainment		
Larue County		Unclassifiable/Attainment		
Laurel County		Unclassifiable/Attainment		
Lawrence County		Unclassifiable/Attainment		
Lee County.		Unclassifiable/Attainment		
Leslie County		Unclassifiable/Attainment		
Letcher County		Unclassifiable/Attainment		
Lewis County		Unclassifiable/Attainment		
Lincoln County		Unclassifiable/Attainment		
Livingston County		Unclassifiable/Attainment		
Logan County		Unclassifiable/Attainment		
Lyon County		Unclassifiable/Attainment		
Madison County		Unclassifiable/Attainment		
Magoffin County		Unclassifiable/Attainment		
Marion County		Unclassifiable/Attainment		
Marshall County		Unclassifiable/Attainment		
Martin County		Unclassifiable/Attainment		
Mason County		Unclassifiable/Attainment		
McCracken County		Unclassifiable/Attainment		
McCreary County		Unclassifiable/Attainment		
McLean County		Unclassifiable/Attainment		
Meade County		Unclassifiable/Attainment		
Menifee County		Unclassifiable/Attainment		
Mercer County		Unclassifiable/Attainment		
Metcalfe County		Unclassifiable/Attainment		
Monroe County		Unclassifiable/Attainment		
Montgomery County		Unclassifiable/Attainment		
Morgan County		Unclassifiable/Attainment		
Muhlenberg County		Unclassifiable/Attainment		
Nelson County		Unclassifiable/Attainment		
Nicholas County		Unclassifiable/Attainment		
Ohio County		Unclassifiable/Attainment		
Owen County		Unclassifiable/Attainment		
Owsley County		Unclassifiable/Attainment		
Pendleton County		Unclassifiable/Attainment		
Perry County		Unclassifiable/Attainment		
Pike County		Unclassifiable/Attainment		
Powell County		Unclassifiable/Attainment		
Pulaski County		Unclassifiable/Attainment		
Robertson County		Unclassifiable/Attainment		
Rockcastle County		Unclassifiable/Attainment		
Rowan County		Unclassifiable/Attainment		
Russell County		Unclassifiable/Attainment		
Scott County		Unclassifiable/Attainment		
Shelby County		Unclassifiable/Attainment		
Simpson County		Unclassifiable/Attainment		
Spencer County		Unclassifiable/Attainment		

Kentucky—Ozone (8-Hour Standard)

Designation	Designation [a]		Category/classification	
	Date [1]	Type	Date [1]	Type
Taylor County		Unclassifiable/Attainment		
Todd County		Unclassifiable/Attainment		
Trigg County		Unclassifiable/Attainment		
Trimble County		Unclassifiable/Attainment		
Union County		Unclassifiable/Attainment		
Warren County		Unclassifiable/Attainment		
Washington County		Unclassifiable/Attainment		
Wayne County		Unclassifiable/Attainment		
Webster County		Unclassifiable/Attainment		
Whitley County		Unclassifiable/Attainment		
Wolfe County		Unclassifiable/Attainment		
Woodford County		Unclassifiable/Attainment		

[a] Includes Indian Country located in each county or area, except as otherwise specified.
[1] This date is June 15, 2004, unless otherwise noted.

Kentucky—$PM_{2.5}$ (Annual NAAQS)

Designated area	Designation [a]	
	Date [1]	Type
Cincinnati-Hamilton, OH-KY-IN:		
Boone County	This action is effective December 15, 2011	Attainment.
Campbell County	This action is effective December 15, 2011	Attainment.
Kenton County	This action is effective December 15, 2011	Attainment.
Huntington-Ashland, WV-KY-OH:		
Boyd County		Nonattainment.
Lawrence County (part)		Nonattainment.
The area described by U.S. Census 2000 block group identifier 21–127–9901–6.		
Lexington, KY:		
Fayette County		Unclassifiable/Attainment.
Mercer County (part)		Unclassifiable/Attainment.
The area described by U.S. Census 2000 block group identifier 21–167–9605–1.		
Louisville, KY-IN:		
Bullitt County		Nonattainment.
Jefferson County		Nonattainment.
Rest of State:		
Adair County		Unclassifiable/Attainment.
Allen County		Unclassifiable/Attainment.
Anderson County		Unclassifiable/Attainment.
Ballard County		Unclassifiable/Attainment.
Barren County		Unclassifiable/Attainment.
Bath County		Unclassifiable/Attainment.
Bell County		Unclassifiable/Attainment.
Bourbon County		Unclassifiable/Attainment.
Boyle County		Unclassifiable/Attainment.
Bracken County		Unclassifiable/Attainment.
Breathitt County		Unclassifiable/Attainment.

Kentucky—$PM_{2.5}$ (Annual NAAQS)

Designated area	Designation [a]	
	Date [1]	Type
Breckinridge County		Unclassifiable/Attainment.
Butler County		Unclassifiable/Attainment.
Caldwell County		Unclassifiable/Attainment.
Calloway County		Unclassifiable/Attainment.
Carlisle County		Unclassifiable/Attainment.
Carroll County		Unclassifiable/Attainment.
Carter County		Unclassifiable/Attainment.
Casey County		Unclassifiable/Attainment.
Christian County		Unclassifiable/Attainment.
Clark County		Unclassifiable/Attainment.
Clay County		Unclassifiable/Attainment.
Clinton County		Unclassifiable/Attainment.
Crittenden County		Unclassifiable/Attainment.
Cumberland County		Unclassifiable/Attainment.
Daviess County		Unclassifiable/Attainment.
Edmonson County		Unclassifiable/Attainment.
Elliott County		Unclassifiable/Attainment.
Estill County		Unclassifiable/Attainment.
Fleming County		Unclassifiable/Attainment.
Floyd County		Unclassifiable/Attainment.
Franklin County		Unclassifiable/Attainment.
Fulton County		Unclassifiable/Attainment.
Gallatin County		Unclassifiable/Attainment.
Garrard County		Unclassifiable/Attainment.
Grant County		Unclassifiable/Attainment.
Graves County		Unclassifiable/Attainment.
Grayson County		Unclassifiable/Attainment.
Green County		Unclassifiable/Attainment.
Greenup County		Unclassifiable/Attainment.
Hancock County		Unclassifiable/Attainment.
Hardin County		Unclassifiable/Attainment.
Harlan County		Unclassifiable/Attainment.
Harrison County		Unclassifiable/Attainment.
Hart County		Unclassifiable/Attainment.
Henderson County		Unclassifiable/Attainment.
Henry County		Unclassifiable/Attainment.
Hickman County		Unclassifiable/Attainment.
Hopkins County		Unclassifiable/Attainment.
Jackson County		Unclassifiable/Attainment.
Jessamine County		Unclassifiable/Attainment.
Johnson County		Unclassifiable/Attainment.
Knott County		Unclassifiable/Attainment.
Knox County		Unclassifiable/Attainment.
Larue County		Unclassifiable/Attainment.
Laurel County		Unclassifiable/Attainment.
Lawrence County (remainder)		Unclassifiable/Attainment.
Lee County		Unclassifiable/Attainment.
Leslie County		Unclassifiable/Attainment.
Letcher County		Unclassifiable/Attainment.
Lewis County		Unclassifiable/Attainment.
Lincoln County		Unclassifiable/Attainment.
Livingston County		Unclassifiable/Attainment.
Logan County		Unclassifiable/Attainment.
Lyon County		Unclassifiable/Attainment.
McCracken County		Unclassifiable/Attainment.
McCreary County		Unclassifiable/Attainment.
McLean County		Unclassifiable/Attainment.
Madison County		Unclassifiable/Attainment.
Magoffin County		Unclassifiable/Attainment.
Marion County		Unclassifiable/Attainment.
Marshall County		Unclassifiable/Attainment.
Martin County		Unclassifiable/Attainment.
Mason County		Unclassifiable/Attainment.
Meade County		Unclassifiable/Attainment.
Menifee County		Unclassifiable/Attainment.
Mercer County (remainder)		Unclassifiable/Attainment.
Metcalfe County		Unclassifiable/Attainment.
Monroe County		Unclassifiable/Attainment.
Montgomery County		Unclassifiable/Attainment.
Morgan County		Unclassifiable/Attainment.
Muhlenberg County		Unclassifiable/Attainment.

Kentucky—$PM_{2.5}$ (Annual NAAQS)

Designated area	Designation [a]	
	Date [1]	Type
Nelson County		Unclassifiable/Attainment.
Nicholas County		Unclassifiable/Attainment.
Ohio County		Unclassifiable/Attainment.
Oldham County		Unclassifiable/Attainment.
Owen County		Unclassifiable/Attainment.
Owsley County		Unclassifiable/Attainment.
Pendleton County		Unclassifiable/Attainment.
Perry County		Unclassifiable/Attainment.
Pike County		Unclassifiable/Attainment.
Powell County		Unclassifiable/Attainment.
Pulaski County		Unclassifiable/Attainment.
Robertson County		Unclassifiable/Attainment.
Rockcastle County		Unclassifiable/Attainment.
Rowan County		Unclassifiable/Attainment.
Russell County		Unclassifiable/Attainment.
Scott County		Unclassifiable/Attainment.
Shelby County		Unclassifiable/Attainment.
Simpson County		Unclassifiable/Attainment.
Spencer County		Unclassifiable/Attainment.
Taylor County		Unclassifiable/Attainment.
Todd County		Unclassifiable/Attainment.
Trigg County		Unclassifiable/Attainment.
Trimble County		Unclassifiable/Attainment.
Union County		Unclassifiable/Attainment.
Warren County		Unclassifiable/Attainment.
Washington County		Unclassifiable/Attainment.
Wayne County		Unclassifiable/Attainment.
Webster County		Unclassifiable/Attainment.
Whitley County		Unclassifiable/Attainment.
Wolfe County		Unclassifiable/Attainment.
Woodford County		Unclassifiable/Attainment.

[a] Includes Indian Country located in each county or area, except as otherwise specified.
[1] This date is 90 days after January 5, 2005, unless otherwise noted.

Kentucky—$PM_{2.5}$ [24-hour NAAQS]

Designated area	Designation for the 1997 NAAQS [a]		Designation for the 2006 NAAQS [a]	
	Date [1]	Type	Date [2]	Type
Statewide:				
Adair County		Unclassifiable/Attainment.		Unclassifiable/Attainment.
Allen County		Unclassifiable/Attainment.		Unclassifiable/Attainment.
Anderson County		Unclassifiable/Attainment.		Unclassifiable/Attainment.
Ballard County		Unclassifiable/Attainment.		Unclassifiable/Attainment.
Barren County		Unclassifiable/Attainment.		Unclassifiable/Attainment.
Bath County		Unclassifiable/Attainment.		Unclassifiable/Attainment.
Bell County		Unclassifiable/Attainment.		Unclassifiable/Attainment.
Boone County		Unclassifiable/Attainment.		Unclassifiable/Attainment.
Bourbon County		Unclassifiable/Attainment.		Unclassifiable/Attainment.
Boyd County		Unclassifiable/Attainment.		Unclassifiable/Attainment.
Boyle County		Unclassifiable/Attainment.		Unclassifiable/Attainment.
Bracken County		Unclassifiable/Attainment.		Unclassifiable/Attainment.
Breathitt County		Unclassifiable/Attainment.		Unclassifiable/Attainment.
Breckinridge County		Unclassifiable/Attainment.		Unclassifiable/Attainment.
Bullitt County		Unclassifiable/Attainment.		Unclassifiable/Attainment.

Kentucky—$PM_{2.5}$ [24-hour NAAQS]

Designated area	Designation for the 1997 NAAQS [a]		Designation for the 2006 NAAQS [a]	
	Date [1]	Type	Date [2]	Type
Butler County		Unclassifiable/Attainment.		Unclassifiable/Attainment.
Caldwell County		Unclassifiable/Attainment.		Unclassifiable/Attainment.
Calloway County		Unclassifiable/Attainment.		Unclassifiable/Attainment.
Campbell County		Unclassifiable/Attainment.		Unclassifiable/Attainment.
Carlisle County		Unclassifiable/Attainment.		Unclassifiable/Attainment.
Carroll County		Unclassifiable/Attainment.		Unclassifiable/Attainment.
Carter County		Unclassifiable/Attainment.		Unclassifiable/Attainment.
Casey County		Unclassifiable/Attainment.		Unclassifiable/Attainment.
Christian County		Unclassifiable/Attainment.		Unclassifiable/Attainment.
Clark County		Unclassifiable/Attainment.		Unclassifiable/Attainment.
Clay County		Unclassifiable/Attainment.		Unclassifiable/Attainment.
Clinton County		Unclassifiable/Attainment.		Unclassifiable/Attainment.
Crittenden County		Unclassifiable/Attainment.		Unclassifiable/Attainment.
Cumberland County		Unclassifiable/Attainment.		Unclassifiable/Attainment.
Daviess County		Unclassifiable/Attainment.		Unclassifiable/Attainment.
Edmonson County		Unclassifiable/Attainment.		Unclassifiable/Attainment.
Elliott County		Unclassifiable/Attainment.		Unclassifiable/Attainment.
Estill County		Unclassifiable/Attainment.		Unclassifiable/Attainment.
Fayette County		Unclassifiable/Attainment.		Unclassifiable/Attainment.
Fleming County		Unclassifiable/Attainment.		Unclassifiable/Attainment.
Floyd County		Unclassifiable/Attainment.		Unclassifiable/Attainment.
Franklin County		Unclassifiable/Attainment.		Unclassifiable/Attainment.
Fulton County		Unclassifiable/Attainment.		Unclassifiable/Attainment.
Gallatin County		Unclassifiable/Attainment.		Unclassifiable/Attainment.
Garrard County		Unclassifiable/Attainment.		Unclassifiable/Attainment.
Grant County		Unclassifiable/Attainment.		Unclassifiable/Attainment.
Graves County		Unclassifiable/Attainment.		Unclassifiable/Attainment.
Grayson County		Unclassifiable/Attainment.		Unclassifiable/Attainment.
Green County		Unclassifiable/Attainment.		Unclassifiable/Attainment.
Greenup County		Unclassifiable/Attainment.		Unclassifiable/Attainment.
Hancock County		Unclassifiable/Attainment.		Unclassifiable/Attainment.
Hardin County		Unclassifiable/Attainment.		Unclassifiable/Attainment.
Harlan County		Unclassifiable/Attainment.		Unclassifiable/Attainment.
Harrison County		Unclassifiable/Attainment.		Unclassifiable/Attainment.
Hart County		Unclassifiable/Attainment.		Unclassifiable/Attainment.

Kentucky—$PM_{2.5}$ [24-hour NAAQS]

Designated area	Designation for the 1997 NAAQS [a]		Designation for the 2006 NAAQS [a]	
	Date [1]	Type	Date [2]	Type
Henderson County		Unclassifiable/Attainment.		Unclassifiable/Attainment.
Henry County		Unclassifiable/Attainment.		Unclassifiable/Attainment.
Hickman County		Unclassifiable/Attainment.		Unclassifiable/Attainment.
Hopkins County		Unclassifiable/Attainment.		Unclassifiable/Attainment.
Jackson County		Unclassifiable/Attainment.		Unclassifiable/Attainment.
Jefferson County		Unclassifiable/Attainment.		Unclassifiable/Attainment.
Jessamine County		Unclassifiable/Attainment.		Unclassifiable/Attainment.
Johnson County		Unclassifiable/Attainment.		Unclassifiable/Attainment.
Kenton County		Unclassifiable/Attainment.		Unclassifiable/Attainment.
Knott County		Unclassifiable/Attainment.		Unclassifiable/Attainment.
Knox County		Unclassifiable/Attainment.		Unclassifiable/Attainment.
Larue County		Unclassifiable/Attainment.		Unclassifiable/Attainment.
Laurel County		Unclassifiable/Attainment.		Unclassifiable/Attainment.
Lawrence County		Unclassifiable/Attainment.		Unclassifiable/Attainment.
Lee County		Unclassifiable/Attainment.		Unclassifiable/Attainment.
Leslie County		Unclassifiable/Attainment.		Unclassifiable/Attainment.
Letcher County		Unclassifiable/Attainment.		Unclassifiable/Attainment.
Lewis County		Unclassifiable/Attainment.		Unclassifiable/Attainment.
Lincoln County		Unclassifiable/Attainment.		Unclassifiable/Attainment.
Livingston County		Unclassifiable/Attainment.		Unclassifiable/Attainment.
Logan County		Unclassifiable/Attainment.		Unclassifiable/Attainment.
Lyon County		Unclassifiable/Attainment.		Unclassifiable/Attainment.
McCracken County		Unclassifiable/Attainment.		Unclassifiable/Attainment.
McCreary County		Unclassifiable/Attainment.		Unclassifiable/Attainment.
McLean County		Unclassifiable/Attainment.		Unclassifiable/Attainment.
Madison County		Unclassifiable/Attainment.		Unclassifiable/Attainment.
Magoffin County		Unclassifiable/Attainment.		Unclassifiable/Attainment.
Marion County		Unclassifiable/Attainment.		Unclassifiable/Attainment.
Marshall County		Unclassifiable/Attainment.		Unclassifiable/Attainment.
Martin County		Unclassifiable/Attainment.		Unclassifiable/Attainment.
Mason County		Unclassifiable/Attainment.		Unclassifiable/Attainment.
Meade County		Unclassifiable/Attainment.		Unclassifiable/Attainment.
Menifee County		Unclassifiable/Attainment.		Unclassifiable/Attainment.
Mercer County		Unclassifiable/Attainment.		Unclassifiable/Attainment.
Metcalfe County		Unclassifiable/Attainment.		Unclassifiable/Attainment.

Kentucky—$PM_{2.5}$ [24-hour NAAQS]

Designated area	Designation for the 1997 NAAQS [a]		Designation for the 2006 NAAQS [a]	
	Date [1]	Type	Date [2]	Type
Monroe County		Unclassifiable/Attainment.		Unclassifiable/Attainment.
Montgomery County		Unclassifiable/Attainment.		Unclassifiable/Attainment.
Morgan County		Unclassifiable/Attainment.		Unclassifiable/Attainment.
Muhlenberg County		Unclassifiable/Attainment.		Unclassifiable/Attainment.
Nelson County		Unclassifiable/Attainment.		Unclassifiable/Attainment.
Nicholas County		Unclassifiable/Attainment.		Unclassifiable/Attainment.
Ohio County		Unclassifiable/Attainment.		Unclassifiable/Attainment.
Oldham County		Unclassifiable/Attainment.		Unclassifiable/Attainment.
Owen County		Unclassifiable/Attainment.		Unclassifiable/Attainment.
Owsley County		Unclassifiable/Attainment.		Unclassifiable/Attainment.
Pendleton County		Unclassifiable/Attainment.		Unclassifiable/Attainment.
Perry County		Unclassifiable/Attainment.		Unclassifiable/Attainment.
Pike County		Unclassifiable/Attainment.		Unclassifiable/Attainment.
Powell County		Unclassifiable/Attainment.		Unclassifiable/Attainment.
Pulaski County		Unclassifiable/Attainment.		Unclassifiable/Attainment.
Robertson County		Unclassifiable/Attainment.		Unclassifiable/Attainment.
Rockcastle County		Unclassifiable/Attainment.		Unclassifiable/Attainment.
Rowan County		Unclassifiable/Attainment.		Unclassifiable/Attainment.
Russell County		Unclassifiable/Attainment.		Unclassifiable/Attainment.
Scott County		Unclassifiable/Attainment.		Unclassifiable/Attainment.
Shelby County		Unclassifiable/Attainment.		Unclassifiable/Attainment.
Simpson County		Unclassifiable/Attainment.		Unclassifiable/Attainment.
Spencer County		Unclassifiable/Attainment.		Unclassifiable/Attainment.
Taylor County		Unclassifiable/Attainment.		Unclassifiable/Attainment.
Todd County		Unclassifiable/Attainment.		Unclassifiable/Attainment.
Trigg County		Unclassifiable/Attainment.		Unclassifiable/Attainment.
Trimble County		Unclassifiable/Attainment.		Unclassifiable/Attainment.
Union County		Unclassifiable/Attainment.		Unclassifiable/Attainment.
Warren County		Unclassifiable/Attainment.		Unclassifiable/Attainment.
Washington County		Unclassifiable/Attainment.		Unclassifiable/Attainment.
Wayne County		Unclassifiable/Attainment.		Unclassifiable/Attainment.
Webster County		Unclassifiable/Attainment.		Unclassifiable/Attainment.
Whitley County		Unclassifiable/Attainment.		Unclassifiable/Attainment.
Wolfe County		Unclassifiable/Attainment.		Unclassifiable/Attainment.

Kentucky—$PM_{2.5}$ [24-hour NAAQS]

Designated area	Designation for the 1997 NAAQS [a]		Designation for the 2006 NAAQS [a]	
	Date [1]	Type	Date [2]	Type
Woodford County		Unclassifiable/Attainment.		Unclassifiable/Attainment.

[a] Includes Indian Country located in each county or area, except as otherwise specified.
[1] This date is 90 days after January 5, 2005, unless otherwise noted.
[2] This date is 30 days after November 13, 2009, unless otherwise noted.

Kentucky—2008 Lead NAAQS

Designated area	Designation for the 2008 NAAQS [a]	
	Date [1]	Type
Whole State		Unclassifiable/Attainment.

[a] Includes Indian Country located in each county or area, except as otherwise specified.
[1] December 31, 2011 unless otherwise noted.

[43 FR 8964, Mar. 3, 1978]

EDITORIAL NOTE: For FEDERAL REGISTER citations affecting § 81.318, see the List of CFR Sections Affected, which appears in the Finding Aids section of the printed volume and at *www.fdsys.gov*.

EFFECTIVE DATE NOTES: 1. At 77 FR 30123, May 21, 2012, § 81.318 was amended by revising the table heading for ''Kentucky—Ozone (8-Hour Standard)'' to read ''Kentucky—1997 8-Hour Ozone NAAQS (Primary and Secondary)''; by adding a new table entitled ''Kentucky—2008 8-Hour Ozone NAAQS (Primary and Secondary)'' following the newly designated table ''Kentucky—1997 8-Hour Ozone NAAQS (Primary and Secondary)'', effective July 20, 2012. For the convenience of the user, the added text is set forth as follows:

§ 81.318 Kentucky.

* * * * *

Kentucky—2008 8-Hour Ozone NAAQS (Primary and secondary)

Designated area	Designation		Classification	
	Date [1]	Type	Date [1]	Type
Cincinnati, OH-KY-IN: [2]		Nonattainment		Marginal.
Boone County (part)				
2000 Census tracts: 702, 703.01, 703.04, 703.05, 703.06, 703.07, 703.08, 703.09, 704.01, 704.02, 705.01, 705.02, 706.01, 706.03, 706.04				
Campbell County (part)				
2000 Census tracts: 501, 502, 503, 504, 505, 506, 511.01, 511.02, 512, 513, 519.01, 519.03, 519.04, 520.01, 520.02, 521, 522, 523.01, 523.02, 524, 525, 526, 528, 529, 530, 531				
Kenton County (part)				
2000 Census tracts: 603, 607, 609, 610, 611, 612, 613, 614, 616, 636.03, 636.04, 636.05, 636.06, 638, 640, 641, 642, 643, 644, 645, 646, 647, 648, 649, 650, 651, 652, 653, 654, 655.01, 655.02, 656, 657, 658, 659, 668, 669, 670, 671				
Rest of State: [3]				
Adair County		Unclassifiable/Attainment		
Allen County		Unclassifiable/Attainment		
Anderson County		Unclassifiable/Attainment		
Ballard County		Unclassifiable/Attainment		
Barren County		Unclassifiable/Attainment		
Bath County		Unclassifiable/Attainment		
Bell County		Unclassifiable/Attainment		

Kentucky—2008 8-Hour Ozone NAAQS (Primary and secondary)

Designated area	Designation		Classification	
	Date [1]	Type	Date [1]	Type
Boone County (part)		Unclassifiable/Attainment		
2000 Census tracts: 706.01 and 706.04				
Bourbon County		Unclassifiable/Attainment		
Boyd County		Unclassifiable/Attainment		
Boyle County		Unclassifiable/Attainment		
Bracken County		Unclassifiable/Attainment		
Breathitt County		Unclassifiable/Attainment		
Breckinridge County		Unclassifiable/Attainment		
Bullitt County		Unclassifiable/Attainment O='xl'		
Butler County		Unclassifiable/Attainment		
Caldwell County		Unclassifiable/Attainment		
Calloway County		Unclassifiable/Attainment		
Campbell County (part)		Unclassifiable/Attainment		
2000 Census tracts: 520.01 and 520.02				
Carlisle County		Unclassifiable/Attainment		
Carroll County		Unclassifiable/Attainment		
Carter County		Unclassifiable/Attainment		
Casey County		Unclassifiable/Attainment		
Christian County		Unclassifiable/Attainment		
Clark County		Unclassifiable/Attainment		
Clay County		Unclassifiable/Attainment		
Clinton County		Unclassifiable/Attainment		
Crittenden County		Unclassifiable/Attainment		
Cumberland County		Unclassifiable/Attainment		
Daviess County		Unclassifiable/Attainment		
Edmonson County		Unclassifiable/Attainment		
Elliott County		Unclassifiable/Attainment		
Estill County		Unclassifiable/Attainment		
Fayette County		Unclassifiable/Attainment		
Fleming County		Unclassifiable/Attainment		
Floyd County		Unclassifiable/Attainment		
Franklin County		Unclassifiable/Attainment		
Fulton County		Unclassifiable/Attainment		
Gallatin County		Unclassifiable/Attainment		
Garrard County		Unclassifiable/Attainment		
Grant County		Unclassifiable/Attainment		
Graves County		Unclassifiable/Attainment		
Grayson County		Unclassifiable/Attainment		
Green County		Unclassifiable/Attainment		
Greenup County		Unclassifiable/Attainment		
Hancock County		Unclassifiable/Attainment		
Hardin County		Unclassifiable/Attainment		
Harlan County		Unclassifiable/Attainment		
Harrison County		Unclassifiable/Attainment		
Hart County		Unclassifiable/Attainment		
Henderson County		Unclassifiable/Attainment		
Henry County		Unclassifiable/Attainment		
Hickman County		Unclassifiable/Attainment		
Hopkins County		Unclassifiable/Attainment		
Jackson County		Unclassifiable/Attainment		
Jefferson County		Unclassifiable/Attainment		
Jessamine County		Unclassifiable/Attainment		
Johnson County		Unclassifiable/Attainment		
Kenton County (part)		Unclassifiable/Attainment		
2000 Census tracts: 637.01 and 637.04				
Knott County		Unclassifiable/Attainment		
Knox County		Unclassifiable/Attainment		
Larue County		Unclassifiable/Attainment		
Laurel County		Unclassifiable/Attainment		
Lawrence County		Unclassifiable/Attainment		
Lee County		Unclassifiable/Attainment		
Leslie County		Unclassifiable/Attainment		
Letcher County		Unclassifiable/Attainment		
Lewis County		Unclassifiable/Attainment		
Lincoln County		Unclassifiable/Attainment		
Livingston County		Unclassifiable/Attainment		
Logan County		Unclassifiable/Attainment		

Kentucky—2008 8-Hour Ozone NAAQS (Primary and secondary)

Designated area	Designation		Classification	
	Date [1]	Type	Date [1]	Type
Lyon County		Unclassifiable/Attainment		
McCracken County		Unclassifiable/Attainment		
McCreary County		Unclassifiable/Attainment		
McLean County		Unclassifiable/Attainment		
Madison County		Unclassifiable/Attainment		
Magoffin County		Unclassifiable/Attainment		
Marion County		Unclassifiable/Attainment		
Marshall County		Unclassifiable/Attainment		
Martin County		Unclassifiable/Attainment		
Mason County		Unclassifiable/Attainment		
Meade County		Unclassifiable/Attainment		
Menifee County		Unclassifiable/Attainment		
Mercer County		Unclassifiable/Attainment		
Metcalfe County		Unclassifiable/Attainment		
Monroe County		Unclassifiable/Attainment		
Montgomery County		Unclassifiable/Attainment		
Morgan County		Unclassifiable/Attainment		
Muhlenberg County		Unclassifiable/Attainment		
Nelson County		Unclassifiable/Attainment		
Nicholas County		Unclassifiable/Attainment		
Ohio County		Unclassifiable/Attainment		
Oldham County		Unclassifiable/Attainment		
Owen County		Unclassifiable/Attainment		
Owsley County		Unclassifiable/Attainment		
Pendleton County		Unclassifiable/Attainment		
Perry County		Unclassifiable/Attainment		
Pike County		Unclassifiable/Attainment		
Powell County		Unclassifiable/Attainment		
Pulaski County		Unclassifiable/Attainment		
Robertson County		Unclassifiable/Attainment		
Rockcastle County		Unclassifiable/Attainment		
Rowan County		Unclassifiable/Attainment		
Russell County		Unclassifiable/Attainment		
Scott County		Unclassifiable/Attainment		
Shelby County		Unclassifiable/Attainment		
Simpson County		Unclassifiable/Attainment		
Spencer County		Unclassifiable/Attainment		
Taylor County		Unclassifiable/Attainment		
Todd County		Unclassifiable/Attainment		
Trigg County		Unclassifiable/Attainment		
Trimble County		Unclassifiable/Attainment		
Union County		Unclassifiable/Attainment		
Warren County		Unclassifiable/Attainment		
Washington County		Unclassifiable/Attainment		
Wayne County		Unclassifiable/Attainment		
Webster County		Unclassifiable/Attainment		
Whitley County		Unclassifiable/Attainment		
Wolfe County		Unclassifiable/Attainment		
Woodford County		Unclassifiable/Attainment		

[1] This date is July 20, 2012, unless otherwise noted.
[2] Excludes Indian country located in each area, unless otherwise noted.
[3] Includes any Indian country in each county or area, unless otherwise specified.

* * * * *

2. At 77 FR 34228, June 11, 2012, § 81.318 was amended in the table entitled ''Kentucky—2008 8-Hour Ozone NAAQS (Primary and Secondary)'' by removing the 2000 Census tracts ''706.01'' and ''706.04'' under the entry for ''Boone County (part)'' under the entry for ''Cincinnati, OH-KY-IN''; by removing the 2000 Census tracts ''520.01'' and ''520.02'' under the entry for ''Campbell County (part)'' under the entry for ''Cincinnati, OH-KY-IN''; and by revising 2000 Census tract ''637.04'' to read as ''637.02'' under the entry for ''Kenton County (part)'' under ''Rest of State'', effective July 20, 2012.

§ 81.319 Louisiana.

Louisiana—SO_2

Designated area	Does not meet primary standards	Does not meet secondary standards	Cannot be classified	Better than national standards
AQCR 019	.....	.....	.....	X
AQCR 022	.....	.....	.....	X
AQCR 106	.....	.....	.....	X

Louisiana—Carbon Monoxide

Designated area	Designation		Classification	
	Date [1]	Type	Date [1]	Type
AQCR 019 Monroe-El Dorado Interstate	.....	Unclassifiable/Attainment		
Caldwell Parish				
Catahoula Parish				
Concordia Parish				
East Carroll Parish				
Franklin Parish				
Grant Parish				
La Salle Parish				
Madison Parish				
Morehouse Parish				
Ouachita Parish				
Richland Parish				
Tensas Parish				
Union Parish				
West Carroll Parish				
AQCR 022 Shreveport-Texarkana-Tyler Interstate	.....	Unclassifiable/Attainment		
Avoyelles Parish				
Bienville Parish				
Bossier Parish				
Caddo Parish				
Claiborne Parish				
De Soto Parish				
Jackson Parish				
Lincoln Parish				
Natchitoches Parish				
Rapides Parish				
Red River Parish				
Sabine Parish				
Vernon Parish				
Webster Parish				
Winn Parish				
AQCR 106 Southern Louisiana-Southeast Texas Interstate.	.....	Unclassifiable/Attainment		
Acadia Parish				
Allen Parish				
Ascension Parish				
Assumption Parish				
Beauregard Parish				
Calcasieu Parish				
Cameron Parish				
East Baton Rouge Parish				
East Feliciana Parish				
Evangeline Parish				
Iberia Parish				
Iberville Parish				
Jefferson Davis Parish				
Jefferson Parish				
Lafayette Parish				
Lafourche Parish				
Livingston Parish				
Orleans Parish				
Plaquemines Parish				
Pointe Coupee Parish				
St. Bernard Parish				
St. Charles Parish				
St. Helena Parish				
St. James Parish				
St. John the Baptist Parish				
St. Landry Parish				

Louisiana—Carbon Monoxide

Designated area	Designation		Classification	
	Date [1]	Type	Date [1]	Type
St. Martin Parish				
St. Mary Parish				
St. Tammany Parish				
Tangipahoa Parish				
Terrebonne Parish				
Vermilion Parish				
Washington Parish				
West Baton Route Parish				
West Feliciana Parish				

[1] This date is November 15, 1990, unless otherwise noted.

Louisiana—1978 Lead NAAQS.

Designated area	Designation		Classification	
	Date	Type	Date	Type
East Baton Rouge Parish	1/6/92	Unclassifiable		
Rest of State Not Designated				

Louisiana—Ozone (1-Hour Standard)[2]

Designated area	Designation		Classification	
	Date [1]	Type	Date [1]	Type
Baton Rouge Area:				
Ascension Parish	11/15/90	Nonattainment	6/23/03	Severe.
East Baton Rouge Parish	11/15/90	Nonattainment	6/23/03	Severe.
Iberville Parish	11/15/90	Nonattainment	6/23/03	Severe.
Livingston Parish	11/15/90	Nonattainment	6/23/03	Severe.
West Baton Rouge Parish	11/15/90	Nonattainment	6/23/03	Severe.
Beauregard Parish Area:				
Beauregard Parish	.....	Attainment		
Grant Parish Area:				
Grant Parish	.....	Attainment		
Lafayette Area:				
Lafayette Parish	.....	Attainment		
Lafourche Parish Area:				
Lafourche Parish	2/25/02	Attainment		
Lake Charles Area:				
Calcasieu Parish	.....	Attainment		
New Orleans Area:				
Jefferson Parish	.....	Attainment		
Orleans Parish	.....	Attainment		
St. Bernard Parish	.....	Attainment		
St. Charles Parish	.....	Attainment		
Pointe Coupee Area:				
Pointe Coupee Parish	.....	Attainment		
St. James Parish Area:				
St. James Parish	.....	Attainment		
St. Mary Parish Area:				
St. Mary Parish	.....	Attainment		
.....				
AQCR 019 Monroe-El Dorado Interstate	.....	Unclassifiable/Attainment		
Caldwell Parish				
Catahoula Parish				
Concordia Parish				
East Carroll Parish				
Franklin Parish				
La Salle Parish				
Madison Parish				
Morehouse Parish				
Ouachita Parish				
Richland Parish				
Tensas Parish				
Union Parish				
West Carroll Parish				
AQCR 022 Shreveport-Texarkana-Tyler Interstate	.....	Unclassifiable/Attainment		
Avoyelles Parish				
Bienville Parish				
Bossier Parish				

Louisiana—Ozone (1-Hour Standard)[2]

Designated area	Designation		Classification	
	Date [1]	Type	Date [1]	Type
Caddo Parish				
Claiborne Parish				
De Soto Parish				
Jackson Parish				
Lincoln Parish				
Natchitoches Parish				
Rapides Parish				
Red River Parish				
Sabine Parish				
Vernon Parish				
Webster Parish				
Winn Parish				
AQCR 106 Southern Louisiana-Southeast Texas Interstate.	.....	Unclassifiable/Attainment		
Acadia Parish				
Allen Parish				
Assumption Parish				
Cameron Parish				
East Feliciana Parish				
Evangeline Parish				
Iberia Parish				
Jefferson Davis Parish				
Plaquemines Parish				
St. Helena Parish				
St. John the Baptist Parish				
St. Landry Parish				
St. Martin Parish				
St. Tammany Parish				
Tangipahoa Parish				
Terrebonne Parish				
Vermilion Parish				
Washington Parish				
West Feliciana Parish				

[1] This date is October 18, 2000, unless otherwise noted.
[2] The 1-hour ozone standard is revoked effective June 15, 2005 for all areas in Louisiana. The Lafayette, Lake Charles, New Orleans, Pointe Coupee Parish, Beauregard Par, Grant Par, LaFourche Par, St James Par, and St Mary Par areas are maintenance areas for the 1-hour NAAQS for purposes of 40 CFR part 51 subpart X.

Louisiana—NO_2 (1971 Annual Standard)

Designated area	Does not meet primary standards	Cannot be classified or better than national standards
AQCR 019	.....	X
AQCR 022	.....	X
AQCR 106	.....	X

Louisiana—NO_2 (2010 1-Hour Standard)

Designated area	Designation [a]	
	Date [1]	Type
Acadia Parish	.....	Unclassifiable/Attainment.
Allen Parish	.....	Unclassifiable/Attainment.
Ascension Parish	.....	Unclassifiable/Attainment.
Assumption Parish	.....	Unclassifiable/Attainment.
Avoyelles Parish	.....	Unclassifiable/Attainment.
Beauregard Parish	.....	Unclassifiable/Attainment.
Bienville Parish	.....	Unclassifiable/Attainment.
Bossier Parish	.....	Unclassifiable/Attainment.
Caddo Parish	.....	Unclassifiable/Attainment.
Calcasieu Parish	.....	Unclassifiable/Attainment.
Caldwell Parish	.....	Unclassifiable/Attainment.
Cameron Parish	.....	Unclassifiable/Attainment.
Catahoula Parish	.....	Unclassifiable/Attainment.
Claiborne Parish	.....	Unclassifiable/Attainment.
Concordia Parish	.....	Unclassifiable/Attainment.
De Soto Parish	.....	Unclassifiable/Attainment.
East Baton Rouge Parish	.....	Unclassifiable/Attainment.

Louisiana—NO_2 (2010 1-Hour Standard)

Designated area	Designation [a]	
	Date [1]	Type
East Carroll Parish		Unclassifiable/Attainment.
East Feliciana Parish		Unclassifiable/Attainment.
Evangeline Parish		Unclassifiable/Attainment.
Franklin Parish		Unclassifiable/Attainment.
Grant Parish		Unclassifiable/Attainment.
Iberia Parish		Unclassifiable/Attainment.
Iberville Parish		Unclassifiable/Attainment.
Jackson Parish		Unclassifiable/Attainment.
Jefferson Davis Parish		Unclassifiable/Attainment.
Jefferson Parish		Unclassifiable/Attainment.
La Salle Parish		Unclassifiable/Attainment.
Lafayette Parish		Unclassifiable/Attainment.
Lafourche Parish		Unclassifiable/Attainment.
Lincoln Parish		Unclassifiable/Attainment.
Livingston Parish		Unclassifiable/Attainment.
Madison Parish		Unclassifiable/Attainment.
Morehouse Parish		Unclassifiable/Attainment.
Natchitoches Parish		Unclassifiable/Attainment.
Orleans Parish		Unclassifiable/Attainment.
Ouachita Parish		Unclassifiable/Attainment.
Plaquemines Parish		Unclassifiable/Attainment.
Pointe Coupee Parish		Unclassifiable/Attainment.
Rapides Parish		Unclassifiable/Attainment.
Red River Parish		Unclassifiable/Attainment.
Richland Parish		Unclassifiable/Attainment.
Sabine Parish		Unclassifiable/Attainment.
St. Bernard Parish		Unclassifiable/Attainment.
St. Charles Parish		Unclassifiable/Attainment.
St. Helena Parish		Unclassifiable/Attainment.
St. James Parish		Unclassifiable/Attainment.
St. John the Baptist Parish		Unclassifiable/Attainment.
St. Landry Parish		Unclassifiable/Attainment.
St. Martin Parish		Unclassifiable/Attainment.
St. Tammany Parish		Unclassifiable/Attainment.
Tangipahoa Parish		Unclassifiable/Attainment.
Terrebonne Parish		Unclassifiable/Attainment.
Tensas Parish		Unclassifiable/Attainment.
Vermilion Parish		Unclassifiable/Attainment.
Vernon Parish		Unclassifiable/Attainment.
Union Parish		Unclassifiable/Attainment.
Washington Parish		Unclassifiable/Attainment.
Webster Parish		Unclassifiable/Attainment.
West Baton Rouge Parish		Unclassifiable/Attainment.
West Carroll Parish		Unclassifiable/Attainment.
West Feliciana Parish		Unclassifiable/Attainment.
Winn Parish		Unclassifiable/Attainment

[a] Includes Indian Country located in each county or area, except as otherwise specified.
[1] This date is 90 days after October 31, 2011, unless otherwise noted.

Louisiana—PM–10

Designated area	Designation		Classification	
	Date	Type	Date	Type
AQCR 019	11/15/90	Unclassifiable		
AQCR 022	11/15/90	Unclassifiable		
AQCR 106	11/15/90	Unclassifiable		

Louisiana—Ozone (8-Hour Standard)

Designated area	Designation [a]		Category/classification	
	Date [1]	Type	Date [1]	Type
Baton Rouge Area:				
Ascension Parish	([2])	Attainment.		
East Baton Rouge Parish	([2])	Attainment.		
Iberville Parish	([2])	Attainment.		
Livingston Parish	([2])	Attainment.		
West Baton Rouge Parish	([2])	Attainment		
Beauregard Parish Area, LA:				

Louisiana—Ozone (8-Hour Standard)

Designated area	Designation [a]		Category/classification	
	Date [1]	Type	Date [1]	Type
Beauregard Parish	.....	Unclassifiable/Attainment		
Grant Parish Area:				
Grant Parish	.....	Unclassifiable/Attainment		
Lafayette Area:				
Lafayette Parish	.....	Unclassifiable/Attainment		
Lafourche Parish Area:				
Lafourche Parish	.....	Unclassifiable/Attainment		
Lake Charles Area:				
Calcasieu Parish	.....	Unclassifiable/Attainment		
New Orleans Area:				
Jefferson Parish	.....	Unclassifiable/Attainment		
Orleans Parish	.....	Unclassifiable/Attainment		
St. Bernard Parish	.....	Unclassifiable/Attainment		
St. Charles Parish	.....	Unclassifiable/Attainment		
Pointe Coupee Area:				
Pointe Coupee Parish	.....	Unclassifiable/Attainment		
St. James Parish Area:				
St. James Parish	.....	Unclassifiable/Attainment		
St. Mary Parish Area:				
St. Mary Parish	.....	Unclassifiable/Attainment		
AQCR 019 Monroe-El Dorado Interstate	.....	Unclassifiable/Attainment		
Caldwell Parish				
Catahoula Parish				
Concordia Parish				
East Carroll Parish				
Franklin Parish				
La Salle Parish				
Madison Parish				
Morehouse Parish				
Ouachita Parish				
Richland Parish				
Tensas Parish				
Union Parish				
West Carroll Parish				
AQCR 022 Shreveport-Texarkana-Tyler Interstate.	.....	Unclassifiable/Attainment		
Bienville Parish				
Bossier Parish				
Caddo Parish				
Claiborne Parish				
De Soto Parish				
Jackson Parish				
Lincoln Parish				
Natchitoches Parish				
Red River Parish				
Sabine Parish				
Webster Parish				
Winn Parish				
AQCR 106 S. Louisiana-S.E. Texas Interstate:				
St. John the Baptist Parish	.....	Unclassifiable/Attainment		
AQCR 106 S. Louisiana-S.E. Texas Interstate	.....	Unclassifiable/Attainment		
Acadia Parish				
Allen Parish				
Assumption Parish				
Avoyelles Parish				
Cameron Parish				
East Feliciana Parish				
Evangeline Parish				
Iberia Parish				
Jefferson Davis Parish				
Plaquemines Parish				
Rapides Parish				
St. Helena Parish				
St. Landry Parish				
St. Martin Parish				
St. Tammany Parish				
Tangipahoa Parish				
Terrebonne Parish				
Vermilion Parish				
Vernon Parish				
Washington Parish				

Louisiana—Ozone (8-Hour Standard)

Designated area	Designation [a]		Category/classification	
	Date [1]	Type	Date [1]	Type
West Feliciana Parish				

[a] Includes Indian Country located in each county or area, except as otherwise specified.
[1] This date is June 15, 2004, unless otherwise noted.
[2] Effective December 30, 2011.

Louisiana—$PM_{2.5}$ (Annual NAAQS)

Designated area	Designation [a]	
	Date [1]	Type
AQCR 019 Monroe-El Dorado Interstate:		
Caldwell Parish		Unclassifiable/Attainment.
Catahoula Parish		Unclassifiable/Attainment.
Concordia Parish		Unclassifiable/Attainment.
East Carroll Parish		Unclassifiable/Attainment.
Franklin Parish		Unclassifiable/Attainment.
La Salle Parish		Unclassifiable/Attainment.
Madison Parish		Unclassifiable/Attainment.
Morehouse Parish		Unclassifiable/Attainment.
Ouachita Parish		Unclassifiable/Attainment.
Richland Parish		Unclassifiable/Attainment.
Tensas Parish		Unclassifiable/Attainment.
Union Parish		Unclassifiable/Attainment.
West Carroll Parish		Unclassifiable/Attainment.
AQCR 022 Shreveport-Texarkana-Tyler Interstate:		
Bienville Parish		Unclassifiable/Attainment.
Bossier Parish		Unclassifiable/Attainment.
Caddo Parish		Unclassifiable/Attainment.
Claiborne Parish		Unclassifiable/Attainment.
De Soto Parish		Unclassifiable/Attainment.
Jackson Parish		Unclassifiable/Attainment.
Lincoln Parish		Unclassifiable/Attainment.
Natchitoches Parish		Unclassifiable/Attainment.
Red River Parish		Unclassifiable/Attainment.
Sabine Parish		Unclassifiable/Attainment.
Webster Parish		Unclassifiable/Attainment.
Winn Parish		Unclassifiable/Attainment.
AQCR 106 S. Louisiana-S.E. Texas Interstate:		
Acadia Parish		Unclassifiable/Attainment.
Allen Parish		Unclassifiable/Attainment.
Ascension Parish		Unclassifiable/Attainment.
Assumption Parish		Unclassifiable/Attainment.
Avoyelles Parish		Unclassifiable/Attainment.
Beauregard Parish		Unclassifiable/Attainment.
Calcasieu Parish		Unclassifiable/Attainment.
Cameron Parish		Unclassifiable/Attainment.
East Baton Rouge Parish		Unclassifiable/Attainment.
East Feliciana Parish		Unclassifiable/Attainment.
Evangeline Parish		Unclassifiable/Attainment.
Grant Parish		Unclassifiable/Attainment.
Iberia Parish		Unclassifiable/Attainment.
Iberville Parish		Unclassifiable/Attainment.
Jefferson Davis Parish		Unclassifiable/Attainment.
Jefferson Parish		Unclassifiable/Attainment.
Lafayette Parish		Unclassifiable/Attainment.
Lafourche Parish		Unclassifiable/Attainment.
Livingston Parish		Unclassifiable/Attainment.
Orleans Parish		Unclassifiable/Attainment.
Plaquemines Parish		Unclassifiable/Attainment.
Pointe Coupee Parish		Unclassifiable/Attainment.
Rapides Parish		Unclassifiable/Attainment.
St. Bernard Parish		Unclassifiable/Attainment.
St. Charles Parish		Unclassifiable/Attainment.
St. Helena Parish		Unclassifiable/Attainment.
St. James Parish		Unclassifiable/Attainment.
St. John the Baptist Parish		Unclassifiable/Attainment.
St. Landry Parish		Unclassifiable/Attainment.
St. Martin Parish		Unclassifiable/Attainment.
St. Tammany Parish		Unclassifiable/Attainment.
Tangipahoa Parish		Unclassifiable/Attainment.

Louisiana—$PM_{2.5}$ (Annual NAAQS)

Designated area	Designation [a]	
	Date [1]	Type
Terrebonne Parish		Unclassifiable/Attainment.
Vermilion Parish		Unclassifiable/Attainment.
Vernon Parish		Unclassifiable/Attainment.
Washington Parish		Unclassifiable/Attainment.
West Baton Rouge Parish		Unclassifiable/Attainment.
West Feliciana Parish		Unclassifiable/Attainment.

[a] Includes Indian Country located in each county or area, except as otherwise specified.
[1] This date is 90 days after January 5, 2005, unless otherwise noted.

Louisiana—$PM_{2.5}$ [24-hour NAAQS]

Designated area	Designation for the 1997 NAAQS [a]		Designation for the 2006 NAAQS [a]	
	Date [1]	Type	Date [2]	Type
AQCR 019 Monroe-El Dorado Interstate:				
Caldwell Parish		Unclassifiable/Attainment.		Unclassifiable/Attainment.
Catahoula Parish		Unclassifiable/Attainment.		Unclassifiable/Attainment.
Concordia Parish		Unclassifiable/Attainment.		Unclassifiable/Attainment.
East Carroll Parish		Unclassifiable/Attainment.		Unclassifiable/Attainment.
Franklin Parish		Unclassifiable/Attainment.		Unclassifiable/Attainment.
La Salle Parish		Unclassifiable/Attainment.		Unclassifiable/Attainment.
Madison Parish		Unclassifiable/Attainment.		Unclassifiable/Attainment.
Morehouse Parish		Unclassifiable/Attainment.		Unclassifiable/Attainment.
Ouachita Parish		Unclassifiable/Attainment.		Unclassifiable/Attainment.
Richland Parish		Unclassifiable/Attainment.		Unclassifiable/Attainment.
Tensas Parish		Unclassifiable/Attainment.		Unclassifiable/Attainment.
Union Parish		Unclassifiable/Attainment.		Unclassifiable/Attainment.
West Carroll Parish		Unclassifiable/Attainment.		Unclassifiable/Attainment.
AQCR 022 Shreveport-Texarkana-Tyler Interstate:				
Bienville Parish		Unclassifiable/Attainment.		Unclassifiable/Attainment.
Bossier Parish		Unclassifiable/Attainment.		Unclassifiable/Attainment.
Caddo Parish		Unclassifiable/Attainment.		Unclassifiable/Attainment.
Claiborne Parish		Unclassifiable/Attainment.		Unclassifiable/Attainment.
De Soto Parish		Unclassifiable/Attainment.		Unclassifiable/Attainment.
Jackson Parish		Unclassifiable/Attainment.		Unclassifiable/Attainment.
Lincoln Parish		Unclassifiable/Attainment.		Unclassifiable/Attainment.
Natchitoches Parish		Unclassifiable/Attainment.		Unclassifiable/Attainment.
Red River Parish		Unclassifiable/Attainment.		Unclassifiable/Attainment.
Sabine Parish		Unclassifiable/Attainment.		Unclassifiable/Attainment.
Webster Parish		Unclassifiable/Attainment.		Unclassifiable/Attainment.
Winn Parish		Unclassifiable/Attainment.		Unclassifiable/Attainment.
AQCR 106 S. Louisiana-S.E. Texas Interstate:				

Louisiana—$PM_{2.5}$ [24-hour NAAQS]

Designated area	Designation for the 1997 NAAQS [a]		Designation for the 2006 NAAQS [a]	
	Date [1]	Type	Date [2]	Type
Acadia Parish		Unclassifiable/Attainment.		Unclassifiable/Attainment.
Allen Parish		Unclassifiable/Attainment.		Unclassifiable/Attainment.
Ascension Parish		Unclassifiable/Attainment.		Unclassifiable/Attainment.
Assumption Parish		Unclassifiable/Attainment.		Unclassifiable/Attainment.
Avoyelles Parish		Unclassifiable/Attainment.		Unclassifiable/Attainment.
Beauregard Parish		Unclassifiable/Attainment.		Unclassifiable/Attainment.
Calcasieu Parish		Unclassifiable/Attainment.		Unclassifiable/Attainment.
Cameron Parish		Unclassifiable/Attainment.		Unclassifiable/Attainment.
East Baton Rouge Parish		Unclassifiable/Attainment.		Unclassifiable/Attainment.
East Feliciana Parish		Unclassifiable/Attainment.		Unclassifiable/Attainment.
Evangeline Parish		Unclassifiable/Attainment.		Unclassifiable/Attainment.
Grant Parish		Unclassifiable/Attainment.		Unclassifiable/Attainment.
Iberia Parish		Unclassifiable/Attainment.		Unclassifiable/Attainment.
Iberville Parish		Unclassifiable/Attainment.		Unclassifiable/Attainment.
Jefferson Davis Parish		Unclassifiable/Attainment.		Unclassifiable/Attainment.
Jefferson Parish		Unclassifiable/Attainment.		Unclassifiable/Attainment.
Lafayette Parish		Unclassifiable/Attainment.		Unclassifiable/Attainment.
Lafourche Parish		Unclassifiable/Attainment.		Unclassifiable/Attainment.
Livingston Parish		Unclassifiable/Attainment.		Unclassifiable/Attainment.
Orleans Parish		Unclassifiable/Attainment.		Unclassifiable/Attainment.
Plaquemines Parish		Unclassifiable/Attainment.		Unclassifiable/Attainment.
Pointe Coupee Parish		Unclassifiable/Attainment.		Unclassifiable/Attainment.
Rapides Parish		Unclassifiable/Attainment.		Unclassifiable/Attainment.
St. Bernard Parish		Unclassifiable/Attainment.		Unclassifiable/Attainment.
St. Charles Parish		Unclassifiable/Attainment.		Unclassifiable/Attainment.
St. Helena Parish		Unclassifiable/Attainment.		Unclassifiable/Attainment.
St. James Parish		Unclassifiable/Attainment.		Unclassifiable/Attainment.
St. John the Baptist Parish		Unclassifiable/Attainment.		Unclassifiable/Attainment.
St. Landry Parish		Unclassifiable/Attainment.		Unclassifiable/Attainment.
St. Martin Parish		Unclassifiable/Attainment.		Unclassifiable/Attainment.
St. Tammany Parish		Unclassifiable/Attainment.		Unclassifiable/Attainment.
Tangipahoa Parish		Unclassifiable/Attainment.		Unclassifiable/Attainment.
Terrebonne Parish		Unclassifiable/Attainment.		Unclassifiable/Attainment.
Vermilion Parish		Unclassifiable/Attainment.		Unclassifiable/Attainment.
Vernon Parish		Unclassifiable/Attainment.		Unclassifiable/Attainment.

Louisiana—$PM_{2.5}$ [24-hour NAAQS]

Designated area	Designation for the 1997 NAAQS [a]		Designation for the 2006 NAAQS [a]	
	Date [1]	Type	Date [2]	Type
Washington Parish		Unclassifiable/Attainment.		Unclassifiable/Attainment.
West Baton Rouge Parish		Unclassifiable/Attainment.		Unclassifiable/Attainment.
West Feliciana Parish		Unclassifiable/Attainment.		Unclassifiable/Attainment.

[a] Includes Indian Country located in each county or area, except as otherwise specified.
[1] This date is 90 days after January 5, 2005, unless otherwise noted.
[2] This date is 30 days after November 13, 2009, unless otherwise noted.

Louisiana—2008 Lead NAAQS

Designated area	Designation for the 2008 NAAQS [a]	
	Date [1]	Type
Whole State		Unclassifiable/Attainment.

[a] Includes Indian Country located in each county or area, except as otherwise specified.
[1] December 31, 2011 unless otherwise noted.

[43 FR 8964, Mar. 3, 1978]

EDITORIAL NOTE: For FEDERAL REGISTER citations affecting §81.319 see the List of CFR Sections Affected, which appears in the Finding Aids section of the printed volume and at *www.fdsys.gov*.

EFFECTIVE DATE NOTE: At 77 FR 30125, May 21, 2012, §81.319 was amended by revising the table heading for ''Louisiana—Ozone (8-Hour Standard)'' to read ''Louisiana—1997 8-Hour Ozone NAAQS (Primary and Secondary)''; by adding a new table entitled ''Louisiana—2008 8-Hour Ozone NAAQS (Primary and Secondary)'' following the newly designated table ''Louisiana—1997 8-Hour Ozone NAAQS (Primary and Secondary)'' effective July 20, 2012. For the convenience of the user, the added text is set forth as follows:

§81.319 Louisiana.

* * * * *

Louisiana—2008 8-Hour Ozone NAAQS (Primary and secondary)

Designated area	Designation		Classification	
	Date [1]	Type	Date [1]	Type
Baton Rouge, LA: [2]		Nonattainment		Marginal.
Ascension Parish				
East Baton Rouge Parish				
Iberville Parish				
Livingston Parish				
West Baton Rouge Parish				
AQCR 019 Monroe-El Dorado Interstate: [3]				
Caldwell Parish		Unclassifiable/Attainment		
Catahoula Parish		Unclassifiable/Attainment		
Concordia Parish		Unclassifiable/Attainment		
East Carroll Parish		Unclassifiable/Attainment		
Franklin Parish		Unclassifiable/Attainment		
La Salle Parish		Unclassifiable/Attainment		
Madison Parish		Unclassifiable/Attainment		
Morehouse Parish		Unclassifiable/Attainment		
Ouachita Parish		Unclassifiable/Attainment		
Richland Parish		Unclassifiable/Attainment		
Tensas Parish		Unclassifiable/Attainment		
Union Parish		Unclassifiable/Attainment		
West Carroll Parish		Unclassifiable/Attainment		
AQCR 022 Shreveport-Texarkana-Tyler Interstate: [3]				
Bienville Parish		Unclassifiable/Attainment		
Bossier Parish		Unclassifiable/Attainment		
Caddo Parish		Unclassifiable/Attainment		
Claiborne Parish		Unclassifiable/Attainment		
De Soto Parish		Unclassifiable/Attainment		
Jackson Parish		Unclassifiable/Attainment		

Louisiana—2008 8-Hour Ozone NAAQS (Primary and secondary)

Designated area	Designation		Classification	
	Date [1]	Type	Date [1]	Type
Lincoln Parish		Unclassifiable/Attainment		
Natchitoches Parish		Unclassifiable/Attainment		
Red River Parish		Unclassifiable/Attainment		
Sabine Parish		Unclassifiable/Attainment		
Webster Parish		Unclassifiable/Attainment		
Winn Parish		Unclassifiable/Attainment		
AQCR 106 S. Louisiana-SE. Texas Interstate: (remainder) [3]				
Acadia Parish		Unclassifiable/Attainment		
Allen Parish		Unclassifiable/Attainment		
Assumption Parish		Unclassifiable/Attainment		
Avoyelles Parish		Unclassifiable/Attainment		
Beauregard Parish		Unclassifiable/Attainment		
Calcasieu Parish		Unclassifiable/Attainment		
Cameron Parish		Unclassifiable/Attainment		
East Feliciana Parish		Unclassifiable/Attainment		
Evangeline Parish		Unclassifiable/Attainment		
Grant Parish		Unclassifiable/Attainment		
Iberia Parish		Unclassifiable/Attainment		
Jefferson Davis Parish		Unclassifiable/Attainment		
Jefferson Parish		Unclassifiable/Attainment		
Lafayette Parish		Unclassifiable/Attainment		
Lafourche Parish		Unclassifiable/Attainment		
Orleans Parish		Unclassifiable/Attainment		
Plaquemines Parish		Unclassifiable/Attainment		
Pointe Coupee Parish		Unclassifiable/Attainment		
Rapides Parish		Unclassifiable/Attainment		
St. Bernard Parish		Unclassifiable/Attainment		
St. Charles Parish		Unclassifiable/Attainment		
St. Helena Parish		Unclassifiable/Attainment		
St. James Parish		Unclassifiable/Attainment		
St. John the Baptist Parish		Unclassifiable/Attainment		
St. Landry Parish		Unclassifiable/Attainment		
St. Martin Parish		Unclassifiable/Attainment		
St. Mary Parish		Unclassifiable/Attainment		
St. Tammany Parish		Unclassifiable/Attainment		
Tangipahoa Parish		Unclassifiable/Attainment		
Terrebonne Parish		Unclassifiable/Attainment		
Vermilion Parish		Unclassifiable/Attainment		
Vernon Parish		Unclassifiable/Attainment		
Washington Parish		Unclassifiable/Attainment		
West Feliciana Parish		Unclassifiable/Attainment		

[1] This date is July 20, 2012, unless otherwise noted.
[2] Excludes Indian country located in each area, unless otherwise noted.
[3] Includes any Indian country in each county or area, unless otherwise specified.

* * * * *

§ 81.320 Maine.

Maine—TSP

Designated areas	Does not meet primary standards	Does not meet secondary standards	Cannot be classified	Better than national standards
AQCR 107 (Central ME):				
Augusta			X	
Lewiston/Auburn			X	
Rockland			X	
Remainder of AQCR				X
AQCR 109 (Downeast):				
Lincoln			X	
Bangor/Brewer			X	
Baileyville			X	
Remainder of AQCR				X
AQCR 108 (Aroostook)			X	
AQCR 111 (Northwest ME)				X
AQCR 110 (Met. Portland)				X

Maine—SO_2

Designated area	Does not meet primary standards	Does not meet secondary standards	Cannot be classified	Better than national standard
AQCR 110				X
AQCR 107				X
AQCR 109				X
AQCR 108-Madawaska			X	
Rest of region				X
AQCR 111				X

Maine—Carbon Monoxide

Designated area	Designation		Classification	
	Date [1]	Type	Date [1]	Type
Statewide		Unclassifiable/ Attainment		
Androscoggin County				
Aroostook County				
Cumberland County				
Franklin County				
Hancock County				
Kennebec County				
Knox County				
Lincoln County				
Oxford County				
Penobscot County				
Piscataquis County				
Sagadahoc County				
Somerset County				
Waldo County				
Washington County				
York County				

[1] This date is November 15, 1990, unless otherwise noted.

Maine—Ozone (1-Hour Standard)[4]

Designated area	Designation		Classification	
	Date [1]	Type	Date [1]	Type
Franklin County Area:				
Franklin County (part)		Unclassifiable/Attainment		
Hancock County and Waldo County Area:				
Hancock County		Attainment		
Waldo County		Attainment		
Knox County and Lincoln County Area:				
Knox County	(3)	Nonattainment	(3)	Moderate.
Lincoln County	(3)	Nonattainment	(3)	Moderate.
Lewiston-Auburn Area:				
Androscoggin County	(3)	Nonattainment	(3)	Moderate.
Kennebec County	(3)	Nonattainment	(3)	Moderate.
Oxford County Area:				
Oxford County (part)		Unclassifiable/Attainment		
Portland Area:				
Cumberland County	(3)	Nonattainment	(3)	Moderate.[2]
Sagadahoc County	(3)	Nonattainment	(3)	Moderate.[2]
York County	(3)	Nonattainment	(3)	Moderate.[2]
Somerset County Area:				
Somerset County (part)		Unclassifiable/Attainment		
AQCR 108 Aroostook Intrastate		Unclassifiable/Attainment		
Aroostook County (part) see 40 CFR 81.179.				
AQCR 109 Down East Intrastate		Unclassifiable/Attainment		
Penobscot County (part), as described under 40 CFR 81.181				
Piscataquis County (part) see 40 CFR 81.181				
Washington County				
AQCR 111 Northwest Maine Intrastate (Remainder of).		Unclassifiable/Attainment		
see 40 CFR 81.182				
Aroostook County				
Franklin County (part)				

Maine—Ozone (1-Hour Standard)[4]

Designated area	Designation		Classification	
	Date [1]	Type	Date [1]	Type
Oxford County (part) Penobscot County (part) Piscataquis County (part) Somerset County (part)				

[1] This date is October 18, 2000, unless otherwise noted.
[2] Attainment date extended to November 15, 1997.
[3] This date is January 16, 2001.
[4] The 1-hour ozone standard is revoked effective June 15, 2005 for all areas in Maine. Hancock and Waldo Counties are maintenance areas for the 1-hour NAAQS for purposes of 40 CFR part 51 subpart X.

Maine—PM–10

Designated area	Designation		Classification	
	Date	Type	Date	Type
Aroostook County:.				
City of Presque Isle (part) [1]	8/30/95	Attainment		
That area bounded by Allen Street from its intersection with Main Street east to Dudley Street, Dudley Street south to Cedar Street, Cedar Street west to Main Street, Main Street south to Kennedy Brook, Kennedy Brook northwest crossing Presque Isle Stream to Coburn Street, Coburn Street northwest to Mechanic Street, Mechanic Street west to Judd Street, Judd Street northeast to State Street, State Street northwest to School Street, School Street northeast to Park Street, Park Street east to Main Street				
Rest of State	11/15/90	Unclassifiable		

[1] This definition of the nonattainment area redefines its borders from the entire City of Presque Isle to this area of 0.6 square miles which circumscribe the area of high emission densities and ambient PM10 levels. (60 FR 2885, January 12, 1995)

Maine—NO_2 (1971 Annual Standard)

Designated area	Does not meet primary standards	Cannot be classified or better than national standards
AQCR 110		X
AQCR 107		X
AQCR 109		X
AQCR 108		X
AQCR 111		X

Maine—NO_2 (2010 1-Hour Standard)

Designated area	Designation [a]	
	Date [1]	Type
State of Maine		Unclassifiable/Attainment.

[a] Includes Indian Country located in each county or area, except as otherwise specified.
[1] This date is 90 days after October 31, 2011, unless otherwise noted.

Maine—Ozone (8-Hour Standard)

Designated area	Designation [a]		Category/classification	
	Date [1]	Type	Date [1]	Type
Hancock, Knox, Lincoln and Waldo Cos., ME:				

Maine—Ozone (8-Hour Standard)

Designated area	Designation [a]		Category/classification	
	Date [1]	Type	Date [1]	Type
Hancock County (part) (includes only the following cities and towns): Bar Harbor, Blue Hill, Brooklin, Brooksville, Cranberry Isle, Deer Isle, Frenchboro, Gouldsboro, Hancock, Lamoine, Mount Desert, Sedgwick, Sorrento, Southwest Harbor, Stonington, Sullivan, Surry, Swans Island, Tremont, Trenton, and Winter Harbor.	January 10, 2007	Attainment		
Knox County (part) (includes only the following cities and towns): Camden, Criehaven, Cushing, Friendship, Isle au Haut, Matinicus Isle, Muscle Ridge Shoals, North Haven, Owls Head, Rockland, Rockport, St. George, South Thomaston, Thomaston, Vinalhaven, and Warren.	January 10, 2007	Attainment		
Lincoln County (part) (includes only the following cities and towns): Alna, Boothbay, Boothbay Harbor, Breman, Bristol, Damariscotta, Dresden, Edgecomb, Monhegan, Newcastle, Nobleboro, South Bristol, Southport, Waldoboro, Westport, and Wiscasset.	January 10, 2007	Attainment		
Waldo County (part) (includes only the following town): Islesboro.	January 10, 2007	Attainment		
Portland, ME:				
Androscoggin County (part) (includes only the following town): Durham.	January 10, 2007	Attainment		
Cumberland County (part) (includes only the following cities and towns): Brunswick, Cape Elizabeth, Casco, Cumberland, Falmouth, Freeport, Frye Island, Gorham, Gray, Harpswell, Long Island, New Gloucester, North Yarmouth, Portland, Pownal, Raymond, Scarborough, South Portland, Standish, Westbrook, Windham, and Yarmouth.	January 10, 2007	Attainment		
Sagadahoc County (includes all cities & towns).	January 10, 2007	Attainment		
York County (part) (includes only the following cities and towns): Alfred, Arundel, Berwick, Biddeford, Buxton, Dayton, Elliot, Hollis, Kennebunk, Kennebunkport, Kittery, Limington, Lyman, North Berwick, Ogunquit, Old Orchard Beach, Saco, Sanford, South Berwick, Wells, and York.	January 10, 2007	Attainment		
Rest of State	.....	Unclassifiable Attainment		
Androscoggin County (part) remainder				
Aroostook County				
Cumberland County (part) remainder				
Franklin County				
Hancock County (part) remainder				
Kennebec County				
Knox County (part) remainder				
Lincoln County (part) remainder				
Oxford County				
Penobscot County				
Piscataquis County				
Somerset County				
Waldo County (part) remainder				
Washington County				
York County (part) remainder				

[a] Includes Indian Country located in each county or area, except as otherwise specified.
[1] This date is June 15, 2004, unless otherwise noted.

Maine—$PM_{2.5}$ (Annual NAAQS)

Designated area	Designation [a]	
	Date [1]	Type
Statewide:		
Androscoggin County		Unclassifiable/Attainment.
Aroostook County		Unclassifiable/Attainment.
Cumberland County		Unclassifiable/Attainment.
Franklin County		Unclassifiable/Attainment.
Hancock County		Unclassifiable/Attainment.
Kennebec County		Unclassifiable/Attainment.
Knox County		Unclassifiable/Attainment.
Lincoln County		Unclassifiable/Attainment.
Oxford County		Unclassifiable/Attainment.
Penobscot County		Unclassifiable/Attainment.
Piscataquis County		Unclassifiable/Attainment.
Sagadahoc County		Unclassifiable/Attainment.
Somerset County		Unclassifiable/Attainment.
Waldo County		Unclassifiable/Attainment.
Washington County		Unclassifiable/Attainment.
York County		Unclassifiable/Attainment.

[a] Includes Indian Country located in each county or area, except as otherwise specified.
[1] This date is 90 days after January 5, 2005, unless otherwise noted.

Maine—$PM_{2.5}$ [24-hour NAAQS]

Designated area	Designation for the 1997 NAAQS [a]		Designation for the 2006 NAAQS [a]	
	Date [1]	Type	Date [2]	Type
Statewide:				
Androscoggin County		Unclassifiable/Attainment.		Unclassifiable/Attainment.
Aroostook County		Unclassifiable/Attainment.		Unclassifiable/Attainment.
Cumberland County		Unclassifiable/Attainment.		Unclassifiable/Attainment.
Franklin County		Unclassifiable/Attainment.		Unclassifiable/Attainment.
Hancock County		Unclassifiable/Attainment.		Unclassifiable/Attainment.
Kennebec County		Unclassifiable/Attainment.		Unclassifiable/Attainment.
Knox County		Unclassifiable/Attainment.		Unclassifiable/Attainment.
Lincoln County		Unclassifiable/Attainment.		Unclassifiable/Attainment.
Oxford County		Unclassifiable/Attainment.		Unclassifiable/Attainment.
Penobscot County		Unclassifiable/Attainment.		Unclassifiable/Attainment.
Piscataquis County		Unclassifiable/Attainment.		Unclassifiable/Attainment.
Sagadahoc County		Unclassifiable/Attainment.		Unclassifiable/Attainment.
Somerset County		Unclassifiable/Attainment.		Unclassifiable/Attainment.
Waldo County		Unclassifiable/Attainment.		Unclassifiable/Attainment.
Washington County		Unclassifiable/Attainment.		Unclassifiable/Attainment.
York County		Unclassifiable/Attainment.		Unclassifiable/Attainment.

[a] Includes Indian Country located in each county or area, except as otherwise specified.
[1] This date is 90 days after January 5, 2005, unless otherwise noted.
[2] This date is 30 days after November 13, 2009, unless otherwise noted.

Maine—2008 Lead NAAQS

Designated area	Designation for the 2008 NAAQS [a]	
	Date [1]	Type
Whole State		Unclassifiable/Attainment.

[a] Includes Indian Country located in each county or area, except as otherwise specified.

[1] December 31, 2011 unless otherwise noted.

[43 FR 8964, Mar. 3, 1978]

EDITORIAL NOTE: For FEDERAL REGISTER citations affecting § 81.320 see the List of CFR Sections Affected, which appears in the Finding Aids section of the printed volume and at *www.fdsys.gov*.

EFFECTIVE DATE NOTE: At 77 FR 30127, May 21, 2012, § 81.320 was amended by revising the table heading for ''Maine—Ozone (8-Hour Standard)'' to read ''Maine—1997 8-Hour Ozone NAAQS (Primary and Secondary)''; by adding a new table entitled ''Maine—2008 8-Hour Ozone NAAQS (Primary and Secondary)'' following the newly designated table ''Maine—1997 8-Hour Ozone NAAQS (Primary and Secondary)'', effective July 20, 2012. For the convenience of the user, the added text is set forth as follows:

§ 81.320 Maine.

* * * * *

Maine—2008 8-Hour Ozone NAAQS (Primary and secondary)

Designated area	Designation		Classification	
	Date [1]	Type	Date [1]	Type
Statewide: [2]		Unclassifiable/Attainment		
Androscoggin County				
Aroostook County				
Cumberland County				
Franklin County				
Hancock County				
Kennebec County				
Knox County				
Lincoln County				
Oxford County				
Penobscot County				
Piscataquis County				
Sagadahoc County				
Somerset County				
Waldo County				
Washington County				
York County				

[1] This date is July 20, 2012, unless otherwise noted.
[2] Includes any Indian country in each county or area, unless otherwise specified.

* * * * *

§ 81.321 Maryland.

Maryland—TSP

Designated area	Does not meet primary standards	Does not meet secondary standards	Cannot be classified	Better than national standards
Metropolitan Baltimore Intrastate AQCR:				
(a) Baltimore City:				
#111 Zones 61, 65–68 [1]		X		
#112 Zone 72		X		
#113 Zones 76–80		X		
#117 Zones 94–100, 102, 103, 105–11		X		
#118 Zones 114–137		X		
#119 Zones 138, 140, 144, 146, 149	X			
Zones 139, 141–143, 145, 147, 150–56		X		
#120 Zones 157–66	X			
#121 Zones 168–70, 172, 176–78, 180, 181	X			
Zones 167, 171, 173–75, 179, 182		X		
#123 Zones 187–90		X		
#Zones 193–198	X			
Zones 191, 192	X			
#125 Zones 199–203		X		
#126 Zone 207	X			
Zones 204–06		X		
(b) Baltimore County:				
#325 Zones 417, 418, 420, 421		X		

Maryland—TSP

Designated area	Does not meet primary standards	Does not meet secondary standards	Cannot be classified	Better than national standards
#326 Zones 428, 431		X		
#328 Zone 446		X		
#329 Zones 449, 453–58	X			
Zones 450–52, 459		X		
#330 Zones 461, 462	X			
Zones 460, 463–68		X		
#331 Zones 469–72		X		
(c) Anne Arundel County:				
#201 Zones 208, 209		X		
#203 Zones 221–28		X		
#204 Zones 230		X		
(d) Remainder of AQCR				X
Cumberland-Keyser Interstate AQCR:				
(a) Election District No. 8, Luke, MD				X
(b) Remainder AQCR				X
Central Maryland Interstate AQCR				X
National Capital Interstate AQCR				X
Southern Maryland Intrastate AQCR				X
Eastern Shore Intrastate AQCR				X

[1] Regional Planning Districts—defined by the Baltimore Regional Planning Council, Maps showing Districts and non-attainment areas available for inspection at the offices of: EPA, Region III, 6th and Walnut Streets, Phila., Pa. 19106; Md. Bureau of Air Quality and Noise Control, 201 West Preston Street, Baltimore, Md. 21201.

Maryland—SO_2

Designated area	Does not meet primary standards	Does not meet secondary standards	Cannot be classified	Better than national standards
Cumberland-Keyser Interstate AQCR, Election District No. 8, Luke, Md			X	
Remainder of State				X

Maryland—Carbon Monoxide

Designated area	Designation		Classification	
	Date [1]	Type	Date [1]	Type
Baltimore Area				
Baltimore City (part)				
Regional Planning District No. 118 (generally corresponding to the Central Business District).	12/15/95	Attainment		
Washington Area				
Montgomery County (part)				
Election Districts 4, 7, 13		Attainment		
Prince George's County (part)				
Election Districts 2, 6, 12, 16, 17, 18		Attainment		
AQCR 047 National Capital Interstate (Remainder of)		Unclassifiable/Attainment		
Montgomery County (part)				
Remainder of county				
Prince George's County (part)				
Remainder of County				
AQCR 112 Central Maryland Intrastate		Unclassifiable/Attainment		
Frederick County				
AQCR 113 Cumberland-Keyser Interstate		Unclassifiable/Attainment		
Allegany County				
Garrett County				
Washington County				
AQCR 114 Eastern Shore Interstate		Unclassifiable/Attainment		
Caroline County				
Cecil County				
Dorchester County				
Kent County				
Queen Anne's County				
Kent County	12/22/06	Attainment		
Queen Anne's County	12/22/06	Attainment		
Somerset County				
Talbot County				

Maryland—Carbon Monoxide

Designated area	Designation		Classification	
	Date [1]	Type	Date [1]	Type
Wicomico County				
Worcester County				
AQCR 115 Metro. Baltimore Intrastate (Remainder of)	.....	Unclassifiable/Attainment		
Anne Arundel County				
Baltimore City (part)				
Remainder of City				
Baltimore County				
Carroll County				
Harford County				
Howard County				
AQCR 116 Southern Maryland Intrastate	.....	Unclassifiable/Attainment		
Calvert County				
Charles County				
St. Mary's County				

[1] This date is November 15, 1990, unless otherwise noted.

Maryland—Ozone (1-Hour Standard)[2]

Designated area	Designation		Classification	
	Date [1]	Type	Date [1]	Type
Baltimore Area:				
Anne Arundel County	11/15/90	Nonattainment	11/15/90	Severe-15.
Baltimore				
City of Baltimore	11/15/90	Nonattainment	11/15/90	Severe-15.
Baltimore County	11/15/90	Nonattainment	11/15/90	Severe-15.
Carroll County	11/15/90	Nonattainment	11/15/90	Severe-15.
Harford County	11/15/90	Nonattainment	11/15/90	Severe-15.
Howard County	11/15/90	Nonattainment	11/15/90	Severe-15.
Kent County and Queen Anne's County Area:				
Kent County	10/21/04	Attainment		
Queen Anne's County	10/21/04	Attainment		
Philadelphia-Wilmington-Trenton Area:				
Cecil County	11/15/90	Nonattainment	11/15/90	Severe-15.
Washington, DC Area:				
Calvert County	.....	Nonattainment	3/25/03	Severe
Charles County	.....	Nonattainment	3/25/03	Severe
Frederick County	.....	Nonattainment	3/25/03	Severe
Montgomery County	.....	Nonattainment	3/25/03	Severe
Prince George's County	.....	Nonattainment	3/25/03	Severe
AQCR 113 Cumberland-Keyser Interstate	.....	Unclassifiable/Attainment		
Allegany County				
Garrett County				
Washington County				
AQCR 114 Eastern Shore Interstate (Remainder of)	.....	Unclassifiable/Attainment		
Caroline County				
Dorchester County				
Somerset County				
Talbot County				
Wicomico County				
Worcester County				
AQCR 116 Southern Maryland Intrastate (Remainder of).	.....	Unclassifiable/Attainment		
St. Mary's County				

[1] This date is October 18, 2000, unless otherwise noted.
[2] The 1-hour ozone standard is revoked effective June 15, 2005 for all areas in Maryland except the Washington Co. area where it is revoked effective April 15, 2009.

Maryland—NO_2 (1971 Annual Standard)

Designated area	Does not meet primary standards	Cannot be classified or better than national standards
State of Maryland	.....	X

Maryland—NO_2 (2010 1-Hour Standard)

Designated area	Designation [a]	
	Date [1]	Type
Allegany County		Unclassifiable/Attainment.
Anne Arundel County		Unclassifiable/Attainment.
Baltimore County		Unclassifiable/Attainment.
City of Baltimore		Unclassifiable/Attainment.
Calvert County		Unclassifiable/Attainment.
Caroline County		Unclassifiable/Attainment.
Carroll County		Unclassifiable/Attainment.
Cecil County		Unclassifiable/Attainment.
Charles County		Unclassifiable/Attainment.
Dorchester County		Unclassifiable/Attainment.
Frederick County		Unclassifiable/Attainment.
Garrett County		Unclassifiable/Attainment.
Harford County		Unclassifiable/Attainment.
Howard County		Unclassifiable/Attainment.
Kent County		Unclassifiable/Attainment.
Montgomery County		Unclassifiable/Attainment.
Prince George's County		Unclassifiable/Attainment.
Queene Anne's County		Unclassifiable/Attainment.
St. Mary's County		Unclassifiable/Attainment.
Somerset County		Unclassifiable/Attainment.
Talbot County		Unclassifiable/Attainment.
Washington County		Unclassifiable/Attainment.
Wicomico County		Unclassifiable/Attainment.
Worchester County		Unclassifiable/Attainment.

[a] Includes Indian Country located in each county or area, except as otherwise specified.
[1] This date is 90 days after October 31, 2011, unless otherwise noted.

Maryland—Ozone (8-Hour Standard)

Designated area	Designation [a]		Category/classification	
	Date [1]	Type	Date [1]	Type
Baltimore, MD:				
Anne Arundel County		Nonattainment	(5)	Subpart 2/Serious.[4]
City of Baltimore		Nonattainment	(5)	Subpart 2/Serious.[4]
Baltimore County		Nonattainment	(5)	Subpart 2/Serious.[4]
Carroll County		Nonattainment	(5)	Subpart 2/Serious.[4]
Harford County		Nonattainment	(5)	Subpart 2/Serious.[4]
Howard County		Nonattainment	(5)	Subpart 2/Serious.[4]
Kent and Queen Anne's Area				
Kent County	January 22, 2007	Attainment		
Queen Anne's County	January 22, 2007	Attainment		
Washington County (Hagerstown), MD:				
Washington County	(2)	Attainment.		
Philadelphia-Wilmin-Atlantic Ci, PA-NJ-MD-DE:				
Cecil County		Nonattainment		Subpart 2/Moderate.[4]
Washington, DC-MD-VA:				
Calvert County		Nonattainment		Subpart 2/Moderate.
Charles County		Nonattainment		Subpart 2/Moderate.
Frederick County		Nonattainment		Subpart 2/Moderate.
Montgomery County		Nonattainment		Subpart 2/Moderate.
Prince George's County		Nonattainment		Subpart 2/Moderate.
AQCR 113 Cumberland-Keyser Interstate		Unclassifiable/Attainment		
Allegany County.				
Garrett County.				
AQCR 114 Eastern Shore Interstate (remainder of)		Unclassifiable/Attainment		

Maryland—Ozone (8-Hour Standard)

Designated area	Designation [a]		Category/classification	
	Date [1]	Type	Date [1]	Type
Caroline County.				
Dorchester County.				
Somerset County.				
Talbot County.				
Wicomico County.				
Worcester County.				
AQCR 116 Southern Maryland Intrastate (remainder of).	.....	Unclassifiable/Attainment		
St. Mary's County.				

[a] Includes Indian Country located in each county or area, except as otherwise specified.
[1] This date is June 15, 2004, unless otherwise noted.
[2] Effective April 15, 2008.
[3] November 22, 2004.
[4] Attainment date is June 15, 2013.
[5] Effective March 2, 2012.

Maryland—PM2.5

Designated area	Designation [a]	
	Date [1]	Type
Baltimore, MD:		
Anne Arundel County	.....	NonAttainment.
Baltimore County	.....	NonAttainment.
Carroll County	.....	NonAttainment.
Harford County	.....	NonAttainment.
Howard County	.....	NonAttainment.
City of Baltimore	.....	NonAttainment.
Martinsburg, WV-Hagerstown, MD:		
Washington County	.....	NonAttainment.
Washington, DC-MD-VA:		
Charles County	.....	NonAttainment.
Frederick County	.....	NonAttainment.
Montgomery County	.....	NonAttainment.
Prince George's County	.....	NonAttainment.
AQCR 113 Cumberland-Keyser Interstate:		
Allegany County	.....	Unclassifiable/Attainment.
Garrett County	.....	Unclassifiable/Attainment.
AQCR 114 Eastern Shore Interstate (remainder of):		
Caroline County	.....	Unclassifiable/Attainment.
Cecil County	.....	Unclassifiable/Attainment.
Dorchester County	.....	Unclassifiable/Attainment.
Kent County	.....	Unclassifiable/Attainment.
Queen Anne's County	.....	Unclassifiable/Attainment.
Somerset County	.....	Unclassifiable/Attainment.
Talbot County	.....	Unclassifiable/Attainment.
Wicomico County	.....	Unclassifiable/Attainment.
Worcester County	.....	Unclassifiable/Attainment.
AQCR 116 Southern Maryland Intrastate (remainder of):		
Calvert County	.....	Unclassifiable/Attainment.
St. Mary's County	.....	Unclassifiable/Attainment.

[a] Includes Indian Country located in each county or area, except as otherwise specified.
[1] This date is 90 days after January 5, 2005, unless otherwise noted.

Maryland—$PM_{2.5}$ [24-hour NAAQS]

Designated area	Designation for the 1997 NAAQS [a]		Designation for the 2006 NAAQS [a]	
	Date [1]	Type	Date [2]	Type
AQCR 047 National Capital Interstate (DC–MD–VA) (part):				
Montgomery County	.....	Unclassifiable/Attainment.	.....	Unclassifiable/Attainment.
Prince George's County	.....	Unclassifiable/Attainment.	.....	Unclassifiable/Attainment.
Metropolitan Baltimore Intrastate AQCR:				
Anne Arundel County	.....	Unclassifiable/Attainment.	.....	Unclassifiable/Attainment.
Baltimore County	.....	Unclassifiable/Attainment.	.....	Unclassifiable/Attainment.

Maryland—$PM_{2.5}$ [24-hour NAAQS]

Designated area	Designation for the 1997 NAAQS [a]		Designation for the 2006 NAAQS [a]	
	Date [1]	Type	Date [2]	Type
City of Baltimore		Unclassifiable/Attainment.		Unclassifiable/Attainment.
Carroll County		Unclassifiable/Attainment.		Unclassifiable/Attainment.
Harford County		Unclassifiable/Attainment.		Unclassifiable/Attainment.
Howard County		Unclassifiable/Attainment.		Unclassifiable/Attainment.
AQCR 112 Central Maryland Intrastate:				
Frederick County		Unclassifiable/Attainment.		Unclassifiable/Attainment.
AQCR 113 Cumberland-Keyser Interstate:				
Allegany County		Unclassifiable/Attainment.		Unclassifiable/Attainment.
Garrett County		Unclassifiable/Attainment.		Unclassifiable/Attainment.
Washington County		Unclassifiable/Attainment.		Unclassifiable/Attainment.
AQCR 114 Eastern Shore Intrastate:				
Caroline County		Unclassifiable/Attainment.		Unclassifiable/Attainment.
Cecil County		Unclassifiable/Attainment.		Unclassifiable/Attainment.
Dorchester County		Unclassifiable/Attainment.		Unclassifiable/Attainment.
Kent County		Unclassifiable/Attainment.		Unclassifiable/Attainment.
Queen Anne's County		Unclassifiable/Attainment.		Unclassifiable/Attainment.
Somerset County		Unclassifiable/Attainment.		Unclassifiable/Attainment.
Talbot County		Unclassifiable/Attainment.		Unclassifiable/Attainment.
Wicomico County		Unclassifiable/Attainment.		Unclassifiable/Attainment.
Worcester County		Unclassifiable/Attainment.		Unclassifiable/Attainment.
AQCR 116 Southern Maryland Intrastate:				
Calvert County		Unclassifiable/Attainment.		Unclassifiable/Attainment.
Charles County		Unclassifiable/Attainment.		Unclassifiable/Attainment.
St. Mary's County		Unclassifiable/Attainment.		Unclassifiable/Attainment.

[a] Includes Indian Country located in each county or area, except as otherwise specified.
[1] This date is 90 days after January 5, 2005, unless otherwise noted.
[2] This date is 30 days after November 13, 2009, unless otherwise noted.

Maryland—2008 Lead NAAQS

Designated area	Designation for the 2008 NAAQS [a]	
	Date [1]	Type
Whole State		Unclassifiable/Attainment.

[a] Includes Indian Country located in each county or area, except as otherwise specified.
[1] December 31, 2011 unless otherwise noted.

[43 FR 40510, Sept. 12, 1978]

EDITORIAL NOTE: For FEDERAL REGISTER citations affecting § 81.321 see the List of CFR Sections Affected, which appears in the Finding Aids section of the printed volume and at *www.fdsys.gov*.

EFFECTIVE DATE NOTE: At 77 FR 30127, May 21, 2012, § 81.321 was amended by revising the table heading for ''Maryland—Ozone (8-Hour Standard)'' to read ''Maryland—1997 8-Hour Ozone NAAQS (Primary and Secondary)''; by adding a new table entitled ''Maryland—2008 8-Hour Ozone NAAQS (Primary and Secondary)'' following the newly designated table ''Maryland—1997 8-Hour Ozone NAAQS (Primary and Secondary)'', effective July 20, 2012. For the convenience of the user, the added text is set forth as follows:

§ 81.321 Maryland.

* * * * *

Maryland—2008 8-Hour Ozone NAAQS (Primary and secondary)

Designated area	Designation		Classification	
	Date [1]	Type	Date [1]	Type
Baltimore, MD: [2]		Nonattainment		Moderate.
Anne Arundel County				
Baltimore County				
Baltimore City				
Carroll County				
Harford County				
Howard County				
Philadelphia-Wilmington-Atlantic City, PA-NJ-MD-DE: [2].		Nonattainment		Marginal.
Cecil County				
Washington, DC-MD-VA: [2]		Nonattainment		Marginal.
Calvert County				
Charles County				
Frederick County				
Montgomery County				
Prince George's County				
AQCR 113 Cumberland-Keyser Interstate [3]		Unclassifiable/Attainment		
Allegany County				
Garrett County				
Washington County				
AQCR 114 Eastern Shore Interstate: (remainder) [3]		Unclassifiable/Attainment		
Caroline County				
Dorchester County				
Kent County				
Queen Anne's County				
Somerset County				
Talbot County				
Wicomico County				
Worcester County				
AQCR 116 Southern Maryland Intrastate: (remainder) [3].		Unclassifiable/Attainment		
St. Mary's County				

[1] This date is July 20, 2012, unless otherwise noted.
[2] Excludes Indian country located in each area, unless otherwise noted.
[3] Includes any Indian country in each county or area, unless otherwise specified.

* * * * *

§ 81.322 Massachusetts.

Massachusetts—TSP

Designated area	Does not meet primary standards	Does not meet secondary standards	Cannot be classified	Better than national standards
Berkshire AQCR:				
Adams			X	
North Adams			X	
Pittsfield			X	
All other cities and towns				X
Central Massachusetts AQCR:				
Worcester			X	
Athol			X	
Gardner			X	
Grafton			X	
Leominster			X	
Millbury			X	
Shrewsbury			X	
All other cities and towns				X
Merrimack Valley AQCR:				
Haverhill			X	
Lawrence			X	
All other cities and towns				X
Pioneer Valley AQCR:				

Massachusetts—TSP

Designated area	Does not meet primary standards	Does not meet secondary standards	Cannot be classified	Better than national standards
Springfiled			X	
Chicopee			X	
Holyoke			X	
Northampton			X	
South Hadley			X	
West Springfiled			X	
All other cities and towns				X
Southeastern Massachusetts AQCR:				
Fall River			X	
Attleboro			X	
New Bedford			X	
Taunton			X	
All other cities and towns				X
Metropolitan Boston AQCR:				
Topsfield			X	
Wakefield			X	
Walpole			X	
Watertown			X	
Wayland			X	
Wellesley			X	
Wenham			X	
Weston			X	
Westwood			X	
Weymouth			X	
Winchester			X	
Winthrop			X	
Boston			X	
Danvers			X	
Cambridge			X	
Framingham			X	
Lynn			X	
Marblehead			X	
Norwood			X	
Medford			X	
Peabody			X	
Quincy			X	
Revere			X	
Swampscott			X	
Waltham			X	
Arlington			X	
Belmont			X	
Beverly			X	
Braintree			X	
Brockton			X	
Brookline			X	
Canton			X	
Chelsa			X	
Dedham			X	
Everett			X	
Malden			X	
Marlborough			X	
Melrose			X	
Middletown			X	
Milton			X	
Natick			X	
Needham			X	
Newton			X	
Salem			X	
Saugus			X	
Somerville			X	
Southborough			X	
Stoneham			X	
All other cities and towns				X

Massachusetts—SO_2

Designated area	Does not meet primary standards	Does not meet secondary standards	Cannot be classified	Better than national standards
Boston and Milton	.....	.....	.....	X
Belchertown, Granby, Ludlow, Palmer, South Hadley and Wilbraham	.....	.....	.....	X
Remaining individual cities and towns [1]	.....	.....	.....	X

[1] Each city and town, with the exception of Boston and Milton and Belchertown, Granby, Ludlow, Palmer, South Hadley and Wilbraham as indicated above, is a separate Section 107 designated attainment area.

Massachusetts—Carbon Monoxide

Designated area	Designation		Classification	
	Date [1]	Type	Date [1]	Type
Boston area:				
Middlesex County (part) Cities of Cambridge, Everett, Malden, Medford, and Somerville.	4/1/96	Attainment		
Norfolk County (part) Quincy City	4/1/96	Attainment		
Suffolk County (part) Cities of Boston, Chelsea, and Revere.	4/1/96	Attainment		
Lowell area:				
Middlesex County (part) Lowell City	4/22/02	Attainment		
Springfield area:				
Hampden County (part) Springfield City	4/22/02	Attainment		
Waltham area:				
Middlesex County (part) Waltham City	4/22/02	Attainment		
Worcester area:				
Worcester County (part) Worcester City	4/22/02	Attainment		
AQCR 042 Hartford-New Haven-Springfield—All portions except Springfield City.	.....	Unclassifiable/Attainment		
AQCR 117 Berkshire Interstate	.....	Unclassifiable/Attainment		
AQCR 118 Central Massachusetts Interstate—All portions except Worcester City.	.....	Unclassifiable/Attainment		
AQCR 119 Metropolitan Boston Intrastate—All portions except cities of Boston, Cambridge, Chelsea, Everett, Malden, Medford, Quincy, Revere, and Waltham..	.....	Unclassifiable/Attainment		
AQCR 120 Metropolitan Providence Interstate	.....	Unclassifiable/Attainment		
AQCR 121 Merrimack Valley-S New Hampshire—All portions except Lowell City.	.....	Unclassifiable/Attainment		

[1] This date is November 15, 1990, unless otherwise noted.

Massachusetts—Ozone (1-Hour Standard)[3]

Designated area	Designation		Classification	
	Date [1]	Type	Date [1]	Type
Boston-Lawrence-Worcester (E. Mass) Area:				
Barnstable County	([2])	Nonattainment	([2])	Serious.
Bristol County	([2])	Nonattainment	([2])	Serious.
Dukes County	([2])	Nonattainment	([2])	Serious.
Essex County	([2])	Nonattainment	([2])	Serious.
Middlesex County	([2])	Nonattainment	([2])	Serious.
Nantucket County	([2])	Nonattainment	([2])	Serious.
Norfolk County	([2])	Nonattainment	([2])	Serious.
Plymouth County	([2])	Nonattainment	([2])	Serious.
Suffolk County	([2])	Nonattainment	([2])	Serious.
Worcester County	([2])	Nonattainment	([2])	Serious.
Springfield (W. Mass) Area:				
Berkshire County	.....	Nonattainment	.....	Serious.
Franklin County	.....	Nonattainment	.....	Serious.
Hampden County	.....	Nonattainment	.....	Serious.
Hampshire County	.....	Nonattainment	.....	Serious.

[1] This date is November 15, 1990, unless otherwise noted.
[2] This date is January 16, 2001.
[3] The 1-hour ozone standard is revoked effective June 15, 2005 for all areas in Massachusetts.

Massachusetts—NO_2 (1971 Annual Standard)

Designated area	Does not meet primary standards	Does not meet secondary standards	Cannot be classified	Better than national standard
Each Individual City and Town [1]	.....	.....	.....	X

[1] Each city and town is a separate Section 107 desginated Attainment Area.

Massachusetts—NO_2 (2010 1-Hour Standard)

Designated area	Designation [a]	
	Date [1]	Type
State of Massachusetts	.....	Unclassifiable/Attainment.

[a] Includes Indian Country located in each county or area, except as otherwise specified.
[1] This date is 90 days after October 31, 2011, unless otherwise noted.

Massachusetts—Ozone (8-Hour Standard)

Designated area	Designation [a]		Category/classification	
	Date [1]	Type	Date [1]	Type
Boston-Lawrence-Worcester (E. Mass), MA:				
Barnstable County	.....	Nonattainment	.....	Subpart 2/Moderate.
Bristol County	.....	Nonattainment	.....	Subpart 2/Moderate.
Dukes County	.....	Nonattainment	.....	Subpart 2/Moderate.
Essex County	.....	Nonattainment	.....	Subpart 2/Moderate.
Middlesex County	.....	Nonattainment	.....	Subpart 2/Moderate.
Nantucket County	.....	Nonattainment	.....	Subpart 2/Moderate.
Norfolk County	.....	Nonattainment	.....	Subpart 2/Moderate.
Plymouth County	.....	Nonattainment	.....	Subpart 2/Moderate.
Suffolk County	.....	Nonattainment	.....	Subpart 2/Moderate.
Worcester County	.....	Nonattainment	.....	Subpart 2/Moderate.
Springfield (W. Mass), MA:				
Berkshire County	.....	Nonattainment	.....	Subpart 2/Moderate.
Franklin County	.....	Nonattainment	.....	Subpart 2/Moderate.
Hampden County	.....	Nonattainment	.....	Subpart 2/Moderate.
Hampshire County	.....	Nonattainment	.....	Subpart 2/Moderate.

[a] Includes Indian Country located in each county or area, except as otherwise specified.
[1] This date is June 15, 2004, unless otherwise noted.

Massachusetts—$PM_{2.5}$ (24-Hour NAAQS)

Designated area	Designation [a]	
	Date [1]	Type
Statewide:		
Barnstable County	.....	Unclassifiable/Attainment.
Berkshire County	.....	Unclassifiable/Attainment.
Bristol County	.....	Unclassifiable/Attainment.
Dukes County	.....	Unclassifiable/Attainment.
Essex County	.....	Unclassifiable/Attainment.
Franklin County	.....	Unclassifiable/Attainment.
Hampden County	.....	Unclassifiable/Attainment.
Hampshire County	.....	Unclassifiable/Attainment.
Middlesex County	.....	Unclassifiable/Attainment.
Nantucket County	.....	Unclassifiable/Attainment.
Norfolk County	.....	Unclassifiable/Attainment.
Plymouth County	.....	Unclassifiable/Attainment.
Suffolk County	.....	Unclassifiable/Attainment.
Worcester County	.....	Unclassifiable/Attainment.

[a] Includes Indian Country located in each county or area, except as otherwise specified.
[1] This date is 90 days after January 5, 2005, unless otherwise noted.

Massachusetts—$PM_{2.5}$ [24-hour NAAQS]

Designated area	Designation for the 1997 NAAQS [a]		Designation for the 2006 NAAQS [a]	
	Date [1]	Type	Date [2]	Type
Statewide:				
Barnstable County	.....	Unclassifiable/Attainment.	.....	Unclassifiable/Attainment.

Massachusetts—$PM_{2.5}$ [24-hour NAAQS]

Designated area	Designation for the 1997 NAAQS [a]		Designation for the 2006 NAAQS [a]	
	Date [1]	Type	Date [2]	Type
Berkshire County		Unclassifiable/Attainment.		Unclassifiable/Attainment.
Bristol County		Unclassifiable/Attainment.		Unclassifiable/Attainment.
Dukes County		Unclassifiable/Attainment.		Unclassifiable/Attainment.
Essex County		Unclassifiable/Attainment.		Unclassifiable/Attainment.
Franklin County		Unclassifiable/Attainment.		Unclassifiable/Attainment.
Hampden County		Unclassifiable/Attainment.		Unclassifiable/Attainment.
Hampshire County		Unclassifiable/Attainment.		Unclassifiable/Attainment.
Middlesex County		Unclassifiable/Attainment.		Unclassifiable/Attainment.
Nantucket County		Unclassifiable/Attainment.		Unclassifiable/Attainment.
Norfolk County		Unclassifiable/Attainment.		Unclassifiable/Attainment.
Plymouth County		Unclassifiable/Attainment.		Unclassifiable/Attainment.
Suffolk County		Unclassifiable/Attainment.		Unclassifiable/Attainment.
Worcester County		Unclassifiable/Attainment.		Unclassifiable/Attainment.

[a] Includes Indian Country located in each county or area, except as otherwise specified.
[1] This date is 90 days after January 5, 2005, unless otherwise noted.
[2] This date is 30 days after November 13, 2009, unless otherwise noted.

Massachusetts—2008 Lead NAAQS

Designated area	Designation for the 2008 NAAQS [a]	
	Date [1]	Type
Whole State		Unclassifiable/Attainment.

[a] Includes Indian Country located in each county or area, except as otherwise specified.
[1] December 31, 2011 unless otherwise noted.

[43 FR 8964, Mar. 3, 1978]

EDITORIAL NOTE: For FEDERAL REGISTER citations affecting §81.322 see the List of CFR Sections Affected, which appears in the Finding Aids section of the printed volume and at *www.fdsys.gov*.

EFFECTIVE DATE NOTE: At 77 FR 30128, May 21, 2012, §81.322 was amended by revising the table heading for ''Massachusetts—Ozone (8-Hour Standard)'' to read ''Massachusetts—1997 8-Hour Ozone NAAQS (Primary and Secondary)''; by adding a new table entitled ''Massachusetts—2008 8-Hour Ozone NAAQS (Primary and Secondary)'' following the newly designated table ''Massachusetts—1997 8-Hour Ozone NAAQS (Primary and Secondary)'', effective July 20, 2012. For the convenience of the user, the added text is set forth as follows:

§81.322 Massachusetts.

* * * * *

Massachusetts—2008 8-Hour Ozone NAAQS (Primary and secondary)

Designated area	Designation		Classification	
	Date [1]	Type	Date [1]	Type
Dukes County, MA: [2]		Nonattainment		Marginal.
Dukes County Wampanoag Tribe of Gay Head (Aquinnah) of Massachusetts [3]				
Rest of State: [4]				
Barnstable County		Unclassifiable/Attainment		
Berkshire County		Unclassifiable/Attainment		
Bristol County		Unclassifiable/Attainment		

Massachusetts—2008 8-Hour Ozone NAAQS (Primary and secondary)

Designated area	Designation		Classification	
	Date [1]	Type	Date [1]	Type
Essex County	.....	Unclassifiable/Attainment		
Franklin County	.....	Unclassifiable/Attainment		
Hampden County.	.....	Unclassifiable/Attainment		
Hampshire County	.....	Unclassifiable/Attainment		
Middlesex County	.....	Unclassifiable/Attainment		
Nantucket County	.....	Unclassifiable/Attainment		
Norfolk County	.....	Unclassifiable/Attainment		
Plymouth County	.....	Unclassifiable/Attainment		
Suffolk County	.....	Unclassifiable/Attainment		
Worcester County	.....	Unclassifiable/Attainment		

[1] This date is July 20, 2012, unless otherwise noted.
[2] Excludes Indian country located in each area, unless otherwise noted.
[3] Includes Indian country of the tribe listed in this table located in the identified area. Information pertaining to areas of Indian country in this table is intended for CAA planning purposes only and is not an EPA determination of Indian country status or any Indian country boundary. EPA lacks the authority to establish Indian country land status, and is making no determination of Indian country boundaries, in this table.
[4] Includes any Indian country in each county or area, unless otherwise specified.

* * * * *

§ 81.323 Michigan.

Michigan—SO_2

Designated area	Does not meet primary standards	Does not meet secondary standards	Cannot be classified	Better than national standards
AQCR 82 (Michigan portion)	.....	.....	.....	X
AQCR 122				
1. Midland County, R2E, T13N, sections 1–6, R2E, T13N, sections 1–6, R2E, T14N, sections 7–36	.....	.....	.....	X
AQCR 123	.....	.....	.....	X
AQCR 124 (Michigan portion)	.....	.....	.....	X
AQCR 125	.....	.....	.....	X
AQCR 126	.....	.....	.....	X

Michigan—Carbon Monoxide

Designated Area	Designation		Classification	
	Date [1]	Type	Date [1]	Type
DETROIT AREA.				
Areas included within the following (counterclockwise): Lake St. Clair to 14 Mile Road to Kelly Road, N. to 15 Mile Road to Hayes Road, S. to 14 Mile Road to Clawson City Boundary, following N. Clawson City boundary to N. Royal Oak boundary to 13 Mile Road to Evergreen Road to southern Beverly Hills City boundary to southern Bingham Farms City boundary to southern Franklin Hills City boundary to Inkster Road, south to Pennsylvania Road extending east to the Detroit River. Macomb County (part).	August 30, 1999	Attainment		
Oakland County (part)	August 30, 1999	Attainment		
Wayne County (part)	August 30, 1999	Attainment		
AQCR 082 South Bend-Elkhart-Benton Harbor Interstate.	.....	Unclassifiable/Attainment		
Berrien County				
Cass County				
Van Buren County				
AQCR 122 Central Michigan Intrastate	.....	Unclassifiable/Attainment		
Allegan County				
Arenac County				
Bay County				
Clare County				

Michigan—Carbon Monoxide

Designated Area	Designation		Classification	
	Date [1]	Type	Date [1]	Type
Genesee County				
Gladwin County				
Gratiot County				
Huron County				
Ionia County				
Iosco County				
Isabella County				
Kent County				
Lake County				
Lapeer County				
Mason County				
Mecosta County				
Midland County				
Montcalm County				
Muskegon County				
Newaygo County				
Oceana County				
Ogemaw County				
Osceola County				
Ottawa County				
Roscommon County				
Saginaw County				
Sanilac County				
Shiawassee County				
Tuscola County				
AQCR 123 Metro Detroit-Port Huron Intrastate (Remainder of).	.....	Unclassifiable/Attainment		
Macomb County (part)				
Remainder of County				
Oakland County (part)				
Remainder of County				
St. Clair County				
Wayne County (part)				
Remainder of County				
AQCR 124 Metropolitan Toledo Interstate	.....	Unclassifiable/Attainment		
Monroe County				
AQCR 125 South Central Michigan Intrastate	.....	Unclassifiable/Attainment		
Barry County				
Branch County				
Calhoun County				
Clinton County				
Eaton County				
Hillsdale County				
Ingham County				
Jackson County				
Kalamazoo County				
Lenawee County				
Livingston County				
St. Joseph County				
Washtenaw County				
AQCR 126 Upper Michigan Intrastate	.....	Unclassifiable/Attainment		
Alcona County				
Alger County				
Alpena County				
Antrim County				
Baraga County				
Benzie County				
Charlevoix County				
Cheboygan County				
Chippewa County				
Crawford County				
Delta County				
Dickinson County				
Emmet County				
Gogebic County				
Grand Traverse County				
Houghton County				
Iron County				
Kalkaska County				
Keweenaw County				
Leelanau County				

Michigan—Carbon Monoxide

Designated Area	Designation		Classification	
	Date [1]	Type	Date [1]	Type
Luce County				
Mackinac County				
Manistee County				
Marquette County				
Menominee County				
Missaukee County				
Montmorency County				
Ontonagon County				
Oscoda County				
Otsego County				
Presque Isle County				
Schoolcraft County				
Wexford County				

[1] This date is November 15, 1990, unless otherwise noted.

Michigan—Ozone (1-Hour Standard)[4]

Designated area	Designation		Classification	
	Date [1]	Type	Date [1]	Type
Allegan County Area:				
Allegan County	January 16, 2001	Attainment		
Barry County Area:				
Barry County	.....	Unclassifiable/Attainment		
Battle Creek Area:				
Calhoun County	.....	Unclassifiable/Attainment		
Benton Harbor Area:				
Berrien County	.....	Unclassifiable/Attainment		
Branch County Area:				
Branch County	.....	Unclassifiable/Attainment		
Cass County Area:				
Cass County	.....	Unclassifiable/Attainment		
Detroit-Ann Arbor Area:				
Livingston County	.....	Attainment		
Macomb County	.....	Attainment		
Monroe County	.....	Attainment		
Oakland County	.....	Attainment		
St. Clair County	.....	Attainment		
Washtenaw County	.....	Attainment		
Wayne County	.....	Attainment		
Flint Area:				
Genesee County	January 16, 2001	Attainment		
Grand Rapids Area:				
Kent County	.....	Attainment		
Ottawa County	.....	Attainment		
Gratiot County Area:				
Gratiot County	.....	Unclassifiable/Attainment		
Hillsdale County Area:				
Hillsdale County	.....	Unclassifiable/Attainment		
Huron County Area:				
Huron County	.....	Unclassifiable/Attainment		
Ionia County Area:				
Ionia County	.....	Unclassifiable/Attainment		
Jackson Area:				
Jackson County	.....	Unclassifiable/Attainment		
Kalamazoo Area:				
Kalamazoo County	.....	Unclassifiable/Attainment		
Lansing-East Lansing Area:				
Clinton County	.....	Unclassifiable/Attainment		
Eaton County	.....	Unclassifiable/Attainment		
Ingham County	.....	Unclassifiable/Attainment		
Lapeer County Area:				
Lapeer County	.....	Unclassifiable/Attainment		
Lenawee County Area:				
Lenawee County	.....	Unclassifiable/Attainment		
Montcalm Area:				
Montcalm County	.....	Unclassifiable/Attainment		
Muskegon Area:				

Michigan—Ozone (1-Hour Standard)[4]

Designated area	Designation		Classification	
	Date [1]	Type	Date [1]	Type
Muskegon County	October 18, 2000	Attainment		
Saginaw-Bay City-Midland Area:				
Bay County	January 16, 2001	Attainment		
Midland County	January 16, 2001	Attainment		
Saginaw County	January 16, 2001	Attainment		
Sanilac County Area:				
Sanilac County	.....	Unclassifiable/Attainment		
Shiawassee County Area:				
Shiawassee County	.....	Unclassifiable/Attainment		
St. Joseph County Area:				
St. Joseph County	.....	Unclassifiable/Attainment		
Tuscola County Area:				
Tuscola County	.....	Unclassifiable/Attainment		
Van Buren County Area:				
Van Buren County	.....	Unclassifiable/Attainment		
AQCR 122 Central Michigan Intrastate (Remainder of):.	.....	Unclassifiable/Attainment		
Arenac County				
Clare County				
Gladwin County				
Iosco County				
Isabella County				
Lake County				
Mason County				
Mecosta County				
Newaygo County				
Oceana County				
Ogemaw County				
Osceola County				
Roscommon County				
AQCR 126 Upper Michigan Intrastate (part) Marquette County.	.....	Unclassifiable/Attainment		
AQCR 126 Upper Michigan Intrastate (Remainder of):.	.....	Unclassifiable/Attainment		
Alcona County				
Alger County				
Alpena County				
Antrim County				
Baraga County				
Benzie County				
Charlevoix County				
Cheboygan County				
Chippewa County				
Crawford County				
Delta County				
Dickinson County				
Emmet County				
Gogebic County				
Grand Traverse County				
Houghton County				
Iron County				
Kalkaska County				
Keweenaw County				
Leelanau County				
Luce County				
Mackinac County				
Manistee County				
Menominee County				
Missaukee County				
Montmorency County				
Ontonagon County				
Oscoda County				
Otsego County				
Presque Isle County				
Schoolcraft County				
Wexford County				

[1] This date is October 18, 2000, unless otherwise noted.

[2] An area designated as an ozone nonattainment area as of the date of enactment of the CAAA of the 1990 that did not violate the ozone NAAQS during the period of 1987–1989.
[3] This date is January 16, 2001.
[4] The 1-hour ozone standard is revoked effective June 15, 2005 for all areas in Michigan. The Detroit-Ann Arbor, Flint, Grand Rapids, Muskegon, Allegan Co, and Saginaw-Bay City-Midland areas are maintenance areas for the 1-hour NAAQS for purposes of 40 CFR part 51 subpart X.

Michigan—PM–10

Designated Area	Designation		Classification	
	Date	Type	Date	Type
Wayne County—The area bounded by Michigan Avenue from its intersection with I–75 west to I–94, I–94 southwest to Greenfield Road, Greenfield Road south to Schaefer Road, Schaefer Road south and east to Jefferson Avenue, Jefferson Avenue south (Biddle Avenue through the city of Wyandotte) to Sibley Avenue, Sibley Avenue west to Fort Street, Fort Street south to King Road, King Road east to Jefferson Avenue, Jefferson Avenue south to Helen Road, Helen Road east extended to Trenton Channel, Trenton Channel north to the Detroit River, the Detroit River north to the Ambassador Bridge, Ambassador Bridge to I–75, I–75 to Michigan Avenue.	10/4/96	Attainment		
Rest of State	11/15/90	Unclassifiable	.....	

Michigan—NO_2 (1971 Annual Standard)

Designated area	Does not meet primary standards	Cannot be classified or better than national standards
State of Michigan	.....	X

Michigan—NO_2 (2010 1-Hour Standard)

Designated area	Designation [a]	
	Date [1]	Type
Alcona County	.....	Unclassifiable/Attainment.
Alger County	.....	Unclassifiable/Attainment.
Allegan County	.....	Unclassifiable/Attainment.
Alpena County	.....	Unclassifiable/Attainment.
Antrim County	.....	Unclassifiable/Attainment.
Arenac County	.....	Unclassifiable/Attainment.
Baraga County	.....	Unclassifiable/Attainment.
Barry County	.....	Unclassifiable/Attainment.
Bay County	.....	Unclassifiable/Attainment.
Benzie County	.....	Unclassifiable/Attainment.
Berrien County	.....	Unclassifiable/Attainment.
Branch County	.....	Unclassifiable/Attainment.
Calhoun County	.....	Unclassifiable/Attainment.
Cass County	.....	Unclassifiable/Attainment.
Charlevoix County	.....	Unclassifiable/Attainment.
Cheboygan County	.....	Unclassifiable/Attainment.
Chippewa County	.....	Unclassifiable/Attainment.
Clare County	.....	Unclassifiable/Attainment.
Clinton County	.....	Unclassifiable/Attainment.
Crawford County	.....	Unclassifiable/Attainment.
Delta County	.....	Unclassifiable/Attainment.
Dickinson County	.....	Unclassifiable/Attainment.
Eaton County	.....	Unclassifiable/Attainment.
Emmet County	.....	Unclassifiable/Attainment.
Genesee County	.....	Unclassifiable/Attainment.
Gladwin County	.....	Unclassifiable/Attainment.
Gogebic County	.....	Unclassifiable/Attainment.
Grand Traverse County	.....	Unclassifiable/Attainment.
Gratiot County	.....	Unclassifiable/Attainment.
Hillsdale County	.....	Unclassifiable/Attainment.
Houghton County	.....	Unclassifiable/Attainment.
Huron County	.....	Unclassifiable/Attainment.
Ingham County	.....	Unclassifiable/Attainment.
Ionia County	.....	Unclassifiable/Attainment.
Iosco County	.....	Unclassifiable/Attainment.
Iron County	.....	Unclassifiable/Attainment.

Michigan—NO_2 (2010 1-Hour Standard)

Designated area	Designation [a]	
	Date [1]	Type
Isabella County		Unclassifiable/Attainment.
Jackson County		Unclassifiable/Attainment.
Kalamazoo County		Unclassifiable/Attainment.
Kalkaska County		Unclassifiable/Attainment.
Kent County		Unclassifiable/Attainment.
Keweenaw County		Unclassifiable/Attainment.
Lake County		Unclassifiable/Attainment.
Lapeer County		Unclassifiable/Attainment.
Leelanau County		Unclassifiable/Attainment.
Lenawee County		Unclassifiable/Attainment.
Livingston County		Unclassifiable/Attainment.
Luce County		Unclassifiable/Attainment.
Mackinac County		Unclassifiable/Attainment.
Macomb County		Unclassifiable/Attainment.
Manistee County		Unclassifiable/Attainment.
Marquette County		Unclassifiable/Attainment.
Mason County		Unclassifiable/Attainment.
Mecosta County		Unclassifiable/Attainment.
Menominee County		Unclassifiable/Attainment.
Midland County		Unclassifiable/Attainment.
Missaukee County		Unclassifiable/Attainment.
Monroe County		Unclassifiable/Attainment.
Montcalm County		Unclassifiable/Attainment.
Montmorency County		Unclassifiable/Attainment.
Muskegon County		Unclassifiable/Attainment.
Newaygo County		Unclassifiable/Attainment.
Oakland County		Unclassifiable/Attainment.
Oceana County		Unclassifiable/Attainment.
Ogemaw County		Unclassifiable/Attainment.
Ontonagon County		Unclassifiable/Attainment.
Osceola County		Unclassifiable/Attainment.
Oscoda County		Unclassifiable/Attainment.
Otsego County		Unclassifiable/Attainment.
Ottawa County		Unclassifiable/Attainment.
Presque Isle County		Unclassifiable/Attainment.
Roscommon County		Unclassifiable/Attainment.
Saginaw County		Unclassifiable/Attainment.
St. Clair County		Unclassifiable/Attainment.
St. Joseph County		Unclassifiable/Attainment.
Sanilac County		Unclassifiable/Attainment.
Schoolcraft County		Unclassifiable/Attainment.
Shiawassee County		Unclassifiable/Attainment.
Tuscola County		Unclassifiable/Attainment.
Van Buren County		Unclassifiable/Attainment.
Washtenaw County		Unclassifiable/Attainment.
Wayne County		Unclassifiable/Attainment.
Wexford County		Unclassifiable/Attainment.

[a] Includes Indian Country located in each county or area, except as otherwise specified.
[1] This date is 90 days after October 31, 2011, unless otherwise noted.

Michigan—Ozone (8-Hour Standard)

Designated area	Designation [a]		Category/classification	
	Date [1]	Type	Date [1]	Type
Allegan County, MI:				
Allegan County	9/24/2010	Attainment		
Barry County Area:				
Benton Harbor, MI:				
Berrien County	5/16/2007	Attainment		
Benzie County, MI:				
Benzie County	5/16/2007	Attainment		
Branch County Area:				
Branch County		Unclassifiable/Attainment		
Cass County, MI:				
Cass County	5/16/2007	Attainment		
Detroit-Ann Arbor, MI:				
Lenawee County	6/29/2009	Attainment		
Livingston County.				
Macomb County.				

Michigan—Ozone (8-Hour Standard)

Designated area	Designation [a]		Category/classification	
	Date [1]	Type	Date [1]	Type
Monroe County.				
Oakland County.				
St. Clair County.				
Washtenaw County.				
Wayne County.				
Flint, MI:				
Genesee County	5/16/2007	Attainment		
Lapeer County.				
Grand Rapids, MI:				
Kent County	5/16/2007	Attainment		
Ottawa County.				
Gratiot County Area:				
Gratiot County	.....	Unclassifiable/Attainment		
Hillsdale County Area:				
Hillsdale County	.....	Unclassifiable/Attainment		
Huron County, MI:				
Huron County	5/16/2007	Attainment		
Ionia County Area:				
Ionia County	.....	Unclassifiable/Attainment		
Jackson Area:				
Jackson County	.....	Unclassifiable/Attainment		
Kalamazoo-Battle Creek, MI:				
Calhoun County	5/16/2007	Attainment		
Kalamazoo County.				
Van Buren County.				
Lansing-East Lansing, MI:				
Clinton County	5/16/2007	Attainment		
Eaton County.				
Ingham County.				
Mason County, MI:				
Mason County	5/16/2007	Attainment		
Montcalm Area:				
Montcalm County	.....	Unclassifiable/Attainment		
Muskegon, MI:				
Muskegon County	5/16/2007	Attainment		
Saginaw-Bay City-Midland Area:				
Bay County	.....	Unclassifiable/Attainment		
Midland County	.....	Unclassifiable/Attainment		
Saginaw County	.....	Unclassifiable/Attainment		
Sanilac County Area:				
Sanilac County	.....	Unclassifiable/Attainment		
Shiawassee County Area:				
Shiawassee County	.....	Unclassifiable/Attainment		
St Joseph County Area:				
St Joseph County	.....	Unclassifiable/Attainment		
Tuscola County Area:				
Tuscola County	.....	Unclassifiable/Attainment		
AQCR 122 Central Michigan Intrastate (remainder of).	.....	Unclassifiable/Attainment		
Arenac County				
Clare County				
Gladwin County				
Iosco County				
Isabella County				
Lake County				
Mecosta County				
Newaygo County				
Oceana County				
Ogemaw County				
Osceola County				
Roscommon County				
AQCR 126 Upper Michigan Intrastate (part)	.....	Unclassifiable/Attainment		
Marquette County				
AQCR 126 Upper Michigan Intrastate (remainder of)	.....	Unclassifiable/Attainment		
Alcona County				
Alger County				
Alpena County				
Antrim County				
Baraga County				
Charlevoix County				
Cheboygan County				

Michigan—Ozone (8-Hour Standard)

Designated area	Designation [a]		Category/classification	
	Date [1]	Type	Date [1]	Type
Chippewa County				
Crawford County				
Delta County				
Dickinson County				
Emmet County				
Gogebic County				
Grand Traverse County				
Houghton County				
Iron County				
Kalkaska County				
Keweenaw County				
Leelanau County				
Luce County				
Mackinac County				
Manistee County				
Menominee County				
Missaukee County				
Montmorency County				
Ontonagon County				
Oscoda County				
Otsego County				
Presque Isle County				
Schoolcraft County				
Wexford County				

[a] Includes Indian Country located in each county or area, except as otherwise specified.
[1] This date is June 15, 2004, unless otherwise noted.
[2] November 22, 2004.

Michigan—$PM_{2.5}$ (Annual NAAQS)

Designated area	Designation [a]	
	Date [1]	Type
Detroit-Ann Arbor, MI:		
Livingston County		Nonattainment.
Macomb County		Nonattainment.
Monroe County		Nonattainment.
Oakland County		Nonattainment.
St. Clair County		Nonattainment.
Washtenaw County		Nonattainment.
Wayne County		Nonattainment.
Rest of State:		
Alcona County		Unclassifiable/Attainment.
Alger County		Unclassifiable/Attainment.
Allegan County		Unclassifiable/Attainment.
Alpena County		Unclassifiable/Attainment.
Antrim County		Unclassifiable/Attainment.
Arenac County		Unclassifiable/Attainment.
Baraga County		Unclassifiable/Attainment.
Barry County		Unclassifiable/Attainment.
Bay County		Unclassifiable/Attainment.
Benzie County		Unclassifiable/Attainment.
Berrien County		Unclassifiable/Attainment.
Branch County		Unclassifiable/Attainment.
Calhoun County		Unclassifiable/Attainment.
Cass County		Unclassifiable/Attainment.
Charlevoix County		Unclassifiable/Attainment.
Cheboygan County		Unclassifiable/Attainment.
Chippewa County		Unclassifiable/Attainment.
Clare County		Unclassifiable/Attainment.
Clinton County		Unclassifiable/Attainment.
Crawford County		Unclassifiable/Attainment.
Delta County		Unclassifiable/Attainment.
Dickinson County		Unclassifiable/Attainment.
Eaton County		Unclassifiable/Attainment.
Emmet County		Unclassifiable/Attainment.
Genesee County		Unclassifiable/Attainment.
Gladwin County		Unclassifiable/Attainment.
Gogebic County		Unclassifiable/Attainment.
Grand Traverse County		Unclassifiable/Attainment.

Michigan—$PM_{2.5}$ (Annual NAAQS)

Designated area	Designation [a]	
	Date [1]	Type
Gratiot County		Unclassifiable/Attainment.
Hillsdale County		Unclassifiable/Attainment.
Houghton County		Unclassifiable/Attainment.
Huron County		Unclassifiable/Attainment.
Ingham County		Unclassifiable/Attainment.
Ionia County		Unclassifiable/Attainment.
Iosco County		Unclassifiable/Attainment.
Iron County		Unclassifiable/Attainment.
Isabella County		Unclassifiable/Attainment.
Jackson County		Unclassifiable/Attainment.
Kalamazoo County		Unclassifiable/Attainment.
Kalkaska County		Unclassifiable/Attainment.
Kent County		Unclassifiable/Attainment.
Keweenaw County		Unclassifiable/Attainment.
Lake County		Unclassifiable/Attainment.
Lapeer County		Unclassifiable/Attainment.
Leelanau County		Unclassifiable/Attainment.
Lenawee County		Unclassifiable/Attainment.
Luce County		Unclassifiable/Attainment.
Mackinac County		Unclassifiable/Attainment.
Manistee County		Unclassifiable/Attainment.
Marquette County		Unclassifiable/Attainment.
Mason County		Unclassifiable/Attainment.
Mecosta County		Unclassifiable/Attainment.
Menominee County		Unclassifiable/Attainment.
Midland County		Unclassifiable/Attainment.
Missaukee County		Unclassifiable/Attainment.
Montcalm County		Unclassifiable/Attainment.
Montmorency County		Unclassifiable/Attainment.
Muskegon County		Unclassifiable/Attainment.
Newaygo County		Unclassifiable/Attainment.
Oceana County		Unclassifiable/Attainment.
Ogemaw County		Unclassifiable/Attainment.
Ontonagon County		Unclassifiable/Attainment.
Osceola County		Unclassifiable/Attainment.
Oscoda County		Unclassifiable/Attainment.
Otsego County		Unclassifiable/Attainment.
Ottawa County		Unclassifiable/Attainment.
Presque Isle County		Unclassifiable/Attainment.
Roscommon County		Unclassifiable/Attainment.
Saginaw County		Unclassifiable/Attainment.
St. Joseph County		Unclassifiable/Attainment.
Sanilac County		Unclassifiable/Attainment.
Schoolcraft County		Unclassifiable/Attainment.
Shiawassee County		Unclassifiable/Attainment.
Tuscola County		Unclassifiable/Attainment.
Van Buren County		Unclassifiable/Attainment.
Wexford County		Unclassifiable/Attainment.

[a] Includes Indian Country located in each county or area, except as otherwise specified.
[1] This date is 90 days after January 5, 2005, unless otherwise noted.

Michigan—$PM_{2.5}$ [24-hour NAAQS]

Designated area	Designation for the 1997 NAAQS [a]		Designation for the 2006 NAAQS [a]	
	Date [1]	Type	Date [2]	Type
Detroit-Ann Arbor, MI:				
Livingston County		Unclassifiable/Attainment.		Nonattainment.
Macomb County		Unclassifiable/Attainment.		Nonattainment.
Monroe County		Unclassifiable/Attainment.		Nonattainment.
Oakland County		Unclassifiable/Attainment.		Nonattainment.
St. Clair County		Unclassifiable/Attainment.		Nonattainment.
Washtenaw County		Unclassifiable/Attainment.		Nonattainment.
Wayne County		Unclassifiable/Attainment.		Nonattainment.

Michigan—$PM_{2.5}$ [24-hour NAAQS]

Designated area	Designation for the 1997 NAAQS [a]		Designation for the 2006 NAAQS [a]	
	Date [1]	Type	Date [2]	Type
Rest of State:				
Alcona County		Unclassifiable/Attainment.		Unclassifiable/Attainment.
Alger County		Unclassifiable/Attainment.		Unclassifiable/Attainment.
Allegan County		Unclassifiable/Attainment.		Unclassifiable/Attainment.
Alpena County		Unclassifiable/Attainment.		Unclassifiable/Attainment.
Antrim County		Unclassifiable/Attainment.		Unclassifiable/Attainment.
Arenac County		Unclassifiable/Attainment.		Unclassifiable/Attainment.
Baraga County		Unclassifiable/Attainment.		Unclassifiable/Attainment.
Barry County		Unclassifiable/Attainment.		Unclassifiable/Attainment.
Bay County		Unclassifiable/Attainment.		Unclassifiable/Attainment.
Benzie County		Unclassifiable/Attainment.		Unclassifiable/Attainment.
Berrien County		Unclassifiable/Attainment.		Unclassifiable/Attainment.
Branch County		Unclassifiable/Attainment.		Unclassifiable/Attainment.
Calhoun County		Unclassifiable/Attainment.		Unclassifiable/Attainment.
Cass County		Unclassifiable/Attainment.		Unclassifiable/Attainment.
Charlevoix County		Unclassifiable/Attainment.		Unclassifiable/Attainment.
Cheboygan County		Unclassifiable/Attainment.		Unclassifiable/Attainment.
Chippewa County		Unclassifiable/Attainment.		Unclassifiable/Attainment.
Clare County		Unclassifiable/Attainment.		Unclassifiable/Attainment.
Clinton County		Unclassifiable/Attainment.		Unclassifiable/Attainment.
Crawford County		Unclassifiable/Attainment.		Unclassifiable/Attainment.
Delta County		Unclassifiable/Attainment.		Unclassifiable/Attainment.
Dickinson County		Unclassifiable/Attainment.		Unclassifiable/Attainment.
Eaton County		Unclassifiable/Attainment.		Unclassifiable/Attainment.
Emmet County		Unclassifiable/Attainment.		Unclassifiable/Attainment.
Genesee County		Unclassifiable/Attainment.		Unclassifiable/Attainment.
Gladwin County		Unclassifiable/Attainment.		Unclassifiable/Attainment.
Gogebic County		Unclassifiable/Attainment.		Unclassifiable/Attainment.
Grand Traverse County		Unclassifiable/Attainment.		Unclassifiable/Attainment.
Gratiot County		Unclassifiable/Attainment.		Unclassifiable/Attainment.
Hillsdale County		Unclassifiable/Attainment.		Unclassifiable/Attainment.
Houghton County		Unclassifiable/Attainment.		Unclassifiable/Attainment.
Huron County		Unclassifiable/Attainment.		Unclassifiable/Attainment.
Ingham County		Unclassifiable/Attainment.		Unclassifiable/Attainment.
Ionia County		Unclassifiable/Attainment.		Unclassifiable/Attainment.
Iosco County		Unclassifiable/Attainment.		Unclassifiable/Attainment.

Michigan—$PM_{2.5}$ [24-hour NAAQS]

Designated area	Designation for the 1997 NAAQS [a]		Designation for the 2006 NAAQS [a]	
	Date [1]	Type	Date [2]	Type
Iron County		Unclassifiable/Attainment.		Unclassifiable/Attainment.
Isabella County		Unclassifiable/Attainment.		Unclassifiable/Attainment.
Jackson County		Unclassifiable/Attainment.		Unclassifiable/Attainment.
Kalamazoo County		Unclassifiable/Attainment.		Unclassifiable/Attainment.
Kalkaska County		Unclassifiable/Attainment.		Unclassifiable/Attainment.
Kent County		Unclassifiable/Attainment.		Unclassifiable/Attainment.
Keweenaw County		Unclassifiable/Attainment.		Unclassifiable/Attainment.
Lake County		Unclassifiable/Attainment.		Unclassifiable/Attainment.
Lapeer County		Unclassifiable/Attainment.		Unclassifiable/Attainment.
Leelanau County		Unclassifiable/Attainment.		Unclassifiable/Attainment.
Lenawee County		Unclassifiable/Attainment.		Unclassifiable/Attainment.
Luce County		Unclassifiable/Attainment.		Unclassifiable/Attainment.
Mackinac County		Unclassifiable/Attainment.		Unclassifiable/Attainment.
Manistee County		Unclassifiable/Attainment.		Unclassifiable/Attainment.
Marquette County		Unclassifiable/Attainment.		Unclassifiable/Attainment.
Mason County		Unclassifiable/Attainment.		Unclassifiable/Attainment.
Mecosta County		Unclassifiable/Attainment.		Unclassifiable/Attainment.
Menominee County		Unclassifiable/Attainment.		Unclassifiable/Attainment.
Midland County		Unclassifiable/Attainment.		Unclassifiable/Attainment.
Missaukee County		Unclassifiable/Attainment.		Unclassifiable/Attainment.
Montcalm County		Unclassifiable/Attainment.		Unclassifiable/Attainment.
Montmorency County		Unclassifiable/Attainment.		Unclassifiable/Attainment.
Muskegon County		Unclassifiable/Attainment.		Unclassifiable/Attainment.
Newaygo County		Unclassifiable/Attainment.		Unclassifiable/Attainment.
Oceana County		Unclassifiable/Attainment.		Unclassifiable/Attainment.
Ogemaw County		Unclassifiable/Attainment.		Unclassifiable/Attainment.
Ontonagon County		Unclassifiable/Attainment.		Unclassifiable/Attainment.
Osceola County		Unclassifiable/Attainment.		Unclassifiable/Attainment.
Oscoda County		Unclassifiable/Attainment.		Unclassifiable/Attainment.
Otsego County		Unclassifiable/Attainment.		Unclassifiable/Attainment.
Ottawa County		Unclassifiable/Attainment.		Unclassifiable/Attainment.
Presque Isle County		Unclassifiable/Attainment.		Unclassifiable/Attainment.
Roscommon County		Unclassifiable/Attainment.		Unclassifiable/Attainment.
Saginaw County		Unclassifiable/Attainment.		Unclassifiable/Attainment.
St. Joseph County		Unclassifiable/Attainment.		Unclassifiable/Attainment.

Michigan—$PM_{2.5}$ [24-hour NAAQS]

Designated area	Designation for the 1997 NAAQS [a]		Designation for the 2006 NAAQS [a]	
	Date [1]	Type	Date [2]	Type
Sanilac County		Unclassifiable/Attainment.		Unclassifiable/Attainment.
Schoolcraft County		Unclassifiable/Attainment.		Unclassifiable/Attainment.
Shiawassee County		Unclassifiable/Attainment.		Unclassifiable/Attainment.
Tuscola County		Unclassifiable/Attainment.		Unclassifiable/Attainment.
Van Buren County		Unclassifiable/Attainment.		Unclassifiable/Attainment.
Wexford County		Unclassifiable/Attainment.		Unclassifiable/Attainment.

[a] Includes Indian Country located in each county or area, except as otherwise specified.
[1] This date is 90 days after January 5, 2005, unless otherwise noted.
[2] This date is 30 days after November 13, 2009, unless otherwise noted.

Michigan—2008 Lead NAAQS

Designated area	Designation for the 2008 NAAQS [a]	
	Date [1]	Type
Belding, MI:		
Ionia County (part)		Nonattainment.
The area bounded by the following coordinates: Southeast corner by latitude 43.0956705 N and longitude 85.2130771 W; southwest corner (intersection of S. Broas St. and W. Washington St.) by latitude 43.0960358 N and longitude 85.2324027 W; northeast corner by latitude 43.1074942 N and longitude 85.2132313 W; western boundary 1 (intersection of W. Ellis St. and the vertical extension of S. Broas St.) by latitude 43.1033277 N and longitude 85.2322553 W; western boundary 2 (intersection of W. Ellis St. and N. Bridge St.) by latitude 43.1033911 N and longitude 85.2278464 W; western boundary 3 (intersection of N. Bridge St. and Earle St.) by latitude 43.1074479 N and longitude 85.2279722 W.		
Rest of State		Unclassifiable/Attainment.

[a] Includes Indian Country located in each county or area, except as otherwise specified.
[1] December 31, 2011 unless otherwise noted.

[43 FR 8964, Mar. 3, 1978]

EDITORIAL NOTE: For FEDERAL REGISTER citations affecting §81.323 see the List of CFR Sections Affected, which appears in the Finding Aids section of the printed volume and at *www.fdsys.gov*.

EFFECTIVE DATE NOTE: At 77 FR 30128, May 21, 2012, §81.323 was amended by revising the table heading for ''Michigan—Ozone (8-Hour Standard)'' to read ''Michigan—1997 8-Hour Ozone NAAQS (Primary and Secondary)''; by adding a new table entitled ''Michigan—2008 8-Hour Ozone NAAQS (Primary and Secondary)'' following the newly designated table ''Michigan—1997 8-Hour Ozone NAAQS (Primary and Secondary)'', effective July 20, 2012. For the convenience of the user, the added text is set forth as follows:

§81.323 Michigan.

* * * * *

Michigan—2008 8-Hour Ozone NAAQS (Primary and secondary)

Designated area	Designation		Classification	
	Date [1]	Type	Date [1]	Type
Statewide and Any Areas of Indian Country		Unclassifiable/Attainment		

[1] This date is July 20, 2012, unless otherwise noted.

* * * * *

§ 81.324 Minnesota.

Minnesota—SO_2

Designated area	Does not meet primary standards	Does not meet secondary standards	Cannot be classified	Better than national standards
AQCR 131:				
Anoka County				X
Carver County				X
Dakota County				X
Hennepin County				X
Ramsey County				X
Scott County				X
Washington County				X
Aitkin County				X
Becker County				X
Beltrami County				X
Benton and Stearns Counties				X
Big Stone County				X
Blue Earth County				X
Brown County				X
Carlton County				X
Cass County				X
Chippewa County				X
Chisago County				X
Clay County				X
Clearwater County				X
Cook County				X
Cottonwood County				X
Crow Wing County				X
Dodge County				X
Douglas County				X
Faribault County				X
Fillmore County				X
Freeborn County				X
Goodhue County				X
Grant County				X
Houston County				X
Hubbard County				X
Isanti County				X
Itasca and Saint Louis Counties				X
Jackson County				X
Kanabec County				X
Kandiyohi County				X
Kittson County				X
Koochiching County				X
Lac qui Parle County				X
Lake County				X
Lake of the Woods County				X
Le Sueur County				X
Lincoln County				X
Lyon County				X
Mahnomen County				X
Marshall County				X
Martin County				X
McLeod County				X
Meeker County				X
Mille Lacs County				X
Morrison County				X
Mower County				X
Murray County				X
Nicollet County				X
Nobles County				X
Norman County				X
Olmsted County				X
Otter Tail County				X
Pennington County				X
Pine County				X
Pipestone County				X
Polk County				X
Pope County				X
Red Lake County				X

Minnesota—SO_2

Designated area	Does not meet primary standards	Does not meet secondary standards	Cannot be classified	Better than national standards
Redwood County				X
Renville County				X
Rice County				X
Rock County				X
Roseau County				X
Saint Louis County (see Itasca County)				X
Sherburne County			X	
Sibley County				X
Stearns (see Benton County)				X
Steele County				X
Stevens County				X
Swift County				X
Todd County				X
Traverse County				X
Wabasha County				X
Wadena County				X
Waseca County				X
Watonwan County				X
Wilkin County				X
Winona County				X
Wright County				X
Yellow Medicine County				X

Minnesota—CO

Designated area	Designation		Classification	
	Date [1]	Type	Date [1]	Type
Minneapolis-Saint Paul Area:.				
Anoka County	Nov. 29, 1999	Attainment		
Carver County (part).				
Carver, Chanhassen, Chaska, Hamburg, Norwood, Victoria, Waconia, Watertown, Young America, Chaska Township, Laketown Township, Waconia Township, Watertown Township, Young America Township.	.....do	Attainment		
Dakota County (part).				
Apple Valley, Burnsville, Eagan, Farmington, Hastings, Inver Grove Heights, Lakeville, Lilydale, Mendota, Mendota Heights, Rosemount, South St. Paul, Sunfish Lake, West St. Paul.	.....do	Attainment		
Hennepin County	.....do	Attainment		
Ramsey County	.....do	Attainment		
Scott County (part)	.....do	Attainment		
Belle Plaine, Elko, New Market, New Prague, Prior Lake, Savage, Shakopee, Credit River Township, Jackson Township, Louisville Township, New Market Township, Spring Lake Township.	.....do	Attainment		
Washington County (part).				
All cities and townships except Denmark Township.				
Wright County (part).				
Albertville, Annandale, Buffalo, Clearwater, Cokato, Delano, Hanover, Monticello, Montrose, Rockford, St. Michael, South Haven, Waverly, Dayton (Wright Co. part), Buffalo Township, Chatham Township, Clearwater Township, Cokato Township, Corrinna Township, Frankfort Township, Maple Lake Township, Franklin Township, Marysville Township, Monticello Township, Ostego Township, Rockford Township, Silver Creek Township, Southside Township.				
AQCR 131 Minneapolis-St. Paul:.				

Minnesota—CO

Designated area	Designation		Classification	
	Date [1]	Type	Date [1]	Type
Intrastate (Remainder of).				
Carver County (part).				
Remainder of County		Unclassifiable/Attainment		
Dakota County (part).				
Remainder of County		do		
Scott County (part).				
Remainder of County		do		
Washington County (part).				
Denmark Township		do		
Wright County (part).				
Remainder of County		do		
Aitkin County		do		
Becker County		do		
Beltrami County		do		
Benton County	8/27/93	Attainment		
Big Stone County		Unclassifiable/ Attainment		
Blue Earth County		do		
Brown County		do		
Carlton County		do		
Cass County		do		
Chippewa County		do		
Chisago County		do		
Clay County		do		
Clearwater County		do		
Cook County		do		
Cottonwood County		do		
Crow Wing County		do		
Dodge County		do		
Douglas County		do		
Faribault County		do		
Fillmore County		do		
Freeborn County		do		
Goodhue County		do		
Grant County		do		
Houston County		do		
Hubbard County		do		
Isanti County		do		
Itasca County		do		
Jackson County		do		
Kanabec County		do		
Kandiyohi County		do		
Kittson County		do		
Koochiching County		do		
Lac qui Parle County		do		
Lake County		do		
Lake of the Woods County		do		
Le Sueur County		do		
Lincoln County		do		
Lyon County		do		
Mahnomen County		do		
Marshall County		do		
Martin County		do		
McLeod County		do		
Meeker County		do		
Mille Lacs County		do		
Morrison County		do		
Mower County		do		
Murray County		do		
Nicollet County		do		
Nobles County		do		
Norman County		do		
Olmsted County		do		
Otter Tail County		do		
Pennington County		do		
Pine County		do		
Pipestone County		do		
Polk County		do		
Pope County		do		
Red Lake County		do		
Redwood County		do		
Renville County		do		

Minnesota—CO

Designated area	Designation		Classification	
	Date [1]	Type	Date [1]	Type
Rice County	.....	.....do		
Rock County	.....	.....do		
Roseau County	.....	.....do		
Saint Louis County.				
Duluth area.				
St. Louis County (part).				
City of Duluth	6/13/94	Attainment		
Remainder of County	.....	Unclassifiable/Attainment		
Sherburne County	8/27/93	Attainment		
Sibley County	.....	Unclassifiable/ Attainment		
Stearns County	8/27/93	Attainment		
Steele County	.....	Unclassifiable/Attainment		
Stevens County	.....	.....do		
Swift County	.....	.....do		
Todd County	.....	.....do		
Traverse County	.....	.....do		
Wabasha County	.....	.....do		
Wadena County	.....	.....do		
Waseca County	.....	.....do		
Watonwan County	.....	.....do		
Wilkin County	.....	.....do		
Winona County	.....	.....do		
Yellow Medicine County	.....	.....do		

[1] This date is November 15, 1990, unless otherwise noted.

Minnesota—Ozone (1-Hour Standard)[2]

Designated area	Designation		Classification	
	Date [1]	Type	Date [1]	Type
Minneapolis-Saint Paul Area:				
Anoka County	.....	Unclassifiable/Attainment		
Carver County	.....	Unclassifiable/Attainment		
Dakota County	.....	Unclassifiable/Attainment		
Hennepin County	.....	Unclassifiable/Attainment		
Ramsey County	.....	Unclassifiable/Attainment		
Scott County	.....	Unclassifiable/Attainment		
Washington County	.....	Unclassifiable/Attainment		
Rest of State	.....	Unclassifiable/Attainment		
Aitkin County	.....	Unclassifiable/Attainment		
Becker County	.....	Unclassifiable/Attainment		
Beltrami County	.....	Unclassifiable/Attainment		
Benton County	.....	Unclassifiable/Attainment		
Big Stone County	.....	Unclassifiable/Attainment		
Blue Earth County	.....	Unclassifiable/Attainment		
Brown County	.....	Unclassifiable/Attainment		
Carlton County	.....	Unclassifiable/Attainment		
Cass County	.....	Unclassifiable/Attainment		
Chippewa County	.....	Unclassifiable/Attainment		
Chisago County	.....	Unclassifiable/Attainment		
Clay County	.....	Unclassifiable/Attainment		
Clearwater County	.....	Unclassifiable/Attainment		
Cook County	.....	Unclassifiable/Attainment		
Cottonwood County	.....	Unclassifiable/Attainment		
Crowe County	.....	Unclassifiable/Attainment		
Dodge County	.....	Unclassifiable/Attainment		
Douglas County	.....	Unclassifiable/Attainment		
Faribault County	.....	Unclassifiable/Attainment		
Fillmore County	.....	Unclassifiable/Attainment		
Freeborn County	.....	Unclassifiable/Attainment		
Goodhue County	.....	Unclassifiable/Attainment		
Grant County	.....	Unclassifiable/Attainment		
Houston County	.....	Unclassifiable/Attainment		
Hubbard County	.....	Unclassifiable/Attainment		
Isanti County	.....	Unclassifiable/Attainment		
Itasca County	.....	Unclassifiable/Attainment		
Jackson County	.....	Unclassifiable/Attainment		
Kanabec County	.....	Unclassifiable/Attainment		
Kandiyohi County	.....	Unclassifiable/Attainment		
Kittson County	.....	Unclassifiable/Attainment		

Minnesota—Ozone (1-Hour Standard)[2]

Designated area	Designation		Classification	
	Date [1]	Type	Date [1]	Type
Koochiching County		Unclassifiable/Attainment		
Lac qui Parle County		Unclassifiable/Attainment		
Lake County		Unclassifiable/Attainment		
Lake of the Woods County		Unclassifiable/Attainment		
Le Sueur County		Unclassifiable/Attainment		
Lincon County		Unclassifiable/Attainment		
Lyon County		Unclassifiable/Attainment		
Mahnomen County		Unclassifiable/Attainment		
Marshall County		Unclassifiable/Attainment		
Martin County		Unclassifiable/Attainment		
McLeod County		Unclassifiable/Attainment		
Meeker County		Unclassifiable/Attainment		
Mille Lacs County		Unclassifiable/Attainment		
Morrison County		Unclassifiable/Attainment		
Mower County		Unclassifiable/Attainment		
Murray County		Unclassifiable/Attainment		
Nicollet County		Unclassifiable/Attainment		
Nobles County		Unclassifiable/Attainment		
Norman County		Unclassifiable/Attainment		
Olmsted County		Unclassifiable/Attainment		
Otter Tail County		Unclassifiable/Attainment		
Pennington County		Unclassifiable/Attainment		
Pine County		Unclassifiable/Attainment		
Pipestone County		Unclassifiable/Attainment		
Polk County		Unclassifiable/Attainment		
Pope County		Unclassifiable/Attainment		
Red Lake County		Unclassifiable/Attainment		
Redwood County		Unclassifiable/Attainment		
Renville County		Unclassifiable/Attainment		
Rice County		Unclassifiable/Attainment		
Rock County		Unclassifiable/Attainment		
Roseau County		Unclassifiable/Attainment		
Saint Louis County		Unclassifiable/Attainment		
Sherburne County		Unclassifiable/Attainment		
Sibley County		Unclassifiable/Attainment		
Stearns County		Unclassifiable/Attainment		
Steele County		Unclassifiable/Attainment		
Stevens County		Unclassifiable/Attainment		
Swift County		Unclassifiable/Attainment		
Todd County		Unclassifiable/Attainment		
Traverse County		Unclassifiable/Attainment		
Wabasha County		Unclassifiable/Attainment		
Wadena County		Unclassifiable/Attainment		
Waseca County		Unclassifiable/Attainment		
Watonwan County		Unclassifiable/Attainment		
Wilkin County		Unclassifiable/Attainment		
Winona County		Unclassifiable/Attainment		
Wright County		Unclassifiable/Attainment		
Yellow Medicine County		Unclassifiable/Attainment		

[1] This date is October 18, 2000, unless otherwise noted.
[2] The 1-hour ozone standard is revoked effective June 15, 2005 for all areas in Minnesota.

Minnesota—PM–10

Designated area	Designation		Classification	
	Date [1]	Type	Date [1]	Type
Minneapolis-Saint Paul Area:.				
Anoka County		Unclassifiable/ Attainment		
Carver County		.....do		
Dakota County		.....do		
Hennepin County		.....do		
Ramsey County	9/24/02	Attainment		
Scott County		Unclassifiable/Attainment		
Washington County		.....do		
Aitkin County		.....do		
Becker County		.....do		
Beltrami County		.....do		
Benton County		.....do		
Big Stone County		.....do		

Minnesota—PM–10

Designated area	Designation		Classification	
	Date [1]	Type	Date [1]	Type
Blue Earth County		do		
Brown County		do		
Carlton County		do		
Cass County		do		
Chippewa County		do		
Chisago County		do		
Clay County		do		
Clearwater County		do		
Cook County		do		
Cottonwood County		do		
Crow Wing County		do		
Dodge County		do		
Douglas County		do		
Faribault County		do		
Fillmore County		do		
Freeborn County		do		
Goodhue County		do		
Grant County		do		
Houston County		do		
Hubbard County		do		
Isanti County		do		
Itasca County		do		
Jackson County		do		
Kanabec County		do		
Kandiyohi County		do		
Kittson County		do		
Koochiching County		do		
Lac qui Parle County		do		
Lake County		do		
Lake of the Woods County		do		
Le Sueur County		do		
Lincoln County		do		
Lyon County		do		
Mahnomen County		do		
Marshall County		do		
Martin County		do		
McLeod County		do		
Meeker County		do		
Mille Lacs County		do		
Morrison County		do		
Mower County		do		
Murray County		do		
Nicollet County		do		
Nobles County		do		
Norman County		do		
Olmsted County	6/31/95	Attainment		
Otter Tail County		do		
Pennington County		do		
Pine County		do		
Pipestone County		do		
Polk County		do		
Pope County		do		
Red Lake County		do		
Redwood County		do		
Renville County		do		
Rice County		do		
Rock County		do		
Roseau County		do		
Saint Louis County		do		
Sherburne County		do		
Sibley County		do		
Stearns County		do		
Steele County		do		
Stevens County		do		
Swift County		do		
Todd County		do		
Traverse County		do		
Wabasha County		do		
Wadena County		do		
Waseca County		do		
Watonwan County		do		

Minnesota—PM–10

Designated area	Designation		Classification	
	Date [1]	Type	Date [1]	Type
Wilkin County		do		
Winona County		do		
Wright County		do		
Yellow Medicine County		do		

[1] This date is November 15, 1990, unless otherwise noted.

Minnesota—NO_2 (1971 Annual Standard)

Designated area	Does not meet primary standards	Cannot be classified or better than national standards
AQCR 131:.		
Anoka County		X
Carver County		X
Dakota County		X
Hennepin County		X
Ramsey County		X
Scott County		X
Washington County		X
Aitkin County		X
Becker County		X
Beltrami County		X
Benton County		X
Big Stone County		X
Blue Earth County		X
Brown County		X
Carlton County		X
Cass County		X
Chippewa County		X
Chisago County		X
Clay County		X
Clearwater County		X
Cook County		X
Cottonwood County		X
Crow Wing County		X
Dodge County		X
Douglas County		X
Faribault County		X
Fillmore County		X
Freeborn County		X
Goodhue County		X
Grant County		X
Houston County		X
Hubbard County		X
Isanti County		X
Itasca County		X
Jackson County		X
Kanabec County		X
Kandiyohi County		X
Kittson County		X
Koochiching County		X
Lac qui Parle County		X
Lake County		X
Lake of the Woods County		X
Le Sueur County		X
Lincoln County		X
Lyon County		X
Mahnomen County		X
Marshall County		X
Martin County		X
McLeod County		X
Meeker County		X
Mille Lacs County		X
Morrison County		X
Mower County		X
Murray County		X
Nicollet County		X
Nobles County		X
Norman County		X

Minnesota—NO_2 (1971 Annual Standard)

Designated area	Does not meet primary standards	Cannot be classified or better than national standards
Olmsted		X
Otter Tail County		X
Pennington County		X
Pine County		X
Pipestone County		X
Polk County		X
Pope County		X
Red Lake County		X
Redwood County		X
Renville County		X
Rice County		X
Rock County		X
Roseau County		X
Saint Louis County		X
Sherburne County		X
Sibley County		X
Stearns County		X
Steele County		X
Stevens County		X
Swift County		X
Todd County		X
Traverse County		X
Wabasha County		X
Wadena County		X
Waseca County		X
Watonwan County		X
Wilkin County		X
Winona County		X
Wright County		X
Yellow Medicine County		X

Minnesota—NO_2 (2010 1-Hour Standard)

Designated area	Designation [a]	
	Date [1]	Type
State of Minnesota		Unclassifiable/Attainment.

[a] Includes Indian Country located in each county or area, except as otherwise specified.
[1] This date is 90 days after October 31, 2011, unless otherwise noted.

Minnesota—Ozone (8-Hour Standard)

Designated area	Designation [a]		Category/classification	
	Date [1]	Type	Date [1]	Type
Minneapolis-Saint Paul Area:				
Anoka County		Unclassifiable/Attainment		
Carver County		Unclassifiable/Attainment		
Dakota County		Unclassifiable/Attainment		
Hennepin County		Unclassifiable/Attainment		
Ramsey County		Unclassifiable/Attainment		
Scott County		Unclassifiable/Attainment		
Washington County		Unclassifiable/Attainment		
Rest of State		Unclassifiable/Attainment		
Aitkin County		Unclassifiable/Attainment		
Becker County		Unclassifiable/Attainment		
Beltrami County		Unclassifiable/Attainment		
Benton County		Unclassifiable/Attainment		
Big Stone County		Unclassifiable/Attainment		
Blue Earth County		Unclassifiable/Attainment		
Brown County		Unclassifiable/Attainment		
Carlton County		Unclassifiable/Attainment		
Cass County		Unclassifiable/Attainment		
Chippewa County		Unclassifiable/Attainment		
Chisago County		Unclassifiable/Attainment		
Clay County		Unclassifiable/Attainment		
Clearwater County		Unclassifiable/Attainment		
Cook County		Unclassifiable/Attainment		
Cottonwood County		Unclassifiable/Attainment		

Minnesota—Ozone (8-Hour Standard)

Designated area	Designation [a]		Category/classification	
	Date [1]	Type	Date [1]	Type
Crow Wing County		Unclassifiable/Attainment		
Dodge County		Unclassifiable/Attainment		
Douglas County		Unclassifiable/Attainment		
Faribault County		Unclassifiable/Attainment		
Fillmore County		Unclassifiable/Attainment		
Freeborn County		Unclassifiable/Attainment		
Goodhue County		Unclassifiable/Attainment		
Grant County		Unclassifiable/Attainment		
Houston County		Unclassifiable/Attainment		
Hubbard County		Unclassifiable/Attainment		
Isanti County		Unclassifiable/Attainment		
Itasca County		Unclassifiable/Attainment		
Jackson County		Unclassifiable/Attainment		
Kanabec County		Unclassifiable/Attainment		
Kandiyohi County		Unclassifiable/Attainment		
Kittson County		Unclassifiable/Attainment		
Koochiching County		Unclassifiable/Attainment		
Lac qui Parle County		Unclassifiable/Attainment		
Lake County		Unclassifiable/Attainment		
Lake of the Woods County		Unclassifiable/Attainment		
Le Sueur County		Unclassifiable/Attainment		
Lincoln County		Unclassifiable/Attainment		
Lyon County		Unclassifiable/Attainment		
Mahnomen County		Unclassifiable/Attainment		
Marshall County		Unclassifiable/Attainment		
Martin County		Unclassifiable/Attainment		
McLeod County		Unclassifiable/Attainment		
Meeker County		Unclassifiable/Attainment		
Mille Lacs County		Unclassifiable/Attainment		
Morrison County		Unclassifiable/Attainment		
Mower County		Unclassifiable/Attainment		
Murray County		Unclassifiable/Attainment		
Nicollet County		Unclassifiable/Attainment		
Nobles County		Unclassifiable/Attainment		
Norman County		Unclassifiable/Attainment		
Olmsted County		Unclassifiable/Attainment		
Otter Tail County		Unclassifiable/Attainment		
Pennington County		Unclassifiable/Attainment		
Pine County		Unclassifiable/Attainment		
Pipestone County		Unclassifiable/Attainment		
Polk County		Unclassifiable/Attainment		
Pope County		Unclassifiable/Attainment		
Red Lake County		Unclassifiable/Attainment		
Redwood County		Unclassifiable/Attainment		
Renville County		Unclassifiable/Attainment		
Rice County		Unclassifiable/Attainment		
Rock County		Unclassifiable/Attainment		
Roseau County		Unclassifiable/Attainment		
St. Louis County		Unclassifiable/Attainment		
Sherburne County		Unclassifiable/Attainment		
Sibley County		Unclassifiable/Attainment		
Stearns County		Unclassifiable/Attainment		
Steele County		Unclassifiable/Attainment		
Stevens County		Unclassifiable/Attainment		
Swift County		Unclassifiable/Attainment		
Todd County		Unclassifiable/Attainment		
Traverse County		Unclassifiable/Attainment		
Wabasha County		Unclassifiable/Attainment		
Wadena County		Unclassifiable/Attainment		
Waseca County		Unclassifiable/Attainment		
Watonwan County		Unclassifiable/Attainment		
Wilkin County		Unclassifiable/Attainment		
Winona County		Unclassifiable/Attainment		
Wright County		Unclassifiable/Attainment		
Yellow Medicine County		Unclassifiable/Attainment		

[a] Includes Indian Country located in each county or area, except as otherwise specified.
[1] This date is June 15, 2004, unless otherwise noted.

Minnesota—$PM_{2.5}$ (Annual NAAQS)

Designated area	Designation [a]	
	Date [1]	Type
Statewide:		
Aitkin County		Unclassifiable/Attainment.
Anoka County		Unclassifiable/Attainment.
Becker County		Unclassifiable/Attainment.
Beltrami County		Unclassifiable/Attainment.
Benton County		Unclassifiable/Attainment.
Big Stone County		Unclassifiable/Attainment.
Blue Earth County		Unclassifiable/Attainment.
Brown County		Unclassifiable/Attainment.
Carlton County		Unclassifiable/Attainment.
Carver County		Unclassifiable/Attainment.
Cass County		Unclassifiable/Attainment.
Chippewa County		Unclassifiable/Attainment.
Chisago County		Unclassifiable/Attainment.
Clay County		Unclassifiable/Attainment.
Clearwater County		Unclassifiable/Attainment.
Cook County		Unclassifiable/Attainment.
Cottonwood County		Unclassifiable/Attainment.
Crow Wing County		Unclassifiable/Attainment.
Dakota County		Unclassifiable/Attainment.
Dodge County		Unclassifiable/Attainment.
Douglas County		Unclassifiable/Attainment.
Faribault County		Unclassifiable/Attainment.
Fillmore County		Unclassifiable/Attainment.
Freeborn County		Unclassifiable/Attainment.
Goodhue County		Unclassifiable/Attainment.
Grant County		Unclassifiable/Attainment.
Hennepin County		Unclassifiable/Attainment.
Houston County		Unclassifiable/Attainment.
Hubbard County		Unclassifiable/Attainment.
Isanti County		Unclassifiable/Attainment.
Itasca County		Unclassifiable/Attainment.
Jackson County		Unclassifiable/Attainment.
Kanabec County		Unclassifiable/Attainment.
Kandiyohi County		Unclassifiable/Attainment.
Kittson County		Unclassifiable/Attainment.
Koochiching County		Unclassifiable/Attainment.
Lac qui Parle County		Unclassifiable/Attainment.
Lake County		Unclassifiable/Attainment.
Lake of the Woods County		Unclassifiable/Attainment.
Le Sueur County		Unclassifiable/Attainment.
Lincoln County		Unclassifiable/Attainment.
Lyon County		Unclassifiable/Attainment.
McLeod County		Unclassifiable/Attainment.
Mahnomen County		Unclassifiable/Attainment.
Marshall County		Unclassifiable/Attainment.
Martin County		Unclassifiable/Attainment.
Meeker County		Unclassifiable/Attainment.
Mille Lacs County		Unclassifiable/Attainment.
Morrison County		Unclassifiable/Attainment.
Mower County		Unclassifiable/Attainment.
Murray County		Unclassifiable/Attainment.
Nicollet County		Unclassifiable/Attainment.
Nobles County		Unclassifiable/Attainment.
Norman County		Unclassifiable/Attainment.
Olmsted County		Unclassifiable/Attainment.
Otter Tail County		Unclassifiable/Attainment.
Pennington County		Unclassifiable/Attainment.
Pine County		Unclassifiable/Attainment.
Pipestone County		Unclassifiable/Attainment.
Polk County		Unclassifiable/Attainment.
Pope County		Unclassifiable/Attainment.
Ramsey County		Unclassifiable/Attainment.
Red Lake County		Unclassifiable/Attainment.
Redwood County		Unclassifiable/Attainment.
Renville County		Unclassifiable/Attainment.
Rice County		Unclassifiable/Attainment.
Rock County		Unclassifiable/Attainment.
Roseau County		Unclassifiable/Attainment.
St. Louis County		Unclassifiable/Attainment.
Scott County		Unclassifiable/Attainment.

Minnesota—$PM_{2.5}$ (Annual NAAQS)

Designated area	Designation [a]	
	Date [1]	Type
Sherburne County		Unclassifiable/Attainment.
Sibley County		Unclassifiable/Attainment.
Stearns County		Unclassifiable/Attainment.
Steele County		Unclassifiable/Attainment.
Stevens County		Unclassifiable/Attainment.
Swift County		Unclassifiable/Attainment.
Todd County		Unclassifiable/Attainment.
Traverse County		Unclassifiable/Attainment.
Wabasha County		Unclassifiable/Attainment.
Wadena County		Unclassifiable/Attainment.
Waseca County		Unclassifiable/Attainment.
Washington County		Unclassifiable/Attainment.
Watonwan County		Unclassifiable/Attainment.
Wilkin County		Unclassifiable/Attainment.
Winona County		Unclassifiable/Attainment.
Wright County		Unclassifiable/Attainment.
Yellow Medicine County		Unclassifiable/Attainment.

[a] Includes Indian Country located in each county or area, except as otherwise specified.
[1] This date is 90 days after January 5, 2005, unless otherwise noted.

Minnesota—$PM_{2.5}$ [24-hour NAAQS]

Designated area	Designation for the 1997 NAAQS [a]		Designation for the 2006 NAAQS [a]	
	Date [1]	Type	Date [2]	Type
Statewide:				
Aitkin County		Unclassifiable/Attainment.		Unclassifiable/Attainment.
Anoka County		Unclassifiable/Attainment.		Unclassifiable/Attainment.
Becker County		Unclassifiable/Attainment.		Unclassifiable/Attainment.
Beltrami County		Unclassifiable/Attainment.		Unclassifiable/Attainment.
Benton County		Unclassifiable/Attainment.		Unclassifiable/Attainment.
Big Stone County		Unclassifiable/Attainment.		Unclassifiable/Attainment.
Blue Earth County		Unclassifiable/Attainment.		Unclassifiable/Attainment.
Brown County		Unclassifiable/Attainment.		Unclassifiable/Attainment.
Carlton County		Unclassifiable/Attainment.		Unclassifiable/Attainment.
Carver County		Unclassifiable/Attainment.		Unclassifiable/Attainment.
Cass County		Unclassifiable/Attainment.		Unclassifiable/Attainment.
Chippewa County		Unclassifiable/Attainment.		Unclassifiable/Attainment.
Chisago County		Unclassifiable/Attainment.		Unclassifiable/Attainment.
Clay County		Unclassifiable/Attainment.		Unclassifiable/Attainment.
Clearwater County		Unclassifiable/Attainment.		Unclassifiable/Attainment.
Cook County		Unclassifiable/Attainment.		Unclassifiable/Attainment.
Cottonwood County		Unclassifiable/Attainment.		Unclassifiable/Attainment.
Crow Wing County		Unclassifiable/Attainment.		Unclassifiable/Attainment.
Dakota County		Unclassifiable/Attainment.		Unclassifiable/Attainment.
Dodge County		Unclassifiable/Attainment.		Unclassifiable/Attainment.
Douglas County		Unclassifiable/Attainment.		Unclassifiable/Attainment.
Faribault County		Unclassifiable/Attainment.		Unclassifiable/Attainment.

Minnesota—$PM_{2.5}$ [24-hour NAAQS]

Designated area	Designation for the 1997 NAAQS [a]		Designation for the 2006 NAAQS [a]	
	Date [1]	Type	Date [2]	Type
Fillmore County		Unclassifiable/Attainment.		Unclassifiable/Attainment.
Freeborn County		Unclassifiable/Attainment.		Unclassifiable/Attainment.
Goodhue County		Unclassifiable/Attainment.		Unclassifiable/Attainment.
Grant County		Unclassifiable/Attainment.		Unclassifiable/Attainment.
Hennepin County		Unclassifiable/Attainment.		Unclassifiable/Attainment.
Houston County		Unclassifiable/Attainment.		Unclassifiable/Attainment.
Hubbard County		Unclassifiable/Attainment.		Unclassifiable/Attainment.
Isanti County		Unclassifiable/Attainment.		Unclassifiable/Attainment.
Itasca County		Unclassifiable/Attainment.		Unclassifiable/Attainment.
Jackson County		Unclassifiable/Attainment.		Unclassifiable/Attainment.
Kanabec County		Unclassifiable/Attainment.		Unclassifiable/Attainment.
Kandiyohi County		Unclassifiable/Attainment.		Unclassifiable/Attainment.
Kittson County		Unclassifiable/Attainment.		Unclassifiable/Attainment.
Koochiching County		Unclassifiable/Attainment.		Unclassifiable/Attainment.
Lac qui Parle County		Unclassifiable/Attainment.		Unclassifiable/Attainment.
Lake County		Unclassifiable/Attainment.		Unclassifiable/Attainment.
Lake of the Woods County		Unclassifiable/Attainment.		Unclassifiable/Attainment.
Le Sueur County		Unclassifiable/Attainment.		Unclassifiable/Attainment.
Lincoln County		Unclassifiable/Attainment.		Unclassifiable/Attainment.
Lyon County		Unclassifiable/Attainment.		Unclassifiable/Attainment.
McLeod County		Unclassifiable/Attainment.		Unclassifiable/Attainment.
Mahnomen County		Unclassifiable/Attainment.		Unclassifiable/Attainment.
Marshall County		Unclassifiable/Attainment.		Unclassifiable/Attainment.
Martin County		Unclassifiable/Attainment.		Unclassifiable/Attainment.
Meeker County		Unclassifiable/Attainment.		Unclassifiable/Attainment.
Mille Lacs County		Unclassifiable/Attainment.		Unclassifiable/Attainment.
Morrison County		Unclassifiable/Attainment.		Unclassifiable/Attainment.
Mower County		Unclassifiable/Attainment.		Unclassifiable/Attainment.
Murray County		Unclassifiable/Attainment.		Unclassifiable/Attainment.
Nicollet County		Unclassifiable/Attainment.		Unclassifiable/Attainment.
Nobles County		Unclassifiable/Attainment.		Unclassifiable/Attainment.
Norman County		Unclassifiable/Attainment.		Unclassifiable/Attainment.
Olmsted County		Unclassifiable/Attainment.		Unclassifiable/Attainment.
Otter Tail County		Unclassifiable/Attainment.		Unclassifiable/Attainment.
Pennington County		Unclassifiable/Attainment.		Unclassifiable/Attainment.

Minnesota—$PM_{2.5}$ [24-hour NAAQS]

Designated area	Designation for the 1997 NAAQS [a]		Designation for the 2006 NAAQS [a]	
	Date [1]	Type	Date [2]	Type
Pine County		Unclassifiable/Attainment.		Unclassifiable/Attainment.
Pipestone County		Unclassifiable/Attainment.		Unclassifiable/Attainment.
Polk County		Unclassifiable/Attainment.		Unclassifiable/Attainment.
Pope County		Unclassifiable/Attainment.		Unclassifiable/Attainment.
Ramsey County		Unclassifiable/Attainment.		Unclassifiable/Attainment.
Red Lake County		Unclassifiable/Attainment.		Unclassifiable/Attainment.
Redwood County		Unclassifiable/Attainment.		Unclassifiable/Attainment.
Renville County		Unclassifiable/Attainment.		Unclassifiable/Attainment.
Rice County		Unclassifiable/Attainment.		Unclassifiable/Attainment.
Rock County		Unclassifiable/Attainment.		Unclassifiable/Attainment.
Roseau County		Unclassifiable/Attainment.		Unclassifiable/Attainment.
St. Louis County		Unclassifiable/Attainment.		Unclassifiable/Attainment.
Scott County		Unclassifiable/Attainment.		Unclassifiable/Attainment.
Sherburne County		Unclassifiable/Attainment.		Unclassifiable/Attainment.
Sibley County		Unclassifiable/Attainment.		Unclassifiable/Attainment.
Stearns County		Unclassifiable/Attainment.		Unclassifiable/Attainment.
Steele County		Unclassifiable/Attainment.		Unclassifiable/Attainment.
Stevens County		Unclassifiable/Attainment.		Unclassifiable/Attainment.
Swift County		Unclassifiable/Attainment.		Unclassifiable/Attainment.
Todd County		Unclassifiable/Attainment.		Unclassifiable/Attainment.
Traverse County		Unclassifiable/Attainment.		Unclassifiable/Attainment.
Wabasha County		Unclassifiable/Attainment.		Unclassifiable/Attainment.
Wadena County		Unclassifiable/Attainment.		Unclassifiable/Attainment.
Waseca County		Unclassifiable/Attainment.		Unclassifiable/Attainment.
Washington County		Unclassifiable/Attainment.		Unclassifiable/Attainment.
Watonwan County		Unclassifiable/Attainment.		Unclassifiable/Attainment.
Wilkin County		Unclassifiable/Attainment.		Unclassifiable/Attainment.
Winona County		Unclassifiable/Attainment.		Unclassifiable/Attainment.
Wright County		Unclassifiable/Attainment.		Unclassifiable/Attainment.
Yellow Medicine County		Unclassifiable/Attainment.		Unclassifiable/Attainment.

[a] Includes Indian Country located in each county or area, except as otherwise specified.
[1] This date is 90 days after January 5, 2005, unless otherwise noted.
[2] This date is 30 days after November 13, 2009, unless otherwise noted.

Minnesota—1978 Lead NAAQS

Designated area	Designation		Classification	
	Date	Type	Date	Type
Dakota County Rest of State not designated.	12/19/94	Attainment.		

Minnesota—2008 Lead NAAQS

Designated area	Designation for the 2008 NAAQS [a]	
	Date [1]	Type
Eagan, MN: Dakota County (part) Portions of Dakota County that are bounded by: Lone Oak Rd. (County Rd. 26) to the north, County Rd. 63 to the east, Wescott Rd. to the south, and Lexington Ave. (County Rd. 43) to the west.	12/31/10	Nonattainment.
Rest of State		Unclassifiable/Attainment.

[a] Includes Indian Country located in each county or area, except as otherwise specified.
[1] December 31, 2011 unless otherwise noted.

[58 FR 50277, Sept. 27, 1993 as amended at 58 FR 60495, Nov. 16, 1993; 59 FR 17709, Apr. 14, 1994; 59 FR 52436, Oct. 18, 1994; 60 FR 28343, May 31, 1995; 60 FR 34461, July 3, 1995; 62 FR 26235, May 13, 1997; 63 FR 31056, June 5, 1998; 64 FR 58354, Oct. 29, 1999; 65 FR 45236, July 20, 2000; 66 FR 14091, Mar. 9, 2001; 67 FR 45639, July 10, 2002; 67 FR 48790, July 26, 2002; 69 FR 23912, Apr. 30, 2004; 70 FR 981, Jan. 5, 2005; 70 FR 44476, Aug. 3, 2005; 74 FR 58739, Nov. 13, 2009; 75 FR 71042, Nov. 22, 2010; 76 FR 72111, Nov. 22, 2011; 77 FR 9562, Feb. 17, 2012]

EFFECTIVE DATE NOTE: At 77 FR 30129, May 21, 2012, § 81.324 was amended by revising the table heading for ''Minnesota—Ozone (8-Hour Standard)'' to read ''Minnesota—1997 8-Hour Ozone NAAQS (Primary and Secondary)''; by adding a new table entitled ''Minnesota—2008 8-Hour Ozone NAAQS (Primary and Secondary)'' following the newly designated table ''Minnesota—1997 8-Hour Ozone NAAQS (Primary and Secondary)'', effective July 20, 2012. For the convenience of the user, the added text is set forth as follows:

§ 81.324 Minnesota.

* * * * *

Minnesota—2008 8-Hour Ozone NAAQS (Primary and secondary)

Designated area	Designation		Classification	
	Date [1]	Type	Date [1]	Type
Statewide and Any Areas of Indian Country		Unclassifiable/Attainment		

[1] This date is July 20, 2012, unless otherwise noted.

* * * * *

§ 81.325 Mississippi.

Mississippi—TSP

Designated area	Does not meet primary standards	Does not meet secondary standards	Cannot be classified	Better than national standards
Adams County				X
Alcorn County				X
Amite County				X
Attala County				X
Benton County				X
Bolivar County				X
Calhoun County				X
Carroll County				X
Chickasaw County				X
Choctaw County				X
Clairborne County				X
Clarke County				X

Mississippi—TSP

Designated area	Does not meet primary standards	Does not meet secondary standards	Cannot be classified	Better than national standards
Clay County				X
Coahoma County				X
Copiah County				X
Covington County				X
DeSoto County				X
Forrest County				X
Franklin County				X
George County				X
Greene County				X
Grenada County				X
Hancock County				X
Harrison County				X
Hinds County				X
Holmes County				X
Humphreys County				X
Issaquena County				X
Ittawamba County				X
Jackson County				X
Jasper County				X
Jefferson County				X
Jefferson Davis County				X
Jones County				X
Kemper County				X
Lafayette County				X
Lamar County				X
Lauderdale County				X
Lawerence County				X
Leake County				X
Lee County				X
Leflore County				X
Lincoln County				X
Lowndes County				X
Madison County				X
Marion County				X
Marshall County				X
Monroe County				X
Montgomery County				X
Neshoba County				X
Newton County				X
Noxubee County				X
Oktibbeha County				X
Panola County				X
Pearl River County				X
Perry County				X
Pike County				X
Pontotoc County				X
Prentiss County				X
Quitman County				X
Rankin County				X
Scott County				X
Sharkey County				X
Simpson County				X
Smith County				X
Stone County				X
Sunflower County				X
Tallahatchie County				X
Tate County				X
Tippah County				X
Tishomingo County				X
Tunica County				X
Union County				X
Walthall County				X
Warren County				X
Washington County				X
Wayne County				X
Webster County				X
Wilkinson County				X
Winston County				X
Yalobusha County				X
Yazoo County				X

Mississippi—SO_2

Designated area	Does not meet primary standards	Does not meet secondary standards	Cannot be classified	Better than national standards
Adams County				X
Alcorn County				X
Amite County				X
Attala County				X
Benton County				X
Bolivar County				X
Calhoun County				X
Carroll County				X
Chickasaw County				X
Choctaw County				X
Clairborne County				X
Clarke County				X
Clay County				X
Coahoma County				X
Copiah County				X
Covington County				X
DeSoto County				X
Forest County				X
Franklin County				X
George County				X
Greene County				X
Grenada County				X
Hancock County				X
Harrison County				X
Hinds County				X
Holmes County				X
Humphreys County				X
Issaquena County				X
Ittawamba County				X
Jackson County				X
Jasper County				X
Jefferson County				X
Jefferson Davis County				X
Jones County				X
Kemper County				X
Lafayette County				X
Lamar County				X
Lauderdale County				X
Lawrence County				X
Leake County				X
Lee County				X
Leflore County				X
Lincoln County				X
Lowndes County				X
Madison County				X
Marion County				X
Marshall County				X
Monroe County				X
Montgomery County				X
Neshoba County				X
Newton County				X
Noxubee County				X
Oktibbeha County				X
Panola County				X
Pearl River County				X
Perry County				X
Pike County				X
Pontotoc County				X
Prentiss County				X
Quitman County				X
Rankin County				X
Scott County				X
Sharkey County				X
Simpson County				X
Smith County				X
Stone County				X
Sunflower County				X
Tallahatchie County				X
Tate County				X
Tippah County				X

Mississippi—SO_2

Designated area	Does not meet primary standards	Does not meet secondary standards	Cannot be classified	Better than national standards
Tishomingo County				X
Tunica County				X
Union County				X
Walthall County				X
Warren County				X
Washington County				X
Wayne County				X
Webster County				X
Wilkinson County				X
Winston County				X
Yalobusha County				X
Yazoo County				X

Mississippi—Carbon Monoxide

Designated Area	Designation		Classification	
	Date [1]	Type	Date [1]	Type
Statewide		Unclassifiable/Attainment		
Adams County				
Alcorn County				
Amite County				
Attala County				
Benton County				
Bolivar County				
Calhoun County				
Carroll County				
Chickasaw County				
Choctaw County				
Claiborne County				
Clarke County				
Clay County				
Coahoma County				
Copiah County				
Covington County				
DeSoto County				
Forrest County				
Franklin County				
George County				
Greene County				
Grenada County				
Hancock County				
Harrison County				
Hinds County				
Holmes County				
Humphreys County				
Issaquena County				
Itawamba County				
Jackson County				
Jasper County				
Jefferson County				
Jefferson Davis County				
Jones County				
Kemper County				
Lafayette County				
Lamar County				
Lauderdale County				
Lawrence County				
Leake County				
Lee County				
Leflore County				
Lincoln County				
Lowndes County				
Madison County				
Marion County				
Marshall County				
Monroe County				
Montgomery County				
Neshoba County				

Mississippi—Carbon Monoxide

Designated Area	Designation		Classification	
	Date [1]	Type	Date [1]	Type
Newton County				
Noxubee County				
Oktibbeha County				
Panola County				
Pearl River County				
Perry County				
Pike County				
Pontotoc County				
Prentiss County				
Quitman County				
Rankin County				
Scott County				
Sharkey County				
Simpson County				
Smith County				
Stone County				
Sunflower County				
Tallahatchie County				
Tate County				
Tippah County				
Tishomingo County				
Tunica County				
Union County				
Walthall County				
Warren County				
Washington County				
Wayne County				
Webster County				
Wilkinson County				
Winston County				
Yalobusha County				
Yazoo County				

[1] This date is November 15, 1990, unless otherwise noted.

Mississippi—Ozone (1-Hour Standard)[2]

Designated area	Designation		Classification	
	Date [1]	Type	Date [1]	Type
Memphis:				
De Soto County	11/15/90	Unclassifiable/Attainment	11/15/90	
Statewide	.....	Unclassifiable/Attainment		
Adams County				
Alcorn County				
Amite County				
Attala County				
Benton County				
Bolivar County				
Calhoun County				
Carroll County				
Chickasaw County				
Choctaw County				
Claiborne County				
Clarke County				
Clay County				
Coahoma County				
Copiah County				
Covington County				
Forrest County				
Franklin County				
George County				
Greene County				
Grenada County				
Hancock County				
Harrison County				
Hinds County				
Holmes County				
Humphreys County				
Issaquena County				
Itawamba County				

Mississippi—Ozone (1-Hour Standard)[2]

Designated area	Designation		Classification	
	Date [1]	Type	Date [1]	Type
Jackson County				
Jasper County				
Jefferson County				
Jefferson Davis County				
Jones County				
Kemper County				
Lafayette County				
Lamar County				
Lauderdale County				
Lawrence County				
Leake County				
Lee County				
Leflore County				
Lincoln County				
Lowndes County				
Madison County				
Marion County				
Marshall County				
Monroe County				
Montgomery County				
Neshoba County				
Newton County				
Noxubee County				
Oktibbeha County				
Panola County				
Pearl River County				
Perry County				
Pike County				
Pontotoc County				
Prentiss County				
Quitman County				
Rankin County				
Scott County				
Sharkey County				
Simpson County				
Smith County				
Stone County				
Sunflower County				
Tallahatchie County				
Tate County				
Tippah County				
Tishomingo County				
Tunica County				
Union County				
Walthall County				
Warren County				
Washington County				
Wayne County				
Webster County				
Wilkinson County				
Winston County				
Yalobusha County				
Yazoo County				

[1] This date is October 18, 2000, unless otherwise noted.
[2] The 1-hour ozone standard is revoked effective June 15, 2005 for all areas in Mississippi.

Mississippi—NO_2 (1971 Annual Standard)

Designated area	Does not meet primary standards	Cannot be classified or better than national standards
Statewide		X

Mississippi—NO_2 (2010 1-Hour Standard)

Designated area	Designation [a]	
	Date [1]	Type
Adams County		Unclassifiable/Attainment.

Mississippi—NO_2 (2010 1-Hour Standard)

Designated area	Designation [a]	
	Date [1]	Type
Alcorn County		Unclassifiable/Attainment.
Amite County		Unclassifiable/Attainment.
Attala County		Unclassifiable/Attainment.
Benton County		Unclassifiable/Attainment.
Bolivar County		Unclassifiable/Attainment.
Calhoun County		Unclassifiable/Attainment.
Carroll County		Unclassifiable/Attainment.
Chickasaw County		Unclassifiable/Attainment.
Choctaw County		Unclassifiable/Attainment.
Claiborne County		Unclassifiable/Attainment.
Clarke County		Unclassifiable/Attainment.
Clay County		Unclassifiable/Attainment.
Coahoma County		Unclassifiable/Attainment.
Copiah County		Unclassifiable/Attainment.
Covington County		Unclassifiable/Attainment.
DeSoto County		Unclassifiable/Attainment.
Forrest County		Unclassifiable/Attainment.
Franklin County		Unclassifiable/Attainment.
George County		Unclassifiable/Attainment.
Greene County		Unclassifiable/Attainment.
Grenada County		Unclassifiable/Attainment.
Hancock County		Unclassifiable/Attainment.
Harrison County		Unclassifiable/Attainment.
Hinds County		Unclassifiable/Attainment.
Holmes County		Unclassifiable/Attainment.
Humphreys County		Unclassifiable/Attainment.
Issaquena County		Unclassifiable/Attainment.
Itawamba County		Unclassifiable/Attainment.
Jackson County		Unclassifiable/Attainment.
Jasper County		Unclassifiable/Attainment.
Jefferson County		Unclassifiable/Attainment.
Jefferson Davis County		Unclassifiable/Attainment.
Jones County		Unclassifiable/Attainment.
Kemper County		Unclassifiable/Attainment.
Lafayette County		Unclassifiable/Attainment.
Lamar County		Unclassifiable/Attainment.
Lauderdale County		Unclassifiable/Attainment.
Lawrence County		Unclassifiable/Attainment.
Leake County		Unclassifiable/Attainment.
Lee County		Unclassifiable/Attainment.
Leflore County		Unclassifiable/Attainment.
Lincoln County		Unclassifiable/Attainment.
Lowndes County		Unclassifiable/Attainment.
Madison County		Unclassifiable/Attainment.
Marion County		Unclassifiable/Attainment.
Marshall County		Unclassifiable/Attainment.
Monroe County		Unclassifiable/Attainment.
Montgomery County		Unclassifiable/Attainment.
Neshoba County		Unclassifiable/Attainment.
Newton County		Unclassifiable/Attainment.
Noxubee County		Unclassifiable/Attainment.
Oktibbeha County		Unclassifiable/Attainment.
Panola County		Unclassifiable/Attainment.
Pearl River County		Unclassifiable/Attainment.
Perry County		Unclassifiable/Attainment.
Pike County		Unclassifiable/Attainment.
Pontotoc County		Unclassifiable/Attainment.
Prentiss County		Unclassifiable/Attainment.
Quitman County		Unclassifiable/Attainment.
Rankin County		Unclassifiable/Attainment.
Scott County		Unclassifiable/Attainment.
Sharkey County		Unclassifiable/Attainment.
Simpson County		Unclassifiable/Attainment.
Smith County		Unclassifiable/Attainment.
Stone County		Unclassifiable/Attainment.
Sunflower County		Unclassifiable/Attainment.
Tallahatchie County		Unclassifiable/Attainment.
Tate County		Unclassifiable/Attainment.
Tippah County		Unclassifiable/Attainment.
Tishomingo County		Unclassifiable/Attainment.
Tunica County		Unclassifiable/Attainment.

Mississippi—NO_2 (2010 1-Hour Standard)

Designated area	Designation [a]	
	Date [1]	Type
Union County		Unclassifiable/Attainment.
Walthall County		Unclassifiable/Attainment.
Warren County		Unclassifiable/Attainment.
Washington County		Unclassifiable/Attainment.
Wayne County		Unclassifiable/Attainment.
Webster County		Unclassifiable/Attainment.
Wilkinson County		Unclassifiable/Attainment.
Winston County		Unclassifiable/Attainment.
Yalobusha County		Unclassifiable/Attainment.
Yazoo County		Unclassifiable/Attainment.

[a] Includes Indian Country located in each county or area, except as otherwise specified.
[1] This date is 90 days after October 31, 2011, unless otherwise noted.

Mississippi—Ozone (8-Hour Standard)

Designated area	Designation [a]		Category/classification	
	Date [1]	Type	Date [1]	Type
Statewide		Unclassifiable/Attainment.		
Adams County				
Alcorn County				
Amite County				
Attala County				
Benton County				
Bolivar County				
Calhoun County				
Carroll County				
Chickasaw County				
Choctaw County				
Claiborne County				
Clarke County				
Clay County				
Coahoma County				
Copiah County				
Covington County				
DeSoto County				
Forrest County				
Franklin County				
George County				
Greene County				
Grenada County				
Hancock County				
Harrison County				
Hinds County				
Holmes County				
Humphreys County				
Issaquena County				
Itawamba County				
Jackson County				
Jasper County				
Jefferson County				
Jefferson Davis County				
Jones County				
Kemper County				
Lafayette County				
Lamar County				
Lauderdale County				
Lawrence County				
Leake County				
Lee County				
Leflore County				
Lincoln County				
Lowndes County				
Madison County				
Marion County				
Marshall County				
Monroe County				
Montgomery County				
Neshoba County				
Newton County				

Mississippi—Ozone (8-Hour Standard)

Designated area	Designation [a]		Category/classification	
	Date [1]	Type	Date [1]	Type
Noxubee County				
Oktibbeha County				
Panola County				
Pearl River County				
Perry County				
Pike County				
Pontotoc County				
Prentiss County				
Quitman County				
Rankin County				
Scott County				
Sharkey County				
Simpson County				
Smith County				
Stone County				
Sunflower County				
Tallahatchie County				
Tate County				
Tippah County				
Tishomingo County				
Tunica County				
Union County				
Walthall County				
Warren County				
Washington County				
Wayne County				
Webster County				
Wilkinson County				
Winston County				
Yalobusha County				
Yazoo County				

[a] Includes Indian Country located in each county or area, except as otherwise specified.
[1] This date is June 15, 2004, unless otherwise noted.

Mississippi—$PM_{2.5}$ (Annual NAAQS)

Designated area	Designation [a]	
	Date [1]	Type
Statewide:		
Adams County		Unclassifiable/Attainment.
Alcorn County		Unclassifiable/Attainment.
Amite County		Unclassifiable/Attainment.
Attala County		Unclassifiable/Attainment.
Benton County		Unclassifiable/Attainment.
Bolivar County		Unclassifiable/Attainment.
Calhoun County		Unclassifiable/Attainment.
Carroll County		Unclassifiable/Attainment.
Chickasaw County		Unclassifiable/Attainment.
Choctaw County		Unclassifiable/Attainment.
Claiborne County		Unclassifiable/Attainment.
Clarke County		Unclassifiable/Attainment.
Clay County		Unclassifiable/Attainment.
Coahoma County		Unclassifiable/Attainment.
Copiah County		Unclassifiable/Attainment.
Covington County		Unclassifiable/Attainment.
DeSoto County		Unclassifiable/Attainment.
Forrest County		Unclassifiable/Attainment.
Franklin County		Unclassifiable/Attainment.
George County		Unclassifiable/Attainment.
Greene County		Unclassifiable/Attainment.
Grenada County		Unclassifiable/Attainment.
Hancock County		Unclassifiable/Attainment.
Harrison County		Unclassifiable/Attainment.
Hinds County		Unclassifiable/Attainment.
Holmes County		Unclassifiable/Attainment.
Humphreys County		Unclassifiable/Attainment.
Issaquena County		Unclassifiable/Attainment.
Itawamba County		Unclassifiable/Attainment.
Jackson County		Unclassifiable/Attainment.

Mississippi—$PM_{2.5}$ (Annual NAAQS)

Designated area	Designation [a]	
	Date [1]	Type
Jasper County		Unclassifiable/Attainment.
Jefferson County		Unclassifiable/Attainment.
Jefferson Davis County		Unclassifiable/Attainment.
Jones County		Unclassifiable/Attainment.
Kemper County		Unclassifiable/Attainment.
Lafayette County		Unclassifiable/Attainment.
Lamar County		Unclassifiable/Attainment.
Lauderdale County		Unclassifiable/Attainment.
Lawrence County		Unclassifiable/Attainment.
Leake County		Unclassifiable/Attainment.
Lee County		Unclassifiable/Attainment.
Leflore County		Unclassifiable/Attainment.
Lincoln County		Unclassifiable/Attainment.
Lowndes County		Unclassifiable/Attainment.
Madison County		Unclassifiable/Attainment.
Marion County		Unclassifiable/Attainment.
Marshall County		Unclassifiable/Attainment.
Monroe County		Unclassifiable/Attainment.
Montgomery County		Unclassifiable/Attainment.
Neshoba County		Unclassifiable/Attainment.
Newton County		Unclassifiable/Attainment.
Noxubee County		Unclassifiable/Attainment.
Oktibbeha County		Unclassifiable/Attainment.
Panola County		Unclassifiable/Attainment.
Pearl River County		Unclassifiable/Attainment.
Perry County		Unclassifiable/Attainment.
Pike County		Unclassifiable/Attainment.
Pontotoc County		Unclassifiable/Attainment.
Prentiss County		Unclassifiable/Attainment.
Quitman County		Unclassifiable/Attainment.
Rankin County		Unclassifiable/Attainment.
Scott County		Unclassifiable/Attainment.
Sharkey County		Unclassifiable/Attainment.
Simpson County		Unclassifiable/Attainment.
Smith County		Unclassifiable/Attainment.
Stone County		Unclassifiable/Attainment.
Sunflower County		Unclassifiable/Attainment.
Tallahatchie County		Unclassifiable/Attainment.
Tate County		Unclassifiable/Attainment.
Tippah County		Unclassifiable/Attainment.
Tishomingo County		Unclassifiable/Attainment.
Tunica County		Unclassifiable/Attainment.
Union County		Unclassifiable/Attainment.
Walthall County		Unclassifiable/Attainment.
Warren County		Unclassifiable/Attainment.
Washington County		Unclassifiable/Attainment.
Wayne County		Unclassifiable/Attainment.
Webster County		Unclassifiable/Attainment.
Wilkinson County		Unclassifiable/Attainment.
Winston County		Unclassifiable/Attainment.
Yalobusha County		Unclassifiable/Attainment.
Yazoo County		Unclassifiable/Attainment.

[a] Includes Indian Country located in each county or area, except as otherwise specified.
[1] This date is 90 days after January 5, 2005, unless otherwise noted.

Mississippi—$PM_{2.5}$ [24-hour NAAQS]

Designated area	Designation for the 1997 NAAQS [a]		Designation for the 2006 NAAQS [a]	
	Date [1]	Type	Date [2]	Type
Statewide:				
Adams County		Unclassifiable/Attainment.		Unclassifiable/Attainment.
Alcorn County		Unclassifiable/Attainment.		Unclassifiable/Attainment.
Amite County		Unclassifiable/Attainment.		Unclassifiable/Attainment.
Attala County		Unclassifiable/Attainment.		Unclassifiable/Attainment.
Benton County		Unclassifiable/Attainment.		Unclassifiable/Attainment.

Mississippi—$PM_{2.5}$ [24-hour NAAQS]

Designated area	Designation for the 1997 NAAQS [a]		Designation for the 2006 NAAQS [a]	
	Date [1]	Type	Date [2]	Type
Bolivar County		Unclassifiable/Attainment.		Unclassifiable/Attainment.
Calhoun County		Unclassifiable/Attainment.		Unclassifiable/Attainment.
Carroll County		Unclassifiable/Attainment.		Unclassifiable/Attainment.
Chickasaw County		Unclassifiable/Attainment.		Unclassifiable/Attainment.
Choctaw County		Unclassifiable/Attainment.		Unclassifiable/Attainment.
Claiborne County		Unclassifiable/Attainment.		Unclassifiable/Attainment.
Clarke County		Unclassifiable/Attainment.		Unclassifiable/Attainment.
Clay County		Unclassifiable/Attainment.		Unclassifiable/Attainment.
Coahoma County		Unclassifiable/Attainment.		Unclassifiable/Attainment.
Copiah County		Unclassifiable/Attainment.		Unclassifiable/Attainment.
Covington County		Unclassifiable/Attainment.		Unclassifiable/Attainment.
DeSoto County		Unclassifiable/Attainment.		Unclassifiable/Attainment.
Forrest County		Unclassifiable/Attainment.		Unclassifiable/Attainment.
Franklin County		Unclassifiable/Attainment.		Unclassifiable/Attainment.
George County		Unclassifiable/Attainment.		Unclassifiable/Attainment.
Greene County		Unclassifiable/Attainment.		Unclassifiable/Attainment.
Grenada County		Unclassifiable/Attainment.		Unclassifiable/Attainment.
Hancock County		Unclassifiable/Attainment.		Unclassifiable/Attainment.
Harrison County		Unclassifiable/Attainment.		Unclassifiable/Attainment.
Hinds County		Unclassifiable/Attainment.		Unclassifiable/Attainment.
Holmes County		Unclassifiable/Attainment.		Unclassifiable/Attainment.
Humphreys County		Unclassifiable/Attainment.		Unclassifiable/Attainment.
Issaquena County		Unclassifiable/Attainment.		Unclassifiable/Attainment.
Itawamba County		Unclassifiable/Attainment.		Unclassifiable/Attainment.
Jackson County		Unclassifiable/Attainment.		Unclassifiable/Attainment.
Jasper County		Unclassifiable/Attainment.		Unclassifiable/Attainment.
Jefferson County		Unclassifiable/Attainment.		Unclassifiable/Attainment.
Jefferson Davis County		Unclassifiable/Attainment.		Unclassifiable/Attainment.
Jones County		Unclassifiable/Attainment.		Unclassifiable/Attainment.
Kemper County		Unclassifiable/Attainment.		Unclassifiable/Attainment.
Lafayette County		Unclassifiable/Attainment.		Unclassifiable/Attainment.
Lamar County		Unclassifiable/Attainment.		Unclassifiable/Attainment.
Lauderdale County		Unclassifiable/Attainment.		Unclassifiable/Attainment.
Lawrence County		Unclassifiable/Attainment.		Unclassifiable/Attainment.
Leake County		Unclassifiable/Attainment.		Unclassifiable/Attainment.

Mississippi—$PM_{2.5}$ [24-hour NAAQS]

Designated area	Designation for the 1997 NAAQS [a]		Designation for the 2006 NAAQS [a]	
	Date [1]	Type	Date [2]	Type
Lee County		Unclassifiable/Attainment.		Unclassifiable/Attainment.
Leflore County		Unclassifiable/Attainment.		Unclassifiable/Attainment.
Lincoln County		Unclassifiable/Attainment.		Unclassifiable/Attainment.
Lowndes County		Unclassifiable/Attainment.		Unclassifiable/Attainment.
Madison County		Unclassifiable/Attainment.		Unclassifiable/Attainment.
Marion County		Unclassifiable/Attainment.		Unclassifiable/Attainment.
Marshall County		Unclassifiable/Attainment.		Unclassifiable/Attainment.
Monroe County		Unclassifiable/Attainment.		Unclassifiable/Attainment.
Montgomery County		Unclassifiable/Attainment.		Unclassifiable/Attainment.
Neshoba County		Unclassifiable/Attainment.		Unclassifiable/Attainment.
Newton County		Unclassifiable/Attainment.		Unclassifiable/Attainment.
Noxubee County		Unclassifiable/Attainment.		Unclassifiable/Attainment.
Oktibbeha County		Unclassifiable/Attainment.		Unclassifiable/Attainment.
Panola County		Unclassifiable/Attainment.		Unclassifiable/Attainment.
Pearl River County		Unclassifiable/Attainment.		Unclassifiable/Attainment.
Perry County		Unclassifiable/Attainment.		Unclassifiable/Attainment.
Pike County		Unclassifiable/Attainment.		Unclassifiable/Attainment.
Pontotoc County		Unclassifiable/Attainment.		Unclassifiable/Attainment.
Prentiss County		Unclassifiable/Attainment.		Unclassifiable/Attainment.
Quitman County		Unclassifiable/Attainment.		Unclassifiable/Attainment.
Rankin County		Unclassifiable/Attainment.		Unclassifiable/Attainment.
Scott County		Unclassifiable/Attainment.		Unclassifiable/Attainment.
Sharkey County		Unclassifiable/Attainment.		Unclassifiable/Attainment.
Simpson County		Unclassifiable/Attainment.		Unclassifiable/Attainment.
Smith County		Unclassifiable/Attainment.		Unclassifiable/Attainment.
Stone County		Unclassifiable/Attainment.		Unclassifiable/Attainment.
Sunflower County		Unclassifiable/Attainment.		Unclassifiable/Attainment.
Tallahatchie County		Unclassifiable/Attainment.		Unclassifiable/Attainment.
Tate County		Unclassifiable/Attainment.		Unclassifiable/Attainment.
Tippah County		Unclassifiable/Attainment.		Unclassifiable/Attainment.
Tishomingo County		Unclassifiable/Attainment.		Unclassifiable/Attainment.
Tunica County		Unclassifiable/Attainment.		Unclassifiable/Attainment.
Union County		Unclassifiable/Attainment.		Unclassifiable/Attainment.
Walthall County		Unclassifiable/Attainment.		Unclassifiable/Attainment.
Warren County		Unclassifiable/Attainment.		Unclassifiable/Attainment.

Mississippi—$PM_{2.5}$ [24-hour NAAQS]

Designated area	Designation for the 1997 NAAQS [a]		Designation for the 2006 NAAQS [a]	
	Date [1]	Type	Date [2]	Type
Washington County		Unclassifiable/Attainment.		Unclassifiable/Attainment.
Wayne County		Unclassifiable/Attainment.		Unclassifiable/Attainment.
Webster County		Unclassifiable/Attainment.		Unclassifiable/Attainment.
Wilkinson County		Unclassifiable/Attainment.		Unclassifiable/Attainment.
Winston County		Unclassifiable/Attainment.		Unclassifiable/Attainment.
Yalobusha County		Unclassifiable/Attainment.		Unclassifiable/Attainment.
Yazoo County		Unclassifiable/Attainment.		Unclassifiable/Attainment.

[a] Includes Indian Country located in each county or area, except as otherwise specified.
[1] This date is 90 days after January 5, 2005, unless otherwise noted.
[2] This date is 30 days after November 13, 2009, unless otherwise noted.

Mississippi—2008 Lead NAAQS

Designated area	Designation for the 2008 NAAQS [a]	
	Date [1]	Type
Whole State		Unclassifiable/Attainment.

[a] Includes Indian Country located in each county or area, except as otherwise specified.
[1] December 31, 2011 unless otherwise noted.

[43 FR 8964, Mar. 3, 1978, as amended at 47 FR 31878, July 23, 1982; 51 FR 887, Jan. 9, 1986; 56 FR 56783, Nov. 6, 1991; 63 FR 31058, June 5, 1998; 65 FR 45238, July 20, 2000; 69 FR 23913, Apr. 30, 2004; 70 FR 983, Jan. 5, 2005; 70 FR 44476, Aug. 3, 2005; 74 FR 58741, Nov. 13, 2009; 76 FR 72111, Nov. 22, 2011; 77 FR 9562, Feb. 17, 2012]

EFFECTIVE DATE NOTE: At 77 FR 30129, May 21, 2012, §81.325 ws amended by revising the table heading for ''Mississippi—Ozone (8-Hour Standard)'' to read ''Mississippi—1997 8–Hour Ozone NAAQS (Primary and Secondary)''; by adding a new table entitled ''Mississippi—2008 8-Hour Ozone NAAQS (Primary and Secondary)'' following the existing table ''Mississippi—1997 8-Hour Ozone NAAQS (Primary and Secondary)'', effective July 20, 2012. For the convenience of the user, the added text is set forth as follows:

§81.325 Mississippi.

* * * * *

Mississippi—2008 8-Hour Ozone NAAQS (Primary and secondary)

Designated area	Designation		Classification	
	Date[1]	Type	Date[1]	Type
Memphis, TN-MS-AR: [2].				
DeSoto County (part) Portion along MPO Lines.		NonAttainment	Marginal.	
Rest of State: [3]				
Adams County		Unclassifiable/Attainment		
Alcorn County		Unclassifiable/Attainment		
Amite County		Unclassifiable/Attainment		
Attala County		Unclassifiable/Attainment		
Benton County		Unclassifiable/Attainment		
Bolivar County		Unclassifiable/Attainment		
Calhoun County		Unclassifiable/Attainment		
Carroll County		Unclassifiable/Attainment		
Chickasaw County		Unclassifiable/Attainment		
Choctaw County		Unclassifiable/Attainment		
Claiborne County		Unclassifiable/Attainment		
Clarke County		Unclassifiable/Attainment		
Clay County		Unclassifiable/Attainment.		
Coahoma County		Unclassifiable/Attainment		
Copiah County		Unclassifiable/Attainment		
Covington County		Unclassifiable/Attainment		

Mississippi—2008 8-Hour Ozone NAAQS (Primary and secondary)

Designated area	Designation		Classification	
	Date[1]	Type	Date[1]	Type
DeSoto County (remainder)	.....	Unclassifiable/Attainment		
Forrest County	.....	Unclassifiable/Attainment		
Franklin County	.....	Unclassifiable/Attainment		
George County	.....	Unclassifiable/Attainment		
Greene County	.....	Unclassifiable/Attainment		
Grenada County	.....	Unclassifiable/Attainment		
Hancock County	.....	Unclassifiable/Attainment		
Harrison County	.....	Unclassifiable/Attainment		
Hinds County	.....	Unclassifiable/Attainment		
Holmes County	.....	Unclassifiable/Attainment		
Humphreys County	.....	Unclassifiable/Attainment		
Issaquena County	.....	Unclassifiable/Attainment		
Itawamba County	.....	Unclassifiable/Attainment		
Jackson County	.....	Unclassifiable/Attainment		
Jasper County	.....	Unclassifiable/Attainment		
Jefferson County	.....	Unclassifiable/Attainment		
Jefferson Davis County	.....	Unclassifiable/Attainment		
Jones County	.....	Unclassifiable/Attainment		
Kemper County	.....	Unclassifiable/Attainment		
Lafayette County	.....	Unclassifiable/Attainment		
Lamar County	.....	Unclassifiable/Attainment		
Lauderdale County	.....	Unclassifiable/Attainment		
Lawrence County	.....	Unclassifiable/Attainment		
Leake County	.....	Unclassifiable/Attainment		
Lee County	.....	Unclassifiable/Attainment		
Leflore County	.....	Unclassifiable/Attainment		
Lincoln County	.....	Unclassifiable/Attainment		
Lowndes County	.....	Unclassifiable/Attainment		
Madison County	.....	Unclassifiable/Attainment		
Marion County	.....	Unclassifiable/Attainment		
Marshall County	.....	Unclassifiable/Attainment		
Monroe County	.....	Unclassifiable/Attainment		
Montgomery County	.....	Unclassifiable/Attainment		
Neshoba County	.....	Unclassifiable/Attainment		
Newton County	.....	Unclassifiable/Attainment		
Noxubee County	.....	Unclassifiable/Attainment		
Oktibbeha County	.....	Unclassifiable/Attainment		
Panola County	.....	Unclassifiable/Attainment		
Pearl River County	.....	Unclassifiable/Attainment		
Perry County	.....	Unclassifiable/Attainment		
Pike County	.....	Unclassifiable/Attainment		
Pontotoc County	.....	Unclassifiable/Attainment		
Prentiss County	.....	Unclassifiable/Attainment		
Quitman County	.....	Unclassifiable/Attainment		
Rankin County	.....	Unclassifiable/Attainment		
Scott County	.....	Unclassifiable/Attainment		
Sharkey County	.....	Unclassifiable/Attainment		
Simpson County	.....	Unclassifiable/Attainment		
Smith County	.....	Unclassifiable/Attainment		
Stone County	.....	Unclassifiable/Attainment		
Sunflower County	.....	Unclassifiable/Attainment		
Tallahatchie County	.....	Unclassifiable/Attainment		
Tate County.	.....	Unclassifiable/Attainment		
Tippah County	.....	Unclassifiable/Attainment		
Tishomingo County	.....	Unclassifiable/Attainment		
Tunica County	.....	Unclassifiable/Attainment		
Union County	.....	Unclassifiable/Attainment		
Walthall County	.....	Unclassifiable/Attainment		
Warren County	.....	Unclassifiable/Attainment		
Washington County	.....	Unclassifiable/Attainment		
Wayne County	.....	Unclassifiable/Attainment		
Webster County	.....	Unclassifiable/Attainment		
Wilkinson County	.....	Unclassifiable/Attainment		
Winston County	.....	Unclassifiable/Attainment		
Yalobusha County	.....	Unclassifiable/Attainment		
Yazoo County	.....	Unclassifiable/Attainment		

[1] This date is July 20, 2012, unless otherwise noted.
[2] Excludes Indian country located in each area, unless otherwise noted.
[3] Includes any Indian country in each county or area, unless otherwise specified.

* * * * *

§ 81.326 Missouri.

Missouri—TSP

Designated area	Does not meet primary standards	Does not meet secondary standards	Cannot be classified	Better than national standards
St. Louis AQCR (070):				
St. Louis (an area extending west about 2 miles from the Mississippi River, north to near I–270 and south to about 1 mile beyond the city limits			X	
Remainder of the city of St. Louis			X	
Remainder of AQCR				X
Kansas City AQCR (094):				
Kansas City (an area extending approximately from the Kansas state line east along Red Bridge Road and 115th Street to Missouri Highway 291, then north to I–70, east to Missouri Highway 7, north to U.S. Highway 24 west to Missouri Highway 291, north to Missouri Highway 152, west to Missouri Highway 9, south to U.S. Highway FF, and due south to the state line)			X	
St. Joseph: Within city limits			X	
Remainder of AQCR				X
Northern AQCR (137): Mexico (township 51 north, range 9 west)			X	
Remainder of AQCR				X
Southeastern AQCR (138)				X
Remainder of AQCR				X
Southwestern AQCR (139)				X

[1] EPA designation replaces State designation.

Missouri—SO_2

Designated area	Does not meet primary standards	Does not meet secondary standards	Cannot be classified	Better than national standards
Northern AQCR (137):				
Pike County				X
Ralls County				X
Remainder of AQCR				X
Remainder of State				X

Missouri—Carbon Monoxide

Designated Area	Designation		Classification	
	Date [1]	Type	Date [1]	Type
St. Louis Area:				
St. Louis City		Attainment		
St. Louis County (part):				
The area encompassed by the I–270 and the, Mississippi River..		Attainment		
AQCR 137 Northern Missouri Intrastate:				
Pike County		Unclassifiable/Attainment		
Ralls County		Unclassifiable/Attainment		
AQCR 137 Northern Missouri Intrastate (Remainder of).		Unclassifiable/Attainment		
Adair County				
Andrew County				
Atchison County				
Audrain County				
Boone County				
Caldwell County				
Callaway County				
Carroll County				
Chariton County				
Clark County				
Clinton County				
Cole County				
Cooper County				
Daviess County				
De Kalb County				

Missouri—Carbon Monoxide

Designated Area	Designation		Classification	
	Date [1]	Type	Date [1]	Type
Gentry County				
Grundy County				
Harrison County				
Holt County				
Howard County				
Knox County				
Lewis County				
Lincoln County				
Linn County				
Livingston County				
Macon County				
Marion County				
Mercer County				
Moniteau County				
Monroe County				
Montgomery County				
Nodaway County				
Osage County				
Putnam County				
Randolph County				
Saline County				
Schuyler County				
Scotland County				
Shelby County				
Sullivan County				
Warren County				
Worth County				
Rest of State	.....	Unclassifiable/Attainment		
Barry County				
Barton County				
Bates County				
Benton County				
Bollinger County				
Buchanan County				
Butler County				
Camden County				
Cape Girardeau County				
Carter County				
Cass County				
Cedar County				
Christina County				
Clay County				
Crawford County				
Dade County				
Dallas County				
Dent County				
Douglas County				
Dunklin County				
Franklin County				
Gasconade County				
Greene County				
Henry County				
Hickory County				
Howell County				
Iron County				
Jackson County				
Jasper County				
Jefferson County				
Johnson County				
Laclede County				
Lafayette County				
Lawrence County				
Madison County				
Maries County				
McDonald County				
Miller County				
Mississippi County				
Morgan County				
New Madrid County				
Newton County				
Oregon County				

Missouri—Carbon Monoxide

Designated Area	Designation		Classification	
	Date [1]	Type	Date [1]	Type
Ozark County				
Pemiscot County				
Perry County				
Pettis County				
Phelps County				
Platte County				
Polk County				
Pulaski County				
Ray County				
Reynolds County				
Ripley County				
Scott County				
Shannon County				
St. Charles County				
St. Clair County				
St. Francis County				
St. Louis County (part) Remainder of County				
Ste. Geevieve County				
Stoddard County				
Stone County				
Taney County				
Texas County				
Vernon County				
Washington County				
Wayne County				
Webster County				
Wright County				

[1] This date is November 15, 1990, unless otherwise noted.

Missouri—Ozone (1-Hour Standard)[2]

Designated area	Designation		Classification	
	Date [1]	Type	Date [1]	Type
Kansas City Area:.				
Clay County	7/23/92	Unclassifiable/Attainment		
Jackson County	7/23/92	Unclassifiable/Attainment		
Platte County	7/23/92	Unclassifiable/Attainment		
St. Louis Area:.				
Franklin County	5/12/03	Attainment		
Jefferson County	5/12/03	Attainment		
St. Charles County	5/12/03	Attainment		
St. Louis	5/12/03	Attainment		
St. Louis County	5/12/03	Attainment		
AQCR 094 Metro Kansas City Interstate (Remainder of).				
Buchanan County				
Cass County				
Ray County				
AQCR 137 N. Missouri Intrastate (part)				
Pike County	.....	Unclassifiable/Attainment		
Ralls County	.....	Unclassifiable/Attainment		
AQCR 137 N. Missouri Intrastate (Remainder of)	.....	Unclassifiable/Attainment		
Adair County				
Andrew County				
Atchison County				
Audrain County				
Boone County				
Caldwell County				
Callaway County				
Carroll County				
Chariton County				
Clark County				
Clinton County				
Cole County				
Cooper County				
Daviess County				
DeKalb County				
Gentry County				

Missouri—Ozone (1-Hour Standard)[2]

Designated area	Designation		Classification	
	Date [1]	Type	Date [1]	Type
Grundy County				
Harrison County				
Holt County				
Howard County				
Knox County				
Lewis County				
Lincoln County				
Linn County				
Livingston County				
Macon County				
Marion County				
Mercer County				
Moniteau County				
Monroe County				
Montgomery County				
Nodaway County				
Osage County				
Putnam County				
Randolph County				
Saline County				
Schuyler County				
Scotland County				
Shelby County				
Sullivan County				
Warren County				
Worth County				
Rest of State	.....	Unclassifiable/Attainment		
Barry County				
Barton County				
Bates County				
Benton County				
Bollinger County				
Butler County				
Camden County				
Cape Girardeau County				
Carter County				
Cedar County				
Christian County				
Crawford County				
Dade County				
Dallas County				
Dent County				
Douglas County				
Dunklin County				
Gasconade County				
Greene County				
Henry County				
Hickory County				
Howell County				
Iron County				
Jasper County				
Johnson County				
Laclede County				
Lafayette County				
Lawrence County				
Madison County				
Maries County				
McDonald County				
Miller County				
Mississippi County				
Morgan County				
New Madrid County				
Newton County				
Oregon County				
Ozark County				
Pemiscot County				
Perry County				
Pettis County				
Phelps County				
Polk County				
Pulaski County				

Missouri—Ozone (1-Hour Standard)[2]

Designated area	Designation		Classification	
	Date [1]	Type	Date [1]	Type
Reynolds County				
Ripley County				
Scott County				
Shannon County				
St. Clair County				
St. Francois County				
Ste. Genevieve County				
Stoddard County				
Stone County				
Taney County				
Texas County				
Vernon County				
Washington County				
Wayne County				
Webster County				
Wright County				

[1] This date is October 18, 2000, unless otherwise noted.
[2] The 1-hour ozone standard is revoked effective June 15, 2005 for all areas in Missouri. The Kansas City and St. Louis areas are maintenance areas for the 1-hour NAAQS for purposes of 40 CFR part 51 subpart X.

Missouri—NO_2 (1971 Annual Standard)

Designated area	Does not meet primary standards	Cannot be classified or better than national standards
Northern AQCR (137):		
Pike County		X
Ralls County		X
Remainder of AQCR		X
Remainder of State		X

Missouri—NO_2 (2010 1-Hour Standard)

Designated area	Designation [a]	
	Date [1]	Type
Adair County		Unclassifiable/Attainment.
Andrew County		Unclassifiable/Attainment.
Atchison County		Unclassifiable/Attainment.
Audrain County		Unclassifiable/Attainment.
Barry County		Unclassifiable/Attainment.
Barton County		Unclassifiable/Attainment.
Bates County		Unclassifiable/Attainment.
Benton County		Unclassifiable/Attainment.
Bollinger County		Unclassifiable/Attainment.
Boone County		Unclassifiable/Attainment.
Buchanan County		Unclassifiable/Attainment.
Butler County		Unclassifiable/Attainment.
Caldwell County		Unclassifiable/Attainment.
Callaway County		Unclassifiable/Attainment.
Camden County		Unclassifiable/Attainment.
Cape Girardeau County		Unclassifiable/Attainment.
Carroll County		Unclassifiable/Attainment.
Carter County		Unclassifiable/Attainment.
Cass County		Unclassifiable/Attainment.
Cedar County		Unclassifiable/Attainment.
Chariton County		Unclassifiable/Attainment.
Christian County		Unclassifiable/Attainment.
Clark County		Unclassifiable/Attainment.
Clay County		Unclassifiable/Attainment.
Clinton County		Unclassifiable/Attainment.
Cole County		Unclassifiable/Attainment.
Cooper County		Unclassifiable/Attainment.
Crawford County		Unclassifiable/Attainment.
Dade County		Unclassifiable/Attainment.
Dallas County		Unclassifiable/Attainment.
Daviess County		Unclassifiable/Attainment.
DeKalb County		Unclassifiable/Attainment.
Dent County		Unclassifiable/Attainment.

Missouri—NO_2 (2010 1-Hour Standard)

Designated area	Designation [a]	
	Date [1]	Type
Douglas County		Unclassifiable/Attainment.
Dunklin County		Unclassifiable/Attainment.
Franklin County		Unclassifiable/Attainment.
Gasconade County		Unclassifiable/Attainment.
Gentry County		Unclassifiable/Attainment.
Greene County		Unclassifiable/Attainment.
Grundy County		Unclassifiable/Attainment.
Harrison County		Unclassifiable/Attainment.
Henry County		Unclassifiable/Attainment.
Hickory County		Unclassifiable/Attainment.
Holt County		Unclassifiable/Attainment.
Howard County		Unclassifiable/Attainment.
Howell County		Unclassifiable/Attainment.
Iron County		Unclassifiable/Attainment.
Jackson County		Unclassifiable/Attainment.
Jasper County		Unclassifiable/Attainment.
Jefferson County		Unclassifiable/Attainment.
Johnson County		Unclassifiable/Attainment.
Knox County		Unclassifiable/Attainment.
Laclede County		Unclassifiable/Attainment.
Lafayette County		Unclassifiable/Attainment.
Lawrence County		Unclassifiable/Attainment.
Lewis County		Unclassifiable/Attainment.
Lincoln County		Unclassifiable/Attainment.
Linn County		Unclassifiable/Attainment.
Livingston County		Unclassifiable/Attainment.
McDonald County		Unclassifiable/Attainment.
Macon County		Unclassifiable/Attainment.
Madison County		Unclassifiable/Attainment.
Maries County		Unclassifiable/Attainment.
Marion County		Unclassifiable/Attainment.
Mercer County		Unclassifiable/Attainment.
Miller County		Unclassifiable/Attainment.
Mississippi County		Unclassifiable/Attainment.
Moniteau County		Unclassifiable/Attainment.
Monroe County		Unclassifiable/Attainment.
Montgomery County		Unclassifiable/Attainment.
Morgan County		Unclassifiable/Attainment.
New Madrid County		Unclassifiable/Attainment.
Newton County		Unclassifiable/Attainment.
Nodaway County		Unclassifiable/Attainment.
Oregon County		Unclassifiable/Attainment.
Osage County		Unclassifiable/Attainment.
Ozark County		Unclassifiable/Attainment.
Pemiscot County		Unclassifiable/Attainment.
Perry County		Unclassifiable/Attainment.
Pettis County		Unclassifiable/Attainment.
Phelps County		Unclassifiable/Attainment.
Pike County		Unclassifiable/Attainment.
Platte County		Unclassifiable/Attainment.
Polk County		Unclassifiable/Attainment.
Pulaski County		Unclassifiable/Attainment.
Putnam County		Unclassifiable/Attainment.
Ralls County		Unclassifiable/Attainment.
Randolph County		Unclassifiable/Attainment.
Ray County		Unclassifiable/Attainment.
Reynolds County		Unclassifiable/Attainment.
Ripley County		Unclassifiable/Attainment.
St. Charles County		Unclassifiable/Attainment.
St. Clair County		Unclassifiable/Attainment.
St. Genevieve County		Unclassifiable/Attainment.
St. Francois County		Unclassifiable/Attainment.
St. Louis County		Unclassifiable/Attainment.
St. Louis City		Unclassifiable/Attainment.
Saline County		Unclassifiable/Attainment.
Schuyler County		Unclassifiable/Attainment.
Scotland County		Unclassifiable/Attainment.
Scott County		Unclassifiable/Attainment.
Shannon County		Unclassifiable/Attainment.
Shelby County		Unclassifiable/Attainment.
Stoddard County		Unclassifiable/Attainment.

Missouri—NO_2 (2010 1-Hour Standard)

Designated area	Designation [a]	
	Date [1]	Type
Stone County		Unclassifiable/Attainment.
Sullivan County		Unclassifiable/Attainment.
Taney County		Unclassifiable/Attainment.
Texas County		Unclassifiable/Attainment.
Vernon County		Unclassifiable/Attainment.
Warren County		Unclassifiable/Attainment.
Washington County		Unclassifiable/Attainment.
Wayne County		Unclassifiable/Attainment.
Webster County		Unclassifiable/Attainment.
Worth County		Unclassifiable/Attainment.
Wright County		Unclassifiable/Attainment.

[a] Includes Indian Country located in each county or area, except as otherwise specified.
[1] This date is 90 days after October 31, 2011, unless otherwise noted.

Missouri—Ozone (8-Hour Standard)

Designated area	Designation [a]		Category/classification	
	Date [1]	Type	Date [1]	Type
Kansas City, MO-KS:				
Cass County	5/3/05	Attainment.		
Clay County	5/3/05	Attainment.		
Jackson County	5/3/05	Attainment.		
Platte County	5/3/05	Attainment.		
St. Louis, MO-IL:				
Franklin County		Nonattainment		Subpart 2/Moderate.
Jefferson County		Nonattainment		Subpart 2/Moderate.
St. Charles County		Nonattainment		Subpart 2/Moderate.
St. Louis City		Nonattainment		Subpart 2/Moderate.
St. Louis County.		Nonattainment		Subpart 2/Moderate.
AQCR 094 Metro Kansas City Interstate		Unclassifiable/Attainment.		
Buchanan County				
Ray County				
AQCR 137 N. Missouri Intrastate (part)				
Pike County		Unclassifiable/Attainment.		
Ralls County		Unclassifiable/Attainment.		
AQCR 137 N. Missouri Intrastate (remainder of)Unclassifiable/Attainment..				
Adair County				
Andrew County				
Atchison County				
Audrain County				
Boone County				
Caldwell County				
Callaway County				
Carroll County				
Chariton County				
Clark County				
Clinton County				
Cole County				
Cooper County				
Daviess County				
DeKalb County				
Gentry County				
Grundy County				
Harrison County				
Holt County				
Howard County				
Knox County				
Lewis County				
Lincoln County				
Linn County				
Livingston County				
Macon County				
Marion County				
Mercer County				
Moniteau County				
Monroe County				
Montgomery County				
Nodaway County				

Missouri—Ozone (8-Hour Standard)

Designated area	Designation [a]		Category/classification	
	Date [1]	Type	Date [1]	Type
Osage County				
Putnam County				
Randolph County				
Saline County				
Schuyler County				
Scotland County				
Shelby County				
Sullivan County				
Warren County				
Worth County				
Rest of State:	.....	Unclassifiable/Attainment		
Barry County				
Barton County				
Bates County				
Benton County				
Bollinger County				
Butler County				
Camden County				
Cape Girardeau County				
Carter County				
Cedar County				
Christian County				
Crawford County				
Dade County				
Dallas County				
Dent County				
Douglas County				
Dunklin County				
Gasconade County				
Greene County				
Henry County				
Hickory County				
Howell County				
Iron County				
Jasper County				
Johnson County				
Laclede County				
Lafayette County				
Lawrence County				
Madison County				
Maries County				
McDonald County				
Miller County				
Mississippi County				
Morgan County				
New Madrid County				
Newton County				
Oregon County				
Ozark County				
Pemiscot County				
Perry County				
Pettis County				
Phelps County				
Polk County				
Pulaski County				
Reynolds County				
Ripley County				
St. Clair County				
St. Francois County				
Ste. Genevieve County				
Scott County				
Shannon County				
Stoddard County				
Stone County				
Taney County				
Texas County				
Vernon County				
Washington County				
Wayne County				
Webster County				

Missouri—Ozone (8-Hour Standard)

Designated area	Designation [a]		Category/classification	
	Date [1]	Type	Date [1]	Type
Wright County				

[a] Includes Indian Country located in each county or area, except as otherwise specified.
[1] This date is June 15, 2004, unless otherwise noted.

Missouri—$PM_{2.5}$ (Annual NAAQS)

Designated area	Designation [a]	
	Date [1]	Type
St. Louis, MO-IL:		
Franklin County		Nonattainment.
Jefferson County		Nonattainment.
St. Charles County		Nonattainment.
St. Louis County		Nonattainment.
St. Louis City		Nonattainment.
Rest of State:		
Adair County		Unclassifiable/Attainment.
Andrew County		Unclassifiable/Attainment.
Atchison County		Unclassifiable/Attainment.
Audrain County		Unclassifiable/Attainment.
Barry County		Unclassifiable/Attainment.
Barton County		Unclassifiable/Attainment.
Bates County		Unclassifiable/Attainment.
Benton County		Unclassifiable/Attainment.
Bollinger County		Unclassifiable/Attainment.
Boone County		Unclassifiable/Attainment.
Buchanan County		Unclassifiable/Attainment.
Butler County		Unclassifiable/Attainment.
Caldwell County		Unclassifiable/Attainment.
Callaway County		Unclassifiable/Attainment.
Camden County		Unclassifiable/Attainment.
Cape Girardeau County		Unclassifiable/Attainment.
Carroll County		Unclassifiable/Attainment.
Carter County		Unclassifiable/Attainment.
Cass County		Unclassifiable/Attainment.
Cedar County		Unclassifiable/Attainment.
Chariton County		Unclassifiable/Attainment.
Christian County		Unclassifiable/Attainment.
Clark County		Unclassifiable/Attainment.
Clay County		Unclassifiable/Attainment.
Clinton County		Unclassifiable/Attainment.
Cole County		Unclassifiable/Attainment.
Cooper County		Unclassifiable/Attainment.
Crawford County		Unclassifiable/Attainment.
Dade County		Unclassifiable/Attainment.
Dallas County		Unclassifiable/Attainment.
Daviess County		Unclassifiable/Attainment.
DeKalb County		Unclassifiable/Attainment.
Dent County		Unclassifiable/Attainment.
Douglas County		Unclassifiable/Attainment.
Dunklin County		Unclassifiable/Attainment.
Gasconade County		Unclassifiable/Attainment.
Gentry County		Unclassifiable/Attainment.
Greene County		Unclassifiable/Attainment.
Grundy County		Unclassifiable/Attainment.
Harrison County		Unclassifiable/Attainment.
Henry County		Unclassifiable/Attainment.
Hickory County		Unclassifiable/Attainment.
Holt County		Unclassifiable/Attainment.
Howard County		Unclassifiable/Attainment.
Howell County		Unclassifiable/Attainment.
Iron County		Unclassifiable/Attainment.
Jackson County		Unclassifiable/Attainment.
Jasper County		Unclassifiable/Attainment.
Johnson County		Unclassifiable/Attainment.
Knox County		Unclassifiable/Attainment.
Laclede County		Unclassifiable/Attainment.
Lafayette County		Unclassifiable/Attainment.
Lawrence County		Unclassifiable/Attainment.
Lewis County		Unclassifiable/Attainment.

Missouri—$PM_{2.5}$ (Annual NAAQS)

Designated area	Designation [a]	
	Date [1]	Type
Lincoln County		Unclassifiable/Attainment.
Linn County		Unclassifiable/Attainment.
Livingston County		Unclassifiable/Attainment.
McDonald County		Unclassifiable/Attainment.
Macon County		Unclassifiable/Attainment.
Madison County		Unclassifiable/Attainment.
Maries County		Unclassifiable/Attainment.
Marion County		Unclassifiable/Attainment.
Mercer County		Unclassifiable/Attainment.
Miller County		Unclassifiable/Attainment.
Mississippi County		Unclassifiable/Attainment.
Moniteau County		Unclassifiable/Attainment.
Monroe County		Unclassifiable/Attainment.
Montgomery County		Unclassifiable/Attainment.
Morgan County		Unclassifiable/Attainment.
New Madrid County		Unclassifiable/Attainment.
Newton County		Unclassifiable/Attainment.
Oregon County		Unclassifiable/Attainment.
Osage County		Unclassifiable/Attainment.
Ozark County		Unclassifiable/Attainment.
Pemiscot County		Unclassifiable/Attainment.
Perry County		Unclassifiable/Attainment.
Pettis County		Unclassifiable/Attainment.
Phelps County		Unclassifiable/Attainment.
Pike County		Unclassifiable/Attainment.
Platte County		Unclassifiable/Attainment.
Polk County		Unclassifiable/Attainment.
Pulaski County		Unclassifiable/Attainment.
Putnam County		Unclassifiable/Attainment.
Ralls County		Unclassifiable/Attainment.
Randolph County		Unclassifiable/Attainment.
Ray County		Unclassifiable/Attainment.
Reynolds County		Unclassifiable/Attainment.
Ripley County		Unclassifiable/Attainment.
St. Clair County		Unclassifiable/Attainment.
St. Genevieve County		Unclassifiable/Attainment.
St. Francois County		Unclassifiable/Attainment.
Saline County		Unclassifiable/Attainment.
Schuyler County		Unclassifiable/Attainment.
Scotland County		Unclassifiable/Attainment.
Scott County		Unclassifiable/Attainment.
Shannon County		Unclassifiable/Attainment.
Shelby County		Unclassifiable/Attainment.
Stoddard County		Unclassifiable/Attainment.
Stone County		Unclassifiable/Attainment.
Sullivan County		Unclassifiable/Attainment.
Taney County		Unclassifiable/Attainment.
Texas County		Unclassifiable/Attainment.
Vernon County		Unclassifiable/Attainment.
Warren County		Unclassifiable/Attainment.
Washington County		Unclassifiable/Attainment.
Wayne County		Unclassifiable/Attainment.
Webster County		Unclassifiable/Attainment.
Worth County		Unclassifiable/Attainment.
Wright County		Unclassifiable/Attainment.

[a] Includes Indian Country located in each county or area, except as otherwise specified.
[1] This date is 90 days after January 5, 2005, unless otherwise noted.

Missouri—$PM_{2.5}$ [24-hour NAAQS]

Designated area	Designation for the 1997 NAAQS [a]		Designation for the 2006 NAAQS [a]	
	Date [1]	Type	Date [2]	Type
Statewide:				
Adair County		Unclassifiable/Attainment		Unclassifiable/Attainment.
Andrew County		Unclassifiable/Attainment		Unclassifiable/Attainment.
Atchison County		Unclassifiable/Attainment		Unclassifiable/Attainment.

Missouri—$PM_{2.5}$ [24-hour NAAQS]

Designated area	Designation for the 1997 NAAQS [a]		Designation for the 2006 NAAQS [a]	
	Date [1]	Type	Date [2]	Type
Audrain County		Unclassifiable/Attainment		Unclassifiable/Attainment.
Barry County		Unclassifiable/Attainment		Unclassifiable/Attainment.
Barton County		Unclassifiable/Attainment		Unclassifiable/Attainment.
Bates County		Unclassifiable/Attainment		Unclassifiable/Attainment.
Benton County		Unclassifiable/Attainment		Unclassifiable/Attainment.
Bollinger County		Unclassifiable/Attainment		Unclassifiable/Attainment.
Boone County		Unclassifiable/Attainment		Unclassifiable/Attainment.
Buchanan County		Unclassifiable/Attainment		Unclassifiable/Attainment.
Butler County		Unclassifiable/Attainment		Unclassifiable/Attainment.
Caldwell County		Unclassifiable/Attainment		Unclassifiable/Attainment.
Callaway County		Unclassifiable/Attainment		Unclassifiable/Attainment.
Camden County		Unclassifiable/Attainment		Unclassifiable/Attainment.
Cape Girardeau County		Unclassifiable/Attainment		Unclassifiable/Attainment.
Carroll County		Unclassifiable/Attainment		Unclassifiable/Attainment.
Carter County		Unclassifiable/Attainment		Unclassifiable/Attainment.
Cass County		Unclassifiable/Attainment		Unclassifiable/Attainment.
Cedar County		Unclassifiable/Attainment		Unclassifiable/Attainment.
Chariton County		Unclassifiable/Attainment		Unclassifiable/Attainment.
Christian County		Unclassifiable/Attainment		Unclassifiable/Attainment.
Clark County		Unclassifiable/Attainment		Unclassifiable/Attainment.
Clay County		Unclassifiable/Attainment		Unclassifiable/Attainment.
Clinton County		Unclassifiable/Attainment		Unclassifiable/Attainment.
Cole County		Unclassifiable/Attainment		Unclassifiable/Attainment.
Cooper County		Unclassifiable/Attainment		Unclassifiable/Attainment.
Crawford County		Unclassifiable/Attainment		Unclassifiable/Attainment.
Dade County		Unclassifiable/Attainment		Unclassifiable/Attainment.
Dallas County		Unclassifiable/Attainment		Unclassifiable/Attainment.
Daviess County		Unclassifiable/Attainment		Unclassifiable/Attainment.
DeKalb County		Unclassifiable/Attainment		Unclassifiable/Attainment.
Dent County		Unclassifiable/Attainment		Unclassifiable/Attainment.
Douglas County		Unclassifiable/Attainment		Unclassifiable/Attainment.
Dunklin County		Unclassifiable/Attainment		Unclassifiable/Attainment.
Franklin County		Unclassifiable/Attainment		Unclassifiable/Attainment.
Gasconade County		Unclassifiable/Attainment		Unclassifiable/Attainment.
Gentry County		Unclassifiable/Attainment		Unclassifiable/Attainment.

Missouri—$PM_{2.5}$ [24-hour NAAQS]

Designated area	Designation for the 1997 NAAQS [a]		Designation for the 2006 NAAQS [a]	
	Date [1]	Type	Date [2]	Type
Greene County		Unclassifiable/Attainment		Unclassifiable/Attainment.
Grundy County		Unclassifiable/Attainment		Unclassifiable/Attainment.
Harrison County		Unclassifiable/Attainment		Unclassifiable/Attainment.
Henry County		Unclassifiable/Attainment		Unclassifiable/Attainment.
Hickory County		Unclassifiable/Attainment		Unclassifiable/Attainment.
Holt County		Unclassifiable/Attainment		Unclassifiable/Attainment.
Howard County		Unclassifiable/Attainment		Unclassifiable/Attainment.
Howell County		Unclassifiable/Attainment		Unclassifiable/Attainment.
Iron County		Unclassifiable/Attainment		Unclassifiable/Attainment.
Jackson County		Unclassifiable/Attainment		Unclassifiable/Attainment.
Jasper County		Unclassifiable/Attainment		Unclassifiable/Attainment.
Jefferson County		Unclassifiable/Attainment		Unclassifiable/Attainment.
Johnson County		Unclassifiable/Attainment		Unclassifiable/Attainment.
Knox County		Unclassifiable/Attainment		Unclassifiable/Attainment.
Laclede County		Unclassifiable/Attainment		Unclassifiable/Attainment.
Lafayette County		Unclassifiable/Attainment		Unclassifiable/Attainment.
Lawrence County		Unclassifiable/Attainment		Unclassifiable/Attainment.
Lewis County		Unclassifiable/Attainment		Unclassifiable/Attainment.
Lincoln County		Unclassifiable/Attainment		Unclassifiable/Attainment.
Linn County		Unclassifiable/Attainment		Unclassifiable/Attainment.
Livingston County		Unclassifiable/Attainment		Unclassifiable/Attainment.
McDonald County		Unclassifiable/Attainment		Unclassifiable/Attainment.
Macon County		Unclassifiable/Attainment		Unclassifiable/Attainment.
Madison County		Unclassifiable/Attainment		Unclassifiable/Attainment.
Maries County		Unclassifiable/Attainment		Unclassifiable/Attainment.
Marion County		Unclassifiable/Attainment		Unclassifiable/Attainment.
Mercer County		Unclassifiable/Attainment		Unclassifiable/Attainment.
Miller County		Unclassifiable/Attainment		Unclassifiable/Attainment.
Mississippi County		Unclassifiable/Attainment		Unclassifiable/Attainment.
Moniteau County		Unclassifiable/Attainment		Unclassifiable/Attainment.
Monroe County		Unclassifiable/Attainment		Unclassifiable/Attainment.
Montgomery County		Unclassifiable/Attainment		Unclassifiable/Attainment.
Morgan County		Unclassifiable/Attainment		Unclassifiable/Attainment.
New Madrid County		Unclassifiable/Attainment		Unclassifiable/Attainment.
Newton County		Unclassifiable/Attainment		Unclassifiable/Attainment.

Missouri—$PM_{2.5}$ [24-hour NAAQS]

Designated area	Designation for the 1997 NAAQS [a]		Designation for the 2006 NAAQS [a]	
	Date [1]	Type	Date [2]	Type
Nodaway County		Unclassifiable/Attainment		Unclassifiable/Attainment.
Oregon County		Unclassifiable/Attainment		Unclassifiable/Attainment.
Osage County		Unclassifiable/Attainment		Unclassifiable/Attainment.
Ozark County		Unclassifiable/Attainment		Unclassifiable/Attainment.
Pemiscot County		Unclassifiable/Attainment		Unclassifiable/Attainment.
Perry County		Unclassifiable/Attainment		Unclassifiable/Attainment.
Pettis County		Unclassifiable/Attainment		Unclassifiable/Attainment.
Phelps County		Unclassifiable/Attainment		Unclassifiable/Attainment.
Pike County		Unclassifiable/Attainment		Unclassifiable/Attainment.
Platte County		Unclassifiable/Attainment		Unclassifiable/Attainment.
Polk County		Unclassifiable/Attainment		Unclassifiable/Attainment.
Pulaski County		Unclassifiable/Attainment		Unclassifiable/Attainment.
Putnam County		Unclassifiable/Attainment		Unclassifiable/Attainment.
Ralls County		Unclassifiable/Attainment		Unclassifiable/Attainment.
Randolph County		Unclassifiable/Attainment		Unclassifiable/Attainment.
Ray County		Unclassifiable/Attainment		Unclassifiable/Attainment.
Reynolds County		Unclassifiable/Attainment		Unclassifiable/Attainment.
Ripley County		Unclassifiable/Attainment		Unclassifiable/Attainment.
St Charles County		Unclassifiable/Attainment		Unclassifiable/Attainment.
St Clair County		Unclassifiable/Attainment		Unclassifiable/Attainment.
St Genevieve County		Unclassifiable/Attainment		Unclassifiable/Attainment.
St Francois County		Unclassifiable/Attainment		Unclassifiable/Attainment.
St Louis City		Unclassifiable/Attainment		Unclassifiable/Attainment.
St Louis County		Unclassifiable/Attainment		Unclassifiable/Attainment.
Saline County		Unclassifiable/Attainment		Unclassifiable/Attainment.
Schuyler County		Unclassifiable/Attainment		Unclassifiable/Attainment.
Scotland County		Unclassifiable/Attainment		Unclassifiable/Attainment.
Scott County		Unclassifiable/Attainment		Unclassifiable/Attainment.
Shannon County		Unclassifiable/Attainment		Unclassifiable/Attainment.
Shelby County		Unclassifiable/Attainment		Unclassifiable/Attainment.
Stoddard County		Unclassifiable/Attainment		Unclassifiable/Attainment.
Stone County		Unclassifiable/Attainment		Unclassifiable/Attainment.
Sullivan County		Unclassifiable/Attainment		Unclassifiable/Attainment.
Taney County		Unclassifiable/Attainment		Unclassifiable/Attainment.
Texas County		Unclassifiable/Attainment		Unclassifiable/Attainment.

Missouri—$PM_{2.5}$ [24-hour NAAQS]

Designated area	Designation for the 1997 NAAQS [a]		Designation for the 2006 NAAQS [a]	
	Date [1]	Type	Date [2]	Type
Vernon County		Unclassifiable/Attainment		Unclassifiable/Attainment.
Warren County		Unclassifiable/Attainment		Unclassifiable/Attainment.
Washington County		Unclassifiable/Attainment		Unclassifiable/Attainment.
Wayne County		Unclassifiable/Attainment		Unclassifiable/Attainment.
Webster County		Unclassifiable/Attainment		Unclassifiable/Attainment.
Worth County		Unclassifiable/Attainment		Unclassifiable/Attainment.
Wright County		Unclassifiable/Attainment		Unclassifiable/Attainment.

[a] Includes Indian Country located in each county or area, except as otherwise specified.
[1] This date is 90 days after January 5, 2005, unless otherwise noted.
[2] This date is 30 days after November 13, 2009, unless otherwise noted.

Missouri—1978 Lead NAAQS

Designated area	Designation		Classification	
	Date	Type	Date	Type
Iron County (part)				
Within boundaries of Dent Township	10/18/00	Attainment		
Iron County (part)				
Within boundaries of Liberty and Arcadia Townships.	10/29/04	Attainment		
Jefferson County (part)				
Within city limits of Herculaneum	1/6/92	Nonattainment		
Dent County	1/6/92	Unclassifiable		
Holt County	1/6/92	Unclassifiable		
Rest of State Not Designated.				

Missouri—2008 Lead NAAQS

Designated area	Designation for the 2008 NAAQS [a]	
	Date [1]	Type
Iron, Dent, and Reynolds Counties, MO:		
Dent County (part)	2/31/10	Nonattainment.
Sections 4, 9, 16, 21, 28, 33 of T34N, R2W.		
Iron County (part)	12/31/10	Nonattainment.
Sections 6–7, 18–19, 30–32 of T34N, R1W and Sections 1–3, 10–15, 22–27, 34–36 of T34N, R2W.		
Reynolds County (part)	12/31/10	Nonattainment.
Sections 5–7 of T33N, R1W and Sections 1–3, 10–12 of T33N, R2W.		
Jefferson County, MO:		
Jefferson County (part)	12/31/10	Nonattainment.
Within city limits of Herculaneum.		
Rest of State		Unclassifiable/Attainment.

[a] Includes Indian Country located in each county or area, except as otherwise specified.
[1] December 31, 2011 unless otherwise noted.

[43 FR 8964, Mar. 3, 1978]

EDITORIAL NOTE: For FEDERAL REGISTER citations affecting § 81.326 see the List of CFR Sections Affected, which appears in the Finding Aids section of the printed volume and at *www.fdsys.gov*.

EFFECTIVE DATE NOTE: At 77 FR 30130, May 21, 2012, § 81.326 was amended by revising the table heading for ''Missouri—Ozone (8-Hour Standard)'' to read ''Missouri—1997 8-Hour Ozone NAAQS (Primary and Secondary)''; by adding a new table entitled ''Missouri—2008 8-Hour Ozone NAAQS (Primary and Secondary)'' following the newly designated table ''Missouri—1997 8-Hour Ozone NAAQS (Primary and Secondary)'', effective July 20, 2012. For the convenience of the user, the added text is set forth as follows:

§81.326 Missouri.

* * * * *

Missouri—2008 8-Hour Ozone NAAQS (Primary and secondary)

Designated area	Designation		Classification	
	Date [1]	Type	Date [1]	Type
St. Louis-St. Charles-Farmington, MO-IL: [2]	.....	Nonattainment	.....	Marginal.
Franklin County				
Jefferson County				
St. Charles County				
St. Louis County				
St. Louis City				
Rest of State: [3]	.....	Unclassifiable/Attainment		
Adair County				
Andrew County				
Atchison County				
Audrain County				
Barry County				
Barton County				
Bates County				
Benton County				
Bollinger County				
Boone County				
Buchanan County				
Butler County				
Caldwell County				
Callaway County				
Camden County				
Cape Girardeau County				
Carter County				
Cass County				
Cedar County				
Chariton County				
Christian County				
Clark County				
Clay County				
Clinton County				
Cole County				
Cooper County				
Crawford County				
Dade County				
Dallas County				
Daviess County				
DeKalb County				
Dent County				
Douglas County				
Dunklin County				
Gasconade County				
Gentry County				
Greene County				
Grundy County				
Harrison County				
Henry County				
Hickory County				
Holt County				
Howard County				
Howell County				
Iron County				
Jackson County				
Jasper County				
Johnson County				
Knox County				
Laclede County				
Lafayette County				
Lawrence County				
Lewis County				
Lincoln County				
Linn County				
Livingston County				
McDonald County				
Macon County				
Madison County				

Missouri—2008 8-Hour Ozone NAAQS (Primary and secondary)

Designated area	Designation		Classification	
	Date [1]	Type	Date [1]	Type
Maries County				
Marion County				
Mercer County				
Miller County				
Mississippi County				
Moniteau County				
Monroe County				
Montgomery County				
Morgan County				
New Madrid County				
Newton County				
Nodaway County				
Oregon County				
Osage County				
Ozark County				
Pemiscot County				
Perry County				
Pettis County				
Phelps County				
Pike County				
Platte County				
Polk County				
Pulaski County				
Putnam County				
Ralls County				
Randolph County				
Ray County				
Reynolds County				
Ripley County				
St. Clair County				
St. Genevieve County				
St. Francois County				
Saline County				
Schuyler County				
Scotland County				
Scott County				
Shannon County				
Shelby County				
Stoddard County				
Stone County				
Sullivan County				
Taney County				
Texas County				
Vernon County				
Warren County				
Washington County				
Wayne County				
Webster County				
Worth County				
Wright County				

[1] This date is July 20, 2012, unless otherwise noted.
[2] Excludes Indian country located in each area, unless otherwise noted.
[3] Includes any Indian country in each county or area, unless otherwise specified.

* * * * *

§ 81.327 Montana.

Montana—SO_2

Designated area	Does not meet primary standards	Does not meet secondary standards	Cannot be classified	Better than national standards
Laurel Area	X			
East Helena Area	X	X		
Anaconda Area				X
Rest of State				X

Montana—Carbon Monoxide

Designated Area	Designation		Classification	
	Date [1]	Type	Date [1]	Type
Billings Area				
Yellowstone County (part):.				
The following areas of Yellowstone Co. (Range and Township) sections: R25E T1N—Sections 24 through 27 and 34 through 36; R25E T1S—Sections 1, 2, and 12; R26E T1N Sections 19 through 22 and 27 through 34; R26E T1S Sections 2 through 11 and 15 through 18..	April 22, 2002.	Attainment		
Great Falls Area	July 8, 2002	Attainment		
Cascade County (part).				
Great Falls designated area: North boundary—9th Avenue South or its straight line extension; East boundary—54th Street South or its straight line extension; South boundary—11th Avenue South or its straight line extension; West boundary—2nd Street South or its straight line extension.				
Missoula Area:				
Missoula County (part)	September 17, 2007	Attainment		
Missoula and vicinity including the following (Range and Township) sections: R19W T14N—sections: 29 and 32; R19W T13N—sections 2, 5, 7, 8, 11, 14 through 24, and 26 through 34; R19W T12N—sections: 4 through 7; R20W T13N—sections: 23 through 26, 35 and 36				
Beaverhead County		Unclassifiable/Attainment		
Big Horn County (part)		Unclassifiable/Attainment		
excluding Crow, Northern Cheyenne Indian Reservations				
Blaine County (part)		Unclassifiable/Attainment		
excluding Fort Belknap Indian Reservation				
Broadwater County		Unclassifiable/Attainment		
Carbon County		Unclassifiable/Attainment		
Carter County		Unclassifiable/Attainment		
Cascade County (part)				
Remainder of Cascade County		Unclassifiable/Attainment		
Chouteau County (part)		Unclassifiable/Attainment		
excluding Rocky Boy Indian Reservation				
Custer County		Unclassifiable/Attainment		
Daniels County (part)		Unclassifiable/Attainment		
excluding Fort Peck Indian Reservation				
Dawson County		Unclassifiable/Attainment		
Deer Lodge County		Unclassifiable/Attainment		
Fallon County		Unclassifiable/Attainment		
Fergus County		Unclassifiable/Attainment		
Flathead County (part)		Unclassifiable/Attainment		
excluding Flathead Indian Resevation				
Gallatin County		Unclassifiable/Attainment		
Garfield County		Unclassifiable/Attainment		
Glacier County (part)		Unclassifiable/Attainment		
excluding Blackfeet Indian Reservation				
Golden Valley County		Unclassifiable/Attainment		
Granite County		Unclassifiable/Attainment		
Hill County (part)		Unclassifiable/Attainment		
excluding Rocky Boy Indian Reservation				
Jefferson County		Unclassifiable/Attainment		
Judith Basin County		Unclassifiable/Attainment		
Lake County (part)		Unclassifiable/Attainment		
excluding Flathead Indian Reservation				
Lewis and Clark County		Unclassifiable/Attainment		
Liberty County		Unclassifiable/Attainment		
Lincoln County		Unclassifiable/Attainment		
Madison County		Unclassifiable/Attainment		
McCone County		Unclassifiable/Attainment		
Meagher County		Unclassifiable/Attainment		

Montana—Carbon Monoxide

Designated Area	Designation		Classification	
	Date [1]	Type	Date [1]	Type
Mineral County		Unclassifiable/Attainment		
Missoula County (part)				
Remainder of Missoula County		Unclassifiable/Attainment		
Musselshell County		Unclassifiable/Attainment		
Park County		Unclassifiable/Attainment		
Petroleum County		Unclassifiable/Attainment		
Phillips County (part)		Unclassifiable/Attainment		
excluding Fort Belknap Indian Reservation				
Pondera County (part)		Unclassifiable/Attainment		
excluding Blackfeet Indian Reservation				
Powder River County		Unclassifiable/Attainment		
Powell County		Unclassifiable/Attainment		
Prairie County		Unclassifiable/Attainment		
Ravalli County		Unclassifiable/Attainment		
Richland County		Unclassifiable/Attainment		
Roosevelt County (part)		Unclassifiable/Attainment		
excluding Fort Peck Indian Reservation				
Rosebud County (part)		Unclassifiable/Attainment		
excluding Northern Cheyenne Indian Reservation				
Sanders County (part)		Unclassifiable/Attainment		
excluding Flathead Indian Reservation				
Sheridan County (part)		Unclassifiable/Attainment		
excluding Fort Peck Indian Reservation				
Silver Bow County		Unclassifiable/Attainment		
Stillwater County		Unclassifiable/Attainment		
Sweet Grass County		Unclassifiable/Attainment		
Teton County		Unclassifiable/Attainment		
Toole County		Unclassifiable/Attainment		
Treasure County		Unclassifiable/Attainment		
Valley County (part)		Unclassifiable/Attainment		
excluding Fort Peck Indian Reservation				
Wheatland County		Unclassifiable/Attainment		
Wibaux County		Unclassifiable/Attainment		
Yellowstone County (part)				
Remainder of Yellowstone County		Unclassifiable/Attainment		
Yellowstone National Park		Unclassifiable/Attainment		
Blackfeet Indian Reservation		Unclassifiable/Attainment		
Glacier County (part)				
area inside Blackfeet Reservation				
Pondera County (part)				
area inside Blackfeet Reservation				
Crow Indian Reservation		Unclassifiable/Attainment		
Bighorn County (part)				
area inside Crow Reservation				
Yellowstone (part)				
area inside Crow Reservation				
Flathead Indian Reservation		Unclassifiable/Attainment		
Flathead County (part)				
area inside Flathead Reservation				
Lake County (part)				
area inside Flathead Reservation				
Missoula County (part)				
area inside Flathead Reservation				
Sanders County (part)				
area inside Flathead Reservation				
Fort Belknap Indian Reservation		Unclassifiable/Attainment		
Blaine County (part)				
area inside Fort Belknap Reservation				
Phillips County (part)				
area inside Fort Belknap Reservation				
Fort Peck Indian Reservation		Unclassifiable/Attainment		
Daniels County (part)				
area inside Fort Peck Reservation				
Roosevelt County (part)				
area inside Fort Peck Reservation				
Sheridan County (part)				
area inside Fort Peck Reservation				
Valley County (part)				
area inside Fort Peck Reservation				
Northern Cheyenne Indian Reservation		Unclassifiable/Attainment		

Montana—Carbon Monoxide

Designated Area	Designation		Classification	
	Date [1]	Type	Date [1]	Type
Bighorn County (part) area inside Northern Cheyenne Reservation Rosebud County (part) area inside Northern Cheyenne Reservation Rocky Boy Indian Reservation Chouteau County (part) area inside Rocky Boy Reservation Hill County (part) area inside Rocky Boy Reservation	.....	Unclassifiable/Attainment		

[1] This date is November 15, 1990, unless otherwise noted.

Montana—1978 Lead NAAQS

Designated Area	Designation		Classification	
	Date	Type	Date	Type
Lewis & Clark County (part) City of East Helena and vicinity Northern boundary - horizontal universal transverse mercatur(UTM) 5,162,000 mN; eastern boundary - vertical UTM 432,500 mE; southern boundary - horizontal UTM 5,158,000 mN; western boundary - vertical UTM 427,000 mE	1/6/92	Nonattainment		
Rest of State Not Designated				

Montana—Ozone (1-Hour Standard)[2]

Designated area	Designation		Classification	
	Date [1]	Type	Date [1]	Type
Beaverhead County	.....	Unclassifiable/Attainment		
Big Horn County (part) excluding Crow, Northern Cheyenne Indian Reservations.	.....	Unclassifiable/Attainment		
Blaine County (part) excluding Fort Belknap Indian Reservation				
Broadwater County	.....	Unclassifiable/Attainment		
Carbon County	.....	Unclassifiable/Attainment		
Carter County	.....	Unclassifiable/Attainment		
Cascade County	.....	Unclassifiable/Attainment		
Chouteau County (part) excluding Rocky Boy Indian Reservation.	.....	Unclassifiable/Attainment		
Custer County	.....	Unclassifiable/Attainment		
Daniels County (part) excluding Fort Peck Indian Reservation.	.....	Unclassifiable/Attainment		
Dawson County	.....	Unclassifiable/Attainment		
Deer Lodge County	.....	Unclassifiable/Attainment		
Fallon County	.....	Unclassifiable/Attainment		
Fergus County	.....	Unclassifiable/Attainment		
Flathead County (part) excluding Flathead Indian Reservation.	.....	Unclassifiable/Attainment		
Gallatin County	.....	Unclassifiable/Attainment		
Garfield County	.....	Unclassifiable/Attainment		
Glacier County (part) excluding Blackfeet Indian Reservation.	.....	Unclassifiable/Attainment		
Golden Valley County	.....	Unclassifiable/Attainment		
Granite County	.....	Unclassifiable/Attainment		
Hill County (part) excluding Rocky Boy Indian Reservation.	.....	Unclassifiable/Attainment		
Jefferson County	.....	Unclassifiable/Attainment		
Judith Basin County	.....	Unclassifiable/Attainment		
Lake County (part) excluding Flathead Indian Reservation.	.....	Unclassifiable/Attainment		
Lewis and Clark County	.....	Unclassifiable/Attainment		
Liberty County	.....	Unclassifiable/Attainment		
Lincoln County	.....	Unclassifiable/Attainment		
Madison County	.....	Unclassifiable/Attainment		
McCone County	.....	Unclassifiable/Attainment		

Montana—Ozone (1-Hour Standard)[2]

Designated area	Designation		Classification	
	Date [1]	Type	Date [1]	Type
Meagher County		Unclassifiable/Attainment		
Mineral County		Unclassifiable/Attainment		
Missoula County (part) excluding Flathead Indian Reservation.		Unclassifiable/Attainment		
Musselshell County		Unclassifiable/Attainment		
Park County		Unclassifiable/Attainment		
Petroleum County		Unclassifiable/Attainment		
Phillips County (part) excluding Fort Belknap Indian Reservation.		Unclassifiable/Attainment		
Pondera County (part) excluding Blackfeet Indian Reservation.		Unclassifiable/Attainment		
Powder River County		Unclassifiable/Attainment		
Powell County		Unclassifiable/Attainment		
Prairie County		Unclassifiable/Attainment		
Ravalli County		Unclassifiable/Attainment		
Richland County		Unclassifiable/Attainment		
Roosevelt County (part) excluding Fort Peck Indian Reservation.		Unclassifiable/Attainment		
Rosebud County (part) excluding Northern Cheyenne Indian Reservation.		Unclassifiable/Attainment		
Sanders County (part) excluding Flathead Indian Reservation.		Unclassifiable/Attainment		
Sheridan County (part) excluding Fort Peck Indian Reservation.		Unclassifiable/Attainment		
Silver Bow County		Unclassifiable/Attainment		
Stillwater County		Unclassifiable/Attainment		
Sweet Grass County		Unclassifiable/Attainment		
Teton County		Unclassifiable/Attainment		
Toole County		Unclassifiable/Attainment		
Treasure County		Unclassifiable/Attainment		
Valley County (part) excluding Fort Peck Indian Reservation.		Unclassifiable/Attainment		
Wheatland County		Unclassifiable/Attainment		
Wibaux County		Unclassifiable/Attainment		
Yellowstone County (part) excluding Crow Indian Reservation.		Unclassifiable/Attainment		
Yellowstone Natl Park		Unclassifiable/Attainment		
Blackfeet Indian Reservation		Unclassifiable/Attainment		
Glacier County (part) area inside Blackfeet Reservation				
Pondera County (part) area inside Blackfeet Reservation				
Crow Indian Reservation		Unclassifiable/Attainment		
Bighorn County (part) area inside Crow Reservation				
Yellowstone (part) area inside Crow Reservation				
Flathead Indian Reservation		Unclassifiable/Attainment		
Flathead County (part) area inside Flathead Reservation				
Lake County (part) area inside Flathead Reservation				
Missoula County (part) area inside Flathead Reservation				
Sanders County (part) area inside Flathead Reservation				
Fort Belknap Indian Reservation		Unclassifiable/Attainment		
Blaine County (part) area inside Fort Belknap Reservation				
Phillips County (part) area inside Fort Belknap Reservation				
Fort Peck Indian Reservation		Unclassifiable/Attainment		
Daniels County (part) area inside Fort Peck Reservation				
Roosevelt County (part) area inside Fort Peck Reservation				
Sheridan County (part) area inside Fort Peck Reservation				
Valley County (part) area inside Fort Peck Reservation				
Northern Cheyenne Indian Reservation		Unclassifiable/Attainment		

Montana—Ozone (1-Hour Standard)[2]

Designated area	Designation		Classification	
	Date [1]	Type	Date [1]	Type
Bighorn County (part) area inside Northern Cheyenne Reservation Rosebud County (part) area inside Northern Cheyenne Reservation Rocky Boy Indian Reservation Chouteau County (part) area inside Rocky Boy Reservation Hill County (part) area inside Rocky Boy Reservation	.....	Unclassifiable/Attainment		

[1] This date is October 18, 2000, unless otherwise noted.
[2] The 1-hour ozone standard is revoked effective June 15, 2005 for all areas in Montana.

Montana—PM–10

Designated Area	Designation		Classification	
	Date	Type	Date	Type
Cascade County, Great Falls area	11/15/90	Unclassifiable		
Flathead County:				
The area bounded by lines from Universal Transmercator (UTM) coordinate 700000mE, 5347000mN, east to 704000mE, 5347000mN, south to 704000mE, 5341000mN, west to 703000mE, 5341000mN, south to 703000mE, 5340000mN, west to 702000mE, 5340000mN, south to 702000mE, 5339000mN, east to 703000mE, 5339000mN, south to 703000mE, 5338000mN, east to 704000mE, 5338000mN, south to 704000mE, 5336000mN, west to 702000mE, 5336000mN, south to 702000mE, 5335000mN, west to 700000mE, 5335000mN, north to 700000mE, 5340000mN, west to 695000mE, 5340000mN, north to 695000mE, 5345000mN, east to 700000mE, 5345000mN, north to 700000mE, 5347000mN.	11/15/90	Nonattainment	11/15/90	Moderate.
Columbia Falls and vicinity	11/15/90	Nonattainment	11/15/90	Moderate.
Township T30N, R20W—Sections 7, 8, 9, 16, 17, and 18				
The City of Whitefish and surrounding vicinity bounded by lines from Universal Transmercator (UTM) coordinates 695000 mE, 5370000 mN, east to 699000 mE, 5370000 mN, south to 699000 mE, 5361000 mN, west to 695000 mN, 5361000 mN, and north to 695000 mE, 5370000 mN.	11/18/93	Nonattainment	11/18/93	Moderate.
Lake County, Ronan, Polson	11/15/90	Nonattainment	11/15/90	Moderate.
Lincoln County, Libby and vicinity	11/15/90	Nonattainment	11/15/90	Moderate.
T30N, R31W—Sections 2, 3, 4, 5, 9, 10, 11, 14, 15, 23, 26, 35, and west ½ of Section 24, west ½ of Section 25, and west ½ of Section 36; plus T31N, R31W—Sections 26, 27, 29, 32, 33, 34, 35 and the east ½ of Section 30.				
Lewis and Clark County, East Helena area	11/15/90	Unclassifiable		
Missoula County, Missoula and vicinity including the following sections:	11/15/90	Nonattainment	11/15/90	Moderate.
T13N, R19W—2, 8, 11, 14, 15, 16, 17, 19, 20, 21, 22, 23, 24, 27, 28, 29, 30, 31, 32, 33, and 34; T12N, R19W—Sections 4, 5, 6, 7; T13N, R20W—Sections 23, 24, 25, 26, 35, and 36.				
Rosebud County:				
Lame Deer	11/15/90	Nonattainment	11/15/90	Moderate.
Colstrip area	11/15/90	Unclassifiable		
Sanders County (part)	1/20/94	Nonattainment	1/20/94	Moderate.
Thompson Falls and vicinity: Including the following Sections: R29W, T21N—Sections 5, 6, 7, 8, 9, 10, 15, and 16.				
Silver Bow County, Butte	11/15/90	Nonattainment	11/15/90	Moderate.

Montana—PM–10

Designated Area	Designation		Classification	
	Date	Type	Date	Type
The following area of Butte-Silver Bow excluding the territorial limits of the City of Walkerville: Beginning at the Northwest corner of Section 2, T.3N., R.8W., thence Easterly to Northeast corner Section 5, T.3N., R.7W.; then Southerly to Northwest corner Section 9, T.3N., R.7W.; thence Easterly to Northeast corner Section 10, T.3N., R.7W.; thence Southerly to Southeast corner Section 22, T.2N., R.7W.; thence Westerly to Southwest corner Section 19, T.2N., R.7W.; thence Northerly to Northwest corner Section 19, T.2N., R.7W.; thence Westerly to Southwest corner Section 14, T.2N., R.8W.; thence Northerly to Southwest corner Section 35, T.3N., R.8W.; thence Westerly to Southwest corner Section 34, T.3N., R.8W.; thence Northerly to Northwest corner Section 27, T.3N., R.8W.; thence Westerly to Southwest corner Section 20, T.3N., R.8W.; thence Northerly to Northwest corner Section 17, T.3N., R.8W.; thence Easterly to Northwest corner Section 14, T.3N., R.8W.; thence Northerly to the point of beginning.				
Yellowstone County, Billings area	11/15/90	Unclassifiable		
Rest of State[1]	11/15/90	Unclassifiable		

[1] Denotes a single area designation for PSD baseline area purposes.

Montana—NO_2 (1971 Annual Standard)

Designated area	Does not meet primary standards	Cannot be classified or better than national standards
Entire State		X

Montana—NO_2 (2010 1-Hour Standard)

Designated area	Designation [a]	
	Date [1]	Type
Beaverhead County		Unclassifiable/Attainment.
Big Horn County		Unclassifiable/Attainment.
Blaine County		Unclassifiable/Attainment.
Broadwater County		Unclassifiable/Attainment.
Carbon County		Unclassifiable/Attainment.
Carter County		Unclassifiable/Attainment.
Cascade County		Unclassifiable/Attainment.
Chouteau County		Unclassifiable/Attainment.
Custer County		Unclassifiable/Attainment.
Daniels County		Unclassifiable/Attainment.
Dawson County		Unclassifiable/Attainment.
Deer Lodge County		Unclassifiable/Attainment.
Fallon County		Unclassifiable/Attainment.
Fergus County		Unclassifiable/Attainment.
Flathead County		Unclassifiable/Attainment.
Gallatin County		Unclassifiable/Attainment.
Garfield County		Unclassifiable/Attainment.
Glacier County		Unclassifiable/Attainment.
Golden Valley County		Unclassifiable/Attainment.
Granite County		Unclassifiable/Attainment.
Hill County		Unclassifiable/Attainment.
Jefferson County		Unclassifiable/Attainment.
Judith Basin County		Unclassifiable/Attainment.
Lake County		Unclassifiable/Attainment.
Lewis and Clark County		Unclassifiable/Attainment.
Liberty County		Unclassifiable/Attainment.
Lincoln County		Unclassifiable/Attainment.
McCone County		Unclassifiable/Attainment.
Madison County		Unclassifiable/Attainment.
Meagher County		Unclassifiable/Attainment.
Mineral County		Unclassifiable/Attainment.
Missoula County		Unclassifiable/Attainment.
Musselshell County		Unclassifiable/Attainment.

Montana—NO_2 (2010 1-Hour Standard)

Designated area	Designation [a]	
	Date [1]	Type
Park County		Unclassifiable/Attainment.
Petroleum County		Unclassifiable/Attainment.
Phillips County		Unclassifiable/Attainment.
Pondera County		Unclassifiable/Attainment.
Powder River County		Unclassifiable/Attainment.
Powell County		Unclassifiable/Attainment.
Prairie County		Unclassifiable/Attainment.
Ravalli County		Unclassifiable/Attainment.
Richland County		Unclassifiable/Attainment.
Roosevelt County		Unclassifiable/Attainment.
Rosebud County		Unclassifiable/Attainment.
Sanders County		Unclassifiable/Attainment.
Sheridan County		Unclassifiable/Attainment.
Silver Bow County		Unclassifiable/Attainment.
Stillwater County		Unclassifiable/Attainment.
Sweet Grass County		Unclassifiable/Attainment.
Teton County		Unclassifiable/Attainment.
Toole County		Unclassifiable/Attainment.
Treasure County		Unclassifiable/Attainment.
Valley County		Unclassifiable/Attainment.
Wheatland County		Unclassifiable/Attainment.
Wibaux County		Unclassifiable/Attainment.
Yellowstone County		Unclassifiable/Attainment.

[a] Includes Indian Country located in each county or area, except as otherwise specified.
[1] This date is 90 days after October 31, 2011, unless otherwise noted.

Montana—Ozone (8-Hour Standard)

Designated area	Designation [a]		Category/classification	
	Date [1]	Type	Date [1]	Type
Statewide:				
Beaverhead County		Unclassifiable/Attainment		
Big Horn County		Unclassifiable/Attainment		
Blaine County		Unclassifiable/Attainment		
Broadwater County		Unclassifiable/Attainment		
Carbon County		Unclassifiable/Attainment		
Carter County		Unclassifiable/Attainment		
Cascade County		Unclassifiable/Attainment		
Chouteau County		Unclassifiable/Attainment		
Custer County		Unclassifiable/Attainment		
Daniels County		Unclassifiable/Attainment		
Dawson County		Unclassifiable/Attainment		
Deer Lodge County		Unclassifiable/Attainment		
Fallon County		Unclassifiable/Attainment		
Fergus County		Unclassifiable/Attainment		
Flathead County		Unclassifiable/Attainment		
Gallatin County		Unclassifiable/Attainment		
Garfield County		Unclassifiable/Attainment		
Glacier County		Unclassifiable/Attainment		
Golden Valley County		Unclassifiable/Attainment		
Granite County.		Unclassifiable/Attainment		
Hill County		Unclassifiable/Attainment		
Jefferson County		Unclassifiable/Attainment		
Judith Basin County		Unclassifiable/Attainment		
Lake County		Unclassifiable/Attainment		
Lewis and Clark County		Unclassifiable/Attainment		
Liberty County		Unclassifiable/Attainment		
Lincoln County		Unclassifiable/Attainment		
Madison County		Unclassifiable/Attainment		
McCone County		Unclassifiable/Attainment		
Meagher County		Unclassifiable/Attainment		
Mineral County		Unclassifiable/Attainment		
Missoula County		Unclassifiable/Attainment		
Musselshell County		Unclassifiable/Attainment		
Park County		Unclassifiable/Attainment		
Petroleum County		Unclassifiable/Attainment		
Phillips County		Unclassifiable/Attainment		
Pondera County		Unclassifiable/Attainment		
Powder River County		Unclassifiable/Attainment		

Montana—Ozone (8-Hour Standard)

Designated area	Designation [a]		Category/classification	
	Date [1]	Type	Date [1]	Type
Powell County		Unclassifiable/Attainment		
Prairie County		Unclassifiable/Attainment		
Ravalli County		Unclassifiable/Attainment		
Richland County		Unclassifiable/Attainment		
Roosevelt County		Unclassifiable/Attainment		
Rosebud County		Unclassifiable/Attainment		
Sanders County		Unclassifiable/Attainment		
Sheridan County		Unclassifiable/Attainment		
Silver Bow County		Unclassifiable/Attainment		
Stillwater County		Unclassifiable/Attainment		
Sweet Grass County		Unclassifiable/Attainment		
Teton County		Unclassifiable/Attainment		
Toole County		Unclassifiable/Attainment		
Treasure County		Unclassifiable/Attainment		
Valley County		Unclassifiable/Attainment		
Wheatland County		Unclassifiable/Attainment		
Wibaux County		Unclassifiable/Attainment		
Yellowstone County		Unclassifiable/Attainment		
Yellowstone Natl Park		Unclassifiable/Attainment		

[a] Includes Indian Country located in each county or area, except as otherwise specified.
[1] This date is June 15, 2004, unless otherwise noted.

Montana—$PM_{2.5}$ (Annual NAAQS)

Designated area	Designation [a]	
	Date [1]	Type
Libby, MT:		
Lincoln County (part)		Nonattainment.
The area bounded by lines from Universal Transverse Mercador Zone 11 (North American Datum 1983) coordinates beginning at 600,000mE, 5,370,000mN east to 620,000mE, 5370,000mN south to 620,000mE, 5340,000mN west to 600,000mE, 5,340,000mN north to 600,000mE, 5,370,000mN		
Rest of State:		
Beaverhead County		Unclassifiable/Attainment.
Big Horn County		Unclassifiable/Attainment.
Blaine County		Unclassifiable/Attainment.
Broadwater County		Unclassifiable/Attainment.
Carbon County		Unclassifiable/Attainment.
Carter County		Unclassifiable/Attainment.
Cascade County		Unclassifiable/Attainment.
Chouteau County		Unclassifiable/Attainment.
Custer County		Unclassifiable/Attainment.
Daniels County		Unclassifiable/Attainment.
Dawson County		Unclassifiable/Attainment.
Deer Lodge County		Unclassifiable/Attainment.
Fallon County		Unclassifiable/Attainment.
Fergus County		Unclassifiable/Attainment.
Flathead County		Unclassifiable/Attainment.
Gallatin County		Unclassifiable/Attainment.
Garfield County		Unclassifiable/Attainment.
Glacier County		Unclassifiable/Attainment.
Golden Valley County		Unclassifiable/Attainment.
Granite County		Unclassifiable/Attainment.
Hill County		Unclassifiable/Attainment.
Jefferson County		Unclassifiable/Attainment.
Judith Basin County		Unclassifiable/Attainment.
Lake County		Unclassifiable/Attainment.
Lewis and Clark County		Unclassifiable/Attainment.
Liberty County		Unclassifiable/Attainment.
Lincoln County (remainder)		Unclassifiable/Attainment.
McCone County		Unclassifiable/Attainment.
Madison County		Unclassifiable/Attainment.
Meagher County		Unclassifiable/Attainment.
Mineral County		Unclassifiable/Attainment.
Missoula County		Unclassifiable/Attainment.
Musselshell County		Unclassifiable/Attainment.
Park County		Unclassifiable/Attainment.

Montana—$PM_{2.5}$ (Annual NAAQS)

Designated area	Designation [a]	
	Date [1]	Type
Petroleum County		Unclassifiable/Attainment.
Phillips County		Unclassifiable/Attainment.
Pondera County		Unclassifiable/Attainment.
Powder River County		Unclassifiable/Attainment.
Powell County		Unclassifiable/Attainment.
Prairie County		Unclassifiable/Attainment.
Ravalli County		Unclassifiable/Attainment.
Richland County		Unclassifiable/Attainment.
Roosevelt County		Unclassifiable/Attainment.
Rosebud County		Unclassifiable/Attainment.
Sanders County		Unclassifiable/Attainment.
Sheridan County		Unclassifiable/Attainment.
Silver Bow County		Unclassifiable/Attainment.
Stillwater County		Unclassifiable/Attainment.
Sweet Grass County		Unclassifiable/Attainment.
Teton County		Unclassifiable/Attainment.
Toole County		Unclassifiable/Attainment.
Treasure County		Unclassifiable/Attainment.
Valley County		Unclassifiable/Attainment.
Wheatland County		Unclassifiable/Attainment.
Wibaux County		Unclassifiable/Attainment.
Yellowstone County		Unclassifiable/Attainment.

[a] Includes Indian Country located in each county or area, except as otherwise specified.
[1] This date is 90 days after January 5, 2005, unless otherwise noted.

Montana—$PM_{2.5}$ [24-hour NAAQS]

Designated area	Designation for the 1997 NAAQS [a]		Designation for the 2006 NAAQS [a]	
	Date [1]	Type	Date [2]	Type
Statewide:				
Beaverhead County		Unclassifiable/Attainment		Unclassifiable/Attainment.
Big Horn County		Unclassifiable/Attainment		Unclassifiable/Attainment.
Blaine County		Unclassifiable/Attainment		Unclassifiable/Attainment.
Broadwater County		Unclassifiable/Attainment		Unclassifiable/Attainment.
Carbon County		Unclassifiable/Attainment		Unclassifiable/Attainment.
Carter County		Unclassifiable/Attainment		Unclassifiable/Attainment.
Cascade County		Unclassifiable/Attainment		Unclassifiable/Attainment.
Chouteau County		Unclassifiable/Attainment		Unclassifiable/Attainment.
Custer County		Unclassifiable/Attainment		Unclassifiable/Attainment.
Daniels County		Unclassifiable/Attainment		Unclassifiable/Attainment.
Dawson County		Unclassifiable/Attainment		Unclassifiable/Attainment.
Deer Lodge County		Unclassifiable/Attainment		Unclassifiable/Attainment.
Fallon County		Unclassifiable/Attainment		Unclassifiable/Attainment.
Fergus County		Unclassifiable/Attainment		Unclassifiable/Attainment.
Flathead County		Unclassifiable/Attainment		Unclassifiable/Attainment.
Gallatin County		Unclassifiable/Attainment		Unclassifiable/Attainment.
Garfield County		Unclassifiable/Attainment		Unclassifiable/Attainment.
Glacier County		Unclassifiable/Attainment		Unclassifiable/Attainment.
Golden Valley County		Unclassifiable/Attainment		Unclassifiable/Attainment.
Granite County		Unclassifiable/Attainment		Unclassifiable/Attainment.

Montana—$PM_{2.5}$ [24-hour NAAQS]

Designated area	Designation for the 1997 NAAQS [a]		Designation for the 2006 NAAQS [a]	
	Date [1]	Type	Date [2]	Type
Hill County		Unclassifiable/Attainment		Unclassifiable/Attainment.
Jefferson County		Unclassifiable/Attainment		Unclassifiable/Attainment.
Judith Basin County		Unclassifiable/Attainment		Unclassifiable/Attainment.
Lake County		Unclassifiable/Attainment		Unclassifiable/Attainment.
Lewis and Clark County		Unclassifiable/Attainment		Unclassifiable/Attainment.
Liberty County		Unclassifiable/Attainment		Unclassifiable/Attainment.
Lincoln County		Unclassifiable/Attainment		Unclassifiable/Attainment.
McCone County		Unclassifiable/Attainment		Unclassifiable/Attainment.
Madison County		Unclassifiable/Attainment		Unclassifiable/Attainment.
Meagher County		Unclassifiable/Attainment		Unclassifiable/Attainment.
Mineral County		Unclassifiable/Attainment		Unclassifiable/Attainment.
Missoula County		Unclassifiable/Attainment		Unclassifiable/Attainment.
Musselshell County		Unclassifiable/Attainment		Unclassifiable/Attainment.
Park County		Unclassifiable/Attainment		Unclassifiable/Attainment.
Petroleum County		Unclassifiable/Attainment		Unclassifiable/Attainment.
Phillips County		Unclassifiable/Attainment		Unclassifiable/Attainment.
Pondera County		Unclassifiable/Attainment		Unclassifiable/Attainment.
Powder River County		Unclassifiable/Attainment		Unclassifiable/Attainment.
Powell County		Unclassifiable/Attainment		Unclassifiable/Attainment.
Prairie County		Unclassifiable/Attainment		Unclassifiable/Attainment.
Ravalli County		Unclassifiable/Attainment		Unclassifiable/Attainment.
Richland County		Unclassifiable/Attainment		Unclassifiable/Attainment.
Roosevelt County		Unclassifiable/Attainment		Unclassifiable/Attainment.
Rosebud County		Unclassifiable/Attainment		Unclassifiable/Attainment.
Sanders County		Unclassifiable/Attainment		Unclassifiable/Attainment.
Sheridan County		Unclassifiable/Attainment		Unclassifiable/Attainment.
Silver Bow County		Unclassifiable/Attainment		Unclassifiable/Attainment.
Stillwater County		Unclassifiable/Attainment		Unclassifiable/Attainment.
Sweet Grass County		Unclassifiable/Attainment		Unclassifiable/Attainment.
Teton County		Unclassifiable/Attainment		Unclassifiable/Attainment.
Toole County		Unclassifiable/Attainment		Unclassifiable/Attainment.
Treasure County		Unclassifiable/Attainment		Unclassifiable/Attainment.
Valley County		Unclassifiable/Attainment		Unclassifiable/Attainment.
Wheatland County		Unclassifiable/Attainment		Unclassifiable/Attainment.
Wibaux County		Unclassifiable/Attainment		Unclassifiable/Attainment.

Montana—$PM_{2.5}$ [24-hour NAAQS]

Designated area	Designation for the 1997 NAAQS [a]		Designation for the 2006 NAAQS [a]	
	Date [1]	Type	Date [2]	Type
Yellowstone County		Unclassifiable/Attainment		Unclassifiable/Attainment.

[a] Includes Indian Country located in each county or area, except as otherwise specified.
[1] This date is 90 days after January 5, 2005, unless otherwise noted.
[2] This date is 30 days after November 13, 2009, unless otherwise noted.

Montana—2008 Lead NAAQS

Designated area	Designation for the 2008 NAAQS [a]	
	Date [1]	Type
Whole State		Unclassifiable/Attainment.

[a] Includes Indian Country located in each county or area, except as otherwise specified.
[1] December 31, 2011 unless otherwise noted.

[43 FR 8964, Mar. 3, 1978]

EDITORIAL NOTE: For FEDERAL REGISTER citations affecting § 81.327 see the List of CFR Sections Affected, which appears in the Finding Aids section of the printed volume and at *www.fdsys.gov*.

EFFECTIVE DATE NOTE: At 77 FR 30132, May 21, 2012, § 81.327 was amended by revising the table heading for ''Montana—Ozone (8-Hour Standard)'' to read ''Montana—1997 8-Hour Ozone NAAQS (Primary and Secondary)''; by adding a new table entitled ''Montana—2008 8-Hour Ozone NAAQS (Primary and Secondary)'' following the newly designated table ''Montana—1997 8-Hour Ozone NAAQS (Primary and Secondary)'', effective July 20, 2012. For the convenience of the user, the added text is set forth as follows:

§ 81.327 Montana.

* * * * *

Montana—2008 8-Hour Ozone NAAQS (Primary and secondary)

Designated area	Designation		Classification	
	Date [1]	Type	Date [1]	Type
Statewide and Any Areas of Indian Country		Unclassifiable/Attainment		

[1] This date is July 20, 2012, unless otherwise noted.

* * * * *

§ 81.328 Nebraska.

Nebraska—TSP

Designated area	Does not meet primary standards	Does not meet secondary standards	Cannot be classified	Better than national standards
AQCR 085 (Douglas and Sarpy Counties):				
Douglas County:.				
Omaha			X	
Remainder of Douglas County				X
Sarpy County:				
Bellevue			X	
Remainder of Sarpy County				X
AQCR 086			[1] X	
AQCR 145				X
AQCR 146:				
Cass County			X	
Dawson County			[1] X	
Remainder of AQCR 146				X

[1] EPA designation replaces state designation.

Nebraska—SO_2

Designated area	Does not meet primary standards	Does not meet secondary standards	Cannot be classified	Better than national standards
Entire State	.....		.....	X

Nebraska—Carbon Monoxide

Designated Area	Designation		Classification	
	Date [1]	Type	Date [1]	Type
Statewide	.....	Unclassifiable/Attainment		
Adams County				
Antelope County				
Arthur County				
Banner County				
Blaine County				
Boone County				
Box Butte County				
Boyd County				
Brown County				
Buffalo County				
Burt County				
Butler County				
Cass County				
Cedar County				
Chase County				
Cherry County				
Cheyenne County				
Clay County				
Colfax County				
Cuming County				
Custer County				
Dakota County				
Dawes County				
Dawson County				
Deuel County				
Dixon County				
Dodge County				
Douglas County				
Dundy County				
Fillmore County				
Franklin County				
Frontier County				
Furnas County				
Gage County				
Garden County				
Garfield County				
Gosper County				
Grant County				
Greeley County				
Hall County				
Hamilton County				
Harlan County				
Hayes County				
Hitchcock County				
Holt County				
Hooker County				
Howard County				
Jefferson County				
Johnson County				
Kearney County				
Keith County				
Keya Paha County				
Kimball County				
Knox County				
Lancaster County				
Lincoln County				
Logan County				
Loup County				
Madison County				
McPherson County				
Merrick County				

Nebraska—Carbon Monoxide

Designated Area	Designation		Classification	
	Date [1]	Type	Date [1]	Type
Morrill County				
Nance County				
Nemaha County				
Nuckolls County				
Otoe County				
Pawnee County				
Perkins County				
Phelps County				
Pierce County				
Platte County				
Polk County				
Red Willow County				
Richardson County				
Rock County				
Saline County				
Sarpy County				
Saunders County				
Scotts Bluff County				
Seward County				
Sheridan County				
Sherman County				
Sioux County				
Stanton County				
Thayer County				
Thomas County				
Thurston County				
Valley County				
Washington County				
Wayne County				
Webster County				
Wheeler County				
York County				

[1] This date is November 15, 1990, unless otherwise noted.

Nebraska—1978 Lead NAAQS

Designated area	Designation		Classification	
	Date	Type	Date	Type
Douglas County (part): Portion of city of Omaha bounded by: Jones Street on the south, Eleventh Street on the west, Avenue H and the Nebraska-Iowa border on the north, and the Missouri River on the east.	4/20/01	Attainment		

Nebraska—Ozone (1-Hour Standard)[2]

Designated area	Designation		Classification	
	Date [1]	Type	Date [1]	Type
Statewide	.....	Unclassifiable/Attainment		
Adams County				
Antelope County				
Arthur County				
Banner County				
Blaine County				
Boone County				
Box Butte County				
Boyd County				
Brown County				
Buffalo County				
Burt County				
Butler County				
Cass County				
Cedar County				
Chase County				
Cherry County				
Cheyenne County				
Clay County				

Nebraska—Ozone (1-Hour Standard)[2]

Designated area	Designation		Classification	
	Date [1]	Type	Date [1]	Type
Colfax County				
Cuming County				
Custer County				
Dakota County				
Dawes County				
Dawson County				
Deuel County				
Dixon County				
Dodge County				
Douglas County				
Dundy County				
Fillmore County				
Franklin County				
Frontier County				
Furnas County				
Gage County				
Garden County				
Garfield County				
Gosper County				
Grant County				
Greeley County				
Hall County				
Hamilton County				
Harlan County				
Hayes County				
Hitchcock County				
Holt County				
Hooker County				
Howard County				
Jefferson County				
Johnson County				
Kearney County				
Keith County				
Keya Paha County				
Kimball County				
Knox County				
Lancaster County				
Lincoln County				
Logan County				
Loup County				
Madison County				
McPherson County				
Merrick County				
Morrill County				
Nance County				
Nemaha County				
Nuckolls County				
Otoe County				
Pawnee County				
Perkins County				
Phelps County				
Pierce County				
Platte County				
Polk County				
Red Willow County				
Richardson County				
Rock County				
Saline County				
Sarpy County				
Saunders County				
Scotts Bluff County				
Seward County				
Sheridan County				
Sherman County				
Sioux County				
Stanton County				
Thayer County				
Thomas County				
Thurston County				
Valley County				
Washington County				

Nebraska—Ozone (1-Hour Standard)[2]

Designated area	Designation		Classification	
	Date [1]	Type	Date [1]	Type
Wayne County Webster County Wheeler County York County				

[1] This date is October 18, 2000, unless otherwise noted.
[2] The 1-hour ozone standard is revoked effective June 15, 2005 for all areas in Nebraska.

Nebraska—NO_2 (1971 Annual Standard)

Designated area	Does not meet primary standards	Cannot be classified or better than national standards
Entire State		X

Nebraska—NO_2 (2010 1-Hour Standard)

Designated area	Designation [a]	
	Date [1]	Type
Adams County		Unclassifiable/Attainment.
Antelope County		Unclassifiable/Attainment.
Arthur County		Unclassifiable/Attainment.
Banner County		Unclassifiable/Attainment.
Blaine County		Unclassifiable/Attainment.
Boone County		Unclassifiable/Attainment.
Box Butte County		Unclassifiable/Attainment.
Boyd County		Unclassifiable/Attainment.
Brown County		Unclassifiable/Attainment.
Buffalo County		Unclassifiable/Attainment.
Burt County		Unclassifiable/Attainment.
Butler County		Unclassifiable/Attainment.
Cass County		Unclassifiable/Attainment.
Cedar County		Unclassifiable/Attainment.
Chase County		Unclassifiable/Attainment.
Cherry County		Unclassifiable/Attainment.
Cheyenne County		Unclassifiable/Attainment.
Clay County		Unclassifiable/Attainment.
Colfax County		Unclassifiable/Attainment.
Cuming County		Unclassifiable/Attainment.
Custer County		Unclassifiable/Attainment.
Dakota County		Unclassifiable/Attainment.
Dawes County		Unclassifiable/Attainment.
Dawson County		Unclassifiable/Attainment.
Deuel County		Unclassifiable/Attainment.
Dixon County		Unclassifiable/Attainment.
Dodge County		Unclassifiable/Attainment.
Douglas County		Unclassifiable/Attainment.
Dundy County		Unclassifiable/Attainment.
Fillmore County		Unclassifiable/Attainment.
Franklin County		Unclassifiable/Attainment.
Frontier County		Unclassifiable/Attainment.
Furnas County		Unclassifiable/Attainment.
Gage County		Unclassifiable/Attainment.
Garden County		Unclassifiable/Attainment.
Garfield County		Unclassifiable/Attainment.
Gosper County		Unclassifiable/Attainment.
Grant County		Unclassifiable/Attainment.
Greeley County		Unclassifiable/Attainment.
Hall County		Unclassifiable/Attainment.
Hamilton County		Unclassifiable/Attainment.
Harlan County		Unclassifiable/Attainment.
Hayes County		Unclassifiable/Attainment.
Hitchcock County		Unclassifiable/Attainment.
Holt County		Unclassifiable/Attainment.
Hooker County		Unclassifiable/Attainment.
Howard County		Unclassifiable/Attainment.
Jefferson County		Unclassifiable/Attainment.
Johnson County		Unclassifiable/Attainment.

Nebraska—NO_2 (2010 1-Hour Standard)

Designated area	Designation [a]	
	Date [1]	Type
Kearney County		Unclassifiable/Attainment.
Keith County		Unclassifiable/Attainment.
Keya Paha County		Unclassifiable/Attainment.
Kimball County		Unclassifiable/Attainment.
Knox County		Unclassifiable/Attainment.
Lancaster County		Unclassifiable/Attainment.
Lincoln County		Unclassifiable/Attainment.
Logan County		Unclassifiable/Attainment.
Loup County		Unclassifiable/Attainment.
McPherson County		Unclassifiable/Attainment.
Madison County		Unclassifiable/Attainment.
Merrick County		Unclassifiable/Attainment.
Morrill County		Unclassifiable/Attainment.
Nance County		Unclassifiable/Attainment.
Nemaha County		Unclassifiable/Attainment.
Nuckolls County		Unclassifiable/Attainment.
Otoe County		Unclassifiable/Attainment.
Pawnee County		Unclassifiable/Attainment.
Perkins County		Unclassifiable/Attainment.
Phelps County		Unclassifiable/Attainment.
Pierce County		Unclassifiable/Attainment.
Platte County		Unclassifiable/Attainment.
Polk County		Unclassifiable/Attainment.
Red Willow County		Unclassifiable/Attainment.
Richardson County		Unclassifiable/Attainment.
Rock County		Unclassifiable/Attainment.
Saline County		Unclassifiable/Attainment.
Sarpy County		Unclassifiable/Attainment.
Saunders County		Unclassifiable/Attainment.
Scotts Bluff County		Unclassifiable/Attainment.
Seward County		Unclassifiable/Attainment.
Sheridan County		Unclassifiable/Attainment.
Sherman County		Unclassifiable/Attainment.
Sioux County		Unclassifiable/Attainment.
Stanton County		Unclassifiable/Attainment.
Thayer County		Unclassifiable/Attainment.
Thomas County		Unclassifiable/Attainment.
Thurston County		Unclassifiable/Attainment.
Valley County		Unclassifiable/Attainment.
Washington County		Unclassifiable/Attainment.
Wayne County		Unclassifiable/Attainment.
Webster County		Unclassifiable/Attainment.
Wheeler County		Unclassifiable/Attainment.
York County		Unclassifiable/Attainment.

[a] Includes Indian Country located in each county or area, except as otherwise specified.
[1] This date is 90 days after October 31, 2011, unless otherwise noted.

Nebraska—Ozone (8-Hour Standard)

Designated area	Designation [a]		Category/classification	
	Date [1]	Type	Date [1]	Type
Statewide:		Unclassifiable/Attainment		
Adams County				
Antelope County				
Arthur County				
Banner County				
Blaine County				
Boone County				
Box Butte County				
Boyd County				
Brown County				
Buffalo County				
Burt County				
Butler County				
Cass County				
Cedar County				
Chase County				
Cherry County				
Cheyenne County				

Nebraska—Ozone (8-Hour Standard)

Designated area	Designation [a]		Category/classification	
	Date [1]	Type	Date [1]	Type
Clay County				
Colfax County				
Cuming County				
Custer County				
Dakota County				
Dawes County				
Dawson County				
Deuel County				
Dixon County				
Dodge County				
Douglas County				
Dundy County				
Fillmore County				
Franklin County				
Frontier County				
Furnas County				
Gage County				
Garden County				
Garfield County				
Gosper County				
Grant County				
Greeley County				
Hall County				
Hamilton County				
Harlan County				
Hayes County				
Hitchcock County				
Holt County				
Hooker County				
Howard County				
Jefferson County				
Johnson County				
Kearney County				
Keith County				
Keya Paha County				
Kimball County				
Knox County				
Lancaster County				
Lincoln County				
Logan County				
Loup County				
Madison County				
McPherson County				
Merrick County				
Morrill County				
Nance County				
Nemaha County				
Nuckolls County				
Otoe County				
Pawnee County				
Perkins County				
Phelps County				
Pierce County				
Platte County				
Polk County				
Red Willow County				
Richardson County				
Rock County				
Saline County				
Sarpy County				
Saunders County				
Scotts Bluff County				
Seward County				
Sheridan County				
Sherman County				
Sioux County				
Stanton County				
Thayer County				
Thomas County				
Thurston County				
Valley County				

Nebraska—Ozone (8-Hour Standard)

Designated area	Designation [a]		Category/classification	
	Date [1]	Type	Date [1]	Type
Washington County				
Wayne County				
Webster County				
Wheeler County				
York County				

[a] Includes Indian Country located in each county or area, except as otherwise specified.
[1] This date is June 15, 2004, unless otherwise noted.

Nebraska—$PM_{2.5}$ (Annual NAAQS)

Designated area	Designation [a]	
	Date [1]	Type
Statewide:		
Adams County		Unclassifiable/Attainment.
Antelope County		Unclassifiable/Attainment.
Arthur County		Unclassifiable/Attainment.
Banner County		Unclassifiable/Attainment.
Blaine County		Unclassifiable/Attainment.
Boone County		Unclassifiable/Attainment.
Box Butte County		Unclassifiable/Attainment.
Boyd County		Unclassifiable/Attainment.
Brown County		Unclassifiable/Attainment.
Buffalo County		Unclassifiable/Attainment.
Burt County		Unclassifiable/Attainment.
Butler County		Unclassifiable/Attainment.
Cass County		Unclassifiable/Attainment.
Cedar County		Unclassifiable/Attainment.
Chase County		Unclassifiable/Attainment.
Cherry County		Unclassifiable/Attainment.
Cheyenne County		Unclassifiable/Attainment.
Clay County		Unclassifiable/Attainment.
Colfax County		Unclassifiable/Attainment.
Cuming County		Unclassifiable/Attainment.
Custer County		Unclassifiable/Attainment.
Dakota County		Unclassifiable/Attainment.
Dawes County		Unclassifiable/Attainment.
Dawson County		Unclassifiable/Attainment.
Deuel County		Unclassifiable/Attainment.
Dixon County		Unclassifiable/Attainment.
Dodge County		Unclassifiable/Attainment.
Douglas County		Unclassifiable/Attainment.
Dundy County		Unclassifiable/Attainment.
Fillmore County		Unclassifiable/Attainment.
Franklin County		Unclassifiable/Attainment.
Frontier County		Unclassifiable/Attainment.
Furnas County		Unclassifiable/Attainment.
Gage County		Unclassifiable/Attainment.
Garden County		Unclassifiable/Attainment.
Garfield County		Unclassifiable/Attainment.
Gosper County		Unclassifiable/Attainment.
Grant County		Unclassifiable/Attainment.
Greeley County		Unclassifiable/Attainment.
Hall County		Unclassifiable/Attainment.
Hamilton County		Unclassifiable/Attainment.
Harlan County		Unclassifiable/Attainment.
Hayes County		Unclassifiable/Attainment.
Hitchcock County		Unclassifiable/Attainment.
Holt County		Unclassifiable/Attainment.
Hooker County		Unclassifiable/Attainment.
Howard County		Unclassifiable/Attainment.
Jefferson County		Unclassifiable/Attainment.
Johnson County		Unclassifiable/Attainment.
Kearney County		Unclassifiable/Attainment.
Keith County		Unclassifiable/Attainment.
Keya Paha County		Unclassifiable/Attainment.
Kimball County		Unclassifiable/Attainment.
Knox County		Unclassifiable/Attainment.
Lancaster County		Unclassifiable/Attainment.
Lincoln County		Unclassifiable/Attainment.

Nebraska—$PM_{2.5}$ (Annual NAAQS)

Designated area	Designation [a]	
	Date [1]	Type
Logan County		Unclassifiable/Attainment.
Loup County		Unclassifiable/Attainment.
McPherson County		Unclassifiable/Attainment.
Madison County		Unclassifiable/Attainment.
Merrick County		Unclassifiable/Attainment.
Morrill County		Unclassifiable/Attainment.
Nance County		Unclassifiable/Attainment.
Nemaha County		Unclassifiable/Attainment.
Nuckolls County		Unclassifiable/Attainment.
Otoe County		Unclassifiable/Attainment.
Pawnee County		Unclassifiable/Attainment.
Perkins County		Unclassifiable/Attainment.
Phelps County		Unclassifiable/Attainment.
Pierce County		Unclassifiable/Attainment.
Platte County		Unclassifiable/Attainment.
Polk County		Unclassifiable/Attainment.
Red Willow County		Unclassifiable/Attainment.
Richardson County		Unclassifiable/Attainment.
Rock County		Unclassifiable/Attainment.
Saline County		Unclassifiable/Attainment.
Sarpy County		Unclassifiable/Attainment.
Saunders County		Unclassifiable/Attainment.
Scotts Bluff County		Unclassifiable/Attainment.
Seward County		Unclassifiable/Attainment.
Sheridan County		Unclassifiable/Attainment.
Sherman County		Unclassifiable/Attainment.
Sioux County		Unclassifiable/Attainment.
Stanton County		Unclassifiable/Attainment.
Thayer County		Unclassifiable/Attainment.
Thomas County		Unclassifiable/Attainment.
Thurston County		Unclassifiable/Attainment.
Valley County		Unclassifiable/Attainment.
Washington County		Unclassifiable/Attainment.
Wayne County		Unclassifiable/Attainment.
Webster County		Unclassifiable/Attainment.
Wheeler County		Unclassifiable/Attainment.
York County		Unclassifiable/Attainment.

[a] Includes Indian Country located in each county or area, except as otherwise specified.
[1] This date is 90 days after January 5, 2005, unless otherwise noted.

Nebraska—$PM_{2.5}$ [24-hour NAAQS]

Designated area	Designation for the 1997 NAAQS [a]		Designation for the 2006 NAAQS [a]	
	Date [1]	Type	Date [2]	Type
Statewide:				
Adams County		Unclassifiable/Attainment		Unclassifiable/Attainment.
Antelope County		Unclassifiable/Attainment		Unclassifiable/Attainment.
Arthur County		Unclassifiable/Attainment		Unclassifiable/Attainment.
Banner County		Unclassifiable/Attainment		Unclassifiable/Attainment.
Blaine County		Unclassifiable/Attainment		Unclassifiable/Attainment.
Boone County		Unclassifiable/Attainment		Unclassifiable/Attainment.
Box Butte County		Unclassifiable/Attainment		Unclassifiable/Attainment.
Boyd County		Unclassifiable/Attainment		Unclassifiable/Attainment.
Brown County		Unclassifiable/Attainment		Unclassifiable/Attainment.
Buffalo County		Unclassifiable/Attainment		Unclassifiable/Attainment.
Burt County		Unclassifiable/Attainment		Unclassifiable/Attainment.
Butler County		Unclassifiable/Attainment		Unclassifiable/Attainment.

Nebraska—$PM_{2.5}$ [24-hour NAAQS]

Designated area	Designation for the 1997 NAAQS [a]		Designation for the 2006 NAAQS [a]	
	Date [1]	Type	Date [2]	Type
Cass County		Unclassifiable/Attainment		Unclassifiable/Attainment.
Cedar County		Unclassifiable/Attainment		Unclassifiable/Attainment.
Chase County		Unclassifiable/Attainment		Unclassifiable/Attainment.
Cherry County		Unclassifiable/Attainment		Unclassifiable/Attainment.
Cheyenne County		Unclassifiable/Attainment		Unclassifiable/Attainment.
Clay County		Unclassifiable/Attainment		Unclassifiable/Attainment.
Colfax County		Unclassifiable/Attainment		Unclassifiable/Attainment.
Cuming County		Unclassifiable/Attainment		Unclassifiable/Attainment.
Custer County		Unclassifiable/Attainment		Unclassifiable/Attainment.
Dakota County		Unclassifiable/Attainment		Unclassifiable/Attainment.
Dawes County		Unclassifiable/Attainment		Unclassifiable/Attainment.
Dawson County		Unclassifiable/Attainment		Unclassifiable/Attainment.
Deuel County		Unclassifiable/Attainment		Unclassifiable/Attainment.
Dixon County		Unclassifiable/Attainment		Unclassifiable/Attainment.
Dodge County		Unclassifiable/Attainment		Unclassifiable/Attainment.
Douglas County		Unclassifiable/Attainment		Unclassifiable/Attainment.
Dundy County		Unclassifiable/Attainment		Unclassifiable/Attainment.
Fillmore County		Unclassifiable/Attainment		Unclassifiable/Attainment.
Franklin County		Unclassifiable/Attainment		Unclassifiable/Attainment.
Frontier County		Unclassifiable/Attainment		Unclassifiable/Attainment.
Furnas County		Unclassifiable/Attainment		Unclassifiable/Attainment.
Gage County		Unclassifiable/Attainment		Unclassifiable/Attainment.
Garden County		Unclassifiable/Attainment		Unclassifiable/Attainment.
Garfield County		Unclassifiable/Attainment		Unclassifiable/Attainment.
Gosper County		Unclassifiable/Attainment		Unclassifiable/Attainment.
Grant County		Unclassifiable/Attainment		Unclassifiable/Attainment.
Greeley County		Unclassifiable/Attainment		Unclassifiable/Attainment.
Hall County		Unclassifiable/Attainment		Unclassifiable/Attainment.
Hamilton County		Unclassifiable/Attainment		Unclassifiable/Attainment.
Harlan County		Unclassifiable/Attainment		Unclassifiable/Attainment.
Hayes County		Unclassifiable/Attainment		Unclassifiable/Attainment.
Hitchcock County		Unclassifiable/Attainment		Unclassifiable/Attainment.
Holt County		Unclassifiable/Attainment		Unclassifiable/Attainment.
Hooker County		Unclassifiable/Attainment		Unclassifiable/Attainment.
Howard County		Unclassifiable/Attainment		Unclassifiable/Attainment.

Nebraska—$PM_{2.5}$ [24-hour NAAQS]

Designated area	Designation for the 1997 NAAQS [a]		Designation for the 2006 NAAQS [a]	
	Date [1]	Type	Date [2]	Type
Jefferson County		Unclassifiable/Attainment		Unclassifiable/Attainment.
Johnson County		Unclassifiable/Attainment		Unclassifiable/Attainment.
Kearney County		Unclassifiable/Attainment		Unclassifiable/Attainment.
Keith County		Unclassifiable/Attainment		Unclassifiable/Attainment.
Keya Paha County		Unclassifiable/Attainment		Unclassifiable/Attainment.
Kimball County		Unclassifiable/Attainment		Unclassifiable/Attainment.
Knox County		Unclassifiable/Attainment		Unclassifiable/Attainment.
Lancaster County		Unclassifiable/Attainment		Unclassifiable/Attainment.
Lincoln County		Unclassifiable/Attainment		Unclassifiable/Attainment.
Logan County		Unclassifiable/Attainment		Unclassifiable/Attainment.
Loup County		Unclassifiable/Attainment		Unclassifiable/Attainment.
McPherson County		Unclassifiable/Attainment		Unclassifiable/Attainment.
Madison County		Unclassifiable/Attainment		Unclassifiable/Attainment.
Merrick County		Unclassifiable/Attainment		Unclassifiable/Attainment.
Morrill County		Unclassifiable/Attainment		Unclassifiable/Attainment.
Nance County		Unclassifiable/Attainment		Unclassifiable/Attainment.
Nemaha County		Unclassifiable/Attainment		Unclassifiable/Attainment.
Nuckolls County		Unclassifiable/Attainment		Unclassifiable/Attainment.
Otoe County		Unclassifiable/Attainment		Unclassifiable/Attainment.
Pawnee County		Unclassifiable/Attainment		Unclassifiable/Attainment.
Perkins County		Unclassifiable/Attainment		Unclassifiable/Attainment.
Phelps County		Unclassifiable/Attainment		Unclassifiable/Attainment.
Pierce County		Unclassifiable/Attainment		Unclassifiable/Attainment.
Platte County		Unclassifiable/Attainment		Unclassifiable/Attainment.
Polk County		Unclassifiable/Attainment		Unclassifiable/Attainment.
Red Willow County		Unclassifiable/Attainment		Unclassifiable/Attainment.
Richardson County		Unclassifiable/Attainment		Unclassifiable/Attainment.
Rock County		Unclassifiable/Attainment		Unclassifiable/Attainment.
Saline County		Unclassifiable/Attainment		Unclassifiable/Attainment.
Sarpy County		Unclassifiable/Attainment		Unclassifiable/Attainment.
Saunders County		Unclassifiable/Attainment		Unclassifiable/Attainment.
Scotts Bluff County		Unclassifiable/Attainment		Unclassifiable/Attainment.
Seward County		Unclassifiable/Attainment		Unclassifiable/Attainment.
Sheridan County		Unclassifiable/Attainment		Unclassifiable/Attainment.
Sherman County		Unclassifiable/Attainment		Unclassifiable/Attainment.

Nebraska—$PM_{2.5}$ [24-hour NAAQS]

Designated area	Designation for the 1997 NAAQS [a]		Designation for the 2006 NAAQS [a]	
	Date [1]	Type	Date [2]	Type
Sioux County		Unclassifiable/Attainment		Unclassifiable/Attainment.
Stanton County		Unclassifiable/Attainment		Unclassifiable/Attainment.
Thayer County		Unclassifiable/Attainment		Unclassifiable/Attainment.
Thomas County		Unclassifiable/Attainment		Unclassifiable/Attainment.
Thurston County		Unclassifiable/Attainment		Unclassifiable/Attainment.
Valley County		Unclassifiable/Attainment		Unclassifiable/Attainment.
Washington County		Unclassifiable/Attainment		Unclassifiable/Attainment.
Wayne County		Unclassifiable/Attainment		Unclassifiable/Attainment.
Webster County		Unclassifiable/Attainment		Unclassifiable/Attainment.
Wheeler County		Unclassifiable/Attainment		Unclassifiable/Attainment.
York County		Unclassifiable/Attainment		Unclassifiable/Attainment.

[a] Includes Indian Country located in each county or area, except as otherwise specified.
[1] This date is 90 days after January 5, 2005, unless otherwise noted.
[2] This date is 30 days after November 13, 2009, unless otherwise noted.

Nebraska—2008 Lead NAAQS

Designated area	Designation for the 2008 NAAQS [a]	
	Date [1]	Type
Whole State		Unclassifiable/Attainment.

[a] Includes Indian Country located in each county or area, except as otherwise specified.
[1] December 31, 2011 unless otherwise noted.

[43 FR 8964, Mar. 3, 1978]

EDITORIAL NOTE: For FEDERAL REGISTER citations affecting § 81.328 see the List of CFR Sections Affected, which appears in the Finding Aids section of the printed volume and at *www.fdsys.gov*.

EFFECTIVE DATE NOTE: At 77 FR 30133, May 21, 2012, § 81.328 was amended by revising the table heading for ''Nebraska—Ozone (8-Hour Standard)'' to read ''Nebraska—1997 8-Hour Ozone NAAQS (Primary and Secondary); by adding a new table entitled ''Nebraska—2008 8-Hour Ozone NAAQS (Primary and Secondary)'' following the newly designated table ''Nebraska—1997 8-Hour Ozone NAAQS (Primary and Secondary)'', effective July 20, 2012. For the convenience of the user, the added text is set forth as follows:

§ 81.328 Nebraska.

* * * * *

Nebraska—2008 8-Hour Ozone NAAQS (Primary and secondary)

Designated area	Designation		Classification	
	Date [1]	Type	Date [1]	Type
Statewide: [2]		Unclassifiable/Attainment		
Adams County				
Antelope County				
Arthur County				
Banner County				
Blaine County				
Boone County				
Box Butte County				
Boyd County				
Brown County				
Buffalo County				

Nebraska—2008 8-Hour Ozone NAAQS (Primary and secondary)

Designated area	Designation		Classification	
	Date [1]	Type	Date [1]	Type
Burt County				
Butler County				
Cass County				
Cedar County				
Chase County				
Cherry County				
Cheyenne County				
Clay County				
Colfax County				
Cuming County				
Custer County				
Dakota County				
Dawes County				
Dawson County				
Deuel County				
Dixon County				
Dodge County				
Douglas County				
Dundy County				
Fillmore County				
Franklin County				
Frontier County				
Furnas County				
Gage County				
Garden County				
Garfield County				
Gosper County				
Grant County				
Greeley County				
Hall County				
Hamilton County				
Harlan County				
Hayes County				
Hitchcock County				
Holt County				
Hooker County				
Howard County				
Jefferson County				
Johnson County				
Kearney County				
Keith County				
Keya Paha County				
Kimball County				
Knox County				
Lancaster County				
Lincoln County				
Logan County				
Loup County				
McPherson County				
Madison County				
Merrick County				
Morrill County				
Nance County				
Nemaha County				
Nuckolls County				
Otoe County				
Pawnee County				
Perkins County				
Phelps County				
Pierce County				
Platte County				
Polk County				
Red Willow County				
Richardson County				
Rock County				
Saline County				
Sarpy County				
Saunders County				
Scotts Bluff County				
Seward County				
Sheridan County				

Nebraska—2008 8-Hour Ozone NAAQS (Primary and secondary)

Designated area	Designation		Classification	
	Date [1]	Type	Date [1]	Type
Sherman County				
Sioux County				
Stanton County				
Thayer County				
Thomas County				
Thurston County				
Valley County				
Washington County				
Wayne County				
Webster County				
Wheeler County				
York County				

[1] This date is July 20, 2012, unless otherwise noted.
[2] Includes any Indian country in each county or area, unless otherwise specified.

* * * * *

§ 81.329 Nevada.

Nevada—TSP

Designated area	Does not meet primary standards	Does not meet secondary standards	Cannot be classified	Better than national standards
(Township Range):				
Clark County:				
Las Vegas Valley (212)(15–24S, 56–64E)	X			
Colorado River Valley (213) (22–33S, 63–66E)			X [1]	
Rest of County [2]				X
Carson Desert (101)(15–24.5N, 25–35E)	X			
Winnemucca Segment (70)(34–38N, 34–41E)	X			
Lower Reese Valley (59)(27–32N, 42–48E)		X		
Fernley Area (76)(19–21N, 23–26E)	X			
Truckee Meadows (87)(17–20N, 18–21E)	X			
Mason Valley (108)(9–16N, 24–26E)	X			
Clovers Area (64)(32–39N, 42–46E)		X		

[1] EPA designation replaces State designation.
[2] Rest of County refers to 27 hydrographic areas either entirely or partially located within Clark County as shown on the State of Nevada Division of Water Resources' map titled Water Resources and Inter-basin Flows (September 1971), excluding the two designated areas in Clark County specifically listed in the table.

Nevada—SO_2

Designated area	Does not meet primary standards	Does not meet secondary standards	Cannot be classified	Better than national standards
(Township Range):				
Steptoe Valley (179) (10–29N, 61–67E):				
Central				X
Northern (area which is north of Township 21 North and within the drainage basin of the Steptoe Valley)			X	
Southern (area which is south of Township 15 North and within the drainage basin of the Steptoe Valley)			X	
Boulder Flat (61) (31–37N, 45–51E):				
Upper Unit 61				X
Lower Unit 61				X
Rest of State [1]				X

[1] Rest of State refers to hydrographic areas as shown on the State of Nevada Division of Water Resources' map titled Water Resources and Inter-basin Flows (September 1971), excluding the designated areas specifically listed in the table.

Nevada—Carbon Monoxide

Designated Area	Designation		Classification	
	Date [1]	Type	Date [1]	Type
Lake Tahoe Nevada Area				
Hydrographic Area 90 Carson City County (part) Douglas County (part) Washoe County (part)	2/13/04	Attainment		
Las Vegas Area:	9/27/2010	Attainment		
Clark County (part).				
Las Vegas Valley.				
Hydrographic Area 212.				
Reno Area: Washoe County (part) Truckee Meadows Hydrographic Area 87	8/4/08	Attainment		
Rest of State	.....	Unclassifiable/Attainment		
Carson City County (part)				
Area outside Hydrographic Area 90				
Churchill County				
Clark County (part)				
Area outside Las Vegas Valley Hydrographic Area 212				
Douglas County (part)				
Area outside Hydrographic Area 90				
Elko County				
Esmeralda County				
Eureka County				
Humboldt County				
Lander County				
Lincoln County				
Lyon County				
Mineral County				
Nye County				
Pershing County				
Storey County				
Washoe County (part)				
Remainder of county				
White Pine County				

[1] This date is November 15, 1990, unless otherwise noted.

Nevada—Ozone (1-Hour Standard)[3]

Designated area	Designation		Classification	
	Date [1]	Type	Date [1]	Type
Reno Area:				
Washoe County	([2])	Nonattainment	([2])	Marginal.
Rest of State		Unclassifiable/Attainment		
Carson City				
Churchill County				
Clark County				
Douglas County				
Elko County				
Esmeralda County				
Eureka County				
Humboldt County				
Lander County				
Lincoln County				
Lyon County				
Mineral County				
Nye County				
Pershing County				
Storey County				
White Pine County				

[1] This date is October 18, 2000, unless otherwise noted.
[2] This date is January 16, 2001.
[3] The 1-hour ozone standard is revoked effective June 15, 2005 for all areas in Nevada except the portion of Clark County designated nonattainment for the 8-hour ozone standard effective September 13, 2004 for which the 1-hour ozone standard is revoked effective September 13, 2005.

Nevada—PM–10

Designated area	Designation		Classification	
	Date	Type	Date	Type
Washoe County:				
Reno planning area	11/15/90	Nonattainment	02/07/01	Serious.
Hydrographic area 87				
Clark County:				
Las Vegas planning area	11/15/90	Nonattainment	02/08/93	Serious.
Hydrographic area 212				
Boulder Flat (61) (31–37N, 45–51E):				
Upper Unit 61	11/15/90	Unclassifiable		
Lower Unit 61	11/15/90	Unclassifiable		
Rest of State [1]	11/15/90	Unclassifiable		

[1] Rest of State refers to hydrographic areas as shown on the State of Nevada Division of Water Resources' map titled Water Resources and Inter-basin Flows (September 1971), as revised to include a division of Carson Desert (area 101) into two areas, a smaller area 101 and area 101A, and excluding the designated areas specifically listed in the table.

Nevada—NO_2 (1971 Annual Standard)

Designated area	Does not meet primary standards	Cannot be classified or better than national standards
Boulder Flat (61)(31–37N, 45–51E):		
Upper Unit 61	.....	X
Lower Unit 61	.....	X
Rest of State [1]	.....	X

[1] Rest of State refers to hydrographic areas as shown on the State of Nevada Division of Water Resources' map titled Water Resources and Inter-basin Flows (September 1971), excluding the designated areas specifically listed in the table.

Nevada—NO_2 (2010 1-Hour Standard)

Designated area	Designation [a]	
	Date [1]	Type
State of Nevada [2]	.....	Unclassifiable/Attainment.

[a] Includes Indian Country located in each county or area, except as otherwise specified.
[1] This date is 90 days after October 31, 2011, unless otherwise noted.
[2] Statewide refers to hydrographic areas as shown on the State of Nevada Division of Water Resources' map titled "Water Resources and Inter-basin Flows" (September 1971), as revised to include a division of Carson Desert (area 101) into two areas, a smaller area 101 and area 101A, and a division of Boulder Flat (area 61) into an Upper Unit 61 and a Lower Unit 61. See also 67 FR 12474 (March 19, 2002).

Nevada—Ozone (8-Hour Standard)

Designated area	Designation [a]		Category/classification	
	Date [1]	Type	Date [1]	Type
Las Vegas, NV:				
Clark County	[2]	Nonattainment	6/13/12	Subpart 2/Marginal.
That portion of Clark County that lies in hydrographic areas 164A, 164B, 165, 166, 167, 212, 213, 214, 216, 217, and 218 but excluding the Moapa River Indian Reservation and the Fort Mojave Indian Reservation.[b]				
Rest of State	.....	Unclassifiable/Attainment		
Carson City				
Churchill County				
Clark County				
(part) remainder				
Douglas County				
Elko County				
Esmeralda County				
Eureka County				
Humboldt County				
Lander County				
Lincoln County				
Lyon County				
Mineral County				
Nye County				
Pershing County				

Nevada—Ozone (8-Hour Standard)

Designated area	Designation [a]		Category/classification	
	Date [1]	Type	Date [1]	Type
Storey County Washoe County (Reno Area) White Pine County				

[a] Includes Indian Country located in each county or area, except as otherwise specified.
[b] The use of reservation boundaries for this designation is for purposes of CAA planning only and is not intended to be a federal determination of the exact boundaries of the reservations. Nor does the specific listing of the Tribes in this table confer, deny or withdraw Federal recognition of any of the Tribes listed or not listed.
[1] This date is June 15, 2004, unless otherwise noted.
[2] The effective date is September 13, 2004.

Nevada—$PM_{2.5}$ (Annual NAAQS)

Designated area	Designation [a]	
	Date [1]	Type
Statewide [2]	.....	Unclassifiable/Attainment.

[a] Includes Indian Country located in each county or area, except as otherwise specified.
[1] This date is 90 days after January 5, 2005, unless otherwise noted.
[2] Statewide refers to hydrographic areas as shown on the State of Nevada Division of Water Resources' map titled "Water Resources and Inter-basin Flows" (September 1971), as revised to include a division of Carson Desert (area 101) into two areas, a smaller area 101 and area 101A, and a division of Boulder Flat (area 61) into an Upper Unit 61 and a Lower Unit 61. See also 67 FR 12474 (March 19, 2002).

Nevada—$PM_{2.5}$ [24-hour NAAQS]

Designated area	Designation for the 1997 NAAQS [a]		Designation for the 2006 NAAQS [a]	
	Date [1]	Type	Date [2]	Type
Statewide [3]	.....	Unclassifiable/Attainment.	.....	Unclassifiable/Attainment.

[a] Includes Indian Country located in each county or area, except as otherwise specified.
[1] This date is 90 days after January 5, 2005, unless otherwise noted.
[2] This date is 30 days after November 13, 2009, unless otherwise noted.
[3] Statewide refers to hydrographic areas as shown on the State of Nevada Division of Water Resources' map titled "Water Resources and Inter-basin Flows" (September 1971), as revised to include a division of Carson Desert (area 101) into two areas, a smaller area 101 and area 101A, and a division of Boulder Flat (area 61) into an Upper Unit 61 and a Lower Unit 61. See also 67 FR 12474 (March 19, 2002).

Nevada—2008 Lead NAAQS

Designated area	Designation for the 2008 NAAQS [a]	
	Date [1]	Type
Whole State	.....	Unclassifiable/Attainment.

[a] Includes Indian Country located in each county or area, except as otherwise specified.
[1] December 31, 2011 unless otherwise noted.

[43 FR 8964, Mar. 3, 1978]

EDITORIAL NOTE: For FEDERAL REGISTER citations affecting §81.329 see the List of CFR Sections Affected, which appears in the Finding Aids section of the printed volume and at *www.fdsys.gov*.

EFFECTIVE DATE NOTE: At 77 FR 30134, May 21, 2012, §81.329 was amended by revising the table heading for ''Nevada—Ozone (8-Hour Standard)'' to read ''Nevada—1997 8-Hour Ozone NAAQS (Primary and Secondary)''; by adding a new table entitled ''Nevada—2008 8-Hour Ozone NAAQS (Primary and Secondary)'' following the newly designated table ''Nevada—1997 8-Hour Ozone NAAQS (Primary and Secondary)'', effective July 20, 2012. For the convenience of the user, the added text is set forth as follows:

§81.329 Nevada.

* * * * *

Nevada—2008 8-Hour Ozone NAAQS (Primary and secondary)

Designated area	Designation		Classification	
	Date [1]	Type	Date [1]	Type
Statewide and Any Areas of Indian Country: [2]	.....	Unclassifiable/Attainment		

[1] This date is July 20, 2012, unless otherwise noted.
[2] Statewide refers to hydrographic areas as shown on the State of Nevada Division of Water Resources' map titled "Water Resources and Inter-basin Flows" (September 1971), as revised to include a division of Carson Desert (area 101) into two areas, a smaller area 101 and area 101A, and a division of Boulder Flat (area 61) into an Upper Unit 61 and a Lower Unit 61. See also 67 FR 12474 (March 19, 2002).

* * * * *

§ 81.330 New Hampshire.

New Hampshire—TSP

Designated area	Does not meet primary standards	Does not meet secondary standards	Cannot be classified	Better than national standard
Metro Keene				X
Metro Manchester			X	
Remainder of New Hampshire's Portion of So. N.H.M.V. AQCR 121				X
Central NH Interstate AQCR 149				X
Metro Berlin			X	
Remainder of New Hampshire's portion of Androscoggin Valley Interstate ACQR 107				X

New Hampshire—SO_2

Designated area	Does not meet primary standards	Does not meet secondary standards	Cannot be classified	Better than national standards
N.H. portion of Merrimack Valley So. N.H. Interstate AQCR 121				X
Central N.H. Intrastate AQCR 149				X
N.H. portion of Androscoggin Valley Interstate AQCR 107				X

New Hampshire—Carbon Monoxide

Designated area:	Designation		Classification	
	Date	Type	Date	Type
Manchester Area:				
Hillsborough County (part), City of Manchester.	1–29–01	Attainment		
Nashua Area:				
Hillsborough County (part), City of Nashua	1–29–01	Attainment		
AQCR 107 Androscoggin Valley Interstate	.....	Unclassifiable/Attainment		
Coos County				
AQCR 121 Merrimack Valley-S NH Interstate	.....	Unclassifiable/Attainment		
Belknap County				
Cheshire County				
Hillsborough County (part), Area outside of Nashua and Manchester				
Merrimack County				
Rockingham County				
Stratford County				
Sullivan County				
AQCR 149 Central New Hampshire Intrastate	.....	Unclassifiable/Attainment		
Carroll County				
Grafton County				

New Hampshire—Ozone (1-Hour Standard)[3]

Designated area	Designation		Classification	
	Date [1]	Type	Date [1]	Type
Belknap County Area:				
Belknap County		Unclassifiable/Attainment		

New Hampshire—Ozone (1-Hour Standard)[3]

Designated area	Designation		Classification	
	Date [1]	Type	Date [1]	Type
Boston-Lawrence-Worcester Area:				
Hillsborough County (part)	(1)	Nonattainment	(2)	Serious.
Pelham Town, Amherst Town, Brookline Town, Hollis Town, Hudson Town, Litchfield Town, Merrimack Town, Milford Town, Mont Vernon Town, Nashua City Wilton Town.				
Rockingham County (part)				
Atkinson Town, Brentwood Town, Danville Town, Derry Town, E. Kingston Town, Hampstead Town, Hampton Falls Town, Kensington Town, Kingston Town, Londonderry Town, Newton Town, Plaistow Town, Salem Town, Sandown Town, Seabrook Town, South Hampton Town Windham Town.	(2)	Nonattainment	(2)	Serious.
Cheshire County Area:				
Cheshire County	(2)	Nonattainment	(2)	Incomplete Data.
Manchester Area:				
Hillsborough County (part)	(2)	Nonattainment	(2)	Marginal.
Antrim Town, Bedford Town, Bennington Town, Deering Town, Francestown Town, Goffstown Town, Greenfield Town, Greenville Town, Hancock Town, Hillsborough Town, Lyndeborough Town, Manchester city, Mason Town, New Boston Town, New Ipswich Town, Petersborough Town, Sharon Town, Temple town, Weare Town, Windsor Town.				
Merrimack County	(2)	Nonattainment	(2)	Marginal.
Rockingham County (part)	(2)	Nonattainment	(2)	Marginal.
Auburn Town, Candia Town, Chester Town, Deerfield Town, Epping Town, Fremont Town, Northwood Town, Nottingham Town, Raymond Town.				
Portsmouth-Dover-Rochester Area:				
Rockingham County (part)	(2)	Nonattainment	(2)	Serious.
Exeter Town, Greenland Town, Hampton Town, New Castle Town, Newfields Town, Newington Town, Newmarket Town, North Hampton Town, Portsmouth city, Rye Town, Stratham Town.				
Strafford County	(2)	Nonattainment	(2)	Serious.
Sullivan County Area:				
Sullivan County		Unclassifiable/Attainment		
AQCR 107 Androscoggin Valley Interstate:				
Coos County		Unclassifiable/Attainment		
AQCR 149 Central New Hampshire Interstate:				
Carroll County		Unclassifiable/Attainment		
Grafton County		Unclassifiable/Attainment		

[1] This date is October 18, 2000 unless otherwise noted.
[2] This date is January 16, 2001.
[3] The 1-hour ozone standard is revoked effective June 15, 2005 for all areas in New Hampshire.

New Hampshire—NO_2 (1971 Annual Standard)

Designated area	Does not meet primary standards	Cannot be classified or better than national standards
Statewide		X

New Hampshire—NO_2 (2010 1-Hour Standard)

Designated area	Designation [a]	
	Date [1]	Type
State of New Hampshire		Unclassifiable/Attainment.

[a] Includes Indian Country located in each county or area, except as otherwise specified.
[1] This date is 90 days after October 31, 2011, unless otherwise noted.

New Hampshire—Ozone (8-Hour Standard)

Designated area	Designated [a]		Category/classification	
	Date [1]	Type	Date [1]	Type
Boston-Manchester-Portsmouth (SE), NH:				
Hillsborough County (part)		Nonattainment		Subpart 2/Moderate.
Amherst Town, Bedford Town, Brookline Town, Goffstown Town, Hollis Town, Hudson Town, Litchfield Town, Manchester City, Merrimack Town, Milford Town, Nashua City, Pelham Town				
Merrimack County (part)		Nonattainment		Subpart 2/Moderate.
Hooksett Town				
Rockingham County (part)		Nonattainment		Subpart 2/Moderate.
Atkinson Town, Auburn Town, Brentwood Town, Candia Town, Chester Town, Danville Town, Derry Town, E. Kingston Town, Epping Town, Exeter Town, Fremont Town, Greenland Town, Hampstead Town, Hampton Town, Hampton Falls Town, Kensington Town, Kingston Town, Londonderry Town, New Castle Town, Newfields Town, Newington Town, Newmarket Town, Newton Town, North Hampton Town, Plaistow Town, Portsmouth City, Raymond Town, Rye Town, Salem Town, Sandown Town, Seabrook Town, South Hampton Town, Stratham Town, Windham Town				
Strafford County (part)		Nonattainment		Subpart 2/Moderate.
Dover City, Durham Town, Rochester City, Rollinsford Town, and Somersworth City				
Rest of State:		Unclassifiable/Attainment		
Belknap County				
Carroll County				
Cheshire County				
Coos County				
Grafton County				
Hillsborough County (part) remainder				
Merrimack County (part) remainder				
Rockingham County (part) remainder				
Strafford County (part) remainder				
Sullivan County				

[a] Includes Indian Country located in each county or area, except as otherwise specified.
[1] This date is June 15, 2004, unless otherwise noted.

New Hampshire—$PM_{2.5}$ (Annual NAAQS)

Designated area	Designation [a]	
	Date [1]	Type
Statewide:		
Belknap County		Unclassifiable/Attainment.
Carroll County		Unclassifiable/Attainment.
Cheshire County		Unclassifiable/Attainment.
Coos County		Unclassifiable/Attainment.
Grafton County		Unclassifiable/Attainment.
Hillsborough County		Unclassifiable/Attainment.
Merrimack County		Unclassifiable/Attainment.
Rockingham County		Unclassifiable/Attainment.
Strafford County		Unclassifiable/Attainment.
Sullivan County		Unclassifiable/Attainment.

[a] Includes Indian Country located in each county or area, except as otherwise specified.
[1] This date is 90 days after January 5, 2005, unless otherwise noted.

New Hampshire—$PM_{2.5}$ [24-hour NAAQS]

Designated area	Designation for the 1997 NAAQS [a]		Designation for the 2006 NAAQS [a]	
	Date [1]	Type	Date [2]	Type
Statewide:				
Belknap County		Unclassifiable/Attainment.		Unclassifiable/Attainment.
Carroll County		Unclassifiable/Attainment.		Unclassifiable/Attainment.
Cheshire County		Unclassifiable/Attainment.		Unclassifiable/Attainment.
Coos County		Unclassifiable/Attainment.		Unclassifiable/Attainment.
Grafton County		Unclassifiable/Attainment.		Unclassifiable/Attainment.
Hillsborough County		Unclassifiable/Attainment.		Unclassifiable/Attainment.
Merrimack County		Unclassifiable/Attainment.		Unclassifiable/Attainment.
Rockingham County		Unclassifiable/Attainment.		Unclassifiable/Attainment.
Strafford County		Unclassifiable/Attainment.		Unclassifiable/Attainment.
Sullivan County		Unclassifiable/Attainment.		Unclassifiable/Attainment.

[a] Includes Indian Country located in each county or area, except as otherwise specified.
[1] This date is 90 days after January 5, 2005, unless otherwise noted.
[2] This date is 30 days after November 13, 2009, unless otherwise noted.

New Hampshire—2008 Lead NAAQS

Designated area	Designation for the 2008 NAAQS [a]	
	Date [1]	Type
Whole State		Unclassifiable/Attainment.

[a] Includes Indian Country located in each county or area, except as otherwise specified.
[1] December 31, 2011 unless otherwise noted.

[43 FR 8964, Mar. 3, 1978]

EDITORIAL NOTE: For FEDERAL REGISTER citations affecting §81.330 see the List of CFR Sections Affected, which appears in the Finding Aids section of the printed volume and at *www.fdsys.gov*.

EFFECTIVE DATE NOTE: At 77 FR 30134, May 21, 2012, §81.330 was amended by revising the table heading for ''New Hampshire—Ozone (8-Hour Standard)'' to read ''New Hampshire—1997 8-Hour Ozone NAAQS (Primary and Secondary); by adding a new table entitled ''New Hampshire—2008 8-Hour Ozone NAAQS (Primary and Secondary)'' following the newly designated table ''New Hampshire—1997 8-Hour Ozone NAAQS (Primary and Secondary)'', effective July 20, 2012. For the convenience of the user, the added text is set forth as follows:

§ 81.330 New Hampshire.

* * * * *

New Hampshire—2008 8-Hour Ozone NAAQS (Primary and secondary)

Designated area	Designation		Classification	
	Date [1]	Type	Date [1]	Type
Statewide: [2]	.....	Unclassifiable/Attainment		
Belknap County				
Carroll County				
Cheshire County				
Coos County				
Grafton County				
Hillsborough County				
Merrimack County				
Rockingham County				
Strafford County				
Sullivan County				

[1] This date is July 20, 2012, unless otherwise noted.
[2] Includes any Indian country in each county or area, unless otherwise specified.

* * * * *

§ 81.331 New Jersey.

New Jersey—SO_2

Designated area	Does not meet primary standards	Does not meet secondary standards	Cannot be classified	Better than national standards
New Jersey-New York-Connecticut Interstate AQCR	.....	.....	.....	X
Metropolitan Philadelphia Interstate AQCR	.....	.....	.....	X
New Jersey Intrastate AQCR	.....	.....	.....	X
Northeast Pennsylvania-Upper Delaware Valley Interstate AQCR:				
The Township of Harmony	X	X		
The Township of White	X	X		
The Township of Oxford	X	X		
The Township of Belvidere	X	X		
Portions of Liberty Township	X	X		
Portions of Mansfield Township	X	X		
Remainder of AQCR	X	X	.....	X

New Jersey—Carbon Monoxide

Designated Area	Designation		Classification	
	Date [1]	Type	Date [1]	Type
Atlantic City Area				
Atlantic County (part)				
The City of Atlantic City	2/5/96	Attainment		
Burlington Area				
Burlington County (part)				
City of Burlington	2/5/96	Attainment		
Freehold Area				
Monmouth County (part)				
Borough of Freehold	2/5/96	Attainment		
Morristown Area				
Morris County (part)				
City of Morristown	2/5/96	Attainment		
New York-N. New Jersey-Long Island Area				
Bergen	10/22/02	Attainment.		
Essex County	do	Attainment.		
Hudson County	do	Attainment.		
Passaic County (part)				
City of Clifton	do	Attainment.		
City of Paterson	do	Attainment.		
City of Passaic	do	Attainment.		
Union County	do	Attainment.		
Penns Grove Area				

New Jersey—Carbon Monoxide

Designated Area	Designation		Classification	
	Date [1]	Type	Date [1]	Type
Salem County (part)				
Borough of Penns Grove. Those portions within 100 yards of the intersections of U.S. Route 130 and County Roads 675 & 607.	2/5/96	Attainment		
Perth Amboy Area				
Middlesex County (part)				
City of Perth Amboy	2/5/96	Attainment		
Philadelphia-Camden County Area				
Camden County	2/5/96	Attainment		
Somerville Area				
Somerset County (part)				
Borough of Somerville	2/5/96	Attainment		
Toms River Area				
Ocean County (part)				
City of Toms River	2/5/96	Attainment		
Trenton Area				
Mercer County (part)				
City of Trenton	2/5/96	Attainment		
AQCR 043 NJ NY Connecticut Interstate (Remainder of).	.....	Unclassifiable/Attainment		
Middlesex County (part)				
Area outside of Perth Amboy				
Monmouth County (part)				
Area outside Freehold				
Morris County (part)				
Area outside of Morristown				
Passaic County (part)				
Area outside Clifton, Patterson, and Passaic				
Somerset County (part)				
Area outside of Somerville				
AQCR 045 Metro. Philadelphia Interstate (Remainder of).	.....	Unclassifiable/Attainment		
Burlington County (part)				
Area outside Burlington				
Gloucester County				
Mercer County (part)				
Area outside Trenton				
Salem County (part)				
Area outside Penns Grove Area				
AQCR 150 New Jersey Intrastate	.....	Unclassifiable/Attainment		
Atlantic County (part)				
Area outside Atlantic City				
Cape May County				
Cumberland County				
Ocean County (part)				
Area outside Toms River				
AQCR 151 NE PA—Upper Delaware Valley	.....	Unclassifiable/Attainment		
Hunterdon County				
Sussex County				
Warren County				

[1] This date is November 15, 1990, unless otherwise noted.

New Jersey—Ozone (1-Hour Standard)[3]

Designated area	Designation		Classification	
	Date [1]	Type	Date [1]	Type
Allentown-Bethlehem Easton Area:				
Warren County	(2)	Nonattainment	(2)	Marginal.
Atlantic City Area:				
Atlantic County	(2)	Nonattainment	(2)	Moderate.
Cape May County	(2)	Nonattainment	(2)	Moderate.
New York-N. New Jersey-Long Island Area:				
Bergen County	.....	Nonattainment	.....	Severe-17.
Essex County		Nonattainment		Severe-17.
Hudson County		Nonattainment		Severe-17.
Hunterdon County		Nonattainment		Severe-17.
Middlesex County		Nonattainment		Severe-17.

New Jersey—Ozone (1-Hour Standard)[3]

Designated area	Designation		Classification	
	Date [1]	Type	Date [1]	Type
Monmouth County		Nonattainment		Severe-17.
Morris County		Nonattainment		Severe-17.
Ocean County		Nonattainment		Severe-17.
Passaic County		Nonattainment		Severe-17.
Somerset County		Nonattainment		Severe-17.
Sussex County		Nonattainment		Severe-17.
Union County		Nonattainment		Severe-17.
Philadelphia-Wilmington-Trenton Area:				
Burlington County		Nonattainment		Severe-15.
Camden County		Nonattainment		Severe-15.
Cumberland County		Nonattainment		Severe-15.
Gloucester County		Nonattainment		Severe-15.
Mercer County		Nonattainment		Severe-15.
Salem County		Nonattainment		Severe-15.

[1] This date is November 15, 1990, unless otherwise noted.
[2] This date is January 16, 2001.
[3] The 1-hour ozone standard is revoked effective June 15, 2005 for all areas in New Jersey.

New Jersey—NO_2 (1971 Annual Standard)

Designated area	Does not meet primary standards	Cannot be classified or better than national standards
New Jersey-New York-Connecticut Interstate AQCR		X
Metropolitan Philadelphia Interstate AQCR		X
New Jersey Intrastate AQCR		X
Northeast Pennsylvania-Upper Delaware Interstate AQCR		X

New Jersey—NO_2 (2010 1-Hour Standard)

Designated area	Designation [a]	
	Date [1]	Type
State of New Jersey		Unclassifiable/Attainment.

[a] Includes Indian Country located in each county or area, except as otherwise specified.
[1] This date is 90 days after October 31, 2011, unless otherwise noted.

New Jersey—Ozone (8-Hour Standard)

Designated area	Designation [a]		Category/classification	
	Date [1]	Type	Date [1]	Type
New York-N. New Jersey-Long Island, NY-NJ-CT:				
Bergen County		Nonattainment		Subpart 2/Moderate.
Essex County		Nonattainment		Subpart 2/Moderate.
Hudson County		Nonattainment		Subpart 2/Moderate.
Hunterdon County		Nonattainment		Subpart 2/Moderate.
Middlesex County		Nonattainment		Subpart 2/Moderate.
Monmouth County		Nonattainment		Subpart 2/Moderate.
Morris County		Nonattainment		Subpart 2/Moderate.
Passaic County		Nonattainment		Subpart 2/Moderate.
Somerset County		Nonattainment		Subpart 2/Moderate.
Sussex County		Nonattainment		Subpart 2/Moderate.
Union County		Nonattainment		Subpart 2/Moderate.
Warren County		Nonattainment		Subpart 2/Moderate.
Philadelphia-Wilmington-Atlantic City, PA-NJ-MD-DE:				
Atlantic County		Nonattainment		Subpart 2/Moderate.[2]
Burlington County		Nonattainment		Subpart 2/Moderate.[2]
Camden County		Nonattainment		Subpart 2/Moderate.[2]
Cape May County		Nonattainment		Subpart 2/Moderate.[2]
Cumberland County		Nonattainment		Subpart 2/Moderate.[2]
Gloucester County		Nonattainment		Subpart 2/Moderate.[2]
Mercer County		Nonattainment		Subpart 2/Moderate.[2]
Ocean County		Nonattainment		Subpart 2/Moderate.[2]
Salem County		Nonattainment		Subpart 2/Moderate.[2]

[a] Includes Indian Country located in each county or area, except as otherwise specified.
[a] Includes Indian Country located in each county or area, except as otherwise specified.

[1] This date is June 15, 2004, unless otherwise noted.

New Jersey—$PM_{2.5}$ (Annual NAAQS)

Designated area	Designation [a]	
	Date [1]	Type
New York-N. New Jersey-Long Island, NY-NJ-CT:		
Bergen County		Nonattainment.
Essex County		Nonattainment.
Hudson County		Nonattainment.
Mercer County		Nonattainment.
Middlesex County		Nonattainment.
Monmouth County		Nonattainment.
Morris County		Nonattainment.
Passaic County		Nonattainment.
Somerset County		Nonattainment.
Union County		Nonattainment.
Philadelphia-Wilmington, PA-NJ-DE:		
Burlington County		Nonattainment.
Camden County		Nonattainment.
Gloucester County		Nonattainment.
New York-N. New Jersey-Long Island, NY-NJ-CT:		
Hunterdon County		Unclassifiable/Attainment.
Sussex County		Unclassifiable/Attainment.
Warren County		Unclassifiable/Attainment.
Atlantic City, NJ:		
Atlantic County		Unclassifiable/Attainment.
Cape May County		Unclassifiable/Attainment.
Cumberland County		Unclassifiable/Attainment.
Ocean County		Unclassifiable/Attainment.
Salem County		Unclassifiable/Attainment.

[a] Includes Indian Country located in each county or area, except as otherwise specified.
[1] This date is 90 days after January 5, 2005, unless otherwise noted.

New Jersey—$PM_{2.5}$ [24-hour NAAQS]

Designated area	Designation for the 1997 NAAQS [a]		Designation for the 2006 NAAQS [a]	
	Date [1]	Type	Date [2]	Type
New York-N.New Jersey-Long Island, NY-NJ-CT:				
Bergen County		Unclassifiable/Attainment.		Nonattainment.
Essex County		Unclassifiable/Attainment.		Nonattainment.
Hudson County		Unclassifiable/Attainment.		Nonattainment.
Mercer County		Unclassifiable/Attainment.		Nonattainment.
Middlesex County		Unclassifiable/Attainment.		Nonattainment.
Monmouth County		Unclassifiable/Attainment.		Nonattainment.
Morris County		Unclassifiable/Attainment.		Nonattainment.
Passaic County		Unclassifiable/Attainment.		Nonattainment.
Somerset County		Unclassifiable/Attainment.		Nonattainment.
Union County		Unclassifiable/Attainment.		Nonattainment.
Philadelphia-Wilmington, PA-NJ-DE:				
Burlington County		Unclassifiable/Attainment.		Nonattainment.
Camden County		Unclassifiable/Attainment.		Nonattainment.
Gloucester County		Unclassifiable/Attainment.		Nonattainment.
Rest of State:				
New York-N. New Jersey-Long Island, NY-NJ-CT:				
Hunterdon County		Unclassifiable/Attainment.		Unclassifiable/Attainment.
Sussex County		Unclassifiable/Attainment.		Unclassifiable/Attainment.

New Jersey—$PM_{2.5}$ [24-hour NAAQS]

Designated area	Designation for the 1997 NAAQS [a]		Designation for the 2006 NAAQS [a]	
	Date [1]	Type	Date [2]	Type
Warren County		Unclassifiable/Attainment.		Unclassifiable/Attainment.
Atlantic City, NJ:				
Atlantic County		Unclassifiable/Attainment.		Unclassifiable/Attainment.
Cape May County		Unclassifiable/Attainment.		Unclassifiable/Attainment.
Cumberland County		Unclassifiable/Attainment.		Unclassifiable/Attainment.
Ocean County		Unclassifiable/Attainment.		Unclassifiable/Attainment.
Salem County		Unclassifiable/Attainment.		Unclassifiable/Attainment.

[a] Includes Indian Country located in each county or area, except as otherwise specified.
[1] This date is 90 days after January 5, 2005, unless otherwise noted.
[2] This date is 30 days after November 13, 2009, unless otherwise noted.

New Jersey—2008 Lead NAAQS

Designated area	Designation for the 2008 NAAQS [a]	
	Date [1]	Type
Whole State		Unclassifiable/Attainment.

[a] Includes Indian Country located in each county or area, except as otherwise specified.
[1] December 31, 2011 unless otherwise noted.

[44 FR 5123, Jan. 25, 1979, as amended at 48 FR 37405, Aug. 18, 1983; 48 FR 43328, Sept. 23, 1983; 52 FR 18692, May 19, 1987; 52 FR 49411, Dec. 31, 1987; 53 FR 27347, July 20, 1988; 56 FR 56800, Nov. 6, 1991; 60 FR 62747, Dec. 7, 1995; 61 FR 2941, Jan. 30, 1996; 62 FR 35972, July 3, 1997; 63 FR 31066, June 5, 1998; 65 FR 45245, July 20, 2000; 67 FR 54580, Aug. 23, 2002; 69 FR 23921, Apr. 30, 2004; 70 FR 989, Jan. 5, 2005; 70 FR 44476, Aug. 3, 2005; 74 FR 58748, Nov. 13, 2009; 76 FR 3839, Jan. 21, 2011; 76 FR 72113, Nov. 22, 2011; 77 FR 9569, Feb. 17, 2012]

EFFECTIVE DATE NOTE: At 77 FR 30135, May 21, 2012, § 81.331 was amended by revising the table heading for ''New Jersey—Ozone (8-Hour Standard)'' to read ''New Jersey—1997 8-Hour Ozone NAAQS (Primary and Secondary)''; by adding a new table entitled ''New Jersey—2008 8-Hour Ozone NAAQS (Primary and Secondary)'' following the newly designated table ''New Jersey—1997 8-Hour Ozone NAAQS (Primary and Secondary)'', effective July 20, 2012. For the convenience of the user, the added text is set forth as follows:

§ 81.331 New Jersey.

* * * * *

New Jersey—2008 8-Hour Ozone NAAQS (Primary and secondary)

Designated area	Designation		Classification	
	Date [1]	Type	Date [1]	Type
New York-N. New Jersey-Long Island, NY-NJ-CT: [2]		Nonattainment		Marginal.
Bergen County				
Essex County				
Hudson County				
Hunterdon County				
Middlesex County				
Monmouth County				
Morris County				
Passaic County				
Somerset County				
Sussex County				
Union County				
Warren County				
Philadelphia–Wilmington–Atlantic City, PA-NJ-MD-DE: [2].		Nonattainment		Marginal.
Atlantic County				
Burlington County				
Camden County				
Cape May County				

New Jersey—2008 8-Hour Ozone NAAQS (Primary and secondary)

Designated area	Designation		Classification	
	Date [1]	Type	Date [1]	Type
Cumberland County Gloucester County Mercer County Ocean County Salem County				

[1] This date is July 20, 2012, unless otherwise noted.
[2] Excludes Indian country located in each area, unless otherwise noted.

* * * * *

§ 81.332 New Mexico.

New Mexico—TSP

Designated area	Does not meet primary standards	Does not meet secondary standards	Cannot be classified	Better than national standards
AQCR 152:				
Bernalillo County:				
Portions of City of Albuquerque	X			
Remainder of County				X

New Mexico—SO_2

Designated area	Does not meet primary standards	Does not meet secondary standards	Cannot be classified	Better than national standards
AQCR 012:				
Grant County				X
Remainder of AQCR				X
AQCR 014				X
AQCR 152				X
AQCR 153				X
AQCR 154				X
AQCR 155				X
AQCR 156				X
AQCR 157				X

New Mexico—Carbon Monoxide

Designated Area	Designation		Classification	
	Date [1]	Type	Date [1]	Type
Albuquerque Area Bernalillo County	7/15/96	Attainment		
AQCR 012 New Mexico-Southern Border Intrastate		Unclassifiable/Attainment		
Grant County				
Hidalgo County				
Luna County				
AQCR 014 Four Corners Interstate				
San Juan County (part)				
Central Farmington		Unclassifiable/Attainment		
AQCR 014 Four Corners Interstate (Remainder of)		Unclassifiable/Attainment		
McKinley County (part), as described under 40 CFR 81.121.				
Rio Arriba County (part), as described under 40 CFR 81.121.				
San Juan County (part)				
Remainder of county				
Sandoval County, as described under 40 CFR 81.121.				
Valencia County, as described under 40 CFR 81.121.				
AQCR 152 Albuquerque-Mid Rio Grande Intrastate		Unclassifiable/Attainment		
Sandoval County (part), as described under 40 CFR 81.83.				
Valencia County (part), as described under 40 CFR 81.83.				

New Mexico—Carbon Monoxide

Designated Area	Designation		Classification	
	Date [1]	Type	Date [1]	Type
AQCR 153 El Paso-Las Cruces-Alamogordo	.....	Unclassifiable/Attainment		
Dona Ana County				
Lincoln County				
Otero County				
Sierra County				
AQCR 154 Northeastern Plains Intrastate	.....	Unclassifiable/Attainment		
Colfax County				
Guadalupe County				
Harding County				
Mora County				
San Miguel County				
Torrance County				
Union County				
AQCR 155 Pecos-Permian Basin Intrastate	.....	Unclassifiable/Attainment		
Chaves County				
Curry County				
De Baca County				
Eddy County				
Lea County				
Quay County				
Roosevelt County				
AQCR 156 S.W. Mountains-Augustine Plains	.....	Unclassifiable/Attainment		
Catron County				
Cibola County				
McKinley County (part), as described under 40 CFR 81.241.				
Socorro County				
Valencia County (part), as described under 40 CFR 81.241.				
AQCR 157 Upper Rio Grande Valley Intrastate (Remainder of).	.....	Unclassifiable/Attainment		
Los Alamos County				
Rio Arriba (part)				
see 40 CFR 81.239				
Santa Fe County (part)				
Remainder of county				
Taos County				
AQCR 157 Upper Rio Grande Valley Intrastate				
Santa Fe County (part)				
Narrow corridor in Santa Fe	.....	Unclassifiable/Attainment		

[1] This date is November 15, 1990, unless otherwise noted.

New Mexico—Ozone (1-Hour Standard)[2]

Designated area	Designation		Classification	
	Date [1]	Type	Date [1]	Type
AQCR 012 New Mexico-Southern Border Intrastate		Unclassifiable/Attainment		
Grant County				
Hidalgo County				
Luna County				
AQCR 014 Four Corners Interstate		Unclassifiable/Attainment		
see 40 CFR 81.121				
McKinley County (part)				
Rio Arriba County (part)				
San Juan County				
Sandoval County (part)				
Valencia County (part)				
AQCR 152 Albuquerque-Mid Rio Grande Intrastate		Unclassifiable/Attainment		
Bernalillo County (part)				
AQCR 152 Albuquerque-Mid Rio Grande		Unclassifiable/Attainment		
Sandoval County (part) see 40 CFR 81.83				
Valencia County see 40 CFR 81.83.				
AQCR 153 El Paso-Las Cruces-Alamogordo	7/12/95	Nonattainment	7/12/95	Marginal.
Dona Ana County (part)—(Sunland Park Area) The Area bounded by the New Mexico-Texas State line on the east, the New Mexico-Mexico international line on the south, the Range 3E-Range 2E line on the west, and the N3200 latitude line on the north.				

New Mexico—Ozone (1-Hour Standard)[2]

Designated area	Designation		Classification	
	Date [1]	Type	Date [1]	Type
Remainder of Dona Ana County		Unclassifiable/Attainment		
Lincoln County		Unclassifiable/Attainment		
Otero County		Unclassifiable/Attainment		
Sierra County		Unclassifiable/Attainment		
AQCR 154 Northeastern Plains Intrastate		Unclassifiable/Attainment		
Colfax County				
Guadalupe County				
Harding County				
Mora County				
San Miguel County				
Torrance County				
Union County				
AQCR 155 Pecos-Permian Basin Intrastate		Unclassifiable/Attainment		
Chaves County				
Curry County				
De Baca County				
Eddy County				
Lea County				
Quay County				
Roosevelt County				
AQCR 156 SW Mountains-Augustine Plains		Unclassifiable/Attainment		
Catron County				
Cibola County				
McKinley County (part) see 40 CFR 81.241				
Socorro County				
Valencia County (part) see 40 CFR 81.241				
AQCR 157 Upper Rio Grande Valley Intrastate		Unclassifiable/Attainment		
Los Alamos County				
Rio Arriba County (part) see 40 CFR 81.239				
Santa Fe County				
Taos County				

[1] This date is October 18, 2000, unless otherwise noted.
[2] The 1-hour ozone standard is revoked effective June 15, 2005 for all areas in New Mexico.

New Mexico—PM–10

Designated Area	Designation		Classification	
	Date	Type	Date	Type
Dona Ana County				
The area bounded by Anthony Quadrangle, Anthony, New Mexico - Texas.	11/15/90	Nonattainment	11/15/90	Moderate
SE/4 La Mesa 15′ Quadrangle, N3200 - W10630/7.5, Township 26S, Range 3E, Sections 35 and 36 as limited by the New Mexico - Texas State line on the south				
Rest of State	11/15/90	Unclassifiable		

New Mexico—NO_2 (1971 Annual Standard)

Designated area	Does not meet primary standards	Cannot be classified or better than national standards
AQCR 012		X
AQCR 014		X
AQCR 152		X
AQCR 153		X
AQCR 154		X
AQCR 155		X
AQCR 156		X
AQCR 157		X

New Mexico—NO_2 (2010 1-Hour Standard)

Designated area	Designation [a]	
	Date [1]	Type
Bernalillo County		Unclassifiable/Attainment.

New Mexico—NO_2 (2010 1-Hour Standard)

Designated area	Designation [a]	
	Date [1]	Type
Catron County		Unclassifiable/Attainment.
Chaves County		Unclassifiable/Attainment.
Cibola County		Unclassifiable/Attainment.
Colfax County		Unclassifiable/Attainment.
Curry County		Unclassifiable/Attainment.
De Baca County		Unclassifiable/Attainment.
Doña Ana County		Unclassifiable/Attainment.
Eddy County		Unclassifiable/Attainment.
Grant County		Unclassifiable/Attainment.
Guadalupe County		Unclassifiable/Attainment.
Harding County		Unclassifiable/Attainment.
Hidalgo County		Unclassifiable/Attainment.
Lea County		Unclassifiable/Attainment.
Lincoln County		Unclassifiable/Attainment.
Los Alamos County		Unclassifiable/Attainment.
Luna County		Unclassifiable/Attainment.
McKinley County		Unclassifiable/Attainment.
Mora County		Unclassifiable/Attainment.
Otero County		Unclassifiable/Attainment.
Quay County		Unclassifiable/Attainment.
Río Arriba County		Unclassifiable/Attainment.
Roosevelt County		Unclassifiable/Attainment.
Sandoval County		Unclassifiable/Attainment.
San Juan County		Unclassifiable/Attainment.
San Miguel County		Unclassifiable/Attainment.
Santa Fe County		Unclassifiable/Attainment.
Sierra County		Unclassifiable/Attainment.
Socorro County		Unclassifiable/Attainment.
Taos County		Unclassifiable/Attainment.
Torrance County		Unclassifiable/Attainment.
Union County		Unclassifiable/Attainment.
Valencia County		Unclassifiable/Attainment.

[a] Includes Indian Country located in each county or area, except as otherwise specified.
[1] This date is 90 days after October 31, 2011, unless otherwise noted.

New Mexico—Ozone (8-Hour Standard)

Designated area	Designation [a]		Category/classification	
	Date [1]	Type	Date [1]	Type
AQCR 012 New Mexico-Southern Border Intrastate		Unclassifiable/Attainment		
Grant County				
Hidalgo County				
Luna County				
AQCR 014 Four Corners Interstate (*see* 40 CFR 81.121).		Unclassifiable/Attainment		
McKinley County (part)				
Río Arriba County (part)				
San Juan County				
Sandoval County (part)				
Valencia County (part)				
AQCR 152 Albuquerque-Mid Rio Grande Intrastate		Unclassifiable/Attainment		
Bernalillo County (part)				
AQCR 152 Albuquerque-Mid Rio Grande		Unclassifiable/Attainment		
Sandoval County (part) *see* 40 CFR 81.83				
Valencia County (part) *see* 40 CFR 81.83				
AQCR 153 El Paso-Las Cruces-Alamogordo		Unclassifiable/Attainment		
Doña Ana County (part) (Sunland Park Area) The Area bounded by the New Mexico-Texas State line on the east, the New Mexico-Mexico international line on the south, the Range 3E-Range 2E line on the west, and the N3200 latitude line on the north.				
Doña Ana County (part) remainder		Unclassifiable/Attainment		
Lincoln County		Unclassifiable/Attainment		
Otero County		Unclassifiable/Attainment		
Sierra County		Unclassifiable/Attainment		
AQCR 154 Northeastern Plains Intrastate		Unclassifiable/Attainment		
Colfax County				

New Mexico—Ozone (8-Hour Standard)

Designated area	Designation [a]		Category/classification	
	Date [1]	Type	Date [1]	Type
Guadalupe County				
Harding County				
Mora County				
San Miguel County				
Torrance County				
Union County				
AQCR 155 Pecos-Permian Basin Intrastate	.....	Unclassifiable/Attainment		
Chaves County				
Curry County				
De Baca County				
Eddy County				
Lea County				
Quay County				
Roosevelt County				
AQCR 156 SW Mountains-Augustine Plains	.....	Unclassifiable/Attainment		
Catron County				
Cibola County				
McKinley County (part) *see* 40 CFR 81.241				
Socorro County				
Valencia County (part) *see* 40 CFR 81.241				
AQCR 157 Upper Rio Grande Valley Intrastate	.....	Unclassifiable/Attainment		
Los Alamos County				
Río Arriba County (part) *see* 40 CFR 81.239				
Santa Fe County				
Taos County				

[a] Includes Indian Country located in each county or area, except as otherwise specified.
[1] This date is June 15, 2004, unless otherwise noted.

New Mexico—$PM_{2.5}$ (Annual NAAQS)

Designated area	Designation [a]	
	Date [1]	Type
AQCR 012 New Mexico-Southern Border Intrastate:		
Grant County	.....	Unclassifiable/Attainment.
Hidalgo County	.....	Unclassifiable/Attainment.
Luna County	.....	Unclassifiable/Attainment.
AQCR 014 Four Corners Interstate (see 40 CFR 81.121):		
McKinley County (part)	.....	Unclassifiable/Attainment.
Río Arriba County (part)	.....	Unclassifiable/Attainment.
Sandoval County (part)	.....	Unclassifiable/Attainment.
San Juan County	.....	Unclassifiable/Attainment.
Valencia County (part)	.....	Unclassifiable/Attainment.
AQCR 152 Albuquerque-Mid Rio Grande Intrastate:		
Bernalillo County	.....	Unclassifiable/Attainment.
Sandoval County (part) see 40 CFR 81.83	.....	Unclassifiable/Attainment.
Valencia County (part) see 40 CFR 81.83	.....	Unclassifiable/Attainment.
AQCR 153 El Paso-Las Cruces-Alamogordo:		
Doña Ana County (part)	.....	Unclassifiable/Attainment.
(Sunland Park Area) The area bounded by the New Mexico-Texas State line on the east, New Mexico-Mexico international line on the south, the range 3E-Range 2E line on the west, and the N3200 latitude line on the north.		
Doña Ana County (remainder)	.....	Unclassifiable/Attainment.
Lincoln County	.....	Unclassifiable/Attainment.
Otero County	.....	Unclassifiable/Attainment.
Sierra County	.....	Unclassifiable/Attainment.
AQCR 154 Northeastern Plains Intrastate:		
Colfax County	.....	Unclassifiable/Attainment.
Guadalupe County	.....	Unclassifiable/Attainment.
Harding County	.....	Unclassifiable/Attainment.
Mora County	.....	Unclassifiable/Attainment.
San Miguel County	.....	Unclassifiable/Attainment.
Torrance County	.....	Unclassifiable/Attainment.
Union County	.....	Unclassifiable/Attainment.
AQCR 155 Pecos-Permian Basin Intrastate:		
Chaves County	.....	Unclassifiable/Attainment.
Curry County	.....	Unclassifiable/Attainment.
De Baca County	.....	Unclassifiable/Attainment.

New Mexico—$PM_{2.5}$ (Annual NAAQS)

Designated area	Designation [a]	
	Date [1]	Type
Eddy County		Unclassifiable/Attainment.
Lea County		Unclassifiable/Attainment.
Quay County		Unclassifiable/Attainment.
Roosevelt County		Unclassifiable/Attainment.
AQCR 156 SW Mountains-Augustine Plains:		
Catron County		Unclassifiable/Attainment.
Cibola County		Unclassifiable/Attainment.
McKinley County (part) see 40 CFR 81.241		Unclassifiable/Attainment.
Socorro County		Unclassifiable/Attainment.
Valencia County (part) see 40 CFR 81.241		Unclassifiable/Attainment.
AQCR 157 Upper Rio Grande Valley Intrastate:		
Los Alamos County		Unclassifiable/Attainment.
Río Arriba County (part) see 40 CFR 81.239		Unclassifiable/Attainment.
Santa Fe County		Unclassifiable/Attainment.
Taos County		Unclassifiable/Attainment.

[a] Includes Indian Country located in each county or area, except as otherwise specified.
[1] This date is 90 days after January 5, 2005, unless otherwise noted.

New Mexico—$PM_{2.5}$ [24-hour NAAQS]

Designated area	Designation for the 1997 NAAQS [a]		Designation for the 2006 NAAQS [a]	
	Date [1]	Type	Date [2]	Type
AQCR 222 New Mexico-Southern Border Intrastate:				
Grant County		Unclassifiable/Attainment		Unclassifiable/Attainment.
Hidalgo County		Unclassifiable/Attainment		Unclassifiable/Attainment.
Luna County		Unclassifiable/Attainment		Unclassifiable/Attainment.
AQCR 224 Four Corners Interstate (see 40 CFR 81.121):				
McKinley County (part)		Unclassifiable/Attainment		Unclassifiable/Attainment.
Río Arriba County (part)		Unclassifiable/Attainment		Unclassifiable/Attainment.
Sandoval County (part)		Unclassifiable/Attainment		Unclassifiable/Attainment.
San Juan County		Unclassifiable/Attainment		Unclassifiable/Attainment.
Valencia County (part)		Unclassifiable/Attainment		Unclassifiable/Attainment.
AQCR 152 Albuquerque-Mid Rio Grande Intrastate:				
Bernalillo County		Unclassifiable/Attainment		Unclassifiable/Attainment.
Sandoval County (part)		Unclassifiable/Attainment		Unclassifiable/Attainment.
Valencia County (part)		Unclassifiable/Attainment		Unclassifiable/Attainment.
AQCR 153 El Paso-Las Cruces-Alamogordo:				
Doña Ana County (part)		Unclassifiable/Attainment		Unclassifiable/Attainment.
(Sunland Park Area) The area bounded by the New Mexico-Texas State line on the east, New Mexico-Mexico international line on the south, the range 3E-Range 2E line on the west, and the N3200 latitude line on the north.				
Doña Ana County (remainder)		Unclassifiable/Attainment		Unclassifiable/Attainment.
Lincoln County		Unclassifiable/Attainment		Unclassifiable/Attainment.

New Mexico—$PM_{2.5}$ [24-hour NAAQS]

Designated area	Designation for the 1997 NAAQS [a]		Designation for the 2006 NAAQS [a]	
	Date [1]	Type	Date [2]	Type
Otero County		Unclassifiable/Attainment		Unclassifiable/Attainment.
Sierra County		Unclassifiable/Attainment		Unclassifiable/Attainment.
AQCR 154 Northeastern Plains Intrastate:				
Colfax County		Unclassifiable/Attainment		Unclassifiable/Attainment.
Guadalupe County		Unclassifiable/Attainment		Unclassifiable/Attainment.
Harding County		Unclassifiable/Attainment		Unclassifiable/Attainment.
Mora County		Unclassifiable/Attainment		Unclassifiable/Attainment.
San Miguel County		Unclassifiable/Attainment		Unclassifiable/Attainment.
Torrance County		Unclassifiable/Attainment		Unclassifiable/Attainment.
Union County		Unclassifiable/Attainment		Unclassifiable/Attainment.
AQCR 155 Pecos-Permian Basin Intrastate:				
Chaves County		Unclassifiable/Attainment		Unclassifiable/Attainment.
Curry County		Unclassifiable/Attainment		Unclassifiable/Attainment.
De Baca County		Unclassifiable/Attainment		Unclassifiable/Attainment.
Eddy County		Unclassifiable/Attainment		Unclassifiable/Attainment.
Lea County		Unclassifiable/Attainment		Unclassifiable/Attainment.
Quay County		Unclassifiable/Attainment		Unclassifiable/Attainment.
Roosevelt County		Unclassifiable/Attainment		Unclassifiable/Attainment.
AQCR 156 SW Mountains-Augustine Plains:				
Catron County		Unclassifiable/Attainment		Unclassifiable/Attainment.
Cibola County		Unclassifiable/Attainment		Unclassifiable/Attainment.
McKinley County (part) see 40 CFR 81.241.		Unclassifiable/Attainment		Unclassifiable/Attainment.
Socorro County		Unclassifiable/Attainment		Unclassifiable/Attainment.
Valencia County (part) see 40 CFR 81.241.		Unclassifiable/Attainment		Unclassifiable/Attainment.
AQCR 157 Upper Rio Grande Valley Intrastate:				
Los Alamos County		Unclassifiable/Attainment		Unclassifiable/Attainment.
Río Arriba County (part) see 40 CFR 81.239.		Unclassifiable/Attainment		Unclassifiable/Attainment.
Santa Fe County		Unclassifiable/Attainment		Unclassifiable/Attainment.
Taos County		Unclassifiable/Attainment		Unclassifiable/Attainment.

[a] Includes Indian Country located in each county or area, except as otherwise specified.
[1] This date is 90 days after January 5, 2005, unless otherwise noted.
[2] This date is 30 days after November 13, 2009, unless otherwise noted.

New Mexico—2008 Lead NAAQS

Designated area	Designation for the 2008 NAAQS [a]	
	Date [1]	Type
Whole State		Unclassifiable/Attainment.

[a] Includes Indian Country located in each county or area, except as otherwise specified.
[1] December 31, 2011 unless otherwise noted.

[43 FR 8964, Mar. 3, 1978]

EDITORIAL NOTE: For FEDERAL REGISTER citations affecting § 81.332 see the List of CFR Sections Affected, which appears in the Finding Aids section of the printed volume and at *www.fdsys.gov*.

EFFECTIVE DATE NOTE: At 77 FR 30135, May 21, 2012, § 81.332 was amended by revising the table heading for ''New Mexico—Ozone (8-Hour Standard)'' to read ''New Mexico—1997 8-Hour Ozone NAAQS (Primary and Secondary)''; by adding a new table entitled ''New Mexico—2008 8-Hour Ozone NAAQS (Primary and Secondary)'' following the newly designated table ''New Mexico—1997 8-Hour Ozone NAAQS (Primary and Secondary)'', effective July 20, 2012. For the convenience of the user, the added text is set forth as follows:

§ 81.332 New Mexico.

* * * * *

New Mexico—2008 8-Hour Ozone NAAQS (Primary and secondary)

Designated area [1]	Designation		Classification	
	Date [2]	Type	Date [2]	Type
AQCR 012 New Mexico–Southern Border Intrastate:				
Grant County		Unclassifiable/Attainment		
Hidalgo County		Unclassifiable/Attainment		
Luna County		Unclassifiable/Attainment		
AQCR 014 Four Corners Interstate (see 40 CFR 81.121):				
McKinley County (part)		Unclassifiable/Attainment		
Río Arriba County (part)		Unclassifiable/Attainment		
Sandoval County (part)		Unclassifiable/Attainment		
San Juan County		Unclassifiable/Attainment		
Valencia County (part)		Unclassifiable/Attainment		
AQCR 152 Albuquerque–Mid Rio Grande Intrastate (see 40 CFR 81.83):				
Bernalillo County		Unclassifiable/Attainment		
Sandoval County (part)		Unclassifiable/Attainment		
Valencia County (part)		Unclassifiable/Attainment		
AQCR 153 El Paso–Las Cruces–Alamogordo Interstate:				
Doña Ana County		Unclassifiable/Attainment		
Lincoln County		Unclassifiable/Attainment		
Otero County		Unclassifiable/Attainment		
Sierra County		Unclassifiable/Attainment		
AQCR 154 Northeastern Plains Intrastate:				
Colfax County		Unclassifiable/Attainment		
Guadalupe County		Unclassifiable/Attainment		
Harding County		Unclassifiable/Attainment		
Mora County		Unclassifiable/Attainment		
San Miguel County		Unclassifiable/Attainment		
Torrance County		Unclassifiable/Attainment		
Union County		Unclassifiable/Attainment		
AQCR 155 Pecos–Permian Basin Intrastate:				
Chaves County		Unclassifiable/Attainment		
Curry County		Unclassifiable/Attainment		
De Baca County		Unclassifiable/Attainment		
Eddy County		Unclassifiable/Attainment		
Lea County		Unclassifiable/Attainment		
Quay County		Unclassifiable/Attainment		
Roosevelt County		Unclassifiable/Attainment		
AQCR 156 SW Mountains–Augustine Plains (see 40 CFR 81.241):				
Catron County		Unclassifiable/Attainment		
Cibola County		Unclassifiable/Attainment		
McKinley County (part)		Unclassifiable/Attainment		
Socorro County		Unclassifiable/Attainment		
Valencia County (part)		Unclassifiable/Attainment		
AQCR 157 Upper Rio Grande Valley Intrastate (see 40 CFR 81.239):				
Los Alamos County		Unclassifiable/Attainment		
Río Arriba County (part)		Unclassifiable/Attainment		
Santa Fe County		Unclassifiable/Attainment		
Taos County		Unclassifiable/Attainment		

[1] Includes any Indian country in each county or area, unless otherwise specified.
[2] This date is July 20, 2012, unless otherwise noted.

* * * * *

§ 81.333 New York.

New York—SO_2

Designated area	Does not meet primary standards	Does not meet secondary standards	Cannot be classified	Better than national standards
Niagara Frontier AQCR				X
Genesee-Finger Lakes AQCR				X
Southern Tier West AQCR				X
Southern Tier East AQCR				X
Central AQCR				X
Northern (Champlain Valley) AQCR				X
Hudson Valley AQCR				X
New Jersey-New York-Connecticut Interstate AQCR:				
The Borough of Manhattan (except between 59th and 125th Sts.)			X	
The Boroughs of Brooklyn and Queens (south of the Queensborough Bridge and Queens Blvd., west of 44th St., west of I–278, and north of the Brooklyn Bridge.)			X	
The Borough of the Bronx (south of I–95 and west of I–278)			X	
Remainder of AQCR				X

New York—Carbon Monoxide

Designated Area	Designation		Classification	
	Date [1]	Type	Date [1]	Type
New York-N. New Jersey-Long Island Area	5/20/02	Attainment		
Bronx County.				
Kings County.				
Nassau County.				
New York County.				
Queens County.				
Richmond County.				
Westchester County.				
Syracuse Area				
Onondaga County	9/29/93	Unclassifiable/attainment		
AQCR 043 NJ-NY-CT Interstate AQCR (Remainder of).		Unclassifiable/Attainment		
Rockland County				
Suffolk County				
AQCR 158 Central New York Intrastate (Remainder of).		Unclassifiable/Attainment		
Cayuga County				
Cortland County				
Herkimer County				
Jefferson County				
Lewis County				
Madison County				
Oneida County				
Oswego County				
AQCR 159 Champlain Valley Interstate		Unclassifiable/Attainment		
Clinton County				
Essex County				
Franklin County				
Hamilton County				
St. Lawrence County				
Warren County				
Washington County				
AQCR 160 Genessee-Finger Lakes Intrastate		Unclassifiable/Attainment		
Genesee County				
Livingston County				
Monroe County				
Ontario County				
Orleans County				
Seneca County				
Wayne County				
Wyoming County				
Yates County				
AQCR 161 Hudson Valley Intrastate		Unclassifiable/Attainment		
Albany County				

New York—Carbon Monoxide

Designated Area	Designation		Classification	
	Date [1]	Type	Date [1]	Type
Columbia County				
Dutchess County				
Fulton County				
Greene County				
Montgomery County				
Orange County				
Putnam County				
Rensselaer County				
Saratoga County				
Schenectady County				
Schoharie County				
Ulster County				
AQCR 162 Niagara Frontier Intrastate	.....	Unclassifiable/Attainment		
Erie County				
Niagara County				
AQCR 163 Southern Tier East Intrastate	.....	Unclassifiable/Attainment		
Broome County				
Chenango County				
Delaware County				
Otsego County				
Sullivan County				
Tioga County				
AQCR 164 Southern Tier West Intrastate	.....	Unclassifiable/Attainment		
Allegany County				
Cattaraugus County				
Chautauqua County				
Chemung County				
Schuyler County				
Steuben County				
Tompkins County				

[1] This date is November 15, 1990, unless otherwise noted.

New York—1978 Lead NAAQS

Designated Area	Designation		Classification	
	Date	Type	Date	Type
Onondaga County	1/6/92	Unclassifiable		
Rest of State Not Designated				

New York—Ozone (1-Hour Standard)[3]

Designated area	Designation		Classification	
	Date [1]	Type	Date [1]	Type
Albany-Schenectady-Troy Area:				
Albany County	(2)	Nonattainment	(2)	Marginal.
Greene County	(2)	Nonattainment	(2)	Marginal.
Montgomery County	(2)	Nonattainment	(2)	Marginal.
Rensselaer County	(2)	Nonattainment	(2)	Marginal.
Saratoga County	(2)	Nonattainment	(2)	Marginal.
Schenectady County	(2)	Nonattainment	(2)	Marginal.
Buffalo-Niagara Falls Area:				
Erie County	(2)	Nonattainment	(2)	Marginal.
Niagara County	(2)	Nonattainment	(2)	Marginal.
Essex County Area:				
Essex County (part) The portion of Whiteface Mountain above 4500 feet in elevation in Essex County.	(2)	Nonattainment	(2)	Rural Transport (Marginal).
Jefferson County Area:				
Jefferson County	(2)	Nonattainment	(2)	Marginal.
New York-Northern New Jersey-Long Island Area:				
Bronx County	11/15/90	Nonattainment	11/15/90	Severe-17.
Kings County	11/15/90	Nonattainment	11/15/90	Severe-17.
Nassau County	11/15/90	Nonattainment	11/15/90	Severe-17.
New York County	11/15/90	Nonattainment	11/15/90	Severe-17.
Orange County (part) Blooming Grove, Chester, Highlands, Monroe, Tuxedo, Warwick, and Woodbury.	1/15/92	Nonattainment	1/15/92	Severe-17.
Queens County	11/15/90	Nonattainment	11/15/90	Severe-17.

New York—Ozone (1-Hour Standard)[3]

Designated area	Designation		Classification	
	Date [1]	Type	Date [1]	Type
Richmond County	11/15/90	Nonattainment	11/15/90	Severe-17.
Rockland County	11/15/90	Nonattainment	11/15/90	Severe-17.
Suffolk County	11/15/90	Nonattainment	11/15/90	Severe-17.
Westchester County	11/15/90	Nonattainment	11/15/90	Severe-17.
Poughkeepsie Area:				
Dutchess County	(2)	Nonattainment	(2)	Moderate.
Orange County (remainder)	(2)	Nonattainment	(2)	Moderate.
Putnam County	(2)	Nonattainment	(2)	Moderate.
AQCR 158 Central New York Intrastate (Remainder of)	.....	Unclassifiable/Attainment		
Cayuga County				
Cortland County				
Herkimer County				
Lewis County				
Madison County				
Oneida County				
Onondaga County				
Oswego County				
AQCR 159 Champlain Valley Interstate (Remainder of)	.....	Unclassifiable/Attainment		
Clinton County				
Franklin County				
Hamilton County				
St. Lawrence County				
Warren County				
Washington County				
AQCR 160 Genessee-Finger Lakes Intrastate	.....	Unclassifiable/Attainment		
Genessee County				
Livingston County				
Monroe County				
Ontario County				
Orleans County				
Seneca County				
Wayne County				
Wyoming County				
Yates County				
AQCR 161 Hudson Valley Intrastate (Remainder of)	.....	Unclassifiable/Attainment		
Columbia County				
Fulton County				
Schoharie County				
Ulster County				
AQCR 163 Southern Tier East Intrastate	.....	Unclassifiable/Attainment		
Broome County				
Chenango County				
Delaware County				
Otsego County				
Sullivan County				
Tioga County				
AQCR 164 Southern Tier West Intrastate	.....	Unclassifiable/Attainment		
Allegany County				
Cattaraugus County				
Chautauqua County				
Chemung County				
Schuyler County				
Steuben County				
Tompkins County				

[1] This date is October 18, 2000, unless otherwise noted.
[2] This date is January 16, 2001.
[3] The 1-hour ozone standard is revoked effective June 15, 2005 for all areas in New York.

New York—PM–10

Designated area	Designation		Classification	
	Date	Type	Date	Type
New York County	1/20/94	Nonattainment	1/20/94	Moderate

New York—NO_2 (1971 Annual Standard)

Designated area	Does not meet primary standards	Cannot be classified or better than national standards
Niagara Frontier AQCR		X
Genesee-Finger Lakes AQCR		X
Southern Tier West AQCR		X
Southern Tier East AQCR		X
Central AQCR		X
Northern (Champlain Valley) AQCR		X
Hudson Valley AQCR		X
New Jersey-New York-Connecticut Interstate AQCR		X

New York—NO_2 (2010 1-Hour Standard)

Designated area	Designation [a]	
	Date [1]	Type
Albany-Schenectady-Troy, NY:		
Albany County		Unclassifiable/Attainment.
Rensselaer County		Unclassifiable/Attainment.
Saratoga County		Unclassifiable/Attainment.
Schenectady County		Unclassifiable/Attainment.
Schoharie County		Unclassifiable/Attainment.
Buffalo-Niagara Falls, NY:		
Erie County		Unclassifiable/Attainment.
Niagara County		Unclassifiable/Attainment.
New York-Northern New Jersey-Long Island, NY:		
Bronx County		Unclassifiable/Attainment.
Kings County		Unclassifiable/Attainment.
Nassau County		Unclassifiable/Attainment.
New York County		Unclassifiable/Attainment.
Putnam County		Unclassifiable/Attainment.
Queens County		Unclassifiable/Attainment.
Richmond County		Unclassifiable/Attainment.
Rockland County		Unclassifiable/Attainment.
Suffolk County		Unclassifiable/Attainment.
Westchester County		Unclassifiable/Attainment.
Poughkeepsie-Newburgh-Middletown, NY:		
Dutchess County		Unclassifiable/Attainment.
Orange County		Unclassifiable/Attainment.
Rochester, NY:		
Livingston County		Unclassifiable/Attainment.
Monroe County		Unclassifiable/Attainment.
Ontario County		Unclassifiable/Attainment.
Orleans County		Unclassifiable/Attainment.
Wayne County		Unclassifiable/Attainment.
Syracuse, NY:		
Madison County		Unclassifiable/Attainment.
Onondaga County		Unclassifiable/Attainment.
Oswego County		Unclassifiable/Attainment.
Rest of State		Unclassifiable/Attainment.

[a] Includes Indian Country located in each county or area, except as otherwise specified.
[1] This date is 90 days after October 31, 2011, unless otherwise noted.

New York—Ozone (8-Hour Standard)

Designated area	Designation [a]		Category/classification	
	Date [1]	Type	Date [1]	Type
Albany-Schenectady-Troy, NY:				
Albany County		Nonattainment	6/13/12	Subpart 2/Marginal.
Greene County		Nonattainment	6/13/12	Subpart 2/Marginal.
Montgomery County		Nonattainment	6/13/12	Subpart 2/Marginal.
Rensselaer County		Nonattainment	6/13/12	Subpart 2/Marginal.
Saratoga County		Nonattainment	6/13/12	Subpart 2/Marginal.
Schenectady County		Nonattainment	6/13/12	Subpart 2/Marginal.
Schoharie County		Nonattainment	6/13/12	Subpart 2/Marginal.
Buffalo-Niagara Falls, NY:				
Erie County		Nonattainment	6/13/12	Subpart 2/Moderate.
Niagara County		Nonattainment	6/13/12	Subpart 2/Moderate.
Essex County (Whiteface Mtn.), NY:				
Essex County (part).				

New York—Ozone (8-Hour Standard)

Designated area	Designation [a]		Category/classification	
	Date [1]	Type	Date [1]	Type
The portion of Whiteface Mountain above 1,900 feet in elevation in Essex County.	.....	Nonattainment	6/13/12	Subpart 2/Marginal.
Essex County (remainder)	.....	Unclassifiable/Attainment		
Jamestown, NY:				
Chautauqua County	.....	Nonattainment	6/13/12	Subpart 2/Moderate.
Jefferson County, NY:				
Jefferson County	.....	Nonattainment	.....	Subpart 2/Moderate.
New York-N. New Jersey-Long Island, NY-NJ-CT:				
Bronx County	.....	Nonattainment	.....	Subpart 2/Moderate.
Kings County	.....	Nonattainment	.....	Subpart 2/Moderate.
Nassau County	.....	Nonattainment	.....	Subpart 2/Moderate.
New York County	.....	Nonattainment	.....	Subpart 2/Moderate.
Queens County	.....	Nonattainment	.....	Subpart 2/Moderate.
Richmond County	.....	Nonattainment	.....	Subpart 2/Moderate.
Rockland County	.....	Nonattainment	.....	Subpart 2/Moderate.
Suffolk County	.....	Nonattainment	.....	Subpart 2/Moderate.
Westchester County	.....	Nonattainment	.....	Subpart 2/Moderate.
Poughkeepsie, NY:				
Dutchess County	.....	Nonattainment	.....	Subpart 2/Moderate.
Orange County	.....	Nonattainment	.....	Subpart 2/Moderate.
Putnam County	.....	Nonattainment	.....	Subpart 2/Moderate.
Syracuse, NY:				
Cayuga County	6/14/06	Attainment		
Madison County	6/14/06	Attainment		
Onondaga County	6/14/06	Attainment		
Oswego County	6/14/06	Attainment		
Rochester, NY:				
Genesee County	.....	Nonattainment	6/13/12	Subpart 2/Marginal.
Livingston County	.....	Nonattainment	6/13/12	Subpart 2/Marginal.
Monroe County	.....	Nonattainment	6/13/12	Subpart 2/Marginal.
Ontario County	.....	Nonattainment	6/13/12	Subpart 2/Marginal.
Orleans County	.....	Nonattainment	6/13/12	Subpart 2/Marginal.
Wayne County	.....	Nonattainment	6/13/12	Subpart 2/Marginal.
AQCR 158 Central New York Intrastate (remainder of).	.....	Unclassifiable/Attainment		
Cortland County				
Herkimer County				
Lewis County				
Oneida County				
AQCR 159 Champlain Valley Interstate (remainder of).	.....	Unclassifiable/Attainment		
Clinton County				
Franklin County				
Hamilton County				
St. Lawrence County				
Warren County				
Washington County				
AQCR 160 Finger Lake Intrastate	.....	Unclassifiable/Attainment		
Seneca County				
Wyoming County				
Yates County				
AQCR 161 Hudson Valley Intrastate (remainder of).	.....	Unclassifiable/Attainment		
Columbia County.				
Fulton County				
Ulster County				
AQCR 163 Southern Tier East Intrastate	.....	Unclassifiable/Attainment		
Broome County				
Chenango County				
Delaware County				
Otsego County				
Sullivan County				
Tioga County				
AQCR 164 Southern Tier West Intrastate	.....	Unclassifiable/Attainment		
Allegany County				
Cattaraugus County				
Chemung County				
Schuyler County				
Steuben County				

New York—Ozone (8-Hour Standard)

Designated area	Designation [a]		Category/classification	
	Date [1]	Type	Date [1]	Type
Tompkins County				

[a] Includes Indian Country located in each county or area, except as otherwise specified.
[1] This date is June 15, 2004, unless otherwise noted.

New York—$PM_{2.5}$ (Annual NAAQS)

Designated area	Designation [a]	
	Date [1]	Type
New York-N. New Jersey-Long Island, NY-NJ-CT:		
Bronx County		Nonattainment.
Kings County		Nonattainment.
Nassau County		Nonattainment.
New York County		Nonattainment.
Orange County		Nonattainment.
Queens County		Nonattainment.
Richmond County		Nonattainment.
Rockland County		Nonattainment.
Suffolk County		Nonattainment.
Westchester County		Nonattainment.
AQCR 158 Central New York Intrastate (remainder of):		
Cortland County		Unclassifiable/Attainment.
Herkimer County		Unclassifiable/Attainment.
Lewis County		Unclassifiable/Attainment.
Oneida County		Unclassifiable/Attainment.
AQCR 159 Champlain Valley Interstate (remainder of):		
Clinton County		Unclassifiable/Attainment.
Franklin County		Unclassifiable/Attainment.
Hamilton County		Unclassifiable/Attainment.
St. Lawrence County		Unclassifiable/Attainment.
Warren County		Unclassifiable/Attainment.
Washington County		Unclassifiable/Attainment.
AQCR 160 Finger Lake Intrastate:		
Seneca County		Unclassifiable/Attainment.
Wyoming County		Unclassifiable/Attainment.
Yates County		Unclassifiable/Attainment.
AQCR 161 Hudson Valley Intrastate (remainder of):		
Columbia County		Unclassifiable/Attainment.
Fulton County		Unclassifiable/Attainment.
Ulster County		Unclassifiable/Attainment.
AQCR 163 Southern Tier East Intrastate:		
Broome County		Unclassifiable/Attainment.
Chenango County		Unclassifiable/Attainment.
Delaware County		Unclassifiable/Attainment.
Otsego County		Unclassifiable/Attainment.
Sullivan County		Unclassifiable/Attainment.
Tioga County		Unclassifiable/Attainment.
AQCR 164 Southern Tier West Intrastate:		
Allegany County		Unclassifiable/Attainment.
Cattaraugus County		Unclassifiable/Attainment.
Chemung County		Unclassifiable/Attainment.
Schuyler County		Unclassifiable/Attainment.
Steuben County		Unclassifiable/Attainment.
Tompkins County		Unclassifiable/Attainment.
Albany-Schenectady-Troy, NY:		
Albany County		Unclassifiable/Attainment.
Greene County		Unclassifiable/Attainment.
Montgomery County		Unclassifiable/Attainment.
Rensselaer County		Unclassifiable/Attainment.
Saratoga County		Unclassifiable/Attainment.
Schenectady County		Unclassifiable/Attainment.
Schoharie County		Unclassifiable/Attainment.
Buffalo-Niagara Falls, NY:		
Erie County		Unclassifiable/Attainment.
Niagara County		Unclassifiable/Attainment.
Essex County, NY:		
Essex County		Unclassifiable/Attainment.
Jamestown, NY:		
Chautauqua County		Unclassifiable/Attainment.
Jefferson County, NY:		

New York—$PM_{2.5}$ (Annual NAAQS)

Designated area	Designation [a]	
	Date [1]	Type
Jefferson County		Unclassifiable/Attainment.
Poughkeepsie, NY:		
Dutchess County		Unclassifiable/Attainment.
Putnam County		Unclassifiable/Attainment.
Rochester, NY:		
Genesee County		Unclassifiable/Attainment.
Livingston County		Unclassifiable/Attainment.
Monroe County		Unclassifiable/Attainment.
Ontario County		Unclassifiable/Attainment.
Orleans County		Unclassifiable/Attainment.
Wayne County		Unclassifiable/Attainment.
Syracuse, NY:		
Cayuga County		Unclassifiable/Attainment.
Madison County		Unclassifiable/Attainment.
Onondaga County		Unclassifiable/Attainment.
Oswego County		Unclassifiable/Attainment.

[a] Includes Indian Country located in each county or area, except as otherwise specified.
[1] This date is 90 days after January 5, 2005, unless otherwise noted.

New York—$PM_{2.5}$ [24-hour NAAQS]

Designated area	Designation for the 1997 NAAQS [a]		Designation for the 2006 NAAQS [a]	
	Date [1]	Type	Date [2]	Type
New York-N. New Jersey-Long Island, NY-NJ-CT:				
Bronx County		Unclassifiable/Attainment.		Nonattainment.
Kings County		Unclassifiable/Attainment.		Nonattainment.
Nassau County		Unclassifiable/Attainment.		Nonattainment.
New York County		Unclassifiable/Attainment.		Nonattainment.
Orange County		Unclassifiable/Attainment.		Nonattainment.
Queens County		Unclassifiable/Attainment.		Nonattainment.
Richmond County		Unclassifiable/Attainment.		Nonattainment.
Rockland County		Unclassifiable/Attainment.		Nonattainment.
Suffolk County		Unclassifiable/Attainment.		Nonattainment.
Westchester County		Unclassifiable/Attainment.		Nonattainment.
Rest of State:				
AQCR 158 Central New York Intrastate (remainder of):				
Cortland County		Unclassifiable/Attainment.		Unclassifiable/Attainment.
Herkimer County		Unclassifiable/Attainment.		Unclassifiable/Attainment.
Lewis County		Unclassifiable/Attainment.		Unclassifiable/Attainment.
Oneida County		Unclassifiable/Attainment.		Unclassifiable/Attainment.
AQCR 159 Champlain Valley Interstate (remainder of):				
Clinton County		Unclassifiable/Attainment.		Unclassifiable/Attainment.
Franklin County		Unclassifiable/Attainment.		Unclassifiable/Attainment.
Hamilton County		Unclassifiable/Attainment.		Unclassifiable/Attainment.
St. Lawrence County		Unclassifiable/Attainment.		Unclassifiable/Attainment.
Warren County		Unclassifiable/Attainment.		Unclassifiable/Attainment.
Washington County		Unclassifiable/Attainment.		Unclassifiable/Attainment.

New York—$PM_{2.5}$ [24-hour NAAQS]

Designated area	Designation for the 1997 NAAQS [a]		Designation for the 2006 NAAQS [a]	
	Date [1]	Type	Date [2]	Type
AQCR 160 Finger Lake Intrastate:				
Seneca County		Unclassifiable/Attainment.		Unclassifiable/Attainment.
Wyoming County		Unclassifiable/Attainment.		Unclassifiable/Attainment.
Yates County		Unclassifiable/Attainment.		Unclassifiable/Attainment.
AQCR 161 Hudson Valley Intrastate (remainder of):				
Columbia County		Unclassifiable/Attainment.		Unclassifiable/Attainment.
Fulton County		Unclassifiable/Attainment.		Unclassifiable/Attainment.
Ulster County		Unclassifiable/Attainment.		Unclassifiable/Attainment.
AQCR 163 Southern Tier East Intrastate:				
Broome County		Unclassifiable/Attainment.		Unclassifiable/Attainment.
Chenango County		Unclassifiable/Attainment.		Unclassifiable/Attainment.
Delaware County		Unclassifiable/Attainment.		Unclassifiable/Attainment.
Otsego County		Unclassifiable/Attainment.		Unclassifiable/Attainment.
Sullivan County		Unclassifiable/Attainment.		Unclassifiable/Attainment.
Tioga County		Unclassifiable/Attainment.		Unclassifiable/Attainment.
AQCR 164 Southern Tier West Intrastate:				
Allegany County		Unclassifiable/Attainment.		Unclassifiable/Attainment.
Cattaraugus County		Unclassifiable/Attainment.		Unclassifiable/Attainment.
Chemung County		Unclassifiable/Attainment.		Unclassifiable/Attainment.
Schuyler County		Unclassifiable/Attainment.		Unclassifiable/Attainment.
Steuben County		Unclassifiable/Attainment.		Unclassifiable/Attainment.
Tompkins County		Unclassifiable/Attainment.		Unclassifiable/Attainment.
Albany-Schenectady-Troy, NY:				
Albany County		Unclassifiable/Attainment.		Unclassifiable/Attainment.
Greene County		Unclassifiable/Attainment.		Unclassifiable/Attainment.
Montgomery County		Unclassifiable/Attainment.		Unclassifiable/Attainment.
Rensselaer County		Unclassifiable/Attainment.		Unclassifiable/Attainment.
Saratoga County		Unclassifiable/Attainment.		Unclassifiable/Attainment.
Schenectady County		Unclassifiable/Attainment.		Unclassifiable/Attainment.
Schoharie County		Unclassifiable/Attainment.		Unclassifiable/Attainment.
Buffalo-Niagara Falls, NY:				
Erie County		Unclassifiable/Attainment.		Unclassifiable/Attainment.
Niagara County		Unclassifiable/Attainment.		Unclassifiable/Attainment.
Essex County, NY:				
Essex County		Unclassifiable/Attainment.		Unclassifiable/Attainment.
Jamestown, NY:				
Chautauqua County		Unclassifiable/Attainment.		Unclassifiable/Attainment.
Jefferson County, NY:				
Jefferson County		Unclassifiable/Attainment.		Unclassifiable/Attainment.
Poughkeepsie, NY:				

New York—$PM_{2.5}$ [24-hour NAAQS]

Designated area	Designation for the 1997 NAAQS [a]		Designation for the 2006 NAAQS [a]	
	Date [1]	Type	Date [2]	Type
Dutchess County		Unclassifiable/Attainment.		Unclassifiable/Attainment.
Putnam County		Unclassifiable/Attainment.		Unclassifiable/Attainment.
Rochester, NY:				
Genesee County		Unclassifiable/Attainment.		Unclassifiable/Attainment.
Livingston County		Unclassifiable/Attainment.		Unclassifiable/Attainment.
Monroe County		Unclassifiable/Attainment.		Unclassifiable/Attainment.
Ontario County		Unclassifiable/Attainment.		Unclassifiable/Attainment.
Orleans County		Unclassifiable/Attainment.		Unclassifiable/Attainment.
Wayne County		Unclassifiable/Attainment.		Unclassifiable/Attainment.
Syracuse, NY:				
Cayuga County		Unclassifiable/Attainment.		Unclassifiable/Attainment.
Madison County		Unclassifiable/Attainment.		Unclassifiable/Attainment.
Onondaga County		Unclassifiable/Attainment.		Unclassifiable/Attainment.
Oswego County		Unclassifiable/Attainment.		Unclassifiable/Attainment.

[a] Includes Indian Country located in each county or area, except as otherwise specified.
[1] This date is 90 days after January 5, 2005, unless otherwise noted.
[2] This date is 30 days after November 13, 2009, unless otherwise noted.

New York—2008 Lead NAAQS

Designation area	Designation for the 2008 NAAQS [a]	
	Date [1]	Type
Orange County, NY:		
Orange County		Unclassifiable.
Rest of State		Unclassifiable/Attainment.

[a] Includes Indian Country located in each county or area, except as otherwise specified.
[1] December 31, 2011 unless otherwise noted.

[44 FR 5125, Jan. 25, 1979]

EDITORIAL NOTE: For FEDERAL REGISTER citations affecting §81.333, see the List of CFR Sections Affected, which appears in the Finding Aids section of the printed volume and at *www.fdsys.gov*.

EFFECTIVE DATE NOTE: At 77 FR 30136, May 21, 2012, §81.333 ws amended by revising the table heading for ''New York—Ozone (8-Hour Standard)'' to read ''New York—1997 8-Hour Ozone NAAQS (Primary and Secondary)''; by adding a new table entitled ''New York—2008 8-Hour Ozone NAAQS (Primary and Secondary)'' following the newly designated table ''New York—1997 8-Hour Ozone NAAQS (Primary and Secondary)'', effective July 20, 2012. For the convenience of the user, the added text is set forth as follows:

§81.333 New York.

* * * * *

New York—2008 8-Hour Ozone NAAQS (Primary and secondary)

Designated area	Designation		Classification	
	Date [1]	Type	Date [1]	Type
Jamestown, NY: [2] Chautauqua County		NonAttainment	Marginal.	
New York-N. New Jersey-Long Island, NY-NJ-CT: [2] Bronx County Kings County		Nonattainment		Marginal.

New York—2008 8-Hour Ozone NAAQS (Primary and secondary)

Designated area	Designation		Classification	
	Date [1]	Type	Date [1]	Type
Nassau County				
New York County				
Queens County				
Richmond County				
Rockland County				
Suffolk County				
Westchester County				
Shinnecock Indian Nation [3]				
Albany-Schenectady-Troy Area, NY: [4]		Unclassifiable/Attainment		
Albany County				
Rensselaer County				
Saratoga County				
Schenectady County				
Schoharie County				
Buffalo-Niagara Falls Area, NY: [4]		Unclassifiable/Attainment		
Erie County				
Niagara County				
Jefferson County Area, NY: [4]		Unclassifiable/Attainment		
Jefferson County				
Kingston Area, NY: [4]		Unclassifiable/Attainment		
Ulster County				
Poughkeepsie Area, NY: [4]		Unclassifiable/Attainment		
Dutchess County				
Orange County				
Putnam County				
Rochester Area, NY: [4]		Unclassifiable/Attainment		
Livingston County				
Monroe County				
Ontario County				
Orleans County				
Wayne County				
Syracuse, NY: [4]		Unclassifiable/Attainment		
Madison County				
Onondaga County				
Oswego County				
Whiteface Mountain: [4]		Unclassifiable/Attainment		
Essex County (part)				
The portion of Whiteface Mountain above 4500 feet in elevation in Essex County				
Rest of State and Rest of Indian Country		Unclassifiable/Attainment		

[1] This date is July 20, 2012, unless otherwise noted.
[2] Excludes Indian country located in each area, unless otherwise noted.
[3] Includes Indian country of the tribe listed in this table located in the identified area. Information pertaining to areas of Indian country in this table is intended for CAA planning purposes only and is not an EPA determination of Indian country status or any Indian country boundary. EPA lacks the authority to establish Indian country land status, and is making no determination of Indian country boundaries, in this table.
[4] Includes any Indian country in each county or area, unless otherwise specified.

* * * * *

§ 81.334 North Carolina.

North Carolina—TSP

Designated area	Does not meet primary standards	Does not meet secondary standards	Cannot be classified	Better than national standards
Alamance County				X
Alexander County				X
Alleghany County				X
Anson County				X
Ashe County				X
Avery County				X
Beaufort County				X
Bertie County				X
Bladen County				X
Brunswick County				X
Buncombe County				X

North Carolina—TSP

Designated area	Does not meet primary standards	Does not meet secondary standards	Cannot be classified	Better than national standards
Burke County				X
Cabarrus County				X
Caldwell County				X
Camden County				X
Carteret County				X
Caswell County				X
Catawba County				X
Chatham County				X
Cherokee County				X
Chowan County				X
Clay County				X
Cleveland County				X
Columbus County				X
Craven County				X
Cumberland County				X
Currituck County				X
Dare County				X
Davidson County				X
Davie County				X
Duplin County				X
Durham County				X
Edgecombe County				X
Forsyth County				X
Franklin County				X
Gaston County				X
Gates County				X
Graham County				X
Granville County				X
Greene County				X
Guilford County				X
Halifax County				X
Harnett County				X
Haywood County				X
Henderson County				X
Hertford County				X
Hoke County				X
Hyde County				X
Iredell County				X
Jackson County				X
Johnston County				X
Jones County				X
Lee County				X
Lenoir County				X
Lincoln County				X
McDowell County				X
Macon County				X
Madison County				X
Martin County				X
Mecklenburg County				X
Mitchell County				X
Montgomery County				X
Moore County				X
Nash County				X
New Hanover County				X
Northampton County				X
Onslow County				X
Orange County				X
Pamlico County				X
Pasquotank County				X
Pender County				X
Perquimans County				X
Person County				X
Pitt County				X
Polk County				X
Randolph County				X
Richmond County				X
Robeson County				X
Rockingham County				X
Rowan County				X
Rutherford County				X

North Carolina—TSP

Designated area	Does not meet primary standards	Does not meet secondary standards	Cannot be classified	Better than national standards
Sampson County				X
Scotland County				X
Stanly County				X
Stokes County				X
Surry County				X
Swain County				X
Transylvania County				X
Tyrrell County				X
Union County				X
Vance County				X
Wake County				X
Warren County				X
Washington County				X
Watauga County				X
Wayne County				X
Wilkes County				X
Wilson County				X
Yadkin County				X
Yancey County				X

North Carolina—SO_2

Designated area	Does not meet primary standards	Does not meet secondary standards	Cannot be classified	Better than national standards
Alamance County				X
Alexander County				X
Alleghany County				X
Anson County				X
Ashe County				X
Avery County				X
Beaufort County				X
Bertie County				X
Bladen County				X
Brunswick County				X
Buncombe County				X
Burke County				X
Cabarrus County				X
Caldwell County				X
Camden County				X
Carteret County				X
Caswell County				X
Catawba County				X
Chatham County				X
Cherokee County				X
Chowan County				X
Clay County				X
Cleveland County				X
Columbus County				X
Craven County				X
Cumberland County				X
Currituck County				X
Dare County				X
Davidson County				X
Davie County				X
Duplin County				X
Durham County				X
Edgecombe County				X
Forsyth County				X
Franklin County				X
Gaston County				X
Gates County				X
Graham County				X
Granville County				X
Greene County				X
Guilford County				X
Halifax County				X
Harnett County				X

North Carolina—SO_2

Designated area	Does not meet primary standards	Does not meet secondary standards	Cannot be classified	Better than national standards
Haywood County				X
Henderson County				X
Hertford County				X
Hoke County				X
Hyde County				X
Iredell County				X
Jackson County				X
Johnston County				X
Jones County				X
Lee County				X
Lenoir County				X
Lincoln County				X
McDowell County				X
Macon County				X
Madison County				X
Martin County				X
Mecklenburg County				X
Mitchell County				X
Montgomery County				X
Moore County				X
Nash County				X
New Hanover County				X
Northampton County				X
Onslow County				X
Orange County				X
Pamlico County				X
Pasquotank County				X
Pender County				X
Perquimans County				X
Person County				X
Pitt County				X
Polk County				X
Randolph County				X
Richmond County				X
Robeson County				X
Rockingham County				X
Rowan County				X
Rutherford County				X
Sampson County				X
Scotland County				X
Stanly County				X
Stokes County				X
Surry County				X
Swain County				X
Transylvania County				X
Tyrrell County				X
Union County				X
Vance County				X
Wake County				X
Warren County				X
Washington County				X
Watauga County				X
Wayne County				X
Wilkes County				X
Wilson County				X
Yadkin County				X
Yancey County				X

North Carolina—Carbon Monoxide

Designated Area	Designation		Classification	
	Date [1]	Type	Date [1]	Type
Winston-Salem Area				
Forsyth County	11/7/94			
Statewide		Unclassifiable/Attainment		
Alamance County				
Alexander County				
Alleghany County				

North Carolina—Carbon Monoxide

Designated Area	Designation		Classification	
	Date [1]	Type	Date [1]	Type
Anson County				
Ashe County				
Avery County				
Beaufort County				
Bertie County				
Bladen County				
Brunswick County				
Buncombe County				
Burke County				
Cabarrus County				
Caldwell County				
Camden County				
Carteret County				
Caswell County				
Catawba County				
Chatham County				
Cherokee County				
Chowan County				
Clay County				
Cleveland County				
Columbus County				
Craven County				
Cumberland County				
Currituck County				
Dare County				
Davidson County				
Davie County				
Duplin County				
Durham County	9/18/95			
Edgecombe County				
Franklin County				
Gaston County				
Gates County				
Graham County				
Granville County				
Greene County				
Guilford County				
Halifax County				
Harnett County				
Haywood County				
Henderson County				
Hertford County				
Hoke County				
Hyde County				
Iredell County				
Jackson County				
Johnston County				
Jones County				
Lee County				
Lenoir County				
Lincoln County				
Macon County				
Madison County				
Martin County				
McDowell County				
Mecklenburg County	9/18/95			
Mitchell County				
Montgomery County				
Moore County				
Nash County				
New Hanover County				
Northampton County				
Onslow County				
Orange County				
Pamlico County				
Pasquotank County				
Pender County				
Perquimans County				
Person County				
Pitt County				
Polk County				

North Carolina—Carbon Monoxide

Designated Area	Designation		Classification	
	Date [1]	Type	Date [1]	Type
Randolph County				
Richmond County				
Robeson County				
Rockingham County				
Rowan County				
Rutherford County				
Sampson County				
Scotland County				
Stanly County				
Stokes County				
Surry County				
Swain County				
Transylvania County				
Tyrrell County				
Union County				
Vance County				
Wake County	9/18/95			
Warren County				
Washington County				
Watauga County				
Wayne County				
Wilkes County				
Wilson County				
Yadkin County				
Yancey County				

[1] This date is November 15, 1990, unless otherwise noted.

North Carolina—Ozone (1-Hour Standard)[2]

Designated area	Designation		Classification	
	Date [1]	Type	Date [1]	Type
Statewide		Unclassifiable/Attainment		
Alamance County				
Alexander County				
Alleghany County				
Anson County				
Ashe County				
Avery County				
Beaufort County				
Bertie County				
Bladen County				
Brunswick County				
Buncombe County				
Burke County				
Cabarrus County				
Caldwell County				
Camden County				
Carteret County				
Caswell County				
Catawba County				
Chatham County				
Cherokee County				
Chowan County				
Clay County				
Cleveland County				
Columbus County				
Craven County				
Cumberland County				
Currituck County				
Dare County				
Davidson County				
Davie County				
Durham County				
Duplin County				
Edgecombe County				
Forsyth County				
Franklin County				
Gaston County				
Gates County				

North Carolina—Ozone (1-Hour Standard)[2]

Designated area	Designation		Classification	
	Date [1]	Type	Date [1]	Type
Graham County				
Granville County				
Greene County				
Guilford County				
Halifax County				
Harnett County				
Haywood County				
Henderson County				
Hertford County				
Hoke County				
Hyde County				
Iredell County				
Jackson County				
Johnston County				
Jones County				
Lee County				
Lenoir County				
Lincoln County				
McDowell County				
Macon County				
Madison County				
Martin County				
Mecklenburg County				
Mitchell County				
Montgomery County				
Moore County				
Nash County				
New Hanover County				
Northhampton County				
Onslow County				
Orange County				
Pamlico County				
Pasquotank County				
Pender County				
Perquimans County				
Person County				
Pitt County				
Polk County				
Randolph County				
Richmond County				
Robeson County				
Rockingham County				
Rowan County				
Rutherford County				
Sampson County				
Scotland County				
Stanly County				
Stokes County				
Surry County				
Swain County				
Transylvania County				
Tyrrell County				
Union County				
Vance County				
Wake County				
Warren County				
Washington County				
Watauga County				
Wayne County				
Wilkes County				
Wilson County				
Yadkin County				
Yancey County				

[1] This date is October 18, 2000, unless otherwise noted.

[2] The 1-hour ozone standard is revoked effective June 15, 2005 for all areas in North Carolina except the Cumberland Co. (Fayetteville), Triad (Greensboro-Winston-Salem-High Point), and Unifour (Hickory-Morgantown-Lenoir areas where it is revoked effective April 15, 2009.

North Carolina—NO_2 (1971 Annual Standard)

Designated areas	Does not meet primary standards	Cannot be classified or better than national standards
Alamance County		X
Alexander County		X
Alleghany County		X
Anson County		X
Ashe County		X
Avery County		X
Beaufort County		X
Bertie County		X
Bladen County		X
Brunswick County		X
Buncombe County		X
Burke County		X
Cabarrus County		X
Caldwell County		X
Camden County		X
Carteret County		X
Caswell County		X
Catawba County		X
Chatham County		X
Cherokee County		X
Chowan County		X
Clay County		X
Cleveland County		X
Columbus County		X
Craven County		X
Cumberland County		X
Currituck County		X
Dare County		X
Davidson County		X
Davie County		X
Duplin County		X
Durham County		X
Edgecombe County		X
Forsyth County		X
Franklin County		X
Gaston County		X
Gates County		X
Graham County		X
Granville County		X
Greene County		X
Guilford County		X
Halifax County		X
Harnett County		X
Haywood County		X
Henderson County		X
Hertford County		X
Hoke County		X
Hyde County		X
Iredell County		X
Jackson County		X
Jones County		X
Lee County		X
Lenoir County		X
Lincoln County		X
McDowell County		X
Macon County		X
Madison County		X
Martin County		X
Mecklenburg County		X
Mitchell County		X
Montgomery County		X
Moore County		X
Nash County		X
New Hanover County		X
Northampton County		X
Onslow County		X
Orange County		X
Pamlico County		X
Pasquotank County		X
Pender County		X

North Carolina—NO_2 (1971 Annual Standard)

Designated areas	Does not meet primary standards	Cannot be classified or better than national standards
Perquimans County		X
Person County		X
Pitt County		X
Polk County		X
Randolph County		X
Richmond County		X
Robeson County		X
Rockingham County		X
Rowan County		X
Rutherford County		X
Sampson County		X
Scotland County		X
Stanly County		X
Stokes County		X
Surry County		X
Swain County		X
Transylvania County		X
Tyrrell County		X
Union County		X
Vance County		X
Wake County		X
Warren County		X
Washington County		X
Watauga County		X
Wayne County		X
Wilkes County		X
Wilson County		X

North Carolina—NO_2 (2010 1-Hour Standard)

Designated area	Designation [a]	
	Date [1]	Type
Buncombe County (part)		Unclassifiable/Attainment.
Asheville Township, Avery Creek Township, Limestone Township, Lower Hominy Township, Reems Creek Township, Swannanoa Township.		
Buncombe County (remainder of county)		Unclassifiable/Attainment.
Each Individual Township:		
Caswell County (part)		Unclassifiable/Attainment.
Dan River Township, Yanceyville Township.		
Caswell County (rest of county)		Unclassifiable/Attainment.
Each Individual Township.		
Forsyth County (part)		Unclassifiable/Attainment.
Abbotts Creek Township, Broadbay Township, Kernersville Township, Middle Fork Township, Old Town Township, South Fork Township, Winston Township.		
Forsyth County (rest of county)		Unclassifiable/Attainment.
Each Individual Township.		
Guilford County (part)		Unclassifiable/Attainment.
Bruce Township, Center Grove Township, Deep River Township, Fentress Township, Friendship Township, Gilmer Township, High Point Township, Jamestown Township, Jefferson Township, Monroe Township, Morehead Township, Sumner Township.		
Guilford County (rest of county)		Unclassifiable/Attainment.
Each Individual Township.		
Mecklenburg County (part)		Unclassifiable/Attainment.
Township 1 Charlotte, Township 2 Berryhill, Township 5 Providence, Township 7 Crab Orchard, Township 12 Paw Creek.		
Mecklenburg County (rest of county)		Unclassifiable/Attainment.
Each Individual Township.		
New Hanover County (part)		Unclassifiable/Attainment.
Harnett Township, Masonboro Township, Wilmington Township.		
New Hanover County (rest of county)		Unclassifiable/Attainment.
Each Individual Township.		
Wake County (part)		Unclassifiable/Attainment.
Cary Township, Meredith Township.		

North Carolina—NO_2 (2010 1-Hour Standard)

Designated area	Designation [a]	
	Date [1]	Type
Wake County (rest of county)	.....	Unclassifiable/Attainment.
Each Individual Township.		
Rest of State:		
Each Individual Township	.....	Unclassifiable/Attainment.

[a] Includes Indian Country located in each county or area, except as otherwise specified.
[1] This date is 90 days after October 31, 2011, unless otherwise noted.

North Carolina—Ozone (8-Hour Standard)

Designated area	Designation [a]		Category/classification	
	Date [1]	Type	Date [1]	Type
Charlotte-Gastonia-Rock Hill, NC–SC	This action is effective May 31, 2011	Nonattainment	June 15, 2004	[4] Subpart 2/Moderate.
Cabarrus County	This action is effective May 31, 2011	Nonattainment	June 15, 2004	[4] Subpart 2/Moderate.
Gaston County	This action is effective May 31, 2011	Nonattainment	June 15, 2004	[4] Subpart 2/Moderate.
Iredell County (part) Davidson Township, Coddle Creek Township.	This action is effective May 31, 2011	Nonattainment	June 15, 2004	[4] Subpart 2/Moderate.
Lincoln County	This action is effective May 31, 2011	Nonattainment	June 15, 2004	[4] Subpart 2/Moderate.
Mecklenburg County	This action is effective May 31, 2011	Nonattainment	June 15, 2004	[4] Subpart 2/Moderate.
Rowan County	This action is effective May 31, 2011	Nonattainment	June 15, 2004	[4] Subpart 2/Moderate.
Union County	This action is effective May 31, 2011	Nonattainment	June 15, 2004	[4] Subpart 2/Moderate.
Fayetteville, NC:				
Cumberland County	(2)	Attainment		
Greensboro-Winston-Salem-High Point, NC:				
Alamance County	(2)	Attainment		
Caswell County	(2)	Attainment		
Davidson County	(2)	Attainment		
Davie County	(2)	Attainment		
Forsyth County	(2)	Attainment		
Guilford County	(2)	Attainment		
Randolph County	(2)	Attainment		
Rockingham County	(2)	Attainment		
Haywood and Swain Cos. (Great Smoky NP), NC:				
Haywood County (part)	This action is effective 12/07/09	Attainment.		
Swain County (part)	This action is effective 12/07/09	Attainment.		
Hickory-Morganton-Lenoir, NC:				
Alexander County	(2)	Attainment.		
Burke County (part) Unifour Metropolitan Planning Organization Boundary.	(2)	Attainment.		
Caldwell County (part) Unifour Metropolitan Planning Organization Boundary.	(2)	Attainment.		
Catawba County	(2)	Attainment.		
Raleigh-Durham-Chapel Hill, NC:				
Chatham County (part) Baldwin Township, Center Township, New Hope Township, Williams Township.	This action is effective December 26, 2007	Attainment		

North Carolina—Ozone (8-Hour Standard)

Designated area	Designation [a]		Category/classification	
	Date [1]	Type	Date [1]	Type
Durham County	This action is effective December 26, 2007	Attainment		
Franklin County	This action is effective December 26, 2007	Attainment		
Granville County	This action is effective December 26, 2007	Attainment		
Johnston County	This action is effective December 26, 2007	Attainment		
Orange County	This action is effective December 26, 2007	Attainment		
Person County	This action is effective December 26, 2007	Attainment		
Wake County	This action is effective December 26, 2007	Attainment		
Rocky Mount, NC:				
Edgecombe County	January 5, 2007	Attainment	.....	
Nash County	January 5, 2007	Attainment	.....	
Rest of State:	.....	Unclassifiable/Attainment		
Alleghany County				
Anson County				
Ashe County				
Avery County				
Beaufort County				
Bertie County				
Bladen County				
Brunswick County				
Buncombe County				
Burke County (part) remainder				
Caldwell County (part) remainder				
Camden County				
Carteret County				
Chatham County (part) remainder				
Cherokee County				
Chowan County				
Clay County				
Cleveland County				
Columbus County				
Craven County				
Currituck County				
Dare County				
Duplin County				
Gates County				
Graham County				
Greene County				
Halifax County				
Harnett County				
Haywood County (part) remainder				
Henderson County				
Hertford County				
Hoke County				
Hyde County				
Iredell County (part) remainder				
Jackson County				
Jones County				
Lee County				

North Carolina—Ozone (8-Hour Standard)

Designated area	Designation [a]		Category/classification	
	Date [1]	Type	Date [1]	Type
Lenoir County				
Macon County				
Madison County				
Martin County				
McDowell County				
Mitchell County				
Montgomery County				
Moore County				
New Hanover County				
Northampton County				
Onslow County				
Pamlico County				
Pasquotank County				
Pender County				
Perquimans County				
Pitt County				
Polk County				
Richmond County				
Robeson County				
Rutherford County				
Sampson County				
Scotland County				
Stanly County				
Stokes County				
Surry County				
Swain County (part) remainder				
Transylvania County				
Tyrrell County				
Vance County				
Warren County				
Washington County				
Watauga County				
Wayne County				
Wilkes County				
Wilson County				
Yadkin County				
Yancey County				

[a] Includes Indian Country located in each county or area, except as otherwise specified.
[1] This date is June 15, 2004, unless otherwise noted.
[2] Effective April 15, 2008.
[3] November 22, 2004.
[4] Attainment date extended to June 15, 2011.

North Carolina—$PM_{2.5}$ (Annual NAAQS)

Designated area	Designation [a]	
	Date [1]	Type
Greensboro-Winston Salem-High Point, NC:		
Davidson County	This action is effective 11/18/11.	Attainment.
Guilford County	This action is effective 11/18/11.	Attainment.
Hickory-Morganton-Lenoir, NC:		
Catawba County	This action is effective 11/18/11.	Attainment.
Rest of State:		
Alamance County		Unclassifiable/Attainment.
Alexander County		Unclassifiable/Attainment.

North Carolina—$PM_{2.5}$ (Annual NAAQS)

Designated area	Designation [a]	
	Date [1]	Type
Alleghany County		Unclassifiable/Attainment.
Anson County		Unclassifiable/Attainment.
Ashe County		Unclassifiable/Attainment.
Avery County		Unclassifiable/Attainment.
Beaufort County		Unclassifiable/Attainment.
Bertie County		Unclassifiable/Attainment.
Bladen County		Unclassifiable/Attainment.
Brunswick County		Unclassifiable/Attainment.
Buncombe County		Unclassifiable/Attainment.
Burke County		Unclassifiable/Attainment.
Cabarrus County		Unclassifiable/Attainment.
Caldwell County		Unclassifiable/Attainment.
Camden County		Unclassifiable/Attainment.
Carteret County		Unclassifiable/Attainment.
Caswell County		Unclassifiable/Attainment.
Chatham County		Unclassifiable/Attainment.
Cherokee County		Unclassifiable/Attainment.
Chowan County		Unclassifiable/Attainment.
Clay County		Unclassifiable/Attainment.
Cleveland County		Unclassifiable/Attainment.
Columbus County		Unclassifiable/Attainment.
Craven County		Unclassifiable/Attainment.
Cumberland County		Unclassifiable/Attainment.
Currituck County		Unclassifiable/Attainment.
Dare County		Unclassifiable/Attainment.
Davie County		Unclassifiable/Attainment.
Duplin County		Unclassifiable/Attainment.
Durham County		Unclassifiable/Attainment.
Edgecombe County		Unclassifiable/Attainment.
Forsyth County		Unclassifiable/Attainment.
Franklin County		Unclassifiable/Attainment.
Gaston County		Unclassifiable/Attainment.
Gates County		Unclassifiable/Attainment.
Graham County		Unclassifiable/Attainment.
Granville County		Unclassifiable/Attainment.
Greene County		Unclassifiable/Attainment.
Halifax County		Unclassifiable/Attainment.
Harnett County		Unclassifiable/Attainment.
Haywood County		Unclassifiable/Attainment.
Henderson County		Unclassifiable/Attainment.
Hertford County		Unclassifiable/Attainment.
Hoke County		Unclassifiable/Attainment.
Hyde County		Unclassifiable/Attainment.
Iredell County		Unclassifiable/Attainment.
Jackson County		Unclassifiable/Attainment.
Johnston County		Unclassifiable/Attainment.
Jones County		Unclassifiable/Attainment.
Lee County		Unclassifiable/Attainment.
Lenoir County		Unclassifiable/Attainment.
Lincoln County		Unclassifiable/Attainment.
McDowell County		Unclassifiable/Attainment.
Macon County		Unclassifiable/Attainment.
Madison County		Unclassifiable/Attainment.
Martin County		Unclassifiable/Attainment.
Mecklenburg County		Unclassifiable/Attainment.
Mitchell County		Unclassifiable/Attainment.
Montgomery County		Unclassifiable/Attainment.
Moore County		Unclassifiable/Attainment.
Nash County		Unclassifiable/Attainment.
New Hanover County		Unclassifiable/Attainment.
Northampton County		Unclassifiable/Attainment.
Onslow County		Unclassifiable/Attainment.
Orange County		Unclassifiable/Attainment.
Pamlico County		Unclassifiable/Attainment.
Pasquotank County		Unclassifiable/Attainment.
Pender County		Unclassifiable/Attainment.
Perquimans County		Unclassifiable/Attainment.
Person County		Unclassifiable/Attainment.
Pitt County		Unclassifiable/Attainment.
Polk County		Unclassifiable/Attainment.
Randolph County		Unclassifiable/Attainment.

North Carolina—$PM_{2.5}$ (Annual NAAQS)

Designated area	Designation [a]	
	Date [1]	Type
Richmond County		Unclassifiable/Attainment.
Robeson County		Unclassifiable/Attainment.
Rockingham County		Unclassifiable/Attainment.
Rowan County		Unclassifiable/Attainment.
Rutherford County		Unclassifiable/Attainment.
Sampson County		Unclassifiable/Attainment.
Scotland County		Unclassifiable/Attainment.
Stanly County		Unclassifiable/Attainment.
Stokes County		Unclassifiable/Attainment.
Surry County		Unclassifiable/Attainment.
Swain County		Unclassifiable/Attainment.
Transylvania County		Unclassifiable/Attainment.
Tyrrell County		Unclassifiable/Attainment.
Union County		Unclassifiable/Attainment.
Vance County		Unclassifiable/Attainment.
Wake County		Unclassifiable/Attainment.
Warren County		Unclassifiable/Attainment.
Washington County		Unclassifiable/Attainment.
Watauga County		Unclassifiable/Attainment.
Wayne County		Unclassifiable/Attainment.
Wilkes County		Unclassifiable/Attainment.
Wilson County		Unclassifiable/Attainment.
Yadkin County		Unclassifiable/Attainment.
Yancey County		Unclassifiable/Attainment.

[a] Includes Indian Country located in each county or area, except as otherwise specified.
[1] This date is 90 days after January 5, 2005, unless otherwise noted.

North Carolina—$PM_{2.5}$ [24-hour NAAQS]

Designated area	Designation for the 1997 NAAQS [a]		Designation for the 2006 NAAQS [a]	
	Date [1]	Type	Date [2]	Type
Statewide:				
Alamance County		Unclassifiable/Attainment		Unclassifiable/Attainment.
Alexander County		Unclassifiable/Attainment		Unclassifiable/Attainment.
Alleghany County		Unclassifiable/Attainment		Unclassifiable/Attainment.
Anson County		Unclassifiable/Attainment		Unclassifiable/Attainment.
Ashe County		Unclassifiable/Attainment		Unclassifiable/Attainment.
Avery County		Unclassifiable/Attainment		Unclassifiable/Attainment.
Beaufort County		Unclassifiable/Attainment		Unclassifiable/Attainment.
Bertie County		Unclassifiable/Attainment		Unclassifiable/Attainment.
Bladen County		Unclassifiable/Attainment		Unclassifiable/Attainment.
Brunswick County		Unclassifiable/Attainment		Unclassifiable/Attainment.
Buncombe County		Unclassifiable/Attainment		Unclassifiable/Attainment.
Burke County		Unclassifiable/Attainment		Unclassifiable/Attainment.
Cabarrus County		Unclassifiable/Attainment		Unclassifiable/Attainment.
Caldwell County		Unclassifiable/Attainment		Unclassifiable/Attainment.
Camden County		Unclassifiable/Attainment		Unclassifiable/Attainment.
Carteret County		Unclassifiable/Attainment		Unclassifiable/Attainment.
Caswell County		Unclassifiable/Attainment		Unclassifiable/Attainment.
Catawba County		Unclassifiable/Attainment		Unclassifiable/Attainment.
Chatham County		Unclassifiable/Attainment		Unclassifiable/Attainment.

North Carolina—$PM_{2.5}$ [24-hour NAAQS]

Designated area	Designation for the 1997 NAAQS [a]		Designation for the 2006 NAAQS [a]	
	Date [1]	Type	Date [2]	Type
Cherokee County		Unclassifiable/Attainment		Unclassifiable/Attainment.
Chowan County		Unclassifiable/Attainment		Unclassifiable/Attainment.
Clay County		Unclassifiable/Attainment		Unclassifiable/Attainment.
Cleveland County		Unclassifiable/Attainment		Unclassifiable/Attainment.
Columbus County		Unclassifiable/Attainment		Unclassifiable/Attainment.
Craven County		Unclassifiable/Attainment		Unclassifiable/Attainment.
Cumberland County		Unclassifiable/Attainment		Unclassifiable/Attainment.
Currituck County		Unclassifiable/Attainment		Unclassifiable/Attainment.
Dare County		Unclassifiable/Attainment		Unclassifiable/Attainment.
Davidson County		Unclassifiable/Attainment		Unclassifiable/Attainment.
Davie County		Unclassifiable/Attainment		Unclassifiable/Attainment.
Duplin County		Unclassifiable/Attainment		Unclassifiable/Attainment.
Durham County		Unclassifiable/Attainment		Unclassifiable/Attainment.
Edgecombe County		Unclassifiable/Attainment		Unclassifiable/Attainment.
Forsyth County		Unclassifiable/Attainment		Unclassifiable/Attainment.
Franklin County		Unclassifiable/Attainment		Unclassifiable/Attainment.
Gaston County		Unclassifiable/Attainment		Unclassifiable/Attainment.
Gates County		Unclassifiable/Attainment		Unclassifiable/Attainment.
Graham County		Unclassifiable/Attainment		Unclassifiable/Attainment.
Granville County		Unclassifiable/Attainment		Unclassifiable/Attainment.
Greene County		Unclassifiable/Attainment		Unclassifiable/Attainment.
Guilford County		Unclassifiable/Attainment		Unclassifiable/Attainment.
Halifax County		Unclassifiable/Attainment		Unclassifiable/Attainment.
Harnett County		Unclassifiable/Attainment		Unclassifiable/Attainment.
Haywood County		Unclassifiable/Attainment		Unclassifiable/Attainment.
Henderson County		Unclassifiable/Attainment		Unclassifiable/Attainment.
Hertford County		Unclassifiable/Attainment		Unclassifiable/Attainment.
Hoke County		Unclassifiable/Attainment		Unclassifiable/Attainment.
Hyde County		Unclassifiable/Attainment		Unclassifiable/Attainment.
Iredell County		Unclassifiable/Attainment		Unclassifiable/Attainment.
Jackson County		Unclassifiable/Attainment		Unclassifiable/Attainment.
Johnston County		Unclassifiable/Attainment		Unclassifiable/Attainment.
Jones County		Unclassifiable/Attainment		Unclassifiable/Attainment.
Lee County		Unclassifiable/Attainment		Unclassifiable/Attainment.
Lenoir County		Unclassifiable/Attainment		Unclassifiable/Attainment.

North Carolina—$PM_{2.5}$ [24-hour NAAQS]

Designated area	Designation for the 1997 NAAQS [a]		Designation for the 2006 NAAQS [a]	
	Date [1]	Type	Date [2]	Type
Lincoln County		Unclassifiable/Attainment		Unclassifiable/Attainment.
McDowell County		Unclassifiable/Attainment		Unclassifiable/Attainment.
Macon County		Unclassifiable/Attainment		Unclassifiable/Attainment.
Madison County		Unclassifiable/Attainment		Unclassifiable/Attainment.
Martin County		Unclassifiable/Attainment		Unclassifiable/Attainment.
Mecklenburg County		Unclassifiable/Attainment		Unclassifiable/Attainment.
Mitchell County		Unclassifiable/Attainment		Unclassifiable/Attainment.
Montgomery County		Unclassifiable/Attainment		Unclassifiable/Attainment.
Moore County		Unclassifiable/Attainment		Unclassifiable/Attainment.
Nash County		Unclassifiable/Attainment		Unclassifiable/Attainment.
New Hanover County		Unclassifiable/Attainment		Unclassifiable/Attainment.
Northampton County		Unclassifiable/Attainment		Unclassifiable/Attainment.
Onslow County		Unclassifiable/Attainment		Unclassifiable/Attainment.
Orange County		Unclassifiable/Attainment		Unclassifiable/Attainment.
Pamlico County		Unclassifiable/Attainment		Unclassifiable/Attainment.
Pasquotank County		Unclassifiable/Attainment		Unclassifiable/Attainment.
Pender County		Unclassifiable/Attainment		Unclassifiable/Attainment.
Perquimans County		Unclassifiable/Attainment		Unclassifiable/Attainment.
Person County		Unclassifiable/Attainment		Unclassifiable/Attainment.
Pitt County		Unclassifiable/Attainment		Unclassifiable/Attainment.
Polk County		Unclassifiable/Attainment		Unclassifiable/Attainment.
Randolph County		Unclassifiable/Attainment		Unclassifiable/Attainment.
Richmond County		Unclassifiable/Attainment		Unclassifiable/Attainment.
Robeson County		Unclassifiable/Attainment		Unclassifiable/Attainment.
Rockingham County		Unclassifiable/Attainment		Unclassifiable/Attainment.
Rowan County		Unclassifiable/Attainment		Unclassifiable/Attainment.
Rutherford County		Unclassifiable/Attainment		Unclassifiable/Attainment.
Sampson County		Unclassifiable/Attainment		Unclassifiable/Attainment.
Scotland County		Unclassifiable/Attainment		Unclassifiable/Attainment.
Stanly County		Unclassifiable/Attainment		Unclassifiable/Attainment.
Stokes County		Unclassifiable/Attainment		Unclassifiable/Attainment.
Surry County		Unclassifiable/Attainment		Unclassifiable/Attainment.
Swain County		Unclassifiable/Attainment		Unclassifiable/Attainment.
Transylvania County		Unclassifiable/Attainment		Unclassifiable/Attainment.
Tyrrell County		Unclassifiable/Attainment		Unclassifiable/Attainment.

North Carolina—$PM_{2.5}$ [24-hour NAAQS]

Designated area	Designation for the 1997 NAAQS [a]		Designation for the 2006 NAAQS [a]	
	Date [1]	Type	Date [2]	Type
Union County		Unclassifiable/Attainment		Unclassifiable/Attainment.
Vance County		Unclassifiable/Attainment		Unclassifiable/Attainment.
Wake County		Unclassifiable/Attainment		Unclassifiable/Attainment.
Warren County		Unclassifiable/Attainment		Unclassifiable/Attainment.
Washington County		Unclassifiable/Attainment		Unclassifiable/Attainment.
Watauga County		Unclassifiable/Attainment		Unclassifiable/Attainment.
Wayne County		Unclassifiable/Attainment		Unclassifiable/Attainment.
Wilkes County		Unclassifiable/Attainment		Unclassifiable/Attainment.
Wilson County		Unclassifiable/Attainment		Unclassifiable/Attainment.
Yadkin County		Unclassifiable/Attainment		Unclassifiable/Attainment.
Yancey County		Unclassifiable/Attainment		Unclassifiable/Attainment.

[a] Includes Indian Country located in each county or area, except as otherwise specified.
[1] This date is 90 days after January 5, 2005, unless otherwise noted.
[2] This date is 30 days after November 13, 2009, unless otherwise noted.

North Carolina—2008 Lead NAAQS

Designated area	Designation for the 2008 NAAQS [a]	
	Date [1]	Type
Whole State		Unclassifiable/Attainment.

[a] Includes Indian Country located in each county or area, except as otherwise specified.
[1] December 31, 2011 unless otherwise noted.

[43 FR 8964, Mar. 3, 1978]

EDITORIAL NOTE: For FEDERAL REGISTER citations affecting § 81.334 see the List of CFR Sections Affected, which appears in the Finding Aids section of the printed volume and at *www.fdsys.gov*.

EFFECTIVE DATE NOTE: At 77 FR 30137, May 21, 2012, § 81.334 was amended by revising the table heading for ''North Carolina—Ozone (8-Hour Standard)'' to read ''North Carolina—1997 8-Hour Ozone NAAQS (Primary and Secondary)''; by adding a new table entitled ''North Carolina—2008 8-Hour Ozone NAAQS (Primary and Secondary)'' following the newly designated table ''North Carolina—1997 8-Hour Ozone NAAQS (Primary and Secondary)'', effective July 20, 2012. For the convenience of the user, the added text is set forth as follows:

§ 81.334 North Carolina.

* * * * *

North Carolina—2008 8-Hour Ozone NAAQS (Primary and secondary)

Designated area	Designation		Classification	
	Date [1]	Type	Date [1]	Type
Charlotte-Rock Hill, NC-SC: [2]		Nonattainment		Marginal.
Cabarrus County (part)				
Central Cabarrus Township, Georgeville Township, Harrisburg Township, Kannapolis Township, Midland Township, Mount Pleasant Township, New Gilead Township, Odell Township, Poplar Tent Township, Rimertown Township				
Gaston County (part)				

North Carolina—2008 8-Hour Ozone NAAQS (Primary and secondary)

Designated area	Designation		Classification	
	Date [1]	Type	Date [1]	Type
Crowders Mountain Township, Dallas Township, Gastonia Township, Riverbend Township, South Point Township				
Iredell County (part)				
Davidson Township, Coddle Creek Township				
Lincoln County (part)				
Catawba Springs Township, Ironton Township, Lincolnton Township				
Mecklenburg County				
Rowan County (part)				
Atwell Township, China Grove Township, Franklin Township, Litaker Township, Locke Township, Providence Township, Salisbury Township, Steele Township, Unity Township				
Union County (part) Goose Creek Township, Marshville Township, Monroe Township, Sandy Ridge Township, Vance Township				
Rest of State: [3]				
Alamance County	.....	Unclassifiable/Attainment		
Alexander County	.....	Unclassifiable/Attainment		
Alleghany County	.....	Unclassifiable/Attainment		
Anson County	.....	Unclassifiable/Attainment		
Ashe County	.....	Unclassifiable/Attainment		
Avery County	.....	Unclassifiable/Attainment		
Beaufort County	.....	Unclassifiable/Attainment		
Bertie County	.....	Unclassifiable/Attainment		
Bladen County	.....	Unclassifiable/Attainment		
Brunswick County	.....	Unclassifiable/Attainment		
Buncombe County	.....	Unclassifiable/Attainment		
Burke County	.....	Unclassifiable/Attainment		
Cabarrus County (part)				
Gold Hill Township	.....	Unclassifiable/Attainment		
Caldwell County	.....	Unclassifiable/Attainment		
Camden County	.....	Unclassifiable/Attainment		
Carteret County	.....	Unclassifiable/Attainment		
Caswell County	.....	Unclassifiable/Attainment		
Catawba County	.....	Unclassifiable/Attainment		
Chatham County	.....	Unclassifiable/Attainment		
Cherokee County	.....	Unclassifiable/Attainment		
Chowan County	.....	Unclassifiable/Attainment		
Clay County	.....	Unclassifiable/Attainment		
Cleveland County	.....	Unclassifiable/Attainment		
Columbus County	.....	Unclassifiable/Attainment		
Craven County	.....	Unclassifiable/Attainment		
Cumberland County	.....	Unclassifiable/Attainment		
Currituck County	.....	Unclassifiable/Attainment		
Dare County	.....	Unclassifiable/Attainment		
Davidson County	.....	Unclassifiable/Attainment		
Davie County	.....	Unclassifiable/Attainment		
Duplin County	.....	Unclassifiable/Attainment		
Durham County	.....	Unclassifiable/Attainment		
Edgecombe County	.....	Unclassifiable/Attainment		
Forsyth County	.....	Unclassifiable/Attainment		
Franklin County	.....	Unclassifiable/Attainment		
Gaston County (part)				
Cherryville.				
Township	.....	Unclassifiable/Attainment		
Gates County	.....	Unclassifiable/Attainment		
Graham County	.....	Unclassifiable/Attainment		
Granville County	.....	Unclassifiable/Attainment		
Greene County	.....	Unclassifiable/Attainment		
Guilford County	.....	Unclassifiable/Attainment		
Halifax County	.....	Unclassifiable/Attainment		
Harnett County	.....	Unclassifiable/Attainment		
Haywood County	.....	Unclassifiable/Attainment		

North Carolina—2008 8-Hour Ozone NAAQS (Primary and secondary)

Designated area	Designation		Classification	
	Date [1]	Type	Date [1]	Type
Henderson County		Unclassifiable/Attainment		
Hertford County		Unclassifiable/Attainment		
Hoke County		Unclassifiable/Attainment		
Hyde County		Unclassifiable/Attainment		
Iredell County (part)				
Barringer Township		Unclassifiable/Attainment		
Bethany Township		Unclassifiable/Attainment		
Chambersburg Township		Unclassifiable/Attainment		
Concord Township		Unclassifiable/Attainment		
Cool Springs Township		Unclassifiable/Attainment		
Eagle Mills Township		Unclassifiable/Attainment		
Fallstown Township		Unclassifiable/Attainment		
New Hope Township		Unclassifiable/Attainment		
Olin Township		Unclassifiable/Attainment		
Sharpesburg Township		Unclassifiable/Attainment		
Shiloh Township		Unclassifiable/Attainment		
Statesville Township		Unclassifiable/Attainment		
Turnersburg Township		Unclassifiable/Attainment		
Union Grove Township		Unclassifiable/Attainment		
Jackson County		Unclassifiable/Attainment		
Johnston County		Unclassifiable/Attainment		
Jones County		Unclassifiable/Attainment		
Lee County		Unclassifiable/Attainment		
Lenoir County		Unclassifiable/Attainment		
Lincoln County (part)				
Howard's Creek Township		Unclassifiable/Attainment		
North Brook Township		Unclassifiable/Attainment		
Macon County		Unclassifiable/Attainment		
Madison County		Unclassifiable/Attainment		
Martin County		Unclassifiable/Attainment		
McDowell County		Unclassifiable/Attainment		
Mitchell County		Unclassifiable/Attainment		
Montgomery County		Unclassifiable/Attainment		
Moore County		Unclassifiable/Attainment		
Nash County		Unclassifiable/Attainment		
New Hanover County		Unclassifiable/Attainment		
Northampton County		Unclassifiable/Attainment		
Onslow County		Unclassifiable/Attainment		
Orange County		Unclassifiable/Attainment		
Pamlico County		Unclassifiable/Attainment		
Pasquotank County		Unclassifiable/Attainment		
Pender County		Unclassifiable/Attainment		
Perquimans County		Unclassifiable/Attainment		
Person County		Unclassifiable/Attainment		
Pitt County		Unclassifiable/Attainment		
Polk County		Unclassifiable/Attainment		
Randolph County		Unclassifiable/Attainment		
Richmond County		Unclassifiable/Attainment		
Robeson County		Unclassifiable/Attainment		
Rockingham County		Unclassifiable/Attainment		
Rowan County (part)				
Cleveland Township		Unclassifiable/Attainment		
Morgan Township		Unclassifiable/Attainment		
Mount Ulla Township		Unclassifiable/Attainment		
Scotch Irish Township		Unclassifiable/Attainment		
Rutherford County		Unclassifiable/Attainment		
Sampson County		Unclassifiable/Attainment		
Scotland County		Unclassifiable/Attainment		
Stanly County		Unclassifiable/Attainment		
Stokes County		Unclassifiable/Attainment		
Surry County		Unclassifiable/Attainment		
Swain County		Unclassifiable/Attainment		
Transylvania County		Unclassifiable/Attainment		
Tyrrell County		Unclassifiable/Attainment		
Union County (part).				
Buford Township		Unclassifiable/Attainment		
Jackson Township		Unclassifiable/Attainment		
Lanes Creek Township		Unclassifiable/Attainment		
New Salem Township		Unclassifiable/Attainment		
Vance County		Unclassifiable/Attainment		
Wake County		Unclassifiable/Attainment		

North Carolina—2008 8-Hour Ozone NAAQS (Primary and secondary)

Designated area	Designation		Classification	
	Date [1]	Type	Date [1]	Type
Warren County		Unclassifiable/Attainment		
Washington County		Unclassifiable/Attainment		
Watauga County		Unclassifiable/Attainment		
Wayne County		Unclassifiable/Attainment		
Wilkes County		Unclassifiable/Attainment		
Wilson County		Unclassifiable/Attainment		
Yadkin County		Unclassifiable/Attainment		
Yancey County		Unclassifiable/Attainment		

[1] This date is July 20, 2012, unless otherwise noted.
[2] Excludes Indian country located in each area, unless otherwise noted.
[3] Includes any Indian country in each county or area, unless otherwise specified.

* * * * *

§ 81.335 North Dakota.

North Dakota—SO_2

Designated area	Does not meet primary standards	Does not meet secondary standards	Cannot be classified	Better than national standards
Metropolitan Fargo-Moorhead (Minn), AQCR 130				X
Rest of State, AQCR 172				X

North Dakota—Carbon Monoxide

Designated Area	Designation		Classification	
	Date [1]	Type	Date [1]	Type
AQCR 130 Metropolitan Fargo-Moorhead Intrastate				
Cass County		Unclassifiable/Attainment		
Rest of State		Unclassifiable/Attainment		
Adams County				
Barnes County				
Benson County				
Billings County				
Bottineau County				
Bowman County				
Burke County				
Burleigh County				
Cavalier County				
Dickey County				
Divide County				
Dunn County				
Eddy County				
Emmons County				
Foster County				
Golden Valley County				
Grand Forks County				
Grant County				
Griggs County				
Hettinger County				
Kidder County				
La Moure County				
Logan County				
McHenry County				
McIntosh County				
McKenzie County				
McLean County				
Mercer County				
Morton County				
Mountrail County				
Nelson County				
Oliver County				
Pembina County				
Pierce County				
Ramsey County				
Ransom County				

North Dakota—Carbon Monoxide

Designated Area	Designation		Classification	
	Date [1]	Type	Date [1]	Type
Renville County				
Richland County				
Rolette County				
Sargent County				
Sheridan County				
Sioux County				
Slope County				
Stark County				
Steele County				
Stutsman County				
Towner County				
Traill County				
Walsh County				
Ward County				
Wells County				
Williams County				

[1] This date is November 15, 1990, unless otherwise noted.

North Dakota—Ozone (1-Hour Standard)[2]

Designated area	Designation		Classification	
	Date [1]	Type	Date [1]	Type
AQCR 130 Metropolitan Fargo-Moorhead Interstate.				
Cass County	.....	Unclassifiable/Attainment		
Rest of State, AQCR 172	.....	Unclassifiable/Attainment		
Adams County				
Barnes County				
Benson County				
Billings County				
Bottineau County				
Bowman County				
Burke County				
Burleigh County				
Cavalier County				
Dickey County				
Divide County				
Dunn County				
Eddy County				
Emmons County				
Foster County				
Golden Valley County				
Grand Forks County				
Grant County				
Griggs County				
Hettinger County				
Kidder County				
La Moure County				
Logan County				
McHenry County				
McIntosh County				
McKenzie County				
McLean County				
Mercer County				
Morton County				
Mountrail County				
Nelson County				
Oliver County				
Pembina County				
Pierce County				
Ramsey County				
Ransom County				
Renville County				
Richland County				
Rolette County				
Sargent County				
Sheridan County				
Sioux County				
Slope County				
Stark County				

North Dakota—Ozone (1-Hour Standard)[2]

Designated area	Designation		Classification	
	Date [1]	Type	Date [1]	Type
Steele County				
Stutsman County				
Towner County				
Traill County				
Walsh County				
Ward County				
Wells County				
Williams County				

[1] This date is October 18, 2000, unless otherwise noted.
[2] The 1-hour ozone standard is revoked effective June 15, 2005 for all areas in North Dakota.

North Dakota—PM–10

Designated Area	Designation		Classification	
	Date	Type	Date	Type
Metropolitan Fargo-Moorhead (Minn.), AQCR 130	11/15/90	Unclassifiable	.....	
Rest of State, AQCR 172 [1]	11/15/90	Unclassifiable	.....	

[1] Denotes a single area designation for PSD baseline area purposes.

North Dakota—NO_2 (1971 Annual Standard)

Designated area	Does not meet primary standards	Cannot be classified or better than national standards
Metropolitan Fargo-Moorhead (Minn), AQCR 130	.....	X
Rest of State, AQCR 172	.....	X

North Dakota—NO_2 (2010 1-Hour Standard)

Designated area	Designation [a]	
	Date [1]	Type
State of North Dakota	.....	Unclassifiable/Attainment.

[a] Includes Indian Country located in each county or area, except as otherwise specified.
[1] This date is 90 days after October 31, 2011, unless otherwise noted.

North Dakota—Ozone (8-Hour Standard)

Designated area	Designation [a]		Category/classification	
	Date [1]	Type	Date [1]	Type
AQCR 130 Metropolitan Fargo-Moorhead Interstate:				
Cass County	.....	Unclassifiable/Attainment		
Rest of State, AQCR 172	.....	Unclassifiable/Attainment		
Adams County				
Barnes County				
Benson County				
Billings County				
Bottineau County				
Bowman County				
Burke County				
Burleigh County				
Cavalier County				
Dickey County				
Divide County				
Dunn County				
Eddy County				
Emmons County				
Foster County				
Golden Valley County				
Grand Forks County				
Grant County				
Griggs County				
Hettinger County				
Kidder County				
LaMoure County				

North Dakota—Ozone (8-Hour Standard)

Designated area	Designation [a]		Category/classification	
	Date [1]	Type	Date [1]	Type
Logan County				
McHenry County				
McIntosh County				
McKenzie County				
McLean County				
Mercer County				
Morton County				
Mountrail County				
Nelson County				
Oliver County				
Pembina County				
Pierce County				
Ramsey County				
Ransom County				
Renville County				
Richland County				
Rolette County				
Sargent County				
Sheridan County				
Sioux County				
Slope County				
Stark County				
Steele County				
Stutsman County				
Towner County				
Traill County				
Walsh County				
Ward County				
Wells County				
Williams County				

[a] Includes Indian Country located in each county or area, except as otherwise specified.
[1] This date is June 15, 2004, unless otherwise noted.

North Dakota—$PM_{2.5}$ (Annual NAAQS)

Designated area	Designation [a]	
	Date [1]	Type
AQCR 130 Metropolitan Fargo-Moorhead Interstate:		
Cass County		Unclassifiable/Attainment.
Rest of State, AQCR 172:		
Adams County		Unclassifiable/Attainment.
Barnes County		Unclassifiable/Attainment.
Benson County		Unclassifiable/Attainment.
Billings County		Unclassifiable/Attainment.
Bottineau County		Unclassifiable/Attainment.
Bowman County		Unclassifiable/Attainment.
Burke County		Unclassifiable/Attainment.
Burleigh County		Unclassifiable/Attainment.
Cavalier County		Unclassifiable/Attainment.
Dickey County		Unclassifiable/Attainment.
Divide County		Unclassifiable/Attainment.
Dunn County		Unclassifiable/Attainment.
Eddy County		Unclassifiable/Attainment.
Emmons County		Unclassifiable/Attainment.
Foster County		Unclassifiable/Attainment.
Golden Valley County		Unclassifiable/Attainment.
Grand Forks County		Unclassifiable/Attainment.
Grant County		Unclassifiable/Attainment.
Griggs County		Unclassifiable/Attainment.
Hettinger County		Unclassifiable/Attainment.
Kidder County		Unclassifiable/Attainment.
LaMoure County		Unclassifiable/Attainment.
Logan County		Unclassifiable/Attainment.
McHenry County		Unclassifiable/Attainment.
McIntosh County		Unclassifiable/Attainment.
McKenzie County		Unclassifiable/Attainment.
McLean County		Unclassifiable/Attainment.
Mercer County		Unclassifiable/Attainment.
Morton County		Unclassifiable/Attainment.

North Dakota—$PM_{2.5}$ (Annual NAAQS)

Designated area	Designation [a]	
	Date [1]	Type
Mountrail County		Unclassifiable/Attainment.
Nelson County		Unclassifiable/Attainment.
Oliver County		Unclassifiable/Attainment.
Pembina County		Unclassifiable/Attainment.
Pierce County		Unclassifiable/Attainment.
Ramsey County		Unclassifiable/Attainment.
Ransom County		Unclassifiable/Attainment.
Renville County		Unclassifiable/Attainment.
Richland County		Unclassifiable/Attainment.
Rolette County		Unclassifiable/Attainment.
Sargent County		Unclassifiable/Attainment.
Sheridan County		Unclassifiable/Attainment.
Sioux County		Unclassifiable/Attainment.
Slope County		Unclassifiable/Attainment.
Stark County		Unclassifiable/Attainment.
Steele County		Unclassifiable/Attainment.
Stutsman County		Unclassifiable/Attainment.
Towner County		Unclassifiable/Attainment.
Traill County		Unclassifiable/Attainment.
Walsh County		Unclassifiable/Attainment.
Ward County		Unclassifiable/Attainment.
Wells County		Unclassifiable/Attainment.
Williams County		Unclassifiable/Attainment.

[a] Includes Indian Country located in each county or area, except as otherwise specified.
[1] This date is 90 days after January 5, 2005, unless otherwise noted.

North Dakota—$PM_{2.5}$ [24-hour NAAQS]

Designated area	Designation for the 1997 NAAQS [a]		Designation for the 2006 NAAQS [a]	
	Date [1]	Type	Date [2]	Type
AQCR 130 Metropolitan Fargo-Moorhead Interstate:				
Cass County		Unclassifiable/Attainment		Unclassifiable/Attainment.
Rest of State, AQCR 172:				
Adams County		Unclassifiable/Attainment		Unclassifiable/Attainment.
Barnes County		Unclassifiable/Attainment		Unclassifiable/Attainment.
Benson County		Unclassifiable/Attainment		Unclassifiable/Attainment.
Billings County		Unclassifiable/Attainment		Unclassifiable/Attainment.
Bottineau County		Unclassifiable/Attainment		Unclassifiable/Attainment.
Bowman County		Unclassifiable/Attainment		Unclassifiable/Attainment.
Burke County		Unclassifiable/Attainment		Unclassifiable/Attainment.
Burleigh County		Unclassifiable/Attainment		Unclassifiable/Attainment.
Cavalier County		Unclassifiable/Attainment		Unclassifiable/Attainment.
Dickey County		Unclassifiable/Attainment		Unclassifiable/Attainment.
Divide County		Unclassifiable/Attainment		Unclassifiable/Attainment.
Dunn County		Unclassifiable/Attainment		Unclassifiable/Attainment.
Eddy County		Unclassifiable/Attainment		Unclassifiable/Attainment.
Emmons County		Unclassifiable/Attainment		Unclassifiable/Attainment.
Foster County		Unclassifiable/Attainment		Unclassifiable/Attainment.
Golden Valley County		Unclassifiable/Attainment		Unclassifiable/Attainment.
Grand Forks County		Unclassifiable/Attainment		Unclassifiable/Attainment.

North Dakota—$PM_{2.5}$ [24-hour NAAQS]

Designated area	Designation for the 1997 NAAQS [a]		Designation for the 2006 NAAQS [a]	
	Date [1]	Type	Date [2]	Type
Grant County		Unclassifiable/Attainment		Unclassifiable/Attainment.
Griggs County		Unclassifiable/Attainment		Unclassifiable/Attainment.
Hettinger County		Unclassifiable/Attainment		Unclassifiable/Attainment.
Kidder County		Unclassifiable/Attainment		Unclassifiable/Attainment.
LaMoure County		Unclassifiable/Attainment		Unclassifiable/Attainment.
Logan County		Unclassifiable/Attainment		Unclassifiable/Attainment.
McHenry County		Unclassifiable/Attainment		Unclassifiable/Attainment.
McIntosh County		Unclassifiable/Attainment		Unclassifiable/Attainment.
McKenzie County		Unclassifiable/Attainment		Unclassifiable/Attainment.
McLean County		Unclassifiable/Attainment		Unclassifiable/Attainment.
Mercer County		Unclassifiable/Attainment		Unclassifiable/Attainment.
Morton County		Unclassifiable/Attainment		Unclassifiable/Attainment.
Mountrail County		Unclassifiable/Attainment		Unclassifiable/Attainment.
Nelson County		Unclassifiable/Attainment		Unclassifiable/Attainment.
Oliver County		Unclassifiable/Attainment		Unclassifiable/Attainment.
Pembina County		Unclassifiable/Attainment		Unclassifiable/Attainment.
Pierce County		Unclassifiable/Attainment		Unclassifiable/Attainment.
Ramsey County		Unclassifiable/Attainment		Unclassifiable/Attainment.
Ransom County		Unclassifiable/Attainment		Unclassifiable/Attainment.
Renville County		Unclassifiable/Attainment		Unclassifiable/Attainment.
Richland County		Unclassifiable/Attainment		Unclassifiable/Attainment.
Rolette County		Unclassifiable/Attainment		Unclassifiable/Attainment.
Sargent County		Unclassifiable/Attainment		Unclassifiable/Attainment.
Sheridan County		Unclassifiable/Attainment		Unclassifiable/Attainment.
Sioux County		Unclassifiable/Attainment		Unclassifiable/Attainment.
Slope County		Unclassifiable/Attainment		Unclassifiable/Attainment.
Stark County		Unclassifiable/Attainment		Unclassifiable/Attainment.
Steele County		Unclassifiable/Attainment		Unclassifiable/Attainment.
Stutsman County		Unclassifiable/Attainment		Unclassifiable/Attainment.
Towner County		Unclassifiable/Attainment		Unclassifiable/Attainment.
Traill County		Unclassifiable/Attainment		Unclassifiable/Attainment.
Walsh County		Unclassifiable/Attainment		Unclassifiable/Attainment.
Ward County		Unclassifiable/Attainment		Unclassifiable/Attainment.
Wells County		Unclassifiable/Attainment		Unclassifiable/Attainment.

North Dakota—$PM_{2.5}$ [24-hour NAAQS]

Designated area	Designation for the 1997 NAAQS [a]		Designation for the 2006 NAAQS [a]	
	Date [1]	Type	Date [2]	Type
Williams County		Unclassifiable/Attainment		Unclassifiable/Attainment.

[a] Includes Indian Country located in each county or area, except as otherwise specified.
[1] This date is 90 days after January 5, 2005, unless otherwise noted.
[2] This date is 30 days after November 13, 2009, unless otherwise noted.

North Dakota—2008 Lead NAAQS

Designated area	Designation for the 2008 NAAQS [a]	
	Date [1]	Type
Whole State		Unclassifiable/Attainment.

[a] Includes Indian Country located in each county or area, except as otherwise specified.
[1] December 31, 2011 unless otherwise noted.

[55 FR 23933, June 13, 1990, as amended at 56 FR 56809, Nov. 6, 1991; 60 FR 55798, 55799, Nov. 3, 1995; 63 FR 31071, June 5, 1998; 65 FR 45250, July 20, 2000; 69 FR 23925, Apr. 30, 2004; 70 FR 994, Jan. 5, 2005; 70 FR 44477, Aug. 3, 2005; 74 FR 58752, Nov. 13, 2009; 76 FR 72114, Nov. 22, 2011; 77 FR 9571, Feb. 17, 2012]

EFFECTIVE DATE NOTE: At 77 FR 30140, May 21, 2012, § 81.335 was amended by revising the table heading for ''North Dakota—Ozone (8-Hour Standard)'' to read ''North Dakota—1997 8-Hour Ozone NAAQS (Primary and Secondary)''; by adding a new table entitled ''North Dakota—2008 8-Hour Ozone NAAQS (Primary and Secondary)'' following the newly designated table ''North Dakota—1997 8-Hour Ozone NAAQS (Primary and Secondary)'', effective July 20, 2012. For the convenience of the user, the added text is set forth as follows:

§ 81.335 North Dakota.

* * * * *

North Dakota—2008 8-Hour Ozone NAAQS (Primary and secondary)

Designated area	Designation		Classification	
	Date [1]	Type	Date [1]	Type
Statewide and Areas of Indian Country		Unclassifiable/Attainment		

[1] This date is July 20, 2012, unless otherwise noted.

* * * * *

§ 81.336 Ohio.

Ohio—SO_2

Designated area	Does not meet primary standards	Does not meet secondary standards	Cannot be classified	Better than national standards
Athens County				X
Clermont County				X
Columbiana County				X
Coshocton County				X
Cuyahoga County				X
The remainder of Cuyahoga County	X			
Gallia County				X
Greene County				X
Hamilton County				X
Jefferson County:				
The Cities of Steubenville and Mingo Junction, Townships of Steubenville, Island Creek, Cross Creek, Knox and Wells				X
The remainder of Jefferson County				X
Lake County:				
The Cities of Eastlake, Timberlake, Lakeline, Willoughby (north of U.S. 20) and Mentor (north of U.S. 20, west of S.R. 306)				X

Ohio—SO_2

Designated area	Does not meet primary standards	Does not meet secondary standards	Cannot be classified	Better than national standards
The remainder of Lake County				X
Lorain County				X
Lucas County: The area east of Route 23 and west of the eastern boundary of Oregon Township				X
The remainder of Lucas County:.				
Mahoning County				X
Montgomery County				X
Morgan County:				
Center Township				X
The remainder of Morgan County				X
Summit County				X
Trumbull County				X
Washington County:				
Waterford Township				X
The remainder of Washington County				X
All other counties in the State of Ohio				X

Ohio—Carbon Monoxide

Designated Area	Designation		Classification	
	Date [1]	Type	Date [1]	Type
Cleveland Area				
Cuyahoga County	3/7/94	Attainment		
Cincinnati				
Hamilton County		Unclassifiable/Attainment		
Columbus				
Franklin County		Unclassifiable/Attainment		
Adams County		Unclassifiable/Attainment		
Allen County		Unclassifiable/Attainment		
Ashland County		Unclassifiable/Attainment		
Ashtabula County		Unclassifiable/Attainment		
Athens County		Unclassifiable/Attainment		
Auglaize County		Unclassifiable/Attainment		
Belmont County		Unclassifiable/Attainment		
Brown County		Unclassifiable/Attainment		
Butler County		Unclassifiable/Attainment		
Carroll County		Unclassifiable/Attainment		
Champaign County		Unclassifiable/Attainment		
Clark County		Unclassifiable/Attainment		
Clermont County		Unclassifiable/Attainment		
Clinton County		Unclassifiable/Attainment		
Columbiana County		Unclassifiable/Attainment		
Coshocton County		Unclassifiable/Attainment		
Crawford County		Unclassifiable/Attainment		
Darke County		Unclassifiable/Attainment		
Defiance County		Unclassifiable/Attainment		
Delaware County		Unclassifiable/Attainment		
Erie County		Unclassifiable/Attainment		
Fairfield County		Unclassifiable/Attainment		
Fayette County		Unclassifiable/Attainment		
Fulton County		Unclassifiable/Attainment		
Gallia County		Unclassifiable/Attainment		
Geauga County		Unclassifiable/Attainment		
Greene County		Unclassifiable/Attainment		
Guernsey County		Unclassifiable/Attainment		
Hancock County		Unclassifiable/Attainment		
Hardin County		Unclassifiable/Attainment		
Harrison County		Unclassifiable/Attainment		
Henry County		Unclassifiable/Attainment		
Highland County		Unclassifiable/Attainment		
Hocking County		Unclassifiable/Attainment		
Holmes County		Unclassifiable/Attainment		
Huron County		Unclassifiable/Attainment		
Jackson County		Unclassifiable/Attainment		
Jefferson County [2]		Unclassifiable/Attainment		
Knox County		Unclassifiable/Attainment		
Lake County		Unclassifiable/Attainment		
Lawrence County		Unclassifiable/Attainment		

Ohio—Carbon Monoxide

Designated Area	Designation		Classification	
	Date [1]	Type	Date [1]	Type
Licking County		Unclassifiable/Attainment		
Logan County		Unclassifiable/Attainment		
Lorain County		Unclassifiable/Attainment		
Lucas County		Unclassifiable/Attainment		
Madison County		Unclassifiable/Attainment		
Mahoning County		Unclassifiable/Attainment		
Marion County		Unclassifiable/Attainment		
Medina County		Unclassifiable/Attainment		
Meigs County		Unclassifiable/Attainment		
Mercer County		Unclassifiable/Attainment		
Miami County		Unclassifiable/Attainment		
Monroe County		Unclassifiable/Attainment		
Montgomery County		Unclassifiable/Attainment		
Morgan County		Unclassifiable/Attainment		
Morrow County		Unclassifiable/Attainment		
Muskingum County		Unclassifiable/Attainment		
Noble County		Unclassifiable/Attainment		
Ottawa County		Unclassifiable/Attainment		
Paulding County		Unclassifiable/Attainment		
Perry County		Unclassifiable/Attainment		
Pickaway County		Unclassifiable/Attainment		
Pike County		Unclassifiable/Attainment		
Portage County		Unclassifiable/Attainment		
Preble County		Unclassifiable/Attainment		
Putnam County		Unclassifiable/Attainment		
Richland County		Unclassifiable/Attainment		
Ross County		Unclassifiable/Attainment		
Sandusky County		Unclassifiable/Attainment		
Scioto County		Unclassifiable/Attainment		
Seneca County		Unclassifiable/Attainment		
Shelby County		Unclassifiable/Attainment		
Stark County		Unclassifiable/Attainment		
Summit County		Unclassifiable/Attainment		
Trumbull County		Unclassifiable/Attainment		
Tuscarawas County		Unclassifiable/Attainment		
Union County		Unclassifiable/Attainment		
Van Wert County		Unclassifiable/Attainment		
Vinton County		Unclassifiable/Attainment		
Warren County		Unclassifiable/Attainment		
Washington County		Unclassifiable/Attainment		
Wayne County		Unclassifiable/Attainment		
Williams County		Unclassifiable/Attainment		
Wood County		Unclassifiable/Attainment		
Wyandot County				

[1] This date is November 15, 1990, unless otherwise noted.

[2] The listed designation does not reflect EPA action under section 107(d)(4)(A). At the date of enactment of the Clean Air Act Amendments, Jefferson County, Ohio; Brooke County, West Virginia; and Hancock County, West Virginia, were designated Unclassifiable/attainment, by operation of law, under section 107(d)(1)(C) of the Clean Air Act. However, these States and EPA are reviewing whether to confirm or reverse that designation under the process set out under section 107(d)(4)(A) and will publish a separate notice to that effect.

Ohio—Ozone (1-Hour Standard)[3]

Designated area	Designation		Classification	
	Date [1]	Type	Date [1]	Type
Canton Area:				
Stark County		Attainment		
Cincinnati-Hamilton Area:	6/14/05	Attainment		
Butler County				
Clermont County				
Hamilton County				
Warren County				
Cleveland-Akron-Lorain Area:		Attainment		
Ashtabula County				
Cuyahoga County				
Geauga County				
Lake County				
Lorain County				
Medina County				
Portage County				

Ohio—Ozone (1-Hour Standard)[3]

Designated area	Designation		Classification	
	Date [1]	Type	Date [1]	Type
Summit County				
Clinton County Area:				
Clinton County		Attainment		
Columbiana County Area:				
Columbiana County		Attainment		
Columbus Area:				
Delaware County		Attainment		
Franklin County		Attainment		
Licking County		Attainment		
Dayton-Springfield Area:				
Clark County		Attainment		
Greene County		Attainment		
Miami County		Attainment		
Montgomery County		Attainment		
Preble County Area:				
Preble County		Attainment		
Steubenville Area:				
Jefferson County		Attainment		
Toledo Area:				
Lucas County		Attainment		
Wood County		Attainment		
Youngstown-Warren-Sharon Area:				
Mahoning County		Attainment		
Trumbull County		Attainment		
Adams County		Unclassifiable/Attainment		
Allen County		Unclassifiable/Attainment		
Ashland County		Unclassifiable/Attainment		
Athens County		Unclassifiable/Attainment		
Auglaize County		Unclassifiable/Attainment		
Belmont County		Unclassifiable/Attainment		
Brown County		Unclassifiable/Attainment		
Carroll County		Unclassifiable/Attainment		
Champaign County		Unclassifiable/Attainment		
Coshocton County		Unclassifiable/Attainment		
Crawford County		Unclassifiable/Attainment		
Darke County		Unclassifiable/Attainment		
Defiance County		Unclassifiable/Attainment		
Erie County		Unclassifiable/Attainment		
Fairfield County		Unclassifiable/Attainment		
Fayette County		Unclassifiable/Attainment		
Fulton County		Unclassifiable/Attainment		
Gallia County		Unclassifiable/Attainment		
Guernsey County		Unclassifiable/Attainment		
Hancock County		Unclassifiable/Attainment		
Hardin County		Unclassifiable/Attainment		
Harrison County		Unclassifiable/Attainment		
Henry County		Unclassifiable/Attainment		
Highland County		Unclassifiable/Attainment		
Hocking County		Unclassifiable/Attainment		
Holmes County		Unclassifiable/Attainment		
Huron County		Unclassifiable/Attainment		
Jackson County		Unclassifiable/Attainment		
Knox County		Unclassifiable/Attainment		
Lawrence County		Unclassifiable/Attainment		
Logan County		Unclassifiable/Attainment		
Madison County		Unclassifiable/Attainment		
Marion County		Unclassifiable/Attainment		
Meigs County		Unclassifiable/Attainment		
Mercer County		Unclassifiable/Attainment		
Monroe County		Unclassifiable/Attainment		
Morgan County		Unclassifiable/Attainment		
Morrow County		Unclassifiable/Attainment		
Muskingum County		Unclassifiable/Attainment		
Noble County		Unclassifiable/Attainment		
Ottawa County		Unclassifiable/Attainment		
Paulding County		Unclassifiable/Attainment		
Perry County		Unclassifiable/Attainment		
Pickaway County		Unclassifiable/Attainment		
Pike County		Unclassifiable/Attainment		
Putnam County		Unclassifiable/Attainment		
Richland County		Unclassifiable/Attainment		

Ohio—Ozone (1-Hour Standard)[3]

Designated area	Designation		Classification	
	Date [1]	Type	Date [1]	Type
Ross County		Unclassifiable/Attainment		
Sandusky County		Unclassifiable/Attainment		
Scioto County		Unclassifiable/Attainment		
Seneca County		Unclassifiable/Attainment		
Shelby County		Unclassifiable/Attainment		
Tuscarawas County		Unclassifiable/Attainment		
Union County		Unclassifiable/Attainment		
Van Wert County		Unclassifiable/Attainment		
Vinton County		Unclassifiable/Attainment		
Washington County		Unclassifiable/Attainment		
Wayne County		Unclassifiable/Attainment		
Williams County		Unclassifiable/Attainment		
Wyandot County		Unclassifiable/Attainment		

[1] This date is November 15, 1990, unless otherwise noted.
[3] The 1-hour standard is revoked effective June 15, 2005 for all areas in Ohio. The Canton, Cleveland-Akron-Lorain, Clinton Co, Columbus, Dayton-Springfield, Preble Co, Steubenville, Toledo, Youngstown-Warren-Sharon, and Columbiana Co. areas are maintenance areas for the 1-hour NAAQS for purposes of 40 CFR part 51 subpart X.

Ohio—PM–10

Designated Area	Designation		Classification	
	Date	Type	Date	Type
Cuyahoga County	1/10/01	Attainment		
Jefferson County				
The area bounded by Market Street (State Route 43) from the West Virginia/Ohio border west to Sunset Blvd. (U.S. Route 22), Sunset Blvd. west to the Steubenville Township/Cross Creek Township boundary, the Township boundary south to the Steubenville Corporation limit, the corporation boundary east to State Route 7, State Route 7 South to the Steubenville Township/Wells Township boundary, the Township boundary Unclassifiable east to the West Virginia/Ohio border, and North on the border to Market Street	1/10/01	Attainment		
Rest of State	11/15/90	Unclassifiable		

Ohio—NO_2 (1971 Annual Standard)

Designated area	Does not meet primary standards	Cannot be classified or better than national standards
State of Ohio		X

Ohio—NO_2 (2010 1-Hour Standard)

Designated area	Designation [a]	
	Date [1]	Type
Adams County		Unclassifiable/Attainment.
Allen County		Unclassifiable/Attainment.
Ashland County		Unclassifiable/Attainment.
Ashtabula County		Unclassifiable/Attainment.
Athens County		Unclassifiable/Attainment.
Auglaize County		Unclassifiable/Attainment.
Belmont County		Unclassifiable/Attainment.
Brown County		Unclassifiable/Attainment.
Butler County		Unclassifiable/Attainment.
Carroll County		Unclassifiable/Attainment.
Champaign County		Unclassifiable/Attainment.
Clark County		Unclassifiable/Attainment.
Clermont County		Unclassifiable/Attainment.
Clinton County		Unclassifiable/Attainment.
Columbiana County		Unclassifiable/Attainment.
Coshocton County		Unclassifiable/Attainment.
Crawford County		Unclassifiable/Attainment.

Ohio—NO_2 (2010 1-Hour Standard)

Designated area	Designation [a]	
	Date [1]	Type
Cuyahoga County		Unclassifiable/Attainment.
Darke County		Unclassifiable/Attainment.
Defiance County		Unclassifiable/Attainment.
Delaware County		Unclassifiable/Attainment.
Erie County		Unclassifiable/Attainment.
Fairfield County		Unclassifiable/Attainment.
Fayette County		Unclassifiable/Attainment.
Franklin County		Unclassifiable/Attainment.
Fulton County		Unclassifiable/Attainment.
Gallia County		Unclassifiable/Attainment.
Geauga County		Unclassifiable/Attainment.
Greene County		Unclassifiable/Attainment.
Guernsey County		Unclassifiable/Attainment.
Hamilton County		Unclassifiable/Attainment.
Hancock County		Unclassifiable/Attainment.
Hardin County		Unclassifiable/Attainment.
Harrison County		Unclassifiable/Attainment.
Henry County		Unclassifiable/Attainment.
Highland County		Unclassifiable/Attainment.
Hocking County		Unclassifiable/Attainment.
Holmes County		Unclassifiable/Attainment.
Huron County		Unclassifiable/Attainment.
Jackson County		Unclassifiable/Attainment.
Jefferson County		Unclassifiable/Attainment.
Knox County		Unclassifiable/Attainment.
Lake County		Unclassifiable/Attainment.
Lawrence County		Unclassifiable/Attainment.
Licking County		Unclassifiable/Attainment.
Logan County		Unclassifiable/Attainment.
Lorain County		Unclassifiable/Attainment.
Lucas County		Unclassifiable/Attainment.
Madison County		Unclassifiable/Attainment.
Mahoning County		Unclassifiable/Attainment.
Marion County		Unclassifiable/Attainment.
Medina County		Unclassifiable/Attainment.
Meigs County		Unclassifiable/Attainment.
Mercer County		Unclassifiable/Attainment.
Miami County		Unclassifiable/Attainment.
Monroe County		Unclassifiable/Attainment.
Montgomery County		Unclassifiable/Attainment.
Morgan County		Unclassifiable/Attainment.
Morrow County		Unclassifiable/Attainment.
Muskingum County		Unclassifiable/Attainment.
Noble County		Unclassifiable/Attainment.
Ottawa County		Unclassifiable/Attainment.
Paulding County		Unclassifiable/Attainment.
Perry County		Unclassifiable/Attainment.
Pickaway County		Unclassifiable/Attainment.
Pike County		Unclassifiable/Attainment.
Portage County		Unclassifiable/Attainment.
Preble County		Unclassifiable/Attainment.
Putnam County		Unclassifiable/Attainment.
Richland County		Unclassifiable/Attainment.
Ross County		Unclassifiable/Attainment.
Sandusky County		Unclassifiable/Attainment.
Scioto County		Unclassifiable/Attainment.
Seneca County		Unclassifiable/Attainment.
Shelby County		Unclassifiable/Attainment.
Stark County		Unclassifiable/Attainment.
Summit County		Unclassifiable/Attainment.
Trumbull County		Unclassifiable/Attainment.
Tuscarawas County		Unclassifiable/Attainment.
Union County		Unclassifiable/Attainment.
Van Wert County		Unclassifiable/Attainment.
Vinton County		Unclassifiable/Attainment.
Warren County		Unclassifiable/Attainment.
Washington County		Unclassifiable/Attainment.
Wayne County		Unclassifiable/Attainment.
Williams County		Unclassifiable/Attainment.
Wood County		Unclassifiable/Attainment.

Ohio—NO_2 (2010 1-Hour Standard)

Designated area	Designation [a]	
	Date [1]	Type
Wyandot County	.....	Unclassifiable/Attainment.

[a] Includes Indian Country located in each county or area, except as otherwise specified.
[1] This date is 90 days after October 31, 2011, unless otherwise noted.

Ohio—Ozone (8-Hour Standard)

Designated area	Designation [a]		Category/classification	
	Date [1]	Type	Date [1]	Type
Canton-Massillon, OH: Stark County	6/15/07	Attainment.		
Cincinnati–Hamilton, OH–KY–IN:				
Butler County	May 11, 2010	Attainment		
Clermont County				
Clinton County				
Hamilton County				
Warren County				
Cleveland-Akron-Lorain, OH:				
Ashtabula County.				
Cuyahoga County	9/15/2009	Attainment.		
Geauga County.				
Lake County.				
Lorain County.				
Medina County.				
Portage County.				
Summit County.				
Columbus, OH:				
Delaware County	9/15/09	Attainment		
Fairfield County.				
Franklin County.				
Knox County.				
Licking County.				
Madison County.				
Dayton-Springfield, OH:				
Clark County	August 13, 2007	Attainment.		
Greene County.				
Miami County.				
Montgomery County.				
Lima, OH: Allen County	6/15/07	Attainment.		
Parkersburg-Marietta, WV-OH: Washington County	6/15/07	Attainment.		
Steubenville-Weirton, OH-WV: Jefferson County	6/15/07	Attainment.	.....	
Toledo Area:				
Lucas County	08/09/07	Attainment.		
Wood County	08/09/07	Attainment.		
Wheeling, WV–OH: Belmont County	6/15/2007	Attainment.		
Youngstown-Warren-Sharon, PA-OH:	June 12, 2007			
Columbiana County	.....	Attainment	.....	
Mahoning County	.....	Attainment	.....	
Trumbull County	.....	Attainment	.....	
Rest of State:				
Adams County	.....	Unclassifiable/Attainment		
Ashland County	.....	Unclassifiable/Attainment		
Athens County.				
Auglaize County	.....	Unclassifiable/Attainment		
Brown County	.....	Unclassifiable/Attainment		
Carroll County	.....	Unclassifiable/Attainment		
Champaign County	.....	Unclassifiable/Attainment		
Coshocton County	.....	Unclassifiable/Attainment		
Crawford County	.....	Unclassifiable/Attainment		
Darke County	.....	Unclassifiable/Attainment		
Defiance County	.....	Unclassifiable/Attainment		
Erie County	.....	Unclassifiable/Attainment		
Fayette County	.....	Unclassifiable/Attainment		
Fulton County	.....	Unclassifiable/Attainment		
Gallia County	.....	Unclassifiable/Attainment		
Guernsey County	.....	Unclassifiable/Attainment		
Hancock County	.....	Unclassifiable/Attainment		
Hardin County	.....	Unclassifiable/Attainment		

Ohio—Ozone (8-Hour Standard)

Designated area	Designation [a]		Category/classification	
	Date [1]	Type	Date [1]	Type
Harrison County		Unclassifiable/Attainment		
Henry County		Unclassifiable/Attainment		
Highland County		Unclassifiable/Attainment		
Hocking County		Unclassifiable/Attainment		
Holmes County		Unclassifiable/Attainment		
Huron County		Unclassifiable/Attainment		
Jackson County		Unclassifiable/Attainment		
Lawrence County		Unclassifiable/Attainment		
Logan County		Unclassifiable/Attainment		
Marion County		Unclassifiable/Attainment		
Meigs County		Unclassifiable/Attainment		
Mercer County		Unclassifiable/Attainment		
Monroe County		Unclassifiable/Attainment		
Morgan County		Unclassifiable/Attainment		
Morrow County		Unclassifiable/Attainment		
Muskingum County		Unclassifiable/Attainment		
Noble County		Unclassifiable/Attainment		
Ottawa County		Unclassifiable/Attainment		
Paulding County		Unclassifiable/Attainment		
Perry County		Unclassifiable/Attainment		
Pickaway County		Unclassifiable/Attainment		
Pike County		Unclassifiable/Attainment		
Preble County		Unclassifiable/Attainment		
Putnam County		Unclassifiable/Attainment		
Richland County		Unclassifiable/Attainment		
Ross County		Unclassifiable/Attainment		
Sandusky County		Unclassifiable/Attainment		
Scioto County		Unclassifiable/Attainment		
Seneca County		Unclassifiable/Attainment		
Shelby County		Unclassifiable/Attainment		
Tuscarawas County		Unclassifiable/Attainment		
Union County		Unclassifiable/Attainment		
Van Wert County		Unclassifiable/Attainment		
Vinton County		Unclassifiable/Attainment		
Wayne County		Unclassifiable/Attainment		
Williams County		Unclassifiable/Attainment		
Wyandot County		Unclassifiable/Attainment		

[a] Includes Indian Country located in each county or area, except as otherwise specified.
[1] This date is June 15, 2004, unless otherwise noted.

Ohio—$PM_{2.5}$ (Annual NAAQS)

Designated area	Designation [a]	
	Date [1]	Type
Canton-Massillon, OH:		
Stark County		Nonattainment.
Cincinnati-Hamilton, Ohio:	12/23/11	Attainment.
Butler County.		
Clermont County.		
Hamilton County.		
Warren County.		
Cleveland-Akron-Lorain, OH:		
Ashtabula County (part)		Nonattainment.
Ashtabula Township		
Cuyahoga County		Nonattainment.
Lake County		Nonattainment.
Lorain County		Nonattainment.
Medina County		Nonattainment.
Portage County		Nonattainment.
Summit County		Nonattainment.
Columbus, OH:		
Coshocton County (part)		Nonattainment.
Franklin Township		
Delaware County		Nonattainment.
Fairfield County		Nonattainment.
Franklin County		Nonattainment.
Licking County		Nonattainment.
Dayton-Springfield, OH:		
Clark County		Nonattainment.

Ohio—$PM_{2.5}$ (Annual NAAQS)

Designated area	Designation [a]	
	Date [1]	Type
Greene County		Nonattainment.
Montgomery County		Nonattainment.
Huntington-Ashland, WV-KY-OH:		
Adams County (part)		Nonattainment.
Monroe Township, Sprigg Township		
Gallia County (part)		Nonattainment.
Addison Township, Cheshire Township		Nonattainment.
Lawrence County		Nonattainment.
Scioto County		Nonattainment.
Parkersburg-Marietta, WV-OH:		
Washington County		Nonattainment.
Steubenville-Weirton, OH-WV:		
Jefferson County		Nonattainment.
Toledo, OH:		
Lucas County		Unclassifiable/Attainment.
Wood County		Unclassifiable/Attainment.
Wheeling, WV-OH:		
Belmont County		Nonattainment.
Youngstown-Warren-Sharon, OH-PA:		
Columbiana County		Unclassifiable/Attainment.
Mahoning County		Unclassifiable/Attainment.
Trumbull County		Unclassifiable/Attainment.
Rest of State:		
Adams County (remainder)		Unclassifiable/Attainment.
Allen County		Unclassifiable/Attainment.
Ashland County		Unclassifiable/Attainment.
Ashtabula County (remainder)		Unclassifiable/Attainment.
Athens County		Unclassifiable/Attainment.
Auglaize County		Unclassifiable/Attainment.
Brown County		Unclassifiable/Attainment.
Carroll County		Unclassifiable/Attainment.
Champaign County		Unclassifiable/Attainment.
Clinton County		Unclassifiable/Attainment.
Coshocton County (remainder)		Unclassifiable/Attainment.
Crawford County		Unclassifiable/Attainment.
Darke County		Unclassifiable/Attainment.
Defiance County		Unclassifiable/Attainment.
Erie County		Unclassifiable/Attainment.
Fayette County		Unclassifiable/Attainment.
Fulton County		Unclassifiable/Attainment.
Gallia County (remainder)		Unclassifiable/Attainment.
Geauga County		Unclassifiable/Attainment.
Guernsey County		Unclassifiable/Attainment.
Hancock County		Unclassifiable/Attainment.
Hardin County		Unclassifiable/Attainment.
Harrison County		Unclassifiable/Attainment.
Henry County		Unclassifiable/Attainment.
Highland County		Unclassifiable/Attainment.
Hocking County		Unclassifiable/Attainment.
Holmes County		Unclassifiable/Attainment.
Huron County		Unclassifiable/Attainment.
Jackson County		Unclassifiable/Attainment.
Knox County		Unclassifiable/Attainment.
Logan County		Unclassifiable/Attainment.
Madison County		Unclassifiable/Attainment.
Marion County		Unclassifiable/Attainment.
Meigs County		Unclassifiable/Attainment.
Mercer County		Unclassifiable/Attainment.
Miami County		Unclassifiable/Attainment.
Monroe County		Unclassifiable/Attainment.
Morgan County		Unclassifiable/Attainment.
Morrow County		Unclassifiable/Attainment.
Muskingum County		Unclassifiable/Attainment.
Noble County		Unclassifiable/Attainment.
Ottawa County		Unclassifiable/Attainment.
Paulding County		Unclassifiable/Attainment.
Perry County		Unclassifiable/Attainment.
Pickaway County		Unclassifiable/Attainment.
Pike County		Unclassifiable/Attainment.
Preble County		Unclassifiable/Attainment.
Putnam County		Unclassifiable/Attainment.

Ohio—$PM_{2.5}$ (Annual NAAQS)

Designated area	Designation [a]	
	Date [1]	Type
Richland County		Unclassifiable/Attainment.
Ross County		Unclassifiable/Attainment.
Sandusky County		Unclassifiable/Attainment.
Seneca County		Unclassifiable/Attainment.
Shelby County		Unclassifiable/Attainment.
Tuscarawas County		Unclassifiable/Attainment.
Union County		Unclassifiable/Attainment.
Van Wert County		Unclassifiable/Attainment.
Vinton County		Unclassifiable/Attainment.
Wayne County		Unclassifiable/Attainment.
Williams County		Unclassifiable/Attainment.
Wyandot County		Unclassifiable/Attainment.

[a] Includes Indian Country located in each county or area, except as otherwise specified.
[1] This date is 90 days after January 5, 2005, unless otherwise noted.

Ohio—$PM_{2.5}$ [24-hour NAAQS]

Designated area	Designation for the 1997 NAAQS [a]		Designation for the 2006 NAAQS [a]	
	Date [1]	Type	Date [2]	Type
Canton-Massillon, OH:				
Stark County		Unclassifiable/Attainment		Nonattainment.
Cleveland-Akron-Lorain, OH:				
Cuyahoga County		Unclassifiable/Attainment		Nonattainment.
Lake County		Unclassifiable/Attainment		Nonattainment.
Lorain County		Unclassifiable/Attainment		Nonattainment.
Medina County		Unclassifiable/Attainment		Nonattainment.
Portage County		Unclassifiable/Attainment		Nonattainment.
Summit County		Unclassifiable/Attainment		Nonattainment.
Steubenville-Weirton, OH-WV:				
Jefferson County		Unclassifiable/Attainment		Nonattainment.
Rest of State:				
Adams County		Unclassifiable/Attainment		Unclassifiable/Attainment.
Allen County		Unclassifiable/Attainment		Unclassifiable/Attainment.
Ashland County		Unclassifiable/Attainment		Unclassifiable/Attainment.
Ashtabula County		Unclassifiable/Attainment		Unclassifiable/Attainment.
Athens County		Unclassifiable/Attainment		Unclassifiable/Attainment.
Auglaize County		Unclassifiable/Attainment		Unclassifiable/Attainment.
Belmont County		Unclassifiable/Attainment		Unclassifiable/Attainment.
Brown County		Unclassifiable/Attainment		Unclassifiable/Attainment.
Butler County		Unclassifiable/Attainment		Unclassifiable/Attainment.
Carroll County		Unclassifiable/Attainment		Unclassifiable/Attainment.
Champaign County		Unclassifiable/Attainment		Unclassifiable/Attainment.
Clark County		Unclassifiable/Attainment		Unclassifiable/Attainment.
Clermont County		Unclassifiable/Attainment		Unclassifiable/Attainment.
Clinton County		Unclassifiable/Attainment		Unclassifiable/Attainment.
Columbiana County		Unclassifiable/Attainment		Unclassifiable/Attainment.

Ohio—$PM_{2.5}$ [24-hour NAAQS]

Designated area	Designation for the 1997 NAAQS [a]		Designation for the 2006 NAAQS [a]	
	Date [1]	Type	Date [2]	Type
Coshocton County		Unclassifiable/Attainment		Unclassifiable/Attainment.
Crawford County		Unclassifiable/Attainment		Unclassifiable/Attainment.
Darke County		Unclassifiable/Attainment		Unclassifiable/Attainment.
Defiance County		Unclassifiable/Attainment		Unclassifiable/Attainment.
Delaware County		Unclassifiable/Attainment		Unclassifiable/Attainment.
Erie County		Unclassifiable/Attainment		Unclassifiable/Attainment.
Fairfield County		Unclassifiable/Attainment		Unclassifiable/Attainment.
Fayette County		Unclassifiable/Attainment		Unclassifiable/Attainment.
Franklin County		Unclassifiable/Attainment		Unclassifiable/Attainment.
Fulton County		Unclassifiable/Attainment		Unclassifiable/Attainment.
Gallia County		Unclassifiable/Attainment		Unclassifiable/Attainment.
Geauga County		Unclassifiable/Attainment		Unclassifiable/Attainment.
Greene County		Unclassifiable/Attainment		Unclassifiable/Attainment.
Guernsey County		Unclassifiable/Attainment		Unclassifiable/Attainment.
Hamilton County		Unclassifiable/Attainment		Unclassifiable/Attainment.
Hancock County		Unclassifiable/Attainment		Unclassifiable/Attainment.
Hardin County		Unclassifiable/Attainment		Unclassifiable/Attainment.
Harrison County		Unclassifiable/Attainment		Unclassifiable/Attainment.
Henry County		Unclassifiable/Attainment		Unclassifiable/Attainment.
Highland County		Unclassifiable/Attainment		Unclassifiable/Attainment.
Hocking County		Unclassifiable/Attainment		Unclassifiable/Attainment.
Holmes County		Unclassifiable/Attainment		Unclassifiable/Attainment.
Huron County		Unclassifiable/Attainment		Unclassifiable/Attainment.
Jackson County		Unclassifiable/Attainment		Unclassifiable/Attainment.
Knox County		Unclassifiable/Attainment		Unclassifiable/Attainment.
Lawrence County		Unclassifiable/Attainment		Unclassifiable/Attainment.
Licking County		Unclassifiable/Attainment		Unclassifiable/Attainment.
Logan County		Unclassifiable/Attainment		Unclassifiable/Attainment.
Lucas County		Unclassifiable/Attainment		Unclassifiable/Attainment.
Madison County		Unclassifiable/Attainment		Unclassifiable/Attainment.
Mahoning County		Unclassifiable/Attainment		Unclassifiable/Attainment.
Marion County		Unclassifiable/Attainment		Unclassifiable/Attainment.
Meigs County		Unclassifiable/Attainment		Unclassifiable/Attainment.
Mercer County		Unclassifiable/Attainment		Unclassifiable/Attainment.
Miami County		Unclassifiable/Attainment		Unclassifiable/Attainment.

Ohio—$PM_{2.5}$ [24-hour NAAQS]

Designated area	Designation for the 1997 NAAQS [a]		Designation for the 2006 NAAQS [a]	
	Date [1]	Type	Date [2]	Type
Monroe County		Unclassifiable/Attainment		Unclassifiable/Attainment.
Montgomery County		Unclassifiable/Attainment		Unclassifiable/Attainment.
Morgan County		Unclassifiable/Attainment		Unclassifiable/Attainment.
Morrow County		Unclassifiable/Attainment		Unclassifiable/Attainment.
Muskingum County		Unclassifiable/Attainment		Unclassifiable/Attainment.
Noble County		Unclassifiable/Attainment		Unclassifiable/Attainment.
Ottawa County		Unclassifiable/Attainment		Unclassifiable/Attainment.
Paulding County		Unclassifiable/Attainment		Unclassifiable/Attainment.
Perry County		Unclassifiable/Attainment		Unclassifiable/Attainment.
Pickaway County		Unclassifiable/Attainment		Unclassifiable/Attainment.
Pike County		Unclassifiable/Attainment		Unclassifiable/Attainment.
Preble County		Unclassifiable/Attainment		Unclassifiable/Attainment.
Putnam County		Unclassifiable/Attainment		Unclassifiable/Attainment.
Richland County		Unclassifiable/Attainment		Unclassifiable/Attainment.
Ross County		Unclassifiable/Attainment		Unclassifiable/Attainment.
Sandusky County		Unclassifiable/Attainment		Unclassifiable/Attainment.
Scioto County		Unclassifiable/Attainment		Unclassifiable/Attainment.
Seneca County		Unclassifiable/Attainment		Unclassifiable/Attainment.
Shelby County		Unclassifiable/Attainment		Unclassifiable/Attainment.
Trumbull County		Unclassifiable/Attainment		Unclassifiable/Attainment.
Tuscarawas County		Unclassifiable/Attainment		Unclassifiable/Attainment.
Union County		Unclassifiable/Attainment		Unclassifiable/Attainment.
Van Wert County		Unclassifiable/Attainment		Unclassifiable/Attainment.
Vinton County		Unclassifiable/Attainment		Unclassifiable/Attainment.
Warren County		Unclassifiable/Attainment		Unclassifiable/Attainment.
Washington County		Unclassifiable/Attainment		Unclassifiable/Attainment.
Wayne County		Unclassifiable/Attainment		Unclassifiable/Attainment.
Williams County		Unclassifiable/Attainment		Unclassifiable/Attainment.
Wood County		Unclassifiable/Attainment		Unclassifiable/Attainment.
Wyandot County		Unclassifiable/Attainment		Unclassifiable/Attainment.

[a] Includes Indian Country located in each county or area, except as otherwise specified.
[1] This date is 90 days after January 5, 2005, unless otherwise noted.
[2] This date is 30 days after November 13, 2009, unless otherwise noted.

Ohio—1978 Lead NAAQS

Designated area	Designation		Classification	
	Date	Type	Date	Type
Cuyahoga County (part)				

Ohio—1978 Lead NAAQS

Designated area	Designation		Classification	
	Date	Type	Date	Type
Subcounty area in the vicinity of Master Metals On the west by Interstate 71, on the north by the Conrail tracks, on the east by Interstate 77, and on the south by a line running from the intersection of Interstate 71 and Clark Avenue to the intersection of Interstate 77 and Pershing Avenue.	1/6/92	Unclassifiable		
Rest of State Not Designated.				

Ohio—2008 Lead NAAQS

Designated area	Designation for the 2008 NAAQS [a]	
	Date [1]	Type
Bellefontaine, OH:		
Logan County (part)	12/31/10	Nonattainment.
The portions of Logan County that are bounded by: sections 27, 28, 33, and 34 of Lake Township.		
Cleveland, OH:		
Cuyahoga County (part)	12/31/10	Nonattainment.
The portions of Cuyahoga County that are bounded on the west by Washington Park Blvd./Crete Ave./East 49th St., on the east by East 71st St., on the north by Fleet Ave., and on the south by Grant Ave.		
Delta, OH:		
Fulton County (part)	12/31/10	Nonattainment.
The portions of Fulton County that are bounded by: sections 12 and 13 of York Township and sections 7 and 18 of Swan Creek Township.		
Rest of State		Unclassifiable/Attainment.

[a] Includes Indian Country located in each county or area, except as otherwise specified.
[1] December 31, 2011 unless otherwise noted.

[43 FR 46011, Oct. 5, 1978]

EDITORIAL NOTE: For FEDERAL REGISTER citations affecting §81.336, see the List of CFR Sections Affected, which appears in the Finding Aids section of the printed volume and at *www.fdsys.gov*.

EFFECTIVE DATE NOTE: At 77 FR 30140, May 21, 2012, §81.336 was amended by revising the table heading for ''Ohio—Ozone (8-Hour Standard)'' to read ''Ohio—1997 8-Hour Ozone NAAQS (Primary and Secondary)''; by adding a new table entitled ''Ohio—2008 8-Hour Ozone NAAQS (Primary and Secondary)'' following the newly designated table ''Ohio—1997 8-Hour Ozone NAAQS (Primary and Secondary)'', effective July 20, 2012. For the convenience of the user, the added text is set forth as follows:

§81.336 Ohio.

* * * * *

Ohio—2008 8-Hour Ozone NAAQS (Primary and secondary)

Designated area	Designation		Classification	
	Date [1]	Type	Date [1]	Type
Cincinnati, OH-KY-IN: [2]		Nonattainment		Marginal.
Butler County				
Clermont County				
Clinton County				
Hamilton County				
Warren County				
Cleveland-Akron-Lorain, OH: [2]		Nonattainment		Marginal.
Ashtabula County				
Cuyahoga County				
Geauga County				
Lake County				
Lorain County				

Ohio—2008 8-Hour Ozone NAAQS (Primary and secondary)

Designated area	Designation		Classification	
	Date [1]	Type	Date [1]	Type
Medina County				
Portage County				
Summit County				
Columbus, OH: [2]	.....	Nonattainment	.....	Marginal.
Delaware County				
Fairfield County				
Franklin County				
Knox County				
Licking County				
Madison County				
Rest of State: [3]	.....	Unclassifiable/Attainment		

[1] This date is July 20, 2012, unless otherwise noted.
[2] Excludes Indian country located in each area, unless otherwise noted.
[3] Includes any Indian country in each county or area, unless otherwise specified.

* * * * *

§ 81.337 Oklahoma.

Oklahoma—TSP

Designated area	Does not meet primary standards	Does not meet secondary standards	Cannot be classified	Better than national standards
AQCR 017				X
AQCR 022				X
AQCR 184				X
AQCR 185				X
AQCR 186:				
Tulsa County			X	
Portions of Muskogee County			X	
Portions of Mayes County			X	
Remainder of AQCR				X
AQCR 187				X
AQCR 188				X
AQCR 189:				
Portion of Comanche County			X	
Remainder of AQCR				X

Oklahoma—SO_2

Designated area	Does not meet primary standards	Does not meet secondary standards	Cannot be classified	Better than national standards
AQCR 017				X
AQCR 184				X
AQCR 185				X
AQCR 186				X
AQCR 187				X
AQCR 188				X
AQCR 189				X

Oklahoma—Carbon Monoxide

Designated Area	Designation		Classification	
	Date [1]	Type	Date [1]	Type
AQCR 017 Metropolitan Fort Smith Interstate	.....	Unclassifiable/Attainment		
Adair County				
Cherokee County				
Le Flore County				
Sequoyah County				
AQCR 022 Shreveport-Texarkana-Tyler Interstate	.....	Unclassifiable/Attainment		
McCurtain County				
AQCR 184 Central Oklahoma Intrastate	.....	Unclassifiable/Attainment		
Canadian County				

Oklahoma—Carbon Monoxide

Designated Area	Designation		Classification	
	Date [1]	Type	Date [1]	Type
Cleveland County				
Grady County				
Kingfisher County				
Lincoln County				
Logan County				
McClain County				
Oklahoma County				
Pottawatomie County				
AQCR 185 North Central Oklahoma Intrastate	.....	Unclassifiable/Attainment		
Garfield County				
Grant County				
Kay County				
Noble County				
Payne County				
AQCR 186 Northeastern Oklahoma Intrastate	.....	Unclassifiable/Attainment		
Craig County				
Creek County				
Delaware County				
Mayes County				
Muskogee County				
Nowata County				
Okmulgee County				
Osage County				
Ottawa County				
Pawnee County				
Rogers County				
Tulsa County				
Wagoner County				
Washington County				
AQCR 187 Northwestern Oklahoma Intrastate	.....	Unclassifiable/Attainment		
Alfalfa County				
Beaver County				
Blaine County				
Cimarron County				
Custer County				
Dewey County				
Ellis County				
Harper County				
Major County				
Roger Mills County				
Texas County				
Woods County				
Woodward County				
AQCR 188 Southeastern Oklahoma Intrastate	.....	Unclassifiable/Attainment		
Atoka County				
Bryan County				
Carter County				
Choctaw County				
Coal County				
Garvin County				
Haskell County				
Hughes County				
Johnston County				
Latimer County				
Love County				
Marshall County				
McIntosh County				
Murray County				
Okfuskee County				
Pittsburg County				
Pontotoc County				
Pushmataha County				
Seminole County				
AQCR 189 Southwestern Oklahoma Intrastate	.....	Unclassifiable/Attainment		
Beckham County				
Caddo County				
Comanche County				
Cotton County				
Greer County				
Harmon County				
Jackson County				

Oklahoma—Carbon Monoxide

Designated Area	Designation		Classification	
	Date [1]	Type	Date [1]	Type
Jefferson County				
Kiowa County				
Stephens County				
Tillman County				
Washita County				

[1] This date is November 15, 1990, unless otherwise noted.

Oklahoma—Ozone (1-Hour Standard)[2]

Designated area	Designation		Classification	
	Date [1]	Type	Date [1]	Type
AQCR 017 Metropolitan Fort Smith Interstate	.....	Unclassifiable/Attainment		
Adair County				
Cherokee County				
Le Flore County				
Sequoyah County				
AQCR 022 Shreveport-Texarkana-Tyler Intrastate	.....	Unclassifiable/Attainment		
McCurtain County				
AQCR 184 Central Oklahoma Intrastate (part).				
Cleveland County	.....	Unclassifiable/Attainment		
Oklahoma County	.....	Unclassifiable/Attainment		
AQCR 184 Central Oklahoma Intrastate (Remainder of).	.....	Unclassifiable/Attainment		
Canadian County				
Grady County				
Kingfisher County				
Lincoln County				
Logan County				
McClain County				
Pottawatomie County				
AQCR 185 North Central Oklahoma Intrastate	.....	Unclassifiable/Attainment		
Garfield County				
Grant County				
Kay County				
Noble County				
Payne County				
AQCR 186 Northeastern Oklahoma Intrastate	.....	Unclassifiable/Attainment		
Craig County				
Creek County				
Delaware County				
Mayes County				
Muskogee County				
Nowata County				
Okmulgee County				
Osage County				
Ottawa County				
Pawnee County				
Rogers County				
Tulsa County				
Wagoner County				
Washington County				
AQCR 187 Northwestern Oklahoma Intrastate	.....	Unclassifiable/Attainment		
Alfalfa County				
Beaver County				
Blaine County				
Cimarron County				
Custer County				
Dewey County				
Ellis County				
Harper County				
Major County				
Roger Mills County				
Texas County				
Woods County				
Woodward County				
AQCR 188 Southeastern Oklahoma Intrastate	.....	Unclassifiable/Attainment		
Atoka County				
Bryan County				
Carter County				

Oklahoma—Ozone (1-Hour Standard)[2]

Designated area	Designation		Classification	
	Date [1]	Type	Date [1]	Type
Choctaw County				
Coal County				
Garvin County				
Haskell County				
Hughes County				
Johnston County				
Latimer County				
Love County				
Marshall County				
McIntosh County				
Murray County				
Okfuskee County				
Pittsburg County				
Pontotoc County				
Pushmataha County				
Seminole County				
AQCR 189 Southwestern Oklahoma Intrastate	.....	Unclassifiable/Attainment		
Beckham County				
Caddo County				
Comanche County				
Cotton County				
Greer County				
Harmon County				
Jackson County				
Jefferson County				
Kiowa County				
Stephens County				
Tillman County				
Washita County				

[1] This date is October 18, 2000, unless otherwise noted.
[2] The 1-hour ozone standard is revoked effective June 15, 2005 for all areas in Oklahoma.

Oklahoma—NO_2 (1971 Annual Standard)

Designated area	Does not meet primary standards	Cannot be classified or better than national standards
AQCR 017	.....	X
AQCR 184	.....	X
AQCR 185	.....	X
AQCR 186	.....	X
AQCR 187	.....	X
AQCR 188	.....	X
AQCR 189	.....	X

Oklahoma—NO_2 (2010 1-Hour Standard)

Designated area	Designation [a]	
	Date [1]	Type
Adair County	.....	Unclassifiable/Attainment.
Alfalfa County	.....	Unclassifiable/Attainment.
Atoka County	.....	Unclassifiable/Attainment.
Beaver County	.....	Unclassifiable/Attainment.
Beckham County	.....	Unclassifiable/Attainment.
Blaine County	.....	Unclassifiable/Attainment.
Bryan County	.....	Unclassifiable/Attainment.
Caddo County	.....	Unclassifiable/Attainment.
Canadian County	.....	Unclassifiable/Attainment.
Carter County	.....	Unclassifiable/Attainment.
Cherokee County	.....	Unclassifiable/Attainment.
Choctaw County	.....	Unclassifiable/Attainment.
Cimarron County	.....	Unclassifiable/Attainment.
Cleveland County	.....	Unclassifiable/Attainment.
Coal County	.....	Unclassifiable/Attainment.
Comanche County	.....	Unclassifiable/Attainment.
Cotton County	.....	Unclassifiable/Attainment.
Craig County	.....	Unclassifiable/Attainment.
Creek County	.....	Unclassifiable/Attainment.

Oklahoma—NO_2 (2010 1-Hour Standard)

Designated area	Designation [a]	
	Date [1]	Type
Custer County		Unclassifiable/Attainment.
Delaware County		Unclassifiable/Attainment.
Dewey County		Unclassifiable/Attainment.
Ellis County		Unclassifiable/Attainment.
Garfield County		Unclassifiable/Attainment.
Garvin County		Unclassifiable/Attainment.
Grady County		Unclassifiable/Attainment.
Grant County		Unclassifiable/Attainment.
Greer County		Unclassifiable/Attainment.
Harmon County		Unclassifiable/Attainment.
Harper County		Unclassifiable/Attainment.
Haskell County		Unclassifiable/Attainment.
Hughes County		Unclassifiable/Attainment.
Jackson County		Unclassifiable/Attainment.
Jefferson County		Unclassifiable/Attainment.
Johnston County		Unclassifiable/Attainment.
Kay County		Unclassifiable/Attainment.
Kingfisher County		Unclassifiable/Attainment.
Kiowa County		Unclassifiable/Attainment.
Latimer County		Unclassifiable/Attainment.
Le Flore County		Unclassifiable/Attainment.
Lincoln County		Unclassifiable/Attainment.
Logan County		Unclassifiable/Attainment.
Love County		Unclassifiable/Attainment.
Major County		Unclassifiable/Attainment.
Marshall County		Unclassifiable/Attainment.
Mayes County		Unclassifiable/Attainment.
McClain County		Unclassifiable/Attainment.
McCurtain County		Unclassifiable/Attainment.
McIntosh County		Unclassifiable/Attainment.
Murray County		Unclassifiable/Attainment.
Muskogee County		Unclassifiable/Attainment.
Noble County		Unclassifiable/Attainment.
Nowata County		Unclassifiable/Attainment.
Okfuskee County		Unclassifiable/Attainment.
Oklahoma County		Unclassifiable/Attainment.
Okmulgee County		Unclassifiable/Attainment.
Osage County		Unclassifiable/Attainment.
Ottawa County		Unclassifiable/Attainment.
Pawnee County		Unclassifiable/Attainment.
Payne County		Unclassifiable/Attainment.
Pittsburg County		Unclassifiable/Attainment.
Pontotoc County		Unclassifiable/Attainment.
Pottawatomie County		Unclassifiable/Attainment.
Pushmataha County		Unclassifiable/Attainment.
Roger Mills County		Unclassifiable/Attainment.
Rogers County		Unclassifiable/Attainment.
Seminole County		Unclassifiable/Attainment.
Sequoyah County		Unclassifiable/Attainment.
Stephens County		Unclassifiable/Attainment.
Texas County		Unclassifiable/Attainment.
Tillman County		Unclassifiable/Attainment.
Tulsa County		Unclassifiable/Attainment.
Wagoner County		Unclassifiable/Attainment.
Washington County		Unclassifiable/Attainment.
Washita County		Unclassifiable/Attainment.
Woods County		Unclassifiable/Attainment.
Woodward County		Unclassifiable/Attainment.

[a] Includes Indian Country located in each county or area, except as otherwise specified.
[1] This date is 90 days after October 31, 2011, unless otherwise noted.

Oklahoma—Ozone (8-Hour Standard)

Designated area	Designation [a]		Category/classification	
	Date [1]	Type	Date [1]	Type
AQCR 017 Metropolitan Fort Smith Interstate		Unclassifiable/Attainment		

Oklahoma—Ozone (8-Hour Standard)

Designated area	Designation [a]		Category/classification	
	Date [1]	Type	Date [1]	Type
Adair County				
Cherokee County				
Le Flore County				
Sequoyah County				
AQCR 022 Shreveport-Texarkana-Tyler Intrastate: McCurtain County.	.....	Unclassifiable/Attainment		
AQCR 184 Central Oklahoma Intrastate (part):				
Cleveland County	.....	Unclassifiable/Attainment		
Oklahoma County	.....	Unclassifiable/Attainment		
AQCR 184 Central Oklahoma Intrastate (remainder of).	.....	Unclassifiable/Attainment		
Canadian County				
Grady County				
Kingfisher County				
Lincoln County				
Logan County				
McClain County				
Pottawatomie County				
AQCR 185 North Central Oklahoma Intrastate	.....	Unclassifiable/Attainment		
Garfield County				
Grant County				
Kay County				
Noble County				
Payne County				
AQCR 186 Northeastern Oklahoma Intrastate	.....	Unclassifiable/Attainment		
Craig County				
Creek County				
Delaware County				
Mayes County				
Muskogee County				
Nowata County				
Okmulgee County				
Osage County				
Ottawa County				
Pawnee County				
Rogers County				
Tulsa County				
Wagoner County				
Washington County				
AQCR 187 Northwestern Oklahoma Intrastate	.....	Unclassifiable/Attainment		
Alfalfa County				
Beaver County				
Blaine County				
Cimarron County				
Custer County				
Dewey County				
Ellis County				
Harper County				
Major County				
Roger Mills County				
Texas County				
Woods County				
Woodward County				
AQCR 188 Southeastern Oklahoma Intrastate	.....	Unclassifiable/Attainment		
Atoka County				
Bryan County				
Carter County				
Choctaw County				
Coal County				
Garvin County				
Haskell County				
Hughes County				
Johnston County				
Latimer County				
Love County				
Marshall County				
McIntosh County				
Murray County				
Okfuskee County				
Pittsburg County				
Pontotoc County				

Oklahoma—Ozone (8-Hour Standard)

Designated area	Designation [a]		Category/classification	
	Date [1]	Type	Date [1]	Type
Pushmataha County				
Seminole County				
AQCR 189 Southwestern Oklahoma Intrastate	.....	Unclassifiable/Attainment		
Beckham County				
Caddo County				
Comanche County				
Cotton County				
Greer County				
Harmon County				
Jackson County				
Jefferson County				
Kiowa County				
Stephens County				
Tillman County				
Washita County				

[a] Includes Indian Country located in each county or area, except as otherwise specified.
[1] This date is June 15, 2004, unless otherwise noted.

Oklahoma—$PM_{2.5}$ (Annual NAAQS)

Designated area	Designation [a]	
	Date [1]	Type
AQCR 017 Metropolitan Fort Smith Interstate:		
Adair County	.....	Unclassifiable/Attainment.
Cherokee County	.....	Unclassifiable/Attainment.
Le Flore County	.....	Unclassifiable/Attainment.
Sequoyah County	.....	Unclassifiable/Attainment.
AQCR 022 Shreveport-Texarkana-Tyler Intrastate:		
McCurtain County	.....	Unclassifiable/Attainment.
AQCR 184 Central Oklahoma Intrastate (part):		
Cleveland County	.....	Unclassifiable/Attainment.
Oklahoma County	.....	Unclassifiable/Attainment.
AQCR 184 Central Oklahoma Intrastate (remainder of):		
Canadian County	.....	Unclassifiable/Attainment.
Grady County	.....	Unclassifiable/Attainment.
Kingfisher County	.....	Unclassifiable/Attainment.
Lincoln County	.....	Unclassifiable/Attainment.
Logan County	.....	Unclassifiable/Attainment.
McClain County	.....	Unclassifiable/Attainment.
Pottawatomie County	.....	Unclassifiable/Attainment.
AQCR 185 North Central Oklahoma Intrastate:		
Garfield County	.....	Unclassifiable/Attainment.
Grant County	.....	Unclassifiable/Attainment.
Kay County	.....	Unclassifiable/Attainment.
Noble County	.....	Unclassifiable/Attainment.
Payne County	.....	Unclassifiable/Attainment.
AQCR 186 Northeastern Oklahoma Intrastate:		
Craig County	.....	Unclassifiable/Attainment.
Creek County	.....	Unclassifiable/Attainment.
Delaware County	.....	Unclassifiable/Attainment.
Mayes County	.....	Unclassifiable/Attainment.
Muskogee County	.....	Unclassifiable/Attainment.
Nowata County	.....	Unclassifiable/Attainment.
Okmulgee County	.....	Unclassifiable/Attainment.
Osage County	.....	Unclassifiable/Attainment.
Ottawa County	.....	Unclassifiable/Attainment.
Pawnee County	.....	Unclassifiable/Attainment.
Rogers County	.....	Unclassifiable/Attainment.
Tulsa County	.....	Unclassifiable/Attainment.
Wagoner County	.....	Unclassifiable/Attainment.
Washington County	.....	Unclassifiable/Attainment.
AQCR 187 Northwestern Oklahoma Intrastate:		
Alfalfa County	.....	Unclassifiable/Attainment.
Beaver County	.....	Unclassifiable/Attainment.
Blaine County	.....	Unclassifiable/Attainment.
Cimarron County	.....	Unclassifiable/Attainment.
Custer County	.....	Unclassifiable/Attainment.
Dewey County	.....	Unclassifiable/Attainment.
Ellis County	.....	Unclassifiable/Attainment.

Oklahoma—$PM_{2.5}$ (Annual NAAQS)

Designated area	Designation [a]	
	Date [1]	Type
Harper County		Unclassifiable/Attainment.
Major County		Unclassifiable/Attainment.
Roger Mills County		Unclassifiable/Attainment.
Texas County		Unclassifiable/Attainment.
Woods County		Unclassifiable/Attainment.
Woodward County		Unclassifiable/Attainment.
AQCR 188 Southeastern Oklahoma Intrastate:		
Atoka County		Unclassifiable/Attainment.
Bryan County		Unclassifiable/Attainment.
Carter County		Unclassifiable/Attainment.
Choctaw County		Unclassifiable/Attainment.
Coal County		Unclassifiable/Attainment.
Garvin County		Unclassifiable/Attainment.
Haskell County		Unclassifiable/Attainment.
Hughes County		Unclassifiable/Attainment.
Johnston County		Unclassifiable/Attainment.
Latimer County		Unclassifiable/Attainment.
Love County		Unclassifiable/Attainment.
McIntosh County		Unclassifiable/Attainment.
Marshall County		Unclassifiable/Attainment.
Murray County		Unclassifiable/Attainment.
Okfuskee County		Unclassifiable/Attainment.
Pittsburg County		Unclassifiable/Attainment.
Pontotoc County		Unclassifiable/Attainment.
Pushmataha County		Unclassifiable/Attainment.
Seminole County		Unclassifiable/Attainment.
AQCR 189 Southwestern Oklahoma Intrastate:		
Beckham County		Unclassifiable/Attainment.
Caddo County		Unclassifiable/Attainment.
Comanche County		Unclassifiable/Attainment.
Cotton County		Unclassifiable/Attainment.
Greer County		Unclassifiable/Attainment.
Harmon County		Unclassifiable/Attainment.
Jackson County		Unclassifiable/Attainment.
Jefferson County		Unclassifiable/Attainment.
Kiowa County		Unclassifiable/Attainment.
Stephens County		Unclassifiable/Attainment.
Tillman County		Unclassifiable/Attainment.
Washita County		Unclassifiable/Attainment.

[a] Includes Indian Country located in each county or area, except as otherwise specified.
[1] This date is 90 days after January 5, 2005, unless otherwise noted.

Oklahoma—$PM_{2.5}$ [24-hour NAAQS]

Designated area	Designation for the 1997 NAAQS [a]		Designation for the 2006 NAAQS [a]	
	Date [1]	Type	Date [2]	Type
AQCR 017 Metropolitan Fort Smith Interstate:				
Adair County		Unclassifiable/Attainment		Unclassifiable/Attainment.
Cherokee County		Unclassifiable/Attainment		Unclassifiable/Attainment.
Le Flore County		Unclassifiable/Attainment		Unclassifiable/Attainment.
Sequoyah County		Unclassifiable/Attainment		Unclassifiable/Attainment.
AQCR 022 Shreveport-Texarkana-Tyler Intrastate:				
McCurtain County		Unclassifiable/Attainment		Unclassifiable/Attainment.
AQCR 184 Central Oklahoma Intrastate:				
Canadian County		Unclassifiable/Attainment		Unclassifiable/Attainment.
Cleveland County		Unclassifiable/Attainment		Unclassifiable/Attainment.
Grady County		Unclassifiable/Attainment		Unclassifiable/Attainment.
Kingfisher County		Unclassifiable/Attainment		Unclassifiable/Attainment.

Oklahoma—$PM_{2.5}$ [24-hour NAAQS]

Designated area	Designation for the 1997 NAAQS [a]		Designation for the 2006 NAAQS [a]	
	Date [1]	Type	Date [2]	Type
Lincoln County		Unclassifiable/Attainment		Unclassifiable/Attainment.
Logan County		Unclassifiable/Attainment		Unclassifiable/Attainment.
McClain County		Unclassifiable/Attainment		Unclassifiable/Attainment.
Oklahoma County		Unclassifiable/Attainment		Unclassifiable/Attainment.
Pottawatomie County		Unclassifiable/Attainment		Unclassifiable/Attainment.
AQCR 185 North Central Oklahoma Intrastate:				
Garfield County		Unclassifiable/Attainment		Unclassifiable/Attainment.
Grant County		Unclassifiable/Attainment		Unclassifiable/Attainment.
Kay County		Unclassifiable/Attainment		Unclassifiable/Attainment.
Noble County		Unclassifiable/Attainment		Unclassifiable/Attainment.
Payne County		Unclassifiable/Attainment		Unclassifiable/Attainment.
AQCR 186 Northeastern Oklahoma Intrastate:				
Craig County		Unclassifiable/Attainment		Unclassifiable/Attainment.
Creek County		Unclassifiable/Attainment		Unclassifiable/Attainment.
Delaware County		Unclassifiable/Attainment		Unclassifiable/Attainment.
Mayes County		Unclassifiable/Attainment		Unclassifiable/Attainment.
Muskogee County		Unclassifiable/Attainment		Unclassifiable/Attainment.
Nowata County		Unclassifiable/Attainment		Unclassifiable/Attainment.
Okmulgee County		Unclassifiable/Attainment		Unclassifiable/Attainment.
Osage County		Unclassifiable/Attainment		Unclassifiable/Attainment.
Ottawa County		Unclassifiable/Attainment		Unclassifiable/Attainment.
Pawnee County		Unclassifiable/Attainment		Unclassifiable/Attainment.
Rogers County		Unclassifiable/Attainment		Unclassifiable/Attainment.
Tulsa County		Unclassifiable/Attainment		Unclassifiable/Attainment.
Wagoner County		Unclassifiable/Attainment		Unclassifiable/Attainment.
Washington County		Unclassifiable/Attainment		Unclassifiable/Attainment.
AQCR 187 Northwestern Oklahoma Intrastate:				
Alfalfa County		Unclassifiable/Attainment		Unclassifiable/Attainment.
Beaver County		Unclassifiable/Attainment		Unclassifiable/Attainment.
Blaine County		Unclassifiable/Attainment		Unclassifiable/Attainment.
Cimarron County		Unclassifiable/Attainment		Unclassifiable/Attainment.
Custer County		Unclassifiable/Attainment		Unclassifiable/Attainment.
Dewey County		Unclassifiable/Attainment		Unclassifiable/Attainment.
Ellis County		Unclassifiable/Attainment		Unclassifiable/Attainment.
Harper County		Unclassifiable/Attainment		Unclassifiable/Attainment.

Oklahoma—$PM_{2.5}$ [24-hour NAAQS]

Designated area	Designation for the 1997 NAAQS [a]		Designation for the 2006 NAAQS [a]	
	Date [1]	Type	Date [2]	Type
Major County		Unclassifiable/Attainment		Unclassifiable/Attainment.
Roger Mills County		Unclassifiable/Attainment		Unclassifiable/Attainment.
Texas County		Unclassifiable/Attainment		Unclassifiable/Attainment.
Woods County		Unclassifiable/Attainment		Unclassifiable/Attainment.
Woodward County		Unclassifiable/Attainment		Unclassifiable/Attainment.
AQCR 188 Southeastern Oklahoma Intrastate:				
Atoka County		Unclassifiable/Attainment		Unclassifiable/Attainment.
Bryan County		Unclassifiable/Attainment		Unclassifiable/Attainment.
Carter County		Unclassifiable/Attainment		Unclassifiable/Attainment.
Choctaw County		Unclassifiable/Attainment		Unclassifiable/Attainment.
Coal County		Unclassifiable/Attainment		Unclassifiable/Attainment.
Garvin County		Unclassifiable/Attainment		Unclassifiable/Attainment.
Haskell County		Unclassifiable/Attainment		Unclassifiable/Attainment.
Hughes County		Unclassifiable/Attainment		Unclassifiable/Attainment.
Johnston County		Unclassifiable/Attainment		Unclassifiable/Attainment.
Latimer County		Unclassifiable/Attainment		Unclassifiable/Attainment.
Love County		Unclassifiable/Attainment		Unclassifiable/Attainment.
McIntosh County		Unclassifiable/Attainment		Unclassifiable/Attainment.
Marshall County		Unclassifiable/Attainment		Unclassifiable/Attainment.
Murray County		Unclassifiable/Attainment		Unclassifiable/Attainment.
Okfuskee County		Unclassifiable/Attainment		Unclassifiable/Attainment.
Pittsburg County		Unclassifiable/Attainment		Unclassifiable/Attainment.
Pontotoc County		Unclassifiable/Attainment		Unclassifiable/Attainment.
Pushmataha County		Unclassifiable/Attainment		Unclassifiable/Attainment.
Seminole County		Unclassifiable/Attainment		Unclassifiable/Attainment.
AQCR 189 Southwestern Oklahoma Intrastate:				
Beckham County		Unclassifiable/Attainment		Unclassifiable/Attainment.
Caddo County		Unclassifiable/Attainment		Unclassifiable/Attainment.
Comanche County		Unclassifiable/Attainment		Unclassifiable/Attainment.
Cotton County		Unclassifiable/Attainment		Unclassifiable/Attainment.
Greer County		Unclassifiable/Attainment		Unclassifiable/Attainment.
Harmon County		Unclassifiable/Attainment		Unclassifiable/Attainment.
Jackson County		Unclassifiable/Attainment		Unclassifiable/Attainment.
Jefferson County		Unclassifiable/Attainment		Unclassifiable/Attainment.
Kiowa County		Unclassifiable/Attainment		Unclassifiable/Attainment.

Oklahoma—$PM_{2.5}$ [24-hour NAAQS]

Designated area	Designation for the 1997 NAAQS [a]		Designation for the 2006 NAAQS [a]	
	Date [1]	Type	Date [2]	Type
Stephens County		Unclassifiable/Attainment		Unclassifiable/Attainment.
Tillman County		Unclassifiable/Attainment		Unclassifiable/Attainment.
Washita County		Unclassifiable/Attainment		Unclassifiable/Attainment.

[a] Includes Indian Country located in each county or area, except as otherwise specified.
[1] This date is 90 days after January 5, 2005, unless otherwise noted.
[2] This date is 30 days after November 13, 2009, unless otherwise noted.

Oklahoma—2008 Lead NAAQS

Designated area	Designation for the 2008 NAAQS[a]	
	Date[1]	Type
Whole State		Unclassifiable/Attainment.

[a] Includes Indian Country located in each county or area, except as otherwise specified.
[1] December 31, 2011 unless otherwise noted.

[43 FR 8964, Mar. 3, 1978, as amended at 43 FR 40431, Sept. 11, 1978; 45 FR 73930, Nov. 7, 1980; 46 FR 31014, June 12, 1981; 48 FR 2321, Jan. 19, 1983; 49 FR 27756, July 6, 1984; 51 FR 15323, Apr. 23, 1986; 56 FR 3782, Jan. 31, 1991; 56 FR 5656, Feb. 12, 1991; 56 FR 56815, Nov. 6, 1991; 63 FR 31073, June 5, 1998; 65 FR 45253, July 20, 2000; 69 FR 23928, Apr. 30, 2004; 70 FR 997, Jan. 5, 2005; 70 FR 44477, Aug. 3, 2005; 74 FR 58755, Nov. 13, 2009; 76 FR 72115, Nov. 22, 2011; 76 FR 76048, Dec. 6, 2011; 77 FR 9573, Feb. 17, 2012]

EFFECTIVE DATE NOTE: At 77 FR 30141, May 21, 2012, § 81.337 was amended by revising the table heading for ''Oklahoma—Ozone (8-Hour Standard)'' to read ''Oklahoma—1997 8-Hour Ozone NAAQS (Primary and Secondary)''; by adding a new table entitled ''Oklahoma—2008 8-Hour Ozone NAAQS (Primary and Secondary)'' following the newly designated table ''Oklahoma—1997 8-Hour Ozone NAAQS (Primary and Secondary)'', effective July 20, 2012. For the convenience of the user, the added text is set forth as follows:

§ 81.337 Oklahoma.

* * * * *

Oklahoma—2008 8-Hour Ozone NAAQS(Primary and secondary)

Designated area [1]	Designation		Classification	
	Date [2]	Type	Date [2]	Type
Adair County		Unclassifiable/Attainment		
Alfalfa County		Unclassifiable/Attainment		
Atoka County		Unclassifiable/Attainment		
Beaver County		Unclassifiable/Attainment		
Beckham County		Unclassifiable/Attainment		
Blaine County		Unclassifiable/Attainment		
Bryan County		Unclassifiable/Attainment		
Caddo County		Unclassifiable/Attainment		
Canadian County		Unclassifiable/Attainment		
Carter County		Unclassifiable/Attainment		
Cherokee County		Unclassifiable/Attainment		
Choctaw County		Unclassifiable/Attainment		
Cimarron County		Unclassifiable/Attainment		
Cleveland County		Unclassifiable/Attainment		
Coal County		Unclassifiable/Attainment		
Comanche County		Unclassifiable/Attainment		
Cotton County		Unclassifiable/Attainment		
Craig County		Unclassifiable/Attainment		
Creek County		Unclassifiable/Attainment		
Custer County		Unclassifiable/Attainment		
Delaware County		Unclassifiable/Attainment		
Dewey County		Unclassifiable/Attainment		
Ellis County		Unclassifiable/Attainment		
Garfield County		Unclassifiable/Attainment		
Garvin County		Unclassifiable/Attainment		
Grady County		Unclassifiable/Attainment		

Oklahoma—2008 8-Hour Ozone NAAQS(Primary and secondary)

Designated area [1]	Designation		Classification	
	Date [2]	Type	Date [2]	Type
Grant County		Unclassifiable/Attainment		
Greer County		Unclassifiable/Attainment		
Harmon County		Unclassifiable/Attainment		
Harper County		Unclassifiable/Attainment		
Haskell County		Unclassifiable/Attainment		
Hughes County		Unclassifiable/Attainment		
Jackson County		Unclassifiable/Attainment		
Jefferson County		Unclassifiable/Attainment		
Johnston County		Unclassifiable/Attainment		
Kay County		Unclassifiable/Attainment		
Kingfisher County		Unclassifiable/Attainment		
Kiowa County		Unclassifiable/Attainment		
Latimer County		Unclassifiable/Attainment		
Le Flore County		Unclassifiable/Attainment		
Lincoln County		Unclassifiable/Attainment		
Logan County		Unclassifiable/Attainment		
Love County		Unclassifiable/Attainment		
Major County		Unclassifiable/Attainment		
Marshall County		Unclassifiable/Attainment		
Mayes County		Unclassifiable/Attainment		
McClain County		Unclassifiable/Attainment		
McCurtain County		Unclassifiable/Attainment		
McIntosh County		Unclassifiable/Attainment		
Murray County		Unclassifiable/Attainment		
Muskogee County		Unclassifiable/Attainment		
Noble County		Unclassifiable/Attainment		
Nowata County		Unclassifiable/Attainment		
Okfuskee County		Unclassifiable/Attainment		
Oklahoma County		Unclassifiable/Attainment		
Okmulgee County		Unclassifiable/Attainment		
Osage County		Unclassifiable/Attainment		
Ottawa County		Unclassifiable/Attainment		
Pawnee County		Unclassifiable/Attainment		
Payne County		Unclassifiable/Attainment		
Pittsburg County		Unclassifiable/Attainment		
Pontotoc County		Unclassifiable/Attainment		
Pottawatomie County		Unclassifiable/Attainment		
Pushmataha County		Unclassifiable/Attainment		
Roger Mills County		Unclassifiable/Attainment		
Rogers County		Unclassifiable/Attainment		
Seminole County		Unclassifiable/Attainment		
Sequoyah County		Unclassifiable/Attainment		
Stephens County		Unclassifiable/Attainment		
Texas County		Unclassifiable/Attainment		
Tillman County		Unclassifiable/Attainment		
Tulsa County		Unclassifiable/Attainment		
Wagoner County		Unclassifiable/Attainment		
Washington County		Unclassifiable/Attainment		
Washita County		Unclassifiable/Attainment		
Woods County		Unclassifiable/Attainment		
Woodward County		Unclassifiable/Attainment		

[1] Includes any Indian country in each county or area, unless otherwise specified.
[2] This date is July 20, 2012, unless otherwise noted.

* * * * *

§ 81.338 Oregon.

Oregon—SO_2

Designated area	Does not meet primary standards	Does not meet secondary standards	Cannot be classified	Better than national standards
Central Oregon Intrastate AQCR 190				X
Eastern Oregon Intrastate AQCR 191				X
Northwest Oregon Intrastate AQCR 192				X
Portland Interstate AQCR 193 (Oregon Portion)				X
Southwest Oregon Intrastate AQCR 194				X

Oregon—Carbon Monoxide

Designated Area	Designation		Classification	
	Date [1]	Type	Date [1]	Type
Eugene-Springfield Area				
Lane County (part)	1/5/94	Attainment	1/5/94	
The Eugene-Springfield Area is described as: The area within the bounds beginning at the Northwest corner of T17S, R4W; extending South to the Southwest corner of Section 6, T17S, R4W; thence East to the Northwest corner of Section 8, T17S, R4W; thence South to the Southwest corner of Section 32, T17S, R4W; thence East to the Northeast corner of Section 4, T18S, R4W; thence South to the Southwest corner of Section 3, T18S, R4W; thence East to the Northwest corner Section 12, T18S, R4W; thence South to the Southwest corner of Section 13, T18S, R4W; thence East to the Northeast corner of Section 24, T18S, R4W; thence South to the Southeast corner of Section 24, T18S, R4W; thence East to the Northeast corner of Section 21, T18S, R3W; thence North to the Northeast corner of Section 21, T18S, R3W; thence East to the Northeast corner of Section 22, T18S, R3W; thence South to the Southwest corner of Section 23, T18S, R3W; thence East to the Southeast corner of Section 24, T18S, R3W; thence North to the Southeast corner of Section 1, T18S, R3W; thence East to the Southeast corner of Section 2, T18S, R2W; thence North to the Northeast corner of Section 26, T17S, R2W; thence West to the Southwest corner of Section 20, T17S, R2W; thence North to the Northwest corner of Section 20, T17S, R2W; thence West to the Southwest corner of Section 13, T17S, R3W; thence North to the Northwest corner of Section 13, T17S, R3W; thence West to the Southwest corner of Section 11, T17S, R3W; thence North to the Northwest corner of Section 11, T17S, R3W; thence West to the Southwest corner of Section 6, T17S, R3W; thence North to the Northwest corner of Section 31, T16S, R3W; thence West to the Northwest corner of Section 34, T16S, R4W; thence South to the Southwest corner of Section 34, T16S, R4W; thence West to the point of beginning.				
Grants Pass Area:				
Josephine County (part) Central Business District.	10/30/00	Attainment		
Klamath Falls Area				
Klamath County (part)	11/9/01	Attainment		
Urban Growth Boundary				
Medford Area				
Jackson County (part)	9/23/02	Attainment		
Medford Urban Growth Boundary				
Portland Area				
Portland Metro Service District Boundary				
Clackamas County (part)	.....	Attainment		
Multnomah County (part)	.....	Attainment		
Washington County (part)	.....	Attainment		
Salem Area:				
Salem Area Transportation Study				
Marion County (part)	3/2/09			
Polk County (part)	3/2/09			
AQCR 190 Remainder of Central Oregon Intrastate	.....	Unclassifiable/Attainment		

Oregon—Carbon Monoxide

Designated Area	Designation		Classification	
	Date [1]	Type	Date [1]	Type
Crook County				
Deschutes County				
Hood River County				
Jefferson County				
Klamath County (part)				
area outside Urban Growth Boundary				
Lake County				
Sherman County				
Wasco County				
AQCR 191 Eastern Oregon Intrastate	.....	Unclassifiable/Attainment		
Baker County				
Gilliam County				
Grant County				
Harney County				
Malheur County				
Morrow County				
Umatilla County				
Union County				
Wallowa County				
Wheeler County				
AQCR 192 Northwest Oregon Intrastate	.....	Unclassifiable/Attainment		
Clatsop County				
Lincoln County				
Tillamook County				
AQCR 193 Remainder of Portland Interstate	.....	Unclassifiable/Attainment		
Benton County				
Clackamas County (part)				
area outside Portland Metro Service District Boundary				
Columbia County				
Lane County (part)				
area outside of Air Quality Maintenance area				
Linn County				
Marion County (part)				
area outside the city of Salem				
Multnomah County (part)				
area outside Portand Metro Service District Boundary				
Polk County (part)				
area outside of Salem				
Washington County (part)				
area outside Portland Metro Service District Boundary				
Yamhill County				
AQCR 194 Remainder of Southwest Oregon	.....	Unclassifiable/Attainment		
Coos County				
Curry County				
Douglas County				
Jackson County (part)				
area outside Medford Urban growth boundary				
Josephine County (part)				
area outside of Central Business District				

[1] This date is November 15, 1990, unless otherwise noted.

Oregon—Ozone (1-Hour Standard)[3]

Designated area	Designation		Classification	
	Date [1]	Type	Date [1]	Type
Portland-Vancouver AQMA Area:	.....	Attainment		
Air Quality Maintenance Area				
Clackamas County (part)				
Multnomah County (part)				
Washington County (part)				
Salem Area:				
Salem Area Transportation Study				
Marion County (part)	([2])	Nonattainment	([2])	Incomplete Data.
Polk County	([2])	Nonattainment	([2])	Incomplete Data.

Oregon—Ozone (1-Hour Standard)[3]

Designated area	Designation		Classification	
	Date [1]	Type	Date [1]	Type
AQCR 190 Central Oregon Intrastate (Remainder of).	.....	Unclassifiable/Attainment		
Crook County				
Deschutes County				
Hood River County				
Jefferson County				
Klamath County				
Lake County				
Sherman County				
Wasco County				
AQCR 191 Eastern Oregon Intrastate	.....	Unclassifiable/Attainment		
Baker County				
Gilliam County				
Grant County				
Harney County				
Malheur County				
Morrow County				
Umatilla County				
Union County				
Wallowa County				
Wheeler County				
AQCR 192 Northwest Oregon Intrastate	.....	Unclassifiable/Attainment		
Clatsop County				
Lincoln County				
Tillamook County				
AQCR 193 Portland Interstate (part)	.....	Unclassifiable/Attainment		
Lane County (part) Eugene Springfield Air Quality Maintenance Area				
AQCR 193 Portland Interstate (Remainder of)	.....	Unclassifiable/Attainment		
Benton County				
Clackamas County (part) Remainder of county				
Columbia County				
Lane County (part) Remainder of county				
Linn County				
Marion County (part) area outside the Salem Area Transportation Study				
Multnomah County (part) Remainder of county				
Polk County (part) area outside the Salem Area Transportation Study				
Washington County (part) Remainder of county				
Yamhill County				
AQCR 194 Southwest Oregon Intrastate (part)				
Jackson County (part)				
Medford-Ashland Air Quality Maintenance Area.	.....	Unclassifiable/Attainment		
AQCR 194 Southwest Oregon Intrastate (Remainder of).	.....	Unclassifiable/Attainment		
Coos County				
Curry County				
Douglas County				
Jackson County (part) Remainder of county				
Josephine County				

[1] This date is October 18, 2000, unless otherwise noted.
[2] This date is January 16, 2001.
[3] The 1-hour ozone standard is revoked effective June 15, 2005 for all areas in Oregon. Portland-Vancouver AQMA is a maintenance area for the 1-hour NAAQS for purposes of 40 CFR part 51 subpart X.

Oregon—PM–10

Designated Area	Designation		Classification	
	Date	Type	Date	Type
Central Oregon Intrastate AQCR 190:				
Lakeview (the Urban Growth Boundary area)	7/19/06	Attainment		
Klamath Falls (the Urban Growth Boundary area).	12/22/03	Attainment		
Remainder of AQCR 190	11/15/90	Unclassifiable		
Eastern Oregon Intrastate AQCR 191:				

Oregon—PM–10

Designated Area	Designation		Classification	
	Date	Type	Date	Type
La Grande (the Urban Growth Boundary area)	7/19/06	Attainment		
Remainder of AQCR 191	11/15/90	Unclassifiable		
Northwest Oregon Intrastate AQCR 192	11/15/90	Unclassifiable		
Portland Interstate AQCR 193 (Oregon Portion):				
Portland-Vancouver (portion of the Air Quality Maintenance Area).	11/15/90	Unclassifiable		
Eugene/Springfield (the Urban Growth Boundary area).	11/15/90	Nonattainment	11/15/90	Moderate.
Oakridge (the Urban Growth Boundary area)	1/20/94	Nonattainment	1/20/94	Moderate.
Remainder of AQCR 193 (Oregon Portion)	11/15/90	Unclassifiable		
Southwest Oregon Intrastate AQCR 194:				
Medford Air Quality Maintenance Area (including White City).	8/18/06	Attainment		
Grants Pass (the Urban Growth Boundary area)	12/26/03	Attainment		
Remainder of AQCR 194	11/15/90	Unclassifiable		

Oregon—NO_2 (1971 Annual Standard)

Designated area	Does not meet primary standards	Cannot be classified or better than national standards
Central Oregon Intrastate AQCR 190		X
Eastern Oregon Intrastate AQCR 191		X
Northwest Oregon Intrastate AQCR 192		X
Portland Interstate AQCR 193 (Oregon Portion)		X
Southwest Oregon Intrastate AQCR 194		X

Oregon—NO_2 (2010 1-Hour Standard)

Designated area	Designation [a]	
	Date [1]	Type
Baker County		Unclassifiable/Attainment.
Benton County		Unclassifiable/Attainment.
Clackamas County		Unclassifiable/Attainment.
Clatsop County		Unclassifiable/Attainment.
Columbia County		Unclassifiable/Attainment.
Coos County		Unclassifiable/Attainment.
Crook County		Unclassifiable/Attainment.
Curry County		Unclassifiable/Attainment.
Deschutes County		Unclassifiable/Attainment.
Douglas County		Unclassifiable/Attainment.
Gilliam County		Unclassifiable/Attainment.
Grant County		Unclassifiable/Attainment.
Harney County		Unclassifiable/Attainment.
Hood River County		Unclassifiable/Attainment.
Jackson County		Unclassifiable/Attainment.
Jefferson County		Unclassifiable/Attainment.
Josephine County		Unclassifiable/Attainment.
Klamath County		Unclassifiable/Attainment.
Lake County		Unclassifiable/Attainment.
Lane County		Unclassifiable/Attainment.
Lincoln County		Unclassifiable/Attainment.
Linn County		Unclassifiable/Attainment.
Malheur County		Unclassifiable/Attainment.
Marion County		Unclassifiable/Attainment.
Morrow County		Unclassifiable/Attainment.
Multnomah County		Unclassifiable/Attainment.
Polk County		Unclassifiable/Attainment.
Sherman County		Unclassifiable/Attainment.
Tillamook County		Unclassifiable/Attainment.
Umatilla County		Unclassifiable/Attainment.
Union County		Unclassifiable/Attainment.
Wallowa County		Unclassifiable/Attainment.
Wasco County		Unclassifiable/Attainment.
Washington County		Unclassifiable/Attainment.
Wheeler County		Unclassifiable/Attainment.
Yamhill County		Unclassifiable/Attainment.

[a] Includes Indian Country located in each county or area, except as otherwise specified.

[1] This date is 90 days after October 31, 2011, unless otherwise noted.

Oregon—Ozone (8-Hour Standard)

Designated area	Designation area [a]		Category/classification	
	Date [1]	Type	Date [1]	Type
Portland-Vancouver AQMA: (Air Quality Maintenance Area).		Unclassifiable/Attainment		
Clackamas County (part)				
Multnomah County (part)				
Washington County (part)				
Salem Area: (Salem Area Transportation Study)				
Marion County (part)		Unclassifiable/Attainment		
Polk County		Unclassifiable/Attainment		
AQCR 190 Central Oregon Intrastate (remainder of).		Unclassifiable/Attainment		
Crook County				
Deschutes County				
Hood River County				
Jefferson County				
Klamath County				
Lake County				
Sherman County				
Wasco County				
AQCR 191 Eastern Oregon Intrastate		Unclassifiable/Attainment		
Baker County				
Gilliam County				
Grant County				
Harney County				
Malheur County				
Morrow County				
Umatilla County				
Union County				
Wallowa County				
Wheeler County				
AQCR 192 Northwest Oregon Intrastate		Unclassifiable/Attainment		
Clatsop County				
Lincoln County				
Tillamook County				
AQCR 193 Portland Interstate (part)		Unclassifiable/Attainment		
Lane County (part) Eugene Springfield Air Quality Maintenance Area				
AQCR 193 Portland Interstate (remainder of)		Unclassifiable/Attainment		
Benton County				
Clackamas County (part) remainder				
Columbia County				
Lane County (part) remainder				
Linn County				
Marion County (part) The area outside the Salem Area Transportation Study				
Multnomah County (part) remainder				
Polk County (part) The area outside the Salem Area Transportation Study				
Washington County (part) remainder				
Yamhill County				
AQCR 194 Southwest Oregon Intrastate (part)				
Jackson County (part) Medford-Ashland Air Quality Maintenance Area.		Unclassifiable/Attainment		
AQCR 194 Southwest Oregon Intrastate (remainder of).		Unclassifiable/Attainment		
Coos County				
Curry County				
Douglas County				
Jackson County (part) remainder				
Josephine County				

[a] Includes Indian Country located in each county or area, except as otherwise specified.
[1] This date is June 15, 2004, unless otherwise noted.

Oregon—$PM_{2.5}$ (Annual NAAQS)

Designated area	Designation [a]	
	Date [1]	Type
Portland-Vancouver AQMA: (Air Quality Maintenance Area)		

Oregon—$PM_{2.5}$ (Annual NAAQS)

Designated area	Designation [a]	
	Date [1]	Type
Clackamas County (part)		Unclassifiable/Attainment.
Multnomah County (part)		Unclassifiable/Attainment.
Washington County (part)		Unclassifiable/Attainment.
Salem Area:		
(Salem Area Transportation Study):		
Marion County (part)		Unclassifiable/Attainment.
Polk County		Unclassifiable/Attainment.
AQCR 190 Central Oregon Intrastate (remainder of):		
Crook County		Unclassifiable/Attainment.
Deschutes County		Unclassifiable/Attainment.
Hood River County		Unclassifiable/Attainment.
Jefferson County		Unclassifiable/Attainment.
Klamath County		Unclassifiable/Attainment.
Lake County		Unclassifiable/Attainment.
Sherman County		Unclassifiable/Attainment.
Wasco County		Unclassifiable/Attainment.
AQCR 191 Eastern Oregon Intrastate:		
Baker County		Unclassifiable/Attainment.
Gilliam County		Unclassifiable/Attainment.
Grant County		Unclassifiable/Attainment.
Harney County		Unclassifiable/Attainment.
Malheur County		Unclassifiable/Attainment.
Morrow County		Unclassifiable/Attainment.
Umatilla County		Unclassifiable/Attainment.
Union County		Unclassifiable/Attainment.
Wallowa County		Unclassifiable/Attainment.
Wheeler County		Unclassifiable/Attainment.
AQCR 192 Northwest Oregon Intrastate:		
Clatsop County		Unclassifiable/Attainment.
Lincoln County		Unclassifiable/Attainment.
Tillamook County		Unclassifiable/Attainment.
AQCR 193 Portland Interstate (part):		
Lane County (part)		Unclassifiable/Attainment.
Eugene Springfield Air Quality Maintenance Area		
AQCR 193 Portland Interstate (remainder of):		
Benton County		Unclassifiable/Attainment.
Clackamas County (remainder)		Unclassifiable/Attainment.
Columbia County		Unclassifiable/Attainment.
Lane County (remainder)		Unclassifiable/Attainment.
Linn County		Unclassifiable/Attainment.
Marion County (part)		Unclassifiable/Attainment.
The area outside the Salem Area Transportation Study		
Multnomah County (remainder)		Unclassifiable/Attainment.
Polk County (part)		Unclassifiable/Attainment.
The area outside the Salem Area Transportation Study		
Washington County (remainder)		Unclassifiable/Attainment.
Yamhill County		Unclassifiable/Attainment.
AQCR 194 Southwest Oregon Intrastate (part):		
Jackson County (part)		Unclassifiable/Attainment.
Medford-Ashland Air Quality Maintenance Area		
AQCR 194 Southwest Oregon Intrastate (remainder of):		
Coos County		Unclassifiable/Attainment.
Curry County		Unclassifiable/Attainment.
Douglas County		Unclassifiable/Attainment.
Jackson County (remainder)		Unclassifiable/Attainment.
Josephine County		Unclassifiable/Attainment.

[a] Includes Indian Country located in each county or area, except as otherwise specified.
[1] This date is 90 days after January 5, 2005, unless otherwise noted.

Oregon—$PM_{2.5}$ [24-hour NAAQS]

Designated area	Designation for the 1997 NAAQS [a]		Designation for the 2006 NAAQS [a]	
	Date [1]	Type	Date [2]	Type
Klamath Falls, OR:				
Klamath County (part)		Unclassifiable/Attainment		Nonattainment.

Oregon—$PM_{2.5}$ [24-hour NAAQS]

Designated area	Designation for the 1997 NAAQS [a]		Designation for the 2006 NAAQS [a]	
	Date [1]	Type	Date [2]	Type
Townships and ranges defined by T37S R9E Sections 31–32. T38S R8E Sections 1–5, 8–16, 22–26, 35–36. T38S R9E Sections 5–8, 14–15, 17–36. T39S R8E Sections 1–2, 11–13, 24. T39S R9E Sections 1–27. T39S R10E Sections 3–10, 15–20, 29–30.				
Oakridge, OR:				
Lane County (part)		Unclassifiable/Attainment		Nonattainment.
Boundary is defined as a line from Township 21 South, Range 2 East, Section 11 (northwest corner) east to Township 21 South, Range 3 East, Section 11 (northeast corner), south to Township 21 South, Range 3 East, Section 23 (southeast corner), west to Township 21 South, Range 2 East, Section 23 (southwest corner) connecting back to Township 21 South, Range 2 East, Section 11 (northwest corner).				
Rest of State:				
Portland-Vancouver AQMA: (Air Quality Maintenance Area)				
Clackamas County (part)		Unclassifiable/Attainment		Unclassifiable/Attainment.
Multnomah County (part)		Unclassifiable/Attainment		Unclassifiable/Attainment.
Washington County (part)		Unclassifiable/Attainment		Unclassifiable/Attainment.
Salem Area: (Salem Area Transportation Study):				
Marion County (part)		Unclassifiable/Attainment		Unclassifiable/Attainment.
Polk County		Unclassifiable/Attainment		Unclassifiable/Attainment.
AQCR 190 Central Oregon Intrastate:				
Crook County		Unclassifiable/Attainment		Unclassifiable/Attainment.
Deschutes County		Unclassifiable/Attainment		Unclassifiable/Attainment.
Hood River County		Unclassifiable/Attainment		Unclassifiable/Attainment.
Jefferson County		Unclassifiable/Attainment		Unclassifiable/Attainment.
Klamath County (remainder)		Unclassifiable/Attainment		Unclassifiable/Attainment.
Lake County		Unclassifiable/Attainment		Unclassifiable/Attainment.
Sherman County		Unclassifiable/Attainment		Unclassifiable/Attainment.
Wasco County		Unclassifiable/Attainment		Unclassifiable/Attainment.
AQCR 191 Eastern Oregon Intrastate:				
Baker County		Unclassifiable/Attainment		Unclassifiable/Attainment.
Gilliam County		Unclassifiable/Attainment		Unclassifiable/Attainment.

Oregon—$PM_{2.5}$ [24-hour NAAQS]

Designated area	Designation for the 1997 NAAQS [a]		Designation for the 2006 NAAQS [a]	
	Date [1]	Type	Date [2]	Type
Grant County		Unclassifiable/Attainment		Unclassifiable/Attainment.
Harney County		Unclassifiable/Attainment		Unclassifiable/Attainment.
Malheur County		Unclassifiable/Attainment		Unclassifiable/Attainment.
Morrow County		Unclassifiable/Attainment		Unclassifiable/Attainment.
Umatilla County		Unclassifiable/Attainment		Unclassifiable/Attainment.
Union County		Unclassifiable/Attainment		Unclassifiable/Attainment.
Wallowa County		Unclassifiable/Attainment		Unclassifiable/Attainment.
Wheeler County		Unclassifiable/Attainment		Unclassifiable/Attainment.
AQCR 192 Northwest Oregon Intrastate:				
Clatsop County		Unclassifiable/Attainment		Unclassifiable/Attainment.
Lincoln County		Unclassifiable/Attainment		Unclassifiable/Attainment.
Tillamook County		Unclassifiable/Attainment		Unclassifiable/Attainment.
AQCR 193 Portland Interstate (part):				
Lane County (part)		Unclassifiable/Attainment		Unclassifiable/Attainment.
Eugene Springfield Air Quality Maintenance AQCR 193 Portland Interstate:				
Benton County		Unclassifiable/Attainment		Unclassifiable/Attainment.
Clackamas County (remainder)		Unclassifiable/Attainment		Unclassifiable/Attainment.
Columbia County		Unclassifiable/Attainment		Unclassifiable/Attainment.
Lane County (remainder)		Unclassifiable/Attainment		Unclassifiable/Attainment.
Linn County		Unclassifiable/Attainment		Unclassifiable/Attainment.
Marion County (part)		Unclassifiable/Attainment		Unclassifiable/Attainment.
The area outside the Salem Area Transportation Study				
Multnomah County (remainder)		Unclassifiable/Attainment		Unclassifiable/Attainment.
Polk County (part)		Unclassifiable/Attainment		Unclassifiable/Attainment.
The area outside the Salem Area Transportation Study				
Washington County (remainder)		Unclassifiable/Attainment		Unclassifiable/Attainment.
Yamhill County		Unclassifiable/Attainment		Unclassifiable/Attainment.
AQCR 194 Southwest Oregon Intrastate (part):				
Jackson County (part)		Unclassifiable/Attainment		Unclassifiable/Attainment.
Medford-Ashland Air Quality Maintenance Area AQCR 194 Southwest Oregon Intrastate: (remainder of):				
Coos County		Unclassifiable/Attainment		Unclassifiable/Attainment.
Curry County		Unclassifiable/Attainment		Unclassifiable/Attainment.
Douglas County		Unclassifiable/Attainment		Unclassifiable/Attainment.
Jackson County (remainder)		Unclassifiable/Attainment		Unclassifiable/Attainment.
Josephine County		Unclassifiable/Attainment		Unclassifiable/Attainment.

[a] Includes Indian Country located in each county or area, except as otherwise specified.

[1] This date is 90 days after January 5, 2005, unless otherwise noted.
[2] This date is 30 days after November 13, 2009, unless otherwise noted.

Oregon—2008 Lead NAAQS

Designated area	Designation for the 2008 NAAQS[a]	
	Date [1]	Type
Whole State		Unclassifiable/Attainment.

[a] Includes Indian Country located in each county or area, except as otherwise specified.
[1] December 31, 2011 unless otherwise noted.

[54 FR 27345, June 29, 1989]

EDITORIAL NOTE: For FEDERAL REGISTER citations affecting § 81.338 see the List of CFR Sections Affected, which appears in the Finding Aids section of the printed volume and at *www.fdsys.gov*.

EFFECTIVE DATE NOTE: At 77 FR 30142, May 21, 2012, § 81.338 was amended by revising the table heading for ''Oregon—Ozone (8-Hour Standard)'' to read ''Oregon—1997 8-Hour Ozone NAAQS (Primary and Secondary)''; by adding a new table entitled ''Oregon—2008 8-Hour Ozone NAAQS (Primary and Secondary)'' following the newly designated table ''Oregon—1997 8-Hour Ozone NAAQS (Primary and Secondary)'', effective July 20, 2012. For the convenience of the user, the added text is set forth as follows:

§ 81.338 Oregon.

* * * * *

Oregon—2008 8-Hour Ozone NAAQS (Primary and secondary)

Designated area	Designation		Classification	
	Date [1]	Type	Date [1]	Type
Statewide and Any Areas of Indian Country		Unclassifiable/Attainment		

[1] This date is July 20, 2012, unless otherwise noted.

* * * * *

§ 81.339 Pennsylvania.

Pennsylvania—TSP

Designated area	Does not meet primary standards	Does not meet secondary standards	Cannot be classified	Better than national standards
I. Metropolitan Philadelphia Interstate AQCR:				
(A) City of Philadelphia:				
Census tracts 1–12, 125–142, 144–157, 162–177, 190–205, 293, 294, 298–302, 315–321, 323, 325, 326, 329–332		X		
Census tracts 13–75, 143, 158–161, 178–189, 295–297, 322, 324, 327			X	
Balance of city				X
(B) Montgomery County:				
Conshohocken Boro				X
Pottstown Boro		X		
West Pottsgrove Township			X	
Upper Pottsgrove Township			X	
(C) Chester County:				
South Coatesville Boro		X		
City of Coatesville			X	
(D) Bucks County: Doylestown Township			X	
(E) Remaining Pennsylvania Portions of AQCR				X
II. Northeast Pennsylvania Interstate AQCR:				
(A) Scranton, W-B Air Basin:				
Lackawanna County: Throop Boro				X
Luzerne County: City of Wilkes-Barre				X
(B) A-B-E Air Basin:				
Lehigh County:				
Coplay Boro	X			
Whitehall Township	X			

Pennsylvania—TSP

Designated area	Does not meet primary standards	Does not meet secondary standards	Cannot be classified	Better than national standards
Northampton County:				
Northampton Boro	X			
Allen Township	X			
(C) Reading Air Basin				X
(D) Carbon County				X
(E) Remaining Portions of AQCR				X
III. South Central Pennsylvania Intrastate AQCR:				
(A) Harrisburg Air Basin				X
(B) Lancaster Air Basin:				
Lancaster County:				
City of Lancaster		X		
Manheim Township		X		
(C) York Air Basin:				
York County:				
City of York				X
West York Boro		X		
West Manchester Township		X		
(D) Remaining Portions of AQCR				X
IV. Central Pennsylvania Intrastate AQCR:				
(A) Johnstown Air Basin: Cambria County:				
City of Johnstown				X
Dale Boro				X
East Conemaugh Boro				X
Franklin Boro				X
East Taylor Twp				X
Middle Taylor Twp				X
West Taylor Twp				X
(B) Blair County:				
City of Altoona		X		
Allegheny Township			X	
Logan Township			X	
(C) Remaining Portions of AQCR				X
(D) Remaining Portions of AQCR				X
V. Southwest Pennsylvania Intrastate AQCR:				
(A) Monongahela Valley Air Basin:				
Fayette County				X
Washington County				X
Westmoreland County:				
City of Monessen	X			
Rostraver Township	X			
(B) Allegheny County Air Basin:				
(1) A three mile wide strip which is within a perpendicular distance two miles north and east and one mile south and west of the river center line with terminus points as follows:				
(a) The Beaver County line to the I–79 Bridge on the Ohio River				X
(b) I–79 to the McKees Rocks Bridge on the Ohio River				X
(c) McKees Rocks Bridge to the Birmingham Bridge on the Ohio and Monongahela Rivers		X		
(d) Birmingham Bridge to the Glenwood Bridge on the Monongahela River	X			
(e) Glenwood Bridge to the Mansfield Bridge (Dravosburg) on the Monongahela River	X			
(f) Mansfield Bridge to the Westmoreland County line on the Monongahela River	X			
(2) The area within a half-mile radius of the Greater Pittsburgh Airport monitor		X		
(3) The one mile wide strip centered on Turtle Creek running from area (V)(B)(1)(e) above to the Westmoreland County line	X			
(4) The Area #9 within Allegheny County within a radius of 2 miles of the Springdale Monitor				X

Pennsylvania—TSP

Designated area	Does not meet primary standards	Does not meet secondary standards	Cannot be classified	Better than national standards
(5) The remaining portions of the Allegheny County Air Basin				X
(C) Lower Beaver Valley Air Basin:				
(1) Aliquippa Boro	X			
(2) Baden Boro	X			
(3) Midland Boro	X			
(4) Remaining Portions		X		
(D) Westmoreland County				X
(E) Remaining Portions of AQCR				X
VI. Northwest Penna. Interstate AQCR:				
(A) Upper Beaver Valley Air Basin:				
(1) Ellwood City Boro	X			
(2) City of New Castle	X			
(3) Remaining Portions		X		
(B) Erie Air Basin:				
City of Erie		X		
Wesleyville Boro		X		
Lawrence Park Township		X		
(C) Mercer County:				
City of Sharon	X			
City of Farrell	X			
Sharpsville Boro			X	
Wheatland Boro			X	
Hickory Township			X	
(D) Remaining Portions of AQCR				X

Pennsylvania—SO_2

Designated area	Does not meet primary standards	Does not meet secondary standards	Cannot be classified	Better than national standards
I. Metropolitan Philadelphia Interstate AQCR:				
(A) City of Philadelphia				X
(B) Delaware County				X
(C) Remaining Pennsylvania Portion of AQCR				X
II. Northeast Pennsylvania Intrastate AQCR				X
III. South Central Pennsylvania Intrastate AQCR				X
IV. Central Pennsylvania Intrastate AQCR:				X
V. Southwest Pennsylvania Intrastate AQCR:.				
(A) Monongahela Valley Air Basin			X	
(B) Allegheny County Air Basin:.				
(1) The areas within a two-mile radius of the Hazelwood monitor				X
(2) That portion of Allegheny County within an eight-mile radius of the Duquesne Golf Association Club House in West Mifflin excluding the nonattainment area (#1)				X
(3) The area within a two-mile radius of the Bellevue monitor			X	
(4) The remaining portions of the Allegheny County Air Basin				X
(C) Beaver Valley Air Basin (Beaver County)				X
(D) Armstrong County:.				
Madison Twp	X			
Mahoning Twp	X			
Boggs Twp	X			
Washington Twp	X			
Pine Twp	X			
(E) Remainder of AQCR				X
VI. Northwest Pennsylvania Intrastate AQCR:.				
(A) Warren County:.				
Conewango Twp				X
Mead Twp				X
Clarendon Boro				X
Warren Boro				X
Pleasant Township				X
Glade Township				X
(B) Beaver Valley Air Basin (Lawrence County)			X	

Pennsylvania—SO_2

Designated area	Does not meet primary standards	Does not meet secondary standards	Cannot be classified	Better than national standards
(C) Remaining Pennsylvania Portion of the AQCR	.....	.....	.....	X

Pennsylvania—Carbon Monoxide

Designated Area	Designation		Classification	
	Date [1]	Type	Date [1]	Type
Philadelphia-Camden County Area				
Philadelphia County (part)				
City of Philadelphia—high traffic areas within the Central Business District and certain other high traffic density areas.	3/15/96	Attainment		
Pittsburgh Area				
Allegheny County (part)				
high traffic density areas within the Central Business District and certain other high traffic density areas.	1/13/03	Attainment		
Rest of State	.....	Unclassifiable/Attainment		
Adams County				
Allegheny County (part)				
Remainder of Allegheny County				
Armstrong County				
Beaver County				
Bedford County				
Berks County				
Blair County				
Bradford County				
Bucks County				
Butler County				
Cambria County				
Cameron County				
Carbon County				
Centre County				
Chester County				
Clarion County				
Clearfield County				
Clinton County				
Columbia County				
Crawford County				
Cumberland County				
Dauphin County				
Delaware County				
Elk County				
Erie County				
Fayette County				
Forest County				
Franklin County				
Fulton County				
Greene County				
Huntingdon County				
Indiana County				
Jefferson County				
Juniata County				
Lackawanna County				
Lancaster County				
Lawrence County				
Lebanon County				
Lehigh County				
Luzerne County				
Lycoming County				
McKean County				
Mercer County				
Mifflin County				
Monroe County				
Montgomery County				
Montour County				
Northampton County				
Northumberland County				
Perry County				

Pennsylvania—Carbon Monoxide

Designated Area	Designation		Classification	
	Date [1]	Type	Date [1]	Type
Philadelphia County (part)				
Remainder of Philadelphia county				
Pike County				
Potter County				
Schuylkill County				
Snyder County				
Somerset County				
Sullivan County				
Susquehanna County				
Tioga County				
Union County				
Venango County				
Warren County				
Washington County				
Wayne County				
Westmoreland County				
Wyoming County				
York County				

[1] This date is November 15, 1990, unless otherwise noted.

Pennsylvania—Ozone (1-Hour Standard)[4]

Designated area	Designation		Classification	
	Date [1]	Type	Date [1]	Type
Allentown-Bethlehem-Easton Area:				
Carbon County	(3)	Nonattainment	(3)	Marginal.
Lehigh County	(3)	Nonattainment	(3)	Marginal.
Northampton County	(3)	Nonattainment	(3)	Marginal.
Altoona Area:				
Blair County	(3)	Nonattainment	(3)	Marginal.
Crawford County Area:				
Crawford County	(3)	Nonattainment	(3)	Incomplete Data.
Erie Area:				
Erie County	(3)	Nonattainment	(3)	Marginal.
Franklin County Area:				
Franklin County	(3)	Nonattainment	(3)	Incomplete Data.
Greene County Area:				
Greene County	(3)	Nonattainment	(3)	Incomplete Data.
Harrisburg-Lebanon-Carlisle Area:				
Cumberland County	(3)	Nonattainment	(3)	Marginal.
Dauphin County	(3)	Nonattainment	(3)	Marginal.
Lebanon County	(3)	Nonattainment	(3)	Marginal.
Perry County	(3)	Nonattainment	(3)	Marginal.
Johnstown Area:				
Cambria County	(3)	Nonattainment	(3)	Marginal.
Somerset County	(3)	Nonattainment	(3)	Marginal.
Juniata County Area:				
Juniata County	(3)	Nonattainment	(3)	Incomplete Data.
Lancaster Area:				
Lancaster County	11/15/90	Nonattainment	11/15/90	Marginal.
Lawrence County Area:				
Lawrence County	(3)	Nonattainment	(3)	Incomplete Data.
Northumberland County Area:				
Northumberland County	(3)	Nonattainment	(3)	Incomplete Data.
Philadelphia-Wilmington-Trenton Area:				
Bucks County	11/15/90	Nonattainment	11/15/90	Severe-15.
Chester County	11/15/90	Nonattainment	11/15/90	Severe-15.
Delaware County	11/15/90	Nonattainment	11/15/90	Severe-15.
Montgomery County	11/15/90	Nonattainment	11/15/90	Severe-15.
Philadelphia County	11/15/90	Nonattainment	11/15/90	Severe-15.
Pike County Area:				
Pike County	(3)	Nonattainment	(3)	Incomplete Data.
Pittsburgh-Beaver Valley Area:				
Allegheny County	10/19/01	Attainment		
Armstrong County	10/19/01	Attainment		
Beaver County	10/19/01	Attainment		
Butler County	10/19/01	Attainment		
Fayette County	10/19/01	Attainment		
Washington County	10/19/01	Attainment		

Pennsylvania—Ozone (1-Hour Standard)[4]

Designated area	Designation		Classification	
	Date [1]	Type	Date [1]	Type
Westmoreland County	10/19/01	Attainment		
Reading Area:				
Berks County	.....	Unclassifiable/Attainment		
Schuylkill County Area:				
Schuylkill County	(3)	Nonattainment	(3)	Incomplete Data.
Scranton-Wilkes-Barre Area:				
Columbia County	(3)	Nonattainment	(3)	Marginal.
Lackawanna County	(3)	Nonattainment	(3)	Marginal.
Luzerne County	(3)	Nonattainment	(3)	Marginal.
Monroe County	(3)	Nonattainment	(3)	Marginal.
Wyoming County	(3)	Nonattainment	(3)	Marginal.
Snyder County Area:				
Snyder County	(3)	Nonattainment	(3)	Incomplete Data.
Susquehanna County Area:				
Susquehanna County	(3)	Nonattainment	(3)	Incomplete Data.
Warren County Area:				
Warren County	(3)	Nonattainment	(3)	Incomplete Data.
Wayne County Area:				
Wayne County	(3)	Nonattainment	(3)	Incomplete Data.
York Area:				
Adams County	(3)	Nonattainment	(3)	Marginal.
York County	(3)	Nonattainment	(3)	Marginal.
Youngstown-Warren-Sharon Area:				
Mercer County	(3)	Nonattainment	(3)	Marginal.
AQCR 151 NE Pennsylvania Intrastate (Remainder of):				
Bradford County	.....	Unclassifiable/Attainment		
Sullivan County	.....	Unclassifiable/Attainment		
Tioga County	.....	Unclassifiable/Attainment		
AQCR 178 NW Pennsylvania Interstate (Remainder of):				
Cameron County	.....	Unclassifiable/Attainment		
Clarion County	.....	Unclassifiable/Attainment		
Clearfield County	.....	Unclassifiable/Attainment		
Elk County	.....	Unclassifiable/Attainment		
Forest County	.....	Unclassifiable/Attainment		
Jefferson County	.....	Unclassifiable/Attainment		
McKean County	.....	Unclassifiable/Attainment		
Potter County	.....	Unclassifiable/Attainment		
Venango County	.....	Unclassifiable/Attainment		
AQCR 195 Central Pennsylvania Intrastate (Remainder of):				
Bedford County	.....	Unclassifiable/Attainment		
Centre County	.....	Unclassifiable/Attainment		
Clinton County	.....	Unclassifiable/Attainment		
Fulton County	.....	Unclassifiable/Attainment		
Huntingdon County	.....	Unclassifiable/Attainment		
Lycoming County	.....	Unclassifiable/Attainment		
Mifflin County	.....	Unclassifiable/Attainment		
Montour County	.....	Unclassifiable/Attainment		
Union County	.....	Unclassifiable/Attainment		
AQCR 197 SW Pennsylvania Intrastate (Remainder of):				
Indiana County	.....	Unclassifiable/Attainment		

[1] This date is October 18, 2000, unless otherwise noted.
[2] Attainment date extended to 11/15/97.
[3] This date is January 16, 2001.
[4] The 1-hour ozone standard is revoked effective June 15, 2005 for all areas in Pennsylvania. The Pittsburgh-Beaver Valley and Reading areas are maintenance areas for the 1-hour NAAQS for purposes of 40 CFR part 51 subpart X.

Pennsylvania—PM–10

Designated Area	Designation		Classification	
	Date	Type	Date	Type
Allegheny County				
The area including Liberty, Lincoln, Port Vue, and Glassport Boroughs and the City of Clairton.	10/14/03	Attainment	.....	
Rest of State	11/15/90	Unclassifiable		

Pennsylvania—NO_2 (1971 Annual Standard)

Designated area	Does not meet primary standards	Cannot be classified or better than national standards
Entire State		X

Pennsylvania—NO_2 (2010 1-Hour Standard)

Designated area	Designation [a]	
	Date [1]	Type
Adams County		Unclassifiable/Attainment.
Allegheny County		Unclassifiable/Attainment.
Armstrong County		Unclassifiable/Attainment.
Beaver County		Unclassifiable/Attainment.
Bedford County		Unclassifiable/Attainment.
Berks County		Unclassifiable/Attainment.
Blair County		Unclassifiable/Attainment.
Bradford County		Unclassifiable/Attainment.
Bucks County		Unclassifiable/Attainment.
Butler County		Unclassifiable/Attainment.
Cambria County		Unclassifiable/Attainment.
Cameron County		Unclassifiable/Attainment.
Carbon County		Unclassifiable/Attainment.
Centre County		Unclassifiable/Attainment.
Chester County		Unclassifiable/Attainment.
Clarion County		Unclassifiable/Attainment.
Clearfield County		Unclassifiable/Attainment.
Clinton County		Unclassifiable/Attainment.
Columbia County		Unclassifiable/Attainment.
Crawford County		Unclassifiable/Attainment.
Cumberland County		Unclassifiable/Attainment.
Dauphin County		Unclassifiable/Attainment.
Delaware County		Unclassifiable/Attainment.
Elk County		Unclassifiable/Attainment.
Erie County		Unclassifiable/Attainment.
Fayette County		Unclassifiable/Attainment.
Forest County		Unclassifiable/Attainment.
Franklin County		Unclassifiable/Attainment.
Fulton County		Unclassifiable/Attainment.
Greene County		Unclassifiable/Attainment.
Huntingdon County		Unclassifiable/Attainment.
Indiana County		Unclassifiable/Attainment.
Jefferson County		Unclassifiable/Attainment.
Juniata County		Unclassifiable/Attainment.
Lackawanna County		Unclassifiable/Attainment.
Lancaster County		Unclassifiable/Attainment.
Lawrence County		Unclassifiable/Attainment.
Lebanon County		Unclassifiable/Attainment.
Lehigh County		Unclassifiable/Attainment.
Luzerne County		Unclassifiable/Attainment.
Lycoming County		Unclassifiable/Attainment.
McKean County		Unclassifiable/Attainment.
Mercer County		Unclassifiable/Attainment.
Mifflin County		Unclassifiable/Attainment.
Monroe County		Unclassifiable/Attainment.
Montgomery County		Unclassifiable/Attainment.
Montour County		Unclassifiable/Attainment.
Northampton County		Unclassifiable/Attainment.
Northumberland County		Unclassifiable/Attainment.
Perry County		Unclassifiable/Attainment.
Philadelphia County		Unclassifiable/Attainment.
Pike County		Unclassifiable/Attainment.
Potter County		Unclassifiable/Attainment.
Schuylkill County		Unclassifiable/Attainment.
Snyder County		Unclassifiable/Attainment.
Somerset County		Unclassifiable/Attainment.
Sullivan County		Unclassifiable/Attainment.
Susquehanna County		Unclassifiable/Attainment.
Tioga County		Unclassifiable/Attainment.
Union County		Unclassifiable/Attainment.
Venango County		Unclassifiable/Attainment.
Warren County		Unclassifiable/Attainment.

Pennsylvania—NO_2 (2010 1-Hour Standard)

Designated area	Designation [a]	
	Date [1]	Type
Washington County		Unclassifiable/Attainment.
Wayne County		Unclassifiable/Attainment.
Westmoreland County		Unclassifiable/Attainment.
Wyoming County		Unclassifiable/Attainment.
York County		Unclassifiable/Attainment.

[a] Includes Indian Country located in each county or area, except as otherwise specified.
[1] This date is 90 days after October 31, 2011, unless otherwise noted.

Pennsylvania—Ozone (8-Hour Standard)

Designated area	Designation [a]		Category/classification	
	Date [1]	Type	Date [1]	Type
Allentown-Bethlehem-Easton, PA: Carbon County Lehigh County Northampton County.	4/3/08	Attainment		
Altoona, PA: Blair County	8/1/07	Attainment		
Clearfield and Indiana, PA: Clearfield County, Indiana County, Northampton County.	4/20/09	Attainment		
Erie, PA: Erie County	11/8/2007	Attainment		
Franklin Co., PA: Franklin County	7/27/07	Attainment		
Greene County, PA: Greene County	04/20/09	Attainment		
Harrisburg-Lebanon-Carlisle PA:				
Cumberland County	7/25/07	Attainment		
Dauphin County	7/25/07	Attainment		
Lebanon County	7/25/07	Attainment		
Perry County	7/25/07	Attainment		
Johnstown, PA: Cambria County	8/1/07	Attainment		
Lancaster, PA: Lancaster County	7/6/07	Attainment		
Philadelphia-Wilmington-Atlantic City, PA-NJ-MD-DE:				
Bucks County		Nonattainment		Subpart 2/Moderate.[3]
Chester County		Nonattainment		Subpart 2/Moderate.[3]
Delaware County		Nonattainment		Subpart 2/Moderate.[3]
Montgomery County		Nonattainment		Subpart 2/Moderate.[3]
Philadelphia County		Nonattainment		Subpart 2/Moderate.[3]
Pittsburgh-Beaver Valley, PA:				
Allegheny County		Nonattainment	6/13/12	Subpart 2/Moderate.
Armstrong County		Nonattainment	6/13/12	Subpart 2/Moderate.
Beaver County		Nonattainment	6/13/12	Subpart 2/Moderate.
Butler County		Nonattainment	6/13/12	Subpart 2/Moderate.
Fayette County		Nonattainment	6/13/12	Subpart 2/Moderate.
Washington County		Nonattainment	6/13/12	Subpart 2/Moderate.
Westmoreland County		Nonattainment	6/13/12	Subpart 2/Moderate.
Reading, PA: Berks County	9/10/07	Attainment		
Scranton-Wilkes-Barre, PA: Lackawanna County, Luzerne County, Monroe County, Wyoming County.	12/19/07	Attainment		
State College, PA: Centre County	12/14/07	Attainment.		
Tioga Co., PA: Tioga County	07/06/07	Attainment.		
Williamsport, PA: Lycoming County		Unclassifiable/Attainment		
York, PA:				
Adams County	2/13/08	Attainment		
York County	2/13/08	Attainment		
Youngstown-Warren-Sharon, OH–PA Area: Mercer County	11/19/07	Attainment		
AQCR 151 NE Pennsylvania Intrastate (remainder of):				
Bradford County		Unclassifiable/Attainment		
Sullivan County		Unclassifiable/Attainment		
AQCR 178 NW Pennsylvania Interstate (remainder of):				
Cameron County		Unclassifiable/Attainment		
Clarion County		Unclassifiable/Attainment		
Elk County		Unclassifiable/Attainment		
Forest County		Unclassifiable/Attainment		
Jefferson County		Unclassifiable/Attainment		
McKean County		Unclassifiable/Attainment		
Potter County		Unclassifiable/Attainment		
Venango County		Unclassifiable/Attainment		
AQCR 195 Central Pennsylvania Intrastate (remainder of):				

Pennsylvania—Ozone (8-Hour Standard)

Designated area	Designation [a]		Category/classification	
	Date [1]	Type	Date [1]	Type
Bedford County		Unclassifiable/Attainment		
Clinton County		Unclassifiable/Attainment		
Fulton County		Unclassifiable/Attainment		
Huntingdon County		Unclassifiable/Attainment		
Mifflin County		Unclassifiable/Attainment		
Montour County		Unclassifiable/Attainment		
Union County		Unclassifiable/Attainment		
Rest of State		Unclassifiable/Attainment		
Columbia County		Unclassifiable/Attainment		
Crawford County		Unclassifiable/Attainment		
Juniata County		Unclassifiable/Attainment		
Lawrence County		Unclassifiable/Attainment		
Northumberland County		Unclassifiable/Attainment		
Pike County		Unclassifiable/Attainment		
Schuylkill County		Unclassifiable/Attainment		
Snyder County		Unclassifiable/Attainment		
Somerset County		Unclassifiable/Attainment		
Susquehanna County		Unclassifiable/Attainment		
Warren County		Unclassifiable/Attainment		
Wayne County		Unclassifiable/Attainment		

[a] Includes Indian Country located in each county or area, except as otherwise specified.
[1] This date is June 15, 2004, unless otherwise noted.
[2] November 22, 2004.

Pennsylvania—$PM_{2.5}$ (Annual NAAQS)

Designated area	Designation [a]	
	Date [1]	Type
Harrisburg-Lebanon-Carlisle, PA:		
Cumberland County		Nonattainment.
Dauphin County		Nonattainment.
Lebanon County		Nonattainment.
Johnstown, PA:		
Cambria County		Nonattainment.
Indiana County (part)		Nonattainment.
Townships of West Wheatfield, Center, East Wheatfield, and Armagh Borough and Homer City Borough		
Lancaster, PA:		
Lancaster County		Nonattainment.
Liberty-Clairton, PA:		
Allegheny County (part)		Nonattainment.
Lincoln Borough, Clairton City, Glassport Borough, Liberty Borough, Port Vue Borough		
Philadelphia-Wilmington, PA-NJ-DE:		
Bucks County		Nonattainment.
Chester County		Nonattainment.
Delaware County		Nonattainment.
Montgomery County		Nonattainment.
Philadelphia County		Nonattainment.
Pittsburgh-Beaver Valley, PA:		
Allegheny County (remainder)		Nonattainment.
Armstrong County (part)		Nonattainment.
Elderton Borough and Plumcreek and Washington Townships		
Beaver County		Nonattainment.
Butler County		Nonattainment.
Greene County (part)		Nonattainment.
Monongahela Township		
Lawrence County (part)		Nonattainment.
Township of Taylor south of New Castle City		
Washington County		Nonattainment.
Westmoreland County		Nonattainment.
Reading, PA:		
Berks County		Nonattainment.
York, PA:		
York County		Nonattainment.
Youngstown-Warren-Sharon, OH-PA:		
Mercer County		Unclassifiable/Attainment.
AQCR 151 Northeast Pennsylvania-Upper Delaware Valley Interstate:		
Bradford County		Unclassifiable/Attainment.

Pennsylvania—$PM_{2.5}$ (Annual NAAQS)

Designated area	Designation [a]	
	Date [1]	Type
Carbon County		Unclassifiable/Attainment.
Lackawanna County		Unclassifiable/Attainment.
Lehigh County		Unclassifiable/Attainment.
Luzerne County		Unclassifiable/Attainment.
Monroe County		Unclassifiable/Attainment.
Northampton County		Unclassifiable/Attainment.
Pike County		Unclassifiable/Attainment.
Schuylkill County		Unclassifiable/Attainment.
Sullivan County		Unclassifiable/Attainment.
Susquehanna County		Unclassifiable/Attainment.
Tioga County		Unclassifiable/Attainment.
Wayne County		Unclassifiable/Attainment.
Wyoming County		Unclassifiable/Attainment.
AQCR 178 Northwest Pennsylvania-Youngstown Interstate:		
Cameron County		Unclassifiable/Attainment.
Clarion County		Unclassifiable/Attainment.
Clearfield County		Unclassifiable/Attainment.
Crawford County		Unclassifiable/Attainment.
Elk County		Unclassifiable/Attainment.
Erie County		Unclassifiable/Attainment.
Forest County		Unclassifiable/Attainment.
Jefferson County		Unclassifiable/Attainment.
Lawrence County (remainder)		Unclassifiable/Attainment.
McKean County		Unclassifiable/Attainment.
Potter County		Unclassifiable/Attainment.
Venango County		Unclassifiable/Attainment.
Warren County		Unclassifiable/Attainment.
AQCR 195 Central Pennsylvania Intrastate:		
Bedford County		Unclassifiable/Attainment.
Blair County		Unclassifiable/Attainment.
Centre County		Unclassifiable/Attainment.
Clinton County		Unclassifiable/Attainment.
Columbia County		Unclassifiable/Attainment.
Fulton County		Unclassifiable/Attainment.
Huntingdon County		Unclassifiable/Attainment.
Juniata County		Unclassifiable/Attainment.
Lycoming County		Unclassifiable/Attainment.
Mifflin County		Unclassifiable/Attainment.
Montour County		Unclassifiable/Attainment.
Northumberland County		Unclassifiable/Attainment.
Snyder County		Unclassifiable/Attainment.
Somerset County		Unclassifiable/Attainment.
Union County		Unclassifiable/Attainment.
AQCR 196 South Central Pennsylvania Intrastate:		
Adams County		Unclassifiable/Attainment.
Franklin County		Unclassifiable/Attainment.
Perry County		Unclassifiable/Attainment.
AQCR 197 Southwest Pennsylvania Intrastate:		
Armstrong County (remainder)		Unclassifiable/Attainment.
Fayette County		Unclassifiable/Attainment.
Greene County (remainder)		Unclassifiable/Attainment.
Indiana County (remainder)		Unclassifiable/Attainment.

[a] Includes Indian Country located in each county or area, except as otherwise specified.
[1] This date is 90 days after January 5, 2005, unless otherwise noted.

Pennsylvania—$PM_{2.5}$ [24-hour NAAQS]

Designated area	Designation for the 1997 NAAQS [a]		Designation for the 2006 NAAQS [a]	
	Date [1]	Type	Date [2]	Type
Allentown, PA:				
Lehigh County		Unclassifiable/Attainment		Nonattainment.
Northampton County		Unclassifiable/Attainment		Nonattainment.
Harrisburg-Lebanon-Carlisle-York, PA:				
Cumberland County		Unclassifiable/Attainment		Nonattainment.
Dauphin County		Unclassifiable/Attainment		Nonattainment.

Pennsylvania—$PM_{2.5}$ [24-hour NAAQS]

Designated area	Designation for the 1997 NAAQS [a]		Designation for the 2006 NAAQS [a]	
	Date [1]	Type	Date [2]	Type
Lebanon County		Unclassifiable/Attainment		Nonattainment.
York County		Unclassifiable/Attainment		Nonattainment.
Johnstown, PA:				
Cambria County		Unclassifiable/Attainment		Nonattainment.
Indiana County (part)		Unclassifiable/Attainment		Nonattainment.
Townships of West Wheatfield, Center, East Wheatfield, and Armagh Borough and Homer City Borough.				
Lancaster, PA:				
Lancaster County		Unclassifiable/Attainment		Nonattainment.
Liberty-Clairton, PA:				
Allegheny County (part)		Unclassifiable/Attainment		Nonattainment.
Lincoln Borough, Clairton City, Glassport Borough, Liberty Borough, Port Vue Borough.				
Philadelphia-Wilmington, PA-NJ-DE:				
Bucks County		Unclassifiable/Attainment		Nonattainment.
Chester County		Unclassifiable/Attainment		Nonattainment.
Delaware County		Unclassifiable/Attainment		Nonattainment.
Montgomery County		Unclassifiable/Attainment		Nonattainment.
Philadelphia County		Unclassifiable/Attainment		Nonattainment.
Pittsburgh-Beaver Valley, PA:				
Allegheny County (remainder)		Unclassifiable/Attainment		Nonattainment.
Armstrong County (part)		Unclassifiable/Attainment		Nonattainment.
Elderton Borough and Plumcreek and Washington Townships.				
Beaver County		Unclassifiable/Attainment		Nonattainment.
Butler County		Unclassifiable/Attainment		Nonattainment.
Greene County (part)		Unclassifiable/Attainment		Nonattainment.
Monongahela Township.				
Lawrence County (part)		Unclassifiable/Attainment		Nonattainment.
Township of Taylor south of New Castle City.				
Washington County		Unclassifiable/Attainment		Nonattainment.
Westmoreland County		Unclassifiable/Attainment		Nonattainment.
Youngstown-Warren-Sharon, OH-PA:				
Mercer County		Unclassifiable/Attainment		Unclassifiable/Attainment.
Rest of State:				
AQCR 151 Northeast Pennsylvania-Upper Delaware Valley Interstate:				
Berks County		Unclassifiable/Attainment		Unclassifiable/Attainment.
Bradford County		Unclassifiable/Attainment		Unclassifiable/Attainment.
Carbon County		Unclassifiable/Attainment		Unclassifiable/Attainment.

Pennsylvania—$PM_{2.5}$ [24-hour NAAQS]

Designated area	Designation for the 1997 NAAQS [a]		Designation for the 2006 NAAQS [a]	
	Date [1]	Type	Date [2]	Type
Lackawanna County		Unclassifiable/Attainment		Unclassifiable/Attainment.
Luzerne County		Unclassifiable/Attainment		Unclassifiable/Attainment.
Monroe County		Unclassifiable/Attainment		Unclassifiable/Attainment.
Pike County		Unclassifiable/Attainment		Unclassifiable/Attainment.
Schuylkill County		Unclassifiable/Attainment		Unclassifiable/Attainment.
Sullivan County		Unclassifiable/Attainment		Unclassifiable/Attainment.
Susquehanna County		Unclassifiable/Attainment		Unclassifiable/Attainment.
Tioga County		Unclassifiable/Attainment		Unclassifiable/Attainment.
Wayne County		Unclassifiable/Attainment		Unclassifiable/Attainment.
Wyoming County		Unclassifiable/Attainment		Unclassifiable/Attainment.
AQCR 178 Northwest Pennsylvania-Youngstown Interstate:				
Cameron County		Unclassifiable/Attainment		Unclassifiable/Attainment.
Clarion County		Unclassifiable/Attainment		Unclassifiable/Attainment.
Clearfield County		Unclassifiable/Attainment		Unclassifiable/Attainment.
Crawford County		Unclassifiable/Attainment		Unclassifiable/Attainment.
Elk County		Unclassifiable/Attainment		Unclassifiable/Attainment.
Erie County		Unclassifiable/Attainment		Unclassifiable/Attainment.
Forest County		Unclassifiable/Attainment		Unclassifiable/Attainment.
Jefferson County		Unclassifiable/Attainment		Unclassifiable/Attainment.
Lawrence County (remainder)		Unclassifiable/Attainment		Unclassifiable/Attainment.
McKean County		Unclassifiable/Attainment		Unclassifiable/Attainment.
Potter County		Unclassifiable/Attainment		Unclassifiable/Attainment.
Venango County		Unclassifiable/Attainment		Unclassifiable/Attainment.
Warren County		Unclassifiable/Attainment		Unclassifiable/Attainment.
AQCR 195 Central Pennsylvania Intrastate:				
Bedford County		Unclassifiable/Attainment		Unclassifiable/Attainment.
Blair County		Unclassifiable/Attainment		Unclassifiable/Attainment.
Centre County		Unclassifiable/Attainment		Unclassifiable/Attainment.
Clinton County		Unclassifiable/Attainment		Unclassifiable/Attainment.
Columbia County		Unclassifiable/Attainment		Unclassifiable/Attainment.
Fulton County		Unclassifiable/Attainment		Unclassifiable/Attainment.
Huntingdon County		Unclassifiable/Attainment		Unclassifiable/Attainment.
Juniata County		Unclassifiable/Attainment		Unclassifiable/Attainment.
Lycoming County		Unclassifiable/Attainment		Unclassifiable/Attainment.
Mifflin County		Unclassifiable/Attainment		Unclassifiable/Attainment.
Montour County		Unclassifiable/Attainment		Unclassifiable/Attainment.

Pennsylvania—$PM_{2.5}$ [24-hour NAAQS]

Designated area	Designation for the 1997 NAAQS [a]		Designation for the 2006 NAAQS [a]	
	Date [1]	Type	Date [2]	Type
Northumberland County		Unclassifiable/Attainment		Unclassifiable/Attainment.
Snyder County		Unclassifiable/Attainment		Unclassifiable/Attainment.
Somerset County		Unclassifiable/Attainment		Unclassifiable/Attainment.
Union County		Unclassifiable/Attainment		Unclassifiable/Attainment.
AQCR 196 South Central Pennsylvania Intrastate:				
Adams County		Unclassifiable/Attainment		Unclassifiable/Attainment.
Franklin County		Unclassifiable/Attainment		Unclassifiable/Attainment.
Perry County		Unclassifiable/Attainment		Unclassifiable/Attainment.
AQCR 197 Southwest Pennsylvania Intrastate:				
Armstrong County (remainder)		Unclassifiable/Attainment		Unclassifiable/Attainment.
Fayette County		Unclassifiable/Attainment		Unclassifiable/Attainment.
Greene County (remainder)		Unclassifiable/Attainment		Unclassifiable/Attainment.
Indiana County (remainder)		Unclassifiable/Attainment		Unclassifiable/Attainment.

[a] Includes Indian Country located in each county or area, except as otherwise specified.
[1] This date is 90 days after January 5, 2005, unless otherwise noted.
[2] This date is 30 days after November 13, 2009, unless otherwise noted.

Pennsylvania—2008 Lead NAAQS

Designated area	Designation for the 2008 NAAQS[a]	
	Date [1]	Type
Lower Beaver Valley, PA:		
Beaver County (part)	[2] 12/31/10	Nonattainment.
Area is bounded by Potter Township, Vanport Township, and Center Township.		
Lyons, PA:		
Berks County (part)	12/31/10	Nonattainment.
Area is bounded by Kutztown Borough, Lyons Borough, Maxatawny Township and Richmond Township.		
North Reading, PA:		
Berks County (part)	12/31/10	Nonattainment.
Area is bounded by Alsace Township, Laureldale Borough, and Muhlenberg Township.		
Rest of State		Unclassifiable/Attainment.

[a] Includes Indian Country located in each county or area, except as otherwise specified.
[1] December 31, 2011 unless otherwise noted.
[2] Center Township was included in the nonattainment area as of 12/31/11.

[43 FR 40513, Sept. 12, 1978]

EDITORIAL NOTE: For FEDERAL REGISTER citations affecting § 81.339, see the List of CFR Sections Affected, which appears in the Finding Aids section of the printed volume and at *www.fdsys.gov*.

EFFECTIVE DATE NOTE: At 77 FR 30142, May 21, 2012, § 81.339 was amended by revising the table heading for ''Pennsylvania—Ozone (8-Hour Standard)'' to read ''Pennsylvania—1997 8-Hour Ozone NAAQS (Primary and Secondary)''; by adding a new table entitled ''Pennsylvania—2008 8-Hour Ozone NAAQS (Primary and Secondary)'' following the newly designated table ''Pennsylvania—1997 8-Hour Ozone NAAQS (Primary and Secondary)'', effective July 20, 2012. For the convenience of the user, the added text is set forth as follows:

§ 81.339 Pennsylvania.

* * * * *

Pennsylvania—2008 8-Hour Ozone NAAQS (Primary and secondary)

Designated area	Designation		Classification	
	Date [1]	Type	Date [1]	Type
Allentown-Bethlehem-Easton, PA [2]	.....	Nonattainment	.....	Marginal.
Carbon County				
Lehigh County				
Northampton County				
Lancaster, PA [2]	.....	Nonattainment	.....	Marginal.
Lancaster County				
Philadelphia-Wilmington-Atlantic City, PA-NJ-MD-DE [2].	.....	Nonattainment	.....	Marginal.
Bucks County				
Chester County				
Delaware County				
Montgomery County				
Philadelphia County				
Pittsburgh-Beaver Valley, PA [2]	.....	Nonattainment	.....	Marginal.
Allegheny County				
Armstrong County				
Beaver County				
Butler County				
Fayette County				
Washington County				
Westmoreland County				
Reading, PA [2]	.....	Nonattainment	.....	Marginal.
Berks County				
AQCR 151 NE Pennsylvania Intrastate (remainder) [3]				
Bradford County	.....	Unclassifiable/Attainment		
Lackawanna County	.....	Unclassifiable/Attainment		
Luzerne County	.....	Unclassifiable/Attainment		
Monroe County	.....	Unclassifiable/Attainment		
Pike County	.....	Unclassifiable/Attainment		
Schuylkill County	.....	Unclassifiable/Attainment		
Sullivan County	.....	Unclassifiable/Attainment		
Susquehanna County	.....	Unclassifiable/Attainment		
Tioga County	.....	Unclassifiable/Attainment		
Wayne County	.....	Unclassifiable/Attainment		
Wyoming	.....	Unclassifiable/Attainment		
AQCR 178 NW Pennsylvania Intrastate [3]				
Cameron County	.....	Unclassifiable/Attainment		
Clarion County	.....	Unclassifiable/Attainment		
Clearfield County	.....	Unclassifiable/Attainment		
Crawford County	.....	Unclassifiable/Attainment		
Elk County	.....	Unclassifiable/Attainment		
Erie County	.....	Unclassifiable/Attainment		
Forest County	.....	Unclassifiable/Attainment		
Jefferson County	.....	Unclassifiable/Attainment		
Lawrence County	.....	Unclassifiable/Attainment		
McKean County	.....	Unclassifiable/Attainment		
Mercer County	.....	Unclassifiable/Attainment		
Potter County	.....	Unclassifiable/Attainment		
Venango County	.....	Unclassifiable/Attainment		
Warren County	.....	Unclassifiable/Attainment		
AQCR 195 Central Pennsylvania Intrastate [3]				
Bedford County	.....	Unclassifiable/Attainment		
Blair County	.....	Unclassifiable/Attainment		
Cambria County	.....	Unclassifiable/Attainment		
Centre County	.....	Unclassifiable/Attainment		
Clinton County	.....	Unclassifiable/Attainment		
Columbia County	.....	Unclassifiable/Attainment		
Fulton County	.....	Unclassifiable/Attainment		
Huntingdon County	.....	Unclassifiable/Attainment		
Juniata County	.....	Unclassifiable/Attainment		
Lycoming County	.....	Unclassifiable/Attainment		
Mifflin County	.....	Unclassifiable/Attainment		
Montour County	.....	Unclassifiable/Attainment		
Northumberland County	.....	Unclassifiable/Attainment		
Snyder County	.....	Unclassifiable/Attainment		
Somerset County	.....	Unclassifiable/Attainment		
Union County	.....	Unclassifiable/Attainment		
AQCR 196 South Central Pennsylvania (remainder) [3]				
Adams County	.....	Unclassifiable/Attainment		
Cumberland County	.....	Unclassifiable/Attainment		

Pennsylvania—2008 8-Hour Ozone NAAQS (Primary and secondary)

Designated area	Designation		Classification	
	Date [1]	Type	Date [1]	Type
Dauphin County	.....	Unclassifiable/Attainment		
Franklin County	.....	Unclassifiable/Attainment		
Lebanon County	.....	Unclassifiable/Attainment		
Perry County	.....	Unclassifiable/Attainment		
York County	.....	Unclassifiable/Attainment		
AQCR 197 Southwest Pennsylvania (remainder) [3]				
Green County	.....	Unclassifiable/Attainment		
Indiana County	.....	Unclassifiable/Attainment		

[1] This date is July 20, 2012, unless otherwise noted.
[2] Excludes Indian country located in each area, unless otherwise noted.
[3] Includes any Indian country in each county or area, unless otherwise specified.

* * * * *

§ 81.340 Rhode Island.

Rhode Island—TSP

Designated area	Does not meet primary standards	Does not meet secondary standards	Cannot be classified	Better than national standards
Providence	.....	X		
East Providence, Warwick, North Providence, Pawtucket, and Central Falls	.....	.....	X	
Remainder of Rhode Island portion of AQCR 120	.....	.....	.....	X

Rhode Island—SO_2

Designated area	Does not meet primary standards	Does not meet secondary standards	Cannot be classified	Better than national standards
Rhode Island portion of AQCR 120	.....	.....	.....	X

Rhode Island—Carbon Monoxide

Designated Area	Designation		Classification	
	Date [1]	Type	Date [1]	Type
Statewide	.....	Unclassifiable/Attainment		
Bristol County				
Kent County				
Newport County				
Providence County				
Washington County				

[1] This date is November 15, 1990, unless otherwise noted.

Rhode Island—Ozone (1-Hour Standard)[2]

Designated area	Designation		Classification	
	Date [1]	Type	Date [1]	Type
Providence (all of RI) Area:				
Bristol County	.....	Nonattainment	.....	Serious.
Kent County	.....	Nonattainment	.....	Serious.
Newport County	.....	Nonattainment	.....	Serious.
Providence County	.....	Nonattainment	.....	Serious.
Washington County	.....	Nonattainment	.....	Serious.

[1] This date is January 16, 2001, unless otherwise noted.
[2] The 1-hour ozone standard is revoked effective June 15, 2005 for all areas in Rhode Island.

Rhode Island—NO_2 (1971 Annual Standard)

Designated area	Does not meet primary standards	Cannot be classified or better than national standards
Rhode Island portion of AQCR 120	.....	X

Rhode Island—NO_2 (2010 1-Hour Standard)

Designated area	Designation [a]	
	Date [1]	Type
State of Rhode Island	.....	Unclassifiable/Attainment.

[a] Includes Indian Country located in each county or area, except as otherwise specified.
[1] This date is 90 days after October 31, 2011, unless otherwise noted.

Rhode Island—Ozone (8-Hour Standard)

Designated area	Designation [a]		Category/classification	
	Date [1]	Type	Date [1]	Type
Providence (all of RI), RI:				
Bristol County	.....	Nonattainment	.....	Subpart 2/Moderate.
Kent County	.....	Nonattainment	.....	Subpart 2/Moderate.
Newport County	.....	Nonattainment	.....	Subpart 2/Moderate.
Providence County	.....	Nonattainment	.....	Subpart 2/Moderate.
Washington County	.....	Nonattainment	.....	Subpart 2/Moderate.

[a] Includes Indian Country located in each county or area, except as otherwise specified.
[1] This date is June 15, 2004, unless otherwise noted.

Rhode Island—$PM_{2.5}$ (Annual NAAQS)

Designated area	Designation [a]	
	Date [1]	Type
Statewide:		
Bristol County	.....	Unclassifiable/Attainment.
Kent County	.....	Unclassifiable/Attainment.
Newport County	.....	Unclassifiable/Attainment.
Providence County	.....	Unclassifiable/Attainment.
Washington County	.....	Unclassifiable/Attainment.

[a] Includes Indian Country located in each county or area, except as otherwise specified.
[1] This date is 90 days after January 5, 2005, unless otherwise noted.

Rhode Island—$PM_{2.5}$ [24-hour NAAQS]

Designated area	Designation for the 1997 NAAQS [a]		Designation for the 2006 NAAQS [a]	
	Date [1]	Type	Date [2]	Type
Statewide:				
Bristol County	.....	Unclassifiable/Attainment	.....	Unclassifiable/Attainment.
Kent County	.....	Unclassifiable/Attainment	.....	Unclassifiable/Attainment.
Newport County	.....	Unclassifiable/Attainment	.....	Unclassifiable/Attainment.
Providence County	.....	Unclassifiable/Attainment	.....	Unclassifiable/Attainment.
Washington County	.....	Unclassifiable/Attainment	.....	Unclassifiable/Attainment.

[a] Includes Indian Country located in each county or area, except as otherwise specified.
[1] This date is 90 days after January 5, 2005, unless otherwise noted.
[2] This date is 30 days after November 13, 2009, unless otherwise noted.

Rhode Island—2008 Lead NAAQS

Designated area	Designation for the 2008 NAAQS[a]	
	Date [1]	Type
Whole State	.....	Unclassifiable/Attainment.

[a] Includes Indian Country located in each county or area, except as otherwise specified.
[1] December 31, 2011 unless otherwise noted.

[43 FR 8964, Mar. 3, 1978, as amended at 46 FR 25461, May 7, 1981; 47 FR 30066, July 12, 1982; 56 FR 56823, Nov. 6, 1991; 63 FR 31077, June 5, 1998; 64 FR 30916, June 9, 1999; 65 FR 45257, July 20, 2000; 69 FR 23932, Apr. 30, 2004; 70 FR 1000, Jan. 5, 2005; 70 FR 44477, Aug. 3, 2005; 74 FR 58760, Nov. 13, 2009; 76 FR 72115, Nov. 22, 2011; 76 FR 76048, Dec. 6, 2011; 77 FR 9576, Feb. 17, 2012]

EFFECTIVE DATE NOTE: At 77 FR 30144, May 21, 2012, § 81.340 was amended by revising the table heading for ''Rhode Island—Ozone (8-Hour Standard)'' to read ''Rhode Island—1997 8-Hour Ozone NAAQS (Primary and Secondary)''; by adding a new table entitled ''Rhode Island—2008 8-Hour Ozone NAAQS (Primary and Secondary)'' following the newly designated table ''Rhode Island—1997 8-Hour Ozone NAAQS (Primary and Secondary)'', effective July 20, 2012. For the convenience of the user, the added text is set forth as follows:

§ 81.340 Rhode Island.

* * * * *

Rhode Island—2008 8-Hour Ozone NAAQS (Primary and secondary)

Designated area	Designation		Classification	
	Date [1]	Type	Date [1]	Type
Providence (all of RI), RI: [2]		Unclassifiable/Attainment		
Bristol County				
Kent County				
Newport County				
Providence County				
Washington County				

[1] This date is July 20, 2012, unless otherwise noted.
[2] Includes any Indian country in each county or area, unless otherwise specified.

* * * * *

§ 81.341 South Carolina.

South Carolina—TSP

Designated area	Does not meet primary standards	Does not meet secondary standards	Cannot be classified	Better than national standards
Abbeville County				X
Aiken County				X
Allendale County				X
Anderson County				X
Bamberg County				X
Barnwell County				X
Beaufort County				X
Berkeley County				X
Calhoun County				X
That portion of Charleston County within section of Charleston just west of south end of US Naval Station		X		
Portions of Charleston County not otherwise designated				X
Cherokee County				X
Chester County				X
Chesterfield County				X
Clarendon County				X
Colleton County				X
Darlington County				X
Dillon County				X
Dorchester County				X
Edgefield County				X
Fairfield County				X
Florence County				X
Georgetown County				X
Greenville County				X
Greenwood County				X
Hampton County				X
Horry County				X
Jasper County				X
Kershaw County				X
Lancaster County				X
Laurens County				X
Lee County				X

South Carolina—TSP

Designated area	Does not meet primary standards	Does not meet secondary standards	Cannot be classified	Better than national standards
Lexington County				X
McCormick County				X
Marion County				X
Marlboro County				X
Newberry County				X
Oconee County				X
Orangeburg				X
Pickens County				X
Richland County				X
Saluda County				X
Spartanburg County				X
Sumter County				X
Union County				X
Williamsburg County				X
York County				X

South Carolina—SO_2

Designated area	Does not meet primary standards	Does not meet secondary standards	Cannot be classified	Better than national standards
Abbeville County				X
Aiken County				X
Allendale County				X
Anderson County				X
Bamberg County				X
Barnwell County				X
Beaufort County				X
Berkeley County				X
Calhoun County				X
Charleston County				X
Cherokee County				X
Chester County				X
Chesterfield County				X
Clarendon County				X
Colleton County				X
Darlington County				X
Dillon County				X
Dorchester County				X
Edgefield County				X
Fairfield County				X
Florence County				X
Georgetown County				X
Greenville County				X
Greenwood County				X
Hampton County				X
Horry County				X
Jasper County				X
Kershaw County				X
Lancaster County				X
Laurens County				X
Lee County				X
Lexington County				X
McCormick County				X
Marion County				X
Marlboro County				X
Newberry County				X
Oconee County				X
Orangeburg County				X
Pickens County				X
Richland County				X
Saluda County				X
Spartanburg County				X
Sumter County				X
Union County				X
Williamsburg County				X
York County				X

South Carolina—Carbon Monoxide

Designated Area	Designation		Classification	
	Date [1]	Type	Date [1]	Type
Statewide	.....	Unclassifiable/Attainment		
Abbeville County				
Aiken County				
Allendale County				
Anderson County				
Bamberg County				
Barnwell County				
Beaufort County				
Berkeley County				
Calhoun County				
Charleston County				
Cherokee County				
Chester County				
Chesterfield County				
Clarendon County				
Colleton County				
Darlington County				
Dillon County				
Dorchester County				
Edgefield County				
Fairfield County				
Florence County				
Georgetown County				
Greenville County				
Greenwood County				
Hampton County				
Horry County				
Jasper County				
Kershaw County				
Lancaster County				
Laurens County				
Lee County				
Lexington County				
Marion County				
Marlboro County				
McCormick County				
Newberry County				
Oconee County				
Orangeburg County				
Pickens County				
Richland County				
Saluda County				
Spartanburg County				
Sumter County				
Union County				
Williamsburg County				
York County				

[1] This date is November 15, 1990, unless otherwise noted.

South Carolina—Ozone (1-Hour Standard)[2]

Designated area	Designation		Classification	
	Date [1]	Type	Date [1]	Type
Statewide	.....	Unclassifiable/Attainment		
Abbeville County				
Aiken County				
Allendale County				
Anderson County				
Bamberg County				
Barnwell County				
Beaufort County				
Berkeley County				
Calhoun County				
Charleston County				
Cherokee County				
Chester County				
Chesterfield County				
Clarendon County				
Colleton County				

South Carolina—Ozone (1-Hour Standard)[2]

Designated area	Designation		Classification	
	Date [1]	Type	Date [1]	Type
Darlington County				
Dillon County				
Dorchester County				
Edgefield County				
Fairfield County				
Florence County				
Georgetown County				
Greenville County				
Greenwood County				
Hampton County				
Horry County				
Jasper County				
Kershaw County				
Lancaster County				
Laurens County				
Lee County				
Lexington County				
Marion County				
Marlboro County				
McCormick County				
Newberry County				
Oconee County				
Orangeburg County				
Pickens County				
Richland County				
Saluda County				
Spartanburg County				
Sumter County				
Union County				
Williamsburg County				
York County				

[1] This date is October 18, 2000, unless otherwise noted.
[2] The 1-hour ozone standard is revoked effective June 15, 2005 for all areas in South Carolina except the Central Midlands-I (Columbia) and Appalachian-A (Greenville-Spartanburg-Anderson) areas where it is revoked effective April 15, 2009.

South Carolina—NO_2 (1971 Annual Standard)

Designated area	Does not meet primary standards	Cannot be classified or better than national standards
Statewide		X

South Carolina—NO_2 (2010 1-Hour Standard)

Designated area	Designation [a]	
	Date [1]	Type
Abbeville County		Unclassifiable/Attainment.
Aiken County		Unclassifiable/Attainment.
Allendale County		Unclassifiable/Attainment.
Anderson County		Unclassifiable/Attainment.
Bamberg County		Unclassifiable/Attainment.
Barnwell County		Unclassifiable/Attainment.
Beaufort County		Unclassifiable/Attainment.
Berkeley County		Unclassifiable/Attainment.
Calhoun County		Unclassifiable/Attainment.
Charleston County		Unclassifiable/Attainment.
Cherokee County		Unclassifiable/Attainment.
Chester County		Unclassifiable/Attainment.
Chesterfield County		Unclassifiable/Attainment.
Clarendon County		Unclassifiable/Attainment.
Colleton County		Unclassifiable/Attainment.
Darlington County		Unclassifiable/Attainment.
Dillon County		Unclassifiable/Attainment.
Dorchester County		Unclassifiable/Attainment.
Edgefield County		Unclassifiable/Attainment.
Fairfield County		Unclassifiable/Attainment.
Florence County		Unclassifiable/Attainment.
Georgetown County		Unclassifiable/Attainment.

South Carolina—NO_2 (2010 1-Hour Standard)

Designated area	Designation [a]	
	Date [1]	Type
Greenwood County		Unclassifiable/Attainment.
Greenville County		Unclassifiable/Attainment.
Hampton County		Unclassifiable/Attainment.
Horry County		Unclassifiable/Attainment.
Jasper County		Unclassifiable/Attainment.
Kershaw County		Unclassifiable/Attainment.
Lancaster County		Unclassifiable/Attainment.
Laurens County		Unclassifiable/Attainment.
Lee County		Unclassifiable/Attainment.
Lexington County		Unclassifiable/Attainment.
McCormick County		Unclassifiable/Attainment.
Marion County		Unclassifiable/Attainment.
Marlboro County		Unclassifiable/Attainment.
Newberry County		Unclassifiable/Attainment.
Oconee County		Unclassifiable/Attainment.
Orangeburg County		Unclassifiable/Attainment.
Pickens County		Unclassifiable/Attainment.
Richland County		Unclassifiable/Attainment.
Saluda County		Unclassifiable/Attainment.
Spartanburg County		Unclassifiable/Attainment.
Sumter County		Unclassifiable/Attainment.
Union County		Unclassifiable/Attainment.
Williamsburg County		Unclassifiable/Attainment.
York County		Unclassifiable/Attainment.

[a] Includes Indian Country located in each county or area, except as otherwise specified.
[1] This date is 90 days after October 31, 2011, unless otherwise noted.

South Carolina—Ozone (8-Hour Standard)

Designated area	Designation [a]		Category/classification	
	Date [1]	Type	Date [1]	Type
Columbia, SC:				
Lexington County (part) Portion along MPO lines.	(2)	Attainment.		
Richland County (part) Portion along MPO lines.	(2)			
Greenville-Spartanburg-Anderson, SC:				
Anderson County	(2)	Attainment.		
Greenville County	(2)	Attainment.		
Spartanburg County	(2)	Attainment.		
Charlotte-Gastonia-Rock Hill, NC-SC:				
York County (part) Portion along MPO lines	This action is effective May 31, 2011	Nonattainment	June 15, 2004	[3] Subpart 2/Moderate.
Portion along MPO lines				
Rest of State:		Unclassifiable/Attainment.		
Abbeville County				
Aiken County				
Allendale County				
Bamberg County				
Barnwell County				
Beaufort County				
Berkeley County				
Calhoun County				
Charleston County				
Cherokee County				
Chester County				
Chesterfield County				
Clarendon County				
Colleton County				
Darlington County				
Dillon County				
Dorchester County				
Edgefield County				
Fairfield County				
Florence County				
Georgetown County				

South Carolina—Ozone (8-Hour Standard)

Designated area	Designation [a]		Category/classification	
	Date [1]	Type	Date [1]	Type
Greenwood County				
Hampton County				
Horry County				
Jasper County				
Kershaw County				
Lancaster County				
Laurens County				
Lee County				
Lexington County (part) remainder				
Marion County				
Marlboro County				
McCormick County				
Newberry County				
Oconee County				
Orangeburg County				
Pickens County				
Richland County (part) remainder				
Saluda County				
Sumter County				
Union County				
Williamsburg County				
York County (part) remainder				

[a] Includes Indian Country located in each county or area, except as otherwise specified.
[1] This date is June 15, 2004, unless otherwise noted.
[2] Effective April 15, 2008.

South Carolina—$PM_{2.5}$ (Annual NAAQS)

Designated area	Designation [a]	
	Date [1]	Type
Greenville-Spartanburg, SC:		
Anderson County		Unclassifiable
Greenville County		Unclassifiable
Spartanburg County		Unclassifiable
Rest of State:		
Abbeville County		Unclassifiable/Attainment.
Aiken County		Unclassifiable/Attainment.
Allendale County		Unclassifiable/Attainment.
Bamberg County		Unclassifiable/Attainment.
Barnwell County		Unclassifiable/Attainment.
Beaufort County		Unclassifiable/Attainment.
Berkeley County		Unclassifiable/Attainment.
Calhoun County		Unclassifiable/Attainment.
Charleston County		Unclassifiable/Attainment.
Cherokee County		Unclassifiable/Attainment.
Chester County		Unclassifiable/Attainment.
Chesterfield County		Unclassifiable/Attainment.
Clarendon County		Unclassifiable/Attainment.
Colleton County		Unclassifiable/Attainment.
Darlington County		Unclassifiable/Attainment.
Dillon County		Unclassifiable/Attainment.
Dorchester County		Unclassifiable/Attainment.
Edgefield County		Unclassifiable/Attainment.
Fairfield County		Unclassifiable/Attainment.
Florence County		Unclassifiable/Attainment.
Georgetown County		Unclassifiable/Attainment.
Greenwood County		Unclassifiable/Attainment.
Hampton County		Unclassifiable/Attainment.
Horry County		Unclassifiable/Attainment.
Jasper County		Unclassifiable/Attainment.
Kershaw County		Unclassifiable/Attainment.
Lancaster County		Unclassifiable/Attainment.
Laurens County		Unclassifiable/Attainment.
Lee County		Unclassifiable/Attainment.
Lexington County		Unclassifiable/Attainment.
McCormick County		Unclassifiable/Attainment.
Marion County		Unclassifiable/Attainment.
Marlboro County		Unclassifiable/Attainment.
Newberry County		Unclassifiable/Attainment.

South Carolina—$PM_{2.5}$ (Annual NAAQS)

Designated area	Designation [a]	
	Date [1]	Type
Oconee County		Unclassifiable/Attainment.
Orangeburg County		Unclassifiable/Attainment.
Pickens County		Unclassifiable/Attainment.
Richland County		Unclassifiable/Attainment.
Saluda County		Unclassifiable/Attainment.
Sumter County		Unclassifiable/Attainment.
Union County		Unclassifiable/Attainment.
Williamsburg County		Unclassifiable/Attainment.
York County		Unclassifiable/Attainment.

[a] Includes Indian Country located in each county or area, except as otherwise specified.
[1] This date is 90 days after January 5, 2005, unless otherwise noted.

South Carolina—$PM_{2.5}$ [24-hour NAAQS]

Designated area	Designation for the 1997 NAAQS [a]		Designation for the 2006 NAAQS [a]	
	Date [1]	Type	Date [2]	Type
Statewide:				
Abbeville County		Unclassifiable/Attainment		Unclassifiable/Attainment.
Aiken County		Unclassifiable/Attainment		Unclassifiable/Attainment.
Allendale County		Unclassifiable/Attainment		Unclassifiable/Attainment.
Anderson County		Unclassifiable/Attainment		Unclassifiable/Attainment.
Bamberg County		Unclassifiable/Attainment		Unclassifiable/Attainment.
Barnwell County		Unclassifiable/Attainment		Unclassifiable/Attainment.
Beaufort County		Unclassifiable/Attainment		Unclassifiable/Attainment.
Berkeley County		Unclassifiable/Attainment		Unclassifiable/Attainment.
Calhoun County		Unclassifiable/Attainment		Unclassifiable/Attainment.
Charleston County		Unclassifiable/Attainment		Unclassifiable/Attainment.
Cherokee County		Unclassifiable/Attainment		Unclassifiable/Attainment.
Chester County		Unclassifiable/Attainment		Unclassifiable/Attainment.
Chesterfield County		Unclassifiable/Attainment		Unclassifiable/Attainment.
Clarendon County		Unclassifiable/Attainment		Unclassifiable/Attainment.
Colleton County		Unclassifiable/Attainment		Unclassifiable/Attainment.
Darlington County		Unclassifiable/Attainment		Unclassifiable/Attainment.
Dillon County		Unclassifiable/Attainment		Unclassifiable/Attainment.
Dorchester County		Unclassifiable/Attainment		Unclassifiable/Attainment.
Edgefield County		Unclassifiable/Attainment		Unclassifiable/Attainment.
Fairfield County		Unclassifiable/Attainment		Unclassifiable/Attainment.
Florence County		Unclassifiable/Attainment		Unclassifiable/Attainment.
Georgetown County		Unclassifiable/Attainment		Unclassifiable/Attainment.
Greenwood County		Unclassifiable/Attainment		Unclassifiable/Attainment.
Greenville County		Unclassifiable/Attainment		Unclassifiable/Attainment.
Hampton County		Unclassifiable/Attainment		Unclassifiable/Attainment.
Horry County		Unclassifiable/Attainment		Unclassifiable/Attainment.

South Carolina—$PM_{2.5}$ [24-hour NAAQS]

Designated area	Designation for the 1997 NAAQS [a]		Designation for the 2006 NAAQS [a]	
	Date [1]	Type	Date [2]	Type
Jasper County		Unclassifiable/Attainment		Unclassifiable/Attainment.
Kershaw County		Unclassifiable/Attainment		Unclassifiable/Attainment.
Lancaster County		Unclassifiable/Attainment		Unclassifiable/Attainment.
Laurens County		Unclassifiable/Attainment		Unclassifiable/Attainment.
Lee County		Unclassifiable/Attainment		Unclassifiable/Attainment.
Lexington County		Unclassifiable/Attainment		Unclassifiable/Attainment.
McCormick County		Unclassifiable/Attainment		Unclassifiable/Attainment.
Marion County		Unclassifiable/Attainment		Unclassifiable/Attainment.
Marlboro County		Unclassifiable/Attainment		Unclassifiable/Attainment.
Newberry County		Unclassifiable/Attainment		Unclassifiable/Attainment.
Oconee County		Unclassifiable/Attainment		Unclassifiable/Attainment.
Orangeburg County		Unclassifiable/Attainment		Unclassifiable/Attainment.
Pickens County		Unclassifiable/Attainment		Unclassifiable/Attainment.
Richland County		Unclassifiable/Attainment		Unclassifiable/Attainment.
Saluda County		Unclassifiable/Attainment		Unclassifiable/Attainment.
Spartanburg County		Unclassifiable/Attainment		Unclassifiable/Attainment.
Sumter County		Unclassifiable/Attainment		Unclassifiable/Attainment.
Union County		Unclassifiable/Attainment		Unclassifiable/Attainment.
Williamsburg County		Unclassifiable/Attainment		Unclassifiable/Attainment.
York County		Unclassifiable/Attainment		Unclassifiable/Attainment.

[a] Includes Indian Country located in each county or area, except as otherwise specified.
[1] This date is 90 days after January 5, 2005, unless otherwise noted.
[2] This date is 30 days after November 13, 2009, unless otherwise noted.

South Carolina—2008 Lead NAAQS

Designated area	Designation for the 2008 NAAQS[a]	
	Date [1]	Type
Whole State		Unclassifiable/Attainment.

[a] Includes Indian Country located in each county or area, except as otherwise specified.
[1] December 31, 2011 unless otherwise noted.

[43 FR 8964, Mar. 3, 1978]

EDITORIAL NOTE: For FEDERAL REGISTER citations affecting §81.341 see the List of CFR Sections Affected, which appears in the Finding Aids section of the printed volume and at *www.fdsys.gov*.

EFFECTIVE DATE NOTE: At 77 FR 30144, May 21, 2012, §81.341 was amended by revising the table heading for ''South Carolina—Ozone (8-Hour Standard)'' to read ''South Carolina—1997 8-Hour Ozone NAAQS (Primary and Secondary)''; by adding a new table entitled ''South Carolina—2008 8-Hour Ozone NAAQS (Primary and Secondary)'' following the newly designated table ''South Carolina—1997 8-Hour Ozone NAAQS (Primary and Secondary)'', effective July 20, 2012. For the convenience of the user, the added text is set forth as follows:

§ 81.341 South Carolina.

* * * * *

South Carolina—2008 8-Hour Ozone NAAQS (Primary and secondary)

Designated area	Designation		Classification	
	Date [1]	Type	Date [1]	Type
Charlotte-Rock Hill, NC-SC: [2]		Nonattainment		Marginal.
York County (part)				
Portion along MPO lines				
Catawba Indian Nation (aka Catawba Tribe of South Carolina) [3].		Unclassifiable/Attainment		
Rest of State: [4]		Unclassifiable/Attainment		
Abbeville County		Unclassifiable/Attainment		
Aiken County		Unclassifiable/Attainment		
Allendale County		Unclassifiable/Attainment		
Bamberg County		Unclassifiable/Attainment		
Barnwell County		Unclassifiable/Attainment		
Beaufort County		Unclassifiable/Attainment		
Berkeley County		Unclassifiable/Attainment		
Calhoun County		Unclassifiable/Attainment		
Charleston County		Unclassifiable/Attainment		
Cherokee County		Unclassifiable/Attainment		
Chester County		Unclassifiable/Attainment		
Chesterfield County		Unclassifiable/Attainment		
Clarendon County		Unclassifiable/Attainment		
Colleton County		Unclassifiable/Attainment		
Darlington County		Unclassifiable/Attainment		
Dillon County		Unclassifiable/Attainment		
Dorchester County		Unclassifiable/Attainment		
Edgefield County		Unclassifiable/Attainment		
Fairfield County		Unclassifiable/Attainment		
Florence County		Unclassifiable/Attainment		
Georgetown County		Unclassifiable/Attainment		
Greenwood County		Unclassifiable/Attainment		
Hampton County		Unclassifiable/Attainment		
Horry County		Unclassifiable/Attainment		
Jasper County		Unclassifiable/Attainment		
Kershaw County		Unclassifiable/Attainment		
Lancaster County		Unclassifiable/Attainment		
Laurens County		Unclassifiable/Attainment		
Lee County		Unclassifiable/Attainment		
Lexington County		Unclassifiable/Attainment		
Marion County		Unclassifiable/Attainment		
Marlboro County		Unclassifiable/Attainment		
McCormick County		Unclassifiable/Attainment		
Newberry County		Unclassifiable/Attainment		
Oconee County		Unclassifiable/Attainment		
Orangeburg County		Unclassifiable/Attainment		
Pickens County		Unclassifiable/Attainment		
Richland County		Unclassifiable/Attainment		
Saluda County		Unclassifiable/Attainment		
Sumter County		Unclassifiable/Attainment		
Union County		Unclassifiable/Attainment		
Williamsburg County		Unclassifiable/Attainment		
York County (part) remainder		Unclassifiable/Attainment		

[1] This date is July 20, 2012, unless otherwise noted.

[2] Excludes Indian country located in each area, unless otherwise noted.

[3] Includes Indian country of the tribe listed in this table located in the identified area. Information pertaining to areas of Indian country in this table is intended for CAA planning purposes only and is not an EPA determination of Indian country status or any Indian country boundary. EPA lacks the authority to establish Indian country land status, and is making no determination of Indian country boundaries, in this table.

[4] Includes any Indian country in each county or area, unless otherwise specified.

* * * * *

§ 81.342 South Dakota.

South Dakota—SO_2

Designated area	Does not meet primary standards	Does not meet secondary standards	Cannot be classified	Better than national standards
Entire State				X

South Dakota—Carbon Monoxide

Designated Area	Designation		Classification	
	Date [1]	Type	Date [1]	Type
Statewide		Unclassifiable/Attainment		
Aurora County				
Beadle County				
Bennett County				
Bon Homme County				
Brookings County				
Brown County				
Brule County				
Buffalo County				
Butte County				
Campbell County				
Charles Mix County				
Clark County				
Clay County				
Codington County				
Corson County				
Custer County				
Davison County				
Day County				
Deuel County				
Dewey County				
Douglas County				
Edmunds County				
Fall River County				
Faulk County				
Grant County				
Gregory County				
Haakon County				
Hamlin County				
Hand County				
Hanson County				
Harding County				
Hughes County				
Hutchinson County				
Hyde County				
Jackson County				
Jerauld County				
Jones County				
Kingsbury County				
Lake County				
Lawrence County				
Lincoln County				
Lyman County				
Marshall County				
McCook County				
McPherson County				
Meade County				
Mellette County				
Miner County				
Minnehaha County				
Moody County				
Pennington County				
Perkins County				
Potter County				
Roberts County				
Sanborn County				
Shannon County				
Spink County				
Stanley County				
Sully County				
Todd County				

South Dakota—Carbon Monoxide

Designated Area	Designation		Classification	
	Date [1]	Type	Date [1]	Type
Tripp County				
Turner County				
Union County				
Walworth County				
Yankton County				
Ziebach County				

[1] This date is November 15, 1990, unless otherwise noted.

South Dakota—Ozone (1-Hour Standard) [2]

Designated area	Designation		Classification	
	Date [1]	Type	Date [1]	Type
Statewide	.....	Unclassifiable/Attainment		
Aurora County				
Beadle County				
Bennett County				
Bon Homme County				
Brookings County				
Brown County				
Brule County				
Buffalo County				
Butte County				
Campbell County				
Charles Mix County				
Clark County				
Clay County				
Codington County				
Corson County				
Custer County				
Davison County				
Day County				
Deuel County				
Dewey County				
Douglas County				
Edmunds County				
Fall River County				
Faulk County				
Grant County				
Gregory County				
Haakon County				
Hamlin County				
Hand County				
Hanson County				
Harding County				
Hughes County				
Hutchinson County				
Hyde County				
Jackson County				
Jerauld County				
Jones County				
Kingsbury County				
Lake County				
Lawrence County				
Lincoln County				
Lyman County				
Marshall County				
McCook County				
McPherson County				
Meade County				
Mellette County				
Miner County				
Minnehaha County				
Moody County				
Pennington County				
Perkins County				
Potter County				
Roberts County				
Sanborn County				
Shannon County				

South Dakota—Ozone (1-Hour Standard)[2]

Designated area	Designation		Classification	
	Date[1]	Type	Date[1]	Type
Spink County				
Stanley County				
Sully County				
Todd County				
Tripp County				
Turner County				
Union County				
Walworth County				
Yankton County				
Ziebach County				

[1] This date is October 18, 2000, unless otherwise noted.
[2] The 1-hour ozone standard is revoked effective June 15, 2005 for all areas in South Dakota.

South Dakota—PM–10

Designated area	Designation		Classification	
	Date	Type	Date	Type
Rapid City Area	04/05/06	Attainment		
Rest of State[1]	11/15/90	Unclassifiable		

[1] Denotes a single area designation for PSD baseline area purposes.

South Dakota—NO_2 (1971 Annual Standard)

Designated area	Does not meet primary standards	Cannot be classified or better than national standards
Entire State		X

South Dakota—NO_2 (2010 1-Hour Standard)

Designated area	Designation[a]	
	Date[1]	Type
Aurora County		Unclassifiable/Attainment.
Beadle County		Unclassifiable/Attainment.
Bennett County		Unclassifiable/Attainment.
Bon Homme County		Unclassifiable/Attainment.
Brookings County		Unclassifiable/Attainment.
Brown County		Unclassifiable/Attainment.
Brule County		Unclassifiable/Attainment.
Buffalo County		Unclassifiable/Attainment.
Butte County		Unclassifiable/Attainment.
Campbell County		Unclassifiable/Attainment.
Charles Mix County		Unclassifiable/Attainment.
Clark County		Unclassifiable/Attainment.
Clay County		Unclassifiable/Attainment.
Codington County		Unclassifiable/Attainment.
Corson County		Unclassifiable/Attainment.
Custer County		Unclassifiable/Attainment.
Davison County		Unclassifiable/Attainment.
Day County		Unclassifiable/Attainment.
Deuel County		Unclassifiable/Attainment.
Dewey County		Unclassifiable/Attainment.
Douglas County		Unclassifiable/Attainment.
Edmunds County		Unclassifiable/Attainment.
Fall River County		Unclassifiable/Attainment.
Faulk County		Unclassifiable/Attainment.
Grant County		Unclassifiable/Attainment.
Gregory County		Unclassifiable/Attainment.
Haakon County		Unclassifiable/Attainment.
Hamlin County		Unclassifiable/Attainment.
Hand County		Unclassifiable/Attainment.
Hanson County		Unclassifiable/Attainment.
Harding County		Unclassifiable/Attainment.
Hughes County		Unclassifiable/Attainment.
Hutchinson County		Unclassifiable/Attainment.
Hyde County		Unclassifiable/Attainment.

South Dakota—NO_2 (2010 1-Hour Standard)

Designated area	Designation [a]	
	Date [1]	Type
Jackson County		Unclassifiable/Attainment.
Jerauld County		Unclassifiable/Attainment.
Jones County		Unclassifiable/Attainment.
Kingsbury County		Unclassifiable/Attainment.
Lake County		Unclassifiable/Attainment.
Lawrence County		Unclassifiable/Attainment.
Lincoln County		Unclassifiable/Attainment.
Lyman County		Unclassifiable/Attainment.
McCook County		Unclassifiable/Attainment.
McPherson County		Unclassifiable/Attainment.
Marshall County		Unclassifiable/Attainment.
Meade County		Unclassifiable/Attainment.
Mellette County		Unclassifiable/Attainment.
Miner County		Unclassifiable/Attainment.
Minnehaha County		Unclassifiable/Attainment.
Moody County		Unclassifiable/Attainment.
Pennington County		Unclassifiable/Attainment.
Perkins County		Unclassifiable/Attainment.
Potter County		Unclassifiable/Attainment.
Roberts County		Unclassifiable/Attainment.
Sanborn County		Unclassifiable/Attainment.
Shannon County		Unclassifiable/Attainment.
Spink County		Unclassifiable/Attainment.
Stanley County		Unclassifiable/Attainment.
Sully County		Unclassifiable/Attainment.
Todd County		Unclassifiable/Attainment.
Tripp County		Unclassifiable/Attainment.
Turner County		Unclassifiable/Attainment.
Union County		Unclassifiable/Attainment.
Walworth County		Unclassifiable/Attainment.
Yankton County		Unclassifiable/Attainment.
Ziebach County		Unclassifiable/Attainment.

[a] Includes Indian Country located in each county or area, except as otherwise specified.
[1] This date is 90 days after October 31, 2011, unless otherwise noted.

South Dakota—Ozone (8-Hour Standard)

Designated area	Designation [a]		Category/classification	
	Date [1]	Type	Date [1]	Type
Statewide		Unclassifiable/Attainment		
Aurora County		Unclassifiable/Attainment		
Beadle County		Unclassifiable/Attainment		
Bennett County		Unclassifiable/Attainment		
Bon Homme County		Unclassifiable/Attainment		
Brookings County		Unclassifiable/Attainment		
Brown County		Unclassifiable/Attainment		
Brule County		Unclassifiable/Attainment		
Buffalo County		Unclassifiable/Attainment		
Butte County		Unclassifiable/Attainment		
Campbell County		Unclassifiable/Attainment		
Charles Mix County		Unclassifiable/Attainment		
Clark County		Unclassifiable/Attainment		
Clay County		Unclassifiable/Attainment		
Codington County		Unclassifiable/Attainment		
Corson County		Unclassifiable/Attainment		
Custer County		Unclassifiable/Attainment		
Davison County		Unclassifiable/Attainment		
Day County		Unclassifiable/Attainment		
Deuel County		Unclassifiable/Attainment		
Dewey County		Unclassifiable/Attainment		
Douglas County		Unclassifiable/Attainment		
Edmunds County		Unclassifiable/Attainment		
Fall River County		Unclassifiable/Attainment		
Faulk County		Unclassifiable/Attainment		
Grant County		Unclassifiable/Attainment		
Gregory County		Unclassifiable/Attainment		
Haakon County		Unclassifiable/Attainment		
Hamlin County		Unclassifiable/Attainment		
Hand County		Unclassifiable/Attainment		

South Dakota—Ozone (8-Hour Standard)

Designated area	Designation [a]		Category/classification	
	Date [1]	Type	Date [1]	Type
Hanson County		Unclassifiable/Attainment		
Harding County		Unclassifiable/Attainment		
Hughes County		Unclassifiable/Attainment		
Hutchinson County		Unclassifiable/Attainment		
Hyde County		Unclassifiable/Attainment		
Jackson County		Unclassifiable/Attainment		
Jerauld County		Unclassifiable/Attainment		
Jones County		Unclassifiable/Attainment		
Kingsbury County		Unclassifiable/Attainment		
Lake County		Unclassifiable/Attainment		
Lawrence County		Unclassifiable/Attainment		
Lincoln County		Unclassifiable/Attainment		
Lyman County		Unclassifiable/Attainment		
Marshall County		Unclassifiable/Attainment		
McCook County		Unclassifiable/Attainment		
McPherson County		Unclassifiable/Attainment		
Meade County		Unclassifiable/Attainment		
Mellette County		Unclassifiable/Attainment		
Miner County		Unclassifiable/Attainment		
Minnehaha County		Unclassifiable/Attainment		
Moody County		Unclassifiable/Attainment		
Pennington County		Unclassifiable/Attainment		
Perkins County		Unclassifiable/Attainment		
Potter County		Unclassifiable/Attainment		
Roberts County		Unclassifiable/Attainment		
Sanborn County		Unclassifiable/Attainment		
Shannon County		Unclassifiable/Attainment		
Spink County		Unclassifiable/Attainment		
Stanley County		Unclassifiable/Attainment		
Sully County		Unclassifiable/Attainment		
Todd County		Unclassifiable/Attainment		
Tripp County		Unclassifiable/Attainment		
Turner County		Unclassifiable/Attainment		
Union County		Unclassifiable/Attainment		
Walworth County		Unclassifiable/Attainment		
Yankton County		Unclassifiable/Attainment		
Ziebach County		Unclassifiable/Attainment		

[a] Includes Indian Country located in each county or area, except as otherwise specified.
[1] This date is June 15, 2004, unless otherwise noted.

South Dakota—$PM_{2.5}$ (Annual NAAQS)

Designated area	Designation [a]	
	Date [1]	Type
Statewide:		
Aurora County		Unclassifiable/Attainment.
Beadle County		Unclassifiable/Attainment.
Bennett County		Unclassifiable/Attainment.
Bon Homme County		Unclassifiable/Attainment.
Brookings County		Unclassifiable/Attainment.
Brown County		Unclassifiable/Attainment.
Brule County		Unclassifiable/Attainment.
Buffalo County		Unclassifiable/Attainment.
Butte County		Unclassifiable/Attainment.
Campbell County		Unclassifiable/Attainment.
Charles Mix County		Unclassifiable/Attainment.
Clark County		Unclassifiable/Attainment.
Clay County		Unclassifiable/Attainment.
Codington County		Unclassifiable/Attainment.
Corson County		Unclassifiable/Attainment.
Custer County		Unclassifiable/Attainment.
Davison County		Unclassifiable/Attainment.
Day County		Unclassifiable/Attainment.
Deuel County		Unclassifiable/Attainment.
Dewey County		Unclassifiable/Attainment.
Douglas County		Unclassifiable/Attainment.
Edmunds County		Unclassifiable/Attainment.
Fall River County		Unclassifiable/Attainment.
Faulk County		Unclassifiable/Attainment.

South Dakota—$PM_{2.5}$ (Annual NAAQS)

Designated area	Designation [a]	
	Date [1]	Type
Grant County		Unclassifiable/Attainment.
Gregory County		Unclassifiable/Attainment.
Haakon County		Unclassifiable/Attainment.
Hamlin County		Unclassifiable/Attainment.
Hand County		Unclassifiable/Attainment.
Hanson County		Unclassifiable/Attainment.
Harding County		Unclassifiable/Attainment.
Hughes County		Unclassifiable/Attainment.
Hutchinson County		Unclassifiable/Attainment.
Hyde County		Unclassifiable/Attainment.
Jackson County		Unclassifiable/Attainment.
Jerauld County		Unclassifiable/Attainment.
Jones County		Unclassifiable/Attainment.
Kingsbury County		Unclassifiable/Attainment.
Lake County		Unclassifiable/Attainment.
Lawrence County		Unclassifiable/Attainment.
Lincoln County		Unclassifiable/Attainment.
Lyman County		Unclassifiable/Attainment.
McCook County		Unclassifiable/Attainment.
McPherson County		Unclassifiable/Attainment.
Marshall County		Unclassifiable/Attainment.
Meade County		Unclassifiable/Attainment.
Mellette County		Unclassifiable/Attainment.
Miner County		Unclassifiable/Attainment.
Minnehaha County		Unclassifiable/Attainment.
Moody County		Unclassifiable/Attainment.
Pennington County		Unclassifiable/Attainment.
Perkins County		Unclassifiable/Attainment.
Potter County		Unclassifiable/Attainment.
Roberts County		Unclassifiable/Attainment.
Sanborn County		Unclassifiable/Attainment.
Shannon County		Unclassifiable/Attainment.
Spink County		Unclassifiable/Attainment.
Stanley County		Unclassifiable/Attainment.
Sully Count		Unclassifiable/Attainment.
Todd County		Unclassifiable/Attainment.
Tripp County		Unclassifiable/Attainment.
Turner County		Unclassifiable/Attainment.
Union County		Unclassifiable/Attainment.
Walworth County		Unclassifiable/Attainment.
Yankton County		Unclassifiable/Attainment.
Ziebach County		Unclassifiable/Attainment.

[a] Includes Indian Country located in each county or area, except as otherwise specified.
[1] This date is 90 days after January 5, 2005, unless otherwise noted.

South Dakota—$PM_{2.5}$ [24-hour NAAQS]

Designated area	Designation for the 1997 NAAQS [a]		Designation for the 2006 NAAQS [a]	
	Date [1]	Type	Date [2]	Type
Statewide:				
Aurora County		Unclassifiable/Attainment		Unclassifiable/Attainment.
Beadle County		Unclassifiable/Attainment		Unclassifiable/Attainment.
Bennett County		Unclassifiable/Attainment		Unclassifiable/Attainment.
Bon Homme County		Unclassifiable/Attainment		Unclassifiable/Attainment.
Brookings County		Unclassifiable/Attainment		Unclassifiable/Attainment.
Brown County		Unclassifiable/Attainment		Unclassifiable/Attainment.
Brule County		Unclassifiable/Attainment		Unclassifiable/Attainment.
Buffalo County		Unclassifiable/Attainment		Unclassifiable/Attainment.
Butte County		Unclassifiable/Attainment		Unclassifiable/Attainment.
Campbell County		Unclassifiable/Attainment		Unclassifiable/Attainment.

South Dakota—$PM_{2.5}$ [24-hour NAAQS]

Designated area	Designation for the 1997 NAAQS [a]		Designation for the 2006 NAAQS [a]	
	Date [1]	Type	Date [2]	Type
Charles Mix County		Unclassifiable/Attainment		Unclassifiable/Attainment.
Clark County		Unclassifiable/Attainment		Unclassifiable/Attainment.
Clay County		Unclassifiable/Attainment		Unclassifiable/Attainment.
Codington County		Unclassifiable/Attainment		Unclassifiable/Attainment.
Croson County		Unclassifiable/Attainment		Unclassifiable/Attainment.
Custer County		Unclassifiable/Attainment		Unclassifiable/Attainment.
Davison County		Unclassifiable/Attainment		Unclassifiable/Attainment.
Day County		Unclassifiable/Attainment		Unclassifiable/Attainment.
Deuel County		Unclassifiable/Attainment		Unclassifiable/Attainment.
Dewey County		Unclassifiable/Attainment		Unclassifiable/Attainment.
Douglas County		Unclassifiable/Attainment		Unclassifiable/Attainment.
Edmunds County		Unclassifiable/Attainment		Unclassifiable/Attainment.
Fall River County		Unclassifiable/Attainment		Unclassifiable/Attainment.
Faulk County		Unclassifiable/Attainment		Unclassifiable/Attainment.
Grant County		Unclassifiable/Attainment		Unclassifiable/Attainment.
Gregory County		Unclassifiable/Attainment		Unclassifiable/Attainment.
Haakon County		Unclassifiable/Attainment		Unclassifiable/Attainment.
Hamlin County		Unclassifiable/Attainment		Unclassifiable/Attainment.
Hand County		Unclassifiable/Attainment		Unclassifiable/Attainment.
Hanson County		Unclassifiable/Attainment		Unclassifiable/Attainment.
Harding County		Unclassifiable/Attainment		Unclassifiable/Attainment.
Hughes County		Unclassifiable/Attainment		Unclassifiable/Attainment.
Hutchinson County		Unclassifiable/Attainment		Unclassifiable/Attainment.
Hyde County		Unclassifiable/Attainment		Unclassifiable/Attainment.
Jackson County		Unclassifiable/Attainment		Unclassifiable/Attainment.
Jerauld County		Unclassifiable/Attainment		Unclassifiable/Attainment.
Jones County		Unclassifiable/Attainment		Unclassifiable/Attainment.
Kingsbury County		Unclassifiable/Attainment		Unclassifiable/Attainment.
Lake County		Unclassifiable/Attainment		Unclassifiable/Attainment.
Lawrence County		Unclassifiable/Attainment		Unclassifiable/Attainment.
Lincoln County		Unclassifiable/Attainment		Unclassifiable/Attainment.
Lyman County		Unclassifiable/Attainment		Unclassifiable/Attainment.
McCook County		Unclassifiable/Attainment		Unclassifiable/Attainment.
McPherson County		Unclassifiable/Attainment		Unclassifiable/Attainment.
Marshall County		Unclassifiable/Attainment		Unclassifiable/Attainment.

South Dakota—$PM_{2.5}$ [24-hour NAAQS]

Designated area	Designation for the 1997 NAAQS [a]		Designation for the 2006 NAAQS [a]	
	Date [1]	Type	Date [2]	Type
Meade County		Unclassifiable/Attainment		Unclassifiable/Attainment.
Mellette County		Unclassifiable/Attainment		Unclassifiable/Attainment.
Miner County		Unclassifiable/Attainment		Unclassifiable/Attainment.
Minnehaha County		Unclassifiable/Attainment		Unclassifiable/Attainment.
Moody County		Unclassifiable/Attainment		Unclassifiable/Attainment.
Pennington County		Unclassifiable/Attainment		Unclassifiable/Attainment.
Perkins County		Unclassifiable/Attainment		Unclassifiable/Attainment.
Potter County		Unclassifiable/Attainment		Unclassifiable/Attainment.
Roberts County		Unclassifiable/Attainment		Unclassifiable/Attainment.
Sanborn County		Unclassifiable/Attainment		Unclassifiable/Attainment.
Shannon County		Unclassifiable/Attainment		Unclassifiable/Attainment.
Spink County		Unclassifiable/Attainment		Unclassifiable/Attainment.
Stanley County		Unclassifiable/Attainment		Unclassifiable/Attainment.
Sully County		Unclassifiable/Attainment		Unclassifiable/Attainment.
Todd County		Unclassifiable/Attainment		Unclassifiable/Attainment.
Tripp County		Unclassifiable/Attainment		Unclassifiable/Attainment.
Turner County		Unclassifiable/Attainment		Unclassifiable/Attainment.
Union County		Unclassifiable/Attainment		Unclassifiable/Attainment.
Walworth County		Unclassifiable/Attainment		Unclassifiable/Attainment.
Yankton County		Unclassifiable/Attainment		Unclassifiable/Attainment.
Ziebach County		Unclassifiable/Attainment		Unclassifiable/Attainment.

[a] Includes Indian Country located in each county or area, except as otherwise specified.
[1] This date is 90 days after January 5, 2005, unless otherwise noted.
[2] This date is 30 days after November 13, 2009, unless otherwise noted.

South Dakota—2008 Lead NAAQS

Designated area	Designation for the 2008 NAAQS[a]	
	Date [1]	Type
Whole State		Unclassifiable/Attainment.

[a] Includes Indian Country located in each county or area, except as otherwise specified.
[1] December 31, 2011 unless otherwise noted.

[36 FR 22421, Nov. 25, 1971, as amended at 56 FR 56825, Nov. 6, 1991; 60 FR 55798, Nov. 3, 1995; 61 FR 24242, May 14, 1996; 63 FR 31078, June 5, 1998; 65 FR 45258, July 20, 2000; 69 FR 23933, Apr. 30, 2004; 70 FR 1002, Jan. 5, 2005; 70 FR 44477, Aug. 3, 2005; 71 FR 11163, Mar. 6, 2006; 74 FR 58761, Nov. 13, 2009; 76 FR 72116, Nov. 22, 2011; 76 FR 76048, Dec. 6, 2011; 77 FR 9577, Feb. 17, 2012]

EFFECTIVE DATE NOTE: At 77 FR 30145, May 21, 2012, § 81.342 was amended by revising the table heading for ''South Dakota—Ozone (8-Hour Standard)'' to read ''South Dakota—1997 8-Hour Ozone NAAQS (Primary and Secondary)''; by adding a new table entitled ''South Dakota—2008 8-Hour Ozone NAAQS (Primary and Secondary)'' following the newly designated table ''South Dakota—1997 8-Hour Ozone NAAQS (Primary and Secondary)'', effective July 20, 2012. For the convenience of the user, the added text is set forth as follows:

§ 81.342 South Dakota.

* * * * *

South Dakota—2008 8-Hour Ozone NAAQS (Primary and secondary)

Designated area	Designation		Classification	
	Date [1]	Type	Date [1]	Type
Statewide and Any Areas of Indian Country:		Unclassifiable/Attainment		

[1] This date is July 20, 2012, unless otherwise noted.

* * * * *

§ 81.343 Tennessee.

Tennessee—TSP

Designated area	Does not meet primary standards	Does not meet secondary standards	Cannot be classified	Better than national standards
Anderson County				X
Bedford County				X
Benton County				X
Bledsoe County				X
Blount County				X
Bradley County				X
Campbell County				X
Rest of Campbell County				X
Cannon County				X
Carroll County				X
Carter County				X
Cheatham County				X
Chester County				X
Claiborne County				X
Clay County				X
Cocke County				X
Coffee County				X
Crockett County				X
Cumberland County				X
Those portions of Davidson County within a section of downtown Nashville and in West Nashville		X		
Rest of Davidson County				X
Decatur County				X
DeKalb County				X
Dickson County				X
Dyer County				X
Fayette County				X
Fentress County				X
Franklin County				X
Gibson County				X
Giles County				X
Grainger County				X
Greene County				X
Grundy County				X
Hamblen County				X
That portion of Hamilton County within approximately the city limits of Chattanooga		X		
Rest of Hamilton County				X
Hancock County				X
Hardeman County				X
Hardin County				X
Hawkins County				X
Haywood County				X
Henderson County				X
Henry County				X
Hickman County				X
Houston County				X
Humphreys County				X
Jackson County				X
Jefferson County				X
Johnson County				X

Tennessee—TSP

Designated area	Does not meet primary standards	Does not meet secondary standards	Cannot be classified	Better than national standards
That portion of Knox County within a section of downtown Knoxville				X
Rest of Knox County				X
Lake County				X
Lauderdale County				X
Lawrence County				X
Lewis County				X
Lincoln County				X
Loudon County				X
McMinn County				X
McNairy County				X
Macon County				X
Madison County				X
Marion County				X
Marshall County				X
That portion of Maury County within the northern section of Columbia			X	
Rest of Maury County				X
Meigs County				X
Monroe County				X
Montgomery County				X
Moore County				X
Morgan County				X
Obion County				X
Overton County				X
Perry County				X
Pickett County				X
Polk County				X
Putnam County				X
Rhea County				X
Roane County				X
Robertson County				X
Rutherford County				X
Scott County				X
Sequatchie County				X
Sevier County				X
Shelby County				X
Smith County				X
Stewart County				X
Sullivan County				X
Sumner County				X
Tipton County				X
Trousdale County				X
Unicoi County				X
Union County				X
Van Buren County				X
Warren County				X
Washington County				X
Wayne County				X
Weakley County				X
White County				X
Wilson County				X
Williamson County				X

Tennessee—SO_2

Designated area	Does not meet primary standards	Does not meet secondary standards	Cannot be classified	Better than national standards
Anderson County				X
Bedford County				X
That portion of Benton County surrounding TVA's Johnsonville plant				X
Rest of Benton County				X
Bledsoe County				X
Blount County				X
Bradley County				X
Campbell County				X

Tennessee—SO_2

Designated area	Does not meet primary standards	Does not meet secondary standards	Cannot be classified	Better than national standards
Cannon County				X
Carroll County				X
Carter County				X
Cheatham County				X
Chester County				X
Claiborne County				X
Clay County				X
Cocke County				X
Coffee County				X
Crockett County				X
Cumberland County				X
Davidson County				X
Decatur County				X
DeKalb County				X
Dickson County				X
Dyer County				X
Fayette County				X
Fentress County				X
Franklin County				X
Gibson County				X
Giles County				X
Grainger County				X
Greene County				X
Grundy County				X
Hamblen County				X
Hamilton County				X
Hancock County				X
Hardeman County				X
Hardin County				X
Hawkins County				X
Haywood County				X
Henderson County				X
Henry County				X
Hickman County				X
Houston County				X
That portion of Humphreys County surrounding TVA's Johnsonville plant				X
Rest of Humphreys County				X
Jackson County				X
Jefferson County				X
Johnson County				X
Knox County				X
Lake County				X
Lauderdale County				X
Lawrence County				X
Lewis County				X
Lincoln County				X
Loudon County				X
McMinn County				X
McNairy County				X
Macon County				X
Madison County				X
Marion County				X
Marshall County				X
Maury County				X
Meigs County				X
Monroe County				X
Montgomery County				X
Moore County				X
Morgan County				X
Obion County				X
Overton County				X
Perry County				X
Pickett County				X
Polk County				X
Putnam County				X
Rhea County				X
Roane County				X
Robertson County				X
Rutherford County				X

Tennessee—SO_2

Designated area	Does not meet primary standards	Does not meet secondary standards	Cannot be classified	Better than national standards
Scott County				X
Sequatchie County				X
Sevier County				X
Shelby County				X
Smith County				X
Stewart County				X
Sullivan County				X
Sumner County				X
Tipton County				X
Trousdale County				X
Unicoi County				X
Union County				X
Van Buren County				X
Warren County				X
Washington County				X
Wayne County				X
Weakley County				X
White County				X
Williamson County				X
Wilson County				X

Tennessee—Carbon Monoxide

Designated Area	Designation		Classification	
	Date [1]	Type	Date [1]	Type
Statewide				
Anderson County		Unclassifiable/Attainment		
Bedford County.				
Benton County.				
Bledsoe County.				
Blount County.				
Bradley County.				
Campbell County.				
Cannon County.				
Carroll County.				
Carter County.				
Cheatham County.				
Chester County.				
Claiborne County.				
Clay County.				
Cocke County.				
Coffee County.				
Crockett County.				
Cumberland County.				
Davidson County.				
De Kalb County.				
Decatur County.				
Dickson County.				
Dyer County.				
Fayette County.				
Fentress County.				
Franklin County.				
Gibson County.				
Giles County.				
Grainger County.				
Greene County.				
Grundy County.				
Hamblen County.				
Hamilton County.				
Hancock County.				
Hardeman County.				
Hardin County.				
Hawkins County.				
Haywood County.				
Henderson County.				
Henry County.				
Hickman County.				
Houston County.				

Tennessee—Carbon Monoxide

Designated Area	Designation		Classification	
	Date [1]	Type	Date [1]	Type
Humphreys County.				
Jackson County.				
Jefferson County.				
Johnson County.				
Knox County.				
Lake County.				
Lauderdale County.				
Lawrence County.				
Lewis County.				
Lincoln County.				
Loudon County.				
Macon County.				
Madison County.				
Marion County.				
Marshall County.				
Maury County.				
McMinn County.				
McNairy County.				
Meigs County.				
Monroe County.				
Montgomery County.				
Moore County.				
Morgan County.				
Obion County.				
Overton County.				
Perry County.				
Pickett County.				
Polk County.				
Putnam County.				
Rhea County.				
Roane County.				
Robertson County.				
Rutherford County.				
Scott County.				
Sequatchie County.				
Sevier County.				
Shelby County	9/26/94			
Smith County.				
Stewart County.				
Sullivan County.				
Sumner County.				
Tipton County.				
Trousdale County.				
Unicoi County.				
Union County.				
Van Buren County.				
Warren County.				
Washington County.				
Wayne County.				
Weakley County.				
White County.				
Williamson County.				
Wilson County.				

[1] This date is November 15, 1990, unless otherwise noted.

Tennessee—Ozone (1-Hour Standard)[2]

Designated area	Designation		Classification	
	Date [1]	Type	Date [1]	Type
Jefferson County Area:				
Jefferson County	11/15/90	Unclassifiable/Attainment	11/15/90	
Statewide		Unclassifiable/Attainment		
Anderson County				
Bedford County				
Benton County				
Bledsoe County				
Blount County				
Bradley County				
Campbell County				

Tennessee—Ozone (1-Hour Standard)[2]

Designated area	Designation		Classification	
	Date [1]	Type	Date [1]	Type
Cannon County				
Carroll County				
Carter County				
Cheatham County				
Chester County				
Claiborne County				
Clay County				
Cocke County				
Coffee County				
Crockett County				
Cumberland County				
DeKalb County				
Decatur County				
Dickson County				
Davidson County				
Dyer County				
Fayette County				
Fentress County				
Franklin County				
Gibson County				
Giles County				
Grainger County				
Greene County				
Grundy County				
Hamblen County				
Hamilton County				
Hancock County				
Hardeman County				
Hardin County				
Hawkins County				
Haywood County				
Henderson County				
Henry County				
Hickman County				
Houston County				
Humphreys County				
Jackson County				
Johnson County				
Knox County				
Lake County				
Lauderdale County				
Lawrence County				
Lewis County				
Lincoln County				
Loudon County				
Macon County				
Madison County				
Marion County				
Marshall County				
Maury County				
McMinn County				
McNairy County				
Meigs County				
Monroe County				
Montgomery County				
Moore County				
Morgan County				
Obion County				
Overton County				
Perry County				
Pickett County				
Polk County				
Putnam County				
Rhea County				
Roane County				
Robertson County				
Rutherford County				
Scott County				
Sequatchie County				
Sevier County				
Shelby County				

Tennessee—Ozone (1-Hour Standard)[2]

Designated area	Designation		Classification	
	Date [1]	Type	Date [1]	Type
Smith County				
Stewart County				
Sullivan County				
Sumner County				
Tipton County				
Trousdale County				
Unicoi County				
Union County				
Van Buren County				
Warren County				
Washington County				
Wayne County				
Weakley County				
White County				
Williamson County				
Wilson County				

[1] This date is October 18, 2000, unless otherwise noted.
[2] The 1-hour ozone standard is revoked effective June 15, 2005 for all areas in Tennessee except the Chattanooga, Johnson City-Kingsport-Bristol, and Nashville areas where it is revoked effective April 15, 2009.

Tennessee—NO_2 (1971 Annual Standard)

Designated area	Does not meet primary standards	Cannot be classified or better than national standards
Statewide	.....	x

Tennessee—NO_2 (2010 1-Hour Standard)

Designated area	Designation [a]	
	Date [1]	Type
Bradley County	.....	Unclassifiable/Attainment.
Davidson County	.....	Unclassifiable/Attainment.
McMinn County	.....	Unclassifiable/Attainment.
Sullivan County	.....	Unclassifiable/Attainment.
Rest of State	.....	Unclassifiable/Attainment.

[a] Includes Indian Country located in each county or area, except as otherwise specified.
[1] This date is 90 days after October 31, 2011, unless otherwise noted.

Tennessee—Ozone (8-Hour Standard)

Designated area	Designation [a]		Category/classification	
	Date [1]	Type	Date [1]	Type
Chattanooga, TN–GA:				
Hamilton County	(2)	Attainment.		
Meigs County	(2)	Attainment.		
Clarkesville-Hopkinsville, TN-KY:				
Montgomery County	11/21/05	Attainment		
Johnson City-Kingsport-Bristol, TN:				
Hawkins County	(2)	Attainment.		
Sullivan County	(2)	Attainment.		
Knoxville, TN:				
Anderson County	This action is effective 3/8/2011	Attainment	.....	
Blount County	This action is effective 3/8/2011	Attainment	.....	
Cocke County (part)	This action is effective 3/8/2011	Attainment	.....	
(Great Smoky Mtn Park)	.....		.....	

Tennessee—Ozone (8-Hour Standard)

Designated area	Designation [a]		Category/classification	
	Date [1]	Type	Date [1]	Type
Jefferson County	This action is effective 3/8/2011	Attainment	.....	
Knox County	This action is effective 3/8/2011	Attainment	.....	
Loudon County	This action is effective 3/8/2011	Attainment	.....	
Sevier County	This action is effective 3/8/2011	Attainment.		
Memphis, TN–AR: Shelby County	January 4, 2010	Attainment	.....	
Nashville, TN:				
Davidson County	(2)	Attainment.		
Rutherford County	(2)	Attainment.		
Sumner County	(2)	Attainment.		
Williamson County	(2)	Attainment.		
Wilson County	(2)	Attainment.		
Rest of State	.....	Unclassifiable/Attainment		
Bedford County				
Benton County				
Bledsoe County				
Bradley County				
Campbell County				
Cannon County				
Carroll County				
Carter County				
Cheatham County				
Chester County				
Claiborne County				
Clay County				
Cocke County (part) remainder				
Coffee County				
Crockett County				
Cumberland County				
Decatur County				
DeKalb County				
Dickson County				
Dyer County				
Fayette County				
Fentress County				
Franklin County				
Gibson County				
Giles County				
Grainger County				
Greene County				
Grundy County				
Hamblen County				
Hancock County				
Hardeman County				
Hardin County				
Haywood County				
Henderson County				
Henry County				
Hickman County				
Houston County				
Humphreys County				
Jackson County				
Johnson County				
Lake County				
Lauderdale County				
Lawrence County				
Lewis County				
Lincoln County				
Macon County				

Tennessee—Ozone (8-Hour Standard)

Designated area	Designation [a]		Category/classification	
	Date [1]	Type	Date [1]	Type
Madison County				
Marion County				
Marshall County				
Maury County				
McMinn County				
McNairy County				
Monroe County				
Moore County				
Morgan County				
Obion County				
Overton County				
Perry County				
Pickett County				
Polk County				
Putnam County				
Rhea County				
Roane County				
Robertson County				
Scott County				
Sequatchie County				
Smith County				
Stewart County				
Tipton County				
Trousdale County				
Unicoi County				
Union County				
Van Buren County				
Warren County				
Washington County				
Wayne County				
Weakley County				
White County				

[a] Includes Indian Country located in each county or area, except as otherwise specified.
[1] This date is June 15, 2004, unless otherwise noted.
[2] Effective April 15, 2008.

Tennessee—$PM_{2.5}$ (Annual NAAQS)

Designated area	Designation [a]	
	Date [1]	Type
Chattanooga, TN-GA:		
Hamilton County		Nonattainment.
Knoxville, TN:		
Anderson County		Nonattainment.
Blount County		Nonattainment.
Knox County		Nonattainment.
Loudon County		Nonattainment.
Roane County (part)		Nonattainment.
The area described by U.S. Census 2000 block group identifier 47–145–0307–2.		
McMinn County, TN:		
McMinn County		Unclassifiable/Attainment.
Rest of State:		
Bedford County		Unclassifiable/Attainment.
Benton County		Unclassifiable/Attainment.
Bledsoe County		Unclassifiable/Attainment.
Bradley County		Unclassifiable/Attainment.
Campbell County		Unclassifiable/Attainment.
Cannon County		Unclassifiable/Attainment.
Carroll County		Unclassifiable/Attainment.
Carter County		Unclassifiable/Attainment.
Cheatham County		Unclassifiable/Attainment.
Chester County		Unclassifiable/Attainment.
Claiborne County		Unclassifiable/Attainment.
Clay County		Unclassifiable/Attainment.
Cocke County		Unclassifiable/Attainment.
Coffee County		Unclassifiable/Attainment.
Crockett County		Unclassifiable/Attainment.
Cumberland County		Unclassifiable/Attainment.

Tennessee—$PM_{2.5}$ (Annual NAAQS)

Designated area	Designation [a]	
	Date [1]	Type
Davidson County		Unclassifiable/Attainment.
Decatur County		Unclassifiable/Attainment.
DeKalb County		Unclassifiable/Attainment.
Dickson County		Unclassifiable/Attainment.
Dyer County		Unclassifiable/Attainment.
Fayette County		Unclassifiable/Attainment.
Fentress County		Unclassifiable/Attainment.
Franklin County		Unclassifiable/Attainment.
Gibson County		Unclassifiable/Attainment.
Giles County		Unclassifiable/Attainment.
Grainger County		Unclassifiable/Attainment.
Greene County		Unclassifiable/Attainment.
Grundy County		Unclassifiable/Attainment.
Hamblen County		Unclassifiable/Attainment.
Hancock County		Unclassifiable/Attainment.
Hardeman County		Unclassifiable/Attainment.
Hardin County		Unclassifiable/Attainment.
Hawkins County		Unclassifiable/Attainment.
Haywood County		Unclassifiable/Attainment.
Henderson County		Unclassifiable/Attainment.
Henry County		Unclassifiable/Attainment.
Hickman County		Unclassifiable/Attainment.
Houston County		Unclassifiable/Attainment.
Humphreys County		Unclassifiable/Attainment.
Jackson County		Unclassifiable/Attainment.
Jefferson County		Unclassifiable/Attainment.
Johnson County		Unclassifiable/Attainment.
Lake County		Unclassifiable/Attainment.
Lauderdale County		Unclassifiable/Attainment.
Lawrence County		Unclassifiable/Attainment.
Lewis County		Unclassifiable/Attainment.
Lincoln County		Unclassifiable/Attainment.
McNairy County		Unclassifiable/Attainment.
Macon County		Unclassifiable/Attainment.
Madison County		Unclassifiable/Attainment.
Marion County		Unclassifiable/Attainment.
Marshall County		Unclassifiable/Attainment.
Maury County		Unclassifiable/Attainment.
Meigs County		Unclassifiable/Attainment.
Monroe County		Unclassifiable/Attainment.
Montgomery County		Unclassifiable/Attainment.
Moore County		Unclassifiable/Attainment.
Morgan County		Unclassifiable/Attainment.
Obion County		Unclassifiable/Attainment.
Overton County		Unclassifiable/Attainment.
Perry County		Unclassifiable/Attainment.
Pickett County		Unclassifiable/Attainment.
Polk County		Unclassifiable/Attainment.
Putnam County		Unclassifiable/Attainment.
Rhea County		Unclassifiable/Attainment.
Roane County (remainder)		Unclassifiable/Attainment.
Robertson County		Unclassifiable/Attainment.
Rutherford County		Unclassifiable/Attainment.
Scott County		Unclassifiable/Attainment.
Sequatchie County		Unclassifiable/Attainment.
Sevier County		Unclassifiable/Attainment.
Shelby County		Unclassifiable/Attainment.
Smith County		Unclassifiable/Attainment.
Stewart County		Unclassifiable/Attainment.
Sullivan County		Unclassifiable/Attainment.
Sumner County		Unclassifiable/Attainment.
Tipton County		Unclassifiable/Attainment.
Trousdale County		Unclassifiable/Attainment.
Unicoi County		Unclassifiable/Attainment.
Union County		Unclassifiable/Attainment.
Van Buren County		Unclassifiable/Attainment.
Warren County		Unclassifiable/Attainment.
Washington County		Unclassifiable/Attainment.
Wayne County		Unclassifiable/Attainment.
Weakley County		Unclassifiable/Attainment.
White County		Unclassifiable/Attainment.

Tennessee—$PM_{2.5}$ (Annual NAAQS)

Designated area	Designation [a]	
	Date [1]	Type
Williamson County		Unclassifiable/Attainment.
Wilson County		Unclassifiable/Attainment.

[a] Includes Indian Country located in each county or area, except as otherwise specified.
[1] This date is 90 days after January 5, 2005, unless otherwise noted.

Tennessee—$PM_{2.5}$ [24-hour NAAQS]

Designated area	Designation for the 1997 NAAQS [a]		Designation for the 2006 NAAQS [a]	
	Date [1]	Type	Date [2]	Type
Knoxville-Sevierville-La Follette, TN:				
Anderson County		Unclassifiable/Attainment		Nonattainment.
Blount County		Unclassifiable/Attainment		Nonattainment.
Knox County		Unclassifiable/Attainment		Nonattainment.
Loudon County		Unclassifiable/Attainment		Nonattainment.
Roane County (part)		Unclassifiable/Attainment		Nonattainment.
The area described by U.S. Census 2000 block group identifier 47–145–0307–2.				
Rest of State:				
Bedford County		Unclassifiable/Attainment		Unclassifiable/Attainment.
Benton County		Unclassifiable/Attainment		Unclassifiable/Attainment.
Bledsoe County		Unclassifiable/Attainment		Unclassifiable/Attainment.
Bradley County		Unclassifiable/Attainment		Unclassifiable/Attainment.
Campbell County		Unclassifiable/Attainment		Unclassifiable/Attainment.
Cannon County		Unclassifiable/Attainment		Unclassifiable/Attainment.
Carroll County		Unclassifiable/Attainment		Unclassifiable/Attainment.
Carter County		Unclassifiable/Attainment		Unclassifiable/Attainment.
Cheatham County		Unclassifiable/Attainment		Unclassifiable/Attainment.
Chester County		Unclassifiable/Attainment		Unclassifiable/Attainment.
Claiborne County		Unclassifiable/Attainment		Unclassifiable/Attainment.
Clay County		Unclassifiable/Attainment		Unclassifiable/Attainment.
Cocke County		Unclassifiable/Attainment		Unclassifiable/Attainment.
Coffee County		Unclassifiable/Attainment		Unclassifiable/Attainment.
Crockett County		Unclassifiable/Attainment		Unclassifiable/Attainment.
Cumberland County		Unclassifiable/Attainment		Unclassifiable/Attainment.
Davidson County		Unclassifiable/Attainment		Unclassifiable/Attainment.
Decatur County		Unclassifiable/Attainment		Unclassifiable/Attainment.
DeKalb County		Unclassifiable/Attainment		Unclassifiable/Attainment.
Dickson County		Unclassifiable/Attainment		Unclassifiable/Attainment.
Dyer County		Unclassifiable/Attainment		Unclassifiable/Attainment.
Fayette County		Unclassifiable/Attainment		Unclassifiable/Attainment.

Tennessee—$PM_{2.5}$ [24-hour NAAQS]

Designated area	Designation for the 1997 NAAQS [a]		Designation for the 2006 NAAQS [a]	
	Date [1]	Type	Date [2]	Type
Fentress County		Unclassifiable/Attainment		Unclassifiable/Attainment.
Franklin County		Unclassifiable/Attainment		Unclassifiable/Attainment.
Gibson County		Unclassifiable/Attainment		Unclassifiable/Attainment.
Giles County		Unclassifiable/Attainment		Unclassifiable/Attainment.
Grainger County		Unclassifiable/Attainment		Unclassifiable/Attainment.
Greene County		Unclassifiable/Attainment		Unclassifiable/Attainment.
Grundy County		Unclassifiable/Attainment		Unclassifiable/Attainment.
Hamblen County		Unclassifiable/Attainment		Unclassifiable/Attainment.
Hamilton County		Unclassifiable/Attainment		Unclassifiable/Attainment.
Hancock County		Unclassifiable/Attainment		Unclassifiable/Attainment.
Hardeman County		Unclassifiable/Attainment		Unclassifiable/Attainment.
Hardin County		Unclassifiable/Attainment		Unclassifiable/Attainment.
Hawkins County		Unclassifiable/Attainment		Unclassifiable/Attainment.
Haywood County		Unclassifiable/Attainment		Unclassifiable/Attainment.
Henderson County		Unclassifiable/Attainment		Unclassifiable/Attainment.
Henry County		Unclassifiable/Attainment		Unclassifiable/Attainment.
Hickman County		Unclassifiable/Attainment		Unclassifiable/Attainment.
Houston County		Unclassifiable/Attainment		Unclassifiable/Attainment.
Humphreys County		Unclassifiable/Attainment		Unclassifiable/Attainment.
Jackson County		Unclassifiable/Attainment		Unclassifiable/Attainment.
Jefferson County		Unclassifiable/Attainment		Unclassifiable/Attainment.
Johnson County		Unclassifiable/Attainment		Unclassifiable/Attainment.
Lake County		Unclassifiable/Attainment		Unclassifiable/Attainment.
Lauderdale County		Unclassifiable/Attainment		Unclassifiable/Attainment.
Lawrence County		Unclassifiable/Attainment		Unclassifiable/Attainment.
Lewis County		Unclassifiable/Attainment		Unclassifiable/Attainment.
Lincoln County		Unclassifiable/Attainment		Unclassifiable/Attainment.
McMinn County		Unclassifiable/Attainment		Unclassifiable/Attainment.
McNairy County		Unclassifiable/Attainment		Unclassifiable/Attainment.
Macon County		Unclassifiable/Attainment		Unclassifiable/Attainment.
Madison County		Unclassifiable/Attainment		Unclassifiable/Attainment.
Marion County		Unclassifiable/Attainment		Unclassifiable/Attainment.
Marshall County		Unclassifiable/Attainment		Unclassifiable/Attainment.
Maury County		Unclassifiable/Attainment		Unclassifiable/Attainment.
Meigs County		Unclassifiable/Attainment		Unclassifiable/Attainment.

Tennessee—$PM_{2.5}$ [24-hour NAAQS]

Designated area	Designation for the 1997 NAAQS [a]		Designation for the 2006 NAAQS [a]	
	Date [1]	Type	Date [2]	Type
Monroe County		Unclassifiable/Attainment		Unclassifiable/Attainment.
Montgomery County		Unclassifiable/Attainment		Unclassifiable/Attainment.
Moore County		Unclassifiable/Attainment		Unclassifiable/Attainment.
Morgan County		Unclassifiable/Attainment		Unclassifiable/Attainment.
Obion County		Unclassifiable/Attainment		Unclassifiable/Attainment.
Overton County		Unclassifiable/Attainment		Unclassifiable/Attainment.
Perry County		Unclassifiable/Attainment		Unclassifiable/Attainment.
Pickett County		Unclassifiable/Attainment		Unclassifiable/Attainment.
Polk County		Unclassifiable/Attainment		Unclassifiable/Attainment.
Putnam County		Unclassifiable/Attainment		Unclassifiable/Attainment.
Rhea County		Unclassifiable/Attainment		Unclassifiable/Attainment.
Roane County (remainder)		Unclassifiable/Attainment		Unclassifiable/Attainment.
Robertson County		Unclassifiable/Attainment		Unclassifiable/Attainment.
Rutherford County		Unclassifiable/Attainment		Unclassifiable/Attainment.
Scott County.		Unclassifiable/Attainment		Unclassifiable/Attainment.
Sequatchie County		Unclassifiable/Attainment		Unclassifiable/Attainment.
Sevier County		Unclassifiable/Attainment		Unclassifiable/Attainment.
Shelby County		Unclassifiable/Attainment		Unclassifiable/Attainment.
Smith County		Unclassifiable/Attainment		Unclassifiable/Attainment.
Stewart County		Unclassifiable/Attainment		Unclassifiable/Attainment.
Sullivan County		Unclassifiable/Attainment		Unclassifiable/Attainment.
Sumner County		Unclassifiable/Attainment		Unclassifiable/Attainment.
Tipton County		Unclassifiable/Attainment		Unclassifiable/Attainment.
Trousdale County		Unclassifiable/Attainment		Unclassifiable/Attainment.
Unicoi County		Unclassifiable/Attainment		Unclassifiable/Attainment.
Union County		Unclassifiable/Attainment		Unclassifiable/Attainment.
Van Buren County		Unclassifiable/Attainment		Unclassifiable/Attainment.
Warren County		Unclassifiable/Attainment		Unclassifiable/Attainment.
Washington County		Unclassifiable/Attainment		Unclassifiable/Attainment.
Wayne County		Unclassifiable/Attainment		Unclassifiable/Attainment.
Weakley County		Unclassifiable/Attainment		Unclassifiable/Attainment.
White County		Unclassifiable/Attainment		Unclassifiable/Attainment.
Williamson County		Unclassifiable/Attainment		Unclassifiable/Attainment.
Wilson County		Unclassifiable/Attainment		Unclassifiable/Attainment.

[a] Includes Indian Country located in each county or area, except as otherwise specified.
[1] This date is 90 days after January 5, 2005, unless otherwise noted.

[2] This date is 30 days after November 13, 2009, unless otherwise noted.

Tennessee—1978 Lead NAAQS

Designated area	Designation		Classification	
	Date	Type	Date	Type
Shelby County (part)	7/2/01	Attainment		
Area encompassed by a circle with a ¾ mile radius with center being the intersection of Castex and Mallory Avenue, Memphis, TN.				
Williamson County (part)	9/10/99	Attainment		
Area encompassed by a circle centered on Universal Transverse Mercator coordinate 530.38 E, 3961.60 N (Zone 16) with a radius of 1.5 kilometers.				
Fayette County (part)	10/17/95	Attainment		
Area encompassed by a circle centered on Universal Transverse Mercator coordinate 267.59 E, 3881.30 N (Zone 16) with a radius of 1.0 kilometers.				
Rest of State Not Designated.				

Tennessee—2008 Lead NAAQS

Designated area	Designation for the 2008 NAAQS [a]	
	Date [1]	Type
Bristol, TN:		
Sullivan County (part)	12/31/10	Nonattainment.
Area is bounded by a 1.25 km radius surrounding the UTM coordinates 4042923 meters E, 386267 meters N, Zone 17, which surrounds the Exide Technologies Facility.		
Knox County, TN:		
Knox County		Unclassifiable.
Rest of State		Unclassifiable/Attainment.

[a] Includes Indian Country located in each county or area, except as otherwise specified.
[1] December 31, 2011 unless otherwise noted.

[43 FR 8964, Mar. 3, 1978]

EDITORIAL NOTE: For FEDERAL REGISTER citations affecting § 81.343, see the List of CFR Sections Affected, which appears in the Finding Aids section of the printed volume and at *www.fdsys.gov*.

EFFECTIVE DATE NOTE: At 77 FR 30145, May 21, 2012, § 81.343 was amended by revising the table heading for ''Tennessee—Ozone (8-Hour Standard)'' to read ''Tennessee—1997 8-Hour Ozone NAAQS (Primary and Secondary)''; by adding a new table entitled ''Tennessee—2008 8-Hour Ozone NAAQS (Primary and Secondary)'' following the newly designated table ''Tennessee—1997 8-Hour Ozone NAAQS (Primary and Secondary)'', effective July 20, 2012. For the convenience of the user, the added text is set forth as follows:

§ 81.343 Tennessee.

* * * * *

Tennessee—2008 8-Hour Ozone NAAQS (Primary and secondary)

Designated area	Designation		Classification	
	Date [1]	Type	Date [1]	Type
Knoxville, TN: [2]		Nonattainment		Marginal.
Anderson County (part)				
2000 Census tracts: 202, 213.02				
Blount County				
Knox County				
Memphis, TN-MS-AR: [2]		Nonattainment		Marginal.
Shelby County				
Rest of State: [3]		Unclassifiable/Attainment		
Anderson County (part) remainder		Unclassifiable/Attainment		
Bedford County		Unclassifiable/Attainment		
Benton County		Unclassifiable/Attainment		
Bledsoe County		Unclassifiable/Attainment		

Tennessee—2008 8-Hour Ozone NAAQS (Primary and secondary)

Designated area	Designation		Classification	
	Date [1]	Type	Date [1]	Type
Bradley County		Unclassifiable/Attainment		
Campbell County		Unclassifiable/Attainment		
Cannon County		Unclassifiable/Attainment		
Carroll County		Unclassifiable/Attainment		
Carter County		Unclassifiable/Attainment		
Cheatham County		Unclassifiable/Attainment		
Chester County		Unclassifiable/Attainment		
Claiborne County		Unclassifiable/Attainment		
Clay County		Unclassifiable/Attainment		
Cocke County		Unclassifiable/Attainment		
Coffee County		Unclassifiable/Attainment		
Crockett County		Unclassifiable/Attainment		
Cumberland County		Unclassifiable/Attainment		
Davidson County		Unclassifiable/Attainment		
Decatur County		Unclassifiable/Attainment		
DeKalb County		Unclassifiable/Attainment		
Dickson County		Unclassifiable/Attainment		
Dyer County		Unclassifiable/Attainment		
Fayette County		Unclassifiable/Attainment		
Fentress County		Unclassifiable/Attainment		
Franklin County		Unclassifiable/Attainment		
Gibson County		Unclassifiable/Attainment		
Giles County		Unclassifiable/Attainment		
Grainger County		Unclassifiable/Attainment		
Greene County		Unclassifiable/Attainment		
Grundy County		Unclassifiable/Attainment		
Hamblen County		Unclassifiable/Attainment		
Hamilton County		Unclassifiable/Attainment		
Hancock County		Unclassifiable/Attainment		
Hardeman County		Unclassifiable/Attainment		
Hardin County		Unclassifiable/Attainment		
Hawkins County		Unclassifiable/Attainment		
Haywood County		Unclassifiable/Attainment		
Henderson County		Unclassifiable/Attainment		
Henry County		Unclassifiable/Attainment		
Hickman County		Unclassifiable/Attainment		
Houston County		Unclassifiable/Attainment		
Humphreys County		Unclassifiable/Attainment		
Jackson County		Unclassifiable/Attainment		
Jefferson County		Unclassifiable/Attainment		
Johnson County		Unclassifiable/Attainment		
Lake County		Unclassifiable/Attainment		
Lauderdale County		Unclassifiable/Attainment		
Lawrence County		Unclassifiable/Attainment		
Lewis County		Unclassifiable/Attainment		
Lincoln County		Unclassifiable/Attainment		
Loudon County		Unclassifiable/Attainment		
McMinn County		Unclassifiable/Attainment		
McNairy County		Unclassifiable/Attainment		
Macon County		Unclassifiable/Attainment		
Madison County		Unclassifiable/Attainment		
Marion County		Unclassifiable/Attainment		
Marshall County		Unclassifiable/Attainment		
Maury County		Unclassifiable/Attainment		
Meigs County		Unclassifiable/Attainment		
Monroe County		Unclassifiable/Attainment		
Montgomery County		Unclassifiable/Attainment		
Moore County		Unclassifiable/Attainment		
Morgan County		Unclassifiable/Attainment		
Obion County		Unclassifiable/Attainment		
Overton County		Unclassifiable/Attainment		
Perry County		Unclassifiable/Attainment		
Pickett County		Unclassifiable/Attainment		
Polk County		Unclassifiable/Attainment		
Putnam County		Unclassifiable/Attainment		
Rhea County		Unclassifiable/Attainment		
Roane County		Unclassifiable/Attainment		
Robertson County		Unclassifiable/Attainment		
Rutherford County		Unclassifiable/Attainment		
Scott County		Unclassifiable/Attainment		
Sequatchie County		Unclassifiable/Attainment		

Tennessee—2008 8-Hour Ozone NAAQS (Primary and secondary)

Designated area	Designation		Classification	
	Date [1]	Type	Date [1]	Type
Sevier County		Unclassifiable/Attainment		
Smith County		Unclassifiable/Attainment		
Stewart County		Unclassifiable/Attainment		
Sullivan County		Unclassifiable/Attainment		
Sumner County		Unclassifiable/Attainment		
Tipton County		Unclassifiable/Attainment		
Trousdale County		Unclassifiable/Attainment		
Unicoi County		Unclassifiable/Attainment		
Union County		Unclassifiable/Attainment		
Van Buren County		Unclassifiable/Attainment		
Warren County		Unclassifiable/Attainment		
Washington County		Unclassifiable/Attainment		
Wayne County		Unclassifiable/Attainment		
Weakley County		Unclassifiable/Attainment		
White County		Unclassifiable/Attainment		
Williamson County		Unclassifiable/Attainment		
Wilson County		Unclassifiable/Attainment		

[1] This date is July 20, 2012, unless otherwise noted.
[2] Excludes Indian country located in each area, unless otherwise noted.
[3] Includes any Indian country in each county or area, unless otherwise specified.

* * * * *

§ 81.344 Texas.

Texas—SO_2

Designated area	Does not meet primary standards	Does not meet secondary standards	Cannot be classified	Better than national standards
AQCR 022				X
AQCR 106				X
AQCR 153:				
El Paso County			[1] X	
Remainder of AQCR				X
AQCR 210				X
AQCR 211				X
AQCR 212				X
AQCR 213				X
AQCR 214				X
AQCR 215				X
AQCR 216				X
AQCR 217				X
AQCR 218				X

[1] EPA designation replaces State designation.

Texas—Carbon Monoxide

Designated Area	Designation		Classification	
	Date [1]	Type	Date [1]	Type
El Paso				
El Paso County	8/4/08	Attainment		
AQCR 022 Shreveport-Texarkana-Tyler Interstate		Unclassifiable/Attainment		
Anderson County				
Bowie County				
Camp County				
Cass County				
Cherokee County				
Delta County				
Franklin County				
Gregg County				
Harrison County				
Henderson County				
Hopkins County				
Lamar County				
Marion County				
Morris County				

Texas—Carbon Monoxide

Designated Area	Designation		Classification	
	Date [1]	Type	Date [1]	Type
Panola County				
Rains County				
Red River County				
Rusk County				
Smith County				
Titus County				
Upshur County				
Van Zandt County				
Wood County				
AQCR 106 Southern Louisiana-S.E. Texas Interstate.	.....	Unclassifiable/Attainment		
Angelina County, Hardin County, Houston County, Jasper County, Jefferson County, Nacogdoches County, Newton County, Orange County, Polk County, Sabine County, San Augustine County, San Jacinto County, Shelby County, Trinity County, Tyler County				
AQCR 153 El Paso-LC-Al Interstate (Remainder of)	.....	Unclassifiable/Attainment		
Brewster County				
Culberson County				
El Paso County (part)				
Remainder of county				
Hudspeth County				
Jeff Davis County				
Presidio County				
AQCR 210 Abilene-Wichita Falls Intrastate	.....	Unclassifiable/ Attainment		
Archer County, Baylor County, Brown County, Callahan County, Clay County, Coleman County, Comanche County, Cottle County, Eastland County, Fisher County, Foard County, Hardeman County, Haskell County, Jack County, Jones County, Kent County, Knox County, Mitchell County, Montague County, Nolan County, Runnels County, Scurry County, Shackelford County, Stephens County, Stonewall County, Taylor County, Throckmorton County, Wichita County, Wilbarger County, Young County				
AQCR 211 Amarillo-Lubbock Intrastate	.....	Unclassifiable/Attainment		
Armstrong County, Bailey County, Briscoe County, Carson County, Castro County, Childress County, Cochran County, Collingsworth County, Crosby County, Dallam County, Deaf Smith County, Dickens County, Donley County, Floyd County, Garza County, Gray County, Hale County, Hall County, Hansford County, Hartley County, Hemphill County, Hockley County, Hutchinson County, King County, Lamb County, Lipscomb County, Lubbock County, Lynn County, Moore County, Motley County, Ochiltree County, Oldham County, Parmer County, Potter County, Randall County, Roberts County, Sherman County, Swisher County, Terry County, Wheeler County, Yoakum County				
AQCR 212 Austin-Waco Intrastate	.....	Unclassifiable/Attainment		
Bastrop County				
Bell County				
Blanco County				
Bosque County				
Brazos County				
Burleson County				
Burnet County				
Caldwell County				
Coryell County				
Falls County				
Fayette County				

Texas—Carbon Monoxide

Designated Area	Designation		Classification	
	Date [1]	Type	Date [1]	Type
Freestone County				
Grimes County				
Hamilton County				
Hays County				
Hill County				
Lampasas County				
Lee County				
Leon County				
Limestone County				
Llano County				
Madison County				
McLennan County				
Milam County				
Mills County				
Robertson County				
San Saba County				
Travis County				
Washington County				
Williamson County				
AQCR 213 Brownsville Laredo Intrastate	.....	Unclassifiable/Attainment		
Cameron County				
Hidalgo County				
Jim Hogg County				
Starr County				
Webb County				
Willacy County				
Zapata County				
AQCR 214 Corpus Christi-Victoria Intrastate	.....	Unclassifiable/Attainment		
Aransas County, Bee County, Brooks County, Calhoun County, De Witt County, Duval County, Goliad County, Gonzales County, Jackson County, Jim Wells County, Kenedy County, Kleberg County, Lavaca County, Live Oak County, McMullen County, Nueces County, Refugio County, San Patricio County, Victoria County				
AQCR 215 Metropolitan Dallas-Fort Worth Intrastate	.....	Unclassifiable/Attainment		
Collin County				
Cooke County				
Dallas County				
Denton County				
Ellis County				
Erath County				
Fannin County				
Grayson County				
Hood County				
Hunt County				
Johnson County				
Kaufman County				
Navarro County				
Palo Pinto County				
Parker County				
Rockwall County				
Somervell County				
Tarrant County				
Wise County				
AQCR 216 Metropolitan Houston-Galveston Intrastate.	.....	Unclassifiable/Attainment		
Austin County, Brazoria County, Chambers County, Colorado County, Fort Bend County, Galveston County, Harris County, Liberty County, Matagorda County, Montgomery County, Walker County, Waller County, Wharton County				
AQCR 217 Metropolitan San Antonio Intrastate	.....	Unclassifiable/Attainment		

Texas—Carbon Monoxide

Designated Area	Designation		Classification	
	Date [1]	Type	Date [1]	Type
Atascosa County, Bandera County, Bexar County, Comal County, Dimmit County, Edwards County, Frio County, Gillespie County, Guadalupe County, Karnes County, Kendall County, Kerr County, Kinney County, La Salle County, Maverick County, Medina County, Real County, Uvalde County, Val Verde County, Wilson County, Zavala County				
AQCR 218 Midland-Odessa-San Angelo Intrastate ..	.....	Unclassifiable/Attainment		
Andrews County, Borden County, Coke County, Concho County, Crane County, Crockett County, Dawson County, Ector County, Gaines County, Glasscock County, Howard County, Irion County, Kimble County, Loving County, Martin County, Mason County, McCulloch County, Menard County, Midland County, Pecos County, Reagan County, Reeves County, Schleicher County, Sterling County, Sutton County, Terrell County, Tom Green County, Upton County, Ward County, Winkler County				

[1] This date is November 15, 1990, unless otherwise noted.

Texas—Ozone (1-Hour Standard)[2]

Designated area	Designation		Classification	
	Date [1]	Type	Date [1]	Type
Beaumont/Port Arthur Area:				
Hardin County	11/15/90	Nonattainment	4/29/04	Serious.
Jefferson County	11/15/90	Nonattainment	4/29/04	Serious.
Orange County	11/15/90	Nonattainment	4/29/04	Serious.
Dallas-Fort Worth Area:				
Collin County	11/15/90	Nonattainment	3/20/98	Serious.
Dallas County	11/15/90	Nonattainment	3/20/98	Serious.
Denton County	11/15/90	Nonattainment	3/20/98	Serious.
Tarrant County	11/15/90	Nonattainment	3/20/98	Serious.
El Paso Area:.				
El Paso County	11/15/90	Nonattainment	11/15/90	Serious.
Houston-Galveston-Brazoria Area:				
Brazoria County	11/15/90	Nonattainment	11/15/90	Severe-17.
Chambers County	11/15/90	Nonattainment	11/15/90	Severe-17.
Fort Bend County	11/15/90	Nonattainment	11/15/90	Severe-17.
Galveston County	11/15/90	Nonattainment	11/15/90	Severe-17.
Harris County	11/15/90	Nonattainment	11/15/90	Severe-17.
Liberty County	11/15/90	Nonattainment	11/15/90	Severe-17.
Montgomery County	11/15/90	Nonattainment	11/15/90	Severe-17.
Waller County	11/15/90	Nonattainment	11/15/90	Severe-17.
Longview Area:				
Gregg County	11/15/90	Unclassifiable/Attainment	11/15/90	
Victoria Area:				
Victoria County	.....	Attainment		
AQCR 022 Shreveport-Texarkana-Tyler Interstate ...	.....	Unclassifiable/Attainment		
Anderson County				
Bowie County				
Camp County				
Cass County				
Cherokee County				
Delta County				
Franklin County				
Gregg County				
Harrison County				
Henderson County				
Hopkins County				
Lamar County				
Marion County				
Morris County				
Panola County				

Texas—Ozone (1-Hour Standard)[2]

Designated area	Designation		Classification	
	Date [1]	Type	Date [1]	Type
Rains County				
Red River County				
Rusk County				
Smith County				
Titus County				
Upshur County				
Van Zandt County				
Wood County				
AQCR 106 S Louisiana-SE Texas Interstate (Remainder of).	.....	Unclassifiable/Attainment		
Angelina County, Houston County, Jasper County, Nacogdoches County, Newton County, Polk County, Sabine County, San Augustine County, San Jacinto County, Shelby County, Trinity County, Tyler County				
AQCR 153 El Paso-Las Cruces-Alamogordo Interstate.	.....	Unclassifiable/Attainment		
Brewster County				
Culberson County				
Hudspeth County				
Jeff Davis County				
Presidio County				
AQCR 210 Abilene-Wichita Falls Intrastate	.....	Unclassifiable/Attainment		
Archer County, Baylor County, Brown County, Callahan County, Clay County, Coleman County, Comanche County, Cottle County, Eastland County, Fisher County, Foard County, Hardeman County, Haskell County, Jack County, Jones County, Kent County, Knox County, Mitchell County, Montague County, Nolan County, Runnels County, Scurry County, Shackelford County, Stephens County, Stonewall County, Taylor County, Throckmorton County, Wichita County, Wilbarger County, Young County				
AQCR 211 Amarillo-Lubbock Intrastate	.....	Unclassifiable/Attainment		
Armstrong County, Bailey County, Briscoe County, Carson County, Castro County, Childress County, Cochran County, Collingsworth County, Crosby County, Dallam County, Deaf Smith County, Dickens County, Donley County, Floyd County, Garza County, Gray County, Hale County, Hall County, Hansford County, Hartley County, Hemphill County, Hockley County, Hutchinson County, King County, Lamb County, Lipscomb County, Lubbock County, Lynn County, Moore County, Motley County, Ochiltree County, Oldham County, Parmer County, Potter County, Randall County, Roberts County, Sherman County, Swisher County, Terry County, Wheeler County, Yoakum County				
AQCR 212 Austin-Waco Intrastate	.....	Unclassifiable/Attainment		
Bastrop County				
Bell County				
Blanco County				
Bosque County				
Brazos County				
Burleson County				
Burnet County				
Caldwell County				
Coryell County				
Falls County				

Texas—Ozone (1-Hour Standard)[2]

Designated area	Designation		Classification	
	Date [1]	Type	Date [1]	Type
Fayette County				
Freestone County				
Grimes County				
Hamilton County				
Hays County				
Hill County				
Lampasas County				
Lee County				
Leon County				
Limestone County				
Llano County				
Madison County				
McLennan County				
Milam County				
Mills County				
Robertson County				
San Saba County				
Travis County				
Washington County				
Williamson County				
AQCR 213 Brownsville-Laredo Intrastate	.....	Unclassifiable/Attainment		
Cameron County				
Hidalgo County				
Jim Hogg County				
Starr County				
Webb County				
Willacy County				
Zapata County				
AQCR 214 Corpus Christi-Victoria Intrastate (Remainder of).	.....	Unclassifiable/Attainment		
Aransas County, Bee County, Brooks County, Calhoun County, De Witt County, Duval County, Goliad County, Gonzales County, Jackson County, Jim Wells County, Kenedy County, Kleberg County, Lavaca County, Live Oak County, McMullen County, Refugio County, San Patricio County,				
AQCR 214 Corpus Christi-Victoria Intrastate (part)	.....	Unclassifiable/Attainment		
Nueces County				
AQCR 215 Metro Dallas-Fort Worth Intrastate (Remainder of)	.....	Unclassifiable/Attainment		
Cooke County				
Ellis County				
Erath County				
Fannin County				
Grayson County				
Hood County				
Hunt County				
Johnson County				
Kaufman County				
Navarro County				
Palo Pinto County				
Parker County				
Rockwall County				
Somervell County				
Wise County				
AQCR 216 Metro Houston-Galveston Intrastate (Remainder of).	.....	Unclassifiable/Attainment		
Austin County, Colorado County, Matagorda County, Walker County, Wharton County				
AQCR 217 Metro San Antonio Intrastate (part)	.....	Unclassifiable/Attainment		
Bexar County				
AQCR 217 Metro San Antonio Intrastate (Remainder of).	.....	Unclassifiable/Attainment		
Atascosa County, Bandera County, Comal County, Dimmit County, Edwards County, Frio County, Gillespie County, Guadalupe County,				

Texas—Ozone (1-Hour Standard)[2]

Designated area	Designation		Classification	
	Date [1]	Type	Date [1]	Type
Karnes County, Kendall County, Kerr County, Kinney County, La Salle County, Maverick County, Medina County, Real County, Uvalde County, Val Verde County, Wilson County, Zavala County				
AQCR 218 Midland-Odessa-San Angelo Intrastate (part).	.....	Unclassifiable/Attainment		
Ector County				
AQCR 218 Midland-Odessa-San Angelo Intrastate (Remainder of).	.....	Unclassifiable/Attainment		
Andrews County, Borden County, Coke County, Concho County, Crane County, Crockett County, Dawson County, Gaines County, Glasscock County, Howard County, Irion County, Kimble County, Loving County, Martin County, Mason County, McCulloch County, Menard County, Midland County, Pecos County, Reagan County, Reeves County, Schleicher County, Sterling County, Sutton County, Terrell County, Tom Green County, Upton County, Ward County, Winkler County				

[1] This date is October 18, 2000, unless otherwise noted.
[2] The 1-hour ozone standard is revoked effective June 15, 2005 for all areas in Texas except the San Antonio area where it is revoked effective April 15, 2009.

Texas-PM–10 Nonattainment Areas

Designated Area	Designation		Classification	
	Date [1]	Type	Date [1]	Type
AQCR 022	.....	Unclassifiable		
AQCR 106	.....	Unclassifiable		
AQCR 153:				
El Paso County—city of El Paso	11/15/90	Nonattainment	11/15/90	Moderate
3 limited areas in El Paso County (El Paso 1, 2, and 4).	.....	Unclassifiable		
1 limited area in El Paso County (El Paso 3)	.....	Unclassifiable		
1 limited area in El Paso County (El Paso 5)	.....	Unclassifiable		
Remainder of AQCR	.....	Unclassifiable		
AQCR 210	.....	Unclassifiable		
AQCR 211:				
Lubbock County—That portion of the city of Lubbock enclosed by Loop 289 highway.	.....	Unclassifiable		
Remainder of AQCR	.....	Unclassifiable		
AQCR 212	.....	Unclassifiable		
AQCR 213:				
2 limited areas in Cameron County (Cameron 1 and 2)	.....	Unclassifiable		
Remainder of AQCR	.....	Unclassifiable		
QCR 214:				
2 limited areas in Nueces County (Nueces 1 and 2)	.....	Unclassifiable		
Remainder of AQCR	.....	Unclassifiable		
AQCR 215:				
3 limited areas in Dallas County (Dallas 1, 2, and 3)	.....	Unclassifiable		
1 limited area in Tarrant County (Tarrant 1)	.....	Unclassifiable		
3 limited areas in Tarrant County (Tarrant 2, 3, and 4)	.....	Unclassifiable		
Remainder of AQCR	.....	Unclassifiable		
AQCR 216:				
1 limited area in Harris County (Houston 1)	.....	Unclassifiable		
1 limited area in Harris County	.....	Unclassifiable		

Texas-PM–10 Nonattainment Areas

Designated Area	Designation		Classification	
	Date [1]	Type	Date [1]	Type
(Houston 2)				
1 limited area in Harris County		Unclassifiable		
(Aldine)				
1 limited area in Harris County		Unclassifiable		
1 limited area in Galveston County		Unclassifiable		
Remainder of AQCR		Unclassifiable		
AQCR 217:				
1 limited area in Bexar County		Unclassifiable		
Remainder of AQCR		Unclassifiable		
AQCR 218		Unclassifiable		

[1] This date is November 15, 1990, unless otherwise noted.

Texas—NO_2 (1971 Annual Standard)

Designated area	Does not meet primary standards	Cannot be classified or better than national standards
AQCR 022		X
AQCR 106		X
AQCR 153		X
AQCR 210		X
AQCR 211		X
AQCR 212		X
AQCR 213		X
AQCR 214		X
AQCR 215		X
AQCR 216		X
AQCR 217		X
AQCR 218		X

Texas—NO_2 (2010 1-Hour Standard)

Designated area	Designation [a]	
	Date [1]	Type
Anderson County		Unclassifiable/Attainment.
Andrews County		Unclassifiable/Attainment.
Angelina County		Unclassifiable/Attainment.
Aransas County		Unclassifiable/Attainment.
Archer County		Unclassifiable/Attainment.
Armstrong County		Unclassifiable/Attainment.
Atascosa County		Unclassifiable/Attainment.
Austin County		Unclassifiable/Attainment.
Bailey County		Unclassifiable/Attainment.
Bandera County		Unclassifiable/Attainment.
Bastrop County		Unclassifiable/Attainment.
Baylor County		Unclassifiable/Attainment.
Bee County		Unclassifiable/Attainment.
Bell County		Unclassifiable/Attainment.
Bexar County		Unclassifiable/Attainment.
Blanco County		Unclassifiable/Attainment.
Borden County		Unclassifiable/Attainment.
Bosque County		Unclassifiable/Attainment.
Bowie County		Unclassifiable/Attainment.
Brazoria County		Unclassifiable/Attainment.
Brazos County		Unclassifiable/Attainment.
Brewster County		Unclassifiable/Attainment.
Briscoe County		Unclassifiable/Attainment.
Brooks County		Unclassifiable/Attainment.
Brown County		Unclassifiable/Attainment.
Burleson County		Unclassifiable/Attainment.
Burnet County		Unclassifiable/Attainment.
Caldwell County		Unclassifiable/Attainment.
Calhoun County		Unclassifiable/Attainment.
Callahan County		Unclassifiable/Attainment.
Cameron County		Unclassifiable/Attainment.
Camp County		Unclassifiable/Attainment.
Carson County		Unclassifiable/Attainment.
Cass County		Unclassifiable/Attainment.

Texas—NO_2 (2010 1-Hour Standard)

Designated area	Designation [a]	
	Date [1]	Type
Castro County		Unclassifiable/Attainment.
Cherokee County		Unclassifiable/Attainment.
Childress County		Unclassifiable/Attainment.
Chambers County		Unclassifiable/Attainment.
Clay County		Unclassifiable/Attainment.
Cochran County		Unclassifiable/Attainment.
Coke County		Unclassifiable/Attainment.
Coleman County		Unclassifiable/Attainment.
Collin County		Unclassifiable/Attainment.
Collingsworth County		Unclassifiable/Attainment.
Colorado County		Unclassifiable/Attainment.
Comal County		Unclassifiable/Attainment.
Comanche County		Unclassifiable/Attainment.
Concho County		Unclassifiable/Attainment.
Cooke County		Unclassifiable/Attainment.
Coryell County		Unclassifiable/Attainment.
Cottle County		Unclassifiable/Attainment.
Crane County		Unclassifiable/Attainment.
Crockett County		Unclassifiable/Attainment.
Crosby County		Unclassifiable/Attainment.
Culberson County		Unclassifiable/Attainment.
Dallam County		Unclassifiable/Attainment.
Dallas County		Unclassifiable/Attainment.
Dawson County		Unclassifiable/Attainment.
Deaf Smith County		Unclassifiable/Attainment.
Delta County		Unclassifiable/Attainment.
Denton County		Unclassifiable/Attainment.
DeWitt County		Unclassifiable/Attainment.
Dickens County		Unclassifiable/Attainment.
Dimmit County		Unclassifiable/Attainment.
Donley County		Unclassifiable/Attainment.
Duval County		Unclassifiable/Attainment.
Eastland County		Unclassifiable/Attainment.
Ector County		Unclassifiable/Attainment.
Edwards County		Unclassifiable/Attainment.
El Paso County		Unclassifiable/Attainment.
Ellis County		Unclassifiable/Attainment.
Erath County		Unclassifiable/Attainment.
Falls County		Unclassifiable/Attainment.
Fannin County		Unclassifiable/Attainment.
Fayette County		Unclassifiable/Attainment.
Fisher County		Unclassifiable/Attainment.
Floyd County		Unclassifiable/Attainment.
Foard County		Unclassifiable/Attainment.
Fort Bend County		Unclassifiable/Attainment.
Franklin County		Unclassifiable/Attainment.
Freestone County		Unclassifiable/Attainment.
Frio County		Unclassifiable/Attainment.
Gaines County		Unclassifiable/Attainment.
Galveston County		Unclassifiable/Attainment.
Garza County		Unclassifiable/Attainment.
Gillespie County		Unclassifiable/Attainment.
Glasscock County		Unclassifiable/Attainment.
Goliad County		Unclassifiable/Attainment.
Gonzales County		Unclassifiable/Attainment.
Gray County		Unclassifiable/Attainment.
Grayson County		Unclassifiable/Attainment.
Gregg County		Unclassifiable/Attainment.
Grimes County		Unclassifiable/Attainment.
Guadalupe County		Unclassifiable/Attainment.
Hale County		Unclassifiable/Attainment.
Hall County		Unclassifiable/Attainment.
Hamilton County		Unclassifiable/Attainment.
Hansford County		Unclassifiable/Attainment.
Hardeman County		Unclassifiable/Attainment.
Hardin County		Unclassifiable/Attainment.
Harris County		Unclassifiable/Attainment.
Harrison County		Unclassifiable/Attainment.
Hartley County		Unclassifiable/Attainment.
Haskell County		Unclassifiable/Attainment.
Hays County		Unclassifiable/Attainment.

Texas—NO_2 (2010 1-Hour Standard)

Designated area	Designation [a]	
	Date [1]	Type
Hemphill County		Unclassifiable/Attainment.
Henderson County		Unclassifiable/Attainment.
Hidalgo County		Unclassifiable/Attainment.
Hill County		Unclassifiable/Attainment.
Hockley County		Unclassifiable/Attainment.
Hood County		Unclassifiable/Attainment.
Hopkins County		Unclassifiable/Attainment.
Houston County		Unclassifiable/Attainment.
Howard County		Unclassifiable/Attainment.
Hudspeth County		Unclassifiable/Attainment.
Hunt County		Unclassifiable/Attainment.
Hutchinson County		Unclassifiable/Attainment.
Irion County		Unclassifiable/Attainment.
Jack County		Unclassifiable/Attainment.
Jackson County		Unclassifiable/Attainment.
Jasper County		Unclassifiable/Attainment.
Jeff Davis County		Unclassifiable/Attainment.
Jefferson County		Unclassifiable/Attainment.
Jim Hogg County		Unclassifiable/Attainment.
Jim Wells County		Unclassifiable/Attainment.
Johnson County		Unclassifiable/Attainment.
Jones County		Unclassifiable/Attainment.
Karnes County		Unclassifiable/Attainment.
Kaufman County		Unclassifiable/Attainment.
Kendall County		Unclassifiable/Attainment.
Kenedy County		Unclassifiable/Attainment.
Kent County		Unclassifiable/Attainment.
Kerr County		Unclassifiable/Attainment.
Kimble County		Unclassifiable/Attainment.
King County		Unclassifiable/Attainment.
Kinney County		Unclassifiable/Attainment.
Kleberg County		Unclassifiable/Attainment.
Knox County		Unclassifiable/Attainment.
La Salle County		Unclassifiable/Attainment.
Lamar County		Unclassifiable/Attainment.
Lamb County		Unclassifiable/Attainment.
Lampasas County		Unclassifiable/Attainment.
Lavaca County		Unclassifiable/Attainment.
Lee County		Unclassifiable/Attainment.
Leon County		Unclassifiable/Attainment.
Liberty County		Unclassifiable/Attainment.
Limestone County		Unclassifiable/Attainment.
Lipscomb County		Unclassifiable/Attainment.
Live Oak County		Unclassifiable/Attainment.
Llano County		Unclassifiable/Attainment.
Loving County		Unclassifiable/Attainment.
Lubbock County		Unclassifiable/Attainment.
Lynn County		Unclassifiable/Attainment.
McCulloch County		Unclassifiable/Attainment.
McLennan County		Unclassifiable/Attainment.
McMullen County		Unclassifiable/Attainment.
Madison County		Unclassifiable/Attainment.
Marion County		Unclassifiable/Attainment.
Martin County		Unclassifiable/Attainment.
Mason County		Unclassifiable/Attainment.
Matagorda County		Unclassifiable/Attainment.
Maverick County		Unclassifiable/Attainment.
Medina County		Unclassifiable/Attainment.
Menard County		Unclassifiable/Attainment.
Midland County		Unclassifiable/Attainment.
Milam County		Unclassifiable/Attainment.
Mills County		Unclassifiable/Attainment.
Mitchell County		Unclassifiable/Attainment.
Montague County		Unclassifiable/Attainment.
Montgomery County		Unclassifiable/Attainment.
Moore County		Unclassifiable/Attainment.
Morris County		Unclassifiable/Attainment.
Motley County		Unclassifiable/Attainment.
Nacogdoches County		Unclassifiable/Attainment.
Navarro County		Unclassifiable/Attainment.
Newton County		Unclassifiable/Attainment.

Texas—NO_2 (2010 1-Hour Standard)

Designated area	Designation [a]	
	Date [1]	Type
Nolan County		Unclassifiable/Attainment.
Nueces County		Unclassifiable/Attainment.
Ochiltree County		Unclassifiable/Attainment.
Oldham County		Unclassifiable/Attainment.
Orange County		Unclassifiable/Attainment.
Palo Pinto County		Unclassifiable/Attainment.
Panola County		Unclassifiable/Attainment.
Parker County		Unclassifiable/Attainment.
Parmer County		Unclassifiable/Attainment.
Pecos County		Unclassifiable/Attainment.
Polk County		Unclassifiable/Attainment.
Potter County		Unclassifiable/Attainment.
Presidio County		Unclassifiable/Attainment.
Rains County		Unclassifiable/Attainment.
Randall County		Unclassifiable/Attainment.
Reagan County		Unclassifiable/Attainment.
Real County		Unclassifiable/Attainment.
Red River County		Unclassifiable/Attainment.
Reeves County		Unclassifiable/Attainment.
Refugio County		Unclassifiable/Attainment.
Roberts County		Unclassifiable/Attainment.
Robertson County		Unclassifiable/Attainment.
Rockwall County		Unclassifiable/Attainment.
Runnels County		Unclassifiable/Attainment.
Rusk County		Unclassifiable/Attainment.
Sabine County		Unclassifiable/Attainment.
San Augustine County		Unclassifiable/Attainment.
San Jacinto County		Unclassifiable/Attainment.
San Patricio County		Unclassifiable/Attainment.
San Saba County		Unclassifiable/Attainment.
Schleicher County		Unclassifiable/Attainment.
Scurry County		Unclassifiable/Attainment.
Shackelford County		Unclassifiable/Attainment.
Shelby County		Unclassifiable/Attainment.
Sherman County		Unclassifiable/Attainment.
Smith County		Unclassifiable/Attainment.
Somervell County		Unclassifiable/Attainment.
Starr County		Unclassifiable/Attainment.
Stephens County		Unclassifiable/Attainment.
Sterling County		Unclassifiable/Attainment.
Stonewall County		Unclassifiable/Attainment.
Sutton County		Unclassifiable/Attainment.
Swisher County		Unclassifiable/Attainment.
Tarrant County		Unclassifiable/Attainment.
Taylor County		Unclassifiable/Attainment.
Terrell County		Unclassifiable/Attainment.
Terry County		Unclassifiable/Attainment.
Throckmorton County		Unclassifiable/Attainment.
Titus County		Unclassifiable/Attainment.
Tom Green County		Unclassifiable/Attainment.
Travis County		Unclassifiable/Attainment.
Trinity County		Unclassifiable/Attainment.
Tyler County		Unclassifiable/Attainment.
Upshur County		Unclassifiable/Attainment.
Upton County		Unclassifiable/Attainment.
Uvalde County		Unclassifiable/Attainment.
Val Verde County		Unclassifiable/Attainment.
Van Zandt County		Unclassifiable/Attainment.
Victoria County		Unclassifiable/Attainment.
Walker County		Unclassifiable/Attainment.
Waller County		Unclassifiable/Attainment.
Ward County		Unclassifiable/Attainment.
Washington County		Unclassifiable/Attainment.
Webb County		Unclassifiable/Attainment.
Wharton County		Unclassifiable/Attainment.
Wheeler County		Unclassifiable/Attainment.
Wichita County		Unclassifiable/Attainment.
Wilbarger County		Unclassifiable/Attainment.
Willacy County		Unclassifiable/Attainment.
Williamson County		Unclassifiable/Attainment.
Wilson County		Unclassifiable/Attainment.

Texas—NO_2 (2010 1-Hour Standard)

Designated area	Designation [a]	
	Date [1]	Type
Winkler County		Unclassifiable/Attainment.
Wise County		Unclassifiable/Attainment.
Wood County		Unclassifiable/Attainment.
Yoakum County		Unclassifiable/Attainment.
Young County		Unclassifiable/Attainment.
Zapata County		Unclassifiable/Attainment.
Zavala County		Unclassifiable/Attainment.

[a] Includes Indian Country located in each county or area, except as otherwise specified.
[1] This date is 90 days after October 31, 2011, unless otherwise noted.

Texas—Ozone (8-Hour Standard)

Designated area	Designation [a]		Category/classification	
	Date [1]	Type	Date [1]	Type
Beaumont/Port Arthur TX:				
Hardin County	(3)	Attainment	(3)	
Jefferson County	(3)	Attainment	(3)	
Orange County	(3)	Attainment	(3)	
Dallas-Fort Worth, TX:				
Collin County		Nonattainment	(5)	Subpart 2/Serious.
Dallas County		Nonattainment	(5)	Subpart 2/Serious.
Denton County		Nonattainment	(5)	Subpart 2/Serious.
Ellis County		Nonattainment	(5)	Subpart 2/Serious.
Johnson County		Nonattainment	(5)	Subpart 2/Serious.
Kaufman County		Nonattainment	(5)	Subpart 2/Serious.
Parker County		Nonattainment	(5)	Subpart 2/Serious.
Rockwall County		Nonattainment	(5)	Subpart 2/Serious.
Tarrant County		Nonattainment	(5)	Subpart 2/Serious.
Houston-Galveston-Brazoria, TX:				
Brazoria County		Nonattainment	(4)	Subpart 2/Severe 15.
Chambers County		Nonattainment	(4)	Subpart 2/Severe 15.
Fort Bend County		Nonattainment	(4)	Subpart 2/Severe 15.
Galveston County		Nonattainment	(4)	Subpart 2/Severe 15.
Harris County		Nonattainment	(4)	Subpart 2/Severe 15.
Liberty County		Nonattainment	(4)	Subpart 2/Severe 15.
Montgomery County		Nonattainment	(4)	Subpart 2/Severe 15.
Waller County		Nonattainment	(4)	Subpart 2/Severe 15.
San Antonio, TX:	(2)			
Bexar County	(2)	Attainment		
Comal County	(2)	Attainment		
Guadalupe County	(2)	Attainment		
Victoria Area:				
Victoria County		Unclassifiable/Attainment		
AQCR 022 Shreveport-Texarkana-Tyler Interstate.		Unclassifiable/Attainment		
Anderson County				
Bowie County				
Camp County				
Cass County				
Cherokee County				
Delta County				
Franklin County				
Gregg County				
Harrison County				
Hopkins County				
Lamar County				
Marion County				
Morris County				
Panola County				
Rains County				
Red River County				
Rusk County				
Smith County				
Titus County				
Upshur County				
Van Zandt County				
Wood County				
AQCR 106 S Louisiana-SE Texas Interstate (remainder of).		Unclassifiable/Attainment		

Texas—Ozone (8-Hour Standard)

Designated area	Designation [a]		Category/classification	
	Date [1]	Type	Date [1]	Type
Angelina County				
Houston County				
Jasper County				
Nacogdoches County				
Newton County				
Polk County				
Sabine County				
San Augustine County				
San Jacinto County				
Shelby County				
Trinity County				
Tyler County				
AQCR 153 El Paso-Las Cruces-Alamogordo Interstate.	.....	Unclassifiable/Attainment		
Brewster County				
Culberson County				
El Paso County				
Hudspeth County				
Jeff Davis County				
Presidio County				
AQCR 210 Abilene-Wichita Falls Intrastate ..	.....	Unclassifiable/Attainment		
Archer County				
Baylor County				
Brown County				
Callahan County				
Clay County				
Coleman County				
Comanche County				
Cottle County				
Eastland County				
Fisher County				
Foard County				
Hardeman County				
Haskell County				
Jack County				
Jones County				
Kent County				
Knox County				
Mitchell County				
Montague County				
Nolan County				
Runnels County				
Scurry County				
Shackelford County				
Stephens County				
Stonewall County				
Taylor County				
Throckmorton County				
Wichita County				
Wilbarger County				
Young County				
AQCR 211 Amarillo-Lubbock Intrastate	.....	Unclassifiable/Attainment		
Armstrong County				
Bailey County				
Briscoe County				
Carson County				
Castro County				
Childress County				
Cochran County				
Collingsworth County				
Crosby County				
Dallam County				
Deaf Smith County				
Dickens County				
Donley County				
Floyd County				
Garza County				
Gray County				
Hale County				
Hall County				
Hansford County				

Texas—Ozone (8-Hour Standard)

Designated area	Designation [a]		Category/classification	
	Date [1]	Type	Date [1]	Type
Hartley County				
Hemphill County				
Hockley County				
Hutchinson County				
King County				
Lamb County				
Lipscomb County				
Lubbock County				
Lynn County				
Moore County				
Motley County				
Ochiltree County				
Oldham County				
Parmer County				
Potter County				
Randall County				
Roberts County				
Sherman County				
Swisher County				
Terry County				
Wheeler County				
Yoakum County				
AQCR 212 Austin-Waco Intrastate	.....	Unclassifiable/Attainment		
Bastrop County				
Bell County				
Blanco County				
Bosque County				
Brazos County				
Burleson County				
Burnet County				
Caldwell County				
Coryell County				
Falls County				
Fayette County				
Freestone County				
Grimes County				
Hamilton County				
Hays County				
Hill County				
Lampasas County				
Lee County				
Leon County				
Limestone County				
Llano County				
Madison County				
McLennan County				
Milam County				
Mills County				
Robertson County				
San Saba County				
Travis County				
Washington County				
Williamson County				
AQCR 213 Brownsville-Laredo Intrastate	.....	Unclassifiable/Attainment		
Cameron County				
Hidalgo County				
Jim Hogg County				
Starr County				
Webb County				
Willacy County				
Zapata County				
AQCR 214 Corpus Christi-Victoria Intrastate (remainder of).	.....	Unclassifiable/Attainment		
Aransas County				
Bee County				
Brooks County				
Calhoun County				
DeWitt County				
Duval County				
Goliad County				
Gonzales County				

Texas—Ozone (8-Hour Standard)

Designated area	Designation [a]		Category/classification	
	Date [1]	Type	Date [1]	Type
Jackson County				
Jim Wells County				
Kenedy County				
Kleberg County				
Lavaca County				
Live Oak County				
McMullen County				
Refugio County				
San Patricio County				
AQCR 214 Corpus Christi-Victoria Intrastate (part).	.....	Unclassifiable/Attainment		
Nueces County				
AQCR 215 Metro Dallas-Fort Worth Intrastate (remainder of).	.....	Unclassifiable/Attainment		
Cooke County				
Erath County				
Fannin County				
Grayson County				
Henderson County				
Hood County				
Hunt County				
Navarro County				
Palo Pinto County				
Somervell County				
Wise County				
AQCR 216 Metro Houston-Galveston Intrastate (remainder of).	.....	Unclassifiable/Attainment		
Austin County				
Colorado County				
Matagorda County				
Walker County				
Wharton County				
AQCR 217 Metro San Antonio Intrastate (remainder of).	.....	Unclassifiable/Attainment		
Atascosa County				
Bandera County				
Dimmit County				
Edwards County				
Frio County				
Gillespie County				
Karnes County				
Kendall County				
Kerr County				
Kinney County				
La Salle County				
Maverick County				
Medina County				
Real County				
Uvalde County				
Val Verde County				
Wilson County				
Zavala County				
AQCR 218 Midland-Odessa-San Angelo Intrastate (part).	.....	Unclassifiable/Attainment		
Ector County				
AQCR 218 Midland-Odessa-San Angelo Intrastate (remainder of).	.....	Unclassifiable/Attainment		
Andrews County				
Borden County				
Coke County				
Concho County				
Crane County				
Crockett County				
Dawson County				
Gaines County				
Glasscock County				
Howard County				
Irion County				
Kimble County				
Loving County				
Martin County				

Texas—Ozone (8-Hour Standard)

Designated area	Designation [a]		Category/classification	
	Date [1]	Type	Date [1]	Type
Mason County				
McCulloch County				
Menard County				
Midland County				
Pecos County				
Reagan County				
Reeves County				
Schleicher County				
Sterling County				
Sutton County				
Terrell County				
Tom Green County				
Upton County				
Ward County				
Winkler County				

[a] Includes Indian Country located in each county or area, except as otherwise specified.
[1] This date is June 15, 2004, unless otherwise noted.
[2] Effective April 15, 2008.
[3] Effective November 19, 2010.
[4] Effective October 31, 2008.

Texas—$PM_{2.5}$ (Annual NAAQS)

Designated area	Designation [a]	
	Date [1]	Type
AQCR 022 Shreveport-Texarkana-Tyler Interstate:		
Anderson County		Unclassifiable/Attainment.
Bowie County		Unclassifiable/Attainment.
Camp County		Unclassifiable/Attainment.
Cass County		Unclassifiable/Attainment.
Cherokee County		Unclassifiable/Attainment.
Delta County		Unclassifiable/Attainment.
Franklin County		Unclassifiable/Attainment.
Gregg County		Unclassifiable/Attainment.
Harrison County		Unclassifiable/Attainment.
Hopkins County		Unclassifiable/Attainment.
Lamar County		Unclassifiable/Attainment.
Marion County		Unclassifiable/Attainment.
Morris County		Unclassifiable/Attainment.
Panola County		Unclassifiable/Attainment.
Rains County		Unclassifiable/Attainment.
Red River County		Unclassifiable/Attainment.
Rusk County		Unclassifiable/Attainment.
Smith County		Unclassifiable/Attainment.
Titus County		Unclassifiable/Attainment.
Upshur County		Unclassifiable/Attainment.
Van Zandt County		Unclassifiable/Attainment.
Wood County		Unclassifiable/Attainment.
AQCR 106 S Louisiana-SE Texas Interstate (remainder of):		
Angelina County		Unclassifiable/Attainment.
Houston County		Unclassifiable/Attainment.
Jasper County		Unclassifiable/Attainment.
Nacogdoches County		Unclassifiable/Attainment.
Newton County		Unclassifiable/Attainment.
Polk County		Unclassifiable/Attainment.
Sabine County		Unclassifiable/Attainment.
San Augustine County		Unclassifiable/Attainment.
San Jacinto County		Unclassifiable/Attainment.
Shelby County		Unclassifiable/Attainment.
Trinity County		Unclassifiable/Attainment.
Tyler County		Unclassifiable/Attainment.
AQCR 153 El Paso-Las Cruces-Alamogordo Interstate:		
Brewster County		Unclassifiable/Attainment.
Culberson County		Unclassifiable/Attainment.
El Paso County		Unclassifiable/Attainment.
Hudspeth County		Unclassifiable/Attainment.
Jeff Davis County		Unclassifiable/Attainment.
Presidio County		Unclassifiable/Attainment.
AQCR 210 Abilene-Wichita Falls Intrastate:		
Archer County		Unclassifiable/Attainment.

Texas—$PM_{2.5}$ (Annual NAAQS)

Designated area	Designation [a]	
	Date [1]	Type
Baylor County		Unclassifiable/Attainment.
Brown County		Unclassifiable/Attainment.
Callahan County		Unclassifiable/Attainment.
Clay County		Unclassifiable/Attainment.
Coleman County		Unclassifiable/Attainment.
Comanche County		Unclassifiable/Attainment.
Cottle County		Unclassifiable/Attainment.
Eastland County		Unclassifiable/Attainment.
Fisher County		Unclassifiable/Attainment.
Foard County		Unclassifiable/Attainment.
Hardeman County		Unclassifiable/Attainment.
Haskell County		Unclassifiable/Attainment.
Jack County		Unclassifiable/Attainment.
Jones County		Unclassifiable/Attainment.
Kent County		Unclassifiable/Attainment.
Knox County		Unclassifiable/Attainment.
Mitchell County		Unclassifiable/Attainment.
Montague County		Unclassifiable/Attainment.
Nolan County		Unclassifiable/Attainment.
Runnels County		Unclassifiable/Attainment.
Scurry County		Unclassifiable/Attainment.
Shackelford County		Unclassifiable/Attainment.
Stephens County		Unclassifiable/Attainment.
Stonewall County		Unclassifiable/Attainment.
Taylor County		Unclassifiable/Attainment.
Throckmorton County		Unclassifiable/Attainment.
Wichita County		Unclassifiable/Attainment.
Wilbarger County		Unclassifiable/Attainment.
Young County		Unclassifiable/Attainment.
AQCR 211 Amarillo-Lubbock Intrastate:		
Armstrong County		Unclassifiable/Attainment.
Bailey County		Unclassifiable/Attainment.
Briscoe County		Unclassifiable/Attainment.
Carson County		Unclassifiable/Attainment.
Castro County		Unclassifiable/Attainment.
Childress County		Unclassifiable/Attainment.
Cochran County		Unclassifiable/Attainment.
Collingsworth County		Unclassifiable/Attainment.
Crosby County		Unclassifiable/Attainment.
Dallam County		Unclassifiable/Attainment.
Deaf Smith County		Unclassifiable/Attainment.
Dickens County		Unclassifiable/Attainment.
Donley County		Unclassifiable/Attainment.
Floyd County		Unclassifiable/Attainment.
Garza County		Unclassifiable/Attainment.
Gray County		Unclassifiable/Attainment.
Hale County		Unclassifiable/Attainment.
Hall County		Unclassifiable/Attainment.
Hansford County		Unclassifiable/Attainment.
Hartley County		Unclassifiable/Attainment.
Hemphill County		Unclassifiable/Attainment.
Hockley County		Unclassifiable/Attainment.
Hutchinson County		Unclassifiable/Attainment.
King County		Unclassifiable/Attainment.
Lamb County		Unclassifiable/Attainment.
Lipscomb County		Unclassifiable/Attainment.
Lubbock County		Unclassifiable/Attainment.
Lynn County		Unclassifiable/Attainment.
Moore County		Unclassifiable/Attainment.
Motley County		Unclassifiable/Attainment.
Ochiltree County		Unclassifiable/Attainment.
Oldham County		Unclassifiable/Attainment.
Parmer County		Unclassifiable/Attainment.
Potter County		Unclassifiable/Attainment.
Randall County		Unclassifiable/Attainment.
Roberts County		Unclassifiable/Attainment.
Sherman County		Unclassifiable/Attainment.
Swisher County		Unclassifiable/Attainment.
Terry County		Unclassifiable/Attainment.
Wheeler County		Unclassifiable/Attainment.
Yoakum County		Unclassifiable/Attainment.

Texas—$PM_{2.5}$ (Annual NAAQS)

Designated area	Designation [a]	
	Date [1]	Type
AQCR 212 Austin-Waco Intrastate:		
Bastrop County		Unclassifiable/Attainment.
Bell County		Unclassifiable/Attainment.
Blanco County		Unclassifiable/Attainment.
Bosque County		Unclassifiable/Attainment.
Brazos County		Unclassifiable/Attainment.
Burleson County		Unclassifiable/Attainment.
Burnet County		Unclassifiable/Attainment.
Caldwell County		Unclassifiable/Attainment.
Coryell County		Unclassifiable/Attainment.
Falls County		Unclassifiable/Attainment.
Fayette County		Unclassifiable/Attainment.
Freestone County		Unclassifiable/Attainment.
Grimes County		Unclassifiable/Attainment.
Hamilton County		Unclassifiable/Attainment.
Hays County		Unclassifiable/Attainment.
Hill County		Unclassifiable/Attainment.
Lampasas County		Unclassifiable/Attainment.
Lee County		Unclassifiable/Attainment.
Leon County		Unclassifiable/Attainment.
Limestone County		Unclassifiable/Attainment.
Llano County		Unclassifiable/Attainment.
McLennan County		Unclassifiable/Attainment.
Madison County		Unclassifiable/Attainment.
Milam County		Unclassifiable/Attainment.
Mills County		Unclassifiable/Attainment.
Robertson County		Unclassifiable/Attainment.
San Saba County		Unclassifiable/Attainment.
Travis County		Unclassifiable/Attainment.
Washington County		Unclassifiable/Attainment.
Williamson County		Unclassifiable/Attainment.
AQCR 213 Brownsville-Laredo Intrastate:		
Cameron County		Unclassifiable/Attainment.
Hidalgo County		Unclassifiable/Attainment.
Jim Hogg County		Unclassifiable/Attainment.
Starr County		Unclassifiable/Attainment.
Webb County		Unclassifiable/Attainment.
Willacy County		Unclassifiable/Attainment.
Zapata County		Unclassifiable/Attainment.
AQCR 214 Corpus Christi-Victoria Intrastate (part):		
Nueces County		Unclassifiable/Attainment.
AQCR 214 Corpus Christi-Victoria Intrastate (remainder of):		
Aransas County		Unclassifiable/Attainment.
Bee County		Unclassifiable/Attainment.
Brooks County		Unclassifiable/Attainment.
Calhoun County		Unclassifiable/Attainment.
DeWitt County		Unclassifiable/Attainment.
Duval County		Unclassifiable/Attainment.
Goliad County		Unclassifiable/Attainment.
Gonzales County		Unclassifiable/Attainment.
Jackson County		Unclassifiable/Attainment.
Jim Wells County		Unclassifiable/Attainment.
Kenedy County		Unclassifiable/Attainment.
Kleberg County		Unclassifiable/Attainment.
Lavaca County		Unclassifiable/Attainment.
Live Oak County		Unclassifiable/Attainment.
McMullen County		Unclassifiable/Attainment.
Refugio County		Unclassifiable/Attainment.
San Patricio County		Unclassifiable/Attainment.
AQCR 215 Metro Dallas-Fort Worth Intrastate (remainder of):		
Cooke County		Unclassifiable/Attainment.
Erath County		Unclassifiable/Attainment.
Fannin County		Unclassifiable/Attainment.
Grayson County		Unclassifiable/Attainment.
Henderson County		Unclassifiable/Attainment.
Hood County		Unclassifiable/Attainment.
Hunt County		Unclassifiable/Attainment.
Navarro County		Unclassifiable/Attainment.
Palo Pinto County		Unclassifiable/Attainment.
Somervell County		Unclassifiable/Attainment.
Wise County		Unclassifiable/Attainment.

Texas—$PM_{2.5}$ (Annual NAAQS)

Designated area	Designation [a]	
	Date [1]	Type
AQCR 216 Metro Houston-Galveston Intrastate (remainder of):		
Austin County		Unclassifiable/Attainment.
Colorado County		Unclassifiable/Attainment.
Matagorda County		Unclassifiable/Attainment.
Walker County		Unclassifiable/Attainment.
Wharton County		Unclassifiable/Attainment.
AQCR 217 Metro San Antonio Intrastate (remainder of):		
Atascosa County		Unclassifiable/Attainment.
Bandera County		Unclassifiable/Attainment.
Dimmit County		Unclassifiable/Attainment.
Edwards County		Unclassifiable/Attainment.
Frio County		Unclassifiable/Attainment.
Gillespie County		Unclassifiable/Attainment.
Karnes County		Unclassifiable/Attainment.
Kendall County		Unclassifiable/Attainment.
Kerr County		Unclassifiable/Attainment.
Kinney County		Unclassifiable/Attainment.
La Salle County		Unclassifiable/Attainment.
Maverick County		Unclassifiable/Attainment.
Medina County		Unclassifiable/Attainment.
Real County		Unclassifiable/Attainment.
Uvalde County		Unclassifiable/Attainment.
Val Verde County		Unclassifiable/Attainment.
Wilson County		Unclassifiable/Attainment.
Zavala County		Unclassifiable/Attainment.
AQCR 218 Midland-Odessa-San Angelo Intrastate (part):		
Ector County		Unclassifiable/Attainment.
AQCR 218 Midland-Odessa-San Angelo Intrastate (remainder of):		
Andrews County		Unclassifiable/Attainment.
Borden County		Unclassifiable/Attainment.
Coke County		Unclassifiable/Attainment.
Concho County		Unclassifiable/Attainment.
Crane County		Unclassifiable/Attainment.
Crockett County		Unclassifiable/Attainment.
Dawson County		Unclassifiable/Attainment.
Gaines County		Unclassifiable/Attainment.
Glasscock County		Unclassifiable/Attainment.
Howard County		Unclassifiable/Attainment.
Irion County		Unclassifiable/Attainment.
Kimble County		Unclassifiable/Attainment.
Loving County		Unclassifiable/Attainment.
McCulloch County		Unclassifiable/Attainment.
Martin County		Unclassifiable/Attainment.
Mason County		Unclassifiable/Attainment.
Menard County		Unclassifiable/Attainment.
Midland County		Unclassifiable/Attainment.
Pecos County		Unclassifiable/Attainment.
Reagan County		Unclassifiable/Attainment.
Reeves County		Unclassifiable/Attainment.
Schleicher County		Unclassifiable/Attainment.
Sterling County		Unclassifiable/Attainment.
Sutton County		Unclassifiable/Attainment.
Terrell County		Unclassifiable/Attainment.
Tom Green County		Unclassifiable/Attainment.
Upton County		Unclassifiable/Attainment.
Ward County		Unclassifiable/Attainment.
Winkler County		Unclassifiable/Attainment.
Beaumont/Port Arthur, TX:		
Hardin County		Unclassifiable/Attainment.
Jefferson County		Unclassifiable/Attainment.
Orange County		Unclassifiable/Attainment.
Dallas-Fort Worth, TX:		
Collin County		Unclassifiable/Attainment.
Dallas County		Unclassifiable/Attainment.
Denton County		Unclassifiable/Attainment.
Ellis County		Unclassifiable/Attainment.
Johnson County		Unclassifiable/Attainment.
Kaufman County		Unclassifiable/Attainment.
Parker County		Unclassifiable/Attainment.
Rockwall County		Unclassifiable/Attainment.
Tarrant County		Unclassifiable/Attainment.

Texas—$PM_{2.5}$ (Annual NAAQS)

Designated area	Designation [a]	
	Date [1]	Type
Houston-Galveston-Brazoria, TX:		
Brazoria County		Unclassifiable/Attainment.
Chambers County		Unclassifiable/Attainment.
Fort Bend County		Unclassifiable/Attainment.
Galveston County		Unclassifiable/Attainment.
Harris County		Unclassifiable/Attainment.
Liberty County		Unclassifiable/Attainment.
Montgomery County		Unclassifiable/Attainment.
Waller County		Unclassifiable/Attainment.
San Antonio, TX:		
Bexar County		Unclassifiable/Attainment.
Comal County		Unclassifiable/Attainment.
Guadalupe County		Unclassifiable/Attainment.
Victoria Area:		
Victoria County		Unclassifiable/Attainment.

[a] Includes Indian Country located in each county or area, except as otherwise specified.
[1] This date is 90 days after January 5, 2005, unless otherwise noted.

Texas—$PM_{2.5}$ [24-hour NAAQS]

Designated area	Designation for the 1997 NAAQS [a]		Designation for the 2006 NAAQS [a]	
	Date [1]	Type	Date [2]	Type
AQCR 022 Shreveport-Texarkana-Tyler Interstate:				
Anderson County		Unclassifiable/Attainment		Unclassifiable/Attainment.
Bowie County		Unclassifiable/Attainment		Unclassifiable/Attainment.
Camp County		Unclassifiable/Attainment		Unclassifiable/Attainment.
Cass County		Unclassifiable/Attainment		Unclassifiable/Attainment.
Cherokee County		Unclassifiable/Attainment		Unclassifiable/Attainment.
Delta County		Unclassifiable/Attainment		Unclassifiable/Attainment.
Franklin County		Unclassifiable/Attainment		Unclassifiable/Attainment.
Gregg County		Unclassifiable/Attainment		Unclassifiable/Attainment.
Harrison County		Unclassifiable/Attainment		Unclassifiable/Attainment.
Hopkins County		Unclassifiable/Attainment		Unclassifiable/Attainment.
Lamar County		Unclassifiable/Attainment		Unclassifiable/Attainment.
Marion County		Unclassifiable/Attainment		Unclassifiable/Attainment.
Morris County		Unclassifiable/Attainment		Unclassifiable/Attainment.
Panola County		Unclassifiable/Attainment		Unclassifiable/Attainment.
Rains County		Unclassifiable/Attainment		Unclassifiable/Attainment.
Red River County		Unclassifiable/Attainment		Unclassifiable/Attainment.
Rusk County		Unclassifiable/Attainment		Unclassifiable/Attainment.
Smith County		Unclassifiable/Attainment		Unclassifiable/Attainment.
Titus County		Unclassifiable/Attainment		Unclassifiable/Attainment.
Upshur County		Unclassifiable/Attainment		Unclassifiable/Attainment.
Van Zandt County		Unclassifiable/Attainment		Unclassifiable/Attainment.
Wood County		Unclassifiable/Attainment		Unclassifiable/Attainment.

Texas—$PM_{2.5}$ [24-hour NAAQS]

Designated area	Designation for the 1997 NAAQS [a]		Designation for the 2006 NAAQS [a]	
	Date [1]	Type	Date [2]	Type
AQCR 106 S Louisiana-SE Texas Interstate (remainder of):				
Angelina County		Unclassifiable/Attainment		Unclassifiable/Attainment.
Houston County		Unclassifiable/Attainment		Unclassifiable/Attainment.
Jasper County		Unclassifiable/Attainment		Unclassifiable/Attainment.
Nacogdoches County		Unclassifiable/Attainment		Unclassifiable/Attainment.
Newton County		Unclassifiable/Attainment		Unclassifiable/Attainment.
Polk County		Unclassifiable/Attainment		Unclassifiable/Attainment.
Sabine County		Unclassifiable/Attainment		Unclassifiable/Attainment.
San Augustine County		Unclassifiable/Attainment		Unclassifiable/Attainment.
San Jacinto County		Unclassifiable/Attainment		Unclassifiable/Attainment.
Shelby County		Unclassifiable/Attainment		Unclassifiable/Attainment.
Trinity County		Unclassifiable/Attainment		Unclassifiable/Attainment.
Tyler County		Unclassifiable/Attainment		Unclassifiable/Attainment.
AQCR 153 El Paso-Las Cruces-Alamogordo Interstate:				
Brewster County		Unclassifiable/Attainment		Unclassifiable/Attainment.
Culberson County		Unclassifiable/Attainment		Unclassifiable/Attainment.
El Paso County		Unclassifiable/Attainment		Unclassifiable/Attainment.
Hudspeth County		Unclassifiable/Attainment		Unclassifiable/Attainment.
Jeff Davis County		Unclassifiable/Attainment		Unclassifiable/Attainment.
Presidio County		Unclassifiable/Attainment		Unclassifiable/Attainment.
AQCR 210 Abilene-Wichita Falls Intrastate:				
Archer County		Unclassifiable/Attainment		Unclassifiable/Attainment.
Baylor County		Unclassifiable/Attainment		Unclassifiable/Attainment.
Brown County		Unclassifiable/Attainment		Unclassifiable/Attainment.
Callahan County		Unclassifiable/Attainment		Unclassifiable/Attainment.
Clay County		Unclassifiable/Attainment		Unclassifiable/Attainment.
Coleman County		Unclassifiable/Attainment		Unclassifiable/Attainment.
Comanche County		Unclassifiable/Attainment		Unclassifiable/Attainment.
Cottle County		Unclassifiable/Attainment		Unclassifiable/Attainment.
Eastland County		Unclassifiable/Attainment		Unclassifiable/Attainment.
Fisher County		Unclassifiable/Attainment		Unclassifiable/Attainment.
Foard County		Unclassifiable/Attainment		Unclassifiable/Attainment.
Hardeman County		Unclassifiable/Attainment		Unclassifiable/Attainment.
Haskell County		Unclassifiable/Attainment		Unclassifiable/Attainment.
Jack County		Unclassifiable/Attainment		Unclassifiable/Attainment.
Jones County		Unclassifiable/Attainment		Unclassifiable/Attainment.

Texas—$PM_{2.5}$ [24-hour NAAQS]

Designated area	Designation for the 1997 NAAQS [a]		Designation for the 2006 NAAQS [a]	
	Date [1]	Type	Date [2]	Type
Kent County		Unclassifiable/Attainment		Unclassifiable/Attainment.
Knox County		Unclassifiable/Attainment		Unclassifiable/Attainment.
Mitchell County		Unclassifiable/Attainment		Unclassifiable/Attainment.
Montague County		Unclassifiable/Attainment		Unclassifiable/Attainment.
Nolan County		Unclassifiable/Attainment		Unclassifiable/Attainment.
Runnels County		Unclassifiable/Attainment		Unclassifiable/Attainment.
Scurry County		Unclassifiable/Attainment		Unclassifiable/Attainment.
Shackelford County		Unclassifiable/Attainment		Unclassifiable/Attainment.
Stephens County		Unclassifiable/Attainment		Unclassifiable/Attainment.
Stonewall County		Unclassifiable/Attainment		Unclassifiable/Attainment.
Taylor County		Unclassifiable/Attainment		Unclassifiable/Attainment.
Throckmorton County		Unclassifiable/Attainment		Unclassifiable/Attainment.
Wichita County		Unclassifiable/Attainment		Unclassifiable/Attainment.
Wilbarger County		Unclassifiable/Attainment		Unclassifiable/Attainment.
Young County		Unclassifiable/Attainment		Unclassifiable/Attainment.
AQCR 211 Amarillo-Lubbock Intrastate:				
Armstrong County		Unclassifiable/Attainment		Unclassifiable/Attainment.
Bailey County		Unclassifiable/Attainment		Unclassifiable/Attainment.
Briscoe County		Unclassifiable/Attainment		Unclassifiable/Attainment.
Carson County		Unclassifiable/Attainment		Unclassifiable/Attainment.
Castro County		Unclassifiable/Attainment		Unclassifiable/Attainment.
Childress County		Unclassifiable/Attainment		Unclassifiable/Attainment.
Cochran County		Unclassifiable/Attainment		Unclassifiable/Attainment.
Collingsworth County		Unclassifiable/Attainment		Unclassifiable/Attainment.
Crosby County		Unclassifiable/Attainment		Unclassifiable/Attainment.
Dallam County		Unclassifiable/Attainment		Unclassifiable/Attainment.
Deaf Smith County		Unclassifiable/Attainment		Unclassifiable/Attainment.
Dickens County		Unclassifiable/Attainment		Unclassifiable/Attainment.
Donley County		Unclassifiable/Attainment		Unclassifiable/Attainment.
Floyd County		Unclassifiable/Attainment		Unclassifiable/Attainment.
Garza County		Unclassifiable/Attainment		Unclassifiable/Attainment.
Gray County		Unclassifiable/Attainment		Unclassifiable/Attainment.
Hale County		Unclassifiable/Attainment		Unclassifiable/Attainment.
Hall County		Unclassifiable/Attainment		Unclassifiable/Attainment.
Hansford County		Unclassifiable/Attainment		Unclassifiable/Attainment.
Hartley County		Unclassifiable/Attainment		Unclassifiable/Attainment.

Texas—$PM_{2.5}$ [24-hour NAAQS]

Designated area	Designation for the 1997 NAAQS [a]		Designation for the 2006 NAAQS [a]	
	Date [1]	Type	Date [2]	Type
Hemphill County		Unclassifiable/Attainment		Unclassifiable/Attainment.
Hockley County		Unclassifiable/Attainment		Unclassifiable/Attainment.
Hutchinson County		Unclassifiable/Attainment		Unclassifiable/Attainment.
King County		Unclassifiable/Attainment		Unclassifiable/Attainment.
Lamb County		Unclassifiable/Attainment		Unclassifiable/Attainment.
Lipscomb County		Unclassifiable/Attainment		Unclassifiable/Attainment.
Lubbock County		Unclassifiable/Attainment		Unclassifiable/Attainment.
Lynn County		Unclassifiable/Attainment		Unclassifiable/Attainment.
Moore County		Unclassifiable/Attainment		Unclassifiable/Attainment.
Motley County		Unclassifiable/Attainment		Unclassifiable/Attainment.
Ochiltree County		Unclassifiable/Attainment		Unclassifiable/Attainment.
Oldham County		Unclassifiable/Attainment		Unclassifiable/Attainment.
Parmer County		Unclassifiable/Attainment		Unclassifiable/Attainment.
Potter County		Unclassifiable/Attainment		Unclassifiable/Attainment.
Randall County		Unclassifiable/Attainment		Unclassifiable/Attainment.
Roberts County		Unclassifiable/Attainment		Unclassifiable/Attainment.
Sherman County		Unclassifiable/Attainment		Unclassifiable/Attainment.
Swisher County		Unclassifiable/Attainment		Unclassifiable/Attainment.
Terry County		Unclassifiable/Attainment		Unclassifiable/Attainment.
Wheeler County		Unclassifiable/Attainment		Unclassifiable/Attainment.
Yoakum County		Unclassifiable/Attainment		Unclassifiable/Attainment.
AQCR 212 Austin-Waco Intrastate:				
Bastrop County		Unclassifiable/Attainment		Unclassifiable/Attainment.
Bell County		Unclassifiable/Attainment		Unclassifiable/Attainment.
Blanco County		Unclassifiable/Attainment		Unclassifiable/Attainment.
Bosque County		Unclassifiable/Attainment		Unclassifiable/Attainment.
Brazoe County		Unclassifiable/Attainment		Unclassifiable/Attainment.
Burleson County		Unclassifiable/Attainment		Unclassifiable/Attainment.
Burnet County		Unclassifiable/Attainment		Unclassifiable/Attainment.
Caldwell County		Unclassifiable/Attainment		Unclassifiable/Attainment.
Coryell County		Unclassifiable/Attainment		Unclassifiable/Attainment.
Falls County		Unclassifiable/Attainment		Unclassifiable/Attainment.
Fayette County		Unclassifiable/Attainment		Unclassifiable/Attainment.
Freestone County		Unclassifiable/Attainment		Unclassifiable/Attainment.
Grimes County		Unclassifiable/Attainment		Unclassifiable/Attainment.
Hamilton County		Unclassifiable/Attainment		Unclassifiable/Attainment.

Texas—$PM_{2.5}$ [24-hour NAAQS]

Designated area	Designation for the 1997 NAAQS [a]		Designation for the 2006 NAAQS [a]	
	Date [1]	Type	Date [2]	Type
Hays County		Unclassifiable/Attainment		Unclassifiable/Attainment.
Hill County		Unclassifiable/Attainment		Unclassifiable/Attainment.
Lampasas County		Unclassifiable/Attainment		Unclassifiable/Attainment.
Lee County		Unclassifiable/Attainment		Unclassifiable/Attainment.
Leon County		Unclassifiable/Attainment		Unclassifiable/Attainment.
Limestone County		Unclassifiable/Attainment		Unclassifiable/Attainment.
Llano County		Unclassifiable/Attainment		Unclassifiable/Attainment.
McLennan County		Unclassifiable/Attainment		Unclassifiable/Attainment.
Madison County		Unclassifiable/Attainment		Unclassifiable/Attainment.
Milam County		Unclassifiable/Attainment		Unclassifiable/Attainment.
Mills County		Unclassifiable/Attainment		Unclassifiable/Attainment.
Robertson County		Unclassifiable/Attainment		Unclassifiable/Attainment.
San Saba County		Unclassifiable/Attainment		Unclassifiable/Attainment.
Travis County		Unclassifiable/Attainment		Unclassifiable/Attainment.
Washington County		Unclassifiable/Attainment		Unclassifiable/Attainment.
Williamson County		Unclassifiable/Attainment		Unclassifiable/Attainment.
AQCR 213 Brownsville-Laredo Intrastate:				
Cameron County		Unclassifiable/Attainment		Unclassifiable/Attainment.
Hidalgo County		Unclassifiable/Attainment		Unclassifiable/Attainment.
Jim Hogg County		Unclassifiable/Attainment		Unclassifiable/Attainment.
Starr County		Unclassifiable/Attainment		Unclassifiable/Attainment.
Webb County		Unclassifiable/Attainment		Unclassifiable/Attainment.
Willacy County		Unclassifiable/Attainment		Unclassifiable/Attainment.
Zapata County		Unclassifiable/Attainment		Unclassifiable/Attainment.
AQCR 214 Corpus Christi-Victoria Intrastate (part):				
Nueces County		Unclassifiable/Attainment		Unclassifiable/Attainment.
AQCR 214 Corpus Christi-Victoria Intrastate (remainder of):				
Aransas County		Unclassifiable/Attainment		Unclassifiable/Attainment.
Bee County		Unclassifiable/Attainment		Unclassifiable/Attainment.
Brooks County		Unclassifiable/Attainment		Unclassifiable/Attainment.
Calhoun County		Unclassifiable/Attainment		Unclassifiable/Attainment.
DeWitt County		Unclassifiable/Attainment		Unclassifiable/Attainment.
Duval County		Unclassifiable/Attainment		Unclassifiable/Attainment.
Goliad County		Unclassifiable/Attainment		Unclassifiable/Attainment.
Gonzales County		Unclassifiable/Attainment		Unclassifiable/Attainment.
Jackson County		Unclassifiable/Attainment		Unclassifiable/Attainment.

Texas—$PM_{2.5}$ [24-hour NAAQS]

Designated area	Designation for the 1997 NAAQS [a]		Designation for the 2006 NAAQS [a]	
	Date [1]	Type	Date [2]	Type
Jim Wells County		Unclassifiable/Attainment		Unclassifiable/Attainment.
Kenedy County		Unclassifiable/Attainment		Unclassifiable/Attainment.
Kleberg County		Unclassifiable/Attainment		Unclassifiable/Attainment.
Lavaca County		Unclassifiable/Attainment		Unclassifiable/Attainment.
Live Oak County		Unclassifiable/Attainment		Unclassifiable/Attainment.
McMullen County		Unclassifiable/Attainment		Unclassifiable/Attainment.
Refugio County		Unclassifiable/Attainment		Unclassifiable/Attainment.
San Patricio County		Unclassifiable/Attainment		Unclassifiable/Attainment.
AQCR 215 Metro Dallas-Fort Worth Intrastate (remainder of):				
Cooke County		Unclassifiable/Attainment		Unclassifiable/Attainment.
Erath County		Unclassifiable/Attainment		Unclassifiable/Attainment.
Fannin County		Unclassifiable/Attainment		Unclassifiable/Attainment.
Grayson County		Unclassifiable/Attainment		Unclassifiable/Attainment.
Henderson County		Unclassifiable/Attainment		Unclassifiable/Attainment.
Hood County		Unclassifiable/Attainment		Unclassifiable/Attainment.
Hunt County		Unclassifiable/Attainment		Unclassifiable/Attainment.
Navarro County		Unclassifiable/Attainment		Unclassifiable/Attainment.
Palo Pinto County		Unclassifiable/Attainment		Unclassifiable/Attainment.
Somervell County		Unclassifiable/Attainment		Unclassifiable/Attainment.
Wise County		Unclassifiable/Attainment		Unclassifiable/Attainment.
AQCR 216 Metro Houston-Galveston Intrastate (remainder of):				
Austin County		Unclassifiable/Attainment		Unclassifiable/Attainment.
Colorado County		Unclassifiable/Attainment		Unclassifiable/Attainment.
Matagorda County		Unclassifiable/Attainment		Unclassifiable/Attainment.
Walker County		Unclassifiable/Attainment		Unclassifiable/Attainment.
Wharton County		Unclassifiable/Attainment		Unclassifiable/Attainment.
AQCR 217 Metro San Antonio Intrastate (remainder of):				
Atascosa County		Unclassifiable/Attainment		Unclassifiable/Attainment.
Bandera County		Unclassifiable/Attainment		Unclassifiable/Attainment.
Dimmit County		Unclassifiable/Attainment		Unclassifiable/Attainment.
Edwards County		Unclassifiable/Attainment		Unclassifiable/Attainment.
Frio County		Unclassifiable/Attainment		Unclassifiable/Attainment.
Gillespie County		Unclassifiable/Attainment		Unclassifiable/Attainment.
Karnes County		Unclassifiable/Attainment		Unclassifiable/Attainment.
Kendall County		Unclassifiable/Attainment		Unclassifiable/Attainment.

Texas—$PM_{2.5}$ [24-hour NAAQS]

Designated area	Designation for the 1997 NAAQS [a]		Designation for the 2006 NAAQS [a]	
	Date [1]	Type	Date [2]	Type
Kerr County		Unclassifiable/Attainment		Unclassifiable/Attainment.
Kinney County		Unclassifiable/Attainment		Unclassifiable/Attainment.
La Salle County		Unclassifiable/Attainment		Unclassifiable/Attainment.
Maverick County		Unclassifiable/Attainment		Unclassifiable/Attainment.
Medina County		Unclassifiable/Attainment		Unclassifiable/Attainment.
Real County		Unclassifiable/Attainment		Unclassifiable/Attainment.
Uvalde County		Unclassifiable/Attainment		Unclassifiable/Attainment.
Val Verde County		Unclassifiable/Attainment		Unclassifiable/Attainment.
Wilson County		Unclassifiable/Attainment		Unclassifiable/Attainment.
Zavala County		Unclassifiable/Attainment		Unclassifiable/Attainment.
AQCR 218 Midland-Odessa-San Angelo Intrastate (part):				
Ector County		Unclassifiable/Attainment		Unclassifiable/Attainment.
AQCR 218 Midland-Odessa-San Angelo Intrastate (remainder of):				
Andrews County		Unclassifiable/Attainment		Unclassifiable/Attainment.
Borden County		Unclassifiable/Attainment		Unclassifiable/Attainment.
Coke County		Unclassifiable/Attainment		Unclassifiable/Attainment.
Concho County		Unclassifiable/Attainment		Unclassifiable/Attainment.
Crane County		Unclassifiable/Attainment		Unclassifiable/Attainment.
Crockett County		Unclassifiable/Attainment		Unclassifiable/Attainment.
Dawson County		Unclassifiable/Attainment		Unclassifiable/Attainment.
Gaines County		Unclassifiable/Attainment		Unclassifiable/Attainment.
Glasscock County		Unclassifiable/Attainment		Unclassifiable/Attainment.
Howard County		Unclassifiable/Attainment		Unclassifiable/Attainment.
Irion County		Unclassifiable/Attainment		Unclassifiable/Attainment.
Kimble County		Unclassifiable/Attainment		Unclassifiable/Attainment.
Loving County		Unclassifiable/Attainment		Unclassifiable/Attainment.
McCulloch County		Unclassifiable/Attainment		Unclassifiable/Attainment.
Martin County		Unclassifiable/Attainment		Unclassifiable/Attainment.
Mason County		Unclassifiable/Attainment		Unclassifiable/Attainment.
Menard County		Unclassifiable/Attainment		Unclassifiable/Attainment.
Midland County		Unclassifiable/Attainment		Unclassifiable/Attainment.
Pecos County		Unclassifiable/Attainment		Unclassifiable/Attainment.
Reagan County		Unclassifiable/Attainment		Unclassifiable/Attainment.
Reeves County		Unclassifiable/Attainment		Unclassifiable/Attainment.
Schleicher County		Unclassifiable/Attainment		Unclassifiable/Attainment.

Texas—$PM_{2.5}$ [24-hour NAAQS]

Designated area	Designation for the 1997 NAAQS [a]		Designation for the 2006 NAAQS [a]	
	Date [1]	Type	Date [2]	Type
Sterling County		Unclassifiable/Attainment		Unclassifiable/Attainment.
Sutton County		Unclassifiable/Attainment		Unclassifiable/Attainment.
Terrell County		Unclassifiable/Attainment		Unclassifiable/Attainment.
Tom Green County		Unclassifiable/Attainment		Unclassifiable/Attainment.
Upton County		Unclassifiable/Attainment		Unclassifiable/Attainment.
Ward County		Unclassifiable/Attainment		Unclassifiable/Attainment.
Winkler County		Unclassifiable/Attainment		Unclassifiable/Attainment.
Beaumont/Port Arthur, TX:				
Hardin County		Unclassifiable/Attainment		Unclassifiable/Attainment.
Jefferson County		Unclassifiable/Attainment		Unclassifiable/Attainment.
Orange County		Unclassifiable/Attainment		Unclassifiable/Attainment.
Dallas-Fort Worth, TX:				
Collin County		Unclassifiable/Attainment		Unclassifiable/Attainment.
Dallas County		Unclassifiable/Attainment		Unclassifiable/Attainment.
Denton County		Unclassifiable/Attainment		Unclassifiable/Attainment.
Ellis County		Unclassifiable/Attainment		Unclassifiable/Attainment.
Johnson County		Unclassifiable/Attainment		Unclassifiable/Attainment.
Kaufman County		Unclassifiable/Attainment		Unclassifiable/Attainment.
Parker County		Unclassifiable/Attainment		Unclassifiable/Attainment.
Rockwell County		Unclassifiable/Attainment		Unclassifiable/Attainment.
Tarrant County		Unclassifiable/Attainment		Unclassifiable/Attainment.
Houston-Galveston-Brazoria, TX:				
Brazoria County		Unclassifiable/Attainment		Unclassifiable/Attainment.
Chambers County		Unclassifiable/Attainment		Unclassifiable/Attainment.
Fort Bend County		Unclassifiable/Attainment		Unclassifiable/Attainment.
Galveston County		Unclassifiable/Attainment		Unclassifiable/Attainment.
Harris County		Unclassifiable/Attainment		Unclassifiable/Attainment.
Liberty County		Unclassifiable/Attainment		Unclassifiable/Attainment.
Montgomery County		Unclassifiable/Attainment		Unclassifiable/Attainment.
Waller County		Unclassifiable/Attainment		Unclassifiable/Attainment.
San Antonio, TX:				
Bexar County		Unclassifiable/Attainment		Unclassifiable/Attainment.
Comal County		Unclassifiable/Attainment		Unclassifiable/Attainment.
Guadalupe County		Unclassifiable/Attainment		Unclassifiable/Attainment.
Victoria Area:				
Victoria County		Unclassifiable/Attainment		Unclassifiable/Attainment.

[a] Includes Indian Country located in each county or area, except as otherwise specified.
[1] This date is 90 days after January 5, 2005, unless otherwise noted.
[2] This date is 30 days after November 13, 2009, unless otherwise noted.

Texas–1978 Lead NAAQS

Designated area	Designation		Classification	
	Date	Type	Date	Type
Collin County (all)	12/13/99	Attainment		
Eastside:				
Starting at the intersection of south Fifth St. and the fence line approximately 1000′ south of the GNB property line going north to the intersection of south Fifth St. and Eubanks St.;				
Northside:				
Proceeding west on Eubanks to the Burlington Railroad tracks;				
Westside:				
Along Burlington Railroad tracks to the fence line approximately 1000′ south of the GNB property line;				
Southside:				
Fence line approximately 1000′ south of the GNB property line.				
Bexar County (part)				
Northside:				
Starting at intersection of Loop 1604 and Nelson Gardens Road and along the Nelson Gardens Road to Covel Road;				
Eastside:				
Along Covel Road to Pearsall Road and along Pearsall Road to Nelson Road;				
Southside:				
Along Nelson Road to where it intersects with Loop 1604;				
Westside:				
Along Loop 1604 where it intersects with Nelson Gardens Road.				
Rest of State Not Designated.				

[1] This date is November 15, 1990, unless otherwise noted.

Texas—2008 Lead NAAQS

Designated area	Designation for the 2008 NAAQS [a]	
	Date [1]	Type
Frisco, TX:		
Collin County (part)	12/31/10	Nonattainment.
The area immediately surrounding the Exide Technologies battery recycling plant in Frisco, bounded to the north by latitude 33.153 North, to the east by longitude 96.822 West, to the south by latitude 33.131 North, and to the west by longitude 96.837 West.		
Rest of State		Unclassifiable/Attainment.

[a] Includes Indian Country located in each county or area, except as otherwise specified.
[1] December 31, 2011 unless otherwise noted.

[43 FR 8964, Mar. 3, 1978]

EDITORIAL NOTE: For FEDERAL REGISTER citations affecting §81.344 see the List of CFR Sections Affected, which appears in the Finding Aids section of the printed volume and at *www.fdsys.gov*.

EFFECTIVE DATE NOTE: At 77 FR 30147, May 21, 2012, §81.344 was amended by revising the table heading for ''Texas—Ozone (8-Hour Standard)'' to read ''Texas—1997 8-Hour Ozone NAAQS (Primary and Secondary)''; by adding a new table entitled ''Texas—2008 8-Hour Ozone NAAQS (Primary and Secondary)'' following the newly designated table ''Texas—1997 8-Hour Ozone NAAQS (Primary and Secondary)'', effective July 20, 2012. For the convenience of the user, the added text is set forth as follows:

§ 81.344 Texas.

* * * * *

Texas—2008 8-Hour Ozone NAAQS (Primary and secondary)

Designated area	Designation		Classification	
	Date [1]	Type	Date [1]	Type
Dallas-Fort Worth, TX: [2]	.....	Nonattainment	.....	Moderate.
Collin County				
Dallas County				
Denton County				
Ellis County				
Johnson County				
Kaufman County				
Parker County				
Rockwall County				
Tarrant County				
Wise County				
Houston-Galveston-Brazoria, TX: [2]	.....	Nonattainment	.....	Marginal.
Brazoria County				
Chambers County				
Fort Bend County				
Galveston County				
Harris County				
Liberty County				
Montgomery County				
Waller County				
Rest of State: [3]				
Anderson County	.....	Unclassifiable/Attainment		
Andrews County	.....	Unclassifiable/Attainment		
Angelina County	.....	Unclassifiable/Attainment		
Aransas County	.....	Unclassifiable/Attainment		
Archer County	.....	Unclassifiable/Attainment		
Armstrong County	.....	Unclassifiable/Attainment		
Atascosa County	.....	Unclassifiable/Attainment		
Austin County	.....	Unclassifiable/Attainment		
Bailey County	.....	Unclassifiable/Attainment		
Bandera County	.....	Unclassifiable/Attainment		
Bastrop County	.....	Unclassifiable/Attainment		
Baylor County	.....	Unclassifiable/Attainment		
Bee County	.....	Unclassifiable/Attainment		
Bell County	.....	Unclassifiable/Attainment		
Bexar County	.....	Unclassifiable/Attainment		
Blanco County	.....	Unclassifiable/Attainment		
Borden County	.....	Unclassifiable/Attainment		
Bosque County	.....	Unclassifiable/Attainment		
Bowie County	.....	Unclassifiable/Attainment		
Brazos County	.....	Unclassifiable/Attainment		
Brewster County	.....	Unclassifiable/Attainment		
Briscoe County	.....	Unclassifiable/Attainment		
Brooks County	.....	Unclassifiable/Attainment		
Brown County	.....	Unclassifiable/Attainment		
Burleson County	.....	Unclassifiable/Attainment		
Burnet County	.....	Unclassifiable/Attainment		
Caldwell County	.....	Unclassifiable/Attainment		
Calhoun County	.....	Unclassifiable/Attainment		
Callahan County	.....	Unclassifiable/Attainment		
Cameron County	.....	Unclassifiable/Attainment		
Camp County	.....	Unclassifiable/Attainment		
Carson County	.....	Unclassifiable/Attainment		
Cass County	.....	Unclassifiable/Attainment		
Castro County	.....	Unclassifiable/Attainment		
Cherokee County	.....	Unclassifiable/Attainment		
Childress County	.....	Unclassifiable/Attainment		
Clay County	.....	Unclassifiable/Attainment		
Cochran County	.....	Unclassifiable/Attainment		
Coke County	.....	Unclassifiable/Attainment		
Coleman County	.....	Unclassifiable/Attainment		
Collingsworth County	.....	Unclassifiable/Attainment		
Colorado County	.....	Unclassifiable/Attainment		
Comal County	.....	Unclassifiable/Attainment		
Comanche County	.....	Unclassifiable/Attainment		
Concho County	.....	Unclassifiable/Attainment		

Texas—2008 8-Hour Ozone NAAQS (Primary and secondary)

Designated area	Designation		Classification	
	Date [1]	Type	Date [1]	Type
Cooke County		Unclassifiable/Attainment		
Coryell County		Unclassifiable/Attainment		
Cottle County		Unclassifiable/Attainment		
Crane County		Unclassifiable/Attainment		
Crockett County		Unclassifiable/Attainment		
Crosby County		Unclassifiable/Attainment		
Culberson County		Unclassifiable/Attainment		
Dallam County		Unclassifiable/Attainment		
Dawson County		Unclassifiable/Attainment		
Deaf Smith County		Unclassifiable/Attainment		
Delta County		Unclassifiable/Attainment		
DeWitt County		Unclassifiable/Attainment		
Dickens County		Unclassifiable/Attainment		
Dimmit County		Unclassifiable/Attainment		
Donley County		Unclassifiable/Attainment		
Duval County		Unclassifiable/Attainment		
Eastland County		Unclassifiable/Attainment		
Ector County		Unclassifiable/Attainment		
Edwards County		Unclassifiable/Attainment		
El Paso County		Unclassifiable/Attainment		
Erath County		Unclassifiable/Attainment		
Falls County		Unclassifiable/Attainment		
Fannin County		Unclassifiable/Attainment		
Fayette County		Unclassifiable/Attainment		
Fisher County		Unclassifiable/Attainment		
Floyd County		Unclassifiable/Attainment		
Foard County		Unclassifiable/Attainment		
Franklin County		Unclassifiable/Attainment		
Freestone County		Unclassifiable/Attainment		
Frio County		Unclassifiable/Attainment		
Gaines County		Unclassifiable/Attainment		
Garza County		Unclassifiable/Attainment		
Gillespie County		Unclassifiable/Attainment		
Glasscock County		Unclassifiable/Attainment		
Goliad County		Unclassifiable/Attainment		
Gonzales County		Unclassifiable/Attainment		
Gray County		Unclassifiable/Attainment		
Grayson County		Unclassifiable/Attainment		
Gregg County		Unclassifiable/Attainment		
Grimes County		Unclassifiable/Attainment		
Guadalupe County		Unclassifiable/Attainment		
Hale County		Unclassifiable/Attainment		
Hall County		Unclassifiable/Attainment		
Hamilton County		Unclassifiable/Attainment		
Hansford County		Unclassifiable/Attainment		
Hardeman County		Unclassifiable/Attainment		
Hardin County		Unclassifiable/Attainment		
Harrison County		Unclassifiable/Attainment		
Hartley County		Unclassifiable/Attainment		
Haskell County		Unclassifiable/Attainment		
Hays County		Unclassifiable/Attainment		
Hemphill County		Unclassifiable/Attainment		
Henderson County		Unclassifiable/Attainment		
Hidalgo County		Unclassifiable/Attainment		
Hill County		Unclassifiable/Attainment		
Hockley County		Unclassifiable/Attainment		
Hood County		Unclassifiable/Attainment		
Hopkins County		Unclassifiable/Attainment		
Houston County		Unclassifiable/Attainment		
Howard County		Unclassifiable/Attainment		
Hudspeth County		Unclassifiable/Attainment		
Hunt County		Unclassifiable/Attainment		
Hutchinson County		Unclassifiable/Attainment		
Irion County		Unclassifiable/Attainment		
Jack County		Unclassifiable/Attainment		
Jackson County		Unclassifiable/Attainment		
Jasper County		Unclassifiable/Attainment		
Jeff Davis County		Unclassifiable/Attainment		
Jefferson County		Unclassifiable/Attainment		
Jim Hogg County		Unclassifiable/Attainment		
Jim Wells County		Unclassifiable/Attainment		

Texas—2008 8-Hour Ozone NAAQS (Primary and secondary)

Designated area	Designation		Classification	
	Date [1]	Type	Date [1]	Type
Jones County		Unclassifiable/Attainment		
Karnes County		Unclassifiable/Attainment		
Kendall County		Unclassifiable/Attainment		
Kenedy County		Unclassifiable/Attainment		
Kent County		Unclassifiable/Attainment		
Kerr County		Unclassifiable/Attainment		
Kimble County		Unclassifiable/Attainment		
King County		Unclassifiable/Attainment		
Kinney County		Unclassifiable/Attainment		
Kleberg County		Unclassifiable/Attainment		
Knox County		Unclassifiable/Attainment		
La Salle County		Unclassifiable/Attainment		
Lamar County		Unclassifiable/Attainment		
Lamb County		Unclassifiable/Attainment		
Lampasas County		Unclassifiable/Attainment		
Lavaca County		Unclassifiable/Attainment		
Lee County	.	Unclassifiable/Attainment		
Leon County		Unclassifiable/Attainment		
Limestone County		Unclassifiable/Attainment		
Lipscomb County		Unclassifiable/Attainment		
Live Oak County		Unclassifiable/Attainment		
Llano County		Unclassifiable/Attainment		
Loving County		Unclassifiable/Attainment		
Lubbock County		Unclassifiable/Attainment		
Lynn County		Unclassifiable/Attainment		
McCulloch County		Unclassifiable/Attainment		
McLennan County		Unclassifiable/Attainment		
McMullen County		Unclassifiable/Attainment		
Madison County		Unclassifiable/Attainment		
Marion County		Unclassifiable/Attainment		
Martin County		Unclassifiable/Attainment		
Mason County		Unclassifiable/Attainment		
Matagorda County		Unclassifiable/Attainment		
Maverick County		Unclassifiable/Attainment		
Medina County		Unclassifiable/Attainment		
Menard County		Unclassifiable/Attainment		
Midland County		Unclassifiable/Attainment		
Milam County		Unclassifiable/Attainment		
Mills County		Unclassifiable/Attainment		
Mitchell County		Unclassifiable/Attainment		
Montague County		Unclassifiable/Attainment		
Moore County		Unclassifiable/Attainment		
Morris County		Unclassifiable/Attainment		
Motley County		Unclassifiable/Attainment		
Nacogdoches County		Unclassifiable/Attainment		
Navarro County		Unclassifiable/Attainment		
Newton County		Unclassifiable/Attainment		
Nolan County		Unclassifiable/Attainment		
Nueces County		Unclassifiable/Attainment		
Ochiltree County		Unclassifiable/Attainment		
Oldham County		Unclassifiable/Attainment		
Orange County		Unclassifiable/Attainment		
Palo Pinto County		Unclassifiable/Attainment		
Panola County		Unclassifiable/Attainment		
Parmer County		Unclassifiable/Attainment		
Pecos County		Unclassifiable/Attainment		
Polk County		Unclassifiable/Attainment		
Potter County		Unclassifiable/Attainment		
Presidio County		Unclassifiable/Attainment		
Rains County		Unclassifiable/Attainment		
Randall County		Unclassifiable/Attainment		
Reagan County		Unclassifiable/Attainment		
Real County		Unclassifiable/Attainment		
Red River County		Unclassifiable/Attainment		
Reeves County		Unclassifiable/Attainment		
Refugio County		Unclassifiable/Attainment		
Roberts County		Unclassifiable/Attainment		
Robertson County		Unclassifiable/Attainment		
Runnels County		Unclassifiable/Attainment		
Rusk County		Unclassifiable/Attainment		
Sabine County		Unclassifiable/Attainment		

Texas—2008 8-Hour Ozone NAAQS (Primary and secondary)

Designated area	Designation		Classification	
	Date [1]	Type	Date [1]	Type
San Augustine County		Unclassifiable/Attainment		
San Jacinto County		Unclassifiable/Attainment		
San Patricio County	.	Unclassifiable/Attainment		
San Saba County		Unclassifiable/Attainment		
Schleicher County		Unclassifiable/Attainment		
Scurry County		Unclassifiable/Attainment		
Shackelford County		Unclassifiable/Attainment		
Shelby County		Unclassifiable/Attainment		
Sherman County		Unclassifiable/Attainment		
Smith County		Unclassifiable/Attainment		
Somervell County		Unclassifiable/Attainment		
Starr County		Unclassifiable/Attainment		
Stephens County		Unclassifiable/Attainment		
Sterling County		Unclassifiable/Attainment		
Stonewall County		Unclassifiable/Attainment		
Sutton County		Unclassifiable/Attainment		
Swisher County		Unclassifiable/Attainment		
Taylor County		Unclassifiable/Attainment		
Terrell County		Unclassifiable/Attainment		
Terry County		Unclassifiable/Attainment		
Throckmorton County	.	Unclassifiable/Attainment		
Titus County		Unclassifiable/Attainment		
Tom Green County		Unclassifiable/Attainment		
Travis County		Unclassifiable/Attainment		
Trinity County		Unclassifiable/Attainment		
Tyler County		Unclassifiable/Attainment		
Upshur County		Unclassifiable/Attainment		
Upton County		Unclassifiable/Attainment		
Uvalde County		Unclassifiable/Attainment		
Val Verde County		Unclassifiable/Attainment		
Van Zandt County		Unclassifiable/Attainment		
Victoria County		Unclassifiable/Attainment		
Walker County		Unclassifiable/Attainment		
Ward County		Unclassifiable/Attainment		
Washington County		Unclassifiable/Attainment		
Webb County		Unclassifiable/Attainment		
Wharton County		Unclassifiable/Attainment		
Wheeler County		Unclassifiable/Attainment		
Wichita County		Unclassifiable/Attainment		
Wilbarger County		Unclassifiable/Attainment		
Willacy County		Unclassifiable/Attainment		
Williamson County		Unclassifiable/Attainment		
Wilson County		Unclassifiable/Attainment		
Winkler County		Unclassifiable/Attainment		
Wood County		Unclassifiable/Attainment		
Yoakum County		Unclassifiable/Attainment		
Young County		Unclassifiable/Attainment		
Zapata County		Unclassifiable/Attainment		
Zavala County		Unclassifiable/Attainment		

[1] This date is July 20, 2012, unless otherwise noted.
[2] Excludes Indian country located in each area, unless otherwise noted.
[3] Includes any Indian country in each county or area, unless otherwise specified.

* * * * *

§ 81.345 Utah.

Utah—SO_2

Designated area	Does not meet primary standards	Does not meet secondary standards	Cannot be classified	Better than national standards
Salt Lake County	[1] X	[1] X		
Portions of Tooele County	[1] X	[1] X		
Rest of State				X

[1] EPA designation replaces State designation.

Utah—Carbon Monoxide

Designated Area	Designation		Classification	
	Date [1]	Type	Date [1]	Type
Ogden Area				
Weber County (part)				
city of Ogden	5/8/01	Attainment		
Provo Area				
Utah County (part) city of Provo	1/3/06	Attainment		
Salt Lake City Area	3/22/99	Attainment		
Salt Lake County (part), Salt Lake City.				
Rest of State		Unclassifiable/Attainment		
Beaver County				
Box Elder County				
Cache County				
Carbon County				
Daggett County				
Davis County				
Duchesne County				
Emery County				
Garfield County				
Grand County				
Iron County				
Juab County				
Kane County				
Millard County				
Morgan County				
Piute County				
Rich County				
Salt Lake County (part)				
Remainder of Salt Lake County				
San Juan County				
Sanpete County				
Sevier County				
Summit County				
Tooele County				
Uintah County				
Utah County (part)				
Remainder of Utah county				
Wasatch County				
Washington County				
Wayne County				
Weber County (part)				
Remainder of Weber county				

[1] This date is November 15, 1990, unless otherwise noted.

Utah—Ozone (1-Hour Standard)[2]

Designated area	Designation		Classification	
	Date [1]	Type	Date [1]	Type
Salt Lake City Area:				
Davis County		Attainment		
Salt Lake County		Attainment		
Rest of State		Unclassifiable/Attainment		
Beaver County				
Box Elder County				
Cache County				
Carbon County				
Daggett County				
Duchesne County				
Emery County				
Garfield County				
Grand County				
Iron County				
Juab County				
Kane County				
Millard County				
Morgan County				
Piute County				
Rich County				
San Juan County				
Sanpete County				

Utah—Ozone (1-Hour Standard)[2]

Designated area	Designation		Classification	
	Date [1]	Type	Date [1]	Type
Sevier County				
Summit County				
Tooele County				
Uintah County				
Utah County				
Wasatch County				
Washington County				
Wayne County				
Weber County				

[1] This date is October 18, 2000, unless otherwise noted.
[2] The 1-hour ozone standard is revoked effective June 15, 2005 for all areas in Utah. The Salt Lake City area is a maintenance area for the 1-hour NAAQS for purposes of 40 CFR part 51 subpart X.

Utah—PM–10

Designated Area	Designation		Classification	
	Date	Type	Date	Type
Salt Lake County	11/15/90	Nonattainment	11/15/90	Moderate.
Utah County	11/15/90	Nonattainment	11/15/90	Moderate.
Ogden Area Weber County (part) City of Ogden	9/26/95	Nonattainment	9/26/95	Moderate.
Rest of State [1]	11/15/90	Unclassifiable	.....	

[1] Denotes a single area designation for PSD baseline area purposes.

Utah—NO_2 (1971 Annual Standard)

Designated area	Does not meet primary standards	Cannot be classified or better than national standards
Entire State	.....	X

Utah—NO_2 (2010 1-Hour Standard)

Designated area	Designation [a]	
	Date [1]	Type
Cache County	.....	Unclassifiable/Attainment.
Davis County	.....	Unclassifiable/Attainment.
Salt Lake County	.....	Unclassifiable/Attainment.
Utah County	.....	Unclassifiable/Attainment.
Weber County	.....	Unclassifiable/Attainment.
Rest of State	.....	Unclassifiable/Attainment.

[a] Includes Indian Country located in each county or area, except as otherwise specified.
[1] This date is 90 days after October 31, 2011, unless otherwise noted.

Utah—Ozone (8-Hour Standard)

Designated area	Designation [a]		Category/classification	
	Date [1]	Type	Date [1]	Type
Salt Lake City Area:				
Davis County	.....	Unclassifiable/Attainment		
Salt Lake County	.....	Unclassifiable/Attainment		
Rest of State:	.....	Unclassifiable/Attainment		
Beaver County				
Box Elder County				
Cache County				
Carbon County				
Daggett County				
Duchesne County				
Emery County				
Garfield County				
Grand County				
Iron County				
Juab County				
Kane County				
Millard County				
Morgan County				

Utah—Ozone (8-Hour Standard)

Designated area	Designation [a]		Category/classification	
	Date [1]	Type	Date [1]	Type
Piute County				
Rich County				
San Juan County				
Sanpete County				
Sevier County				
Summit County				
Tooele County				
Uintah County				
Utah County				
Wasatch County				
Washington County				
Wayne County				
Weber County				

[a] Includes Indian Country located in each county or area, except as otherwise specified.
[1] This date is June 15, 2004, unless otherwise noted.

Utah—$PM_{2.5}$ (Annual NAAQS)

Designated area	Designation [a]	
	Date [1]	Type
Box Elder County, UT (part):		
Box Elder County (except Brigham City)	.....	Unclassifiable/Attainment.
Brigham City, UT:		
Box Elder County (part)	.....	Unclassifiable/Attainment.
The area surrounding Brigham City, as described by the following Townships or the portions of the following Townships in Box Elder County: T9N 2W, T9N R1W, T8N 2W		
Cache County, UT (part):		
Cache County (except Lower Cache Valley)	.....	Unclassifiable/Attainment.
Davis County, UT (part):		
Davis County (except Wasatch Front)	.....	Unclassifiable/Attainment.
Grantsville, UT:		
Tooele County (part)	.....	Unclassifiable/Attainment.
The area surrounding Grantsville, as described by the following Townships or the portions of the following Townships in Tooele County: T2S R6W, T2S R5W, T2S R4W, T3S R6W, T3S R5W, T3S R4W, T4S R6W, T4S R5W, T4S R4W		
Lower Cache Valley, UT:		
Cache County (part)	.....	Unclassifiable/Attainment.
The Cache Valley, below 6500 ft. msl. This area is described by the following list of Townships or the portions of the following Townships in Cache County: T15N R1E, T15N R2W, T15N R1W, T14N R2W, T14N R1W, T14N R1E, T13N R2W, T13N R1W, T13N R1E, T12N R2W, T12N R1W, T12N R1E, T11N R1W, T11N R1E, T10N R1W, T10N R1E, T9N R1E		
Salt Lake County, UT (part)		
Salt Lake County (except Wasatch Front)	.....	Unclassifiable/Attainment.
Tooele County, UT (part):		
Tooele County (remainder)	.....	Unclassifiable/Attainment.
Utah County, UT (part):		
Utah County (except Wasatch Front)	.....	Unclassifiable/Attainment.
Wasatch Front, UT:		
Davis County (part)	.....	Unclassifiable/Attainment.
The portion of the Wasatch Front residing in Davis County, as described by the following Townships or the portions of the following Townships in Davis County: T5N R3W, T5N R2W, T5N R1W, T4N R2W, T4N R1W, T3N R1W, T3N R1E, T2N R1W, T2N R1E, T1N R1W, T1N R1E.		
Salt Lake County (part)	.....	Unclassifiable/Attainment.
The portion of the Wasatch Front residing in Salt Lake County, as described by the following Townships or the portions of the following Townships in Salt Lake County: T1N R2W, T1N R1W, T1N R1E, T1S R3W, T1S R2W, T1S R1W, T1S R1E, T2S R3W, T2S R2W, T2S R1W, T2S R1E, T3S R3W, T3S R2W, T3S R1W, T3S R1E, T4S R3W, T4S R2W, T4S R1W, T4S R1E.		
Utah County (part)	.....	Unclassifiable/Attainment.

Utah—$PM_{2.5}$ (Annual NAAQS)

Designated area	Designation [a]	
	Date [1]	Type
The portion of the Wasatch Front residing in Utah County, as described by the following Townships or the portions of the following Townships in Utah County: T4S R2W, T4S R1W, T4S R1E, T4S R2E, T5S R2W, T5S R1W, T5S R1E, T5S R2E, T6S R3W, T6S R2W, T6S R1W, T6S R2E, T6S R3E, T6S R1E, T7S R3W, T7S R2W, T7S R1W, T7S R1E, T7S R2E, T7S R3E, T8S R3W, T8S R2W, T8S R1W, T8S R3E, T8S R2E, T8S R1E, T9S R3W, T9S R2W, T9S R1E, T9S R3E, T9S R2E, T9S R1W, T10S 2W, T10S R2E, T10S R1E, T10S R1W, T1S R2W, T11S R1W, T12S R2W.		
Weber County (part)	.....	Unclassifiable/Attainment.
The portion of the Wasatch Front residing in Weber County, as described by the following Townships or the portions of the following Townships in Weber County: T7N R2W, T7N R1W, T7N R3W, T6N R3W, T6N R2W, T6N R1W, T5N R3W, T5N R2W, T5N R1W		
Weber County, UT (part):		
Weber County (except Wasatch Front)	.....	Unclassifiable/Attainment.
Rest of State:		
Beaver County	.....	Unclassifiable/Attainment.
Carbon County	.....	Unclassifiable/Attainment.
Daggett County	.....	Unclassifiable/Attainment.
Duchesne County	.....	Unclassifiable/Attainment.
Emery County	.....	Unclassifiable/Attainment.
Garfield County	.....	Unclassifiable/Attainment.
Grand County	.....	Unclassifiable/Attainment.
Iron County	.....	Unclassifiable/Attainment.
Juab County	.....	Unclassifiable/Attainment.
Kane County	.....	Unclassifiable/Attainment.
Millard County	.....	Unclassifiable/Attainment.
Morgan County	.....	Unclassifiable/Attainment.
Piute County	.....	Unclassifiable/Attainment.
Rich County	.....	Unclassifiable/Attainment.
San Juan County	.....	Unclassifiable/Attainment.
Sanpete County	.....	Unclassifiable/Attainment.
Sevier County	.....	Unclassifiable/Attainment.
Summit County	.....	Unclassifiable/Attainment.
Uintah County	.....	Unclassifiable/Attainment.
Wasatch County	.....	Unclassifiable/Attainment.
Washington County	.....	Unclassifiable/Attainment.
Wayne County	.....	Unclassifiable/Attainment.

[a] Includes Indian Country located in each county or area, except as otherwise specified.
[1] This date is 90 days after January 5, 2005, unless otherwise noted.

Utah—$PM_{2.5}$ [24-hour NAAQS]

Designated area	Designation for the 1997 NAAQS [a]		Designation for the 2006 NAAQS [a]	
	Date [1]	Type	Date [2]	Type
Logan, UT-ID:				
Cache County (part)	.....	Unclassifiable/Attainment	.....	Nonattainment.
All portions of Cache County west of and including any portion of the following townships located within Utah: Township 15 North Range 1 East; Township 14 North Range 1 East; Township 13 North Range 1 East; Township 12 North Range 1 East; Township 11 North Range 1 East; Township 10 North Range 1 East; Township 9 North Range 1 East.				
Provo, UT:				
Utah County (part)	.....	Unclassifiable/Attainment	.....	Nonattainment.

Utah—$PM_{2.5}$ [24-hour NAAQS]

Designated area	Designation for the 1997 NAAQS [a]		Designation for the 2006 NAAQS [a]	
	Date [1]	Type	Date [2]	Type
The area of Utah County that lies west of the Wasatch Mountain Range (and this includes the Cities of Provo and Orem) with an eastern boundary for Utah County to be defined as the following Townships: Township 3 South Range 1 East; Township 4 South Range 2 East; Township 5 South Range 3 East; Township 6 South Range 3 East; Township 7 South Range 3 East; Township 8 South Range 3 East; Township 9 South Range 3 East; Township 10 South Range 2 East.				
Salt Lake City, UT:				
Box Elder County (part)	.....	Unclassifiable/Attainment	.....	Nonattainment.

Utah—$PM_{2.5}$ [24-hour NAAQS]

Designated area	Designation for the 1997 NAAQS [a]		Designation for the 2006 NAAQS [a]	
	Date [1]	Type	Date [2]	Type
The following Townships or portions thereof as noted (including Brigham City): Township 7 North Range 2 West; Township 8 North Range 2 West; Township 9 North Range 2 West; Township 10 North Range 2 West; Township 11 North Range 2 West; Township 12 North Range 2 West; Township 13 North Range 2 West; Township 9 North Range 3 West; Township 10 North Range 3 West; Township 11 North Range 3 West; Township 12 North Range 3 West; Township 13 North Range 3 West; Township 13 North Range 4 West; Township 12 North Range 4 West; Township 11 North Range 4 West; Township 10 North Range 4 West; Township 9 North Range 4 West; Township 13 North Range 5 West; Township 12 North Range 5 West; Township 11 North Range 5 West; Township 10 North Range 5 West; Township 9 North Range 5 West; Township 13 North Range 6 West; Township 12 North Range 6 West; Township 11 North Range 6 West; Township 10 North Range 6 West; Township 9 North Range 6 West; Township 7 North Range 1 West (portion located in Box Elder County); Township 8 North Range 1 West (portion located in Box Elder County); Township 9 North Range 1 West (portion located in Box Elder County).				
Davis County		Unclassifiable/Attainment		Nonattainment.
Salt Lake County		Unclassifiable/Attainment		Nonattainment.
Tooele County (part)		Unclassifiable/Attainment		Nonattainment.

Utah—$PM_{2.5}$ [24-hour NAAQS]

Designated area	Designation for the 1997 NAAQS [a]		Designation for the 2006 NAAQS [a]	
	Date [1]	Type	Date [2]	Type
The following Townships or portions thereof as noted (including Tooele City: Township 1 South Range 3 West; Township 2 South Range 3 West; Township 3 South Range 3 West; Township 3 South Range 4 West; Township 2 South Range 4 West; Township 2 South Range 5 West; Township 3 South Range 5 West; Township 3 South Range 6 West; Township 2 South Range 6 West; Township 1 South Range 6 West; Township 1 South Range 5 West; Township 1 South Range 4 West; Township 1 South Range 7 West; Township 2 South Range 7 West; Township 3 South Range 7 West; all Sections within Township 4 South Range 7 West except for Sections 29, 30, 31 and 32; Township 4 South Range 6 West; Township 4 South Range 5 West; Township 4 South Range 4 West; Township 4 South Range 3 West.				
Weber County (part)		Unclassifiable/Attainment		Nonattainment.
The area of Weber County that lies west of the Wasatch Mountain Range with an eastern boundary for Weber County to be defined as the following Townships (or portion thereof) extending to the western boundary of Weber County: Township 5 North Range 1 West; Township 6 North Range 1 West; all Sections within Township 7 North Range 1 West located within Weber County except for Sections 1, 2, 3, 4, 11, 12, 13 and 24; Township 7 North Range 2 West (portion located in Weber County).				
Rest of State:				
Beaver County		Unclassifiable/Attainment		Unclassifiable/Attainment.
Box Elder County (remainder)		Unclassifiable/Attainment		Unclassifiable/Attainment.
Cache County (remainder)		Unclassifiable/Attainment		Unclassifiable/Attainment.
Carbon County		Unclassifiable/Attainment		Unclassifiable/Attainment.
Daggett County		Unclassifiable/Attainment		Unclassifiable/Attainment.

Utah—$PM_{2.5}$ [24-hour NAAQS]

Designated area	Designation for the 1997 NAAQS [a]		Designation for the 2006 NAAQS [a]	
	Date [1]	Type	Date [2]	Type
Duchesne County		Unclassifiable/Attainment		Unclassifiable/Attainment.
Emery County		Unclassifiable/Attainment		Unclassifiable/Attainment.
Garfield County		Unclassifiable/Attainment		Unclassifiable/Attainment.
Grand County		Unclassifiable/Attainment		Unclassifiable/Attainment.
Iron County		Unclassifiable/Attainment		Unclassifiable/Attainment.
Juab County		Unclassifiable/Attainment		Unclassifiable/Attainment.
Kane County		Unclassifiable/Attainment		Unclassifiable/Attainment.
Millard County		Unclassifiable/Attainment		Unclassifiable/Attainment.
Morgan County		Unclassifiable/Attainment		Unclassifiable/Attainment.
Piute County		Unclassifiable/Attainment		Unclassifiable/Attainment.
Rich County		Unclassifiable/Attainment		Unclassifiable/Attainment.
San Juan County		Unclassifiable/Attainment		Unclassifiable/Attainment.
Sanpete County		Unclassifiable/Attainment		Unclassifiable/Attainment.
Sevier County		Unclassifiable/Attainment		Unclassifiable/Attainment.
Summit County		Unclassifiable/Attainment		Unclassifiable/Attainment.
Tooele County (remainder)		Unclassifiable/Attainment		Unclassifiable/Attainment.
Uintah County		Unclassifiable/Attainment		Unclassifiable/Attainment.
Utah County (remainder)		Unclassifiable/Attainment		Unclassifiable/Attainment.
Wasatch County		Unclassifiable/Attainment		Unclassifiable/Attainment.
Washington County		Unclassifiable/Attainment		Unclassifiable/Attainment.
Wayne County		Unclassifiable/Attainment		Unclassifiable/Attainment.
Weber County (remainder)		Unclassifiable/Attainment		Unclassifiable/Attainment.

[a] Includes Indian Country located in each county or area, except as otherwise specified.
[1] This date is 90 days after January 5, 2005, unless otherwise noted.
[2] This date is 30 days after November 13, 2009, unless otherwise noted.

Utah—2008 Lead NAAQS

Designated area	Designation for the 2008 NAAQS [a]	
	Date [1]	Type
Whole State		Unclassifiable/Attainment.

[a] Includes Indian Country located in each county or area, except as otherwise specified.
[1] December 31, 2011 unless otherwise noted.

[43 FR 8964, Mar. 3, 1978]

EDITORIAL NOTE: For FEDERAL REGISTER citations affecting §81.346 see the List of CFR Sections Affected, which appears in the Finding Aids section of the printed volume and at *www.fdsys.gov*.

EFFECTIVE DATE NOTE: At 77 FR 30151, May 21, 2012, §81.345 was amended by revising the table heading for ''Utah—Ozone (8-Hour Standard)'' to read ''Utah—1997 8-Hour Ozone NAAQS (Primary and Secondary)''; by adding a new table entitled ''Utah—2008 8-Hour Ozone NAAQS (Primary and Secondary)'' following the newly designated table ''Utah—1997 8-Hour Ozone NAAQS (Primary and Secondary)'', effective July 20, 2012. For the convenience of the user, the added text is set forth as follows:

§ 81.345 Utah.

* * * * *

Utah—2008 8-Hour Ozone NAAQS (Primary and secondary)

Designated area	Designation		Classification	
	Date [1]	Type	Date [1]	Type
Uinta Basin, UT: [2]		Unclassifiable		
Duchesne County				
Uintah County				
Ute Indian Tribe of the Uintah & Ouray Reservation [3]				
Rest of State and Rest of Indian Country		Unclassifiable/Attainment		

[1] This date is July 20, 2012, unless otherwise noted.
[2] Excludes Indian country located in each area, unless otherwise noted.
[3] Includes Indian country of the tribe listed in this table located in the identified area. Information pertaining to areas of Indian country in this table is intended for CAA planning purposes only and is not an EPA determination of Indian country status or any Indian country boundary. EPA lacks the authority to establish Indian country land status, and is making no determination of Indian country boundaries, in this table.

* * * * *

§ 81.346 Vermont.

Vermont—TSP

Designated area	Does not meet primary standards	Does not meet secondary standards	Cannot be classified	Better than national standard
Champlain Valley Air Management Area: Essex Town (includes Essex Junction), Burlington City, South Burlington City, Winoski City			X	
Central Vermont Air Management area: Barre City			X	
Remainder of State				X

Vermont—SO_2

Designated area	Does not meet primary standards	Does not meet secondary standards	Cannot be classified	Better than national standards
AQCR 159 (Vermont portion)				X
AQCR 221 (Vermont portion)				X

Vermont—Carbon Monoxide

Designated Area	Designation		Classification	
	Date [1]	Type	Date [1]	Type
Statewide		Unclassifiable/Attainment		
Addison County				
Bennington County				
Caledonia County				
Chittenden County				
Essex County				
Franklin County				
Grand Isle County				
Lamoille County				
Orange County				
Orleans County				
Rutland County				
Washington County				
Windham County				
Windsor County				

[1] This date is November 15, 1990, unless otherwise noted.

Vermont—Ozone (1-Hour Standard)[2]

Designated area	Designation		Classification	
	Date [1]	Type	Date [1]	Type
AQCR 159 Champlain Calley Interstate (part)				
Addison County Unclassifiable		Unclassifiable/Attainment		
Chittenden County		Unclassifiable/Attainment		
AQCR 159 Champlain Calley Interstate (Remainder of).		Unclassifiable/Attainment		
Franklin County				
Grand Isle County				
Rutland County				
AQCR 221 Vermont Intrastate (part)		Unclassifiable/Attainment		
Windsor County				
AQCR 221 Vermont Intrastate (Remainder of)		Unclassifiable/Attainment		
Bennington County				
Caledonia County				
Essex County				
Lamoille County				
Orange County				
Orleans County				
Washington County				
Windham County				

[1] This date is October 18, 2000, unless otherwise noted.
[2] The 1-hour ozone standard is revoked effective June 15, 2005 for all areas in Vermont.

Vermont—NO_2 (1971 Annual Standard)

Designated area	Does not meet primary standards	Cannot be classified or better than national standards
AQCR 159 (Vermont portion)		X
AQCR 211 (Vermont portion)		X

Vermont—NO_2 (2010 1-Hour Standard)

Designated area	Designation [a]	
	Date [1]	Type
State of Vermont		Unclassifiable/Attainment.

[a] Includes Indian Country located in each county or area, except as otherwise specified.
[1] This date is 90 days after October 31, 2011, unless otherwise noted.

Vermont—PM10

Designation status	Designation		Classification	
	Date	Type	Date	Type
Whole State	11/15/90	Unclassifiable		

Vermont—Ozone (8-Hour Standard)

Designated area	Designation [a]		Category/classification	
	Date [1]	Type	Date [1]	Type
AQCR 159 Champlain Valley Interstate (part)				
Addison County		Unclassifiable/Attainment		
Chittenden County		Unclassifiable/Attainment		
AQCR 159 Champlain Calley Interstate (remainder of).		Unclassifiable/Attainment		
Franklin County				
Grand Isle County				
Rutland County				
AQCR 221 Vermont Intrastate (part)		Unclassifiable/Attainment		
Windsor County				
AQCR 221 Vermont Intrastate (remainder of)		Unclassifiable/Attainment		
Bennington County				
Caledonia County				
Essex County				
Lamoille County				
Orange County				
Orleans County				

Vermont—Ozone (8-Hour Standard)

Designated area	Designation [a]		Category/classification	
	Date [1]	Type	Date [1]	Type
Washington County				
Windham County				

[a] Includes Indian Country located in each county or area, except as otherwise specified.
[1] This date is June 15, 2004, unless otherwise noted.

Vermont—$PM_{2.5}$ (Annual NAAQS)

Designated area	Designation [a]	
	Date [1]	Type
Statewide:		
Addison County		Unclassifiable/Attainment.
Bennington County		Unclassifiable/Attainment.
Caledonia County		Unclassifiable/Attainment.
Chittenden County		Unclassifiable/Attainment.
Essex County		Unclassifiable/Attainment.
Franklin County		Unclassifiable/Attainment.
Grand Isle County		Unclassifiable/Attainment.
Lamoille County		Unclassifiable/Attainment.
Orange County		Unclassifiable/Attainment.
Orleans County		Unclassifiable/Attainment.
Rutland County		Unclassifiable/Attainment.
Washington County		Unclassifiable/Attainment.
Windham County		Unclassifiable/Attainment.
Windsor County		Unclassifiable/Attainment.

[a] Includes Indian Country located in each county or area, except as otherwise specified.
[1] This date is 90 days after January 5, 2005, unless otherwise noted.

Vermont—$PM_{2.5}$ [24-hour NAAQS]

Designated area	Designation for the 1997 NAAQS [a]		Designation for the 2006 NAAQS [a]	
	Date [1]	Type	Date [2]	Type
Statewide:				
Addison County		Unclassifiable Attainment.		Unclassifiable/Attainment.
Bennington County		Unclassifiable Attainment.		Unclassifiable/Attainment.
Caledonia County		Unclassifiable Attainment.		Unclassifiable/Attainment.
Chittenden County		Unclassifiable Attainment.		Unclassifiable/Attainment.
Essex County		Unclassifiable Attainment.		Unclassifiable/Attainment.
Franklin County		Unclassifiable Attainment.		Unclassifiable/Attainment.
Grand Isle County		Unclassifiable Attainment.		Unclassifiable/Attainment.
Lamoille County		Unclassifiable Attainment.		Unclassifiable/Attainment.
Orange County		Unclassifiable Attainment.		Unclassifiable/Attainment.
Orleans County		Unclassifiable Attainment.		Unclassifiable/Attainment.
Rutland County		Unclassifiable Attainment.		Unclassifiable/Attainment.
Washington County		Unclassifiable Attainment.		Unclassifiable/Attainment.
Windham County		Unclassifiable Attainment.		Unclassifiable/Attainment.
Windsor County		Unclassifiable Attainment.		Unclassifiable/Attainment.

[a] Includes Indian Country located in each county or area, except as otherwise specified.
[1] This date is 90 days after January 5, 2005, unless otherwise noted.
[2] This date is 30 days after November 13, 2009, unless otherwise noted.

Vermont—2008 Lead NAAQS

Designated area	Designation for the 2008 NAAQS [a]	
	Date [1]	Type
Whole State		Unclassifiable/Attainment.

[a] Includes Indian Country located in each county or area, except as otherwise specified.
[1] December 31, 2011 unless otherwise noted.

[43 FR 8964, Mar. 3, 1978, as amended at 45 FR 10782, Feb. 19, 1980; 46 FR 41784, Aug. 18, 1981; 47 FR 31878, July 23, 1982; 48 FR 2128, Jan. 18, 1983; 49 FR 33018, Aug. 20, 1984; 56 FR 56841, Nov. 6, 1991; 62 FR 41283, Aug. 1, 1997; 62 FR 41870, Aug. 4, 1997; 63 FR 31086, June 5, 1998; 65 FR 45264, July 20, 2000; 69 FR 23941, Apr. 30, 2004; 70 FR 1010, Jan. 5, 2005; 70 FR 44478, Aug. 3, 2005; 74 FR 58770, Nov. 13, 2009; 76 FR 72118, Nov. 22, 2011; 77 FR 9583, Feb. 17, 2012]

EFFECTIVE DATE NOTE: At 77 FR 30151, May 21, 2012, § 81.346 was amended by revising the table heading for ''Vermont—Ozone (8-Hour Standard)'' to read ''Vermont—1997 8-Hour Ozone NAAQS (Primary and Secondary)''; by adding a new table entitled ''Vermont—2008 8-Hour Ozone NAAQS (Primary and Secondary)'' following the newly designated table ''Vermont—1997 8-Hour Ozone NAAQS (Primary and Secondary)'', effective July 20, 2012. For the convenience of the user, the added text is set forth as follows:

§ 81.346 Vermont.

* * * * *

Vermont—2008 8-Hour Ozone NAAQS (Primary and secondary)

Designated area [1]	Designation		Classification	
	Date [2]	Type	Date [2]	Type
AQCR 159 Champlain Valley Interstate:		Unclassifiable/Attainment		
Addison County				
Chittenden County				
Franklin County				
Grand Isle County				
Rutland County				
AQCR 221 Vermont Intrastate:		Unclassifiable/Attainment		
Bennington County				
Caledonia County				
Essex County				
Lamoille County				
Orange County				
Orleans County				
Washington County				
Windham County				
Windsor County				

[1] Includes any Indian country in each county or area, unless otherwise specified.
[2] This date is July 20, 2012, unless otherwise noted.

* * * * *

§ 81.347 Virginia.

Virginia—TSP

Designated area	Does not meet primary standards	Does not meet secondary standards	Cannot be classified	Better than national standards
Eastern Tennessee-Southwest Virginia Interstate AQCR (Virginia Portion):				
Bland County				X
Buchanan County				X
Carroll County				X
Dickenson County				X
Grayson County				X
Lee County				X
Russell County				X
Scott County				X
Smyth County				X
Tazewell County				X

Virginia—TSP

Designated area	Does not meet primary standards	Does not meet secondary standards	Cannot be classified	Better than national standards
Washington County				X
Wise County				X
Wythe County				X
City of Bristol				X
City of Galax				X
City of Norton				X
Valley of Virginia Intrastate AQCR:				
Alleghany County				X
Augusta County				X
Bath County				X
Botetourt County				X
Clarke County				X
Craig County				X
Floyd County				X
Frederick County				X
Giles County				X
Highland County				X
Montgomery County				X
Page County				X
Pulaski County				X
Roanoke County				X
Rockbridge County				X
Rockingham County				X
Shenandoah County				X
Warren County				X
City of Buena Vista				X
City of Clifton Forge				X
City of Covington				X
City of Harrisonburg				X
City of Lexington				X
City of Radford				X
City of Roanoke				X
City of Salem				X
City of Staunton				X
City of Waynesboro				X
City of Winchester				X
Central Virginia Intrastate AQCR:				
Amelia County				X
Amherst County				X
Appomattox County				X
Bedford County				X
Brunswick County				X
Buckingham County				X
Campbell County				X
Charlotte County				X
Cumberland County				X
Franklin County				X
Halifax County				X
Henry County				X
Lunenburg County				X
Mecklenburg County				X
Nottoway County				X
Patrick County				X
Pittsylvania County				X
Prince Edward County				X
City of Bedford				X
City of Danville				X
City of Lynchburg				X
City of Martinsville				X
City of South Boston				X
Northeastern Virginia Intrastate AQCR:				
Accomack County				X
Albemarle County				X
Caroline County				X
Culpeper County				X
Essex County				X
Fauquier County				X
Fluvanna County				X
Gloucester County				X
Greene County				X

Virginia—TSP

Designated area	Does not meet primary standards	Does not meet secondary standards	Cannot be classified	Better than national standards
King and Queen County				X
King George County				X
King William County				X
Lancaster County				X
Louisa County				X
Madison County				X
Mathews County				X
Middlesex County				X
Nelson County				X
Northampton Co				X
Northumberland Co				X
Orange County				X
Rappahannock County				X
Richmond County				X
Spotsylvania County				X
Stafford County				X
Westmoreland County				X
City of Charlottesville				X
City of Fredericksburg				X
State Capital Intrastate AQCR:				
Charles City County				X
Chesterfield County				X
Dinwiddie County				X
Goochland County				X
Greensville County				X
Hanover County				X
Henrico County				X
New Kent County				X
Powhatan County				X
Prince George County				X
Surry County				X
Sussex County				X
City of Colonial Heights				X
City of Emporia				X
City of Hopewell				X
City of Petersburg				X
City of Richmond				X
Hampton Roads Intrastate AQCR:				
Isle of Wight County				X
James City County				X
Southampton County				X
York County				X
City of Chesapeake				X
City of Franklin				X
City of Hampton				X
City of Newport News				X
City of Norfolk				X
City of Poquoson				X
City of Portsmouth				X
City of Suffolk				X
City of Virginia Beach				X
City of Wiliamsburg				X
National Capital Interstate AQCR (Virginia Portion):				
Arlington County				X
Fairfax County				X
Loudoun County				X
Prince William County				X
City of Alexandria				X
City of Fairfax				X
City of Falls Church				X
City of Manassas				X
City of Manassas Park				X

Virginia—SO_2

Designated area	Does not meet primary standards	Does not meet secondary standards	Cannot be classified	Better than national standards
Eastern Tennessee Southwest Virginia Interstate AQCR (Virginia Portion):				
Bland County				X
Buchanan County				X
Carroll County				X
Dickenson County				X
Grayson County				X
Lee County				X
Russell County				X
Scott County				X
Smyth County				X
Tazewell County				X
Washington County				X
Wise County				X
Wythe County				X
City of Bristol				X
City of Galax				X
City of Norton				X
Valley of Virginia Intrastate AQCR:				
Alleghany County				X
Augusta County				X
Bath County				X
Botetourt County				X
Clarke County				X
Craig County				X
Floyd County				X
Frederick County				X
Giles County				X
Highland County				X
Montgomery County				X
Page County				X
Pulaski County				X
Roanoke County				X
Rockbridge County				X
Rockingham County				X
Shenandoah County				X
Warren County				X
City of Buena Vista				X
City of Clifton Forge				X
City of Covington				X
City of Harrisonburg				X
City of Lexington				X
City of Radford				X
City of Roanoke				X
City of Salem				X
City of Staunton				X
City of Waynesboro				X
City of Winchester				X
Central Virginia Intrastate AQCR:				
Amelia County				X
Amherst County				X
Appomattox County				X
Bedford County				X
Brunswick County				X
Buckingham County				X
Campbell County				X
Charlotte County				X
Cumberland County				X
Franklin County				X
Halifax County				X
Henry County				X
Lunenburg County				X
Mecklenburg County				X
Nottoway County				X
Patrick County				X
Pittsylvania County				X
Prince Edward County				X
City of Bedford				X
City of Danville				X
City of Lynchburg				X

Virginia—SO_2

Designated area	Does not meet primary standards	Does not meet secondary standards	Cannot be classified	Better than national standards
City of Martinsville				X
City of South Boston				X
Northeastern Virginia Intrastate AQCR:				
Accomack County				X
Albemarle County				X
Caroline County				X
Culpeper County				X
Essex County				X
Fauquier County				X
Fluvanna County				X
Gloucester County				X
Greene County				X
King and Queen County				X
King George County				X
King William County				X
Lancaster County				X
Louisa County				X
Madison County				X
Mathews County				X
Middlesex County				X
Nelson County				X
Northampton County				X
Northumberland County				X
Orange County				X
Rappahannock County				X
Richmond County				X
Spotsylvania County				X
Stafford County				X
Westmoreland County				X
City of Charlottesville				X
City of Fredericksburg				X
State Capital Intrastate AQCR:				
Charles City County				X
Chesterfield County				X
Dinwiddie County				X
Goochland County				X
Greensville County				X
Hanover County				X
Henrico County				X
New Kent County				X
Powhatan County				X
Prince George County				X
Surry County				X
Sussex County				X
City of Colonial Heights				X
City of Emporia				X
City of Hopewell				X
City of Petersburg				X
City of Richmond				X
Hampton Roads Intrastate AQCR:				
Isle of Wight County				X
James City County				X
Southampton County				X
York County				X
City of Chesapeake				X
City of Franklin				X
City of Hampton				X
City of Newport News				X
City of Norfolk				X
City of Poquoson				X
City of Portsmouth				X
City of Suffolk				X
City of Virginia Beach				X
City of Williamsburg				X
National Capital Interstate AQCR (Virginia Portion):				
Arlington County				X
Fairfax County				X
Loudoun County				X
Prince William County				X
City of Alexandria				X

Virginia—SO_2

Designated area	Does not meet primary standards	Does not meet secondary standards	Cannot be classified	Better than national standards
City of Fairfax	.....	.....	.....	X
City of Falls Church	.....	.....	.....	X
City of Manassas	.....	.....	.....	X
City of Manassas Park	.....	.....	.....	X

Virginia—Carbon Monoxide

Designated Area	Designation		Classification	
	Date [1]	Type	Date [1]	Type
Washington Area				
Alexandria	.....	Attainment		
Arlington County	.....	Attainment		
AQCR 047 National Capital Interstate	.....	Unclassifiable/Attainment		
Fairfax				
Fairfax County				
Falls Church				
Loudoun County				
Manassas				
Manassas Park				
Prince William County				
AQCR 207 Eastern Tennessee-SW Virginia Interstate.	.....	Unclassifiable/Attainment		
Bland County				
Bristol				
Buchanan County				
Carroll County				
Dickenson County				
Galax				
Grayson County				
Lee County				
Norton				
Russell County				
Scott County				
Smyth County				
Tazewell County				
Washington County				
Wise County				
Wythe County				
AQCR 222 Central Virginia Intrastate	.....	Unclassifiable/Attainment		
Amelia County				
Amherst County				
Appomattox County				
Bedford				
Bedford County				
Brunswick County				
Buckingham County				
Campbell County				
Charlotte County				
Cumberland County				
Danville				
Franklin County				
Halifax County				
Henry County				
Lunenburg County				
Lynchburg				
Martinsville				
Mecklenburg County				
Nottoway County				
Patrick County				
Pittsylvania County				
Prince Edward County				
South Boston				
AQCR 223 Hampton Roads	.....	Unclassifiable/Attainment		
Chesapeake				
Franklin				
Hampton				
Isle Of Wight County				
James City County				

Virginia—Carbon Monoxide

Designated Area	Designation		Classification	
	Date [1]	Type	Date [1]	Type
Newport News				
Norfolk				
Poquoson				
Portsmouth				
Southampton County				
Suffolk				
Virginia Beach				
Williamsburg				
York County				
AQCR 224 Northeastern Virginia Intrastate	.....	Unclassifiable/Attainment		
Accomack County				
Albemarle County				
Caroline County				
Charlottesville				
Culpeper County				
Essex County				
Fauquier County				
Fluvanna County				
Fredericksburg				
Gloucester County				
Greene County				
King And Queen County				
King George County				
King William County				
Lancaster County				
Louisa County				
Madison County				
Mathews County				
Middlesex County				
Nelson County				
Northampton County				
Northumberland County				
Orange County				
Rappahannock County				
Richmond County				
Spotsylvania County				
Stafford County				
Westmoreland County				
AQCR 225 State Capital Intrastate	.....	Unclassifiable/Attainment		
City of Richmond				
Charles City County				
Chesterfield County				
Colonial Heights				
Dinwiddie County				
Emporia				
Goochland County				
Greensville County				
Hanover County				
Henrico County				
Hopewell				
New Kent County				
Petersburg				
Powhatan County				
Prince George County				
Surry County				
Sussex County				
AQCR 226 Valley of Virginia Intrastate	.....	Unclassifiable/Attainment		
Alleghany County				
Augusta County				
Bath County				
Botetourt County				
Buena Vista				
Clarke County				
Clifton Forge				
Covington				
Craig County				
Floyd County				
Frederick County				
Giles County				
Harrisonburg				
Highland County				

Virginia—Carbon Monoxide

Designated Area	Designation		Classification	
	Date [1]	Type	Date [1]	Type
Lexington				
Montgomery County				
Page County				
Pulaski County				
Radford				
Roanoke				
Roanoke County				
Rockbridge County				
Rockingham County				
Salem				
Shenandoah County				
Staunton				
Warren County				
Waynesboro				
Winchester				

[1] This date is November 15, 1990, unless otherwise noted.

Virginia—Ozone (1-Hour Standard)[3]

Designated area	Designation		Classification	
	Date [1]	Type	Date [1]	Type
Norfolk-Virginia-Beach Newport News (Hampton Roads) Area.				
Chesapeake		Attainment		
Hampton		Attainment		
James City County		Attainment		
Newport News		Attainment		
Norfolk		Attainment		
Poquoson		Attainment		
Portsmouth		Attainment		
Suffolk		Attainment		
Virginia Beach		Attainment		
Williamsburg		Attainment		
York County		Attainment		
Richmond Area:				
Charles City County (part) Beginning at the intersection of State Route 156 and the Henrico/Charles City County Line, proceeding south along State Route 5/156 to the intersection with State Route 106/156, proceeding south along Route 106/156 to the intersection with the Prince George/Charles City County line, proceeding west along the Prince George/Charles City County line to the intersection with the Chesterfield/Charles City County line, proceeding north along the Chesterfield/Charles City County line to the intersection with the Henrico/Charles City County line, proceeding north along the Henrico/Charles City County line to State Route 156..		Attainment		
Chesterfield County		Attainment		
Colonial Heights		Attainment		
Hanover County		Attainment		
Henrico County		Attainment		
Hopewell		Attainment		
Richmond		Attainment		
Smyth County Area:				
Smyth County (part) The portion of White Top Mountain above the 4,500 foot elevation in Smyth County..	(2) Nonattainment	(2)	Rural transport (Marginal).	
Washington, DC Area:				
Alexandria		Nonattainment	3/25/03	Severe
Arlington County		Nonattainment	3/25/03	Severe

Virginia—Ozone (1-Hour Standard)[3]

Designated area	Designation		Classification	
	Date [1]	Type	Date [1]	Type
Fairfax		Nonattainment	3/25/03	Severe
Fairfax County		Nonattainment	3/25/03	Severe
Falls Church		Nonattainment	3/25/03	Severe
Loudoun County		Nonattainment	3/25/03	Severe
Manassas		Nonattainment	3/25/03	Severe
Manassas Park		Nonattainment	3/25/03	Severe
Prince William County		Nonattainment	3/25/03	Severe
Stafford County		Nonattainment	3/25/03	Severe
AQCR 207 Eastern Tennessee—SW Virginia Interstate (Remainder of).		Unclassifiable/Attainment		
Bland County				
Bristol				
Buchanan County				
Carroll County				
Dickenson County				
Galax				
Grayson County				
Lee County				
Norton				
Russell County				
Scott County				
Smyth County (part) Remainder of county				
Tazewell County				
Washington County				
Wise County				
Wythe County				
AQCR 222 Central Virginia Intrastate		Unclassifiable/Attainment		
Amelia County				
Amherst County				
Appomattox County				
Bedford				
Bedford County				
Brunswick County				
Buckingham County				
Campbell County				
Charlotte County				
Cumberland County				
Danville				
Franklin County				
Halifax County				
Henry County				
Lunenburg County				
Lynchburg				
Martinsville				
Mecklenburg County				
Nottoway County				
Patrick County				
Pittsylvania County				
Prince Edward County				
South Boston				
AQCR 223 Hampton Roads Intrastate (Remainder of)..		Unclassifiable/Attainment		
Franklin				
Isle Of Wight County				
Southampton County				
AQCR 224 NE Virginia Intrastate (Remainder of)..		Unclassifiable/Attainment		
Accomack County				
Albemarle County				
Caroline County				
Charlottesville				
Culpeper County				
Essex County				
Fauquier County				
Fluvanna County				
Fredericksburg				
Gloucester County				
Greene County				
King and Queen County				
King George County				

Virginia—Ozone (1-Hour Standard)[3]

Designated area	Designation		Classification	
	Date [1]	Type	Date [1]	Type
King William County				
Lancaster County				
Louisa County				
Madison County				
Mathews County				
Middlesex County				
Nelson County				
Northampton County				
Northumberland County				
Orange County				
Rappahannock County				
Richmond County				
Spotsylvania County				
Westmoreland County				
AQCR 225 State Capital Intrastate (Remainder of)				
Charles City County (part)		Unclassifiable/Attainment		
Remainder of County				
Dinwiddie County				
Emporia				
Goochland County				
Greensville County				
New Kent County				
Petersburg				
Powhatan County				
Prince George County				
Surry County				
Sussex County				
AQCR 226 Valley of Virginia Intrastate		Unclassifiable/Attainment		
Alleghany County				
Augusta County				
Bath County				
Botetourt County				
Buena Vista				
Clarke County				
Clifton Forge				
Covington County				
Craig County				
Floyd County				
Frederick County				
Giles County				
Harrisonburg				
Highland County				
Lexington				
Montgomery County				
Page County				
Pulaski County				
Radford				
Roanoke				
Roanoke County				
Rockbridge County				
Rockingham County				
Salem				
Shenandoah County				
Staunton				
Warren County				
Waynesboro				
Winchester				

[1] This date is October 18, 2000, unless otherwise noted.
[2] This date is January 16, 2001.
[3] The 1-hour ozone standard is revoked effective June 15, 2005 for all areas in Virginia except Northern Shenandoah Valley Region (Winchester City and Frederick County) and Roanoke area where it is revoked effective April 15, 2009.

Virginia—NO_2 (1971 Annual Standard)

Designated area	Does not meet primary standards	Cannot be classified or better than national standards
Virginia portion of Southwest Virginia—Eastern Tennessee Interstate AQCR		X
Valley of Virginia AQCR		X

Virginia—NO_2 (1971 Annual Standard)

Designated area	Does not meet primary standards	Cannot be classified or better than national standards
Central Virginia AQCR		X
Northeastern Virginia AQCR		X
State Capital AQCR		X
Hampton Roads AQCR		X
Virginia portion of National Capital Interstate AQCR		X

Virginia—NO_2 (2010 1-Hour Standard)

Designated area	Designation [a]	
	Date [1]	Type
State of Virginia		Unclassifiable/Attainment.

[a] Includes Indian Country located in each county or area, except as otherwise specified.
[1] This date is 90 days after October 31, 2011, unless otherwise noted.

Virginia—Ozone (8-Hour Standard)

Designated area	Designation [a]		Category/classification	
	Date [1]	Type	Date [1]	Type
Frederick Co., VA:				
Frederick County	(2)	Attainment		
Winchester City	(2)	Attainment		
Fredericksburg, VA:				
City of Fredericksburg	1/23/06	Attainment		
Spotsylvania County	1/23/06	Attainment		
Stafford County	1/23/06	Attainment		
Madison and Page Cos. (Shenandoah NP), VA area:				
Madison County (part)	2/2/06	Attainment		
Page County (part)	2/2/06	Attainment		
Norfolk-Virginia Beach-Newport News (Hampton Roads), VA Area:				
Chesapeake City	6/1/07	Attainment		
Gloucester County	6/1/07	Attainment		
Hampton City	6/1/07	Attainment		
Isle of Wight County	6/1/07	Attainment		
James City County	6/1/07	Attainment		
Newport News City	6/1/07	Attainment		
Norfolk City	6/1/07	Attainment		
Poquoson City	6/1/07	Attainment		
Portsmouth City	6/1/07	Attainment		
Suffolk City	6/1/07	Attainment		
Virginia Beach City	6/1/07	Attainment		
Williamsburg City	6/1/07	Attainment		
York County	6/1/07	Attainment		
Richmond-Petersburg, VA Area:				
Charles City County	6/18/07	Attainment		
Chesterfield County	6/18/07	Attainment		
Colonial Heights City	6/18/07	Attainment		
Hanover County	6/18/07	Attainment		
Henrico County	6/18/07	Attainment		
Hopewell City	6/18/07	Attainment		
Petersburg City	6/18/07	Attainment		
Prince George County	6/18/07	Attainment		
Richmond City	6/18/07	Attainment		
Roanoke, VA:				
Botetourt County	(2)	Attainment		
Roanoke City	(2)	Attainment		
Roanoke County	(2)	Attainment		
Salem City	(2)	Attainment		
Washington, DC-MD-VA:				
Alexandria City		Nonattainment		Subpart 2/Moderate.
Arlington County		Nonattainment		Subpart 2/Moderate.
Fairfax City		Nonattainment		Subpart 2/Moderate.
Fairfax County		Nonattainment		Subpart 2/Moderate.
Falls Church City		Nonattainment		Subpart 2/Moderate.
Loudoun County		Nonattainment		Subpart 2/Moderate.
Manassas City		Nonattainment		Subpart 2/Moderate.

Virginia—Ozone (8-Hour Standard)

Designated area	Designation [a]		Category/classification	
	Date [1]	Type	Date [1]	Type
Manassas Park City	.....	Nonattainment	.....	Subpart 2/Moderate.
Prince William County	.....	Unattainment	.....	Subpart 2/Moderate.
AQCR 207 Eastern Tennessee-SW Virginia Interstate (remainder of).	.....	Unclassifiable/Attainment		
Bland County				
Bristol City				
Buchanan County				
Carroll County				
Dickenson County				
Galax City				
Grayson County				
Lee County				
Norton City				
Russell County				
Scott County				
Smyth County				
Tazewell County				
Washington County				
Wise County				
Wythe County				
AQCR 222 Central Virginia Intrastate	.....	Unclassifiable/Attainment		
Amelia County				
Amherst County				
Appomattox County				
Bedford City				
Bedford County				
Brunswick County				
Buckingham County				
Campbell County				
Charlotte County				
Cumberland County				
Danville City				
Franklin County				
Halifax County				
Henry County				
Lunenburg County				
Lynchburg City				
Martinsville City				
Mecklenburg County				
Nottoway County				
Patrick County				
Pittsylvania County				
Prince Edward County				
AQCR 223 Hampton Roads Intrastate (remainder of).	.....	Unclassifiable/Attainment		
Franklin City				
Southampton County				
AQCR 224 NE Virginia Intrastate (remainder of).	.....	Unclassifiable/Attainment		
Accomack County				
Albemarle County				
Caroline County				
Charlottesville City				
Culpeper County				
Essex County				
Fauquier County				
Fluvanna County				
Greene County				
King and Queen County				
King George County				
King William County				
Lancaster County				
Louisa County				
Madison County (part) remainder				
Mathews County				
Middlesex County				
Nelson County				
Northampton County				
Northumberland County				
Orange County				
Rappahannock County				

Virginia—Ozone (8-Hour Standard)

Designated area	Designation [a]		Category/classification	
	Date [1]	Type	Date [1]	Type
Richmond County				
Westmoreland County				
AQCR 225 State Capital Intrastate (remainder of).	.....	Unclassifiable/Attainment		
Dinwiddie County				
Emporia City				
Goochland County				
Greensville County				
New Kent County				
Petersburg City				
Powhatan County				
Surry County				
Sussex County				
AQCR 226 Valley of Virginia Intrastate	.....	Unclassifiable/Attainment		
Alleghany County				
Augusta County				
Bath County				
Buena Vista City				
Clarke County				
Covington City				
Craig County				
Floyd County				
Giles County				
Harrisonburg City				
Highland County				
Lexington City				
Montgomery County				
Page County (part) remainder				
Pulaski County				
Radford City				
Rockbridge County				
Rockingham County				
Shenandoah County				
Staunton City				
Warren County				
Waynesboro City				

[a] Includes Indian Country located in each county or area, except as otherwise specified.
[1] This date is June 15, 2004, unless otherwise noted.
[2] Effective April 15, 2008.
[3] November 22, 2004.

Virginia—$PM_{2.5}$ (Annual NAAQS)

Designated area	Designation [a]	
	Date[1]	Type
Washington, DC-MD-VA:		
Arlington County	.....	Nonattainment.
Fairfax County	.....	Nonattainment.
Loudoun County	.....	Nonattainment.
Prince William County	.....	Nonattainment.
Alexandria City	.....	Nonattainment.
Fairfax City	.....	Nonattainment.
Falls Church City	.....	Nonattainment.
Manassas City	.....	Nonattainment.
Manassas Park City	.....	Nonattainment.
AQCR 207 Eastern Tennessee-SW Virginia Interstate (remainder of):		
Bland County	.....	Unclassifiable/Attainment.
Buchanan County	.....	Unclassifiable/Attainment.
Carroll County	.....	Unclassifiable/Attainment.
Dickenson County	.....	Unclassifiable/Attainment.
Grayson County	.....	Unclassifiable/Attainment.
Lee County	.....	Unclassifiable/Attainment.
Russell County	.....	Unclassifiable/Attainment.
Scott County	.....	Unclassifiable/Attainment.
Smyth County	.....	Unclassifiable/Attainment.
Tazewell County	.....	Unclassifiable/Attainment.
Washington County	.....	Unclassifiable/Attainment.
Wise County	.....	Unclassifiable/Attainment.
Wythe County	.....	Unclassifiable/Attainment.
Bristol City	.....	Unclassifiable/Attainment.

Virginia—$PM_{2.5}$ (Annual NAAQS)

Designated area	Designation [a]	
	Date[1]	Type
Galax City		Unclassifiable/Attainment.
Norton City		Unclassifiable/Attainment.
AQCR 222 Central Virginia Intrastate:		
Amelia County		Unclassifiable/Attainment.
Amherst County		Unclassifiable/Attainment.
Appomattox County		Unclassifiable/Attainment.
Bedford County		Unclassifiable/Attainment.
Brunswick County		Unclassifiable/Attainment.
Buckingham County		Unclassifiable/Attainment.
Campbell County		Unclassifiable/Attainment.
Charlotte County		Unclassifiable/Attainment.
Cumberland County		Unclassifiable/Attainment.
Franklin County		Unclassifiable/Attainment.
Halifax County		Unclassifiable/Attainment.
Henry County		Unclassifiable/Attainment.
Lunenburg County		Unclassifiable/Attainment.
Mecklenburg County		Unclassifiable/Attainment.
Nottoway County		Unclassifiable/Attainment.
Patrick County		Unclassifiable/Attainment.
Pittsylvania County		Unclassifiable/Attainment.
Prince Edward County		Unclassifiable/Attainment.
Bedford City		Unclassifiable/Attainment.
Danville City		Unclassifiable/Attainment.
Lynchburg City		Unclassifiable/Attainment.
Martinsville City		Unclassifiable/Attainment.
AQCR 223 Hampton Roads Intrastate (remainder of):		
Southampton County		Unclassifiable/Attainment.
Franklin City		Unclassifiable/Attainment.
AQCR 224 NE Virginia Intrastate (remainder of):		
Accomack County		Unclassifiable/Attainment.
Albemarle County		Unclassifiable/Attainment.
Caroline County		Unclassifiable/Attainment.
Culpeper County		Unclassifiable/Attainment.
Essex County		Unclassifiable/Attainment.
Fauquier County		Unclassifiable/Attainment.
Fluvanna County		Unclassifiable/Attainment.
Greene County		Unclassifiable/Attainment.
King and Queen County		Unclassifiable/Attainment.
King George County		Unclassifiable/Attainment.
King William County		Unclassifiable/Attainment.
Lancaster County		Unclassifiable/Attainment.
Louisa County		Unclassifiable/Attainment.
Madison County		Unclassifiable/Attainment.
Mathews County		Unclassifiable/Attainment.
Middlesex County		Unclassifiable/Attainment.
Nelson County		Unclassifiable/Attainment.
Northampton County		Unclassifiable/Attainment.
Northumberland County		Unclassifiable/Attainment.
Orange County		Unclassifiable/Attainment.
Rappahannock County		Unclassifiable/Attainment.
Richmond County		Unclassifiable/Attainment.
Westmoreland County		Unclassifiable/Attainment.
Charlottesville City		Unclassifiable/Attainment.
AQCR 225 State Capital Intrastate (remainder of):		
Dinwiddie County		Unclassifiable/Attainment.
Goochland County		Unclassifiable/Attainment.
Greensville County		Unclassifiable/Attainment.
New Kent County		Unclassifiable/Attainment.
Powhatan County		Unclassifiable/Attainment.
Surry County		Unclassifiable/Attainment.
Sussex County		Unclassifiable/Attainment.
Emporia City		Unclassifiable/Attainment.
Petersburg City		Unclassifiable/Attainment.
AQCR 226 Valley of Virginia Intrastate:		
Alleghany County		Unclassifiable/Attainment.
Augusta County		Unclassifiable/Attainment.
Bath County		Unclassifiable/Attainment.
Clarke County		Unclassifiable/Attainment.
Craig County		Unclassifiable/Attainment.
Floyd County		Unclassifiable/Attainment.
Giles County		Unclassifiable/Attainment.

Virginia—$PM_{2.5}$ (Annual NAAQS)

Designated area	Designation [a]	
	Date [1]	Type
Highland County		Unclassifiable/Attainment.
Montgomery County		Unclassifiable/Attainment.
Page County		Unclassifiable/Attainment.
Pulaski County		Unclassifiable/Attainment.
Rockbridge County		Unclassifiable/Attainment.
Rockingham County		Unclassifiable/Attainment.
Shenandoah County		Unclassifiable/Attainment.
Warren County		Unclassifiable/Attainment.
Buena Vista City		Unclassifiable/Attainment.
Covington City		Unclassifiable/Attainment.
Harrisonburg City		Unclassifiable/Attainment.
Lexington City		Unclassifiable/Attainment.
Radford City		Unclassifiable/Attainment.
Staunton City		Unclassifiable/Attainment.
Waynesboro City		Unclassifiable/Attainment.
Frederick Co., VA:		
Frederick County		Unclassifiable/Attainment.
Winchester City		Unclassifiable/Attainment.
Fredericksburg, VA:		
Spotsylvania County		Unclassifiable/Attainment.
Stafford County		Unclassifiable/Attainment.
City of Fredericksburg		Unclassifiable/Attainment.
Norfolk-Virginia-Beach Newport News (Hampton Roads), VA:		
Gloucester County		Unclassifiable/Attainment.
Isle of Wight County		Unclassifiable/Attainment.
James City County		Unclassifiable/Attainment.
York County		Unclassifiable/Attainment.
Chesapeake City		Unclassifiable/Attainment.
Hampton City		Unclassifiable/Attainment.
Newport News City		Unclassifiable/Attainment.
Norfolk City		Unclassifiable/Attainment.
Poquoson City		Unclassifiable/Attainment.
Portsmouth City		Unclassifiable/Attainment.
Suffolk City		Unclassifiable/Attainment.
Virginia Beach City		Unclassifiable/Attainment.
Williamsburg City		Unclassifiable/Attainment.
Richmond-Petersburg, VA:		
Charles City County		Unclassifiable/Attainment.
Chesterfield County		Unclassifiable/Attainment.
Hanover County		Unclassifiable/Attainment.
Henrico County		Unclassifiable/Attainment.
Prince George County		Unclassifiable/Attainment.
Colonial Heights City		Unclassifiable/Attainment.
Hopewell City		Unclassifiable/Attainment.
Richmond City		Unclassifiable/Attainment.
Roanoke, VA:		
Botetourt County		Unclassifiable/Attainment.
Roanoke County		Unclassifiable/Attainment.
Roanoke City		Unclassifiable/Attainment.
Salem City		Unclassifiable/Attainment.

[a] Includes Indian Country located in each county or area, except as otherwise specified.
[1] This date is 90 days after January 5, 2005, unless otherwise noted.

Virginia—$PM_{2.5}$ [24-hour NAAQS]

Designated area	Designation for the 1997 NAAQS [a]		Designation for the 2006 NAAQS [a]	
	Date [1]	Type	Date [2]	Type
AQCR 047 National Capital Interstate (DC-MD-VA) (part):				
Arlington County		Unclassifiable/Attainment		Unclassifiable/Attainment.
Fairfax County		Unclassifiable/Attainment		Unclassifiable/Attainment.
Loudoun County		Unclassifiable/Attainment		Unclassifiable/Attainment.
Prince William County		Unclassifiable/Attainment		Unclassifiable/Attainment.
Alexandria City		Unclassifiable/Attainment		Unclassifiable/Attainment.

Virginia—$PM_{2.5}$ [24-hour NAAQS]

Designated area	Designation for the 1997 NAAQS [a]		Designation for the 2006 NAAQS [a]	
	Date [1]	Type	Date [2]	Type
Fairfax City		Unclassifiable/Attainment		Unclassifiable/Attainment.
Falls Church City		Unclassifiable/Attainment		Unclassifiable/Attainment.
Manassas City		Unclassifiable/Attainment		Unclassifiable/Attainment.
Manassas Park City		Unclassifiable/Attainment		Unclassifiable/Attainment.
AQCR 207 Eastern Tennessee-SW Virginia Interstate (remainder of):				
Bland County		Unclassifiable/Attainment		Unclassifiable/Attainment.
Buchanan County		Unclassifiable/Attainment		Unclassifiable/Attainment.
Carroll County		Unclassifiable/Attainment		Unclassifiable/Attainment.
Dickenson County		Unclassifiable/Attainment		Unclassifiable/Attainment.
Grayson County		Unclassifiable/Attainment		Unclassifiable/Attainment.
Lee County		Unclassifiable/Attainment		Unclassifiable/Attainment.
Russell County		Unclassifiable/Attainment		Unclassifiable/Attainment.
Scott County		Unclassifiable/Attainment		Unclassifiable/Attainment.
Smyth County		Unclassifiable/Attainment		Unclassifiable/Attainment.
Tazewell County		Unclassifiable/Attainment		Unclassifiable/Attainment.
Washington County		Unclassifiable/Attainment		Unclassifiable/Attainment.
Wise County		Unclassifiable/Attainment		Unclassifiable/Attainment.
Wythe County		Unclassifiable/Attainment		Unclassifiable/Attainment.
Bristol City		Unclassifiable/Attainment		Unclassifiable/Attainment.
Galax City		Unclassifiable/Attainment		Unclassifiable/Attainment.
Norton City		Unclassifiable/Attainment		Unclassifiable/Attainment.
AQCR 222 Central Virginia Intrastate:				
Amelia County		Unclassifiable/Attainment		Unclassifiable/Attainment.
Amherst County		Unclassifiable/Attainment		Unclassifiable/Attainment.
Appomattox County		Unclassifiable/Attainment		Unclassifiable/Attainment.
Bedford County		Unclassifiable/Attainment		Unclassifiable/Attainment.
Brunswick County		Unclassifiable/Attainment		Unclassifiable/Attainment.
Buckingham County		Unclassifiable/Attainment		Unclassifiable/Attainment.
Campbell County		Unclassifiable/Attainment		Unclassifiable/Attainment.
Charlotte County		Unclassifiable/Attainment		Unclassifiable/Attainment.
Cumberland County		Unclassifiable/Attainment		Unclassifiable/Attainment.
Franklin County		Unclassifiable/Attainment		Unclassifiable/Attainment.
Halifax County		Unclassifiable/Attainment		Unclassifiable/Attainment.
Henry County		Unclassifiable/Attainment		Unclassifiable/Attainment.
Lunenburg County		Unclassifiable/Attainment		Unclassifiable/Attainment.
Mecklenburg County		Unclassifiable/Attainment		Unclassifiable/Attainment.

Virginia—$PM_{2.5}$ [24-hour NAAQS]

Designated area	Designation for the 1997 NAAQS [a]		Designation for the 2006 NAAQS [a]	
	Date [1]	Type	Date [2]	Type
Nottoway County		Unclassifiable/Attainment		Unclassifiable/Attainment.
Patrick County		Unclassifiable/Attainment		Unclassifiable/Attainment.
Pittsylvania County		Unclassifiable/Attainment		Unclassifiable/Attainment.
Prince Edward County		Unclassifiable/Attainment		Unclassifiable/Attainment.
Bedford City		Unclassifiable/Attainment		Unclassifiable/Attainment.
Danville City		Unclassifiable/Attainment		Unclassifiable/Attainment.
Lynchburg City		Unclassifiable/Attainment		Unclassifiable/Attainment.
Martinsville City		Unclassifiable/Attainment		Unclassifiable/Attainment.
AQCR 223 Hampton Roads Intrastate (remainder of):				
Southampton County		Unclassifiable/Attainment		Unclassifiable/Attainment.
Franklin City		Unclassifiable/Attainment		Unclassifiable/Attainment.
AQCR 224 NE Virginia Intrastate (remainder of):				
Accomack County		Unclassifiable/Attainment		Unclassifiable/Attainment.
Albemarle County		Unclassifiable/Attainment		Unclassifiable/Attainment.
Caroline County		Unclassifiable/Attainment		Unclassifiable/Attainment.
Culpeper County		Unclassifiable/Attainment		Unclassifiable/Attainment.
Essex County		Unclassifiable/Attainment		Unclassifiable/Attainment.
Fauquier County		Unclassifiable/Attainment		Unclassifiable/Attainment.
Fluvanna County		Unclassifiable/Attainment		Unclassifiable/Attainment.
Greene County		Unclassifiable/Attainment		Unclassifiable/Attainment.
King and Queen County		Unclassifiable/Attainment		Unclassifiable/Attainment.
King George County		Unclassifiable/Attainment		Unclassifiable/Attainment.
King William County		Unclassifiable/Attainment		Unclassifiable/Attainment.
Lancaster County		Unclassifiable/Attainment		Unclassifiable/Attainment.
Louisa County		Unclassifiable/Attainment		Unclassifiable/Attainment.
Madison County		Unclassifiable/Attainment		Unclassifiable/Attainment.
Mathews County		Unclassifiable/Attainment		Unclassifiable/Attainment.
Middlesex County		Unclassifiable/Attainment		Unclassifiable/Attainment.
Nelson County		Unclassifiable/Attainment		Unclassifiable/Attainment.
Northampton County		Unclassifiable/Attainment		Unclassifiable/Attainment.
Northumberland County		Unclassifiable/Attainment		Unclassifiable/Attainment.
Orange County		Unclassifiable/Attainment		Unclassifiable/Attainment.
Rappahannock County		Unclassifiable/Attainment		Unclassifiable/Attainment.
Richmond County		Unclassifiable/Attainment		Unclassifiable/Attainment.
Westmoreland County		Unclassifiable/Attainment		Unclassifiable/Attainment.

Virginia—$PM_{2.5}$ [24-hour NAAQS]

Designated area	Designation for the 1997 NAAQS [a]		Designation for the 2006 NAAQS [a]	
	Date [1]	Type	Date [2]	Type
Charlottesville City		Unclassifiable/Attainment		Unclassifiable/Attainment.
AQCR 225 State Capital Intrastate (remainder of):				
Dinwiddie County		Unclassifiable/Attainment		Unclassifiable/Attainment.
Goochland County		Unclassifiable/Attainment		Unclassifiable/Attainment.
Greensville County		Unclassifiable/Attainment		Unclassifiable/Attainment.
New Kent County		Unclassifiable/Attainment		Unclassifiable/Attainment.
Powhatan County		Unclassifiable/Attainment		Unclassifiable/Attainment.
Surry County		Unclassifiable/Attainment		Unclassifiable/Attainment.
Sussex County		Unclassifiable/Attainment		Unclassifiable/Attainment.
Emporia City		Unclassifiable/Attainment		Unclassifiable/Attainment.
Petersburg City		Unclassifiable/Attainment		Unclassifiable/Attainment.
AQCR 226 Valley of Virginia Intrastate:				
Alleghany County		Unclassifiable/Attainment		Unclassifiable/Attainment.
Augusta County		Unclassifiable/Attainment		Unclassifiable/Attainment.
Bath County		Unclassifiable/Attainment		Unclassifiable/Attainment.
Clarke County		Unclassifiable/Attainment		Unclassifiable/Attainment.
Craig County		Unclassifiable/Attainment		Unclassifiable/Attainment.
Floyd County		Unclassifiable/Attainment		Unclassifiable/Attainment.
Giles County		Unclassifiable/Attainment		Unclassifiable/Attainment.
Highland County		Unclassifiable/Attainment		Unclassifiable/Attainment.
Montgomery County		Unclassifiable/Attainment		Unclassifiable/Attainment.
Page County		Unclassifiable/Attainment		Unclassifiable/Attainment.
Pulaski County		Unclassifiable/Attainment		Unclassifiable/Attainment.
Rockbridge County		Unclassifiable/Attainment		Unclassifiable/Attainment.
Rockingham County		Unclassifiable/Attainment		Unclassifiable/Attainment.
Shenandoah County		Unclassifiable/Attainment		Unclassifiable/Attainment.
Warren County		Unclassifiable/Attainment		Unclassifiable/Attainment.
Buena Vista City		Unclassifiable/Attainment		Unclassifiable/Attainment.
Covington City		Unclassifiable/Attainment		Unclassifiable/Attainment.
Harrisonburg City		Unclassifiable/Attainment		Unclassifiable/Attainment.
Lexington City		Unclassifiable/Attainment		Unclassifiable/Attainment.
Radford City		Unclassifiable/Attainment		Unclassifiable/Attainment.
Staunton City		Unclassifiable/Attainment		Unclassifiable/Attainment.
Waynesboro City		Unclassifiable/Attainment		Unclassifiable/Attainment.
Frederick Co., VA:				
Frederick County		Unclassifiable/Attainment		Unclassifiable/Attainment.

Virginia—$PM_{2.5}$ [24-hour NAAQS]

Designated area	Designation for the 1997 NAAQS [a]		Designation for the 2006 NAAQS [a]	
	Date [1]	Type	Date [2]	Type
Winchester City		Unclassifiable/Attainment		Unclassifiable/Attainment.
Fredericksburg, VA:				
Spotsylvania County		Unclassifiable/Attainment		Unclassifiable/Attainment.
Stafford County		Unclassifiable/Attainment		Unclassifiable/Attainment.
City of Fredericksburg		Unclassifiable/Attainment		Unclassifiable/Attainment.
Norfolk-Virginia-Beach Newport News (Hampton Roads), VA:				
Gloucester County		Unclassifiable/Attainment		Unclassifiable/Attainment.
Isle of Wight County		Unclassifiable/Attainment		Unclassifiable/Attainment.
James City County		Unclassifiable/Attainment		Unclassifiable/Attainment.
York County		Unclassifiable/Attainment		Unclassifiable/Attainment.
Chesapeake City		Unclassifiable/Attainment		Unclassifiable/Attainment.
Hampton City		Unclassifiable/Attainment		Unclassifiable/Attainment.
Newport News City		Unclassifiable/Attainment		Unclassifiable/Attainment.
Norfolk City		Unclassifiable/Attainment		Unclassifiable/Attainment.
Poquoson City		Unclassifiable/Attainment		Unclassifiable/Attainment.
Portsmouth City		Unclassifiable/Attainment		Unclassifiable/Attainment.
Suffolk City		Unclassifiable/Attainment		Unclassifiable/Attainment.
Virginia Beach City		Unclassifiable/Attainment		Unclassifiable/Attainment.
Williamsburg City		Unclassifiable/Attainment		Unclassifiable/Attainment.
Richmond-Petersburg, VA:				
Charles City County		Unclassifiable/Attainment		Unclassifiable/Attainment.
Chesterfield County		Unclassifiable/Attainment		Unclassifiable/Attainment.
Hanover County		Unclassifiable/Attainment		Unclassifiable/Attainment.
Henrico County		Unclassifiable/Attainment		Unclassifiable/Attainment.
Prince George County		Unclassifiable/Attainment		Unclassifiable/Attainment.
Colonial Heights City		Unclassifiable/Attainment		Unclassifiable/Attainment.
Hopewell City		Unclassifiable/Attainment		Unclassifiable/Attainment.
Richmond City		Unclassifiable/Attainment		Unclassifiable/Attainment.
Roanoke, VA:				
Botetourt County		Unclassifiable/Attainment		Unclassifiable/Attainment.
Roanoke County		Unclassifiable/Attainment		Unclassifiable/Attainment.
Roanoke City.		Unclassifiable/Attainment		Unclassifiable/Attainment.
Salem City		Unclassifiable/Attainment		Unclassifiable/Attainment.

[a] Includes Indian Country located in each county or area, except as otherwise specified.
[1] This date is 90 days after January 5, 2005, unless otherwise noted.
[2] This date is 30 days after November 13, 2009, unless otherwise noted.

Virginia—2008 Lead NAAQS

Designated area	Designation for the 2008 NAAQS [a]	
	Date [1]	Type
Whole State		Unclassifiable/Attainment.

[a] Includes Indian Country located in each county or area, except as otherwise specified.
[1] December 31, 2011 unless otherwise noted.

[43 FR 40518, Sept. 12, 1978]

EDITORIAL NOTE: For FEDERAL REGISTER citations affecting § 81.347 see the List of CFR Sections Affected, which appears in the Finding Aids section of the printed volume and at *www.fdsys.gov*.

EFFECTIVE DATE NOTE: At 77 FR 30152, May 21, 2012, § 81.347 was amended by revising the table heading for ''Virginia—Ozone (8-Hour Standard)'' to read ''Virginia—1997 8-Hour Ozone NAAQS (Primary and Secondary)''; by adding a new table entitled ''Virginia—2008 8-Hour Ozone NAAQS (Primary and Secondary)'' following the newly designated table ''Virginia—1997 8-Hour Ozone NAAQS (Primary and Secondary)'', effective July 20, 2012. For the convenience of the user, the added text is set forth as follows:

§ 81.347 Virginia.

* * * * *

Virginia—2008 8-Hour Ozone NAAQS(Primary and secondary)

Designated area [1]	Designation		Classification	
	Date [2]	Type	Date [2]	Type
Washington, DC-MD-VA: [2]		Nonattainment		Marginal.
Arlington County				
Fairfax County				
Loudoun County				
Prince William County				
Alexandria City				
Fairfax City				
Falls Church City				
Manassas City				
Manassas Park City				
AQCR 207 Eastern Tennessee—SW Virginia Interstate: [3].		Unclassifiable/Attainment		
Bland County				
Buchanan County				
Carroll County				
Dickenson County				
Grayson County				
Lee County				
Russell County				
Scott County				
Smyth County				
Tazewell County				
Washington County				
Wise County				
Wythe County				
Bristol City				
Galax City				
Norton City				
AQCR 222 Central Virginia Intrastate: [3]		Unclassifiable/Attainment		
Amelia County				
Amherst County				
Appomattox County				
Bedford County				
Brunswick County				
Buckingham County				
Campbell County				
Charlotte County				
Cumberland County				
Franklin County				
Halifax County				
Henry County				
Lunenburg County				
Mecklenburg County				

Virginia—2008 8-Hour Ozone NAAQS(Primary and secondary)

Designated area [1]	Designation		Classification	
	Date [2]	Type	Date [2]	Type
Nottoway County				
Patrick County				
Pittsylvania County				
Prince Edward County				
Bedford City				
Danville City				
Lynchburg City				
Martinsville City				
South Boston City				
AQCR 223 Hampton Roads Intrastate: [3]	.....	Unclassifiable/Attainment		
Isle of Wight County				
James City County				
Southampton County				
York County				
Chesapeake City				
Franklin City				
Hampton City				
Newport News City				
Norfolk City				
Poquoson City				
Portsmouth City				
Suffolk City				
Virginia Beach City				
Williamsburg City				
AQCR 224 NE Virginia Intrastate: [3]	.....	Unclassifiable/Attainment		
Accomack County				
Albemarle County				
Caroline County				
Culpeper County				
Essex County				
Fauquier County				
Fluvanna County				
Gloucester County				
Greene County				
King and Queen County				
King George County				
King William County				
Lancaster County				
Louisa County				
Madison County				
Mathews County				
Middlesex County				
Nelson County				
Northampton County				
Northumberland County				
Orange County				
Rappahannock County				
Richmond County				
Spotsylvania County				
Stafford County				
Westmoreland County				
Charlottesville City				
City of Fredericksburg				
AQCR 225 State Capital Intrastate: [3]	.....	Unclassifiable/Attainment		
Charles City County				
Chesterfield County				
Dinwiddie County				
Goochland County				
Greensville County				
Hanover County				
Henrico County				
New Kent County				
Powhatan County				
Prince George County				
Surry County				
Sussex County				
Colonial Heights City				
Emporia City				
Hopewell City				
Petersburg City				
Richmond City				

Virginia—2008 8-Hour Ozone NAAQS(Primary and secondary)

Designated area [1]	Designation		Classification	
	Date [2]	Type	Date [2]	Type
AQCR 226 Valley of Virginia Intrastate: [3]	.....	Unclassifiable/Attainment		
Alleghany County				
Augusta County				
Bath County				
Botetourt County				
Clarke County				
Craig County				
Floyd County				
Frederick County				
Giles County				
Highland County				
Montgomery County				
Page County				
Pulaski County				
Roanoke County				
Rockbridge County				
Rockingham County				
Shenandoah County				
Warren County				
Buena Vista City				
Clifton Forge City				
Covington City				
Harrisonburg City				
Lexington City				
Radford City				
Roanoke City				
Salem City				
Staunton City				
Waynesboro City				
Winchester City				

[1] This date is July 20, 2012, unless otherwise noted.
[2] Excludes Indian country located in each area, unless otherwise noted.
[3] Includes any Indian country in each county or area, unless otherwise specified.

* * * * *

§ 81.348 Washington.

Washington—TSP

Designated area	Does not meet primary standards	Does not meet secondary standards	Cannot be classified	Better than national standards
Eastern Washington-Northern Idaho Interstate AQCR 62 (Washington Portion):				
Spokane	X			
Clarkston	.....	X		
Remainder of AQCR 62 (Washington Portion)	.....	.....	.....	X
Portland Interstate AQCR 193 (Washington Portion):				
Longview—industrial area	.....	X		
Vancouver—small portions of the industrial port area	X			
Remainder of AQCR 193 (Washington Portion)	.....	.....	.....	X
Northern Washington Intrastate AQCR 227	.....	.....	.....	X
Olympic-Northwest Washington Intrastate AQCR 228:				
Port Angeles—small area of the CBD	.....	.....	.....	X
Remainder of AQCR 228	.....	.....	.....	X
Puget Sound Intrastate AQCR 229 Seattle—that area including the north portion of the Duwamish industrial area, and extending to the southern boundary of the CBD	X			
Seattle—an area of the Duwamish extending approximately 2½ miles further south than the above area	.....	X		
Renton	.....	X		
Kent	.....	X		
Tacoma—that area, including the Tide Flats industrial area, east end of the CBD and the north end of the South Tacoma Way corridor	X			

Washington—TSP

Designated area	Does not meet primary standards	Does not meet secondary standards	Cannot be classified	Better than national standards
Remainder of AQCR 229	.....	.....	.....	X
South Central Washington Intrastate AQCR 230	.....	.....	.....	X

Washington—SO_2

Designated area	Does not meet primary standards	Does not meet secondary standards	Cannot be classified	Better than national standards
Eastern Washington-Northern Idaho Interstate AQCR 62 (Washington Portion)	.....	.....	.....	X
Portland Interstate AQCR 193 (Washington Portion)	.....	.....	.....	X
Northern Washington Intrastate AQCR 227	.....	.....	.....	X
Olympic-Northwest Washington Intrastate AQCR 228	.....	.....	.....	X
Puget Sound Intrastate AQCR 229:				
Tacoma-a parabolic shaped area extending approximately 3½ miles SSW from the ASARCO copper smelter	.....	.....	.....	X
Remainder of AQCR 229	.....	.....	.....	X
South Central Washington Intrastate AQCR 230	.....	.....	.....	X

Washington-Carbon Monoxide

Designated Area	Designation		Classification	
	Date [1]	Type	Date [1]	Type
Seattle-Tacoma Area:				
Seattle-Tacoma Urban Area (as defined by the Washington Department of Transportation urban area maps).				
King County (part)	.....	Attainment		
Pierce County (part)	.....	Attainment		
Snohomish County (part)	.....	Attainment		
Spokane Area				
Spokane County (part).				
Spokane urban area (as defined by the Washington Department of Transportation urban area maps)	8/29/05	Attainment		
Vancouver Area:				
Clark County (part) Air Quality Maintenance Area.		Attainment		
Yakima Area:.				
Yakima County (part)	12/31/2002	Attainment		
Portion of the Central Business District Street intersections: S. 16th Ave. & W Mead Ave, S. 16th Ave & Hathaway Ave., E "I" St. & N 1st St., N 1st St & E "G" St., E "G" St & N 8th St., N 8th St. & Pitcher St., Pitcher St. & I–82 Interchange, Nob Hill Blvd & I–82 Interchange, Rudkin Rd & I–82 Interchange, S 1st St. & Old Town Rd., Old Town Rd & Main St., W Washington & S 1st St., E Mead Ave & S 1st St., S 16th Ave & W Mead Ave.				
AQCR 062 E. Washington-N. Idaho Interstate (Remainder of).	.....	Unclassifiable/Attainment		
Adams County				
Asotin County				
Columbia County				
Garfield County				
Grant County				
Lincoln County				
Spokane County (part)				
area outside Spokane urban area				
Whitman County				

Washington-Carbon Monoxide

Designated Area	Designation		Classification	
	Date [1]	Type	Date [1]	Type
AQCR 193 Portland Interstate (Remainder of)	.....	Unclassifiable/Attainment		
Clark County (part)				
area outside of Vancouver AQMA				
Cowlitz County				
Lewis County				
Skamania County				
Wahkiakum County				
AQCR 227 Northern Washington Intrastate	.....	Unclassifiable/Attainment		
Chelan County				
Douglas County				
Ferry County				
Okanogan County				
Pend Oreille County				
Stevens County				
AQCR 228 Olympia-Northwest Washington Intrastate.	.....	Unclassifiable/Attainment		
Clallam County				
Grays Harbor County				
Island County				
Jefferson County				
Mason County				
Pacific County				
San Juan County				
Skagit County				
Thurston County				
Whatcom County				
AQCR 229 Puget Sound Intrastate (Remainder of)	.....	Unclassifiable/Attainment		
King County (part)				
area outside the Seattle-Tacoma Urban Area				
Kitsap County				
Pierce County (part)				
area outside the Seattle-Tacoma Urban Area				
Snohomish County (part)				
area outside the Seattle-Tacoma Urban Area				
AQCR 230 S. Central Washington Intrastate (Remainder of).	.....	Unclassifiable/Attainment		
Benton County				
Franklin County				
Kittitas County				
Klickitat County				
Walla Walla County				
Yakima County (part)				
portion outside the Central Business District				

[1] This date is November 15, 1990, unless otherwise noted.

Washington—Ozone (1-Hour Standard)[2]

Designated area	Designation		Classification	
	Date [1]	Type	Date [1]	Type
Portland-Vancouver AQMA Area:				
Clark County (part) Air Quality Maintenance Area.	.....	Attainment		

Washington—Ozone (1-Hour Standard)[2]

Designated area	Designation		Classification	
	Date [1]	Type	Date [1]	Type
Seattle-Tacoma Area:				
The following boundary includes all of Pierce County, and all of King County except a small portion on the north-east corner and the western portion of Snohomish County: Starting at the mouth of the Nisqually river extend northwesterly along the Pierce County line to the southernmost point of the west county line of King County; thence northerly along the county line to the southernmost point of the west county line of Snohomish County; thence northerly along the county line to the intersection with SR 532; thence easterly along the north line of SR 532 to the intersection of I–5, continuing east along the same road now identified as Henning Rd., to the intersection with SR 9 at Bryant; thence continuing easterly on Bryant East Rd. and Rock Creek Rd., also identified as Grandview Rd., approximately 3 miles to the point at which it is crossed by the existing BPA electrical transmission line; thence southeasterly along the BPA transmission line approximately 8 miles to point of the crossing of the south fork of the Stillaguamish River; thence continuing in a southeasterly direction in a meander line following the bed of the River to Jordan Road; southerly along Jordan Road to the north city limits of Granite Falls; thence following the north and east city limits to 92nd St. N.E. and Menzel Lake Rd.; thence south-southeasterly along the Menzel Lake Rd. and the Lake Roesiger Rd. a distance of approximately 6 miles to the northernmost point of Lake Roesiger; thence southerly along a meander line following the middle of the Lake and Roesiger Creek to Woods Creek; thence southerly along a meander line following the bed of the Creek approximately 6 miles to the point the Creek is crossed by the existing BPA electrical transmission line; thence easterly along the BPA transmission line approximately 0.2 miles; thence southerly along the BPA Chief Joseph-Covington electrical transmission line approximately 3 miles to the north line of SR 2; thence southeasterly along SR 2 to the intersection with the east county line of King County; thence south along the county line to the northernmost point of the east county line of Pierce County; thence along the county line to the point of beginning at the mouth of the Nisqually River.	.....	Attainment		
AQCR 062 E Washington-N Idaho Interstate (part) ..	.....	Attainment		
Spokane County	.....	Unclassifiable/Attainment		
AQCR 062 E Washington-N Idaho Interstate (Remainder of).	.....	Unclassifiable/Attainment		
Adams County				
Asotin County				
Columbia County				
Garfield County				
Grant County				
Lincoln County				
Whitman County				

Washington—Ozone (1-Hour Standard)[2]

Designated area	Designation		Classification	
	Date [1]	Type	Date [1]	Type
AQCR 193 Portland Interstate (Remainder of)	.....	Unclassifiable/Attainment		
Clark County (part) Remainder of county				
Cowlitz County				
Lewis County				
Skamania County				
Wahkiakum County				
AQCR 227 Northern Washington Intrastate	.....	Unclassifiable/Attainment		
Chelan County				
Douglas County				
Ferry County				
Okanogan County				
Pend Oreille County				
Stevens County				
AQCR 228 Olympic-Northwest Washington Intrastate.	.....	Unclassifiable/Attainment		
Clallam County				
Grays Harbor County				
Island County				
Jefferson County				
Mason County				
Pacific County				
San Juan County				
Skagit County				
Thurston County				
Whatcom County				
AQCR 229 Puget Sound Intrastate (Remainder of)	.....	Unclassifiable/Attainment		
King County (Part) Remainder of County				
Kitsap County				
Snohomish County (Part) Remainder of County				
AQCR 230 South Central Washington Intrastate	.....	Unclassifiable/Attainment		
Benton County				
Franklin County				
Kittitas County				
Klickitat County				
Walla Walla County				
Yakima County				

[1] This date is October 18, 2000, unless otherwise noted.
[2] The 1-hour ozone standard is revoked effective June 15, 2005 for all areas in Washington. The Portland-Vancouver AQMA and Seattle-Tacoma areas are maintenance areas for the 1-hour NAAQS for purposes of 40 CFR part 51 subpart X.

Washington—PM–10

Designated Area	Designation		Classification	
	Date	Type	Date	Type
King County:.				
The portion of the City of Seattle bounded on the east by I–5/East Duwamish Greenbelt, on the south by 104th street, on the west by the West Duwamish Greenbelt north to Fairmont Avenue, S.W., north on Fairmont Avenue to Elliot Bay, and Dearborn Street to I–5.	5/14/01	Attainment		
The City of Kent and a portion of the Green River valley bounded on the east and west by the 100 foot contour, on the north by South 212th Street, and on the south by Highway 516.	5/14/01	Attainment		
Pierce County:.				
Tacoma metropolitan area bounded on the north by Marine View Drive from Commencement Bay east to the 100 foot contour, southeast along the 100 foot contour to 64th Avenue east, south along 64th Avenue east as extended to I–5, I–5 west to the 100 foot contour near Pacific Avenue, and north along the 100 foot contour to Commencement Bay.	5/14/01	Attainment		
Spokane County:.				

Washington—PM–10

Designated Area	Designation		Classification	
	Date	Type	Date	Type
The area bounded on the south by a line from Universal Transmercator (UTM) coordinate 489000mE, 5271000mN west to 458000mE, 5271000mN, thence north along a line to coordinate 458000mE, 5288000mN, thence east to 463000mE, 5288000mN, thence north to 463000mE, 5292000mN, thence east to 481000mE, 5292000mN, thence south to 481000mE, 5288000mN, thence east to 489000mE, 5288000mN, thence south to the beginning coordinate, 489000mE, 5271000mN.	8/30/05	Attainment		
Yakima County				
The area bounded on the south by a line from UTM coordinate 694000mW, 5157000mN, west to 681000mW, 5157000mN, thence north along a line to coordinate 681000mN, 5172000mN, thence east to 694000mW, 5172000mN, thence south to the beginning coordinate 694000mW, 5157000mN, excluding the area within the exterior boundary of the Yakama Indian Reservation.	3/10/05	Attainment		
Thurston County				
Cities of Olympia, Tumwater, and Lacey	12/04/00	Attainment		
Walla Walla and Benton Counties				
Wallula:.				
The area bounded on the south by a line from UTM coordinate 5099975mN, 362500mE, west to 5099975mN, 342500mE, thence north along a line to coordinate 5118600mN, 342500mE, thence east to 5118600mN, 362500mE, thence south to the beginning coordinate 5099975mN, 362500mE.	9/26/05	Attainment.		
Rest of State	11/15/90	Unclassifiable		

Washington—NO_2 (1971 Annual Standard)

Designated area	Does not meet primary standards	Cannot be classified or better than national standards
Eastern Washington-Northern Idaho, Interstate AQCR 62 (Washington Portion)		X
Portland Interstate AQCR 193 (Washington Portion)		X
Northern Washington Intrastate AQCR 227		X
Olympic-Northwest Washington, Intrastate AQCR 228		X
Puget Sound Intrastate AQCR 229		X
South Central Washington Intrastate AQCR 230		X

Washington—NO_2 (2010 1-Hour Standard)

Designated area	Designation [a]	
	Date [1]	Type
State of Washington		Unclassifiable/Attainment.

[a] Includes Indian Country located in each county or area, except as otherwise specified.
[1] This date is 90 days after October 31, 2011, unless otherwise noted.

Washington—Ozone (8-Hour Standard)

Designated area	Designation [a]		Category/classification	
	Date [1]	Type	Date [1]	Type
Portland-Vancouver AQMA Area:				
Clark County (part)		Unclassifiable/Attainment		
Air Quality Maintenance Area				
Seattle-Tacoma Area:		Unclassifiable/Attainment		

Washington—Ozone (8-Hour Standard)

Designated area	Designation [a]		Category/classification	
	Date [1]	Type	Date [1]	Type
The following boundary includes all of Pierce County, and all of King County except a small portion on the north-east corner and the western portion of Snohomish County: Starting at the mouth of the Nisqually river extend northwesterly along the Pierce County line to the southernmost point of the west county line of King County; thence northerly along the county line to the southernmost point of the west county line of Snohomish County; thence northerly along the county line to the intersection with SR 532; thence easterly along the north line of SR 532 to the intersection of I–5, continuing east along the same road now identified as Henning Rd., to the intersection with SR 9 at Bryant; thence continuing easterly on Bryant East Rd. and Rock Creek Rd., also identified as Grandview Rd., approximately 3 miles to the point at which it is crossed by the existing BPA electrical transmission line; thence southeasterly along the BPA transmission line approximately 8 miles to point of the crossing of the south fork of the Stillaguamish River; thence continuing in a southeasterly direction in a meander line following the bed of the River to Jordan Road; southerly along Jordan Road to the north city limits of Granite Falls; thence following the north and east city limits to 92nd St. NE., and Menzel Lake Rd.; thence south-southeasterly along the Menzel Lake Rd., and the Lake Roesiger Rd., a distance of approximately 6 miles to the northernmost point of Lake Roesiger; thence southerly along a meander line following the middle of the Lake and Roesiger Creek to Woods Creek; thence southerly along a meander line following the bed of the Creek approximately 6 miles to the point the Creek is crossed by the existing BPA electrical transmission line; thence easterly along the BPA transmission line approximately 0.2 miles; thence southerly along the BPA Chief Joseph-Covington electrical transmission line approximately 3 miles to the north line of SR 2; thence southeasterly along SR 2 to the intersection with the east county line of King County; thence south along the county line to the northernmost point of the east county line of Pierce County; thence along the county line to the point of beginning at the mouth of the Nisqually River.				
AQCR 062 E Washington-N Idaho Interstate (part)	.....	Unclassifiable/Attainment		
Spokane County	.....	Unclassifiable/Attainment		
AQCR 062 E Washington-N Idaho Interstate (remainder of).	.....	Unclassifiable/Attainment		
Adams County				
Asotin County				
Columbia County				
Garfield County				
Grant County				
Lincoln County				
Whitman County				
AQCR 193 Portland Interstate (remainder of)	.....	Unclassifiable/Attainment		

Washington—Ozone (8-Hour Standard)

Designated area	Designation [a]		Category/classification	
	Date [1]	Type	Date [1]	Type
Clark County (part) remainder				
Cowlitz County				
Lewis County				
Skamania County				
Wahkiakum County				
AQCR 227 Northern Washington Intrastate	.....	Unclassifiable/Attainment		
Chelan County				
Douglas County				
Ferry County				
Okanogan County				
Pend Oreille County				
Stevens County				
AQCR 228 Olympic-Northwest Washington Intrastate.	.....	Unclassifiable/Attainment		
Clallam County				
Grays Harbor County				
Island County				
Jefferson County				
Mason County				
Pacific County				
San Juan County				
Skagit County				
Thurston County				
Whatcom County				
AQCR 229 Puget Sound Intrastate (remainder of)	.....	Unclassifiable/Attainment		
King County (part) remainder				
Kitsap County				
Snohomish County (part) remainder				
AQCR 230 South Central Washington Intrastate	.....	Unclassifiable/Attainment		
Benton County				
Franklin County				
Kittitas County				
Klickitat County				
Walla Walla County				
Yakima County				

[a] Includes Indian Country located in each county or area, except as otherwise specified.
[1] This date is June 15, 2004, unless otherwise noted.

Washington—$PM_{2.5}$ (Annual NAAQS)

Designated area	Designation [a]	
	Date [1]	Type
Portland—Vancouver AQMA:		
Clark County (part)	.....	Unclassifiable/Attainment.
Air quality maintenance area		
Seattle—Tacoma Area	.....	Unclassifiable/Attainment.

Washington—$PM_{2.5}$ (Annual NAAQS)

Designated area	Designation [a]	
	Date [1]	Type
The following boundary includes all of Pierce County, and all of King County except a small portion on the north-east corner and the western portion of Snohomish County: Starting at the mouth of the Nisqually river extend northwesterly along the Pierce County line to the southernmost point of the west county line of King County; thence northerly along the county line to the southernmost point of the west county line of Snohomish County; thence northerly along the county line to the intersection with SR 532; thence easterly along the north line of SR 532 to the intersection of I–5, continuing east along the same road now identified as Henning Rd., to the intersection with SR 9 at Bryant; thence continuing easterly on Bryant East Rd. and Rock Creek Rd., also identified as Grandview Rd., approximately 3 miles to the point at which it is crossed by the existing BPA electrical transmission line; thence southeasterly along the BPA transmission line approximately 8 miles to point of the crossing of the south fork of the Stillaguamish River; thence continuing in a southeasterly direction in a meander line following the bed of the River to Jordan Road; southerly along Jordan Road to the north city limits of Granite Falls; thence following the north and east city limits to 92nd St. N.E. and Menzel Lake Rd.; thence south-southeasterly along the Menzel Lake Rd. and the Lake Roesiger Rd. a distance of approximately 6 miles to the northernmost point of Lake Roesiger; thence southerly along a meander line following the middle of the Lake and Roesiger Creek to Woods Creek; thence southerly along a meander line following the bed of the Creek approximately 6 miles to the point the Creek is crossed by the existing BPA electrical transmission line; thence easterly along the BPA transmission line approximately 0.2 miles; thence southerly along the BPA Chief Joseph-Covington electrical transmission line approximately 3 miles to the north line of SR 2; thence southeasterly along SR 2 to the intersection with the east county line of King County; thence south along the county line to the northernmost point of the east county line of Pierce County; thence along the county line to the point of beginning at the mouth of the Nisqually River.		
AQCR 062 E Washington-N Idaho Interstate (part):		
Spokane County	.....	Unclassifiable/Attainment.
AQCR 062 E Washington-N Idaho Interstate (remainder of):		
Adams County	.....	Unclassifiable/Attainment.
Asotin County	.....	Unclassifiable/Attainment.
Columbia County	.....	Unclassifiable/Attainment.
Garfield County	.....	Unclassifiable/Attainment.
Grant County	.....	Unclassifiable/Attainment.
Lincoln County	.....	Unclassifiable/Attainment.
Whitman County	.....	Unclassifiable/Attainment.
AQCR 193 Portland Interstate (remainder of):		
Clark County (remainder)	.....	Unclassifiable/Attainment.
Cowlitz County	.....	Unclassifiable/Attainment.
Lewis County	.....	Unclassifiable/Attainment.
Skamania County	.....	Unclassifiable/Attainment.
Wahkiakum County	.....	Unclassifiable/Attainment.
AQCR 227 Northern Washington Intrastate:		
Chelan County	.....	Unclassifiable/Attainment.
Douglas County	.....	Unclassifiable/Attainment.
Ferry County	.....	Unclassifiable/Attainment.
Okanogan County	.....	Unclassifiable/Attainment.
Pend Oreille County	.....	Unclassifiable/Attainment.
Stevens County	.....	Unclassifiable/Attainment.
AQCR 228 Olympic-Northwest Washington Intrastate:		
Clallam County	.....	Unclassifiable/Attainment.
Grays Harbor County	.....	Unclassifiable/Attainment.
Island County	.....	Unclassifiable/Attainment.
Jefferson County	.....	Unclassifiable/Attainment.
Mason County	.....	Unclassifiable/Attainment.
Pacific County	.....	Unclassifiable/Attainment.
San Juan County	.....	Unclassifiable/Attainment.
Skagit County	.....	Unclassifiable/Attainment.
Thurston County	.....	Unclassifiable/Attainment.

Washington—$PM_{2.5}$ (Annual NAAQS)

Designated area	Designation [a]	
	Date [1]	Type
Whatcom County	.....	Unclassifiable/Attainment.
AQCR 229 Puget Sound Intrastate (remainder of):		
King County (remainder)	.....	Unclassifiable/Attainment.
Kitsap County	.....	Unclassifiable/Attainment.
Snohomish County (remainder)	.....	Unclassifiable/Attainment.
AQCR 230 South Central Washington Intrastate:		
Benton County	.....	Unclassifiable/Attainment.
Franklin County	.....	Unclassifiable/Attainment.
Kittitas County	.....	Unclassifiable/Attainment.
Klickitat County	.....	Unclassifiable/Attainment.
Walla Walla County	.....	Unclassifiable/Attainment.
Yakima County	.....	Unclassifiable/Attainment.
Seattle-Tacoma Area:		
Pierce County	.....	Unclassifiable/Attainment.

[a] Includes Indian Country located in each county or area, except as otherwise specified.
[1] This date is 90 days after January 5, 2005, unless otherwise noted.

Washington—$PM_{2.5}$ [24-hour NAAQS]

Designated area	Designation for the 1997 NAAQS [a]		Designation for the 2006 NAAQS [a]	
	Date [1]	Type	Date [2]	Type
Tacoma, WA:				
Pierce County (part)	.....	Unclassifiable/Attainment	.....	Nonattainment.

Washington—$PM_{2.5}$ [24-hour NAAQS]

Designated area	Designation for the 1997 NAAQS [a]		Designation for the 2006 NAAQS [a]	
	Date [1]	Type	Date [2]	Type
Starting from where an extension of Kennedy Road Northeast would intersect Commencement Bay, proceed north to the intersection of Marine View Drive (State Route 509) and Kennedy Road Northeast. Proceed south on Marine View Drive to Hylebos Creek. Proceed south along Hylebos Creek to 12th Street East. Proceed east on 12th Street East to 70th Avenue East. Proceed south on 70th Avenue East to State Route 99 (S.R. 99). Proceed north on S.R. 99 0.1 mile north of Birch Street to a driveway to the east. Proceed east along the driveway and continue east along the same alignment to the Pierce County Line/Comprehensive Urban Growth Area (CUGA) boundary. Proceed east along the Pierce County Line/CUGA boundary to the eastern boundary of Edgewood. Proceed south along the eastern boundary of Edgewood to eastern boundary of the Sumner Urban Service Area. Proceed south along eastern boundary of the Sumner Urban Service Area to the eastern boundary of the Puyallup Urban Service Area. Proceed south along the eastern boundary of the Puyallup Urban Service Area to the eastern boundary of Puyallup/CUGA boundary. Proceed south and then west along the CUGA boundary to the eastern boundary of McChord Air Force Base. Proceed north along the eastern boundary of McChord Air Force Base to the northernmost point on the eastern boundary. Proceed from the northernmost point on the eastern boundary of McChord Air Force Base to the south right-of-way of S.R. 512. Proceed west along the south right-of-way of S.R. 512 to the south right-of-way of I–5. Proceed south along the south right-of-way to I–5 to the point opposite the boundary between Lakewood and Camp Murray. Proceed north across I–5 to the boundary between Lakewood and Camp Murray. Proceed north along the western boundary of Lakewood to the point where the western boundary coincides with the CUGA boundary. Proceed north along the CUGA boundary to the southern boundary of Point Defiance Park. Proceed east along the southern boundary of Point Defiance Park to Commencement Bay/CUGA boundary. Proceed southeast, then northeast, and finally northwest along the CUGA boundary to the starting point.				

Washington—$PM_{2.5}$ [24-hour NAAQS]

Designated area	Designation for the 1997 NAAQS [a]		Designation for the 2006 NAAQS [a]	
	Date [1]	Type	Date [2]	Type
Rest of State:				
Adams County		Unclassifiable/Attainment		Unclassifiable/Attainment.
Asotin County		Unclassifiable/Attainment		Unclassifiable/Attainment.
Benton County		Unclassifiable/Attainment		Unclassifiable/Attainment.
Clark County		Unclassifiable/Attainment		Unclassifiable/Attainment.
Clallam County		Unclassifiable/Attainment		Unclassifiable/Attainment.
Columbia County		Unclassifiable/Attainment		Unclassifiable/Attainment.
Cowlitz County		Unclassifiable/Attainment		Unclassifiable/Attainment.
Douglas County		Unclassifiable/Attainment		Unclassifiable/Attainment.
Ferry County		Unclassifiable/Attainment		Unclassifiable/Attainment.
Franklin County		Unclassifiable/Attainment		Unclassifiable/Attainment.
Garfield County		Unclassifiable/Attainment		Unclassifiable/Attainment.
Grant County		Unclassifiable/Attainment		Unclassifiable/Attainment.
Grays Harbor County		Unclassifiable/Attainment		Unclassifiable/Attainment.
Island County		Unclassifiable/Attainment		Unclassifiable/Attainment.
Jefferson County		Unclassifiable/Attainment		Unclassifiable/Attainment.
King County		Unclassifiable/Attainment		Unclassifiable/Attainment.
Kitsap County		Unclassifiable/Attainment		Unclassifiable/Attainment.
Kittitas County		Unclassifiable/Attainment		Unclassifiable/Attainment.
Klickitat County		Unclassifiable/Attainment		Unclassifiable/Attainment.
Lincoln County		Unclassifiable/Attainment		Unclassifiable/Attainment.
Mason County		Unclassifiable/Attainment		Unclassifiable/Attainment.
Okanogan County		Unclassifiable/Attainment		Unclassifiable/Attainment.
Pacific County		Unclassifiable/Attainment		Unclassifiable/Attainment.
Pend Oreille County		Unclassifiable/Attainment		Unclassifiable/Attainment.
Pierce County (remainder)		Unclassifiable/Attainment		Unclassifiable/Attainment.
San Juan County		Unclassifiable/Attainment		Unclassifiable/Attainment.
Skagit County		Unclassifiable/Attainment		Unclassifiable/Attainment.
Skamania County		Unclassifiable/Attainment		Unclassifiable/Attainment.
Snohomish County		Unclassifiable/Attainment		Unclassifiable/Attainment.
Spokane County		Unclassifiable/Attainment		Unclassifiable/Attainment.
Stevens County		Unclassifiable/Attainment		Unclassifiable/Attainment.
Thurston County		Unclassifiable/Attainment		Unclassifiable/Attainment.
Wahkiakum County		Unclassifiable/Attainment		Unclassifiable/Attainment.
Walla Walla County		Unclassifiable/Attainment		Unclassifiable/Attainment.

Washington—$PM_{2.5}$ [24-hour NAAQS]

Designated area	Designation for the 1997 NAAQS [a]		Designation for the 2006 NAAQS [a]	
	Date [1]	Type	Date [2]	Type
Whatcom County		Unclassifiable/Attainment		Unclassifiable/Attainment.
Whitman County		Unclassifiable/Attainment		Unclassifiable/Attainment.
Yakima County		Unclassifiable/Attainment		Unclassifiable/Attainment.

[a] Includes Indian Country located in each county or area, except as otherwise specified.
[1] This date is 90 days after January 5, 2005, unless otherwise noted.
[2] This date is 30 days after November 13, 2009, unless otherwise noted.

Washington—2008 Lead NAAQS

Designated area	Designation for the 2008 NAAQS [a]	
	Date [1]	Type
Whole State		Unclassifiable/Attainment.

[a] Includes Indian Country located in each county or area, except as otherwise specified.
[1] December 31, 2011 unless otherwise noted.

[54 FR 27346, June 29, 1989]

EDITORIAL NOTE: For FEDERAL REGISTER citations affecting § 81.348 see the List of CFR Sections Affected, which appears in the Finding Aids section of the printed volume and at *www.fdsys.gov*.

EFFECTIVE DATE NOTE: At 77 FR 30154, May 21, 2012, § 81.348 was amended by revising the table heading for ''Washington—Ozone (8-Hour Standard)'' to read ''Washington—1997 8-Hour Ozone NAAQS (Primary and Secondary)''; by adding a new table entitled ''Washington—2008 8-Hour Ozone NAAQS (Primary and Secondary)'' following the newly designated table ''Washington—1997 8-Hour Ozone NAAQS (Primary and Secondary)'', effective July 20, 2012. For the convenience of the user, the added text is set forth as follows:

§ 81.348 Washington.

* * * * *

Washington—2008 8-Hour Ozone NAAQS (Primary and secondary)

Designated area	Designation [1]		Classification	
	Date [2]	Type	Date [1]	Type
Clark County		Unclassifiable/Attainment		
King County		Unclassifiable/Attainment		
Pierce County		Unclassifiable/Attainment		
Spokane County		Unclassifiable/Attainment		
Thurston County		Unclassifiable/Attainment		
Rest of state and rest of Indian country		Unclassifiable/Attainment		

[1] Includes any Indian country in each county or area, unless otherwise specified.
[2] This date is July 20, 2012, unless otherwise noted.

* * * * *

§ 81.349 West Virginia.

West Virginia—TSP

Designated area	Does not meet primary standards	Does not meet secondary standards	Cannot be classified	Better than national standards
Steubenville-Weirton-Wheeling Interstate AQCR	X			
1. Marshall County				X
2. Remainder of AQCR	X			
Parkersburg-Tygart magisterial district in Wood County		X		
Kanawha County and Valley magisterial district in Fayette County		X		

West Virginia—TSP

Designated area	Does not meet primary standards	Does not meet secondary standards	Cannot be classified	Better than national standards
In Marion County, all portions of Union and Winfield magisterial districts west of Interstate Highway I–79				X
Arden magisterial district in Berkeley County			X	
Remainder of State				X

West Virginia—SO_2

Designated area	Does not meet primary standards	Does not meet secondary standards	Cannot be classified	Better than national standards
Hancock County (part):				
The city of Weirton, including Butler and Clay magisterial districts				X
New Manchester-Grant magisterial district in Hancock County				X
Piedmont magisterial district in Mineral County			X	
Remainder of State				X

West Virginia—Carbon Monoxide

Designated Area	Designation		Classification	
	Date [1]	Type	Date [1]	Type
Statewide		Unclassifiable/Attainment		
Barbour County				
Berkeley County				
Boone County				
Braxton County				
Brooke County [2]				
Cabell County				
Calhoun County				
Clay County				
Doddridge County				
Fayette County				
Gilmer County				
Grant County				
Greenbrier County				
Hampshire County				
Hancock County [2]				
Hardy County				
Harrison County				
Jackson County				
Jefferson County				
Kanawha County				
Lewis County				
Lincoln County				
Logan County				
Marion County				
Marshall County				
Mason County				
McDowell County				
Mercer County				
Mineral County				
Mingo County				
Monongalia County				
Monroe County				
Morgan County				
Nicholas County				
Ohio County				
Pendleton County				
Pleasants County				
Pocahontas County				
Preston County				
Putnam County				
Raleigh County				
Randolph County				
Ritchie County				
Roane County				
Summers County				

West Virginia—Carbon Monoxide

Designated Area	Designation		Classification	
	Date [1]	Type	Date [1]	Type
Taylor County				
Tucker County				
Tyler County				
Upshur County				
Wayne County				
Webster County				
Wetzel County				
Wirt County				
Wood County				
Wyoming County				

[1] This date is November 15, 1990, unless otherwise noted.

[2] The listed designation does not reflect EPA action under section 107(d)(4)(A). At the date of enactment of the Clean Air Act Amendments, Jefferson County, Ohio; Brooke County, West Virginia; and Hancock County, West Virginia, were designated Unclassifiable/Attainment by operation of law under section 107(d)(1)(C) of the Clean Air Act. However, these States and EPA are reviewing whether to confirm or reverse that designation under the process set out under section 107(d)(4)(A) and will publish a separate notice to that effect.

West Virginia—Ozone (1-Hour Standard)[2]

Designated area	Designation		Classification	
	Date [1]	Type	Date [1]	Type
Charleston Area:.				
Kanawha County	.....	Unclassifiable/Attainment		
Putnam County	.....	Unclassifiable/Attainment		
Greenbrier Area:				
Greenbrier County	.....	Unclassifiable/Attainment		
Huntington-Ashland Area:				
Cabell County	.....	Unclassifiable/Attainment		
Wayne County	.....	Unclassifiable/Attainment		
Parkersburg-Marietta Area:				
Wood County	.....	Unclassifiable/Attainment		
Rest of State	.....	Unclassifiable/Attainment		
Barbour County				
Berkeley County				
Boone County				
Braxton County				
Brooke County				
Calhoun County				
Clay County				
Doddridge County				
Fayette County				
Gilmer County				
Grant County				
Hampshire County				
Hancock County				
Hardy County				
Harrison County				
Jackson County				
Jefferson County				
Lewis County				
Lincoln County				
Logan County				
Marion County				
Marshall County				
Mason County				
McDowell County				
Mercer County				
Mineral County				
Mingo County				
Monongalia County				
Monroe County				
Morgan County				
Nicholas County				
Ohio County				
Pendleton County				
Pleasants County				
Pocahontas County				
Preston County				
Raleigh County				
Randolph County				

West Virginia—Ozone (1-Hour Standard)[2]

Designated area	Designation		Classification	
	Date [1]	Type	Date [1]	Type
Ritchie County				
Roane County				
Summers County				
Taylor County				
Tucker County				
Tyler County				
Upshur County				
Webster County				
Wetzel County				
Wirt County				
Wyoming County				

[1] This date is October 18, 2000, unless otherwise noted.
[2] The 1-hour ozone standard is revoked effective June 15, 2005 for all areas in West Virginia except the Eastern Pan Handle Region (Berkeley and Jefferson Counties) where it is revoked effective April 15, 2009.

West Virginia—PM–10

Designated Area	Designation		Classification	
	Date	Type	Date	Type
Brooke.				
Follansbee area bounded on the north by the Market Street Bridge, on the east by West Virginia Route 2, on the south by the extension of the southern boundary of Steubenville Township in Jefferson County, Ohio, and on the west by the Ohio/West Virginia border	10/27/03	Attainment		
Hancock and Brooke Counties (part):				
The city of Weirton	9/12/06	Attainment		
Rest of State	11/15/90	Unclassifiable		

West Virginia—NO_2 (1971 Annual Standard)

Designated area	Does not meet primary standards	Cannot be classified or better than national standards
State of West Virginia		X

West Virginia—NO_2 (2010 1-Hour Standard)

Designated area	Designation [a]	
	Date [1]	Type
State of West Virginia		Unclassifiable/Attainment.

[a] Includes Indian Country located in each county or area, except as otherwise specified.
[1] This date is 90 days after October 31, 2011, unless otherwise noted.

West Virginia—Ozone (8-Hour Standard)

Designated area	Designation [a]		Category/classification	
	Date [1]	Type	Date [1]	Type
Berkeley & Jefferson Cos. WV:				
Berkeley County	([2])	Attainment.		
Jefferson County	([2])	Attainment.		
Charleston, WV:				
Kanawha County	August 10, 2006	Attainment		
Putnam County	August 10, 2006	Attainment		
Huntington-Ashland, WV-KY				
Cabell County	October 16, 2006	Attainment		
Wayne County	October 16, 2006	Attainment		
Parksburg-Marietta, WV-OH Area:				
Wood County	June 7, 2007	Attainment		

West Virginia—Ozone (8-Hour Standard)

Designated area	Designation [a]		Category/classification	
	Date [1]	Type	Date [1]	Type
Wheeling, WV-OH area:				
Marshall County	June 14, 2007	Attainment		
Ohio County	June 14, 2007	Attainment		
Steubenville-Weirton, OH-WV area:				
Brooke County	June 13, 2007	Attainment		
Hancock County	June 13, 2007	Attainment		
Rest of State	.....	Unclassifiable/Attainment		
Barbour County				
Boone County				
Braxton County				
Calhoun County				
Clay County				
Doddridge County				
Fayette County				
Gilmer County				
Grant County				
Greenbrier County				
Hampshire County				
Hardy County				
Harrison County				
Jackson County				
Lewis County				
Lincoln County				
Logan County				
Marion County				
Mason County				
McDowell County				
Mercer County				
Mineral County				
Mingo County				
Monongalia County				
Monroe County				
Morgan County				
Nicholas County				
Pendleton County				
Pleasants County				
Pocahontas County				
Preston County				
Raleigh County				
Randolph County				
Ritchie County				
Roane County				
Summers County				
Taylor County				
Tucker County				
Tyler County				
Upshur County				
Webster County				
Wetzel County				
Wirt County				
Wyoming County				

[a] Includes Indian Country located in each county or area, except as otherwise specified.
[1] This date is June 15, 2004, unless otherwise noted.
[2] Effective April 15, 2008.

West Virginia—$PM_{2.5}$ (Annual NAAQS)

Designated area	Designation [a]	
	Date [1]	Type
Charleston, WV:		
Kanawha County	.....	Nonattainment.
Putnam County	.....	Nonattainment.
Huntington-Ashland, WV-KY-OH:		
Cabell County	.....	Nonattainment.
Mason County (part)	.....	Nonattainment.

West Virginia—$PM_{2.5}$ (Annual NAAQS)

Designated area	Designation [a]	
	Date [1]	Type
Graham Tax District		
Wayne County		Nonattainment.
Marion County, WV (aka Fairmont CBSA):		
Harrison County (part).		
Tax District of Clay		Unclassifiable/Attainment.
Marion County		Unclassifiable/Attainment.
Monongalia County.		
Tax District of Cass		Unclassifiable/Attainment.
Martinsburg, WV-Hagerstown, MD:		
Berkeley County		Nonattainment.
Parkersburg-Marietta, WV-OH:		
Pleasants County (part)		Nonattainment.
Tax District of Grant		
Wood County		Nonattainment.
Steubenville-Weirton, OH-WV:		
Brooke County		Nonattainment.
Hancock County		Nonattainment.
Wheeling, WV-OH:		
Marshall County		Nonattainment.
Ohio County		Nonattainment.
Rest of State:		
Barbour County		Unclassifiable/Attainment.
Boone County		Unclassifiable/Attainment.
Braxton County		Unclassifiable/Attainment.
Calhoun County		Unclassifiable/Attainment.
Clay County		Unclassifiable/Attainment.
Doddridge County		Unclassifiable/Attainment.
Fayette County		Unclassifiable/Attainment.
Gilmer County		Unclassifiable/Attainment.
Grant County		Unclassifiable/Attainment.
Greenbrier County		Unclassifiable/Attainment.
Hampshire County		Unclassifiable/Attainment.
Hardy County		Unclassifiable/Attainment.
Harrison County (remainder)		Unclassifiable/Attainment.
Jackson County		Unclassifiable/Attainment.
Jefferson County		Unclassifiable/Attainment.
Lewis County		Unclassifiable/Attainment.
Lincoln County		Unclassifiable/Attainment.
Logan County		Unclassifiable/Attainment.
McDowell County		Unclassifiable/Attainment.
Mason County (remainder)		Unclassifiable/Attainment.
Mercer County		Unclassifiable/Attainment.
Mineral County		Unclassifiable/Attainment.
Mingo County		Unclassifiable/Attainment.
Monongalia County (remainder)		Unclassifiable/Attainment.
Monroe County		Unclassifiable/Attainment.
Morgan County		Unclassifiable/Attainment.
Nicholas County		Unclassifiable/Attainment.
Pendleton County		Unclassifiable/Attainment.
Pleasants County (remainder)		Unclassifiable/Attainment.
Pocahontas County		Unclassifiable/Attainment.
Preston County		Unclassifiable/Attainment.
Raleigh County		Unclassifiable/Attainment.
Randolph County		Unclassifiable/Attainment.
Ritchie County		Unclassifiable/Attainment.
Roane County		Unclassifiable/Attainment.
Summers County		Unclassifiable/Attainment.
Taylor County		Unclassifiable/Attainment.
Tucker County		Unclassifiable/Attainment.
Tyler County		Unclassifiable/Attainment.
Upshur County		Unclassifiable/Attainment.
Webster County		Unclassifiable/Attainment.
Wetzel County		Unclassifiable/Attainment.
Wirt County		Unclassifiable/Attainment.
Wyoming County		Unclassifiable/Attainment.

[a] Includes Indian Country located in each county or area, except as otherwise specified.
[1] This date is 90 days after January 5, 2005, unless otherwise noted.

West Virginia—$PM_{2.5}$ [24-hour NAAQS]

Designated area	Designation for the 1997 NAAQS [a]		Designation for the 2006 NAAQS [a]	
	Date [1]	Type	Date [2]	Type
Charleston, WV:				
Kanawha County		Unclassifiable/Attainment		Nonattainment.
Putnam County		Unclassifiable/Attainment		Nonattainment.
Steubenville-Weirton, OH-WV:				
Brooke County		Unclassifiable/Attainment		Nonattainment.
Hancock County		Unclassifiable/Attainment		Nonattainment.
Rest of State:				
Barbour County		Unclassifiable/Attainment		Unclassifiable/Attainment.
Berkley County		Unclassifiable/Attainment		Unclassifiable/Attainment.
Boone County		Unclassifiable/Attainment		Unclassifiable/Attainment.
Braxton County		Unclassifiable/Attainment		Unclassifiable/Attainment.
Cabell County		Unclassifiable/Attainment		Unclassifiable/Attainment.
Calhoun County		Unclassifiable/Attainment		Unclassifiable/Attainment.
Clay County		Unclassifiable/Attainment		Unclassifiable/Attainment.
Doddridge County		Unclassifiable/Attainment		Unclassifiable/Attainment.
Fayette County		Unclassifiable/Attainment		Unclassifiable/Attainment.
Gilmer County		Unclassifiable/Attainment		Unclassifiable/Attainment.
Grant County		Unclassifiable/Attainment		Unclassifiable/Attainment.
Greenbrier County		Unclassifiable/Attainment		Unclassifiable/Attainment.
Hampshire County		Unclassifiable/Attainment		Unclassifiable/Attainment.
Hardy County		Unclassifiable/Attainment		Unclassifiable/Attainment.
Harrison County		Unclassifiable/Attainment		Unclassifiable/Attainment.
Jackson County		Unclassifiable/Attainment		Unclassifiable/Attainment.
Jefferson County		Unclassifiable/Attainment		Unclassifiable/Attainment.
Lewis County		Unclassifiable/Attainment		Unclassifiable/Attainment.
Lincoln County		Unclassifiable/Attainment		Unclassifiable/Attainment.
Logan County		Unclassifiable/Attainment		Unclassifiable/Attainment.
McDowell County		Unclassifiable/Attainment		Unclassifiable/Attainment.
Mason County		Unclassifiable/Attainment		Unclassifiable/Attainment.
Marion County		Unclassifiable/Attainment		Unclassifiable/Attainment.
Marshall County		Unclassifiable/Attainment		Unclassifiable/Attainment.
Mercer County		Unclassifiable/Attainment		Unclassifiable/Attainment.
Mineral County		Unclassifiable/Attainment		Unclassifiable/Attainment.
Mingo County		Unclassifiable/Attainment		Unclassifiable/Attainment.
Monongalia County		Unclassifiable/Attainment		Unclassifiable/Attainment.
Monroe County		Unclassifiable/Attainment		Unclassifiable/Attainment.
Morgan County		Unclassifiable/Attainment		Unclassifiable/Attainment.

West Virginia—$PM_{2.5}$ [24-hour NAAQS]

Designated area	Designation for the 1997 NAAQS [a]		Designation for the 2006 NAAQS [a]	
	Date [1]	Type	Date [2]	Type
Nicholas County		Unclassifiable/Attainment		Unclassifiable/Attainment.
Ohio County		Unclassifiable/Attainment		Unclassifiable/Attainment.
Pendleton County		Unclassifiable/Attainment		Unclassifiable/Attainment.
Pleasants County		Unclassifiable/Attainment		Unclassifiable/Attainment.
Pocahontas County		Unclassifiable/Attainment		Unclassifiable/Attainment.
Preston County		Unclassifiable/Attainment		Unclassifiable/Attainment.
Raleigh County		Unclassifiable/Attainment		Unclassifiable/Attainment.
Randolph County		Unclassifiable/Attainment		Unclassifiable/Attainment.
Ritchie County		Unclassifiable/Attainment		Unclassifiable/Attainment.
Roane County		Unclassifiable/Attainment		Unclassifiable/Attainment.
Summers County		Unclassifiable/Attainment		Unclassifiable/Attainment.
Taylor County		Unclassifiable/Attainment		Unclassifiable/Attainment.
Tucker County		Unclassifiable/Attainment		Unclassifiable/Attainment.
Tyler County		Unclassifiable/Attainment		Unclassifiable/Attainment.
Upshur County		Unclassifiable/Attainment		Unclassifiable/Attainment.
Wayne County		Unclassifiable/Attainment		Unclassifiable/Attainment.
Webster County		Unclassifiable/Attainment		Unclassifiable/Attainment.
Wetzel County		Unclassifiable/Attainment		Unclassifiable/Attainment.
Wirt County		Unclassifiable/Attainment		Unclassifiable/Attainment.
Wood County		Unclassifiable/Attainment		Unclassifiable/Attainment.
Wyoming County		Unclassifiable/Attainment		Unclassifiable/Attainment.

[a] Includes Indian Country located in each county or area, except as otherwise specified.
[1] This date is 90 days after January 5, 2005, unless otherwise noted.
[2] This date is 30 days after November 13, 2009, unless otherwise noted.

West Virginia—2008 Lead NAAQS

Designated area	Designation for the 2008 NAAQS [a]	
	Date [1]	Type
Whole State		Unclassifiable/Attainment.

[a] Includes Indian Country located in each county or area, except as otherwise specified.
[1] December 31, 2011 unless otherwise noted.

[43 FR 40521, Sept. 12, 1978]

EDITORIAL NOTE: For FEDERAL REGISTER citations affecting §81.349 see the List of CFR Sections Affected, which appears in the Finding Aids section of the printed volume and at *www.fdsys.gov*.

EFFECTIVE DATE NOTE: At 77 FR 30155, May 21, 2012, §81.349 was amended by revising the table heading for ''West Virginia—Ozone (8-Hour Standard)'' to read ''West Virginia—1997 8-Hour Ozone NAAQS (Primary and Secondary)''; by adding a new table entitled ''West Virginia—2008 8-Hour Ozone NAAQS (Primary and Secondary)'' following the newly designated table ''West Virginia—1997 8-Hour Ozone NAAQS (Primary and Secondary)'', effective July 20, 2012. For the convenience of the user, the added text is set forth as follows:

§ 81.349 West Virginia.

* * * * *

West Virginia—2008 8-Hour Ozone NAAQS (Primary and secondary)

Designated area[1]	Designation		Classification	
	Date[2]	Type	Date[2]	Type
Barbour County		Unclassifiable/Attainment		
Berkeley County		Unclassifiable/Attainment		
Boone County		Unclassifiable/Attainment		
Braxton County		Unclassifiable/Attainment		
Brooke County		Unclassifiable/Attainment		
Cabell County		Unclassifiable/Attainment		
Calhoun County		Unclassifiable/Attainment		
Clay County		Unclassifiable/Attainment		
Doddridge County		Unclassifiable/Attainment		
Fayette County		Unclassifiable/Attainment		
Gilmer County		Unclassifiable/Attainment		
Grant County		Unclassifiable/Attainment		
Greenbrier County		Unclassifiable/Attainment		
Hampshire County		Unclassifiable/Attainment		
Hancock County		Unclassifiable/Attainment		
Hardy County		Unclassifiable/Attainment		
Harrison County		Unclassifiable/Attainment		
Jackson County		Unclassifiable/Attainment		
Jefferson County		Unclassifiable/Attainment		
Kanawha County		Unclassifiable/Attainment		
Lewis County		Unclassifiable/Attainment		
Lincoln County		Unclassifiable/Attainment		
Logan County		Unclassifiable/Attainment		
McDowell County		Unclassifiable/Attainment		
Marion County		Unclassifiable/Attainment		
Marshall County		Unclassifiable/Attainment		
Mason County		Unclassifiable/Attainment		
Mercer County		Unclassifiable/Attainment		
Mineral County		Unclassifiable/Attainment		
Mingo County		Unclassifiable/Attainment		
Monongalia County		Unclassifiable/Attainment		
Monroe County		Unclassifiable/Attainment		
Morgan County		Unclassifiable/Attainment		
Nicholas County		Unclassifiable/Attainment		
Ohio County		Unclassifiable/Attainment		
Pendleton County		Unclassifiable/Attainment		
Pleasants County		Unclassifiable/Attainment		
Pocahontas County		Unclassifiable/Attainment		
Preston County		Unclassifiable/Attainment		
Putnam County		Unclassifiable/Attainment		
Raleigh County		Unclassifiable/Attainment		
Randolph County		Unclassifiable/Attainment		
Ritchie County		Unclassifiable/Attainment		
Roane County		Unclassifiable/Attainment		
Summers County		Unclassifiable/Attainment		
Taylor County		Unclassifiable/Attainment		
Tucker County		Unclassifiable/Attainment		
Tyler County		Unclassifiable/Attainment		
Upshur County		Unclassifiable/Attainment		
Wayne County		Unclassifiable/Attainment		
Webster County		Unclassifiable/Attainment		
Wetzel County		Unclassifiable/Attainment		
Wirt County		Unclassifiable/Attainment		
Wood County		Unclassifiable/Attainment		
Wyoming County		Unclassifiable/Attainment		

[1] Includes any Indian country located in each county or area, unless otherwise noted.
[2] This date is July 20, 2012, unless otherwise noted.

* * * * *

§ 81.350 Wisconsin.

Wisconsin—SO_2

Designated area	Does not meet primary standards	Does not meet secondary standards	Cannot be classified	Better than national standards
AQCR 68:				
Grant County				X
AQCR 73:				
Rock County				X
AQCR 123:				
Barron County				X
Buffalo County				X
Chippewa County				X
Clark County				X
Crawford County				X
Dunn County				X
Eau Claire County				X
Jackson County				X
LaCrosse County				X
Monroe County				X
Pepin County				X
Pierce County				X
Polk County				X
St. Croix County				X
Trempealeau County				X
Vernon County				X
AQCR 129:				
Ashland County				X
Bayfield County				X
Burnett County				X
Douglas County				X
Iron County				X
Price County				X
Rusk County				X
Sawyer County				X
Taylor County				X
Washburn County				X
AQCR 237:				
Brown County (city of Green Bay): Subcity area defined as follows				X
North: Green Bay				
West: W. Mason St. and Ashland Ave., along Ashland north to Matter St., west to Crocker St., north on Crocker St. to Bylsby St., then to Green Bay				
South: W. Mason St. and Ashland Ave., east along Mason to Irwin Ave.				
East: W. Mason St., and Irwin Ave., along Irwin Ave. north to Green Bay				
Remainder of corporate limits of Green Bay			X	
Remainder of Brown County				X
AQCR 238:				
Adams County				X
Florence County				X
Forest County				X
Juneau County				X
Langlade County				X
Lincoln County				X
Marathon County				X
Oneida County				X
Portage County				X
Vilas County				X
Wood County				X
AQCR 239:				
Kenosha County				X
Milwaukee County				X
Ozaukee County				X
Racine County				X
Walworth County				X
Washington County				X
Waukesha County				X
AQCR 240:				
Columbia County				X

Wisconsin—SO_2

Designated area	Does not meet primary standards	Does not meet secondary standards	Cannot be classified	Better than national standards
Dane County				X
Dodge County				X
Green County				X
Iowa County				X
Jefferson County				X
Lafayette County				X
Richland County				X
Sauk County				X

Wisconsin—Carbon Monoxide

Designated Area	Designation		Classification	
	Date [1]	Type	Date [1]	Type
Oshkosh Area				
Winnebago County (part)				
City of Oshkosh	1/6/92	Unclassifiable	1/6/92	
Adams County		Unclassifiable/Attainment		
Ashland County		Unclassifiable/Attainment		
Barron County		Unclassifiable/Attainment		
Bayfield County		Unclassifiable/Attainment		
Brown County		Unclassifiable/Attainment		
Buffalo County		Unclassifiable/Attainment		
Burnett County		Unclassifiable/Attainment		
Calumet County		Unclassifiable/Attainment		
Chippewa County		Unclassifiable/Attainment		
Clark County		Unclassifiable/Attainment		
Columbia County		Unclassifiable/Attainment		
Crawford County		Unclassifiable/Attainment		
Dane County		Unclassifiable/Attainment		
Dodge County		Unclassifiable/Attainment		
Door County		Unclassifiable/Attainment		
Douglas County		Unclassifiable/Attainment		
Dunn County		Unclassifiable/Attainment		
Eau Claire County		Unclassifiable/Attainment		
Florence County		Unclassifiable/Attainment		
Fond du Lac County		Unclassifiable/Attainment		
Forest County		Unclassifiable/Attainment		
Grant County		Unclassifiable/Attainment		
Green County		Unclassifiable/Attainment		
Green Lake County		Unclassifiable/Attainment		
Iowa County		Unclassifiable/Attainment		
Iron County		Unclassifiable/Attainment		
Jackson County		Unclassifiable/Attainment		
Jefferson County		Unclassifiable/Attainment		
Juneau County		Unclassifiable/Attainment		
Kenosha County		Unclassifiable/Attainment		
Kewaunee County		Unclassifiable/Attainment		
La Crosse County		Unclassifiable/Attainment		
Lafayette County		Unclassifiable/Attainment		
Langlade County		Unclassifiable/Attainment		
Lincoln County		Unclassifiable/Attainment		
Manitowoc County		Unclassifiable/Attainment		
Marathon County		Unclassifiable/Attainment		
Marinette County		Unclassifiable/Attainment		
Marquette County		Unclassifiable/Attainment		
Menominee County		Unclassifiable/Attainment		
Milwaukee County		Unclassifiable/Attainment		
Monroe County		Unclassifiable/Attainment		
Oconto County		Unclassifiable/Attainment		
Oneida County		Unclassifiable/Attainment		
Outagamie County		Unclassifiable/Attainment		
Ozaukee County		Unclassifiable/Attainment		
Pepin County		Unclassifiable/Attainment		
Pierce County		Unclassifiable/Attainment		
Polk County		Unclassifiable/Attainment		
Portage County		Unclassifiable/Attainment		
Price County		Unclassifiable/Attainment		
Racine County		Unclassifiable/Attainment		

Wisconsin—Carbon Monoxide

Designated Area	Designation		Classification	
	Date [1]	Type	Date [1]	Type
Richland County	.....	Unclassifiable/Attainment		
Rock County	.....	Unclassifiable/Attainment		
Rusk County	.....	Unclassifiable/Attainment		
St. Croix County	.....	Unclassifiable/Attainment		
Sauk County	.....	Unclassifiable/Attainment		
Sawyer County	.....	Unclassifiable/Attainment		
Shawano County	.....	Unclassifiable/Attainment		
Sheboygan County	.....	Unclassifiable/Attainment		
Taylor County	.....	Unclassifiable/Attainment		
Trempealeau County	.....	Unclassifiable/Attainment		
Vernon County	.....	Unclassifiable/Attainment		
Vilas County	.....	Unclassifiable/Attainment		
Walworth County	.....	Unclassifiable/Attainment		
Washburn County	.....	Unclassifiable/Attainment		
Washington County	.....	Unclassifiable/Attainment		
Waukesha County	.....	Unclassifiable/Attainment		
Waupaca County	.....	Unclassifiable/Attainment		
Waushara County	.....	Unclassifiable/Attainment		
Winnebago County	10/17/94	Unclassifiable/Attainment	10/17/94	
Wood County	.....	Unclassifiable/Attainment		

[1] This date is November 15, 1990, unless otherwise noted.

Wisconsin—Ozone (1-Hour Standard)[4]

Designated area	Designation		Classification	
	Date [1]	Type	Date [1]	Type
Door County Area:				
Door County	6/16/03	Attainment.		
Kewaunee County Area:				
Kewaunee County	.....	Attainment		
Manitowoc County Area:				
Manitowoc County	6/16/03	Attainment.		
Milwaukee-Racine Area:				
Kenosha County	11/15/90	Nonattainment	11/15/90	Severe-17.
Milwaukee County	11/15/90	Nonattainment	11/15/90	Severe-17.
Ozaukee County	11/15/90	Nonattainment	11/15/90	Severe-17.
Racine County	11/15/90	Nonattainment	11/15/90	Severe-17.
Washington County	11/15/90	Nonattainment	11/15/90	Severe-17.
Waukesha County	11/15/90	Nonattainment	11/15/90	Severe-17.
Sheboygan County Area:				
Sheboygan County	.....	Attainment		
Walworth County Area:				
Walworth County	.....	Attainment		
Adams County	.....	Unclassifiable/Attainment		
Ashland County	.....	Unclassifiable/Attainment		
Barron County	.....	Unclassifiable/Attainment		
Bayfield County	.....	Unclassifiable/Attainment		
Brown County	.....	Unclassifiable/Attainment		
Buffalo County	.....	Unclassifiable/Attainment		
Burnett County	.....	Unclassifiable/Attainment		
Calumet County	.....	Unclassifiable/Attainment		
Chippewa County	.....	Unclassifiable/Attainment		
Clark County	.....	Unclassifiable/Attainment		
Columbia County	.....	Unclassifiable/Attainment		
Crawford County	.....	Unclassifiable/Attainment		
Dane County	.....	Unclassifiable/Attainment		
Dodge County	.....	Unclassifiable/Attainment		
Douglas County	.....	Unclassifiable/Attainment		
Dunn County	.....	Unclassifiable/Attainment		
Eau Claire County	.....	Unclassifiable/Attainment		
Florence County	.....	Unclassifiable/Attainment		
Fond du Lac County	.....	Unclassifiable/Attainment		
Forest County	.....	Unclassifiable/Attainment		
Grant County	.....	Unclassifiable/Attainment		
Green County	.....	Unclassifiable/Attainment		
Green Lake County	.....	Unclassifiable/Attainment		
Iowa County	.....	Unclassifiable/Attainment		
Iron County	.....	Unclassifiable/Attainment		
Jackson County	.....	Unclassifiable/Attainment		

Wisconsin—Ozone (1-Hour Standard)[4]

Designated area	Designation		Classification	
	Date [1]	Type	Date [1]	Type
Jefferson County		Unclassifiable/Attainment		
Juneau County		Unclassifiable/Attainment		
La Crosse County		Unclassifiable/Attainment		
Lafayette County		Unclassifiable/Attainment		
Langlade County		Unclassifiable/Attainment		
Lincoln County		Unclassifiable/Attainment		
Marathon County		Unclassifiable/Attainment		
Marinette County		Unclassifiable/Attainment		
Marquette County		Unclassifiable/Attainment		
Menominee County		Unclassifiable/Attainment		
Monroe County		Unclassifiable/Attainment		
Oconto County		Unclassifiable/Attainment		
Oneida County		Unclassifiable/Attainment		
Outagamie County		Unclassifiable/Attainment		
Pepin County		Unclassifiable/Attainment		
Pierce County		Unclassifiable/Attainment		
Polk County		Unclassifiable/Attainment		
Portage County		Unclassifiable/Attainment		
Price County		Unclassifiable/Attainment		
Richland County		Unclassifiable/Attainment		
Rock County		Unclassifiable/Attainment		
Rusk County		Unclassifiable/Attainment		
St. Croix County		Unclassifiable/Attainment		
Sauk County		Unclassifiable/Attainment		
Sawyer County		Unclassifiable/Attainment		
Shawano County		Unclassifiable/Attainment		
Taylor County		Unclassifiable/Attainment		
Trempealeau County		Unclassifiable/Attainment		
Vernon County		Unclassifiable/Attainment		
Vilas County		Unclassifiable/Attainment		
Washburn County		Unclassifiable/Attainment		
Waupaca County		Unclassifiable/Attainment		
Waushara County		Unclassifiable/Attainment		
Winnebago County		Unclassifiable/Attainment		
Wood County		Unclassifiable/Attainment		

[1] This date is October 18, 2000, unless otherwise noted.
[2] Attainment date temporarily delayed until November 15, 2007.
[3] This date is January 16, 2001.
[4] The 1-hour ozone standard is revoked effective June 15, 2005 for all areas in Wisconsin. The Door Co., Kewaunee Co., Manitowoc Co., Sheboygan, and Walworth Co. areas are maintenance areas for the 1-hour NAAQS for purposes of 40 CFR part 51 subpart X.

Wisconsin—NO_2 (1971 Annual Standard)

Designated area	Does not meet primary standards	Cannot be classified or better than national standards
State of Wisconsin		X

Wisconsin—NO_2 (2010 1-Hour Standard)

Designated area	Designation [a]	
	Date [1]	Type
Adams County		Unclassifiable/Attainment.
Ashland County		Unclassifiable/Attainment.
Barron County		Unclassifiable/Attainment.
Bayfield County		Unclassifiable/Attainment.
Brown County		Unclassifiable/Attainment.
Buffalo County		Unclassifiable/Attainment.
Burnett County		Unclassifiable/Attainment.
Calumet County		Unclassifiable/Attainment.
Chippewa County		Unclassifiable/Attainment.
Clark County		Unclassifiable/Attainment.
Columbia County		Unclassifiable/Attainment.
Crawford County		Unclassifiable/Attainment.
Dane County		Unclassifiable/Attainment.
Dodge County		Unclassifiable/Attainment.
Door County		Unclassifiable/Attainment.

Wisconsin—NO_2 (2010 1-Hour Standard)

Designated area	Designation [a]	
	Date [1]	Type
Douglas County		Unclassifiable/Attainment.
Dunn County		Unclassifiable/Attainment.
Eau Claire County		Unclassifiable/Attainment.
Florence County		Unclassifiable/Attainment.
Fond du Lac County		Unclassifiable/Attainment.
Forest County		Unclassifiable/Attainment.
Grant County		Unclassifiable/Attainment.
Green County		Unclassifiable/Attainment.
Green Lake County		Unclassifiable/Attainment.
Iowa County		Unclassifiable/Attainment.
Iron County		Unclassifiable/Attainment.
Jackson County		Unclassifiable/Attainment.
Jefferson County		Unclassifiable/Attainment.
Juneau County		Unclassifiable/Attainment.
Kenosha County		Unclassifiable/Attainment.
Kewaunee County		Unclassifiable/Attainment.
La Crosse County		Unclassifiable/Attainment.
Lafayette County		Unclassifiable/Attainment.
Langlade County		Unclassifiable/Attainment.
Lincoln County		Unclassifiable/Attainment.
Manitowoc County		Unclassifiable/Attainment.
Marathon County		Unclassifiable/Attainment.
Marinette County		Unclassifiable/Attainment.
Marquette County		Unclassifiable/Attainment.
Menominee County		Unclassifiable/Attainment.
Milwaukee County		Unclassifiable/Attainment.
Monroe County		Unclassifiable/Attainment.
Oconto County		Unclassifiable/Attainment.
Oneida County		Unclassifiable/Attainment.
Outagamie County		Unclassifiable/Attainment.
Ozaukee County		Unclassifiable/Attainment.
Pepin County		Unclassifiable/Attainment.
Pierce County		Unclassifiable/Attainment.
Polk County		Unclassifiable/Attainment.
Portage County		Unclassifiable/Attainment.
Price County		Unclassifiable/Attainment.
Racine County		Unclassifiable/Attainment.
Richland County		Unclassifiable/Attainment.
Rock County		Unclassifiable/Attainment.
Rusk County		Unclassifiable/Attainment.
St. Croix County		Unclassifiable/Attainment.
Sauk County		Unclassifiable/Attainment.
Sawyer County		Unclassifiable/Attainment.
Shawano County		Unclassifiable/Attainment.
Sheboygan County		Unclassifiable/Attainment.
Taylor County		Unclassifiable/Attainment.
Trempealeau County		Unclassifiable/Attainment.
Vernon County		Unclassifiable/Attainment.
Vilas County		Unclassifiable/Attainment.
Walworth County		Unclassifiable/Attainment.
Washburn County		Unclassifiable/Attainment.
Washington County		Unclassifiable/Attainment.
Waukesha County		Unclassifiable/Attainment.
Waupaca County		Unclassifiable/Attainment.
Waushara County		Unclassifiable/Attainment.
Winnebago County		Unclassifiable/Attainment.
Wood County		Unclassifiable/Attainment.

[a] Includes Indian Country located in each county or area, except as otherwise specified.
[1] This date is 90 days after October 31, 2011, unless otherwise noted.

Wisconsin—Ozone (8-Hour Standard)

Designated area	Designation [a]		Category/classification	
	Date [1]	Type	Date [1]	Type
Door County, WI: Door County	July 12, 2010	Attainment.		
Kewaunee County, WI:				
Kewaunee County.	5/21/08	Attainment		
Manitowoc County, WI:				

Wisconsin—Ozone (8-Hour Standard)

Designated area	Designation [a]		Category/classification	
	Date [1]	Type	Date [1]	Type
Manitowoc County, WI: Manitowoc County.	July 12, 2010	Attainment.		
Milwaukee-Racine, WI:				
Kenosha County		Nonattainment		Subpart 2/Moderate.
Milwaukee County		Nonattainment		Subpart 2/Moderate.
Ozaukee County		Nonattainment		Subpart 2/Moderate.
Racine County		Nonattainment		Subpart 2/Moderate.
Washington County		Nonattainment		Subpart 2/Moderate.
Waukesha County		Nonattainment		Subpart 2/Moderate.
Sheboygan, WI:				
Sheboygan County		Nonattainment		Subpart 2/Moderate.
Rest of State:				
Adams County		Unclassifiable/Attainment		
Ashland County		Unclassifiable/Attainment		
Barron County		Unclassifiable/Attainment		
Bayfield County		Unclassifiable/Attainment		
Brown County		Unclassifiable/Attainment		
Buffalo County		Unclassifiable/Attainment		
Burnett County		Unclassifiable/Attainment		
Calumet County		Unclassifiable/Attainment		
Chippewa County		Unclassifiable/Attainment		
Clark County		Unclassifiable/Attainment		
Columbia County		Unclassifiable/Attainment		
Crawford County		Unclassifiable/Attainment		
Dane County		Unclassifiable/Attainment		
Dodge County		Unclassifiable/Attainment		
Douglas County		Unclassifiable/Attainment		
Dunn County		Unclassifiable/Attainment		
Eau Claire County.		Unclassifiable/Attainment		
Florence County		Unclassifiable/Attainment		
Fond du Lac County		Unclassifiable/Attainment		
Forest County		Unclassifiable/Attainment		
Grant County		Unclassifiable/Attainment		
Green County		Unclassifiable/Attainment		
Green Lake County		Unclassifiable/Attainment		
Iowa County		Unclassifiable/Attainment		
Iron County		Unclassifiable/Attainment		
Jackson County		Unclassifiable/Attainment		
Jefferson County		Unclassifiable/Attainment		
Juneau County		Unclassifiable/Attainment		
La Crosse County		Unclassifiable/Attainment		
Lafayette County		Unclassifiable/Attainment		
Langlade County		Unclassifiable/Attainment		
Lincoln County		Unclassifiable/Attainment		
Marathon County		Unclassifiable/Attainment		
Marinette County		Unclassifiable/Attainment		
Marquette County		Unclassifiable/Attainment		
Menominee County		Unclassifiable/Attainment		
Monroe County		Unclassifiable/Attainment		
Oconto County		Unclassifiable/Attainment		
Oneida County		Unclassifiable/Attainment		
Outagamie County		Unclassifiable/Attainment		
Pepin County		Unclassifiable/Attainment		
Pierce County		Unclassifiable/Attainment		
Polk County		Unclassifiable/Attainment		
Portage County		Unclassifiable/Attainment		
Price County		Unclassifiable/Attainment		
Richland County		Unclassifiable/Attainment		
Rock County		Unclassifiable/Attainment		
Rusk County		Unclassifiable/Attainment		
St. Croix County		Unclassifiable/Attainment		
Sauk County		Unclassifiable/Attainment		
Sawyer County		Unclassifiable/Attainment		
Shawano County		Unclassifiable/Attainment		
Taylor County		Unclassifiable/Attainment		
Trempealeau County		Unclassifiable/Attainment		
Vernon County		Unclassifiable/Attainment		
Vilas County		Unclassifiable/Attainment		
Walworth County		Unclassifiable/Attainment		
Washburn County		Unclassifiable/Attainment		
Waupaca County		Unclassifiable/Attainment		

Wisconsin—Ozone (8-Hour Standard)

Designated area	Designation [a]		Category/classification	
	Date [1]	Type	Date [1]	Type
Waushara County		Unclassifiable/Attainment		
Winnebago County		Unclassifiable/Attainment		
Wood County		Unclassifiable/Attainment		

[a] Includes Indian Country located in each county or area, except as otherwise specified.
[1] This date is June 15, 2004, unless otherwise noted.

Wisconsin—$PM_{2.5}$ (Annual NAAQS)

Designated area	Designation [a]	
	Date [1]	Type
Statewide:		
Adams County		Unclassifiable/Attainment.
Ashland County		Unclassifiable/Attainment.
Barron County		Unclassifiable/Attainment.
Bayfield County		Unclassifiable/Attainment.
Brown County		Unclassifiable/Attainment.
Buffalo County		Unclassifiable/Attainment.
Burnett County		Unclassifiable/Attainment.
Calumet County		Unclassifiable/Attainment.
Chippewa County		Unclassifiable/Attainment.
Clark County		Unclassifiable/Attainment.
Columbia County		Unclassifiable/Attainment.
Crawford County		Unclassifiable/Attainment.
Dane County		Unclassifiable/Attainment.
Dodge County		Unclassifiable/Attainment.
Door County		Unclassifiable/Attainment.
Douglas County		Unclassifiable/Attainment.
Dunn County		Unclassifiable/Attainment.
Eau Claire County		Unclassifiable/Attainment.
Florence County		Unclassifiable/Attainment.
Fond du Lac County		Unclassifiable/Attainment.
Forest County		Unclassifiable/Attainment.
Grant County		Unclassifiable/Attainment.
Green County		Unclassifiable/Attainment.
Green Lake County		Unclassifiable/Attainment.
Iowa County		Unclassifiable/Attainment.
Iron County		Unclassifiable/Attainment.
Jackson County		Unclassifiable/Attainment.
Jefferson County		Unclassifiable/Attainment.
Juneau County		Unclassifiable/Attainment.
Kenosha County		Unclassifiable/Attainment.
Kewaunee County		Unclassifiable/Attainment.
La Crosse County		Unclassifiable/Attainment.
Lafayette County		Unclassifiable/Attainment.
Langlade County		Unclassifiable/Attainment.
Lincoln County		Unclassifiable/Attainment.
Manitowoc County		Unclassifiable/Attainment.
Marathon County		Unclassifiable/Attainment.
Marinette County		Unclassifiable/Attainment.
Marquette County		Unclassifiable/Attainment.
Menominee County		Unclassifiable/Attainment.
Milwaukee County		Unclassifiable/Attainment.
Monroe County		Unclassifiable/Attainment.
Oconto County		Unclassifiable/Attainment.
Oneida County		Unclassifiable/Attainment.
Outagamie County		Unclassifiable/Attainment.
Ozaukee County		Unclassifiable/Attainment.
Pepin County		Unclassifiable/Attainment.
Pierce County		Unclassifiable/Attainment.
Polk County		Unclassifiable/Attainment.
Portage County		Unclassifiable/Attainment.
Price County		Unclassifiable/Attainment.
Racine County		Unclassifiable/Attainment.
Richland County		Unclassifiable/Attainment.
Rock County		Unclassifiable/Attainment.
Rusk County		Unclassifiable/Attainment.
St. Croix County		Unclassifiable/Attainment.
Sauk County		Unclassifiable/Attainment.
Sawyer County		Unclassifiable/Attainment.

Wisconsin—$PM_{2.5}$ (Annual NAAQS)

Designated area	Designation [a]	
	Date [1]	Type
Shawano County		Unclassifiable/Attainment.
Sheboygan County		Unclassifiable/Attainment.
Taylor County		Unclassifiable/Attainment.
Trempealeau County		Unclassifiable/Attainment.
Vernon County		Unclassifiable/Attainment.
Vilas County		Unclassifiable/Attainment.
Walworth County		Unclassifiable/Attainment.
Washburn County		Unclassifiable/Attainment.
Washington County		Unclassifiable/Attainment.
Waukesha County		Unclassifiable/Attainment.
Waupaca County		Unclassifiable/Attainment.
Waushara County		Unclassifiable/Attainment.
Winnebago County		Unclassifiable/Attainment.
Wood County		Unclassifiable/Attainment.

[a] Includes Indian Country located in each county or area, except as otherwise specified.
[1] This date is 90 days after January 5, 2005, unless otherwise noted.

Wisconsin—$PM_{2.5}$ [24-hour NAAQS]

Designated area	Designation for the 1997 NAAQS [a]		Designation for the 2006 NAAQS [a]	
	Date [1]	Type	Date [2]	Type
Milwaukee-Racine, WI:				
Milwaukee County		Unclassifiable/Attainment		Nonattainment.
Racine County		Unclassifiable/Attainment		Nonattainment.
Waukesha County		Unclassifiable/Attainment		Nonattainment.
Rest of State:				
Adams County		Unclassifiable/Attainment		Unclassifiable/Attainment.
Ashland County		Unclassifiable/Attainment		Unclassifiable/Attainment.
Barron County		Unclassifiable/Attainment		Unclassifiable/Attainment.
Bayfield County		Unclassifiable/Attainment		Unclassifiable/Attainment.
Brown County		Unclassifiable/Attainment		Unclassifiable/Attainment.
Buffalo County		Unclassifiable/Attainment		Unclassifiable/Attainment.
Burnett County		Unclassifiable/Attainment		Unclassifiable/Attainment.
Calumet County		Unclassifiable/Attainment		Unclassifiable/Attainment.
Chippewa County		Unclassifiable/Attainment		Unclassifiable/Attainment.
Clark County		Unclassifiable/Attainment		Unclassifiable/Attainment.
Columbia County		Unclassifiable/Attainment		Unclassifiable/Attainment.
Crawford County		Unclassifiable/Attainment		Unclassifiable/Attainment.
Dane County		Unclassifiable/Attainment		Unclassifiable/Attainment.
Dodge County		Unclassifiable/Attainment		Unclassifiable/Attainment.
Door County		Unclassifiable/Attainment		Unclassifiable/Attainment.
Douglas County		Unclassifiable/Attainment		Unclassifiable/Attainment.
Dunn County		Unclassifiable/Attainment		Unclassifiable/Attainment.
Eau Claire County		Unclassifiable/Attainment		Unclassifiable/Attainment.
Florence County		Unclassifiable/Attainment		Unclassifiable/Attainment.
Fond du Lac County		Unclassifiable/Attainment		Unclassifiable/Attainment.

Wisconsin—$PM_{2.5}$ [24-hour NAAQS]

Designated area	Designation for the 1997 NAAQS [a]		Designation for the 2006 NAAQS [a]	
	Date [1]	Type	Date [2]	Type
Forest County		Unclassifiable/Attainment		Unclassifiable/Attainment.
Grant County		Unclassifiable/Attainment		Unclassifiable/Attainment.
Green County		Unclassifiable/Attainment		Unclassifiable/Attainment.
Green Lake County		Unclassifiable/Attainment		Unclassifiable/Attainment.
Iowa County		Unclassifiable/Attainment		Unclassifiable/Attainment.
Iron County		Unclassifiable/Attainment		Unclassifiable/Attainment.
Jackson County		Unclassifiable/Attainment		Unclassifiable/Attainment.
Jefferson County		Unclassifiable/Attainment		Unclassifiable/Attainment.
Juneau County		Unclassifiable/Attainment		Unclassifiable/Attainment.
Kenosha County		Unclassifiable/Attainment		Unclassifiable/Attainment.
Kewaunee County		Unclassifiable/Attainment		Unclassifiable/Attainment.
La Crosse County		Unclassifiable/Attainment		Unclassifiable/Attainment.
Lafayette County		Unclassifiable/Attainment		Unclassifiable/Attainment.
Langlade County		Unclassifiable/Attainment		Unclassifiable/Attainment.
Lincoln County		Unclassifiable/Attainment		Unclassifiable/Attainment.
Manitowoc County		Unclassifiable/Attainment		Unclassifiable/Attainment.
Marathon County		Unclassifiable/Attainment		Unclassifiable/Attainment.
Marinette County		Unclassifiable/Attainment		Unclassifiable/Attainment.
Marquette County		Unclassifiable/Attainment		Unclassifiable/Attainment.
Menominee County		Unclassifiable/Attainment		Unclassifiable/Attainment.
Monroe County		Unclassifiable/Attainment		Unclassifiable/Attainment.
Oconto County		Unclassifiable/Attainment		Unclassifiable/Attainment.
Oneida County		Unclassifiable/Attainment		Unclassifiable/Attainment.
Outagamie County		Unclassifiable/Attainment		Unclassifiable/Attainment.
Ozaukee County		Unclassifiable/Attainment		Unclassifiable/Attainment.
Pepin County		Unclassifiable/Attainment		Unclassifiable/Attainment.
Pierce County		Unclassifiable/Attainment		Unclassifiable/Attainment.
Polk County		Unclassifiable/Attainment		Unclassifiable/Attainment.
Portage County		Unclassifiable/Attainment		Unclassifiable/Attainment.
Price County		Unclassifiable/Attainment		Unclassifiable/Attainment.
Richland County		Unclassifiable/Attainment		Unclassifiable/Attainment.
Rock County		Unclassifiable/Attainment		Unclassifiable/Attainment.
Rusk County		Unclassifiable/Attainment		Unclassifiable/Attainment.
St. Croix County		Unclassifiable/Attainment		Unclassifiable/Attainment.
Sauk County		Unclassifiable/Attainment		Unclassifiable/Attainment.

Wisconsin—$PM_{2.5}$ [24-hour NAAQS]

Designated area	Designation for the 1997 NAAQS [a]		Designation for the 2006 NAAQS [a]	
	Date [1]	Type	Date [2]	Type
Sawyer County		Unclassifiable/Attainment		Unclassifiable/Attainment.
Shawano County		Unclassifiable/Attainment		Unclassifiable/Attainment.
Sheboygan County		Unclassifiable/Attainment		Unclassifiable/Attainment.
Taylor County		Unclassifiable/Attainment		Unclassifiable/Attainment.
Trempealeau County		Unclassifiable/Attainment		Unclassifiable/Attainment.
Vernon County		Unclassifiable/Attainment		Unclassifiable/Attainment.
Vilas County		Unclassifiable/Attainment		Unclassifiable/Attainment.
Walworth County		Unclassifiable/Attainment		Unclassifiable/Attainment.
Washburn County		Unclassifiable/Attainment		Unclassifiable/Attainment.
Washington County		Unclassifiable/Attainment		Unclassifiable/Attainment.
Waupaca County		Unclassifiable/Attainment		Unclassifiable/Attainment.
Waushara County		Unclassifiable/Attainment		Unclassifiable/Attainment.
Winnebago County		Unclassifiable/Attainment		Unclassifiable/Attainment.
Wood County		Unclassifiable/Attainment		Unclassifiable/Attainment.

[a] Includes Indian Country located in each county or area, except as otherwise specified.
[1] This date is 90 days after January 5, 2005, unless otherwise noted.
[2] This date is 30 days after November 13, 2009, unless otherwise noted.

Wisconsin—2008 Lead NAAQS

Designated area	Designation for the 2008 NAAQS [a]	
	Date [1]	Type
Whole State		Unclassifiable/Attainment.

[a] Includes Indian Country located in each county or area, except as otherwise specified.
[1] December 31, 2011 unless otherwise noted.

[43 FR 8964, Mar. 3, 1978]

EDITORIAL NOTE: For FEDERAL REGISTER citations affecting § 81.350, see the List of CFR Sections Affected, which appears in the Finding Aids section of the printed volume and at *www.fdsys.gov*.

EFFECTIVE DATE NOTES: 1. At 77 FR 30156, May 21, 2012, § 81.350 was amended by revising the table heading for ''Wisconsin—Ozone (8-Hour Standard)'' to read ''Wisconsin—1997 8-Hour Ozone NAAQS (Primary and Secondary)''; by adding a new table entitled ''Wisconsin—2008 8-Hour Ozone NAAQS (Primary and Secondary)'' following the newly designated table ''Wisconsin—1997 8-Hour Ozone NAAQS (Primary and Secondary)'', effective July 20, 2012. For the convenience of the user, the added text is set forth as follows:

§ 81.350 Wisconsin.

* * * * *

Wisconsin—2008 8-Hour Ozone NAAQS (Primary and secondary)

Designated area	Designation		Classification	
	Date [1]	Type	Date [1]	Type
Sheboygan County, WI: [2] Sheboygan County		Nonattainment		Marginal.
Adams County [3]		Unclassifiable/Attainment		
Ashland County [3]		Unclassifiable/Attainment		
Barron County [3]		Unclassifiable/Attainment		

Wisconsin—2008 8-Hour Ozone NAAQS (Primary and secondary)

Designated area	Designation		Classification	
	Date [1]	Type	Date [1]	Type
Bayfield County [3]		Unclassifiable/Attainment		
Brown County [3]		Unclassifiable/Attainment		
Buffalo County [3]		Unclassifiable/Attainment		
Burnett County [3]		Unclassifiable/Attainment		
Calumet County [3]		Unclassifiable/Attainment		
Chippewa County [3]		Unclassifiable/Attainment		
Clark County [3]		Unclassifiable/Attainment		
Columbia County [3]		Unclassifiable/Attainment		
Crawford County [3]		Unclassifiable/Attainment		
Dane County [3]		Unclassifiable/Attainment		
Dodge County [3]		Unclassifiable/Attainment		
Door County [3]		Unclassifiable/Attainment		
Douglas County [3]		Unclassifiable/Attainment		
Dunn County [3]		Unclassifiable/Attainment		
Eau Claire County [3]		Unclassifiable/Attainment		
Florence County [3]		Unclassifiable/Attainment		
Fond du Lac County [3]		Unclassifiable/Attainment		
Forest County [3]		Unclassifiable/Attainment		
Grant County [3]		Unclassifiable/Attainment		
Green County [3]		Unclassifiable/Attainment		
Green Lake County [3]		Unclassifiable/Attainment		
Iowa County [3]		Unclassifiable/Attainment		
Iron County [3]		Unclassifiable/Attainment		
Jackson County [3]		Unclassifiable/Attainment		
Jefferson County [3]		Unclassifiable/Attainment		
Juneau County [3]		Unclassifiable/Attainment		
Kewaunee County [3]		Unclassifiable/Attainment		
La Crosse County [3]		Unclassifiable/Attainment		
Lafayette County [3]		Unclassifiable/Attainment		
Langlade County [3]		Unclassifiable/Attainment		
Lincoln County [3]		Unclassifiable/Attainment		
Manitowoc County [3]		Unclassifiable/Attainment		
Marathon County [3]		Unclassifiable/Attainment		
Marinette County [3]		Unclassifiable/Attainment		
Marquette County [3]		Unclassifiable/Attainment		
Menominee County [3]		Unclassifiable/Attainment		
Milwaukee County [3]		Unclassifiable/Attainment		
Monroe County [3]		Unclassifiable/Attainment		
Oconto County [3]		Unclassifiable/Attainment		
Oneida County [3]		Unclassifiable/Attainment		
Outagamie County [3]		Unclassifiable/Attainment		
Ozaukee County [3]		Unclassifiable/Attainment		
Pepin County [3]		Unclassifiable/Attainment		
Pierce County [3]		Unclassifiable/Attainment		
Polk County [3]		Unclassifiable/Attainment		
Portage County [3]		Unclassifiable/Attainment		
Price County [3]		Unclassifiable/Attainment		
Racine County [3]		Unclassifiable/Attainment		
Richland County [3]		Unclassifiable/Attainment		
Rock County [3]		Unclassifiable/Attainment		
Rusk County [3]		Unclassifiable/Attainment		
St. Croix County [3]		Unclassifiable/Attainment		
Sauk County [3]		Unclassifiable/Attainment		
Sawyer County [3]		Unclassifiable/Attainment		
Shawano County [3]		Unclassifiable/Attainment		
Taylor County [3]		Unclassifiable/Attainment		
Trempealeau County [3]		Unclassifiable/Attainment		
Vernon County [3]		Unclassifiable/Attainment		
Vilas County [3]		Unclassifiable/Attainment		
Walworth County [3]		Unclassifiable/Attainment		
Washburn County [3]		Unclassifiable/Attainment		
Washington County [3]		Unclassifiable/Attainment		
Waukesha County [3]		Unclassifiable/Attainment		
Waupaca County [3]		Unclassifiable/Attainment		
Waushara County [3]		Unclassifiable/Attainment		
Winnebago County [3]		Unclassifiable/Attainment		
Wood County [3]		Unclassifiable/Attainment		

[1] This date is July 20, 2012, unless otherwise noted.
[2] Excludes Indian country located in each area, unless otherwise noted.
[3] Includes any Indian country in each county or area, unless otherwise specified.

* * * * *

2. At 77 FR 34228, June 11, 2012, § 81.350, is amended in the table entitled ''Wisconsin—2008 8-Hour Ozone NAAQS (Primary and Secondary)'' by adding a new entry for ''Chicago-Naperville, IL-IN-WI'' before the entry for ''Sheboygan County, WI''; and by adding a new entry for ''Kenosha County (remainder)'' before the entry for ''Kewaunee County'', effective July 20, 2012. For the convenience of the user, the added text is set forth as follows:

§ 81.350 Wisconsin.

* * * * *

Wisconsin—2008 8-Hour Ozone NAAQS
[Primary and secondary]

Designated area	Designation		Classification	
	Date[1]	Type	Date[1]	Type
Chicago-Naperville, IL-IN-WI:[2]	.....	Nonattainment	.....	Marginal.
Kenosha County (part)				
Pleasant Prairie Township				
Somers Township				
* * *	*	*	*	*
Kenosha County (remainder)[3]	.....	Unclassifiable/Attainment		
* * *	*	*	*	*

[1] This date is July 20, 2012, unless otherwise noted.
[2] Excludes Indian country located in each area, unless otherwise noted.
[3] Includes any Indian country in each county or area, unless otherwise specified.

* * * * *

§ 81.351 Wyoming.

Wyoming—SO_2

Designated area	Does not meet primary standards	Does not meet secondary standards	Cannot be classified	Better than national standards
Entire State	.....	.....	.....	X

Wyoming—Carbon Monoxide

Designated Area	Designation		Classification	
	Date[1]	Type	Date[1]	Type
Statewide	.....	Unclassifiable/Attainment		
Albany County				
Big Horn County				
Campbell County				
Carbon County				
Converse County				
Crook County				
Fremont County				
Goshen County				
Hot Springs County				
Johnson County				
Laramie County				
Lincoln County				
Natrona County				
Niobrara County				
Park County				
Platte County				
Sheridan County				
Sublette County				
Sweetwater County				
Teton County				
Uinta County				
Washakie County				
Weston County				

[1] This date is November 15, 1990, unless otherwise noted.

Wyoming—Ozone (1-Hour Standard)[2]

Designated area	Designation		Classification	
	Date [1]	Type	Date [1]	Type
Statewide		Unclassifiable/Attainment		
Albany County				
Big Horn County				
Campbell County				
Carbon County				
Converse County				
Crook County				
Fremont County				
Goshen County				
Hot Springs County				
Johnson County				
Laramie County				
Lincoln County				
Natrona County				
Niobrara County				
Park County				
Platte County				
Sheridan County				
Sublette County				
Sweetwater County				
Teton County				
Uinta County				
Washakie County				
Weston County				

[1] This date is October 18, 2000, unless otherwise noted.
[2] The 1-hour ozone standard is revoked effective June 15, 2005 for all areas in Wyoming.

Wyoming—PM–10

Designated Area	Designation		Classification	
	Date	Type	Date	Type
Sheridan County:				
City of Sheridan	11/15/90	Nonattainment	11/15/90	Moderate.
Trona Industrial Area	11/15/90	Unclassifiable	.....	
Campbell County (part)	11/15/90	Unclassifiable		
Converse County (part).				
That area bounded by Township 40 through 52 North, and Ranges 69 through 73 West, inclusive of the Sixth Principal Meridian, Campbell and Converse Counties, excluding the areas defined as the Pacific Power and Light Area, the Hampshire Energy Area, and the Kennecott/Puron PSD Baseline Area—Powder River Basin.				
Campbell County (part), That areabounded by NW1/4 of Section 27, T50N, R71W, Campbell County, Wyoming—Pacific Power and Light Area.	11/15/90	Unclassifiable		
Campbell County (part), That area bounded by Section 6 excluding the SW¼; E½ Section 7; Section 17 excluding the SW¼; Section 14 excluding the SE¼; Sections 2, 3, 4, 5, 8, 9, 10, 11, 15, 16 of T48N, R70W and Section 26 excluding the NE¼; SW¼ Section 23; Sections 19, 20, 21, 22, 27, 28, 29, 30, 31, 32, 33, 34, 35 of T49N, R70W.—Hampshire Energy Area.	11/15/90	Unclassifiable	.....	
Campbell County (part), That area described by the W½SW¼ Section 18, W½NW¼, NW¼SW¼ Section 19, T47N, R70W, S½ Section 13, N½, N½SW¼, N½SE¼ Section 24, T47N, R71W.—Kennecott/Puron PSD Baseline Area.	11/15/90	Unclassifiable	.....	
Rest of State[1]	11/15/90	Unclassifiable	.....	

[1] Denotes a single area designation for baseline area purposes.

Wyoming—NO_2 (1971 Annual Standard)

Designated area	Does not meet primary standards	Cannot be classified or better than national standards
Entire State		X

Wyoming—NO_2 (2010 1-Hour Standard)

Designated area	Designation [a]	
	Date [1]	Type
Albany County		Unclassifiable/Attainment.
Big Horn County		Unclassifiable/Attainment.
Campbell County		Unclassifiable/Attainment.
Carbon County		Unclassifiable/Attainment.
Converse County		Unclassifiable/Attainment.
Crook County		Unclassifiable/Attainment.
Fremont County		Unclassifiable/Attainment.
Goshen County		Unclassifiable/Attainment.
Hot Springs County		Unclassifiable/Attainment.
Johnson County		Unclassifiable/Attainment.
Laramie County		Unclassifiable/Attainment.
Lincoln County		Unclassifiable/Attainment.
Natrona County		Unclassifiable/Attainment.
Niobrara County		Unclassifiable/Attainment.
Park County		Unclassifiable/Attainment.
Platte County		Unclassifiable/Attainment.
Sheridan County		Unclassifiable/Attainment.
Sublette County		Unclassifiable/Attainment.
Sweetwater County		Unclassifiable/Attainment.
Teton County		Unclassifiable/Attainment.
Uinta County		Unclassifiable/Attainment.
Washakie County		Unclassifiable/Attainment.
Weston County		Unclassifiable/Attainment.

[a] Includes Indian Country located in each county or area, except as otherwise specified.
[1] This date is 90 days after October 31, 2011, unless otherwise noted.

Wyoming—Ozone (8-Hour Standard)

Designated area	Designation [a]		Category/classification	
	Date [1]	Type	Date [1]	Type
Statewide		Unclassifiable/Attainment		
Albany County		Unclassifiable/Attainment		
Big Horn County		Unclassifiable/Attainment		
Campbell County		Unclassifiable/Attainment		
Carbon County		Unclassifiable/Attainment		
Converse County		Unclassifiable/Attainment		
Crook County		Unclassifiable/Attainment		
Fremont County		Unclassifiable/Attainment		
Goshen County		Unclassifiable/Attainment		
Hot Springs County		Unclassifiable/Attainment		
Johnson County		Unclassifiable/Attainment		
Laramie County		Unclassifiable/Attainment		
Lincoln County		Unclassifiable/Attainment		
Natrona County		Unclassifiable/Attainment		
Niobrara County		Unclassifiable/Attainment		
Park County		Unclassifiable/Attainment		
Platte County		Unclassifiable/Attainment		
Sheridan County		Unclassifiable/Attainment		
Sublette County		Unclassifiable/Attainment		
Sweetwater County		Unclassifiable/Attainment		
Teton County		Unclassifiable/Attainment		
Uinta County		Unclassifiable/Attainment		
Washakie County		Unclassifiable/Attainment		
Weston County		Unclassifiable/Attainment		

[a] Includes Indian Country located in each county or area, except as otherwise specified.
[1] This date is June 15, 2004, unless otherwise noted.

Wyoming—$PM_{2.5}$ (Annual NAAQS)

Designated area	Designation [a]	
	Date [1]	Type
Casper, WY:		
Natrona County (part)		Unclassifiable/Attainment.
The portion within the City of Casper		
Cheyenne, WY:		
Laramie County (part)		Unclassifiable/Attainment.
The portion within the City of Cheyenne		
Evanston, WY:		
Uinta County (part)		Unclassifiable/Attainment.
The portion within the City of Evanston		
Gillette, WY:		
Campbell County (part)		Unclassifiable/Attainment.
The portion within the City of Gillette		
Jackson, WY:		
Teton County (part)		Unclassifiable/Attainment.
The portion within the City of Jackson		
Lander, WY:		
Fremont County (part)		Unclassifiable/Attainment.
The portion within the City of Lander		
Laramie, WY:		
Albany County (part)		Unclassifiable/Attainment.
The portion within the City of Laramie		
Riverton, WY:		
Fremont County (part)		Unclassifiable/Attainment.
The portion within the City of Riverton		
Rock Springs, WY:		
Sweetwater County (part)		Unclassifiable/Attainment.
The portion within the City of Rock Springs		
Sheridan, WY:		
Sheridan County (part)		Unclassifiable/Attainment.
The portion within the City of Sheridan		
Rest of State:		
Albany County (remainder)		Unclassifiable/Attainment.
Big Horn County		Unclassifiable/Attainment.
Campbell County		Unclassifiable/Attainment.
Carbon County		Unclassifiable/Attainment.
Converse County		Unclassifiable/Attainment.
Crook County		Unclassifiable/Attainment.
Fremont County (remainder)		Unclassifiable/Attainment.
Goshen County		Unclassifiable/Attainment.
Hot Springs County		Unclassifiable/Attainment.
Johnson County		Unclassifiable/Attainment.
Laramie County (remainder)		Unclassifiable/Attainment.
Lincoln County		Unclassifiable/Attainment.
Natrona County (remainder)		Unclassifiable/Attainment.
Niobrara County		Unclassifiable/Attainment.
Park County		Unclassifiable/Attainment.
Platte County		Unclassifiable/Attainment.
Sheridan County (remainder)		Unclassifiable/Attainment.
Sublette County		Unclassifiable/Attainment.
Sweetwater County		Unclassifiable/Attainment.
Teton County (remainder)		Unclassifiable/Attainment.
Uinta County (remainder)		Unclassifiable/Attainment.
Washakie County		Unclassifiable/Attainment.
Weston County		Unclassifiable/Attainment.

[a] Includes Indian Country located in each county or area, except as otherwise specified.
[1] This date is 90 days after January 5, 2005, unless otherwise noted.

Wyoming—$PM_{2.5}$ [24-hour NAAQS]

Designated area	Designation for the 1997 NAAQS [a]		Designation for the 2006 NAAQS [a]	
	Date [1]	Type	Date [2]	Type
Casper, WY:				
Natrona County (part)		Unclassifiable/Attainment		Unclassifiable/Attainment.
The portion within the City of Casper.				
Cheyenne, WY:				
Laramie County (part)		Unclassifiable/Attainment		Unclassifiable/Attainment.

Wyoming—$PM_{2.5}$ [24-hour NAAQS]

Designated area	Designation for the 1997 NAAQS [a]		Designation for the 2006 NAAQS [a]	
	Date [1]	Type	Date [2]	Type
The portion within the City of Cheyenne.				
Evanston, WY:				
Uinta County (part)		Unclassifiable/Attainment		Unclassifiable/Attainment.
The portion within the City of Evanston.				
Gillette, WY:				
Campbell County (part)		Unclassifiable/Attainment		Unclassifiable/Attainment.
The portion within the City of Gillette.				
Jackson, WY:				
Teton County (part)		Unclassifiable/Attainment		Unclassifiable/Attainment.
The portion within the City of Jackson.				
Lander, WY:				
Fremont County (part)		Unclassifiable/Attainment		Unclassifiable/Attainment.
The portion within the City of Lander.				
Laramie, WY:				
Albany County (part)		Unclassifiable/Attainment		Unclassifiable/Attainment.
The portion within the City of Laramie.				
Riverton, WY:				
Fremont County (part)		Unclassifiable/Attainment		Unclassifiable/Attainment.
The portion within the City of Riverton.				
Rock Springs, WY:				
Sweetwater County (part)		Unclassifiable/Attainment		Unclassifiable/Attainment.
The portion within the City of Rock Springs.				
Sheridan, WY:				
Sheridan County (part)		Unclassifiable/Attainment		Unclassifiable/Attainment.
The portion within the City of Sheridan.				
Rest of State:				
Albany County (remainder)		Unclassifiable/Attainment		Unclassifiable/Attainment.
Big Horn County		Unclassifiable/Attainment		Unclassifiable/Attainment.
Campbell County		Unclassifiable/Attainment		Unclassifiable/Attainment.
Carbon County		Unclassifiable/Attainment		Unclassifiable/Attainment.
Converse County		Unclassifiable/Attainment		Unclassifiable/Attainment.
Crook County		Unclassifiable/Attainment		Unclassifiable/Attainment.
Fremont County (remainder)		Unclassifiable/Attainment		Unclassifiable/Attainment.
Goshen County		Unclassifiable/Attainment		Unclassifiable/Attainment.
Hot Springs County		Unclassifiable/Attainment		Unclassifiable/Attainment.
Johnson County		Unclassifiable/Attainment		Unclassifiable/Attainment.
Laramie County (remainder)		Unclassifiable/Attainment		Unclassifiable/Attainment.
Lincoln County		Unclassifiable/Attainment		Unclassifiable/Attainment.
Natrona County (remainder)		Unclassifiable/Attainment		Unclassifiable/Attainment.
Niobrara County		Unclassifiable/Attainment		Unclassifiable/Attainment.

Wyoming—$PM_{2.5}$ [24-hour NAAQS]

Designated area	Designation for the 1997 NAAQS [a]		Designation for the 2006 NAAQS [a]	
	Date [1]	Type	Date [2]	Type
Park County		Unclassifiable/Attainment		Unclassifiable/Attainment.
Platte County		Unclassifiable/Attainment		Unclassifiable/Attainment.
Sheridan County (remainder)		Unclassifiable/Attainment		Unclassifiable/Attainment.
Sublette County		Unclassifiable/Attainment		Unclassifiable/Attainment.
Sweetwater County		Unclassifiable/Attainment		Unclassifiable/Attainment.
Teton County (remainder)		Unclassifiable/Attainment		Unclassifiable/Attainment.
Uinta County (remainder)		Unclassifiable/Attainment		Unclassifiable/Attainment.
Washakie County		Unclassifiable/Attainment		Unclassifiable/Attainment.
Weston County		Unclassifiable/Attainment		Unclassifiable/Attainment.

[a] Includes Indian Country located in each county or area, except as otherwise specified.
[1] This date is 90 days after January 5, 2005, unless otherwise noted.
[2] This date is 30 days after November 13, 2009, unless otherwise noted.

Wyoming—2008 Lead NAAQS

Designated area	Designation for the 2008 NAAQS [a]	
	Date [1]	Type
Whole State		Unclassifiable/Attainment.

[a] Includes Indian Country located in each county or area, except as otherwise specified.
[1] December 31, 2011 unless otherwise noted.

[43 FR 8964, Mar. 3, 1978, as amended at 47 FR 31878, July 23, 1982; 48 FR 54483, Dec. 5, 1983; 56 FR 56853, Nov. 6, 1991; 57 FR 56778, Nov. 30, 1992; 58 FR 4350, Jan. 14, 1993; 60 FR 55798, 55800, Nov. 3, 1995; 61 FR 47060, Sept. 6, 1996; 63 FR 31093, June 5, 1998; 65 FR 45271, July 20, 2000; 69 FR 23948, Apr. 30, 2004; 70 FR 1016, Jan. 5, 2005; 70 FR 44478, Aug. 3, 2005; 74 FR 58778, Nov. 13, 2009; 76 FR 72119, Nov. 22, 2011; 77 FR 9585, Feb. 17, 2012]

EFFECTIVE DATE NOTE: At 77 FR 30157, May 21, 2012, §81.351 was amended by revising the table heading for ''Wyoming—Ozone (8-Hour Standard)'' to read ''Wyoming—1997 8-Hour Ozone NAAQS (Primary and Secondary)''; by adding a new table entitled ''Wyoming—2008 8-Hour Ozone NAAQS (Primary and Secondary)'' following the newly designated table ''Wyoming—1997 8-Hour Ozone NAAQS (Primary and Secondary)'', effective July 20, 2012. For the convenience of the user, the added text is set forth as follows:

§81.351 Wyoming.

* * * * *

Wyoming—2008 8-Hour Ozone NAAQS (Primary and secondary)

Designated area	Designation		Classification	
	Date [1]	Type	Date [1]	Type
Upper Green River Basin Area, WY: [2] Lincoln County (part)		Nonattainment		Marginal.

Wyoming—2008 8-Hour Ozone NAAQS (Primary and secondary)

Designated area	Designation		Classification	
	Date [1]	Type	Date [1]	Type
The area of the county north and east of the boundary defined by a line starting at the point defined by the intersection of the southwest corner Section 30 Range (R) 115 West Township (T) 27N and the northwest corner of Section 31 R 115 West T27N of Sublette County at Sublette County's border with Lincoln County. From this point the boundary moves to the west 500 feet to Aspen Creek. The boundary follows the centerline of Aspen Creek downstream to the confluence of Aspen Creek and Fontenelle Creek (in R116W T26N, Section 1). From this point the boundary moves generally to the south along the centerline of Fontenelle Creek to the confluence of Fontenelle Creek and Roney Creek (in R115W T24N Section 6). From the confluence, the boundary moves generally to the east along the centerline of Fontenelle Creek and into the Fontenelle Reservoir (in R112W T24N Section 6). The boundary moves east southeast along the centerline of the Fontenelle Reservoir and then toward the south along the centerline of the Green River to where the Green River in R111W T24N Section 31 crosses into Sweetwater County.				
Sublette County				
Sweetwater County (part)				

Wyoming—2008 8-Hour Ozone NAAQS (Primary and secondary)

Designated area	Designation		Classification	
	Date [1]	Type	Date [1]	Type
The area of the county west and north of the boundary which begins at the midpoint of the Green River, where the Green River enters Sweetwater County from Lincoln County in R111W T24N Section 31. From this point, the boundary follows the center of the channel of the Green River generally to the south and east to the confluence of the Green River and the Big Sandy River (in R109W T22N Section 28). From this point, the boundary moves generally north and east along the centerline of the Big Sandy River to the confluence of the Big Sandy River with Little Sandy Creek (in R106W T25N Section 33). The boundary continues generally toward the northeast along the centerline of Little Sandy Creek to the confluence of Little Sandy Creek and Pacific Creek (in R106W T25N Section 24). From this point, the boundary moves generally to the east and north along the centerline of Pacific Creek to the confluence of Pacific Creek and Whitehorse Creek (in R103W T26N Section 10). From this point the boundary follows the centerline of Whitehorse Creek generally to the northeast until it reaches the eastern boundary of Section 1 R103W T26N. From the point where Whitehorse Creek crosses the eastern section line of Section 1 R103W T26N, the boundary moves straight north along the section line to the southeast corner of Section 36 R103W T27N in Sublette County where the boundary ends.				
Rest of State and Rest of Indian Country	.....	Unclassifiable/Attainment		

[1] This date is July 20, 2012, unless otherwise noted.
[2] Excludes Indian country located in each area, unless otherwise noted.

* * * * *

§ 81.352 American Samoa.

American Samoa—TSP

Designated area	Does not meet primary standards	Does not meet secondary standards	Cannot be classified	Better than national standards
Whole State	.....	.....	.....	[1] X

[1] EPA designation only.

American Samoa—SO_2

Designated area	Does not meet primary standards	Does not meet secondary standards	Cannot be classified	Better than national standards
Whole State				[1] X

[1] EPA designation only.

American Samoa—Carbon Monoxide

Designated Area	Designation		Classification	
	Date [1]	Type	Date [1]	Type
Statewide		Unclassifiable/Attainment		

[1] This date is November 15, 1990, unless otherwise noted.

American Samoa—Ozone (1-Hour Standard)[2]

Designated area	Designation		Classification	
	Date [1]	Type	Date [1]	Type
Statewide		Unclassifiable/Attainment		

[1] This date is October 18, 2000, unless otherwise noted.
[2] The 1-hour ozone standard is revoked effective June 15, 2005 for all areas in American Samoa.

American Samoa—NO_2 (1971 Annual Standard)

Designated area	Does not meet primary standards	Cannot be classified or better than national standards
Whole State		[1] X

[1] EPA designation only.

American Samoa—NO_2 (2010 1-Hour Standard)

Designated area	Designation [a]	
	Date [1]	Type
State of American Samoa		Unclassifiable/Attainment.

[a] Includes Indian Country located in each county or area, except as otherwise specified.
[1] This date is 90 days after October 31, 2011, unless otherwise noted.

American Samoa—Ozone (8-Hour Standard)

Designated area	Designation [a]		Category/classification	
	Date [1]	Type	Date [1]	Type
Statewide:		Unclassifiable/Attainment		

[1] This date is June 15, 2004, unless otherwise noted.

American Samoa—$PM_{2.5}$ (Annual NAAQS)

Designated area	Designation[a]	
	Date [1]	Type
Statewide:		
Eastern District		Unclassifiable/Attainment.
Manu'a District		Unclassifiable/Attainment.
Rose Island		Unclassifiable/Attainment.
Swains Island		Unclassifiable/Attainment.
Western District		Unclassifiable/Attainment.

[a] Includes Indian Country located in each county or area, except as otherwise specified.
[1] This date is 90 days after January 5, 2005, unless otherwise noted.

American Samoa—$PM_{2.5}$ [24-hour NAAQS]

Designated area	Designation for the 1997 NAAQS [a]		Designation for the 2006 NAAQS [a]	
	Date [1]	Type	Date [2]	Type
Territory wide:				

American Samoa—$PM_{2.5}$ [24-hour NAAQS]

Designated area	Designation for the 1997 NAAQS [a]		Designation for the 2006 NAAQS [a]	
	Date [1]	Type	Date [2]	Type
Eastern District		Unclassifiable/Attainment		Unclassifiable/Attainment.
Manu'a District		Unclassifiable/Attainment		Unclassifiable/Attainment.
Rose Island		Unclassifiable/Attainment		Unclassifiable/Attainment.
Swains Island		Unclassifiable/Attainment		Unclassifiable/Attainment.
Western District		Unclassifiable/Attainment		Unclassifiable/Attainment.

[a] Includes Indian Country located in each county or area, except as otherwise specified.
[1] This date is 90 days after January 5, 2005, unless otherwise noted.
[2] This date is 30 days after November 13, 2009, unless otherwise noted.

American Samoa—2008 Lead NAAQS

Designated area	Designation for the 2008 NAAQS [a]	
	Date [1]	Type
Whole State		Unclassifiable/Attainment.

[a] Includes Indian Country located in each county or area, except as otherwise specified.
[1] December 31, 2011 unless otherwise noted.

[43 FR 8964, Mar. 3, 1978, as amended at 56 FR 56854, Nov. 6, 1991; 63 FR 31094, June 5, 1998; 65 FR 45272, July 20, 2000; 69 FR 23949, Apr. 30, 2004; 70 FR 1017, Jan. 5, 2005; 70 FR 44478, Aug. 3, 2005; 74 FR 58779, Nov. 13, 2009; 76 FR 72119, Nov. 22, 2011; 77 FR 9586, Feb. 17, 2012]

EFFECTIVE DATE NOTE: At 77 FR 30159, May 21, 2012, § 81.352 was amended by revising the table heading for ''American Samoa—Ozone (8-Hour Standard)'' to read ''American Samoa—1997 8-Hour Ozone NAAQS (Primary and Secondary)''; by adding a new table entitled ''American Samoa—2008 8-Hour Ozone NAAQS (Primary and Secondary)'' following the newly designated table ''American Samoa—1997 8-Hour Ozone NAAQS (Primary and Secondary)'', effective July 20, 2012. For the convenience of the user, the added text is set forth as follows:

§ 81.352 American Samoa.

* * * * *

American Samoa—2008 8-Hour Ozone NAAQS (Primary and secondary)

Designated area	Designation		Classification	
	Date [1]	Type	Date [1]	Type
Territory Wide and Any Areas of Indian Country: American Samoa		Unclassifiable/Attainment		

[1] This date is July 20, 2012, unless otherwise noted.

* * * * *

§ 81.353 Guam.

Guam—TSP

Designated area	Does not meet primary standards	Does not meet secondary standards	Cannot be classified	Better than national standards
Whole State			[1] X	

[1] EPA designation replaces State designation.

Guam—SO_2

Designated area	Does not meet primary standards	Does not meet secondary standards	Cannot be classified	Better than national standards
That portion of Guam within a 3½ km radius of the Piti Power Plant	X			
That portion of Guam within a 3½ km radius of the Tanguisson Power Plant	[1] X			
Remainder of State (Guam)				X

[1] EPA designation replaces State designation.

Guam—Carbon Monoxide

Designated Area	Designation		Classification	
	Date [1]	Type	Date [1]	Type
Statewide		Unclassifiable/Attainment		

[1] This date is November 15, 1990, unless otherwise noted.

Guam—Ozone (1-Hour Standard)[2]

Designated area	Designation		Classification	
	Date [1]	Type	Date [1]	Type
Statewide		Unclassifiable/Attainment		

[1] This date is October 18, 2000, unless otherwise noted.
[2] The 1-hour ozone standard is revoked effective June 15, 2005 for all areas in Guam.

Guam—NO_2 (1971 Annual Standard)

Designated area	Does not meet primary standards	Cannot be classified or better than national standards
Whole State		X

Guam—NO_2 (2010 1-Hour Standard)

Designated area	Designation [a]	
	Date [1]	Type
State of Guam		Unclassifiable/Attainment.

[a] Includes Indian Country located in each county or area, except as otherwise specified.
[1] This date is 90 days after October 31, 2011, unless otherwise noted.

Guam—Ozone (8-Hour Standard)

Designated area	Designation [a]		Category/classification	
	Date [1]	Type	Date [1]	Type
Statewide:		Unclassifiable/Attainment		

[1] This date is June 15, 2004, unless otherwise noted.

Guam—$PM_{2.5}$ (Annual NAAQS)

Designated area	Designation [a]	
	Date [1]	Type
Statewide: Guam		Unclassifiable/Attainment.

[a] Includes Indian Country located in each county or area, except as otherwise specified.
[1] This date is 90 days after January 5, 2005, unless otherwise noted.

Guam—$PM_{2.5}$
[24-hour NAAQS]

Designated area	Designation for the 1997 NAAQS [a]		Designation for the 2006 NAAQS [a]	
	Date [1]	Type	Date [2]	Type
Territory wide:				

Guam—$PM_{2.5}$
[24-hour NAAQS]

Designated area	Designation for the 1997 NAAQS [a]		Designation for the 2006 NAAQS [a]	
	Date [1]	Type	Date [2]	Type
Guam		Unclassifiable/Attainment		Unclassifiable/Attainment.

[a] Includes Indian Country located in each county or area, except as otherwise specified.
[1] This date is 90 days after January 5, 2005, unless otherwise noted.
[2] This date is 30 days after November 13, 2009, unless otherwise noted.

Guam—2008 Lead NAAQS

Designated area	Designation for the 2008 NAAQS [a]	
	Date [1]	Type
Whole State		Unclassifiable/Attainment.

[a] Includes Indian Country located in each county or area, except as otherwise specified.
[1] December 31, 2011 unless otherwise noted.

[43 FR 8964, Mar. 3, 1978, as amended at 44 FR 16393, Mar. 19, 1979; 47 FR 28626, July 1, 1982; 56 FR 56854, Nov. 6, 1991; 63 FR 31094, June 5, 1998; 65 FR 45272, July 20, 2000; 69 FR 23949, Apr. 30, 2004; 70 FR 1017, Jan. 5, 2005; 70 FR 44478, Aug. 3, 2005; 74 FR 58779, Nov. 13, 2009; 76 FR 72119, Nov. 22, 2011; 77 FR 9586, Feb. 17, 2012]

EFFECTIVE DATE NOTE: At 77 FR 30159, May 21, 2012, § 81.353 was amended by revising the table heading for ''Guam—Ozone (8-Hour Standard)'' to read ''Guam—1997 8-Hour Ozone NAAQS (Primary and Secondary)''; by adding a new table entitled ''Guam—2008 8-Hour Ozone NAAQS (Primary and Secondary)'' following the newly designated table ''Guam—1997 8-Hour Ozone NAAQS (Primary and Secondary)'', effective July 20, 2012. For the convenience of the user, the added text is set forth as follows:

§ 81.353 Guam.

* * * * *

Guam—2008 8-Hour Ozone NAAQS (Primary and secondary)

Designated area	Designation		Classification	
	Date [1]	Type	Date [1]	Type
Territory Wide and Any Areas of Indian Country: Guam		Unclassifiable/Attainment		

[1] This date is July 20, 2012, unless otherwise noted.

* * * * *

§ 81.354 Northern Mariana Islands.

Northern Mariana Islands—TSP

Designated area	Does not meet primary standards	Does not meet secondary standards	Cannot be classified	Better than national standards
Whole State				[1] X

[1] EPA designation only.

Northern Mariana Islands—SO_2

Designated area	Does not meet primary standards	Does not meet secondary standards	Cannot be classified	Better than national standards
Whole State				[1] X

[1] EPA designation only.

Northern Mariana Islands—Carbon Monoxide

Designated Area	Designation		Classification	
	Date [1]	Type	Date [1]	Type
Whole State		Unclassifiable/Attainment		

[1] This date is November 15, 1990, unless otherwise noted.

Northern Mariana Islands—Ozone (1-Hour Standard)[2]

Designated area	Designation		Classification	
	Date [1]	Type	Date [1]	Type
Whole State		Unclassifiable/Attainment		

[1] This date is October 18, 2000, unless otherwise noted.
[2] The 1-hour ozone standard is revoked effective June 15, 2005 for all areas in Northern Mariana Islands.

Northern Mariana Islands—NO_2 (1971 Annual Standard)

Designated area	Does not meet primary standards	Cannot be classified or better than national standards
Whole State		[1] X

[1] EPA designation only.

Northern Mariana Islands—NO_2 (2010 1-Hour Standard)

Designated area	Designation [a]	
	Date [1]	Type
Northern Mariana Islands		Unclassifiable/Attainment.

[a] Includes Indian Country located in each county or area, except as otherwise specified.
[1] This date is 90 days after October 31, 2011, unless otherwise noted.

Northern Mariana Islands—Ozone (8-Hour Standard)

Designated area	Designation		Category/classification	
	Date [1]	Type	Date [1]	Type
Whole State		Unclassifiable/Attainment		

[1] This date is June 15, 2004, unless otherwise noted.

Northern Mariana Islands—$PM_{2.5}$ (Annual NAAQS)

Designated area	Designation [a]	
	Date [1]	Type
Statewide:		
Northern Islands Municipality		Unclassifiable/Attainment.
Rota Municipality		Unclassifiable/Attainment.
Saipan Municipality		Unclassifiable/Attainment.
Tinian Municipality		Unclassifiable/Attainment.

[a] Includes Indian Country located in each county or area, except as otherwise specified.
[1] This date is 90 days after January 5, 2005, unless otherwise noted.

Northern Mariana Islands—$PM_{2.5}$
[24-hour NAAQS]

Designated area	Designation for the 1997 NAAQS [a]		Designation for the 2006 NAAQS [a]	
	Date [1]	Type	Date [2]	Type
Territory wide:				
Northern Islands Municipality		Unclassifiable/Attainment		Unclassifiable/Attainment.
Rota Municipality		Unclassifiable/Attainment		Unclassifiable/Attainment.
Saipan Municipality		Unclassifiable/Attainment		Unclassifiable/Attainment.
Tinian Municipality		Unclassifiable/Attainment		Unclassifiable/Attainment.

[a] Includes Indian Country located in each county or area, except as otherwise specified.

[1] This date is 90 days after January 5, 2005, unless otherwise noted.
[2] This date is 30 days after November 13, 2009, unless otherwise noted.

Northern Mariana Islands—2008 Lead NAAQS

Designated area	Designation for the 2008 NAAQS [a]	
	Date [1]	Type
Whole State		Unclassifiable/Attainment.

[a] Includes Indian Country located in each county or area, except as otherwise specified.
[1] December 31, 2011 unless otherwise noted.

[43 FR 8964, Mar. 3, 1978, as amended at 56 FR 56855, Nov. 6, 1991; 63 FR 31094, June 5, 1998; 65 FR 45272, July 20, 2000; 69 FR 23949, Apr. 30, 2004; 70 FR 1018, Jan. 5, 2005; 70 FR 44478, Aug. 3, 2005; 74 FR 58779, Nov. 13, 2009; 76 FR 72119, Nov. 22, 2011; 77 FR 9586, Feb. 17, 2012]

EFFECTIVE DATE NOTE: At 77 FR 30159, May 21, 2012, § 81.354 was amended by revising the table heading for ''Northern Mariana Islands—Ozone (8-Hour Standard)'' to read ''Northern Mariana Islands—1997 8-Hour Ozone NAAQS (Primary and Secondary)''; by adding a new table entitled ''Northern Mariana Islands—2008 8-Hour Ozone NAAQS (Primary and Secondary)'' following the newly designated table ''Northern Mariana Islands—1997 8-Hour Ozone NAAQS (Primary and Secondary)'', effective July 20, 2012. For the convenience of the user, the added text is set forth as follows:

§ 81.354 Northern Mariana Islands.

* * * * *

Northern Mariana Islands—2008 8-Hour Ozone NAAQS (Primary and secondary)

Designated area	Designation		Classification	
	Date [1]	Type	Date [1]	Type
Northern Mariana Islands and Any Areas of Indian Country.		Unclassifiable/Attainment		

[1] This date is July 20, 2012, unless otherwise noted.

* * * * *

§ 81.355 Puerto Rico.

Puerto Rico—SO_2

Designated area	Does not meet primary standards	Does not meet secondary standards	Cannot be classified	Better than national standards
Puerto Rico AQCR				X

Puerto Rico—Carbon Monoxide

Designated Area	Designation		Classification	
	Date [1]	Type	Date [1]	Type
Statewide		Unclassifiable/Attainment		
Adjuntas Municipio				
Aguada Municipio				
Aguadilla Municipio				
Aguas Buenas Municipio				
Aibonito Municipio				
Anasco Municipio				
Arecibo Municipio				
Arroyo Municipio				
Barceloneta Municipio				
Barranquitas Munic.				
Bayamon County				
Caba Rojo Municipio				
Caguas Municipio				
Camuy Municipio				
Canovanas Municipio				
Carolina Municipio				
Catano County				

Puerto Rico—Carbon Monoxide

Designated Area	Designation		Classification	
	Date [1]	Type	Date [1]	Type
Cayey Municipio				
Ceiba Municipio				
Ciales Municipio				
Cidra Municipio				
Coama Municipio				
Comeria Municipio				
Corozal Municipio				
Culebra Municipio				
Dorado Municipio				
Fajardo Municipio				
Florida Municipio				
Guanica Municipio				
Guayama Municipio				
Guayanilla Municipio				
Guaynabo County				
Gurabo Municipio				
Hatillo Municipio				
Hormigueros Municipio				
Humacao Municipio				
Isabela Municipio				
Jayuya Municipio				
Juana Diaz Municipio				
Juncos Municipio				
Lajas Municipio				
Lares Municipio				
Las Marias Municipio				
Las Piedras Municipio				
Loiza Municipio				
Luquillo Municipio				
Manati Municipio				
Maricao Municipio				
Maunabo Municipio				
Mayaguez Municipio				
Moca Municipio				
Morovis Municipio				
Naguabo Municipio				
Naranjito Municipio				
Orocovis Municipio				
Patillas Minicipio				
Penuelas Municipio				
Ponce Municipio				
Quebradillas Municipio				
Rincon Municipio				
Rio Grande Municipio				
Sabana Grande Municipio				
Salinas Municipio				
San German Municipio				
San Juan Municipio				
San Lorenzo Municipio				
San Sebastian Municipio				
Santa Isabel Municipio				
Toa Alta Municipio				
Toa Baja County				
Trujilla Alto Municipio				
Utuado Municipio				
Vega Alta Municipio				
Vega Baja Municipio				
Vieques Municipio				
Villalba Municipio				
Yabucoa Municipio				
Yauco Municipio				

[1] This date is November 15, 1990, unless otherwise noted.

Puerto Rico—Ozone (1-Hour Standard)[2]

Designated area	Designation		Classification	
	Date [1]	Type	Date [1]	Type
Statewide		Unclassifiable/Attainment		
Adjuntas Municipio				

Puerto Rico—Ozone (1-Hour Standard)[2]

Designated area	Designation		Classification	
	Date [1]	Type	Date [1]	Type
Aguada Municipio				
Aguadilla Municipio				
Aguas Buenas Municipio				
Aibonito Municipio				
Anasco Municipio				
Arecibo Municipio				
Arroyo Municipio				
Barceloneta Municipio				
Barranquitas Munic.				
Bayamon County				
Cabo Rojo Municipio				
Caguas Municipio				
Camuy Municipio				
Canovanas Municipio				
Carolina Municipio				
Catano County				
Cayey Municipio				
Ceiba Municipio				
Ciales Municipio				
Cidra Municipio				
Coamo Municipio				
Comerio Municipio				
Corozal Municipio				
Culebra Municipio				
Dorado Municipio				
Fajardo Municipio				
Florida Municipio				
Guanica Municipio				
Guayama Municipio				
Guayanilla Municipio				
Guaynabo County				
Gurabo Municipio				
Hatillo Municipio				
Hormigueros Municipio				
Humacao Municipio				
Isabela Municipio				
Jayuya Municipio				
Juana Diaz Municipio				
Juncos Municipio				
Lajas Municipio				
Lares Municipio				
Las Marias Municipio				
Las Piedras Municipio				
Loiza Municipio				
Luquillo Municipio				
Manati Municipio				
Maricao Municipio				
Maunabo Municipio				
Mayaguez Municipio				
Moca Municipio				
Morovis Municipio				
Naguabo Municipio				
Naranjito Municipio				
Orocovis Municipio				
Patillas Minicipio				
Penuelas Municipio				
Ponce Municipio				
Quebradillas Municipio				
Rincon Municipio				
Rio Grande Municipio				
Sabana Grande Municipio				
Salinas Municipio				
San German Municipio				
San Juan Municipio				
San Lorenzo Municipio				
San Sebastian Municipio				
Santa Isabel Municipio				
Toa Alta Municipio				
Toa Baja County				
Trujillo Alto Municipio				
Utuado Municipio				

Puerto Rico—Ozone (1-Hour Standard)[2]

Designated area	Designation		Classification	
	Date [1]	Type	Date [1]	Type
Vega Alta Municipio				
Vega Baja Municipio				
Vieques Municipio				
Villalba Municipio				
Yabucoa Municipio				
Yauco Municipio				

[1] This date is October 18, 2000, unless otherwise noted.
[2] The 1-hour ozone standard is revoked effective June 15, 2005 for all areas in Puerto Rico.

Puerto Rico—PM–10

Designated Area	Designation		Classification	
	Date	Type	Date	Type
Municipality of Guaynabo	1/12/10	Attainment.		
Rest of Commonwealth	11/15/90	Unclassifiable		

Puerto Rico—NO_2 (1971 Annual Standard)

Designated area	Does not meet primary standards	Cannot be classified or better than national standards
Puerto Rico AQCR		X

Puerto Rico—NO_2 (2010 1-Hour Standard)

Designated area	Designation [a]	
	Date [1]	Type
Adjuntas Municipio		Unclassifiable/Attainment.
Aguada Municipio		Unclassifiable/Attainment.
Aguadilla Municipio		Unclassifiable/Attainment.
Aguas Buenas Municipio		Unclassifiable/Attainment.
Aibonito Municipio		Unclassifiable/Attainment.
Añasco Municipio		Unclassifiable/Attainment.
Arecibo Municipio		Unclassifiable/Attainment.
Arroyo Municipio		Unclassifiable/Attainment.
Barceloneta Municipio		Unclassifiable/Attainment.
Barranquitas Municipio		Unclassifiable/Attainment.
Bayamón County		Unclassifiable/Attainment.
Cabo Rojo Municipio		Unclassifiable/Attainment.
Caguas Municipio		Unclassifiable/Attainment.
Camuy Municipio		Unclassifiable/Attainment.
Canóvanas Municipio		Unclassifiable/Attainment.
Carolina Municipio		Unclassifiable/Attainment.
Cataño County		Unclassifiable/Attainment.
Cayey Municipio		Unclassifiable/Attainment.
Ceiba Municipio		Unclassifiable/Attainment.
Ciales Municipio		Unclassifiable/Attainment.
Cidra Municipio		Unclassifiable/Attainment.
Coamo Municipio		Unclassifiable/Attainment.
Comerío Municipio		Unclassifiable/Attainment.
Corozal Municipio		Unclassifiable/Attainment.
Culebra Municipio		Unclassifiable/Attainment.
Dorado Municipio		Unclassifiable/Attainment.
Fajardo Municipio		Unclassifiable/Attainment.
Florida Municipio		Unclassifiable/Attainment.
Guánica Municipio		Unclassifiable/Attainment.
Guayama Municipio		Unclassifiable/Attainment.
Guayanilla Municipio		Unclassifiable/Attainment.
Guaynabo County		Unclassifiable/Attainment.
Gurabo Municipio		Unclassifiable/Attainment.
Hatillo Municipio		Unclassifiable/Attainment.
Hormigueros Municipio		Unclassifiable/Attainment.
Humacao Municipio		Unclassifiable/Attainment.
Isabela Municipio		Unclassifiable/Attainment.
Jayuya Municipio		Unclassifiable/Attainment.
Juana Díaz Municipio		Unclassifiable/Attainment.

Puerto Rico—NO_2 (2010 1-Hour Standard)

Designated area	Designation [a]	
	Date [1]	Type
Juncos Municipio		Unclassifiable/Attainment.
Lajas Municipio		Unclassifiable/Attainment.
Lares Municipio		Unclassifiable/Attainment.
Las Marías Municipio		Unclassifiable/Attainment.
Las Piedras Municipio		Unclassifiable/Attainment.
Loíza Municipio		Unclassifiable/Attainment.
Luquillo Municipio		Unclassifiable/Attainment.
Manatí Municipio		Unclassifiable/Attainment.
Maricao Municipio		Unclassifiable/Attainment.
Maunabo Municipio		Unclassifiable/Attainment.
Mayagnez Municipio		Unclassifiable/Attainment.
Moca Municipio		Unclassifiable/Attainment.
Morovis Municipio		Unclassifiable/Attainment.
Naguabo Municipio		Unclassifiable/Attainment.
Naranjito Municipio		Unclassifiable/Attainment.
Orocovis Municipio		Unclassifiable/Attainment.
Patillas Municipio		Unclassifiable/Attainment.
Peñuelas Municipio		Unclassifiable/Attainment.
Ponce Municipio		Unclassifiable/Attainment.
Quebradillas Municipio		Unclassifiable/Attainment.
Rincón Municipio		Unclassifiable/Attainment.
Río Grande Municipio		Unclassifiable/Attainment.
Sabana Grande Municipio		Unclassifiable/Attainment.
Salinas Municipio		Unclassifiable/Attainment.
San Germán Municipio		Unclassifiable/Attainment.
San Juan Municipio		Unclassifiable/Attainment.
San Lorenzo Municipio		Unclassifiable/Attainment.
San Sebastián Municipio		Unclassifiable/Attainment.
Santa Isabel Municipio		Unclassifiable/Attainment.
Toa Alta Municipio		Unclassifiable/Attainment.
Toa Baja County		Unclassifiable/Attainment.
Trujillo Alto Municipio		Unclassifiable/Attainment.
Utuado Municipio		Unclassifiable/Attainment.
Vega Alta Municipio		Unclassifiable/Attainment.
Vega Baja Municipio		Unclassifiable/Attainment.
Vieques Municipio		Unclassifiable/Attainment.
Villalba Municipio		Unclassifiable/Attainment.
Yabucoa Municipio		Unclassifiable/Attainment.
Yauco Municipio		Unclassifiable/Attainment.

[a] Includes Indian Country located in each county or area, except as otherwise specified.
[1] This date is 90 days after October 31, 2011, unless otherwise noted.

Puerto Rico—Ozone (8-Hour Standard)

Designated area	Designation		Category/classification	
	Date [1]	Type	Date [1]	Type
Statewide		Unclassifiable/Attainment		
Adjuntas Municipio				
Aguada Municipio				
Aguadilla Municipio				
Aguas Buenas Municipio				
Aibonito Municipio				
Añasco Municipio				
Arecibo Municipio				
Arroyo Municipio				
Barceloneta Municipio				
Barranquitas Municipio				
Bayamón County				
Cabo Rojo Municipio				
Caguas Municipio				
Camuy Municipio				
Canóvanas Municipio				
Carolina Municipio				
Cataño County				
Cayey Municipio				
Ceiba Municipio				
Ciales Municipio				
Cidra Municipio				
Coamo Municipio				

Puerto Rico—Ozone (8-Hour Standard)

Designated area	Designation		Category/classification	
	Date [1]	Type	Date [1]	Type
Comerío Municipio				
Corozal Municipio				
Culebra Municipio				
Dorado Municipio				
Fajardo Municipio				
Florida Municipio				
Guánica Municipio				
Guayama Municipio				
Guayanilla Municipio				
Guaynabo County				
Gurabo Municipio				
Hatillo Municipio				
Hormigueros Municipio				
Humacao Municipio				
Isabela Municipio				
Jayuya Municipio				
Juana Díaz Municipio				
Juncos Municipio				
Lajas Municipio				
Lares Municipio				
Las Marías Municipio				
Las Piedras Municipio				
Loíza Municipio				
Luquillo Municipio				
Manatí Municipio				
Maricao Municipio				
Maunabo Municipio				
Mayagüez Municipio				
Moca Municipio				
Morovis Municipio				
Naguabo Municipio				
Naranjito Municipio				
Orocovis Municipio				
Patillas Municipio				
Peñuelas Municipio				
Ponce Municipio				
Quebradillas Municipio				
Rincón Municipio				
Río Grande Municipio				
Sabana Grande Municipio				
Salinas Municipio				
San Germán Municipio				
San Juan Municipio				
San Lorenzo Municipio				
San Sebastián Municipio				
Santa Isabel Municipio				
Toa Alta Municipio				
Toa Baja County				
Trujillo Alto Municipio				
Utuado Municipio				
Vega Alta Municipio				
Vega Baja Municipio				
Vieques Municipio				
Villalba Municipio				
Yabucoa Municipio				
Yauco Municipio				

[1] This date is June 15, 2004, unless otherwise noted.

Puerto Rico—$PM_{2.5}$ (Annual NAAQS)

Designated area	Designation [a]	
	Date [1]	Type
Statewide:		
Adjuntas Municipio		Unclassifiable/Attainment.
Aguada Municipio		Unclassifiable/Attainment.
Aguadilla Municipio		Unclassifiable/Attainment.
Aguas Buenas Municipio		Unclassifiable/Attainment.
Aibonito Municipio		Unclassifiable/Attainment.
Añasco Municipio		Unclassifiable/Attainment.

Puerto Rico—$PM_{2.5}$ (Annual NAAQS)

Designated area	Designation [a]	
	Date [1]	Type
Arecibo Municipio		Unclassifiable/Attainment.
Arroyo Municipio		Unclassifiable/Attainment.
Barceloneta Municipio		Unclassifiable/Attainment.
Barranquitas Municipio		Unclassifiable/Attainment.
Bayamón County		Unclassifiable/Attainment.
Cabo Rojo Municipio		Unclassifiable/Attainment.
Caguas Municipio		Unclassifiable/Attainment.
Camuy Municipio		Unclassifiable/Attainment.
Canóvanas Municipio		Unclassifiable/Attainment.
Carolina Municipio		Unclassifiable/Attainment.
Cataño County		Unclassifiable/Attainment.
Cayey Municipio		Unclassifiable/Attainment.
Ceiba Municipio		Unclassifiable/Attainment.
Ciales Municipio		Unclassifiable/Attainment.
Cidra Municipio		Unclassifiable/Attainment.
Coamo Municipio		Unclassifiable/Attainment.
Comerío Municipio		Unclassifiable/Attainment.
Corozal Municipio		Unclassifiable/Attainment.
Culebra Municipio		Unclassifiable/Attainment.
Dorado Municipio		Unclassifiable/Attainment.
Fajardo Municipio		Unclassifiable/Attainment.
Florida Municipio		Unclassifiable/Attainment.
Guánica Municipio		Unclassifiable/Attainment.
Guayama Municipio		Unclassifiable/Attainment.
Guayanilla Municipio		Unclassifiable/Attainment.
Guaynabo County		Unclassifiable/Attainment.
Gurabo Municipio		Unclassifiable/Attainment.
Hatillo Municipio		Unclassifiable/Attainment.
Hormigueros Municipio		Unclassifiable/Attainment.
Humacao Municipio		Unclassifiable/Attainment.
Isabela Municipio		Unclassifiable/Attainment.
Jayuya Municipio		Unclassifiable/Attainment.
Juana Díaz Municipio		Unclassifiable/Attainment.
Juncos Municipio		Unclassifiable/Attainment.
Lajas Municipio		Unclassifiable/Attainment.
Lares Municipio		Unclassifiable/Attainment.
Las Marías Municipio		Unclassifiable/Attainment.
Las Piedras Municipio		Unclassifiable/Attainment.
Loíza Municipio		Unclassifiable/Attainment.
Luquillo Municipio		Unclassifiable/Attainment.
Manatí Municipio		Unclassifiable/Attainment.
Maricao Municipio		Unclassifiable/Attainment.
Maunabo Municipio		Unclassifiable/Attainment.
Mayagnez Municipio		Unclassifiable/Attainment.
Moca Municipio		Unclassifiable/Attainment.
Morovis Municipio		Unclassifiable/Attainment.
Naguabo Municipio		Unclassifiable/Attainment.
Naranjito Municipio		Unclassifiable/Attainment.
Orocovis Municipio		Unclassifiable/Attainment.
Patillas Municipio		Unclassifiable/Attainment.
Peñuelas Municipio		Unclassifiable/Attainment.
Ponce Municipio		Unclassifiable/Attainment.
Quebradillas Municipio		Unclassifiable/Attainment.
Rincón Municipio		Unclassifiable/Attainment.
Río Grande Municipio		Unclassifiable/Attainment.
Sabana Grande Municipio		Unclassifiable/Attainment.
Salinas Municipio		Unclassifiable/Attainment.
San Germán Municipio		Unclassifiable/Attainment.
San Juan Municipio		Unclassifiable/Attainment.
San Lorenzo Municipio		Unclassifiable/Attainment.
San Sebastián Municipio		Unclassifiable/Attainment.
Santa Isabel Municipio		Unclassifiable/Attainment.
Toa Alta Municipio		Unclassifiable/Attainment.
Toa Baja County		Unclassifiable/Attainment.
Trujillo Alto Municipio		Unclassifiable/Attainment.
Utuado Municipio		Unclassifiable/Attainment.
Vega Alta Municipio		Unclassifiable/Attainment.
Vega Baja Municipio		Unclassifiable/Attainment.
Vieques Municipio		Unclassifiable/Attainment.
Villalba Municipio		Unclassifiable/Attainment.
Yabucoa Municipio		Unclassifiable/Attainment.

Puerto Rico—$PM_{2.5}$ (Annual NAAQS)

Designated area	Designation [a]	
	Date [1]	Type
Yauco Municipio	.....	Unclassifiable/Attainment.

[a] Includes Indian Country located in each county or area, except as otherwise specified.
[1] This date is 90 days after January 5, 2005, unless otherwise noted.

Puerto Rico—$PM_{2.5}$ [24-hour NAAQS]

Designated area	Designation for the 1997 NAAQS [a]		Designation for the 2006 NAAQS [a]	
	Date [1]	Type	Date [2]	Type
Territory wide:				
Adjuntas Municipio	.....	Unclassifiable/Attainment	.....	Unclassifiable/Attainment.
Aguada Municipio	.....	Unclassifiable/Attainment	.....	Unclassifiable/Attainment.
Aguadilla Municipio	.....	Unclassifiable/Attainment	.....	Unclassifiable/Attainment.
Aguas Buenas Municipio	.....	Unclassifiable/Attainment	.....	Unclassifiable/Attainment.
Aibonito Municipio	.....	Unclassifiable/Attainment	.....	Unclassifiable/Attainment.
Añasco Municipio	.....	Unclassifiable/Attainment	.....	Unclassifiable/Attainment.
Arecibo Municipio	.....	Unclassifiable/Attainment	.....	Unclassifiable/Attainment.
Arroyo Municipio	.....	Unclassifiable/Attainment	.....	Unclassifiable/Attainment.
Barceloneta Municipio	.....	Unclassifiable/Attainment	.....	Unclassifiable/Attainment.
Barranquitas Municipio	.....	Unclassifiable/Attainment	.....	Unclassifiable/Attainment.
Bayamón County	.....	Unclassifiable/Attainment	.....	Unclassifiable/Attainment.
Cabo Rojo Municipio	.....	Unclassifiable/Attainment	.....	Unclassifiable/Attainment.
Caguas Municipio	.....	Unclassifiable/Attainment	.....	Unclassifiable/Attainment.
Camuy Municipio	.....	Unclassifiable/Attainment	.....	Unclassifiable/Attainment.
Canóvanas Municipio	.....	Unclassifiable/Attainment	.....	Unclassifiable/Attainment.
Carolina Municipio	.....	Unclassifiable/Attainment	.....	Unclassifiable/Attainment.
Cataño County	.....	Unclassifiable/Attainment	.....	Unclassifiable/Attainment.
Cayey Municipio	.....	Unclassifiable/Attainment	.....	Unclassifiable/Attainment.
Ceiba Municipio	.....	Unclassifiable/Attainment	.....	Unclassifiable/Attainment.
Ciales Municipio	.....	Unclassifiable/Attainment	.....	Unclassifiable/Attainment.
Cidra Municipio	.....	Unclassifiable/Attainment	.....	Unclassifiable/Attainment.
Coamo Municipio	.....	Unclassifiable/Attainment	.....	Unclassifiable/Attainment.
Comerío Municipio	.....	Unclassifiable/Attainment	.....	Unclassifiable/Attainment.
Corozal Municipio	.....	Unclassifiable/Attainment	.....	Unclassifiable/Attainment.
Culebra Municipio	.....	Unclassifiable/Attainment	.....	Unclassifiable/Attainment.
Dorado Municipio	.....	Unclassifiable/Attainment	.....	Unclassifiable/Attainment.
Fajardo Municipio	.....	Unclassifiable/Attainment	.....	Unclassifiable/Attainment.
Florida Municipio	.....	Unclassifiable/Attainment	.....	Unclassifiable/Attainment.
Guánica Municipio	.....	Unclassifiable/Attainment	.....	Unclassifiable/Attainment.
Guayama Municipio	.....	Unclassifiable/Attainment	.....	Unclassifiable/Attainment.

Puerto Rico—$PM_{2.5}$ [24-hour NAAQS]

Designated area	Designation for the 1997 NAAQS [a]		Designation for the 2006 NAAQS [a]	
	Date [1]	Type	Date [2]	Type
Guayanilla Municipio		Unclassifiable/Attainment		Unclassifiable/Attainment.
Guaynabo County		Unclassifiable/Attainment		Unclassifiable/Attainment.
Gurabo Municipio		Unclassifiable/Attainment		Unclassifiable/Attainment.
Hatillo Municipio		Unclassifiable/Attainment		Unclassifiable/Attainment.
Hormigueros Municipio	Unclassifiable/Attainment	Unclassifiable/Attainment..		
Humacao Municipio	Unclassifiable/Attainment	Unclassifiable/Attainment..		
Isabela Municipio	Unclassifiable/Attainment	Unclassifiable/Attainment..		
Jayuya Municipio	Unclassifiable/Attainment	Unclassifiable/Attainment..		
Juana Díaz Municipio	Unclassifiable/Attainment	Unclassifiable/Attainment..		
Juncos Municipio	Unclassifiable/Attainment	Unclassifiable/Attainment..		
Lajas Municipio	Unclassifiable/Attainment	Unclassifiable/Attainment..		
Lares Municipio	Unclassifiable/Attainment	Unclassifiable/Attainment..		
Las Marías Municipio	Unclassifiable/Attainment	Unclassifiable/Attainment..		
Las Piedras Municipio	Unclassifiable/Attainment	Unclassifiable/Attainment..		
Loíza Municipio	Unclassifiable/Attainment	Unclassifiable/Attainment..		
Luquillo Municipio	Unclassifiable/Attainment	Unclassifiable/Attainment..		
Manatí Municipio	Unclassifiable/Attainment	Unclassifiable/Attainment..		
Maricao Municipio	Unclassifiable/Attainment	Unclassifiable/Attainment..		
Maunabo Municipio	Unclassifiable/Attainment	Unclassifiable/Attainment..		
Mayagnez Municipio	Unclassifiable/Attainment	Unclassifiable/Attainment..		
Moca Municipio	Unclassifiable/Attainment	Unclassifiable/Attainment..		
Morovis Municipio	Unclassifiable/Attainment	Unclassifiable/Attainment..		
Naguabo Municipio	Unclassifiable/Attainment	Unclassifiable/Attainment..		
Naranjito Municipio	Unclassifiable/Attainment	Unclassifiable/Attainment..		
Orocovis Municipio	Unclassifiable/Attainment	Unclassifiable/Attainment..		
Patillas Municipio	Unclassifiable/Attainment	Unclassifiable/Attainment..		
Peñuelas Municipio	Unclassifiable/Attainment	Unclassifiable/Attainment..		
Ponce Municipio	Unclassifiable/Attainment	Unclassifiable/Attainment..		
Quebradillas Municipio	Unclassifiable/Attainment	Unclassifiable/Attainment..		
Rincón Municipio	Unclassifiable/Attainment	Unclassifiable/Attainment..		
Río Grande Municipio	Unclassifiable/Attainment	Unclassifiable/Attainment..		
Sabana Grande Municipio	Unclassifiable/Attainment	Unclassifiable/Attainment..		
Salinas Municipio	Unclassifiable/Attainment	Unclassifiable/Attainment..		
San Germán Municipio	Unclassifiable/Attainment	Unclassifiable/Attainment..		
San Juan Municipio	Unclassifiable/Attainment	Unclassifiable/Attainment..		

Puerto Rico—$PM_{2.5}$ [24-hour NAAQS]

Designated area	Designation for the 1997 NAAQS [a]		Designation for the 2006 NAAQS [a]	
	Date [1]	Type	Date [2]	Type
San Lorenzo Municipio	Unclassifiable/Attainment	Unclassifiable/Attainment..		
San Sebastián Municipio	Unclassifiable/Attainment	Unclassifiable/Attainment..		
Santa Isabel Municipio	Unclassifiable/Attainment	Unclassifiable/Attainment..		
Toa Alta Municipio	Unclassifiable/Attainment	Unclassifiable/Attainment..		
Toa Baja County	Unclassifiable/Attainment	Unclassifiable/Attainment..		
Trujillo Alto Municipio	Unclassifiable/Attainment	Unclassifiable/Attainment..		
Utuado Municipio	Unclassifiable/Attainment	Unclassifiable/Attainment..		
Vega Alta Municipio	Unclassifiable/Attainment	Unclassifiable/Attainment..		
Vega Baja Municipio	Unclassifiable/Attainment	Unclassifiable/Attainment..		
Vieques Municipio	Unclassifiable/Attainment	Unclassifiable/Attainment..		
Villalba Municipio	Unclassifiable/Attainment	Unclassifiable/Attainment..		
Yabucoa Municipio	Unclassifiable/Attainment	Unclassifiable/Attainment..		
Yauco Municipio	Unclassifiable/Attainment	Unclassifiable/Attainment..		

[a] Includes Indian Country located in each county or area, except as otherwise specified.
[1] This date is 90 days after January 5, 2005, unless otherwise noted.
[2] This date is 30 days after November 13, 2009, unless otherwise noted.

Puerto Rico—2008 Lead NAAQS

Designated area	Designation for the 2008 NAAQS [a]	
	Date [1]	Type
Arecibo, PR:		
Arecibo Municipio (part)		Nonattainment.
Area bounded by 4 km from the boundaries of the Battery Recycling Company facility.		
Rest of State		Unclassifiable/Attainment.

[a] Includes Indian Country located in each county or area, except as otherwise specified.
[1] December 31, 2011 unless otherwise noted.

[44 FR 5131, Jan. 25, 1979, as amended at 47 FR 31878, July 23, 1982; 48 FR 41409, Sept. 15, 1983; 52 FR 7866, Mar. 13, 1987; 56 FR 56855, Nov. 6, 1991; 57 FR 56779, Nov. 30, 1992; 60 FR 55798, Nov. 3, 1995; 61 FR 2941, Jan. 30, 1996; 63 FR 31095, June 5, 1998; 65 FR 45273, July 20, 2000; 69 FR 23950, Apr. 30, 2004; 70 FR 1018, Jan. 5, 2005; 70 FR 44478, Aug. 3, 2005; 74 FR 58779, Nov. 13, 2009; 75 FR 1546, Jan. 12, 2010; 76 FR 72119, Nov. 22, 2011; 77 FR 9586, Feb. 17, 2012]

EFFECTIVE DATE NOTE: At 77 FR 30159, May 21, 2012, § 81.355 was amended by revising the table heading for ''Puerto Rico—Ozone (8-Hour Standard)'' to read ''Puerto Rico—1997 8-Hour Ozone NAAQS (Primary and Secondary)''; by adding a new table entitled ''Puerto Rico—2008 8-Hour Ozone NAAQS (Primary and Secondary)'' following the newly designated table ''Puerto Rico—1997 8-Hour Ozone NAAQS (Primary and Secondary)'', effective July 20, 2012. For the convenience of the user, the added text is set forth as follows:

§ 81.355 Puerto Rico.

* * * * *

Puerto Rico—2008 8-Hour Ozone NAAQS (Primary and secondary)

Designated area [1]	Designation		Classification	
	Date [2]	Type	Date [2]	Type
All of Puerto Rico AQCR 244		Unclassifiable/Attainment		

[1] Includes any Indian country in each county or area, unless otherwise specified.

[2] This date is July 20, 2012, unless otherwise noted.

* * * * *

§ 81.356 Virgin Islands.

Virgin Islands—SO_2

Designated area	Does not meet primary standards	Does not meet secondary standards	Cannot be classified	Better than national standards
Virgin Islands AQCR:				
St. Croix (southern)			[1] X	
Remainder of AQCR				X

[1] EPA designation replaces State designation.

Virgin Islands—Carbon Monoxide

Designated Area	Designation		Classification	
	Date [1]	Type	Date [1]	Type
Statewide St. Croix St. John St. Thomas		Unclassifiable/Attainment		

[1] This date is November 15, 1990, unless otherwise noted.

Virgin Islands—Ozone (1-Hour Standard)[2]

Designated area	Designation		Classification	
	Date [1]	Type	Date [1]	Type
Statewide St. Croix St. John St. Thomas		Unclassifiable/Attainment		

[1] This date is October 18, 2000, unless otherwise noted.
[2] The 1-hour ozone standard is revoked effective June 15, 2005 for all areas in the Virgin Islands.

Virgin Islands—NO_2 (1971 Annual Standard)

Designated area	Does not meet primary standards	Cannot be classified or better than national standards
Virgin Islands AQCR		X

Virgin Islands—NO_2 (2010 1-Hour Standard)

Designated area	Designation [a]	
	Date [1]	Type
State of Virgin Islands		Unclassifiable/Attainment.

[a] Includes Indian Country located in each county or area, except as otherwise specified.
[1] This date is 90 days after October 31, 2011, unless otherwise noted.

Virgin Islands—Ozone (8-Hour Standard)

Designated area	Designation		Category/classification	
	Date [1]	Type	Date [1]	Type
Statewide St. Croix St. John St. Thomas		Unclassifiable/Attainment		

[1] This date is June 15, 2004, unless otherwise noted.

Virgin Islands—$PM_{2.5}$ (Annual NAAQS)

Designated area	Designation [a]	
	Date [1]	Type
Statewide:		
St. Croix	.....	Unclassifiable/Attainment.
St. John	.....	Unclassifiable/Attainment.
St. Thomas	.....	Unclassifiable/Attainment.

[a] Includes Indian Country located in each county or area, except as otherwise specified.
[1] This date is 90 days after January 5, 2005, unless otherwise noted.

Virgin Islands—$PM_{2.5}$ [24-hour NAAQS]

Designated area	Designation for the 1997 NAAQS [a]		Designation for the 2006 NAAQS [a]	
	Date [1]	Type	Date [2]	Type
Territory wide:				
St. Croix	Unclassifiable/Attainment	Unclassifiable/Attainment		
St. John	Unclassifiable/Attainment	Unclassifiable/Attainment		
St. Thomas	Unclassifiable/Attainment	Unclassifiable/Attainment		

[a] Includes Indian Country located in each county or area, except as otherwise specified.
[1] This date is 90 days after November 13, 2009, unless otherwise noted.
[2] This date is 30 days after November 13, 2009, unless otherwise noted.

Virgin Islands—2008 Lead NAAQS

Designated area	Designation for the 2008 NAAQS [a]	
	Date [1]	Type
Whole State	.....	Unclassifiable/Attainment.

[a] Includes Indian Country located in each county or area, except as otherwise specified.
[1] December 31, 2011 unless otherwise noted.

[44 FR 5133, Jan. 25, 1979, as amended at 47 FR 31878, July 23, 1982; 56 FR 56858, Nov. 6, 1991; 61 FR 2941, Jan. 30, 1996; 63 FR 31096, June 5, 1998; 65 FR 45274, July 20, 2000; 69 FR 23951, Apr. 30, 2004; 70 FR 1019, Jan. 5, 2005; 70 FR 44478, Aug. 3, 2005; 74 FR 58781, Nov. 13, 2009; 76 FR 72120, Nov. 22, 2011; 77 FR 9588, Feb. 17, 2012]

EFFECTIVE DATE NOTE: At 77 FR 30160, May 21, 2012, § 81.356 was amended by revising the table heading for ''Virgin Islands—Ozone (8-Hour Standard)'' to read ''Virgin Islands—1997 8-Hour Ozone NAAQS (Primary and Secondary)''; by adding a new table entitled ''Virgin Islands—2008 8-Hour Ozone NAAQS (Primary and Secondary)'' following the newly designated table ''Virgin Islands—1997 8-Hour Ozone NAAQS (Primary and Secondary)'', effective July 20, 2012. For the convenience of the user, the added text is set forth as follows:

§ 81.356 Virgin Islands.

* * * * *

Virgin Islands—2008 8-Hour Ozone NAAQS (Primary and secondary)

Designated area	Designation		Classification	
	Date [1]	Type	Date [1]	Type
All of Virgin Islands AQCR 247: [2]	.....	Unclassifiable/Attainment		

[1] This date is July 20, 2012, unless otherwise noted.
[2] Includes any Indian country in each county or area, unless otherwise specified.

* * * * *

Subpart D—Identification of Mandatory Class I Federal Areas Where Visibility Is an Important Value

AUTHORITY: Secs. 101(b)(1), 110, 169A(a)(2), and 301(a), Clean Air Act as amended (42 U.S.C. 7401(b), 7410, 7491(a)(2), 7601(a)).

SOURCE: 44 FR 69124, Nov. 30, 1979, unless otherwise noted.

§ 81.400 Scope.

Subpart D, §§ 81.401 through 81.437, lists those mandatory Federal Class I areas, established under the Clean Air Act Amendments of 1977, where the Administrator, in consultation with the Secretary of the Interior, has determined visibility to be an important value. The following listing of areas where visibility is an important value represents an evaluation of all international parks (IP), national wilderness areas (Wild) exceeding 5,000 acres, national memorial parks (NMP) exceeding 5,000 acres, and national parks (NP) exceeding 6,000 acres, in existence on August 7, 1977. Consultation by EPA with the Federal Land Managers involved: The Department of Interior (USDI), National Park Service (NPS), and Fish and Wildlife Service (FWS); and the Department of Agriculture (USDA), Forest Service (FS).

§ 81.401 Alabama.

Area name	Acreage	Public Law establishing	Federal land manager
Sipsey Wild	12,646	93–622	USDA-FS

§ 81.402 Alaska.

Area name	Acreage	Public Law establishing	Federal land manager
Bering Sea Wild	41,113	91–622	USDI-FWS
Mount McKinley NP	1,949,493	64–353	USDI-NPS
Simeonof Wild	25,141	94–557	USDI-FWS
Tuxedni Wild	6,402	91–504	USDI-FWS

§ 81.403 Arizona.

Area name	Acreage	Public Law establishing	Federal land manager
Chiricahua National Monument Wild.	9,440	94–567	USDI-NPS
Chiricahua Wild	18,000	88–577	USDA-FS
Galiuro Wild	52,717	88–577	USDA-FS
Grand Canyon NP	1,176,913	65–277	USDI-NPS
Mazatzal Wild	205,137	88–577	USDA-FS
Mount Baldy Wild	6,975	91–504	USDA-FS
Petrified Forest NP	93,493	85–358	USDI-NPS
Pine Mountain Wild	20,061	92–230	USDA-FS
Saguaro Wild	71,400	94–567	USDI-FS
Sierra Ancha Wild	20,850	88–577	USDA-FS
Superstition Wild	124,117	88–577	USDA-FS
Sycamore Canyon Wild.	47,757	92–241	USDA-FS

§ 81.404 Arkansas.

Area name	Acreage	Public Law establishing	Federal land manager
Caney Creek Wild	14,344	93–622	USDA-FS
Upper Buffalo Wild	9,912	93–622	USDA-FS

§ 81.405 California.

Area name	Acreage	Public Law establishing	Federal land manager
Agua Tibia Wild	15,934	93–632	USDA-FS
Caribou Wild	19,080	88–577	USDA-FS
Cucamonga Wild	9,022	88–577	USDA-FS
Desolation Wild	63,469	91–82	USDA-FS
Dome Land Wild	62,206	88–577	USDA-FS
Emigrant Wild	104,311	93–632	USDA-FS
Hoover Wild	47,916	88–577	USDY-FS
John Muir Wild	484,673	8–577	USDA-FS
Joshua Tree Wild	429,690	94–567	USDI-NPS
Kaiser Wild	22,500	94–577	USDA-FS
Kings Canyon NP	459,994	76–424	USDI-NPS
Lassen Volcanic NP	105,800	64–184	USDI-NPS
Lava Beds Wild	28,640	92–493	USDI-NPS
Marble Mountain Wild.	213,743	88–577	USDA-FS
Minarets Wild	109,484	88–577	USDA-FS
Mokelumme Wild	50,400	88–577	USDA-FS
Pinnacles Wild	12,952	94–567	USDI-NPS
Point Reyes Wild	25,370	94–544, 94–567	USDI-NPS
Redwood NP	27,792	90–545	USDI-NPS
San Gabriel Wild	36,137	90–318	USDA-FS
San Gorgonio Wild	34,644	88–577	USDA-FS
San Jacinto Wild	20,564	88–577	USDA-FS
San Rafael Wild	142,722	90–271	USDA-FS
Sequoia NP	386,642	([1])	USDI-NPS
South Warner Wild	68,507	88–577	USDA-FS
Thousand Lakes Wild.	15,695	88–577	USDA-FS
Ventana Wild	95,152	91–58	USDA-FS
Yolla-Bolly-Middle-Eel Wild.	109,091	88–577	USDA-FS
Yosemite NP	759,172	58–49	USDI-NPS

[1] 26 Stat. 478 (51st Cong.)

§ 81.406 Colorado.

Area name	Acreage	Public Law establishing	Federal land manager
Black Canyon of the Gunnison Wild.	11,180	94–567	USDI-NPS
Eagles Nest Wild	133,910	94–352	USDA-FS
Flat Tops Wild	235,230	94–146	USDA-FS

Area name	Acreage	Public Law establishing	Federal land manager
Great Sand Dunes Wild.	33,450	94–567	USDI-NPS
La Garita Wild	48,486	88–577	USDA-FS
Maroon Bells-Snowmass Wild.	71,060	88–577	USDA-FS
Mesa Verde NP	51,488	59–353	USDI-NPS
Mount Zirkel Wild	72,472	88–577	USDA-FS
Rawah Wild	26,674	88–577	USDA-FS
Rocky Mountain NP	263,138	63–238	USDI-NPS
Weminuche Wild	400,907	93–632	USDA-FS
West Elk Wild	61,412	88–577	USDA-FS

§ 81.407 Florida.

Area name	Acreage	Public Law establishing	Federal land manager
Chassahowitzka Wild.	23,360	94–557	USDI-FWS
Everglades NP	1,397,429	73–267	USDI-NPS
St. Marks Wild	17,745	93–632	USDI-FWS

§ 81.408 Georgia.

Area name	Acreage	Public Law establishing	Federal land manager
Cohotta Wild	33,776	93–622	USDA-FS
Okefenokee Wild	343,850	93–429	USDI-FWS
Wolf Island Wild	5,126	93–632	USDI-FWS

§ 81.409 Hawaii.

Area name	Acreage	Public Law establishing	Federal land manager
Haleakala NP	27,208	87–744	USDI-NPS
Hawaii Volcanoes	217,029	64–171	USDI-NPS

§ 81.410 Idaho.

Area name	Acreage	Public Law establishing	Federal land manager
Craters of the Moon Wild.	43,243	91–504	USDI-NPS
Hells Canyon Wild [1]	83,800	94–199	USDA-FS
Sawtooth Wild	216,383	92–400	USDA-FS
Selway-Bitterroot Wild [2].	988,770	88–577	USDA-FS
Yellowstone NP [3]	31,488	([4])	USDI-NPS

[1] Hells Canyon Wilderness, 192,700 acres overall, of which 108,900 acres are in Oregon and 83,800 acres are in Idaho.

[2] Selway Bitterroot Wilderness, 1,240,700 acres overall, of which 988,700 acres are in Idaho and 251,930 acres are in Montana.

[3] Yellowstone National Park, 2,219,737 acres overall, of which 2,020,625 acres are in Wyoming, 167,624 acres are in Montana, and 31,488 acres are in Idaho.

[4] 17 Stat. 32 (42nd Cong.).

§ 81.411 Kentucky.

Area name	Acreage	Public Law establishing	Federal land manager
Mammoth Cave NP	51,303	69–283	USDI-NPS

§ 81.412 Louisiana.

Area name	Acreage	Public Law establishing	Federal land manager
Breton Wild	5,000+	93–632	USDI-FWS

§ 81.413 Maine.

Area name	Acreage	Public Law establishing	Federal land manager
Acadia NP	37,503	65–278	USDI-NPS
Moosehorn Wild	7,501	.....	USDI-FWS
(Edmunds Unit)	(2,782)	91–504	
(Baring Unit)	(4,719)	93–632	

§ 81.414 Michigan.

Area name	Acreage	Public Law establishing	Federal land manager
Isle Royale NP	542,428	71–835	USDI-NPS
Seney Wild	25,150	91–504	USDI-FWS

§ 81.415 Minnesota.

Area name	Acreage	Public Law establishing	Federal land manager
Boundary Waters Canoe Area Wild.	747,840	99–577	USDA-FS
Voyageurs NP	114,964	99–261	USDI-NPS

§ 81.416 Missouri.

Area name	Acreage	Public Law establishing	Federal land manager
Hercules-Glades Wild.	12,315	94–557	USDA-FS
Mingo Wild	8,000	94–557	USDI-FWS

§ 81.417 Montana.

Area name	Acreage	Public Law establishing	Federal land manager
Anaconda-Pintlar Wild.	157,803	88–577	USDA-FS
Bob Marshall Wild	950,000	88–577	USDA-FS
Cabinet Mountains Wild.	94,272	88–577	USDA-FS
Gates of the Mtn Wild.	28,562	88–577	USDA-FS
Glacier NP	1,012,599	61–171	USDI-NPS
Medicine Lake Wild	11,366	94–557	USDI-FWS
Mission Mountain Wild.	73,877	93–632	USDA-FS

Area name	Acreage	Public Law establishing	Federal land manager
Red Rock Lakes Wild.	32,350	94–557	USDI-FWS
Scapegoat Wild	239,295	92–395	USDA-FS
Selway-Bitterroot Wild [1].	251,930	88–577	USDA-FS
U. L. Bend Wild	20,890	94–557	USDI-FWS
Yellowstone NP [2]	167,624	([3])	USDI-NPS

[1] Selway-Bitterroot Wilderness, 1,240,700 acres overall, of which 988,770 acres are in Idaho and 251,930 acres are in Montana.
[2] Yellowstone National Park, 2,219,737 acres overall, of which 2,020,625 acres are in Wyoming, 167,624 acres are in Montana, and 31,488 acres are in Idaho.
[3] 17 Stat. 32 (42nd Cong.)

[44 FR 69124, Nov. 30, 1979; 45 FR 6103, Jan. 25, 1980]

§ 81.418 Nevada.

Area name	Acreage	Public Law establishing	Federal land manager
Jarbidge Wild	64,667	88–577	USDA-FS

§ 81.419 New Hampshire.

Area name	Acreage	Public Law establishing	Federal land manager
Great Gulf Wild	5,552	88–577	USDA-FS
Presidential Range-Dry River Wild.	20,000	93–622	USDA-FS

§ 81.420 New Jersey.

Area name	Acreage	Public Law establishing	Federal land manager
Brigantine Wild	6,603	93–632	USDI-FWS

§ 81.421 New Mexico.

Area name	Acreage	Public Law establishing	Federal land manager
Bandelier Wild	23,267	94–567	USDI-NPS
Bosque del Apache Wild.	80,850	93–632	USDI-FWS
Carlsbad Caverns NP.	46,435	71–216	USDI-NPS
Gila Wild	433,690	88–577	USDA-FS
Pecos Wild	167,416	88–577	USDA-FS
Salt Creek Wild	8,500	91–504	USDI-FWS
San Pedro Parks Wild.	41,132	88–577	USDA-FS
Wheeler Peak Wild	6,027	88–577	USDA-FS
White Mountain Wild.	31,171	88–577	USDA-FS

§ 81.422 North Carolina.

Area name	Acreage	Public Law establishing	Federal land manager
Great Smoky Mountains NP [1].	273,551	69–268	USDI-NPS
Joyce Kilmer-Slickrock Wild [2].	10,201	93–622	USDA-FS
Linville Gorge Wild	7,575	88–577	USDA-FS
Shining Rock Wild ..	13,350	88–577	USDA-FS
Swanguarter Wild ...	9,000	94–557	USDI-FWS

[1] Great Smoky Mountains National Park, 514,758 acres overall, of which 273,551 acres are in North Carolina, and 241,207 acres are in Tennessee.
[2] Joyce Kilmer-Slickrock Wilderness, 14,033 acres overall, of which 10,201 acres are in North Carolina, and 3,832 acres are in Tennessee.

§ 81.423 North Dakota.

Area name	Acreage	Public Law establishing	Federal land manager
Lostwood Wild	5,557	93–632	USDI-FWS.
Theodore Roosevelt, NP.	69,675	80–38	USDI-NPS.

[54 FR 41098, Oct. 5, 1989]

§ 81.424 Oklahoma.

Area name	Acreage	Public Law establishing	Federal land manager
Wichita Mountains Wild.	8,900	91–504	USDI-FWS

§ 81.425 Oregon.

Area name	Acreage	Public Law establishing	Federal land manager
Crater Lake NP	160,290	57–121	USDA-NPS
Diamond Peak Wild	36,637	88–577	USDA-FS
Eagle Cap Wild	293,476	88–577	USDA-FS
Gearhart Mountain Wild.	18,709	88–577	USDA-FS
Hells Canyon Wild [1]	108,900	94–199	USDA-FS
Kalmiopsis Wild	76,900	88–577	USDA-FS
Mountain Lakes Wild.	23,071	88–577	USDA-FS
Mount Hood Wild	14,160	88–577	USDA-FS
Mount Jefferson Wild.	100,208	90–548	USDA-FS
Mount Washington Wild.	46,116	88–577	USDA-FS
Strawberry Mountain Wild.	33,003	88–577	USDA-FS
Three Sisters Wild ..	199,902	88–577	USDA-FS

[1] Hells Canyon Wilderness, 192,700 acres overall, of which 108,900 acres are in Oregon, and 83,800 acres are in Idaho.

§ 81.426 South Carolina.

Area name	Acreage	Public Law establishing	Federal land manager
Cape Romain Wild	28,000	93–632	USDI-FWS

§ 81.427 South Dakota.

Area name	Acreage	Public Law establishing	Federal land manager
Badlands Wild	64,250	94–567	USDI-NPS
Wind Cave NP	28,060	57–16	USDI-NPS

§ 81.428 Tennessee.

Area name	Acreage	Public Law establishing	Federal land manager
Great Smoky Mountains NP [1].	241,207	69–268	USDI-NPS
Joyce Kilmer-Slickrock Wild [2].	3,832	93–622	USDA-FS

[1] Great Smoky Mountains National Park, 514,758 acres overall, of which 273,551 acres are in North Carolina, and 241,207 acres are in Tennessee.

[2] Joyce Kilmer Slickrock Wilderness, 14,033 acres overall, of which 10,201 acres are in North Carolina, and 3,832 acres are in Tennessee.

[44 FR 69124, Nov. 30, 1979; 45 FR 6103, Jan. 25, 1980]

§ 81.429 Texas.

Area name	Acreage	Public Law establishing	Federal land manager
Big Bend NP	708,118	74–157	USDI-NPS
Guadalupe Mountains NP.	76,292	89–667	USDI-NPS

§ 81.430 Utah.

Area name	Acreage	Public Law establishing	Federal land manager
Arches NP	65,098	92–155	USDI-NPS
Bryce Canyon NP	35,832	68–277	USDI-NPS
Canyonlands NP	337,570	88–590	USDI-NPS
Capitol Reef NP	221,896	92–507	USDI-NPS
Zion NP	142,462	68–83	USDI-NPS

§ 81.431 Vermont.

Area name	Acreage	Public Law establishing	Federal land manager
Lye Brook Wild	12,430	93–622	USDA-FS

§ 81.432 Virgin Islands.

Area name	Acreage	Public Law establishing	Federal land manager
Virgin Islands NP	12,295	84–925	USDI-NPS

§ 81.433 Virginia.

Area name	Acreage	Public Law establishing	Federal land manager
James River Face Wild.	8,703	93–622	USDA-FS
Shenandoah NP	190,535	69–268	USDI-NPS

§ 81.434 Washington.

Area name	Acreage	Public Law establishing	Federal land manager
Alpine Lakes Wild	303,508	94–357	USDA-FS
Glacier Peak Wild	464,258	88–577	USDA-FS
Goat Rocks Wild	82,680	88–577	USDA-FS
Mount Adams Wild	32,356	88–577	USDA-FS
Mount Rainer NP	235,239	([1])	USDI-NPS
North Cascades NP	503,277	90–554	USDI-NPS
Olympic NP	892,578	75–778	USDI-NPS
Pasayten Wild	505,524	90–544	USDA-FS

[1] 30 Stat. 993 (55th Cong.).

§ 81.435 West Virginia.

Area name	Acreage	Public Law establishing	Federal land manager
Dolly Sods Wild	10,215	93–622	USDA-FS
Otter Creek Wild	20,000	93–622	USDA-FS

§ 81.436 Wyoming.

Area name	Acreage	Public Law establishing	Federal land manager
Bridger Wild	392,160	88–577	USDA-FS
Fitzpatrick Wild	191,103	94–567	USDA-FS
Grand Teton NP	305,504	81–787	USDI-NPS
North Absaroka Wild.	351,104	88–577	USDA-FS
Teton Wild	557,311	88–577	USDA-FS
Washakie Wild	686,584	92–476	USDA-FS
Yellowstone NP [1]	2,020,625	([2])	USDI-NPS

[1] Yellowstone National Park, 2,219,737 acres overall, of which 2,020,625 acres are in Wyoming, 167,624 acres are in Montana, and 31,488 acres are in Idaho.

[2] 17 Stat. 32 (42nd Cong.).

§ 81.437 New Brunswick, Canada.

TABLE 1

Area name	Acreage	Public law establishing	Federal land manager
Roosevelt Campobello International Park.	2,721	88–363	([1])

[1] Chairman, RCIP Commission.

TABLE 2—INTEGRAL VISTAS ASSOCIATED WITH MANDATORY CLASS I AREAS

Park	Observation point	View angle	Key features	Also viewed from—
Roosevelt Campobello International Park	Roosevelt Cottage and Beach Area.	244°–56°	Estes head* Eastport* North Lubec* Cobscook Bay* Shackford Head* St. Andrews* Friar's Head* Treat's Island* Passamaquoddy Bay* Deer Island* Indian Island* Rouen Island* Cherry Island* Thrumcap Island* Owen House* Welshpool*	*Features viewed from Friar's Head.
	Friar's Head	154°–94°	Roosevelt Cottage* Campobello Island* Weir* Friar's Bay* Welshpool* Wilson's Beach* North Road* Head Harbour Passage* Casco Island* Green Island* Pope Island* Thrumcap Island* Cherry Island* Rouen Island* Indian Island* Deer Island* Passamaquoddy Bay* Old Sow Whirlpool* St. Andrews* Eastport* Friar Roads* Estes Head* Perry* Shackford Head* Pembroke* Cobscook Bay* Treat's Island* Major's Island North Lubec* Passamaquoddy Dam, portion of* Roger's Island Dudley Island* Johnson's Bay* Pope's Folly* Cutler Naval Radio Station Lubec Mulholland Point Lighthouse FDR Memorial Bridge South Lubec Grand Manan Island*	*Features viewed from Roosevelt Cottage and Beach Area.

TABLE 2—INTEGRAL VISTAS ASSOCIATED WITH MANDATORY CLASS I AREAS—Continued

Park	Observation point	View angle	Key features	Also viewed from—
	Con Robinson's Point.	308°–150°	Herring Cove Beach. Provincial Park Eastern Head Herring Cove Mainland New Brunswick* Point La Preau* Wolf Islands* Atlantic Ocean* Grand Manan Island	*Features viewed from Liberty Point.*
	Liberty Point	34°–236°	Ragged Point Mainland New Brunswick* Atlantic Ocean* Wolf Islands* Grand Manan Island* Sail Rock West Quoddy Head Lighthouse South Lubec	*Features viewed from Con Robinson's Points.

[54 FR 21906, May 19, 1989]

APPENDIX A TO PART 81—AIR QUALITY CONTROL REGIONS (AQCR'S)

	AQCR No.
Alabama:	
Alabama and Tombigbee Rivers	1
Columbus-Phenix City	2
East Alabama	3
Metropolitan Birmingham	4
Mobile-Pensacola-Panama City-Southern Mississippi (Fla., Miss.)	5
Southeast Alabama	6
Tennessee River Valley-Cumberland Mountains (Tenn.)	7
Alaska:	
Cook Inlet	8
Northern Alaska	9
South Central Alaska	10
Southeastern Alaska	11
Arizona:	
Arizona-New Mexico Southern Border (N. Mex.)	12
Clark-Mohave	13
Four Corners (Colo., N. Mex., Utah)	14
Phoenix-Tucson	15
Arkansas:	
Central Arkansas	16
Metropolitan Fort Smith	17
Metropolitan Memphis	18
Monroe-El Dorado (La.)	19
Northeast Arkansas	20
Northwest Arkansas	21
Shreveport-Texarkana-Tyler (La., Okla., Texas)	22
California:	
Great Basin Valley	23
Metropolitan Los Angeles	24
North Central Coast	25
North Coast	26
Northeast Plateau	27
Sacramento Valley	28
San Diego	29
San Francisco Bay Area	30
San Joaquin Valley	31
South Central Coast	32
Southeast Desert	33
Colorado:	
Comanche	34
Four Corners (Ariz., N. Mex., Utah)	14
Grand Mesa	35
Metropolitan Denver	36
Pawnee	37
San Isabel	38
San Luis	39
Yampa	40
Connecticut:	
Eastern Connecticut	41
Hartford-New Haven-Springfield (Mass.)	42
New Jersey-New York-Connecticut (N.J., N.Y.)	43
Northwestern Connecticut	44
Delaware:	
Metropolitan Philadelphia (N.J., Pa.)	45
Southern Delaware	46
District of Columbia:	
National Capital (Md.)	47
Florida:	
Central Florida	48
Jacksonville-Brunswick (Ga.)	49
Mobile-Pensacola-Panama City-Southern Mississippi (Ala., Miss.)	5
Southeast Florida	50
Southwest Florida	51
West Central Florida	52
Georgia:	
Augusta-Aiken (S.C.)	53
Central Georgia	54
Chattanooga (Tenn.)	55
Columbus-Phenix City (Ala.)	2
Jacksonville-Brunswick (Fla.)	49
Metropolitan Atlanta	56
Northeast Georgia	57
Savannah-Beaufort (S.C.)	58
Southwest Georgia	59
Hawaii:	
Entire State	60
Idaho:	
Eastern Idaho	61

	AQCR No.
Eastern Washington-Northern Idaho (Wash.)	62
Idaho	63
Metropolitan Boise	64
Illinois:	
Burlington-Keokuk (Iowa)	65
East Central Illinois	66
Metropolitan Chicago (Ind.)	67
Metropolitan Dubuque (Iowa, Wis.)	68
Metropolitan Quad Cities (Iowa)	69
Metropolitan St. Louis (Mo.)	70
North Central Illinois	71
Paducah-Cairo (Ky.)	72
Rockford-Janesville-Beloit (Wis.)	73
Southeast Illinois	74
West Central Illinois	75
Indiana:	
East Central Indiana	76
Evansville-Owensboro-Henderson (Ky.)	77
Louisville (Ky.)	78
Metropolitan Chicago (Ill.)	67
Metropolitan Cincinnati (Ky., Ohio)	79
Metropolitan Indianapolis	80
Northeast Indiana	81
South Bend-Elkhart-Benton Harbor (Mich.)	82
Southern Indiana	83
Wabash Valley	84
Iowa:	
Burlington-Keokuk (Ill.)	65
Metropolitan Dubuque (Ill., Wis.)	68
Metropolitan Omaha-Council Bluffs (Nebr.)	85
Metropolitan Quad Cities (Ill.)	69
Metropolitan Sioux City (Nebr., S. Dak.)	86
Metropolitan Sioux Falls (S. Dak.)	87
Northeast Iowa	88
North Central Iowa	89
Northwest Iowa	90
Southeast Iowa	91
South Central Iowa	92
Southwest Iowa	93
Kansas:	
Metropolitan Kansas City (Mo.)	94
Northeast Kansas	95
North Central Kansas	96
Northwest Kansas	97
Southeast Kansas	98
South Central Kansas	99
Southwest Kansas	100
Kentucky:	
Appalachian	101
Bluegrass	102
Evansville-Owensboro-Henderson (Ind.)	77
Huntington-Ashland-Portsmouth-Ironton (Ohio, W. Va.)	103
Louisville (Ind.)	78
Metropolitan Cincinnati (Ind., Ohio)	79
North Central Kentucky	104
Paducah-Cairo (Ill.)	72
South Central Kentucky	105
Louisiana:	
Monroe-El Dorado (Ark.)	19
Shreveport-Texarkana-Tyler (Ark., Okla., Tex.)	22
Southern Louisiana-Southeast Texas (Tex.)	106
Maine:	
Androscoggin Valley (N.H.)	107
Aroostook	108
Down East	109
Metropolitan Portland	110
Northwest Maine	111
Maryland:	
Central Maryland	112
Cumberland-Keyser (W. Va.)	113
Eastern Shore	114
Metropolitan Baltimore	115
National Capital (D.C.)	47
Southern Maryland	116
Massachusetts:	
Berkshire	117
Central Massachusetts	118
Hartford-New Haven-Springfield (Conn.)	42
Metropolitan Boston	119
Metropolitan Providence (R.I.)	120
Merrimack Valley-Southern New Hampshire (N.H.)	121
Michigan:	
Central Michigan	122
Metropolitan Detroit-Port Huron	123
Metropolitan Toledo (Ohio)	124
South Bend-Elkhart-Benton Harbor (Ind.)	82
South Central Michigan	125
Upper Michigan	126
Minnesota:	
Central Minnesota	127
Southeast Minnesota-La Crosse (Wis.)	128
Duluth-Superior (Wis.)	129
Metropolitan Fargo-Moorhead (N. Dak.)	130
Minneapolis-St. Paul	131
Northwest Minnesota	132
Southwest Minnesota	133
Mississippi:	
Metropolitan Memphis (Ark., Tenn.)	18
Mississippi Delta	134
Mobile-Pensacola-Panama City-Southern Mississippi (Ala., Fla.)	5
Northeast Mississippi	135
Missouri:	
Metropolitan Kansas City (Kans.)	94
Metropolitan St. Louis (Ill.)	70
Northern Missouri	137
Southeast Missouri	138
Southwest Missouri	139
Montana:	
Billings	140
Great Falls	141
Helena	142
Miles City	143
Missoula	144
Nebraska:	
Lincoln-Beatrice-Fairbury	145
Metropolitan Omaha-Council Bluffs (Iowa)	85
Metropolitan Sioux City (Iowa, S. Dak.)	86
Nebraska	146
Nevada:	
Clark-Mohave (Ariz.)	13
Nevada	147
Northwest Nevada	148
New Hampshire:	
Androscoggin Valley (Maine)	107
Merrimack Valley-Southern New Hampshire (Mass.)	121
New Hampshire	149
New Jersey:	
Metropolitan Philadelphia (Del., Pa.)	45
New Jersey	150
New Jersey-New York-Connecticut (N.Y., Conn.)	43
Northeast Pennsylvania-Upper Delaware Valley (Pa.)	151
New Mexico:	
Albuquerque-Mid Rio Grande	152
Arizona-New Mexico Southern Border (Ariz.)	12
El Paso-Las Cruces-Alamogordo (Tex.)	153
Four Corners (Ariz., Colo., Utah)	14
Northeastern Plains	154
Pecos-Permian Basin	155
Southwestern Mountains-Augustine Plains	156
Upper Rio Grande Valley	157

	AQCR No.
New York:	
Central New York	158
Champlain Valley (Vt.)	159
Genesee-Finger Lakes	160
Hudson Valley	161
New Jersey-New York-Connecticut (N.J., Conn.)	43
Niagara Frontier	162
Southern Tier East	163
Southern Tier West	164
North Carolina:	
Eastern Mountain	165
Eastern Piedmont	166
Metropolitan Charlotte (S.C.)	167
Northern Coastal Plain	168
Northern Piedmont	136
Sandhills	169
Southern Coastal Plain	170
Western Mountain	171
North Dakota:	
Metropolitan Fargo-Moorhead (Minn.)	130
North Dakota	172
Ohio:	
Dayton	173
Greater Metropolitan Cleveland	174
Huntington-Ashland-Portsmouth-Ironton (Ky., W. Va.)	103
Mansfield-Marion	175
Metropolitan Cincinnati (Ind., Ky.)	79
Metropolitan Columbus	176
Metropolitan Toledo (Mich.)	124
Northwest Ohio	177
Northwest Pennsylvania-Youngstown (Pa.)	178
Parkersburg-Marietta (W. Va.)	179
Sandusky	180
Steubenville-Weirton-Wheeling (W. Va.)	181
Wilmington-Chillicothe-Logan	182
Zanesville-Cambridge	183
Oklahoma:	
Central Oklahoma	184
Metropolitan Fort Smith (Ark.)	17
North Central Oklahoma	185
Northeastern Oklahoma	186
Northwestern Oklahoma	187
Shreveport-Texarkana-Tyler (Ark., La., Texas)	22
Southeastern Oklahoma	188
Southwestern Oklahoma	189
Oregon:	
Central Oregon	190
Eastern Oregon	191
Northwest Oregon	192
Portland (Wash.)	193
Southwest Oregon	194
Pennsylvania:	
Central Pennsylvania	195
Metropolitan Philadelphia (Del., N.J.)	45
Northeast Pennsylvania-Upper Delaware Valley (N.J.)	151
Northwest Pennsylvania-Youngstown (Ohio)	178
South Central Pennsylvania	196
Southwest Pennsylvania	197
Rhode Island:	
Metropolitan Providence (Mass.)	120
South Carolina:	
Augusta-Aiken (Ga.)	53
Camden-Sumter	198
Charleston	199
Columbia	200
Florence	201
Greenville-Spartanburg	202
Greenwood	203
Georgetown	204
Metropolitan Charlotte (N.C.)	167
Savannah-Beaufort (Ga.)	58
South Dakota:	
Black Hills-Rapid City	205
Metropolitan Sioux City (Iowa, Neb.)	86
Metropolitan Sioux Falls (Iowa)	87
South Dakota	206
Tennessee:	
Chattanooga (Ga.)	55
Eastern Tennessee-Southwestern Virginia (Va.)	207
Metropolitan Memphis (Ark., Miss.)	18
Middle Tennessee	208
Tennessee River Valley-Cumberland Mountains (Ala.)	7
Western Tennessee	209
Texas:	
Abilene-Wichita Falls	210
Amarillo-Lubbock	211
Austin-Waco	212
Brownsville-Laredo	213
Corpus Christi-Victoria	214
El Paso-Las Cruces-Alamagordo (N. Mex.)	153
Metropolitan Dallas-Ft. Worth	215
Metropolitan Houston-Galveston	216
Metropolitan San Antonio	217
Midland-Odessa-San Angelo	218
Shreveport-Texarkana-Tyler (Ark., La., Okla.)	22
Southern Louisiana-Southeast Texas (La.)	106
Utah:	
Four Corners (Ariz., Colo., N. Mex.)	14
Utah	219
Wasatch Front	220
Vermont:	
Champlain Valley (N.Y.)	159
Vermont	221
Virginia:	
Central Virginia	222
Eastern Tennessee-Southwestern Virginia (Tenn.)	207
Hampton Roads	223
National Capital (D.C., Md.)	47
Northeastern Virginia	224
State Capital	225
Valley of Virginia	226
Washington:	
Eastern Washington-Northern Idaho (Idaho)	62
Northern Washington	227
Olympia-Northwest Washington	228
Portland (Ore.)	193
Puget Sound	229
South Central Washington	230
West Virginia:	
Allegheny	231
Central West Virginia	232
Cumberland-Keyser (Md.)	113
Eastern Panhandle	233
Huntington-Ashland-Portsmouth-Iron- ton (Ky., Ohio)	103
Kanawha Valley	234
North Central West Virginia	235
Parkersburg-Marietta (Ohio)	179
Southern West Virginia	236
Steubenville-Wierton-Wheeling (Ohio)	181
Wisconsin:	
Duluth-Superior (Minn.)	129
Lake Michigan	237
Metropolitan Dubuque (Ill., Iowa)	68
North Central Wisconsin	238
Rockford- Janesville- Beloit (Ill.)	73
Southeastern Wisconsin	239
Southeast Minnesota- La Crosse (Minn.)	128
Southern Wisconsin	240
Wyoming:	
Casper	241

	AQCR No.
Metropolitan Cheyenne	242
Wyoming	243
Puerto Rico:	
Puerto Rico	244
American Samoa:	
American Samoa	245
Guam:	
Guam	246
U.S. Virgin Islands:	
U.S. Virgin Islands	247

PART 82—PROTECTION OF STRATOSPHERIC OZONE

Subpart A—Production and Consumption Controls

Sec.
82.1 Purpose and scope.
82.2 [Reserved]
82.3 Definitions for class I and class II controlled substances.
82.4 Prohibitions for class I controlled substances.
82.5 Apportionment of baseline production allowances for class I controlled substances.
82.6 Apportionment of baseline consumption allowances for class I controlled substances.
82.7 Grant and phase reduction of baseline production and consumption allowances for class I controlled substances.
82.8 Grant of essential use allowances and critical use allowances.
82.9 Availability of production allowances in addition to baseline production allowances for class I controlled substances.
82.10 Availability of consumption allowances in addition to baseline consumption allowances for class I controlled substances.
82.11 Exports of class I controlled substances to Article 5 Parties.
82.12 Transfers of allowances for class I controlled substances.
82.13 Recordkeeping and reporting requirements for class I controlled substances.
82.15 Prohibitions for class II controlled substances.
82.16 Phaseout schedule of class II controlled substances.
82.17 Apportionment of baseline production allowances for class II controlled substances.
82.18 Availability of production in addition to baseline production allowances for class II controlled substances.
82.19 Apportionment of baseline consumption allowances for class II controlled substances.
82.20 Availability of consumption allowances in addition to baseline consumption allowances for class II controlled substances.
82.21–82.22 [Reserved]
82.23 Transfers of allowances of class II controlled substances.
82.24 Recordkeeping and reporting requirements for class II controlled substances.
APPENDIX A TO SUBPART A—CLASS I CONTROLLED SUBSTANCES
APPENDIX B TO SUBPART A—CLASS II CONTROLLED SUBSTANCES
APPENDIX C TO SUBPART A—PARTIES TO THE MONTREAL PROTOCOL, AND NATIONS COMPLYING WITH, BUT NOT PARTIES TO, THE PROTOCOL
APPENDIX D TO SUBPART A—HARMONIZED TARIFF SCHEDULE DESCRIPTION OF PRODUCTS THAT MAY CONTAIN CONTROLLED SUBSTANCES IN APPENDIX A, CLASS I, GROUPS I AND II
APPENDIX E TO SUBPART A—ARTICLE 5 PARTIES
APPENDIX F TO SUBPART A—LISTING OF OZONE-DEPLETING CHEMICALS
APPENDIX G TO SUBPART A—UNEP RECOMMENDATIONS FOR CONDITIONS APPLIED TO EXEMPTION FOR ESSENTIAL LABORATORY AND ANALYTICAL USES
APPENDIX H TO SUBPART A—CLEAN AIR ACT AMENDMENTS OF 1990 PHASEOUT SCHEDULE FOR PRODUCTION OF OZONE-DEPLETING SUBSTANCES
APPENDIX I TO SUBPART A—GLOBAL WARMING POTENTIALS (MASS BASIS), REFERENCED TO THE ABSOLUTE GWP FOR THE ADOPTED CARBON CYCLE MODEL CO_2 DECAY RESPONSE AND FUTURE CO_2 ATMOSPHERIC CONCENTRATIONS HELD CONSTANT AT CURRENT LEVELS. (ONLY DIRECT EFFECTS ARE CONSIDERED.)
APPENDIX J TO SUBPART A—PARTIES TO THE MONTREAL PROTOCOL CLASSIFIED UNDER ARTICLE 5(1) THAT HAVE BANNED THE IMPORT OF CONTROLLED PRODUCTS THAT RELY ON CLASS I CONTROLLED SUBSTANCES FOR THEIR CONTINUING FUNCTIONING [RESERVED]
APPENDIX K TO SUBPART A—COMMODITY CODES FROM THE HARMONIZED TARIFF SCHEDULE FOR CONTROLLED SUBSTANCES AND USED CONTROLLED SUBSTANCES
APPENDIX L TO SUBPART A—APPROVED CRITICAL USES AND LIMITING CRITICAL CONDITIONS FOR THOSE USES FOR THE 2012 CONTROL PERIOD

Subpart B—Servicing of Motor Vehicle Air Conditioners

82.30 Purpose and scope.
82.32 Definitions.
82.34 Prohibitions and required practices.
82.36 Approved refrigerant handling equipment.
82.38 Approved independent standards testing organizations.
82.40 Technician training and certification.

82.42 Certification, recordkeeping and public notification requirements.
APPENDIX A TO SUBPART B—STANDARD FOR RECYCLE/RECOVER EQUIPMENT
APPENDIX B TO SUBPART B—STANDARD FOR RECOVER EQUIPMENT
APPENDIX C TO SUBPART B—SAE J2788 STANDARD FOR RECOVERY/RECYCLE AND RECOVERY/RECYCLE/RECHARGING EQUIPMENT FOR HFC–134a REFRIGERANT
APPENDIX D TO SUBPART B—SAE J2810 STANDARD FOR RECOVERY ONLY EQUIPMENT FOR HFC–134a REFRIGERANT
APPENDIX E TO SUBPART B—THE STANDARD FOR AUTOMOTIVE REFRIGERANT RECYCLING EQUIPMENT INTENDED FOR USE WITH BOTH CFC-12 AND HFC-134a
APPENDIX F TO SUBPART B—STANDARD FOR RECOVER-ONLY EQUIPMENT THAT EXTRACTS A SINGLE, SPECIFIC REFRIGERANT OTHER THAN CFC-12 OR HFC-134a

Subpart C—Ban on Nonessential Products Containing Class I Substances and Ban on Nonessential Products Containing or Manufactured With Class II Substances

82.60 Purpose.
82.62 Definitions.
82.64 Prohibitions.
82.65 Temporary exemptions.
82.66 Nonessential Class I products and exceptions.
82.68 Verification and public notice requirements.
82.70 Nonessential Class II products and exceptions.

Subpart D—Federal Procurement

82.80 Purpose and scope.
82.82 Definitions.
82.84 Requirements.
82.86 Reporting requirements.

Subpart E—The Labeling of Products Using Ozone-Depleting Substances

82.100 Purpose.
82.102 Applicability.
82.104 Definitions.
82.106 Warning statement requirements.
82.108 Placement of warning statement.
82.110 Form of label bearing warning statement.
82.112 Removal of label bearing warning statement.
82.114 Compliance by manufacturers and importers with requirements for labeling of containers of controlled substances, or products containing controlled substances.
82.116 Compliance by manufacturers or importers incorporating products manufactured with controlled substances.
82.118 Compliance by wholesalers, distributors and retailers.
82.120 Petitions.
82.122 Certification, recordkeeping, and notice requirements.
82.124 Prohibitions.

Subpart F—Recycling and Emissions Reduction

82.150 Purpose and scope.
82.152 Definitions.
82.154 Prohibitions.
82.156 Required practices.
82.158 Standards for recycling and recovery equipment.
82.160 Approved equipment testing organizations.
82.161 Technician certification.
82.162 Certification by owners of recovery and recycling equipment.
82.164 Reclaimer certification.
82.166 Reporting and recordkeeping requirements.
82.169 Suspension and revocation procedures.
APPENDIX A TO SUBPART F—SPECIFICATIONS FOR FLUOROCARBON AND OTHER REFRIGERANTS
APPENDIX A1 TO SUBPART F—GENERIC MAXIMUM CONTAMINANT LEVELS
APPENDIX B1 TO SUBPART F—PERFORMANCE OF REFRIGERANT RECOVERY, RECYCLING AND/OR RECLAIM EQUIPMENT
APPENDIX B2 TO SUBPART F—PERFORMANCE OF REFRIGERANT RECOVERY, RECYCLING, AND/OR RECLAIM EQUIPMENT
APPENDIX C TO SUBPART F—METHOD FOR TESTING RECOVERY DEVICES FOR USE WITH SMALL APPLIANCES
APPENDIX D TO SUBPART F—STANDARDS FOR BECOMING A CERTIFYING PROGRAM FOR TECHNICIANS

Subpart G—Significant New Alternatives Policy Program

82.170 Purpose and scope.
82.172 Definitions.
82.174 Prohibitions.
82.176 Applicability.
82.178 Information required to be submitted.
82.180 Agency review of SNAP submissions.
82.182 Confidentiality of data.
82.184 Petitions.
APPENDIX A TO SUBPART G—SUBSTITUTES SUBJECT TO USE RESTRICTIONS AND UNACCEPTABLE SUBSTITUTES
APPENDIX B TO SUBPART G—SUBSTITUTES SUBJECT TO USE RESTRICTIONS AND UNACCEPTABLE SUBSTITUTES
APPENDIX C TO SUBPART G—SUBSTITUTES SUBJECT TO USE RESTRICTIONS AND UNACCEPTABLE SUBSTITUTES LISTED IN THE MAY 22, 1996 FINAL RULE, EFFECTIVE JUNE 21, 1996
APPENDIX D TO SUBPART G—SUBSTITUTES SUBJECT TO USE RESTRICTIONS AND UNACCEPTABLE SUBSTITUTES

APPENDIX E TO SUBPART G—UNACCEPTABLE SUBSTITUTES LISTED IN THE JANUARY 26, 1999 FINAL RULE, EFFECTIVE JANUARY 26, 1999
APPENDIX F TO SUBPART G—UNACCEPTABLE SUBSTITUTES LISTED IN THE JANUARY 26, 1999 FINAL RULE, EFFECTIVE JANUARY 26, 1999
APPENDIX G TO SUBPART G—SUBSTITUTES SUBJECT TO USE RESTRICTIONS AND UNACCEPTABLE SUBSTITUTES LISTED IN THE MARCH 3, 1999, FINAL RULE, EFFECTIVE APRIL 2, 1999
APPENDIX H TO SUBPART G—SUBSTITUTES SUBJECT TO USE RESTRICTIONS AND UNACCEPTABLE SUBSTITUTES, EFFECTIVE MAY 28, 1999
APPENDIX I TO SUBPART G—SUBSTITUTES SUBJECT TO USE RESTRICTIONS, LISTED IN THE APRIL 26, 2000, FINAL RULE, EFFECTIVE MAY 26, 2000
APPENDIX J TO SUBPART G—SUBSTITUTES LISTED IN THE JANUARY 29, 2002 FINAL RULE, EFFECTIVE APRIL 1, 2002
APPENDIX K TO SUBPART G—SUBSTITUTES SUBJECT TO USE RESTRICTIONS AND UNACCEPTABLE SUBSTITUTES LISTED IN THE JULY 22, 2002, FINAL RULE, EFFECTIVE AUGUST 21, 2002
APPENDIX L TO SUBPART G—SUBSTITUTES LISTED IN THE JANUARY 27, 2003, FINAL RULE, EFFECTIVE MARCH 28, 2003
APPENDIX M TO SUBPART G—UNACCEPTABLE SUBSTITUTES LISTED IN THE SEPTEMBER 30, 2004 FINAL RULE, EFFECTIVE NOVEMBER 29, 2004
APPENDIX N TO SUBPART G [RESERVED]
APPENDIX O TO SUBPART—SUBSTITUTES LISTED IN THE SEPTEMBER 27, 2006 FINAL RULE, EFFECTIVE NOVEMBER 27, 2006
APPENDIX P TO SUBPART G—SUBSTITUTES LISTED IN THE SEPTEMBER 27, 2006 FINAL RULE, EFFECTIVE NOVEMBER 27, 2006
APPENDIX Q TO SUBPART G—UNACCEPTABLE SUBSTITUTES LISTED IN THE MARCH 28, 2007 FINAL RULE, EFFECTIVE MAY 29, 2007
APPENDIX R TO SUBPART G—SUBSTITUTES SUBJECT TO USE RESTRICTIONS LISTED IN THE DECEMBER 20, 2011 FINAL RULE, EFFECTIVE FEBRUARY 21, 2012

Subpart H—Halon Emissions Reduction

82.250 Purpose and scope.
82.260 Definitions.
82.270 Prohibitions.

Subpart I—Ban on Refrigeration and Air-Conditioning Appliances Containing HCFCs

82.300 Purpose.
82.302 Definitions.
82.304 Prohibitions.
82.306 Prohibited products.

AUTHORITY: 42 U.S.C. 7414, 7601, 7671–7671q.

SOURCE: 57 FR 33787, July 30, 1992, unless otherwise noted.

Subpart A—Production and Consumption Controls

SOURCE: 60 FR 24986, May 10, 1995, unless otherwise noted.

§ 82.1 Purpose and scope.

(a) The purpose of the regulations in this subpart is to implement the Montreal Protocol on Substances that Deplete the Ozone Layer and sections 602, 603, 604, 605, 606, 607, 614 and 616 of the Clean Air Act Amendments of 1990, Public Law 101–549. The Protocol and section 604 impose limits on the production and consumption (defined as production plus imports minus exports, excluding transhipments and used controlled substances) of certain ozone-depleting substances, according to specified schedules. The Protocol also requires each nation that becomes a Party to the agreement to impose certain restrictions on trade in ozone-depleting substances with non-Parties.

(b) This subpart applies to any person that produces, transforms, destroys, imports or exports a controlled substance or imports or exports a controlled product.

[63 FR 41642, Aug. 4, 1998]

§ 82.2 [Reserved]

§ 82.3 Definitions for class I and class II controlled substances.

As used in this subpart, the term:

Administrator means the Administrator of the United States Environmental Protection Agency or his authorized representative. For purposes of reports and petitions, the Administrator must be written at the following mailing address: EPA (6205J), Global Programs Division, 1200 Pennsylvania Ave., NW., Washington, DC 20460.

Aircraft halon bottle means a vessel used as a component of an aircraft fire suppression system containing halon-1301 approved under FAA rules for installation in a certificated aircraft.

Appliance means any device which contains and uses a refrigerant and which is used for household or commercial purposes, including any air conditioner, refrigerator, chiller, or freezer.

Applicator means the person who applies methyl bromide.

Approved critical use(s) means those uses of methyl bromide listed in Column A of appendix L to this subpart as further clarified in Columns B and C of that appendix.

Approved critical user(s) means a person who:

(1) For the applicable control period, applied to EPA for a critical use exemption or is a member of a consortium that applied to EPA for a critical use exemption for a use and location of use that was included in the U.S. nomination, authorized by a Decision of the Parties to the Montreal Protocol, and then finally determined by EPA in a notice-and-comment rulemaking to be an approved critical use; and

(2) Has an area in the applicable location of use that requires methyl bromide fumigation because the person reasonably expects that the area will be subject to a limiting critical condition during the applicable control period.

Article 5 allowances means the allowances apportioned under §§ 82.9(a), 82.11(a)(2), and 82.18(a).

Baseline consumption allowances means the consumption allowances apportioned under §§ 82.6 and 82.19.

Baseline production allowances means the production allowances apportioned under §§ 82.5 and 82.17.

Beijing Amendments means the Montreal Protocol, as amended at the Eleventh Meeting of the Parties to the Montreal Protocol in Beijing in 1999.

Calculated level means the weighted amount of a controlled substance determined by multiplying the amount (in kilograms) of the controlled substance by that substance's ozone depletion potential (ODP) weight listed in appendix A or appendix B to this subpart.

Class I refers to the controlled substances listed in appendix A to this subpart.

Class II refers to the controlled substances listed in appendix B to this subpart.

Commodity Owner, Shipper or their Agent means the person requesting that an applicator use methyl bromide for quarantine or preshipment applications.

Completely destroy means to cause the expiration of a controlled substance at a destruction efficiency of 98 percent or greater, using one of the destruction technologies approved by the Parties.

Complying with the Protocol, when referring to a foreign state not Party to the 1987 Montreal Protocol, the London Amendments, or the Copenhagen Amendments, means that the non-Party has been determined as complying with the Protocol, as indicated in appendix C to this subpart, by a meeting of the Parties as noted in the records of the directorate of the United Nations Secretariat.

Confer means to shift the essential-use allowances obtained under § 82.8 from the holder of the unexpended essential-use allowances to a person for the production of a specified controlled substance, or to shift the HCFC–141b exemption allowances granted under § 82.16(h) from the holder of the unexpended HCFC–141b exemption allowances to a person for the production or import of the controlled substance.

Consortium means an organization representing a group of methyl bromide users that has collectively submitted an application for a critical use exemption on behalf of all members of the group. The members of a consortium shall be determined on the basis of the rules established by the organization. Members may either be required to formally join the consortium (*e.g.*, by submitting an application or paying dues) or may automatically become members upon meeting particular criteria (*e.g.*, a grower of a specific crop in a particular region).

Consumption means the production plus imports minus exports of a controlled substance (other than transhipments, or used controlled substances).

Consumption allowances means the privileges granted by this subpart to produce and import controlled substances; however, consumption allowances may be used to produce controlled substances only in conjunction with production allowances. A person's consumption allowances for class I substances are the total of the allowances obtained under §§ 82.6 and 82.7 and 82.10,

as may be modified under § 82.12 (transfer of allowances). A person's consumption allowances for class II controlled substances are the total of the allowances obtained under §§ 82.19 and 82.20, as may be modified under § 82.23.

Control period means the period from January 1, 1992 through December 31, 1992, and each twelve-month period from January 1 through December 31, thereafter.

Controlled product means a product that contains a controlled substance listed as a Class I, Group I or II substance in appendix A to this subpart. Controlled products include, but are not limited to, those products listed in appendix D to this subpart.

Controlled products belong to one or more of the following six categories of products:

(1) Automobile and truck air conditioning units (whether incorporated in vehicles or not);

(2) Domestic and commercial refrigeration and air-conditioning/heat pump equipment (whether containing controlled substances as a refrigerant and/or in insulating material of the product), e.g. Refrigerators, Freezers, Dehumidifiers, Water coolers, Ice machines, Air-conditioning and heat pump units;

(3) Aerosol products, except medical aerosols;

(4) Portable fire extinguishers;

(5) Insulation boards, panels and pipe covers;

(6) Pre-polymers.

Controlled substance means any substance listed in appendix A or appendix B to this subpart, whether existing alone or in a mixture, but excluding any such substance or mixture that is in a manufactured product other than a container used for the transportation or storage of the substance or mixture. Thus, any amount of a listed substance in appendix A or appendix B to this subpart that is not part of a use system containing the substance is a controlled substance. If a listed substance or mixture must first be transferred from a bulk container to another container, vessel, or piece of equipment in order to realize its intended use, the listed substance or mixture is a ''controlled substance.'' The inadvertent or coincidental creation of insignificant quantities of a listed substance in appendix A or appendix B to this subpart; during a chemical manufacturing process, resulting from unreacted feedstock, from the listed substance's use as a process agent present as a trace quantity in the chemical substance being manufactured, or as an unintended byproduct of research and development applications, is not deemed a controlled substance. Controlled substances are divided into two classes, Class I in appendix A to this subpart, and Class II listed in appendix B to this subpart. Class I substances are further divided into eight groups, Group I, Group II, Group III, Group IV, Group V, Group VI, Group VII, and Group VIII, as set forth in appendix A to this subpart.

Copenhagen Amendments means the Montreal Protocol on Substances That Deplete the Ozone Layer, as amended at the Fourth Meeting of the Parties to the Montreal Protocol in Copenhagen in 1992.

Critical stock allowance (CSA) means the right granted by this subpart to sell one (1) kilogram of class I, Group VI controlled substances from inventory produced or imported prior to the January 1, 2005 phaseout date for an approved critical use during the specified control period to the extent permitted by federal and state pesticide statutes and regulations other than the Clean Air Act and regulations in this part. A person's critical stock allowances are the total of the allowances obtained under § 82.8(c) as may be modified under § 82.12 (transfer of allowances).

Critical stock allowance (CSA) holder means an entity to which EPA allocates a quantity of critical stock allowances as reflected under § 82.8(c), or who receives a quantity of critical stock allowances through a transfer under § 82.12.

Critical use means a circumstance in which the following two conditions are satisfied:

(1) There are no technically and economically feasible alternatives or substitutes for methyl bromide available that are acceptable from the standpoint of environment and health and are suitable to the crops and circumstances involved, and

(2) The lack of availability of methyl bromide for a particular use would result in significant market disruption.

Critical use allowance (CUA) means the privilege granted by this subpart to produce or import one (1) kilogram of methyl bromide for an approved critical use during the specified control period. A person's critical use allowances are the total of the allowances obtained under § 82.8(c) as may be modified under § 82.12 (transfer of allowances).

Critical use allowance for pre-plant uses means the privilege granted by this subpart to produce or import one (1) kilogram of methyl bromide solely for an approved critical use in pre-plant categories specified in Appendix L to this subpart during the specified control period. A person's critical use allowances for pre-plant uses are the total of the allowances obtained under § 82.8(c) as may be modified under § 82.12 (transfer of allowances).

Critical use allowance for post-harvest uses means the privilege granted by this subpart to produce or import one (1) kilogram of methyl bromide solely for an approved critical use in post-harvest categories specified in appendix L to this subpart during the specified control period. A person's critical use allowances for post-harvest uses are the total of the allowances obtained under § 82.8(c) as may be modified under § 82.12 (transfer of allowances).

Critical use allowance (CUA) holder means an entity to which EPA allocates a quantity of critical use allowances as reflected in § 82.8(c) or who receives a quantity of critical use allowances through a transfer under § 82.12.

Critical use methyl bromide means the class I, Group VI controlled substance produced or imported through expending a critical use allowance or that portion of inventory produced or imported prior to the January 1, 2005 phaseout date that is sold only for approved critical uses through expending a critical stock allowance.

Destruction means the expiration of a controlled substance to the destruction efficiency actually achieved, unless considered completely destroyed as defined in this section. Such destruction does not result in a commercially useful end product and uses one of the following controlled processes approved by the Parties to the Protocol:

(1) Liquid injection incineration;
(2) Reactor cracking;
(3) Gaseous/fume oxidation;
(4) Rotary kiln incineration;
(5) Cement kiln;
(6) Radio frequency plasma; or
(7) Municipal waste incinerators only for the destruction of foams.

Distributor of methyl bromide means the person directly selling a class I, Group VI controlled substance to an applicator.

Essential Metered Dose Inhaler (Essential MDI) means metered dose inhalers for the treatment of asthma and chronic obstructive pulmonary disease, approved by the Food and Drug Administration or by another Party's analogous health authority before December 31, 2000, and considered to be essential by the Party where the MDI product will eventually be sold. In addition, if the MDI product is to be sold in the U.S., the active moiety contained in the MDI must be listed as essential at 21 CFR 2.125(e).

Essential-Use Allowances means the privileges granted by § 82.4(n) to produce class I substances, as determined by allocation decisions made by the Parties to the Montreal Protocol and in accordance with the restrictions delineated in the Clean Air Act Amendments of 1990.

Essential-Use Chlorofluorocarbons (Essential-use CFCs) are the CFCs (CFC-11, CFC-12, or CFC-114) produced under the authority of essential-use allowances and not the allowances themselves. Essential-use CFCs include CFCs imported or produced by U.S. entities under the authority of essential-use allowances for use in essential metered dose inhalers, as well as CFCs imported or produced by non-U.S. entities under the authority of privileges granted by the Parties and the national authority of another country for use in essential metered dose inhalers.

Essential-Uses means those uses of controlled substances designated by the Parties to the Protocol to be necessary for the health and safety of, or critical for the functioning of, society; and for which there are no available technically and economically feasible

alternatives or substitutes that are acceptable from the standpoint of environment and health. Beginning January 1, 2000 (January 1, 2002 for methyl chloroform) the essential use designations for class I substances must be made in accordance with the provisions of the Clean Air Act Amendments of 1990.

Export means the transport of virgin or used controlled substances from inside the United States or its territories to persons outside the United States or its territories, excluding United States military bases and ships for on-board use.

Export production allowances means the privileges granted by § 82.18(b) to produce HCFC-141b for export following the phaseout of HCFC-141b on January 1, 2003.

Exporter means the person who contracts to sell controlled substances for export or transfers controlled substances to his affiliate in another country.

Facility means any process equipment (e.g., reactor, distillation column) used to convert raw materials or feedstock chemicals into controlled substances or consume controlled substances in the production of other chemicals.

Foreign state means an entity which is recognized as a sovereign nation or country other than the United States of America.[1]

Foreign state not Party to or *Non-Party* means a foreign state that has not deposited instruments of ratification, acceptance, or other form of approval with the Directorate of the United Nations Secretariat, evidencing the foreign state's ratification of the provisions of the 1987 Montreal Protocol, the London Amendments, or of the Copenhagen Amendments, as specified.

Formulator means an entity that distributes a class II controlled substance(s) or blends of a class II controlled substance(s) to persons who use the controlled substance(s) for a specific application identified in the formulator's petition for HCFC-141b exemption allowances.

HCFC-141b exemption allowances means the privileges granted to a HCFC-141b formulator; an agency, department, or instrumentality of the U.S.; or a non-governmental space vehicle entity by this subpart to order production of or to import HCFC-141b, as determined in accordance with § 82.16(h).

Heel means the amount of a controlled substance that remains in a container after it is discharged or offloaded (that is no more than ten percent of the volume of the container).

Hydrostatic testing means checking a gas pressure vessel for leaks or flaws. The vessel is filled with a nearly incompressible liquid—usually water or oil—and examined for leaks or permanent changes in shape.

Import means to land on, bring into, or introduce into, or attempt to land on, bring into, or introduce into any place subject to the jurisdiction of the United States whether or not such landing, bringing, or introduction constitutes an importation within the meaning of the customs laws of the United States, with the following exemptions:

(1) Off-loading used or excess controlled substances or controlled products from a ship during servicing,

(2) Bringing controlled substances into the U.S. from Mexico where the controlled substance had been admitted into Mexico in bond and was of U.S. origin, and

(3) Bringing a controlled product into the U.S. when transported in a consignment of personal or household effects or in a similar non-commercial situation normally exempted from U.S. Customs attention.

Importer means any person who imports a controlled substance or a controlled product into the United States. ''Importer'' includes the person primarily liable for the payment of any duties on the merchandise or an authorized agent acting on his or her behalf. The term also includes, as appropriate:

(1) The consignee;

(2) The importer of record (listed on U.S. Customs Service forms for imported controlled substances, used controlled substances or controlled products);

(3) The actual owner; or

[1] Taiwan is not considered a foreign state.

(4) The transferee, if the right to draw merchandise in a bonded warehouse has been transferred.

Individual shipment means the kilograms of a used controlled substance for which a person may make one (1) U.S. Customs entry as, as identified in the non-objection letter from the Administrator under §§ 82.13(g) and 82.24(c)(4).

Interstate commerce means the distribution or transportation of any controlled substance between one state, territory, possession or the District of Columbia, and another state, territory, possession or the District of Columbia, or the sale, use or manufacture of any controlled substance in more than one state, territory, possession or District of Columbia. The entry points for which a controlled substance is introduced into interstate commerce are the release of a controlled substance from the facility in which the controlled substance was manufactured, the entry into a warehouse from which the domestic manufacturer releases the controlled substance for sale or distribution, and at the site of United States customs clearance.

Limiting critical condition means the regulatory, technical, and economic circumstances listed in Column C of Appendix L to this subpart that establish conditions of critical use for methyl bromide in a fumigation area.

Location of use means the geographic area (such as a state, region, or the entire United States) covered by an application for a critical use exemption in which the limiting critical condition may occur.

London Amendments means the Montreal Protocol, as amended at the Second Meeting of the Parties to the Montreal Protocol in London in 1990.

Manufactured, for an appliance, means the date upon which the appliance's refrigerant circuit is complete, the appliance can function, the appliance holds a full refrigerant charge, and the appliance is ready for use for its intended purposes; and for a precharged appliance component, means the date that such component is completely produced by the original equipment manufacture, charged with refrigerant, and is ready for initial sale or distribution in interstate commerce.

Montreal Anniversary amendments means the Montreal Protocol, as amended at the Ninth Meeting of the Parties to the Montreal Protocol in Montreal in 1997.

Montreal Protocol means the Montreal Protocol on Substances that Deplete the Ozone Layer, a protocol to the Vienna Convention for the Protection of the Ozone Layer, including adjustments adopted by the Parties thereto and amendments that have entered into force.

1987 Montreal Protocol means the Montreal Protocol, as originally adopted by the Parties in 1987.

Nations complying with, but not joining, the Protocol means any nation listed in Appendix C, Annex 2, to this subpart.

Non-Objection notice means the privilege granted by the Administrator to import a specific individual shipment of used controlled substance in accordance with §§ 82.13(g) and 82.24(c)(3) and (4).

Party means any foreign state that is listed in Appendix C to this subpart (pursuant to instruments of ratification, acceptance, or approval deposited with the Depositary of the United Nations Secretariat), as having ratified the specified control measure in effect under the Montreal Protocol. Thus, for purposes of the trade bans specified in § 82.4(l)(2) pursuant to the London Amendments, only those foreign states that are listed in Appendix C to this subpart as having ratified both the 1987 Montreal Protocol and the London Amendments shall be deemed to be Parties.

Person means any individual or legal entity, including an individual, corporation, partnership, association, state, municipality, political subdivision of a state, Indian tribe; any agency, department, or instrumentality of the United States; and any officer, agent, or employee thereof.

Plant means one or more facilities at the same location owned by or under common control of the same person.

Preshipment applications, with respect to class I, Group VI controlled substances, are those non-quarantine applications applied within 21 days prior

to export to meet the official requirements of the importing country or existing official requirements of the exporting country. Official requirements are those which are performed by, or authorized by, a national plant, animal, environmental, health or stored product authority.

Production means the manufacture of a controlled substance from any raw material or feedstock chemical, but does not include:

(1) The manufacture of a controlled substance that is subsequently transformed;

(2) The reuse or recycling of a controlled substance;

(3) Amounts that are destroyed by the approved technologies; or

(4) Amounts that are spilled or vented unintentionally.

Production allowances means the privileges granted by this subpart to produce controlled substances; however, production allowances may be used to produce controlled substances only in conjunction with consumption allowances. A person's production allowances for class I substances are the total of the allowances obtained under §§ 82.5, 82.7 and 82.9, and as may be modified under § 82.12 (transfer of allowances). A person's production allowances for class II controlled substances are the total of the allowances obtained under § 82.17 and as may be modified under §§ 82.18 and 82.23.

Quarantine applications, with respect to class I, Group VI controlled substances, are treatments to prevent the introduction, establishment and/or spread of quarantine pests (including diseases), or to ensure their official control, where: (1) Official control is that performed by, or authorized by, a national (including state, tribal or local) plant, animal or environmental protection or health authority; (2) quarantine pests are pests of potential importance to the areas endangered thereby and not yet present there, or present but not widely distributed and being officially controlled. This definition excludes treatments of commodities not entering or leaving the United States or any State (or political subdivision thereof).

Source facility means the location at which a used controlled substance was recovered from a piece of equipment, including the name of the company responsible for, or owning the piece of equipment, a contact person at the location, the mailing address for that specific location, and a phone number and a fax number for the contact person at the location.

Space vehicle means a man-made device, either manned or unmanned, designed for operation beyond earth's atmosphere. This definition includes integral equipment such as models, mock-ups, prototypes, molds, jigs, tooling, hardware jackets, and test coupons. Also included is auxiliary equipment associated with tests, transport, and storage, which through contamination can compromise the space vehicle performance.

Third party applicator means an applicator of critical use methyl bromide who fumigates or treats commodities, structures, crops, or land on behalf of an approved critical user.

Transform means to use and entirely consume (except for trace quantities) a controlled substance in the manufacture of other chemicals for commercial purposes.

Transhipment means the continuous shipment of a controlled substance, from a foreign state of origin through the United States or its territories, to a second foreign state of final destination, as long as the shipment does not enter into United States jurisdiction. A transhipment, as it moves through the United States or its territories, cannot be re-packaged, sorted or otherwise changed in condition.

Unexpended Article 5 allowances means Article 5 allowances that have not been used. At any time in any control period a person's unexpended Article 5 allowances are the total of the level of Article 5 allowances the person has authorization under this subpart to hold at that time for that control period, minus the level of controlled substances that the person has produced in that control period until that time.

Unexpended consumption allowances means consumption allowances that have not been used. At any time in any control period a person's unexpended consumption allowances are the total of the level of consumption allowances the person has authorization under this

subpart to hold at that time for that control period, minus the level of controlled substances that the person has produced or imported (not including transhipments and used controlled substances) in that control period until that time.

Unexpended critical stock allowance (CSA) means critical stock allowances against which methyl bromide has not yet been sold for an approved critical use.

Unexpended critical use allowances (CUA) means critical use allowances against which methyl bromide has not yet been produced or imported. At any time in any control period a person's unexpended critical use allowances are the total of the level of critical use allowances the person holds at that time for that control period, minus the level of class I, Group VI controlled substances that the person has produced or has imported solely for approved critical uses in that control period.

Unexpended destruction and transformation credits means destruction and transformation credits that have not been used. At any time in any control period a person's unexpended destruction and transformation credits are the total of the level of destruction and transformation credits the person has authorization under this subpart to hold at that time for that control period, minus the level of controlled substances that the person has produced or imported (not including transhipments and used controlled substances) in that control period until that time.

Unexpended essential-use allowances means essential-use allowances that have not been used. At any time in any control period a person's unexpended essential-use allowances are the total of the level of essential-use allowances the person has authorization under this subpart to hold at that time for that control period, minus the level of controlled substances that the person has imported or had produced in that control period until that time.

Unexpended export production allowances means export production allowances that have not been used. A person's unexpended export production allowances are the total of the quantity of the export production allowances the person has authorization under § 82.18(h) to hold for that control period, minus the quantity of class II controlled substances that the person has produced at that time during the same control period.

Unexpended HCFC-141b exemption allowances means HCFC-141b exemption allowances that have not been used. A person's unexpended HCFC-141b exemption allowances are the total of the quantity of the HCFC-141b exemption allowances the person has authorization under § 82.16(h) to hold for that control period, minus the quantity of HCFC-141b that the person has had produced or has had imported at that time during the same control period.

Unexpended production allowances means production allowances that have not been used. At any time in any control period a person's unexpended production allowances are the total of the level of production allowances he has authorization under this subpart to hold at that time for that control period, minus the level of controlled substances that the person has produced in that control period until that time.

Used controlled substances means controlled substances that have been recovered from their intended use systems (may include controlled substances that have been, or may be subsequently, recycled or reclaimed).

[60 FR 24986, May 10, 1995, as amended at 63 FR 41642, Aug. 4, 1998; 66 FR 37767, July 19, 2001; 67 FR 6359, Feb. 11, 2002; 67 FR 79872, Dec. 31, 2002; 67 FR 251, Jan. 2, 2003; 68 FR 2847, Jan. 21, 2003; 68 FR 42891, July 18, 2003; 69 FR 4064, Jan. 28, 2004; 69 FR 77001, Dec. 23, 2004; 70 FR 77047, Dec. 29, 2005; 71 FR 41171, July 20, 2006; 74 FR 10188, Mar. 10, 2009; 74 FR 66445, Dec. 15, 2009]

§ 82.4 Prohibitions for class I controlled substances.

(a)(1) Prior to January 1, 1996, for all Groups of class I controlled substances, and prior to January 1, 2005, for class I, Group VI controlled substances, no person may produce, at any time in any control period, (except that are transformed or destroyed domestically or by a person of another Party) in excess of the amount of unexpended production allowances or unexpended Article 5 allowances for that substance held by that person under the authority of this subpart at that time for that control

period. Every kilogram of excess production constitutes a separate violation of this subpart.

(2) Effective January 1, 2003, production of class I, Group VI controlled substances is not subject to the prohibitions in paragraph (a)(1) of this section if it is solely for quarantine or preshipment applications as defined in this subpart.

(b)(1) Effective January 1, 1996, for any Class I, Group I, Group II, Group III, Group IV, Group V or Group VII controlled substances, and effective January 1, 2005 for any Class I, Group VI controlled substances, and effective August 18, 2003, for any Class I, Group VIII controlled substance, no person may produce, at any time in any control period (except that are transformed or destroyed domestically or by a person of another Party) in excess of the amount of conferred unexpended essential use allowances or exemptions, or in excess of the amount of unexpended critical use allowances, or in excess of the amount of unexpended Article 5 allowances as allocated under § 82.9 and § 82.11, as may be modified under § 82.12 (transfer of allowances) for that substance held by that person under the authority of this subpart at that time for that control period. Every kilogram of excess production constitutes a separate violation of this subpart.

(2) Effective January 1, 2005, production of class I, Group VI controlled substances is not subject to the prohibitions in paragraph (b)(1) of this section if it is solely for quarantine or preshipment applications as defined in this subpart, or it is solely for export to satisfy critical uses authorized by the Parties for that control period.

(c)(1) Prior to January 1, 1996, for all Groups of class I controlled substances, and prior to January 1, 2005, for class I, Group VI controlled substances, no person may produce or (except for transhipments, heels or used controlled substances) import, at any time in any control period, (except for controlled substances that are transformed or destroyed) in excess of the amount of unexpended consumption allowances held by that person under the authority of this subpart at that time for that control period. Every kilogram of excess production or importation (other than transhipments, heels or used controlled substances) constitutes a separate violation of this subpart.

(2) Effective January 1, 2003, production and import of class I, Group VI controlled substances is not subject to the prohibitions in paragraph (c)(1) of this section if it is solely for quarantine or preshipment applications as defined in this subpart.

(d) Effective January 1, 1996, for any class I, Group I, Group II, Group III, Group IV, Group V, or Group VII controlled substances, and effective January 1, 2005, for any class I, Group VI controlled substance, and effective August 18, 2003, for any class I, Group VIII controlled substance, no person may import (except for transhipments or heels), at any time in any control period, (except for controlled substances that are transformed or destroyed) in excess of the amount of unexpended essential use allowances or exemptions, or in excess of unexpended critical use allowances, for that substance held by that person under the authority of this subpart at that time for that control period. Every kilogram of excess importation (other than transhipments or heels) constitutes a separate violation of this subpart. It is a violation of this subpart to obtain unused class I controlled substances under the general laboratory exemption in excess of actual need and to recycle that material for sale into other markets.

(e) Effective January 1, 1996, no person may place an order by conferring essential-use allowances for the production of the class I controlled substance, at any time in any control period, in excess of the amount of unexpended essential-use allowances, held by that person under the authority of this subpart at that time for that control period. Effective January 1, 1996, no person may import a class I controlled substance with essential-use allowances, at any time in any control period, in excess of the amount of unexpended essential-use allowances, held by that person under the authority of this subpart at that time for that control period. No person may import or place an order for the production of a class I controlled substance with essential-use allowances, at any time in any

control period, other than for the class I controlled substance(s) for which they received essential-use allowances under paragraph (u) of this section. Every kilogram of excess production ordered in excess of the unexpended essential-use allowances conferred to the producer constitutes a separate violation of this subpart. Every kilogram of excess import in excess of the unexpended essential-use allowances held at that time constitutes a separate violation of this subpart.

(f) Effective January 1, 1996, no person may place an order by conferring transformation and destruction credits for the production of the class I controlled substance, at any time in any control period, in excess of the amount of transformation and destruction credits, held by that person under the authority of this subpart at that time for that control period. Effective January 1, 1996, no person may import class I controlled substance, at any time in any control period, in excess of the amount of transformation and destruction credits, held by that person under the authority of this subpart at that time for that control period. No person may import or place an order for the production of a class I controlled substance with transformation and destruction credits, at any time in any control period, other than for the class I controlled substance(s) for which they received transformation and destruction credits as under § 82.9(f). Every kilogram of excess production ordered in excess of the unexpended transformation and destruction credits conferred to the producer constitutes a separate violation of this subpart. Every kilogram of excess import in excess of the unexpended transformation and destruction credits held at that time constitutes a separate violation of this subpart.

(g) Effective January 1, 1996, the U.S. total production and importation of a class I controlled substance (except Group VI) as allocated under this section for essential-use allowances and exemptions, and as obtained under § 82.9 for destruction and transformation credits, may not, at any time, in any control period until January 1, 2000, exceed the percent limitation of baseline production in appendix H of this subpart, as set forth in the Clean Air Act Amendments of 1990. No person shall cause or contribute to the U.S. exceedance of the national limit for that control period.

(h) No person may sell in the U.S. any Class I controlled substance produced explicitly for export to an Article 5 country.

(i) Effective January 1, 1995, no person may import, at any time in any control period, a heel of any class I controlled substance that is greater than 10 percent of the volume of the container in excess of the amount of unexpended consumption allowances, or unexpended destruction and transformation credits held by that person under the authority of this subpart at that time for that control period. Every kilogram of excess importation constitutes a separate violation of this subpart.

(j) Effective January 1, 1995, no person may import, at any time in any control period, a used class I controlled substance, except for Group II used controlled substances shipped in aircraft halon bottles for hydrostatic testing, without having received a non-objection notice from the Administrator in accordance with § 82.13(g)(2) and (3). A person who receives a non-objection notice for the import of an individual shipment of used controlled substances may not transfer or confer the right to import, and may not import any more than the exact quantity, in kilograms, of the used controlled substance cited in the non-objection notice. Every kilogram of importation of used controlled substance in excess of the quantity cited in the non-objection notice issued by the Administrator in accordance with § 82.13(g)(2) and (3) constitutes a separate violation.

(k)(1) Prior to January 1, 1996, for all Groups of class I controlled substances, and prior to January 1, 2005, for class I, Group VI controlled substances, a person may not use production allowances to produce a quantity of a class I controlled substance unless that person holds under the authority of this subpart at the same time consumption allowances sufficient to cover that quantity of class I controlled substances nor may a person use consumption allowances to produce a quantity of class I

controlled substances unless the person holds under authority of this subpart at the same time production allowances sufficient to cover that quantity of class I controlled substances. However, prior to January 1, 1996, for all class I controlled substances, and prior to January 1, 2005, for class I, Group VI controlled substances, only consumption allowances are required to import, with the exception of transhipments, heels, and used controlled substances. Effective January 1, 1996, for all Groups of class I controlled substances, except Group VI, only essential use allowances or exemptions are required to import class I controlled substances, with the exception of transhipments, heels, used controlled substances, and essential use CFCs.

(2) Notwithstanding paragraph (k)(1) of this section, effective January 1, 2003, for class I, Group VI controlled substances, consumption allowances are not required to import quantities solely for quarantine or preshipment applications as defined in this subpart.

(l) Every kilogram of a controlled substance, and every controlled product, imported or exported in contravention of this subpart constitutes a separate violation of this subpart, thus no person may:

(1) Import or export any quantity of a controlled substance listed in Class I, Group I or Group II, in appendix A to this subpart from or to any foreign state not listed as a Party to the 1987 Montreal Protocol unless that foreign state is complying with the 1987 Montreal Protocol (See appendix C, annex 2 of this subpart);

(2) Import or export any quantity of a controlled substance listed in Class I, Group III, Group IV or Group V, in appendix A to this subpart, from or to any foreign state not Party to the London Amendments (as noted in appendix C, annex l, to this subpart), unless that foreign state is complying with the London Amendments (as noted in appendix C, annex 2, to this subpart); or

(3) Import a controlled product, as noted in appendix D, annex 1 to this subpart, from any foreign state not Party to the 1987 Montreal Protocol (as noted in appendix C, annex 1, to this subpart), unless that foreign state is complying with the Protocol (as noted in appendix C, annex 2, to this subpart).

(4) Import or export any quantity of a controlled substance listed in Class I, Group VII, in appendix A to this subpart, from or to any foreign state not Party to the Copenhagen Amendments (as noted in appendix C, annex l, to this subpart), unless that foreign state is complying with the Copenhagen Amendments (as noted in appendix C, annex 2, to this subpart.

(5) Import or export any quantity of a controlled substance listed in Class I, Group VI, in appendix A to this subpart, from or to any foreign state not Party to the Copenhagen Amendments (as noted in appendix C, annex l, to this subpart), unless that foreign state is complying with the Copenhagen Amendments (as noted in appendix C, annex 2, to this subpart).

(6) Import or export any quantity of a controlled substance listed in Class I, Group VIII, in appendix A to this subpart, from or to any foreign state not Party to the Beijing Amendments (as noted in appendix C, annex 1, to this subpart), unless that foreign state is complying with the Beijing Amendments (as noted in appendix C, annex 2, to this subpart).

(m) Effective October 5, 1998, no person may export a controlled product to a Party listed in appendix J of this subpart in any control period after the control period in which EPA publishes a notice in the FEDERAL REGISTER listing that Party in appendix J of this subpart. EPA will publish a notice in the FEDERAL REGISTER that lists a Party in appendix J if the Party formally presents to the U.S. a government document through its embassy in the United States stating that it has established a ban on the import of controlled products and a ban on the manufacture of those same controlled products.

(n) No person may use class I controlled substances produced or imported under the essential use exemption for any purpose other than those set forth in this paragraph. Effective January 1, 1996, essential-use allowances are apportioned to a person under § 82.8(a) and (b) for the exempted production or importation of specified class I controlled substances solely for

the purposes listed in paragraphs (n)(1)(i) through (iii) of this section.

(1) Essential-uses for the production or importation of controlled substances as agreed to by the Parties to the Protocol and subject to the periodic revision of the Parties are:

(i) Metered dose inhalers (MDIs) for the treatment of asthma and chronic obstructive pulmonary disease that were approved by the Food and Drug Administration before December 31, 2000.

(ii) Space Shuttle—solvents.

(iii) Essential laboratory and analytical uses (defined in appendix G of this subpart).

(2) Any person acquiring unused class I controlled substances produced or imported under the authority of essential-use allowances or the essential-use exemption granted in § 82.8 to this subpart for use in anything other than an essential-use (*i.e.*, for uses other than those specifically listed in paragraph (n)(1) of this section) is in violation of this subpart. Each kilogram of unused class I controlled substance produced or imported under the authority of essential-use allowances or the essential-use exemption and used for a non-essential use is a separate violation of this subpart. Any person selling unused class I controlled substances produced or imported under authority of essential-use allowances or the essential-use exemption for uses other than an essential-use is in violation of this subpart. Each kilogram of unused class I controlled substances produced or imported under authority of essential-use allowances or the essential-use exemption and sold for a use other than an essential-use is a separate violation of this subpart. It is a violation of this subpart to obtain unused class I controlled substances under the exemption for laboratory and analytical uses in excess of actual need and to recycle that material for sale into other markets.

(o) [Reserved]

(p) Critical Use Exemption: With respect to class I, Group VI substances (methyl bromide):

(1) For critical use allowance holders and critical stock allowance holders:

(i) No person shall sell critical use methyl bromide without first receiving a certification from the purchaser that the quantity purchased will be sold or used solely for an approved critical use. Every kilogram of critical use methyl bromide sold without first obtaining such certification constitutes a separate violation of this subpart.

(ii) No person shall sell a portion of inventory produced or imported prior to the January 1, 2005 phaseout date as critical use methyl bromide in excess of the number of unexpended critical stock allowances held by that person.

(iii) A person who sells methyl bromide produced or imported before the phaseout date of January 1, 2005 for a use identified by the user as a critical use must hold sufficient critical stock allowances (CSA) for the transaction and shall expend one allowance for each kilogram of methyl bromide sold. Every kilogram of critical use methyl bromide produced or imported before the phaseout date of January 1, 2005 that is sold without expending an allowance constitutes a separate violation of this subpart.

(2) For approved critical users, each action associated with each 200 kilograms of critical use methyl bromide for the following subparagraphs constitutes a separate violation of this subpart.

(i) No person shall take possession of quantities of critical use methyl bromide or acquire fumigation services using quantities of critical use methyl bromide without first completing the appropriate certification in accordance with the requirements in § 82.13.

(ii) No person who purchases critical use methyl bromide may use such quantities for a use other than the specified critical use listed in column A and the specified location of use in column B of appendix L to this subpart.

(iii) No person who purchases critical use methyl bromide produced or imported with expended critical use allowances for pre-plant uses, may use such quantities for other than the pre-plant uses as specified in column A and column B of appendix L to this subpart.

(iv) No person who purchases critical use methyl bromide produced or imported with expended critical use allowances for post-harvest uses, may

use such quantities for other than the post-harvest uses as specified in column A and column B of appendix L to this subpart.

(v) No person who uses critical use methyl bromide on a specific field or structure may concurrently or subsequently use non-critical use methyl bromide on the same field or structure for the same use (as defined in column A and column B of appendix L) in the same control period, excepting methyl bromide used under the quarantine and pre-shipment exemption.

(vi) No person who purchases critical use methyl bromide during the control period shall use that methyl bromide on a field or structure for which that person has used non-critical use methyl bromide for the same use (as defined in columns A and B of appendix L) in the same control period, excepting methyl bromide used under the quarantine and pre-shipment exemption, unless, subsequent to that person's use of the non-critical use methyl bromide, that person becomes subject to a prohibition on the use of methyl bromide alternatives due to the reaching of a local township limit described in appendix L of this part, or becomes an approved critical user as a result of rulemaking.

(q) Emergency use exemption. [Reserved]

[60 FR 24986, May 10, 1995]

EDITORIAL NOTE: For FEDERAL REGISTER citations affecting § 82.4, see the List of CFR Sections Affected, which appears in the Finding Aids section of the printed volume and at *www.fdsys.gov*.

§ 82.5 Apportionment of baseline production allowances for class I controlled substances.

Persons who produced controlled substances in Group I or Group II in 1986 are apportioned baseline production allowances as set forth in paragraphs (a) and (b) of this section. Persons who produced controlled substances in Group III, IV, or V in 1989 are apportioned baseline production allowances as set forth in paragraphs (c), (d), and (e) of this section. Persons who produced controlled substances in Group VI and VII in 1991 are apportioned baseline allowances as set forth in paragraphs (f) and (g) of this section.

Controlled substance	*Person*	*Allowances* (kg)
(a) For Group I controlled substances:		
CFC-11	Allied-Signal, Inc	23,082,358
	E.I. DuPont de Nemours & Co	33,830,000
	Elf Atochem, N.A	21,821,500
CFC-12	Laroche Chemicals	12,856,364
	Allied-Signal, Inc	35,699,776
	E.I. DuPont de Nemours & Co	64,849,000
	Elf Atochem, N.A	31,089,807
CFC-113	Laroche Chemicals	15,330,909
	Allied-Signal, Inc	21,788,896
CFC-114	E.I. DuPont de Nemours & Co	58,553,000
	Allied-Signal, Inc	1,488,569
CFC-115	E.I. DuPont de Nemours & Co	4,194,000
	E.I. DuPont de Nemours & Co	4,176,000
(b) For Group II controlled substances:		
Halon-1211	Great Lakes Chemical Corp	826,487
	ICI Americas, Inc	2,135,484
Halon-1301	E.I. DuPont de Nemours & Co	3,220,000
	Great Lakes Chemical Corp	1,766,850
Halon-2402		
(c) For Group III controlled substances:		
CFC-13	Allied-Signal, Inc	127,125
	E.I. DuPont de Nemours & Co	187,831
	Elf Atochem, N.A	3,992
	Great Lakes Chemical Corp	56,381
	Laroche Chemicals	29,025
CFC-111		
CFC-112		

Controlled substance	*Person*	*Allowances* (kg)
CFC-211	E.I. DuPont de Nemours & Co	11
CFC-212	E.I. DuPont de Nemours & Co	11
CFC-213	E.I. DuPont de Nemours & Co	11
CFC-214	E.I. DuPont de Nemours & Co	11
CFC-215	E.I. DuPont de Nemours & Co	511
	Halocarbon Products Corp	1,270
CFC-216	E.I. DuPont de Nemours & Co	170,574
CFC-217	E.I. DuPont de Nemours & Co	511
(d) For Group IV controlled substances:		
CCl_4	Akzo Chemicals, Inc	7,873,615
	Degussa Corporation	26,546
	Dow Chemical Company, USA	18,987,747
	E.I. DuPont de Nemours & Co	9,099
	Hanlin Chemicals-WV, Inc	219,616
	ICI Americas, Inc	853,714
	Occidental Chemical Corp	1,059,358
	Vulcan Chemicals	21,931,987
(e) For Group V controlled substances:		
Methyl Chloroform	Dow Chemical Company, USA	168,030,117
	E.I. DuPont de Nemours & Co	2
	PPG Industries, Inc	57,450,719
	Vulcan Chemicals	89,689,064
(f) For Group VI controlled substances:		
Methyl Bromide	Great Lakes Chemical Corporation	19,945,788
	Ethyl Corporation	8,233,894
(g) For Group VII controlled substances:		
HBFC 22B1–1	Great Lakes Chemical Corporation	46,211

[60 FR 24986, May 10, 1995, as amended at 68 FR 2848, Jan. 21, 2003]

§ 82.6 Apportionment of baseline consumption allowances for class I controlled substances.

Persons who produced, imported, or produced and imported controlled substances in Group I or Group II in 1986 are apportioned chemical-specific baseline consumption allowances as set forth in paragraphs (a) and (b) of this section. Persons who produced, imported, or produced and imported controlled substances in Group III, Group IV, or Group V in 1989 are apportioned chemical-specific baseline consumption allowances as set forth in paragraphs (c), (d) and (e) of this section. Persons who produced, imported, or produced and imported controlled substances in Group VI or VII in 1991 are apportioned chemical specific baseline consumption allowances as set forth in paragraphs (f) and (g) of this section.

Controlled substance	*Person*	*Allowances (kg)*
	(a) For Group I controlled substances:	
CFC-11	Allied-Signal, Inc	22,683,833
	E.I. DuPont de Nemours & Co	32,054,283
	Elf Atochem, N.A	21,740,194
	Hoechst Celanese Corporation	185,396
	ICI Americas, Inc	1,673,436
	Kali-Chemie Corporation	82,500
	Laroche Chemicals	12,695,726
	National Refrigerants, Inc	693,707
	Refricentro, Inc	160,697
	Sumitomo Corporation of America	5,800
CFC-12	Allied-Signal, Inc	35,236,397
	E.I. DuPont de Nemours & Co	61,098,726

Controlled substance	*Person*	*Allowances (kg)*
	Elf Atochem, N.A	32,403,869
	Hoechst Celanese Corporation	138,865
	ICI Americas, Inc	1,264,980
	Kali-Chemie Corporation	355,440
	Laroche Chemicals	15,281,553
	National Refrigerants, Inc	2,375,384
	Refricentro, Inc	242,526
CFC-113	Allied-Signal, Inc	18,241,928
	E.I. DuPont de Nemours & Co	49,602,858
	Elf Atochem, N.A	244,908
	Holchem	265,199
	ICI Americas, Inc	2,399,700
	Refricentro, Inc	37,385
	Sumitomo Corp. of America	280,163
CFC-114	Allied-Signal, Inc	1,429,582
	E.I. DuPont de Nemours & Co	3,686,103
	Elf Atochem, N.A	22,880
	ICI Americas, Inc	32,930
CFC-115	E.I. DuPont de Nemours & Co	2,764,109
	Elf Atochem, N.A	633,007
	Hoechst Celanese Corporation	8,893
	ICI Americas, Inc	2,366,351
	Laroche Chemicals	135,520
	Refricentro, Inc	27,337
	(b) For Group II controlled substances:	
Halon-1211	Elf Atochem, N.A	411,292
	Great Lakes Chemical Corp	772,775
	ICI Americas, Inc	2,116,641
	Kali-Chemie Corporation	330,000
Halon-1301	E.I. DuPont de Nemours & Co	2,772,917
	Elf Atochem, N.A	89,255
	Great Lakes Chemical Corp	1,744,132
	Kali-Chemie Corporation	54,380
Halon-2402	Ausimont	34,400
	Great Lakes Chemical Corp	15,900
	(c) For Group III controlled substances:	
CFC-13	Allied-Signal, Inc	127,124
	E.I. DuPont de Nemours & Co	158,508
	Elf Atochem, N.A	3,992
	Great Lakes Chemical Corp	56,239
	ICI Americas, Inc	5,855
	Laroche Chemicals	29,025
	National Refrigerants, Inc	16,665
CFC-111		
CFC-112	Sumitomo Corp of America	5,912
	TG (USA) Corporation	9,253
CFC-211	E.I. DuPont de Nemours & Co	11
CFC-212	E.I. DuPont de Nemours & Co	11
CFC-213	E.I. DuPont de Nemours & Co	11
CFC-214	E.I. DuPont de Nemours & Co	11
CFC-215	E.I. DuPont de Nemours & Co	511
	Halocarbon Products Corp	1,270
CFC-216	E.I. DuPont de Nemours & Co	170,574
CFC-217	E.I. DuPont de Nemours & Co	511
	(d) For Group IV controlled substances:	
CCl_4	Crescent Chemical Co	56
	Degussa Corporation	12,466
	Dow Chemical Company, USA	8,170,561
	E.I. DuPont de Nemours & Co	26,537
	Elf Atochem, N.A	41
	Hanlin Chemicals-WV, Inc	103,133
	Hoechst Celanese Corporation	3

Controlled substance	*Person*	*Allowances (kg)*
	ICC Chemical Corp	1,173,723
	ICI Americas, Inc	855,466
	Occidental Chemical Corp	497,478
	Sumitomo Corporation of America	9
	(e) For Group V controlled substances:	
Methyl Chloroform	3V Chemical Corp	3,528
	Actex, Inc	50,171
	Atochem North America	74,355
	Dow Chemical Company, USA	125,200,200
	E.I. DuPont de Nemours & Co	2
	IBM	2,026
	ICI Americas, Inc	14,179,850
	Laidlaw	420,207
	PPG Industries	45,254,115
	Sumitomo	1,954
	TG (USA) Corporation	7,073
	Unitor Ships Service, Inc	14,746
	Vulcan Chemicals	70,765,072
	(f) For Group VI controlled substances:	
Methyl Bromide	Great Lakes Chemical Corporation	15,514,746
	Ethyl Corporation	6,379,906
	AmeriBrom, Inc	3,524,393
	TriCal, Inc	109,225
	(g) For Group VII controlled substances:	
HBFC 22B1–1	Great Lakes Chemical Corporation	40,110

[60 FR 24986, May 10, 1995, as amended at 68 FR 2848, Jan. 21, 2003]

§ 82.7 Grant and phase reduction of baseline production and consumption allowances for class I controlled substances.

For each control period specified in the following table, each person is granted the specified percentage of the baseline production and consumption allowances apportioned to him under §§ 82.5 and 82.6 of this subpart.

Control period	Class I substances in groups I and III, (In percent)	Class I substances in group II, (In percent)	Class I substances in group IV (In percent)	Class I substances in group V (In percent)	Class I substances in group VI (In percent)	Class I substances in group VII (In percent)
1994	25	0	50	50	100	100
1995	25	0	15	30	100	100
1996	0	0	0	0	100	0
1997	0	0	0	0	100	0
1998	0	0	0	0	100	0
1999	0	0	0	0	75	0
2000	0	0	0	0	75	0
2001					50	
2002					50	
2003					30	
2004					30	
2005					0	

[65 FR 70803, Nov. 28, 2000]

§ 82.8 Grant of essential use allowances and critical use allowances.

(a) Effective January 1, 1996, persons in the following list are allocated essential-use allowances or exemptions for quantities of a specific class I controlled substance for a specific essential-use (the Administrator reserves

the right to revise the allocations based on future decisions of the Parties).

TABLE I—ESSENTIAL USE ALLOWANCES FOR CALENDAR YEAR 2010

(i) Metered Dose Inhalers (for oral inhalation) for Treatment of Asthma and Chronic Obstructive Pulmonary Disease		
Company	Chemical	2010 Quantity (metric tons)
Armstrong	CFC–11 or CFC–12 or CFC–114.	30.0

(b) A global exemption for class I controlled substances for essential laboratory and analytical uses shall be in effect through December 31, 2014, subject to the restrictions in appendix G of this subpart, and subject to the recordkeeping and reporting requirements at § 82.13(u) through (x). There is no amount specified for this exemption.

(c) Effective January 1, 2005, critical use allowances are apportioned as set forth in paragraph (c)(1) of this section for the exempted production and import of class I, Group VI controlled substances specifically for those approved critical uses listed in appendix L to this subpart for the applicable control period. Every kilogram of production and import in excess of the total number and type of unexpended critical use allowances held for a particular type of use constitutes a separate violation of this subpart. Effective January 1, 2005, critical stock allowances are issued as set forth in paragraph (c)(2) of this section for the sale of class I, Group VI controlled substances from inventory produced or imported before the January 1, 2005 phase-out date specifically for those approved critical uses listed in appendix L to this subpart for the applicable control period.

(1) Allocated critical use allowances granted for specified control period.

Company	2012 Critical use allowances for pre-plant uses * (kilograms)	2012 Critical use allowances for post-harvest uses * (kilograms)
Great Lakes Chemical Corp. A Chemtura Company	425,197	36,499
Albemarle Corp	174,851	15,009
ICL–IP America	96,626	8,294
TriCal, Inc	3,009	258
*Total***	*699,683*	*60,061*

* For production or import of Class I, Group VI controlled substance exclusively for the Pre-Plant or Post-Harvest uses specified in appendix L to this subpart.
** Due to rounding, numbers do not add exactly.

(2) Allocated critical stock allowances granted for specified control period. The following companies are allocated critical stock allowances for 2012 on a pro-rata basis in relation to the inventory held by each.

COMPANY

Albemarle
Degesch America, Inc.
Prosource One
Bill Clark Pest Control, Inc.
Helena Chemical Co.
Trical Inc.
Burnside Services, Inc.
ICL–IP America
Trident Agricultural Products
Cardinal Professional Products
Industrial Fumigant Company
TriEst Ag Group, Inc.
Chemtura Corp.
Pacific Ag Supplies Inc.
Univar
Crop Production Services
Pest Fog Sales Corp.
Western Fumigation
TOTAL—263,082 kilograms

TOTAL—555,200 kilograms

[69 FR 77003, Dec. 23, 2004]

EDITORIAL NOTE: For FEDERAL REGISTER citations affecting § 82.8, see the List of CFR Sections Affected, which appears in the Finding Aids section of the printed volume and at www.fdsys.gov.

§ 82.9 Availability of production allowances in addition to baseline production allowances for class I controlled substances.

(a) Every person apportioned baseline production allowances for class I controlled substances under § 82.5 (a) through (f) of this subpart is also granted Article 5 allowances equal to:

(1) 10 percent of their baseline production allowances listed for class I, Group I, Group III, Group IV, and Group V controlled substances listed under § 82.5 of this subpart for each control period ending before January 1, 1996;

(2) 15 percent of their baseline production allowances for class I, Group VI controlled substances listed under § 82.5 of this subpart for each control period ending before January 1, 2005;

(3) 15 percent of their baseline production allowances for class I, Group II controlled substances listed under § 82.5 of this subpart for each control period beginning January 1, 1994, until January 1, 2003;

(4) 15 percent of their baseline production allowances for Class I, Group IV and Group V controlled substances listed under § 82.5 of this subpart for each control period beginning January 1, 1996 until January 1, 2010;

(b) Effective January 1, 1995, a person allocated Article 5 allowances may produce class I controlled substances for export to Article 5 countries as under § 82.11 and transfer Article 5 allowances as under § 82.12.

(c) A company may increase or decrease its production allowances, its Article 5 allowances by trading with another Party to the Protocol according to the provision under this paragraph (c). A company may increase or decrease its essential-use allowances for CFCs for use in essential MDIs according to the provisions under this paragraph (c). A nation listed in appendix C to this subpart (Parties to the Montreal Protocol) must agree either to transfer to the person for the current control period some amount of production or import that the nation is permitted under the Montreal Protocol or to receive from the person for the current control period some amount of production or import that the person is permitted under this subpart. If the controlled substance is produced under the authority of production allowances and is to be returned to the Party from whom production allowances are received, the request for production allowances shall also be considered a request for consumption allowances under § 82.10(c). If the controlled substance is produced under the authority of production allowances and is to be sold in the United States or to another Party (not the Party from whom the allowances are received), the U.S. company must expend its consumption allowances allocated under §§ 82.6 and 82.7 in order to produce with the additional production allowances.

(1) For trades from a Party, the person must obtain from the principal diplomatic representative in that nation's embassy in the United States a signed document stating that the appropriate authority within that nation has established or revised production limits or essential-use allowance limits for the nation to equal the lesser of the maximum production that the nation is allowed under the Protocol minus the amount transferred, the maximum production or essential-use allowances that are allowed under the nation's applicable domestic law minus the amount transferred, or the average of the nation's actual national production level for the three years prior to the transfer minus the production transferred. The person must submit to the Administrator a transfer request that includes a true copy of this document and that sets forth the following:

(i) The identity and address of the person;

(ii) The identity of the Party;

(iii) The names and telephone numbers of contact persons for the person and for the Party;

(iv) The chemical type, type of allowance being transferred, and the level of allowances being transferred;

(v) The control period(s) to which the transfer applies; and

(vi) For increased production intended for export to the Party from whom the allowances would be received, a signed statement of intent to export to the Party.

(vii) In the case of transferring essential-use allowances, the transferor must include a signed document from

the transferee identifying the CFC MDI products that will be produced using the essential-use allowances.

(2) For trades to a Party, a person must submit a transfer request that sets forth the following:

(i) The identity and address of the person;

(ii) The identity of the Party;

(iii) The names and telephone numbers of contact persons for the person and for the Party;

(iv) The chemical type, type of allowance being transferred, and the level of allowances being transferred; and

(v) The control period(s) to which the transfer applies.

(3) After receiving a transfer request that meets the requirements of paragraph (c)(2) of this section, the Administrator may, at his discretion, consider the following factors in deciding whether to approve such a transfer:

(i) Possible creation of economic hardship;

(ii) Possible effects on trade;

(iii) Potential environmental implications; and

(iv) The total amount of unexpended production or essential-use allowances held by a U.S. entity.

(v) In the case of transfer of essential-use allowances the Administrator may consider whether the CFCs will be used for production of essential MDIs.

(4) The Administrator will issue the person a notice either granting or deducting production allowances, Article 5 allowances, or essential-use allowances, and specifying the control period to which the transfer applies, provided that the request meets the requirement of paragraph (c)(1) of this sections for trades from Parties and paragraph (c)(2) of this section for trades to Parties, unless the Administrator has decided to disapprove the trade under paragraph (c)(3) of this section. For a trade from a Party, the Administrator will issue a notice that revises the allowances held by the person to equal the unexpended production, Article 5, or essential-use allowances held by the person under this subpart plus the level of allowable production transferred from the Party. For a trade to a Party, the Administrator will issue a notice that revises the production limit for the person to equal the lesser of:

(i) The unexpended production allowances, essential-use allowances, or Article 5 allowances held by the person under this subpart minus the amount transferred; or

(ii) The unexpended production allowances, essential-use allowances, or Article 5 allowances held by the person under this subpart minus the amount by which the United States average annual production of the controlled substance being traded for the three years prior to the transfer is less than the total production allowable for that substance under this subpart minus the amount transferred. The change in allowances will be effective on the date that the notice is issued.

(5) If after one person obtains approval for a trade of allowable production of a controlled substance to a Party, one or more other persons obtain approval for trades involving the same controlled substance and the same control period, the Administrator will issue notices revising the production limits for each of the other persons trading that controlled substance in that control period to equal the lesser of:

(i) The unexpended production allowances or Article 5 allowances held by the person under this subpart minus the amount transferred; or

(ii) The unexpended production allowances or Article 5 allowances held by the person under this subpart minus the amount by which the United States average annual production of the controlled substance being traded for the three years prior to the transfer is less than the total allowable production for that substance under this subpart multiplied by the amount transferred divided by the total amount transferred by all the other persons trading the same controlled substance in the same control period minus the amount transferred by that person.

(iii) The Administrator will also issue a notice revising the production limit for each person who previously obtained approval of a trade of that substance in that control period to equal the unexpended production allowances or unexpended Article 5 allowances held by the person under this

subpart plus the amount by which the United States average annual production of the controlled substance being traded for the three years prior to the transfer is less than the total allowable production under this subpart multiplied by the amount transferred by that person divided by the amount transferred by all of the persons who have traded that controlled substance in that control period. The change in production allowances or Article 5 allowances will be effective on the date that the notice is issued.

(d) Effective January 1, 1996, there will be no trade in production or consumption allowances with other Parties to the Protocol for class I controlled substances, except for class I, Group VI, methyl bromide.

(e) Until January 1, 1996 for all class I controlled substances, except Group VI, and until January 1, 2005 for class I, Group VI, a person may obtain production allowances for that controlled substance equal to the amount of that controlled substance produced in the United States that was transformed or destroyed within the United States, or transformed or destroyed by a person of another Party, in the cases where production allowances were expended to produce such substance in the U.S. in accordance with the provisions of this paragraph. A request for production allowances under this section will be considered a request for consumption allowances under § 82.10(b).

(1) Until January 1, 1996, for all class I controlled substances, except Group VI, and until January 1, 2005, for class I, Group VI, a person must submit a request for production allowances that includes the following:

(i) The name, address, and telephone number of the person requesting the allowances, and the Employer Identification Number if the controlled substance is being exported;

(ii) The name, quantity, and level of controlled substance transformed or the name, quantity and volume destroyed, and the commodity code if the substance was exported;

(iii) A copy of the invoice or receipt documenting the sale of the controlled substance, including the name, address, contact person and telephone number of the transformer or destroyer;

(iv) A certification that production allowances were expended for the production of the controlled substance, and the date of purchase, if applicable;

(v) If the controlled substance is transformed, the name, quantity, and verification of the commercial use of the resulting chemical and a copy of the IRS certificate of intent to use the controlled substance as a feedstock; and,

(vi) If the controlled substance is destroyed, the verification of the destruction efficiency.

(2) Until January 1, 1996 for all class I controlled substances, except Group VI, and until January 1, 2005, for class I, Group VI, the Administrator will review the information and documentation submitted under paragraph (e)(1) of this section and will assess the quantity of class I controlled substance that the documentation and information verifies was transformed or destroyed. The Administrator will issue the person production allowances equivalent to the controlled substances that the Administrator determines were transformed or destroyed. For controlled substances completely destroyed under this rule, the Agency will grant allowances equal to 100 percent of volume intended for destruction. For those controlled substances destroyed at less than a 98 percent destruction efficiency, the Agency will grant allowances commensurate with that percentage of destruction efficiency that is actually achieved. The grant of allowances will be effective on the date that the notice is issued.

(3) Until January 1, 1996 for all class I controlled substances, except Group VI, and until January 1, 2005, for class I, Group VI, if the Administrator determines that the request for production allowances does not satisfactorily substantiate that the person transformed or destroyed controlled substances as claimed, or that modified allowances were not expended, the Administrator will issue a notice disallowing the request for additional production allowances. Within ten working days after receipt of notification, the person may file a notice of appeal, with supporting reasons, with the Administrator. The Administrator may affirm the disallowance or grant an allowance, as

she/he finds appropriate in light of the available evidence. If no appeal is taken by the tenth day after notification, the disallowance will be final on that day.

(f) Effective January 1, 1996, and until January 1, 2000, a person who was nominated by the United States to the Secretariat of the Montreal Protocol for an essential use exemption may obtain destruction and transformation credits for a class I controlled substance (except class I, Group VI) equal to the amount of that controlled substance produced in the United States that was destroyed or transformed within the United States in cases where the controlled substance was produced for other than destruction or transformation in accordance with the provisions of this subpart, subtracting an offset of 15 percent.

(1) Effective January 1, 1996, and until January 1, 2000, a person must submit a request for destruction and transformation credits that includes the following:

(i) The identity and address of the person and the essential-use exemption and years for which the person was nominated to the Secretariat of the Montreal Protocol;

(ii) The name, quantity and volume of controlled substance destroyed or transformed;

(iii) A copy of the invoice or receipt documenting the sale or transfer of the controlled substance to the person;

(iv) A certification of the previous use of the controlled substance;

(v) For destruction credits, a certification that the controlled substance was destroyed and a certification of the efficiency of the destruction process; and

(vi) For transformation credits, an IRS certificate of feedstock use or transformation of the controlled substance.

(2) Effective January 1, 1996, and until January 1, 2000, the Administrator will issue the person destruction and transformation credits equivalent to the class I controlled substance (except class I, Group VI) recovered from a use system in the United States, that the Administrator determines were destroyed or transformed, subtracting the offset of 15 percent. For controlled substances completely destroyed under this rule, the Agency will grant destruction credits equal to 100 percent of volume destroyed minus the offset. For those controlled substances destroyed at less than a 98 percent destruction efficiency, the Agency will grant destruction credits commensurate with that percentage of destruction efficiency that is actually achieved minus the offset. The grant of credits will be effective on the date that the notice is issued.

(3) Effective January 1, 1996, and until January 1, 2000, if the Administrator determines that the request for destruction and transformation credits does not satisfactorily substantiate that the person was nominated for an essential-use exemption by the United States to the Secretariat for the Montreal Protocol for the control period, or that the person destroyed or transformed a class I controlled substance as claimed, or that the controlled substance was not recovered from a U.S. use system the Administrator will issue a notice disallowing the request for additional destruction and transformation credits. Within ten working days after receipt of notification, the person may file a notice of appeal, with supporting reasons, with the Administrator. The Administrator may affirm the disallowance or grant an allowance, as she/he finds appropriate in light of the available evidence. If no appeal is taken by the tenth day after notification, the disallowance will be final on that day.

(g) *International transfer of essential-use CFCs.* (1) For trades of essential-use CFCs where the transferee or the transferor is a person in another nation (Party), the persons involved in the transfer must submit the information requested in §82.12(d)(2) and (d)(3), along with a signed document from the principal diplomatic representative in the Party's embassy in the United States stating that the appropriate authority within that nation has approved the transfer of the essential-use CFCs.

(2) If the transfer claim is complete, and EPA does not object to the transfer, then EPA will issue letters to the transferor and the transferee indicating that the transfer may proceed.

EPA reserves the right to disallow a transfer if the transfer request is incomplete, or if it has reason to believe that the transferee plans to produce MDIs that are not essential MDIs. If EPA objects to the transfer, EPA will issue letters to the transferor and transferee stating the basis for disallowing the transfer. The burden of proof is placed on the transferee to retain sufficient records to prove that the transferred essential-use CFCs are used only for production of essential MDIs. If EPA ultimately finds that the transferee did not use the essential-use CFCs for production of essential MDIs then the transferee is in violation of this subpart.

[60 FR 24986, May 10, 1995, as amended at 63 FR 41643, Aug. 4, 1998; 63 FR 53290, Oct. 5, 1998; 65 FR 70804, Nov. 28, 2000; 67 FR 6360, Feb. 11, 2002; 67 FR 21134, Apr. 29, 2002; 70 FR 77047, Dec. 29, 2005]

§ 82.10 Availability of consumption allowances in addition to baseline consumption allowances for class I controlled substances.

(a) Until January 1, 1996 for all class I controlled substances, except Group VI, and until January 1, 2005, for class I, Group VI, any person may obtain, in accordance with the provisions of this subsection, consumption allowances equivalent to the level of class I controlled substances (other than used controlled substances or transhipments) that the person has exported from the United States and its territories to a Party (as listed in appendix C to this subpart).

(1) Until January 1, 1996 for all class I controlled substances, except Group VI, and until January 1, 2005, for class I, Group VI, to receive consumption allowances in addition to baseline consumption allowances, the exporter of the class I controlled substances must submit to the Administrator a request for consumption allowances setting forth the following:

(i) The identities and addresses of the exporter and the recipient of the exports;

(ii) The exporter's Employer Identification Number;

(iii) The names and telephone numbers of contact persons for the exporter and the recipient;

(iv) The quantity and type of controlled substances exported;

(v) The source of the controlled substance and the date purchased;

(vi) The date on which, and the port from which, the controlled substances were exported from the United States or its territories;

(vii) The country to which the controlled substances were exported;

(viii) A copy of the bill of lading and the invoice indicating the net quantity of controlled substances shipped and documenting the sale of the controlled substances to the purchaser.

(ix) The commodity code of the controlled substance exported; and

(x) Written statement from the producer that the controlled substance was produced with expended allowances.

(2) The Administrator will review the information and documentation submitted under paragraph (a)(1) of this section and will assess the quantity of controlled substances that the documentation verifies was exported. The Administrator will issue the exporter consumption allowances equivalent to the level of controlled substances that the Administrator determined were exported. The grant of the consumption allowances will be effective on the date the notice is issued. If the Administrator determines that the information and documentation does not satisfactorily substantiate that the person exported controlled substances as claimed the Administrator will issue a notice that the consumption allowances are not granted.

(b) Until January 1, 1996, a person may obtain consumption allowances for a class I controlled substance (and until January 1, 2005 for class I, Group VI) equal to the amount of a controlled substance either produced in, or imported into, the United States that was transformed or destroyed in the case where consumption allowances were expended to produce or import such substance in accordance with the provisions of this paragraph. However, a person producing or importing a controlled substance (except class I, Group VI) that was transformed or destroyed must submit to the Administrator the information described under § 82.13 (f)(3) (i) and (ii).

(c) A company may also increase its consumption allowances by receiving production from another Party to the Protocol for class I, Group I through Group V and Group VII controlled substances until January 1, 1996 and for class I, Group VI controlled substances until January 1, 2005. A nation listed in appendix C to this subpart (Parties to the Montreal Protocol) must agree to transfer to the person for the current control period some amount of production that the nation is permitted under the Montreal Protocol. If the controlled substance is to be returned to the Party from whom allowances are received, the request for consumption allowances shall also be considered a request for production allowances under §82.9(c). For trades from a Party, the person must obtain from the principal diplomatic representative in that nation's embassy in the United States a signed document stating that the appropriate authority within that nation has established or revised production limits for the nation to equal the lesser of the maximum production that the nation is allowed under the Protocol minus the amount transferred, the maximum production that is allowed under the nation's applicable domestic law minus the amount transferred, or the average of the nation's actual national production level for the three years prior to the transfer minus the production allowances transferred. The person must submit to the Administrator a transfer request that includes a true copy of this document and that sets forth the following:

(1) The identity and address of the person;

(2) The identity of the Party;

(3) The names and telephone numbers of contact persons for the person and for the Party;

(4) The chemical type and level of production being transferred;

(5) The control period(s) to which the transfer applies; and

(6) For increased production intended for export to the Party from whom allowances would be received, a signed statement of intent to export to this Party.

(d) On the first day of each control period, until January 1, 1996, the Agency will grant consumption allowances to any person that produced and exported a Group IV controlled substance in the baseline year and that was not granted baseline consumption allowances under §82.5.

(1) The number of consumption allowances any such person will be granted for each control period will be equal to the number of production allowances granted to that person under §82.7 for that control period.

(2) Any person granted allowances under this paragraph must hold the same number of unexpended consumption allowances for the control period for which the allowances were granted by February 15 of the following control period. Every kilogram by which the person's unexpended consumption allowances fall short of the amount the person was granted under this paragraph constitutes a separate violation.

[60 FR 24986, May 10, 1995, as amended at 65 FR 70804, Nov. 28, 2000]

§82.11 Exports of class I controlled substances to Article 5 Parties.

(a) If apportioned Article 5 allowances under §82.9(a) or §82.11(a)(2), a person may produce Class I controlled substances, in accordance with the prohibitions in §82.4 and the reduction schedule in §82.11(a)(3), to be exported (not including exports resulting in transformation or destruction, or exports of used controlled substances) to foreign states listed in appendix E to this subpart (Article 5 countries).

(1) A person must submit a notice to the Administrator of exports to Article 5 countries (except exports resulting in transformation or destruction, or used controlled substances) at the end of the quarter that includes the following:

(i) The identities and addresses of the exporter and the Article 5 country recipient of the exports;

(ii) The exporter's Employee Identification Number;

(iii) The names and telephone numbers of contact persons for the exporter and for the recipient;

(iv) The quantity and the type of controlled substances exported, its source and date purchased;

(v) The date on which, and the port from which, the controlled substances were exported from the United States or its territories;

(vi) The Article 5 country to which the controlled substances were exported;

(vii) A copy of the bill of lading and invoice indicating the net quantity shipped and documenting the sale of the controlled substances to the Article 5 purchaser;

(viii) The commodity code of the controlled substance exported; and

(ix) A copy of the invoice or sales agreement covering the sale of the controlled substances to the recipient Article 5 country that contains provisions forbidding the reexport of the controlled substance in bulk form and subjecting the recipient or any transferee of the recipient to liquidated damages equal to the resale price of the controlled substances if they are reexported in bulk form.

(2) Persons who reported exports of Class I, Group I controlled substances to Article 5 countries in 2000–2003 are apportioned baseline Article 5 allowances as set forth in § 82.11(a)(2)(i). Persons who reported exports of Class I, Group VI controlled substances to Article 5 countries in 1995–1998 are apportioned baseline Article 5 allowances as set forth in § 82.11(a)(2)(ii)).

(i) For Group I Controlled Substances

Controlled Substance	Person	Allowances (kg)
CFC–11	Honeywell	7,150
	Sigma Aldrich	1
CFC–113	Fisher Scientific	5
	Honeywell	313,686
	Sigma Aldrich	48
CFC–114	Honeywell	24,798
	Sigma Aldrich	1

(ii) For Group VI Controlled Substances

Controlled Substance	Person	Allowances (kg)
Methyl Bromide	Albemarle	1,152,714
	Ameribrom	176,903
	Great Lakes Chemical Corporation.	3,825,846

(3) Phased Reduction Schedule for Article 5 Allowances allocated in § 82.11. For each control period specified in the following table, each person is granted the specified percentage of the baseline Article 5 allowances apportioned under § 82.11.

Control Period	Class I substances in group I (In percent)	Class I substances in group VI (In percent)
2006	50	80
2007	15	80
2008	15	80
2009	15	80
2010	0	80
2011	0	80
2012	0	80
2013	0	80
2014	0	80
2015	0	0

(2) [Reserved]

(b) [Reserved]

[60 FR 24986, May 10, 1995, as amended at 70 FR 77047, Dec. 29, 2005]

§ 82.12 Transfers of allowances for class I controlled substances.

(a) *Inter-company transfers.* (1) Until January 1, 1996, for all class I controlled substances, except for Group VI, and until January 1, 2005, for Group VI, any person (''transferor'') may transfer to any other person (''transferee'') any amount of the transferor's consumption allowances or production allowances, and effective January 1, 1995, for all class I controlled substances any person (''transferor'') may transfer to any other person (''transferee'') any amount of the transferor's Article 5 allowances. After January 1, 2002, any essential-use allowance holder (including those persons that hold essential-use allowances issued by a Party other than the United States) (''transferor'') may transfer essential-use allowances for CFCs to a metered dose inhaler company solely for the manufacture of essential MDIs. After January 1, 2005, any critical use allowance holder (''transferor'') may transfer critical use allowances to any other person (''transferee''). After January 1, 2005, any critical stock allowance holder (''transferor'') may transfer critical stock allowances to any critical stock allowance holder or any methyl bromide producer, importer, distributer or third party applicator (''transferee'').

(i) The transferor must submit to the Administrator a transfer claim setting forth the following:

(A) The identities and addresses of the transferor and the transferee;

(B) The name and telephone numbers of contact persons for the transferor and the transferee;

(C) The type of allowances being transferred, including the names of the controlled substances for which allowances are to be transferred;

(D) The group of controlled substances to which the allowances being transferred pertains;

(E) The amount of allowances being transferred;

(F) The control period(s) for which the allowances are being transferred;

(G) The amount of unexpended allowances of the type and for the control period being transferred that the transferor holds under authority of this subpart as of the date the claim is submitted to EPA; and

(H) The one percent offset applied to the unweighted amount traded will be deducted from the transferor's production or consumption allowance balance (except for trades from transformers and destroyers to producers or importers for the purpose of allowance reimbursement). In the case of transferring essential use allowances, the amount of one tenth of one percent of the amount traded will be deducted from the transferor's allowance balance. In the case of transferring critical use allowances, the amount of one tenth of one percent of the amount traded will be deducted from the transferor's critical use allowance balance.

(I) The transferor must include a signed document from the transferee identifying the CFC MDI products that will be produced using the essential-use allowances.

(ii) The Administrator will determine whether the records maintained by EPA, taking into account any previous transfers and any production, allowable imports and exports of controlled substances reported by the transferor, indicate that the transferor possesses, as of the date the transfer claim is processed, unexpended allowances sufficient to cover the transfer claim (*i.e.*, the amount to be transferred plus, in the case of transferors of essential use allowances and critical use allowances, one tenth of one percent of the transferred amount). Within three working days of receiving a complete transfer claim, the Administrator will take action to notify the transferor and transferee as follows:

(A) If EPA's records show that the transferor has sufficient unexpended allowances to cover the transfer claim, the Administrator will issue a notice indicating that EPA does not object to the transfer and will reduce the transferor's balance of unexpended allowances by the amount to be transferred plus, in the case of transfers of production or consumption allowances, one percent of that amount, or in the case of transfers of essential use allowances, one tenth of one percent of that amount. When EPA issues a no objection notice, the transferor and the transferee may proceed with the transfer. However, if EPA ultimately finds that the transferor did not have sufficient unexpended allowances to cover the claim, the transferor and transferee will be held liable for any violations of the regulations of this subpart that occur as a result of, or in conjunction with, the improper transfer.

(B) If EPA's records show that the transferor has insufficient unexpended allowances to cover the transfer claim, or that the transferor has failed to respond to one or more Agency requests to supply information needed to make a determination, the Administrator will issue a notice disallowing the transfer. Within 10 working days after receipt of notification, either party may file a notice of appeal, with supporting reasons, with the Administrator. The Administrator may affirm or vacate the disallowance. If no appeal is taken by the tenth working day after notification, the disallowance shall be final on that day.

(iii) In the event that the Administrator does not respond to a transfer claim within the three working days specified in paragraph (a)(1)(ii) of this section the transferor and transferee may proceed with the transfer. EPA will reduce the transferor's balance of unexpended allowances by the amount to be transferred plus, in the case of transfers of production or consumption allowances, one percent of that amount, and in the case of essential use allowances and critical use allowances, one tenth of one percent of that amount. However if EPA ultimately finds that the transferor did not have

sufficient unexpended allowances to cover the claim, the transferor and transferee will be held liable for any violations of the regulations of this subpart that occur as a result of, or in conjunction with, the improper transfer.

(2) Effective January 1, 1996, any person (''transferor'') may transfer to an eligible person (''transferee'') as defined in § 82.9 any amount of the transferor's destruction and transformation credits. The transfer proceeds as follows:

(i) The transferor must submit to the Administrator a transfer claim setting forth the following:

(A) The identities and addresses of the transferor and the transferee;

(B) The name and telephone numbers of contact persons for the transferor and the transferee;

(C) The type of credits being transferred, including the names of the controlled substances for which credits are to be transferred;

(D) The group of controlled substances to which the credits being transferred pertains;

(E) The amount of destruction and transformation credits being transferred;

(F) The control period(s) for which the destruction and transformation credits are being transferred;

(G) The amount of unexpended destruction and transformation credits for the control period being transferred that the transferor holds under authority of this subpart as of the date the claim is submitted to EPA; and

(H) The amount of the one-percent offset applied to the unweighted amount traded that will be deducted from the transferor's balance.

(ii) The Administrator will determine whether the records maintained by EPA, taking into account any previous transfers and any production of controlled substances reported by the transferor, indicate that the transferor possesses, as of the date the transfer claim is processed, unexpended destruction and transformation credits sufficient to cover the transfer claim (i.e., the amount to be transferred plus one percent of that amount). Within three working days of receiving a complete transfer claim, the Administrator will take action to notify the transferor and transferee as follows:

(A) If EPA's records show that the transferor has sufficient unexpended destruction and transformation credits to cover the transfer claim, the Administrator will issue a notice indicating that EPA does not object to the transfer and will reduce the transferor's balance of unexpended or credits by the amount to be transferred plus one percent of that amount. When EPA issues a no objection notice, the transferor and the transferee may proceed with the transfer. However, if EPA ultimately finds that the transferor did not have sufficient unexpended credits to cover the claim, the transferor and transferee will be held liable for any violations of the regulations of this subpart that occur as a result of, or in conjunction with, the improper transfer.

(B) If EPA's records show that the transferor has insufficient unexpended destruction and transformation credits to cover the transfer claim, or that the transferor has failed to respond to one or more Agency requests to supply information needed to make a determination, the Administrator will issue a notice disallowing the transfer. Within 10 working days after receipt of notification, either party may file a notice of appeal, with supporting reasons, with the Administrator. The Administrator may affirm or vacate the disallowance. If no appeal is taken by the tenth working day after notification, the disallowance shall be final on that day.

(iii) In the event that the Administrator does not respond to a transfer claim within the three working days specified in paragraph (a)(2)(ii) of this section, the transferor and transferee may proceed with the transfer. EPA will reduce the transferor's balance of unexpended destruction and transformation credits by the amount to be transferred plus one percent of that amount. However, if EPA ultimately finds that the transferor did not have sufficient unexpended credits to cover the claim, the transferor and transferee will be held liable for any violations of the regulations of this subpart that occur as a result of, or in conjunction with, the improper transfer.

(b) Inter-pollutant conversions.

(1) Until January 1, 1996, for all class I controlled substances, except Group VI, and until January 1, 2005 for Group VI, any person (''convertor'') may convert consumption allowances or production allowances for one class I controlled substance to the same type of allowance for another class I controlled substance within the same Group as the first as listed in appendix A of this subpart, following the procedures described in paragraph (b)(4) of this section.

(2) Effective January 1, 1995, any person (''convertor'') may convert Article 5 allowances for one class I controlled substance to the same type of allowance for another class I controlled substance within the same Group of controlled substances as the first as listed in appendix A of this subpart, following the procedures described in paragraph (b)(4) of this section.

(3) Effective January 1, 1996, any person (''convertor'') may convert destruction and/or transformation credits for one class I controlled substance to the same type of credits for another class I controlled substance within the same Group of controlled substances as the first as listed in appendix A of this subpart, following the procedures in paragraph (b)(4) of this section.

(4) The convertor must submit to the Administrator a conversion claim.

(i) The conversion claim would include the following:

(A) The identity and address of the convertor;

(B) The name and telephone number of a contact person for the convertor;

(C) The type of allowances or credits being converted, including the names of the controlled substances for which allowances or credits are to be converted;

(D) The group of controlled substances to which the allowances or credits being converted pertains;

(E) The amount and type of allowances or credits to be converted;

(F) The amount of allowances or credits to be subtracted from the convertor's unexpended allowances or credits for the first controlled substance, to be equal to 101 percent of the amount of allowances or credits converted;

(G) The amount of allowances or credits to be added to the convertor's unexpended allowances or credits for the second controlled substance, to be equal to the amount of allowances or credits for the first controlled substance being converted multiplied by the quotient of the ozone depletion factor of the first controlled substance divided by the ozone depletion factor of the second controlled substance, as listed in appendix A to this subpart;

(H) The control period(s) for which the allowances or credits are being converted; and

(I) The amount of unexpended allowances or credits of the type and for the control period being converted that the convertor holds under authority of this subpart as of the date the claim is submitted to EPA.

(ii) The Administrator will determine whether the records maintained by EPA, taking into account any previous conversions, any transfers, any credits, and any production, imports (not including transhipments or used controlled substances), or exports (not including transhipments or used controlled substances) of controlled substances reported by the convertor, indicate that the convertor possesses, as of the date the conversion claim is processed, unexpended allowances or credits sufficient to cover the conversion claim (i.e., the amount to be converted plus one percent of that amount). Within three working days of receiving a complete conversion claim, the Administrator will take action to notify the convertor as follows:

(A) If EPA's records show that the convertor has sufficient unexpended allowances or credits to cover the conversion claim, the Administrator will issue a notice indicating that EPA does not object to the conversion and will reduce the convertor's balance of unexpended allowances or credits by the amount to be converted plus one percent of that amount. When EPA issues a no objection notice, the convertor may proceed with the conversion. However, if EPA ultimately finds that the convertor did not have sufficient unexpended allowances or credits to cover the claim, the convertor will be held

liable for any violations of the regulations of this subpart that occur as a result of, or in conjunction with, the improper conversion.

(B) If EPA's records show that the convertor has insufficient unexpended allowances or credits to cover the conversion claim, or that the convertor has failed to respond to one or more Agency requests to supply information needed to make a determination, the Administrator will issue a notice disallowing the conversion. Within 10 working days after receipt of notification, the convertor may file a notice of appeal, with supporting reasons, with the Administrator. The Administrator may affirm or vacate the disallowance. If no appeal is taken by the tenth working day after notification, the disallowance shall be final on that day.

(iii) In the event that the Administrator does not respond to a conversion claim within the three working days specified in paragraph (b)(4)(ii) of this section, the convertor may proceed with the conversion. EPA will reduce the convertor's balance of unexpended allowances or credits by the amount to be converted plus one percent of that amount. However, if EPA ultimately finds that the convertor did not have sufficient unexpended allowances or credits to cover the claims, the convertor will be held liable for any violations of the regulations of this subpart that occur as a result of, or in conjunction with, the improper conversion.

(5) Effective January 1, 1995, and for every control period thereafter, inter-pollutant trades will be permitted during the 45 days after the end of a control period.

(c) Inter-company transfers and Inter-pollutant conversions.

(1) Until January 1, 1996, for production and consumption allowances; effective January 1, 1995, for Article 5 allowances; and effective January 1, 1996, for destruction and/or transformation credits; if a person requests an inter-company transfer and an inter-pollutant conversion simultaneously, the amount subtracted from the convertor-transferor's unexpended allowances or unexpended credits for the first controlled substance will be equal to 101 percent of the amount of allowances or credits that are being converted and transferred.

(2) [Reserved]

(d) *Transfers of essential-use CFCs.* (1) Effective January 1, 2002, any metered dose inhaler company (transferor) may transfer essential-use CFCs to another metered dose inhaler company (transferee) provided that the Administrator approves the transfer.

(2) The transferee must submit a transfer claim to the Administrator for approval before the transfer can take place. The transfer claim must set forth the following:

(i) The identities and addresses of the transferor and the transferee; and

(ii) The name and telephone numbers of contact persons for the transferor and the transferee; and

(iii) The amount of each controlled substance (CFC-11, CFC-12, or CFC-114) being transferred; and

(iv) The specific metered dose inhaler products (i.e. the MDI drug product or active moiety) that the transferee plans to produce with the transferred CFCs; and

(v) The country(ies) where the CFC metered dose inhalers produced with the transferred essential-use CFCs will be sold if other than in the United States; and

(vi) Certification that the essential-use CFCs will be used in the production of essential MDIs. If the MDIs are to be sold in the United States, the certification must state that MDIs produced with the transferred essential-use CFCs are listed as essential at 21 CFR 2.125, and were approved by the Food and Drug Administration before December 31, 2000. If the MDIs produced with the essential-use CFCs are to be sold outside the United States, the transferee must certify that the metered dose inhalers produced with the essential-use CFCs are considered essential by the importing country.

(3) The transferor must submit a letter stating that it concurs with the terms of the transfer as requested by the transferee.

(4) Once the transfer claim is complete, and if EPA does not object to the transfer, then EPA will issue letters to the transferor and the transferee within 10 business days indicating that the transfer may proceed. EPA reserves the

right to disallow a transfer if the transfer request is incomplete, or if it has reason to believe that the transferee plans use the essential-use CFCs in anything other than essential MDIs. If EPA objects to the transfer, within EPA will issue letters to the transferor and transferee stating the basis for disallowing the transfer. The burden of proof is placed on the transferee to retain sufficient records to prove that the transferred essential-use CFCs are used only for production of essential MDIs. If EPA ultimately finds that the transferee did not use the essential-use CFCs for production of essential MDIs then the transferee is in violation of this subpart.

(e) Exchange of Critical Use Allowances for Critical Stock Allowances. (1) Critical use allowance holders may petition the Administrator to exchange a quantity of their unexpended critical use allowances for an equivalent amount of critical stock allowances. A person allocated critical stock allowances may not petition to exchange unexpended critical stock allowances for critical use allowances.

(2) [Reserved]

[60 FR 24986, May 10, 1995, as amended at 65 FR 70804, Nov. 28, 2000; 66 FR 1471, Jan. 8, 2001; 67 FR 6361, Feb. 11, 2002; 69 FR 77004, Dec. 23, 2004]

§ 82.13 Recordkeeping and reporting requirements for class I controlled substances.

(a) Unless otherwise specified, the recordkeeping and reporting requirements set forth in this section take effect on January 1, 1995. For class I, Group VIII controlled substances, the recordkeeping and reporting requirements set forth in this section take effect on August 18, 2003. For class I, Group VI critical use methyl bromide, the recordkeeping and reporting requirements set forth in this section take effect January 1, 2005.

(b) Reports and records required by this section may be used for purposes of compliance determinations. These requirements are not intended as a limitation on the use of other evidence admissible under the Federal Rules of Evidence. Failure to provide the reports, petitions and records required by this section, and to certify the accuracy of the information in the reports, petitions and records required by this section, will be considered a violation of this subpart. False statements made in reports, petitions and records will be considered violations of Section 113 of the Clean Air Act.

(c) Unless otherwise specified, reports required by this section must be mailed to the Administrator within 45 days of the end of the applicable reporting period.

(d) Records and copies of reports required by this section must be retained for three years.

(e) In reports required by this section, quantities of controlled substances must be stated in terms of kilograms.

(f) Every person (''producer'') who produces class I controlled substances during a control period must comply with the following recordkeeping and reporting requirements:

(1) Within 120 days of May 10, 1995, or within 120 days of the date that a producer first produces a class I controlled substance, whichever is later, and within 120 days of July 18, 2003 for class I, Group VIII controlled substances, every producer who has not already done so must submit to the Administrator a report describing:

(i) The method by which the producer in practice measures daily quantities of controlled substances produced;

(ii) Conversion factors by which the daily records as currently maintained can be converted into kilograms of controlled substances produced, including any constants or assumptions used in making those calculations (e.g., tank specifications, ambient temperature or pressure, density of the controlled substance);

(iii) Internal accounting procedures for determining plant-wide production;

(iv) The quantity of any fugitive losses accounted for in the production figures; and

(v) The estimated percent efficiency of the production process for the controlled substance. Within 60 days of any change in the measurement procedures or the information specified in the above report, the producer must submit a report specifying the revised data or procedures to the Administrator.

(2) Every producer of a class I controlled substance during a control period must maintain the following records:

(i) Dated records of the quantity of each controlled substance produced at each facility;

(ii) Dated records of the quantity of controlled substances produced for use in processes that result in their transformation or for use in processes that result in their destruction and quantity sold for use in processes that result in their transformation or for use in processes that result in their destruction;

(iii) Dated records of the quantity of controlled substances produced for an essential-use and quantity sold for use in an essential-use process;

(iv) Dated records of the quantity of controlled substances produced with expended destruction and/or transformation credits;

(v) Dated records of the quantity of controlled substances produced with Article 5 allowances;

(vi) Copies of invoices or receipts documenting sale of controlled substance for use in processes resulting in their transformation or for use in processes resulting in destruction;

(vii) Dated records of the quantity of each controlled substance used at each facility as feedstocks or destroyed in the manufacture of a controlled substance or in the manufacture of any other substance, and any controlled substance introduced into the production process of the same controlled substance at each facility;

(viii) Dated records identifying the quantity of each chemical not a controlled substance produced within each facility also producing one or more controlled substances;

(ix) Dated records of the quantity of raw materials and feedstock chemicals used at each facility for the production of controlled substances;

(x) Dated records of the shipments of each controlled substance produced at each plant;

(xi) The quantity of controlled substances, the date received, and names and addresses of the source of used materials containing controlled substances which are recycled or reclaimed at each plant;

(xii) Records of the date, the controlled substance, and the estimated quantity of any spill or release of a controlled substance that equals or exceeds 100 pounds;

(xiii) Internal Revenue Service Certificates in the case of transformation, or the destruction verification in the case of destruction (as in § 82.13(k)), showing that the purchaser or recipient of a controlled substance, in the United States or in another country that is a Party, certifies the intent to either transform or destroy the controlled substance, or sell the controlled substance for transformation or destruction in cases when production and consumption allowances were not expended;

(xiv) Written verifications that essential-use allowances were conveyed to the producer for the production of specified quantities of a specific controlled substance that will only be used for the named essential-use and not resold or used in any other manufacturing process.

(xv) Written certifications that quantities of controlled substances, meeting the purity criteria in appendix G of this subpart, were purchased by distributors of laboratory supplies or by laboratory customers to be used only in essential laboratory and analytical uses as defined by appendix G, and not to be resold or used in manufacturing.

(xvi) Written verifications from a U.S. purchaser that the controlled substance was exported to an Article 5 country in cases when Article 5 allowances were expended during production; and

(xvii) For class I, Group VI controlled substances, dated records of the quantity of controlled substances produced for quarantine and preshipment applications and quantity sold for quarantine and preshipment applications;

(xviii) Written certifications that quantities of class I, Group VI controlled substances produced solely for quarantine and preshipment applications were purchased by distributors or applicators to be used only for quarantine and preshipment applications in accordance with the definitions in this subpart; and

(xix) Written verifications from a U.S. purchaser that class I, Group VI

controlled substances produced solely for quarantine and preshipment applications, if exported, will be exported solely for quarantine and preshipment applications upon receipt of a certification in accordance with the definitions of this subpart and requirements in paragraph (h) of this section.

(xx) For class I, Group VI controlled substances, dated records such as invoices and order forms, and a log of the quantity of controlled substances produced for critical use, specifying quantities dedicated for pre-plant use and quantities dedicated for post-harvest use, and the quantity sold for critical use, specifying quantities dedicated for pre-plant use and quantities dedicated for post-harvest use;

(xxi) Written certifications that quantities of class I, Group VI controlled substances produced for critical use were purchased by distributors, applicators, or approved critical users to be used or sold only for critical use in accordance with the definitions and prohibitions in this subpart. Certifications must be maintained by the producer for a minimum of three years and;

(xxii) For class I, Group VI controlled substances, dated records such as invoices and order forms, and a log of the quantity of controlled substances produced solely for export to satisfy critical uses authorized by the Parties for that control period, and the quantity sold solely for export to satisfy critical uses authorized by the Parties for that control period.

(3) Reporting Requirements—Producers. For each quarter, except as specified below, each producer of a class I controlled substance must provide the Administrator with a report containing the following information:

(i) The production by company in that quarter of each controlled substance, specifying the quantity of any controlled substance used in processing, resulting in its transformation by the producer;

(ii) The amount of production for use in processes resulting in destruction of controlled substances by the producer;

(iii) The levels of production (expended allowances and credits) for each controlled substance;

(iv) The producer's total of expended and unexpended production allowances, consumption allowances, Article 5 allowances, critical use allowances (pre-plant), critical use allowances (post-harvest), critical stock allowances, and amount of essential-use allowances and destruction and transformation credits conferred at the end of that quarter;

(v) The amount of controlled substance sold or transferred during the quarter to a person other than the producer for use in processes resulting in its transformation or eventual destruction;

(vi) A list of the quantities and names of controlled substances exported, by the producer and or by other U.S. companies, to a Party to the Protocol that will be transformed or destroyed and therefore were not produced expending production or consumption allowances;

(vii) For transformation in the United States or by a person of another Party, one copy of an IRS certification of intent to transform the same controlled substance for a particular transformer and a list of additional quantities shipped to that same transformer for the quarter;

(viii) For destruction in the United States or by a person of another Party, one copy of a destruction verification (as under § 82.13(k)) for a particular destroyer, destroying the same controlled substance, and a list of additional quantities shipped to that same destroyer for the quarter;

(ix) A list of U.S. purchasers of controlled substances that exported to an Article 5 country in cases when Article 5 allowances were expended during production;

(x) A list of the essential-use allowance holders, distributors of laboratory supplies and laboratory customers from whom orders were placed and the quantity of specific essential-use controlled substances requested and produced;

(xi) The certifications from essential-use allowance holders stating that the controlled substances were purchased solely for specified essential uses and will not be resold or used in any other manufacturing process;

(xii) In the case of laboratory essential-uses, certifications from distributors of laboratory supplies that controlled substances were purchased for sale to laboratory customers who certify that the substances will only be used for essential laboratory and analytical uses as defined by appendix G of this subpart, and will not be resold or used in manufacturing; or, if sales are made directly to laboratories, certification from laboratories that the controlled substances will only be used for essential laboratory and analytical uses (defined at appendix G of this subpart) and will not be resold or used in manufacturing.

(xiii) The amount of class I, Group VI controlled substances sold or transferred during the quarter to a person other than the producer solely for quarantine and preshipment applications;

(xiv) A list of the quantities of class I, Group VI controlled substances produced by the producer and exported by the producer and/or by other U.S. companies, to a Party to the Protocol that will be used solely for quarantine and preshipment applications and therefore were not produced expending production or consumption allowances; and

(xv) For quarantine and preshipment applications of class I, Group VI controlled substances in the United States or by a person of another Party, one copy of a certification that the material will be used only for quarantine and preshipment applications in accordance with the definitions in this subpart from each recipient of the material and a list of additional quantities shipped to that same person for the quarter.

(xvi) For critical uses of class I, Group VI controlled substances, producers shall report annually the amount of critical use methyl bromide owned by the reporting entity, specifying quantities dedicated for pre-plant use and quantities dedicated for post-harvest use, as well as quantities held by the reporting entity on behalf of another entity, specifying quantities dedicated for pre-plant use and quantities dedicated for post-harvest use along with the name of the entity on whose behalf the material is held; and

(xvii) A list of the quantities of class I, Group VI controlled substances produced by the producer and exported by the producer and/or by other U.S. companies in that control period, solely to satisfy the critical uses authorized by the Parties for that control period; and

(xviii) On an annual basis, the amount of methyl bromide produced or imported prior to the January 1, 2005, phaseout date owned by the reporting entity, as well as quantities held by the reporting entity on behalf of another entity, specifying the name of the entity on whose behalf the material is held.

(4) For any person who fails to maintain the records required by this paragraph, or to submit the report required by this paragraph, the Administrator may assume that the person has produced at full capacity during the period for which records were not kept, for purposes of determining whether the person has violated the prohibitions at § 82.4.

(g) Importers of class I controlled substances during a control period must comply with record-keeping and reporting requirements specified in this paragraph (g).

(1) Recordkeeping—Importers. Any importer of a class I controlled substance (including used, recycled and reclaimed controlled substances) must maintain the following records:

(i) The quantity of each controlled substance imported, either alone or in mixtures, including the percentage of each mixture which consists of a controlled substance;

(ii) The quantity of those controlled substances imported that are used (including recycled or reclaimed) and, where applicable, the information provided with the petition as under paragraph (g)(2) of this section;

(iii) The quantity of controlled substances other than transhipments or used, recycled or reclaimed substances imported for use in processes resulting in their transformation or destruction and quantity sold for use in processes that result in their destruction or transformation;

(iv) The date on which the controlled substances were imported;

(v) The port of entry through which the controlled substances passed;

(vi) The country from which the imported controlled substances were imported;

(vii) The commodity code for the controlled substances shipped, which must be one of those listed in Appendix K to this subpart;

(viii) The importer number for the shipment;

(ix) A copy of the bill of lading for the import;

(x) The invoice for the import;

(xi) The quantity of imports of used, recycled or reclaimed class I controlled substances and class II controlled substances;

(xii) The U.S. Customs entry form;

(xiii) Dated records documenting the sale or transfer of controlled substances for use in processes resulting in transformation or destruction;

(xiv) Copies of IRS certifications that the controlled substance will be transformed or destruction verifications that it will be destroyed (as in § 82.13(k));

(xv) Dated records of the quantity of controlled substances imported for an essential-use or imported with destruction and transformation credits; and

(xvi) Copies of certifications that imported controlled substances are being purchased for essential laboratory and analytical uses (defined at appendix G of this subpart) or being purchased for eventual sale to laboratories that certify that controlled substances are for essential laboratory and analytical uses (defined at appendix G of this subpart).

(xvii) For class I, Group VI controlled substances, dated records of the quantity of controlled substances imported for quarantine and preshipment applications and quantity sold for quarantine and preshipment applications;

(xviii) Written certifications that quantities of class I, Group VI controlled substances imported solely for quarantine and preshipment applications were purchased by distributors or applicators to be used only for quarantine and preshipment applications in accordance with the definitions in this subpart; and

(xix) Written verifications from a U.S. purchaser that class I, Group VI controlled substances imported solely for quarantine and preshipment applications, if exported, will be exported solely for quarantine and preshipment applications upon receipt of a certification in accordance with the definitions of this Subpart and requirements in paragraph (h) of this section.

(xx) For class I, Group VI controlled substances, dated records such as invoices and order forms, of the quantity of controlled substances imported for critical use, specifying quantities dedicated for pre-plant use and quantities dedicated for post-harvest use, and the quantity sold for critical use, specifying quantities dedicated for pre-plant use and quantities dedicated for post-harvest use, and;

(xxi) Written certifications that quantities of class I, Group VI controlled substances imported for critical use were purchased by distributors, applicators, or approved critical users to be used or sold only for critical use in accordance with the definitions and prohibitions in this subpart. Certifications must be maintained by an importer for a minimum of three years.

(2) Petitioning—Importers of Used, Recycled or Reclaimed Controlled Substances. For each individual shipment over 5 pounds of a used controlled substance as defined in § 82.3, except for Group II used controlled substances shipped in aircraft halon bottles for hydrostatic testing, an importer must submit directly to the Administrator, at least 40 working days before the shipment is to leave the foreign port of export, the following information in a petition:

(i) Name and quantity in kilograms of the used controlled substance to be imported;

(ii) Name and address of the importer, the importer ID number, the contact person, and the phone and fax numbers;

(iii) Name, address, contact person, phone number and fax number of all previous source facilities from which the used controlled substance was recovered;

(iv) A detailed description of the previous use of the controlled substance at each source facility and a best estimate of when the specific controlled substance was put into the equipment at each source facility, and, when possible, documents indicating the date

the material was put into the equipment;

(v) A list of the name, make and model number of the equipment from which the material was recovered at each source facility;

(vi) Name, address, contact person, phone number and fax number of the exporter and of all persons to whom the material was transferred or sold after it was recovered from the source facility;

(vii) The U.S. port of entry for the import, the expected date of shipment and the vessel transporting the chemical. If at the time of submitting a petition the importer does not know the U.S. port of entry, the expected date of shipment and the vessel transporting the chemical, and the importer receives a non-objection notice for the individual shipment in the petition, the importer is required to notify the Administrator of this information prior to the actual U.S. Customs entry of the individual shipment;

(viii) A description of the intended use of the used controlled substance, and, when possible, the name, address, contact person, phone number and fax number of the ultimate purchaser in the United States;

(ix) Name, address, contact person, phone number and fax number of the U.S. reclamation facility, where applicable;

(x) If someone at the source facility recovered the controlled substance from the equipment, the name and phone and fax numbers of that person;

(xi) If the imported controlled substance was reclaimed in a foreign Party, the name, address, contact person, phone number and fax number of any or all foreign reclamation facility(ies) responsible for reclaiming the cited shipment;

(xii) An export license from the appropriate government agency in the country of export and, if recovered in another country, the export license from the appropriate government agency in that country;

(xiii) If the imported used controlled substance is intended to be sold as a refrigerant in the U.S., the name and address of the U.S. reclaimer who will bring the material to the standard required under section 608 (§ 82.152(g)) of the CAA, if not already reclaimed to those specifications; and

(xiv) A certification of accuracy of the information submitted in the petition.

(3) Starting on the first working day following receipt by the Administrator of a petition to import a used class I controlled substance, the Administrator will initiate a review of the information submitted under paragraph (g)(2) of this section and take action within 40 working days to issue either an objection-notice or a non-objection notice for the individual shipment to the person who submitted the petition to import the used class I controlled substance.

(i) For the following reasons, the Administrator may issue an objection notice to a petition:

(A) If the Administrator determines that the information is insufficient, that is, if the petition lacks or appears to lack any of the information required under § 82.13(g)(2);

(B) If the Administrator determines that any portion of the petition contains false or misleading information, or the Administrator has information from other U.S. or foreign government agencies indicating that the petition contains false or misleading information;

(C) If the importer wishes to import a used class I controlled substance from a country which is, for that particular controlled substance, out of compliance regarding its phaseout obligations under the Protocol or the transaction in the petition is contrary to other provisions in the Vienna Convention or the Montreal Protocol;

(D) If the appropriate government agency in the exporting country has not agreed to issue an export license for the cited individual shipment of used controlled substance;

(E) If allowing the import of the used class I controlled substance would run counter to government restrictions from either the country of recovery or export regarding controlled ozone-depleting substances;

(F) If reclamation capacity is installed or is being installed for that specific controlled substance in the country of recovery or country of export and the capacity is funded in full

or in part through the Multilateral Fund.

(ii) Within ten (10) working days after receipt of the objection notice, the importer may re-petition the Administrator, only if the Administrator indicated ''insufficient information'' as the basis for the objection notice. If no appeal is taken by the tenth working day after the date on the objection notice, the objection shall become final. Only one appeal of re-petition will be accepted for any petition received by EPA.

(iii) Any information contained in the re-petition which is inconsistent with the original petition must be identified and a description of the reason for the inconsistency must accompany the re-petition.

(iv) In cases where the Administrator does not object to the petition based on the criteria listed in paragraph (g)(3)(i) of this section, the Administrator will issue a non-objection notice.

(v) To pass the approved used class I controlled substances through U.S. Customs, the petition and the non-objection notice issued by EPA must accompany the shipment through U.S. Customs.

(vi) If for some reason, following EPA's issuance of a non-objection notice, new information is brought to EPA's attention which shows that the non-objection notice was issued based on false information, then EPA has the right to:

(A) Revoke the non-objection notice;

(B) Pursue all means to ensure that the controlled substance is not imported into the United States; and

(C) Take appropriate enforcement actions.

(vii) Once the Administrator issues a non-objection notice, the person receiving the non-objection notice is required to import the individual shipment of used class I controlled substance within the same control period as the date stamped on the non-objection notice.

(viii) A person receiving a non-objection notice from the Administrator for a petition to import used class I controlled substances must maintain the following records:

(A) a copy of the petition;

(B) the EPA non-objection notice;

(C) the bill of lading for the import; and

(D) U.S. Customs entry documents for the import that must include one of the commodity codes from Appendix K to this subpart.

(4) Reporting Requirements—Importers. For each quarter, except as specified below, every importer of a class I controlled substance (including importers of used, recycled or reclaimed controlled substances) must submit to the Administrator a report containing the following information:

(i) Summaries of the records required in paragraphs (g)(1) (i) through (xvi) of this section for the previous quarter;

(ii) The total quantity imported in kilograms of each controlled substance for that quarter;

(iii) The quantity of those controlled substances imported that are used controlled substances.

(iv) The levels of import (expended consumption allowances before January 1, 1996) of controlled substances for that quarter and totaled by chemical for the control-period-to-date;

(vii) The importer's total sum of expended and unexpended consumption allowances by chemical as of the end of that quarter and the total sum of expended and unexpended critical use allowances (pre-plant) and unexpended critical use allowances (post-harvest) and critical stock allowances;

(viii) The amount of controlled substances imported for use in processes resulting in their transformation or destruction;

(ix) The amount of controlled substances sold or transferred during the quarter to each person for use in processes resulting in their transformation or eventual destruction;

(x) The amount of controlled substances sold or transferred during the quarter to each person for an essential use;

(xi) The amount of controlled substances imported with destruction and transformation credits;

(xii) Internal Revenue Service Certificates showing that the purchaser or recipient of imported controlled substances intends to transform those substances or destruction verifications (as in §82.13(k)) showing that purchaser or

recipient intends to destroy the controlled substances; and

(xiii) The certifications from essential-use allowance holders stating that the controlled substances were purchased solely for specified essential-uses and will not be resold or used in manufacturing; and the certifications from distributors of laboratory supplies that the controlled substances were purchased solely for eventual sale to laboratories that certify the controlled substances are for essential laboratory and analytical uses (defined at appendix G of this subpart), or if sales are made directly to laboratories, certifications from laboratories that the controlled substances will only be used for essential laboratory and analytical uses (defined at appendix G of this subpart) and will not be resold or used in manufacturing.

(xiv) In the case of laboratory essential uses, a certification from distributors of laboratory supplies that controlled substances were purchased for sale to laboratory customers who certify that the substances will only be used for laboratory applications and will not be resold or used in manufacturing; and

(xv) The amount of class I, Group VI controlled substance sold or transferred during the quarter to a person other than the importer solely for quarantine and preshipment applications;

(xvi) A list of the quantities of class I, Group VI controlled substances exported by the importer and or by other U.S. companies, to a Party to the Protocol that will be used solely for quarantine and preshipment applications and therefore were not imported expending consumption allowances; and

(xvii) For quarantine and preshipment applications of class I, Group VI controlled substances in the United States or by a person of another Party, one copy of a certification that the material will be used only for quarantine and preshipment applications in accordance with the definitions in this subpart from each recipient of the material and a list of additional quantities shipped to that same person for the quarter.

(xviii) For critical uses of class I, Group VI controlled substances, importers shall report annually the amount of critical use methyl bromide owned by the reporting entity, specifying quantities dedicated for pre-plant use and quantities dedicated for post-harvest use, as well as quantities held by the reporting entity on behalf of another entity, specifying quantities dedicated for pre-plant use and quantities dedicated for post-harvest use along with the name of the entity on whose behalf the material is held.

(xix) Importers shall report annually the amount of methyl bromide produced or imported prior to the January 1, 2005, phaseout date owned by the reporting entity, as well as quantities held by the reporting entity on behalf of another entity, specifying the name of the entity on whose behalf the material is held.

(h) *Reporting Requirements—Exporters.* (1) For any exports of class I controlled substances (except Group VI) not reported under § 82.10 of this subpart (additional consumption allowances), or under paragraph (f)(3) of this section (reporting for producers of controlled substances), the exporter who exported a class I controlled substance (except Group VI) must submit to the Administrator the following information within 45 days after the end of the control period in which the unreported exports left the United States:

(i) The names and addresses of the exporter and the recipient of the exports;

(ii) The exporter's Employee Identification Number;

(iii) The type and quantity of each controlled substance exported and what percentage, if any, of the controlled substance is used, recycled or reclaimed;

(iv) The date on which, and the port from which, the controlled substances were exported from the United States or its territories;

(v) The country to which the controlled substances were exported;

(vi) The amount exported to each Article 5 country;

(vii) The commodity code of the controlled substance shipped; and

(viii) The invoice or sales agreement containing language similar to the Internal Revenue Service Certificate that the purchaser or recipient of imported

controlled substances intends to transform those substances, or destruction verifications (as in paragraph (k) of this section) showing that the purchaser or recipient intends to destroy the controlled substances.

(2) For any exports of class I, Group VI controlled substances not reported under § 82.10 of this subpart (additional consumption allowances), or under paragraph (f)(3) of this section (reporting for producers of controlled substances), the exporter who exported a class I, Group VI controlled substance must submit to the Administrator the following information within 45 days after the end of each quarter in which the unreported exports left the United States:

(i) The names and addresses of the exporter and the recipient of the exports;

(ii) The exporter's Employee Identification Number;

(iii) The type and quantity of each controlled substance exported and what percentage, if any, of the controlled substance is used, recycled or reclaimed;

(iv) The date on which, and the port from which, the controlled substances were exported from the United States or its territories;

(v) The country to which the controlled substances were exported;

(vi) The amount exported to each Article 5 country;

(vii) The commodity code of the controlled substance shipped; and

(viii) The invoice or sales agreement containing language similar to the Internal Revenue Service Certificate that the purchaser or recipient of imported controlled substances intends to transform those substances, the destruction verifications (as in paragraph (k) of this section) showing that the purchaser or recipient intends to destroy the controlled substances, or the certification that the purchaser or recipient and the eventual applicator will only use the material for quarantine and preshipment applications in accordance with the definitions in this subpart.

(i) Every person who has requested additional production allowances under § 82.9(e) of this subpart or destruction and transformation credits under § 82.9(f) of this subpart or consumption allowances under § 82.10(b) of this subpart or who transforms or destroys class I controlled substances not produced or imported by that person must maintain the following:

(1) Dated records of the quantity and level of each controlled substance transformed or destroyed;

(2) Copies of the invoices or receipts documenting the sale or transfer of the controlled substance to the person;

(3) In the case where those controlled substances are transformed, dated records of the names, commercial use, and quantities of the resulting chemical(s);

(4) In the case where those controlled substances are transformed, dated records of shipments to purchasers of the resulting chemical(s);

(5) Dated records of all shipments of controlled substances received by the person, and the identity of the producer or importer of the controlled substances;

(6) Dated records of inventories of controlled substances at each plant on the first day of each quarter; and

(7) A copy of the person's IRS certification of intent to transform or the purchaser's or recipient's destruction verification of intent to destroy (as under § 82.13(k)), in the case where substances were purchased or transferred for transformation or destruction purposes.

(j) Persons who destroy class I controlled substances shall, following promulgation of this rule, provide EPA with a one-time report stating the destruction unit's destruction efficiency and the methods used to record the volume destroyed and those used to determine destruction efficiency and the name of other relevant federal or state regulations that may apply to the destruction process. Any changes to the unit's destruction efficiency or methods used to record volume destroyed and to determine destruction efficiency must be reflected in a revision to this report to be submitted to EPA within 60 days of the change.

(k) Persons who purchase or receive and subsequently destroy controlled class I substances that were originally produced without expending allowances shall provide the producer or importer

from whom they purchased or received the controlled substances with a verification that controlled substances will be used in processes that result in their destruction.

(1) The destruction verification shall include the following:

(i) Identity and address of the person intending to destroy controlled substances;

(ii) Indication of whether those controlled substances will be completely destroyed, as defined in § 82.3 of this rule, or less than completely destroyed, in which case the destruction efficiency at which such substances will be destroyed must be included;

(iii) Period of time over which the person intends to destroy controlled substances; and

(iv) Signature of the verifying person.

(2) If, at any time, any aspects of this verification change, the person must submit a revised verification reflecting such changes to the producer from whom that person purchases controlled substances intended for destruction.

(l) Persons who purchase class I controlled substances and who subsequently transform such controlled substances shall provide the producer or importer with the IRS certification that the controlled substances are to be used in processes resulting in their transformation.

(m) Any person who transforms or destroys class I controlled substances who has submitted an IRS certificate of intent to transform or a destruction verification (as under paragraph (k) of this sectioin) to the producer or importer of the controlled substance, must report the names and quantities of class I controlled substances transformed and destroyed for each control period within 45 days of the end of such control period.

(n) Persons who import or export used controlled substances (including recycled or reclaimed) must label their bill of lading or invoice indicating that the controlled substance is used, recycled or reclaimed.

(o) Persons who import heels of controlled substances must label their bill of lading or invoice indicating that the controlled substance in the container is a heel.

(p) Every person who brings back a container with a heel to the United States, as defined in § 82.3, must report quarterly the amount brought into the United States certifying that the residual amount in each shipment is less than 10 percent of the volume of the container and will either:

(1) Remain in the container and be included in a future shipment;

(2) Be recovered and transformed;

(3) Be recovered and destroyed; or

(4) Be recovered for a non-emissive use.

(q) Every person who brings a container with a heel into the United States must report on the final disposition of each shipment within 45 days of the end of the control period.

(r) Every person who transships a controlled substance must maintain records that indicate that the controlled substance shipment originated in a foreign country destined for another foreign country, and does not enter interstate commerce with the United States.

(s) Any person allocated essential-use allowances who submits an order to a producer or importer for a controlled substance must report the quarterly quantity received from each producer or importer.

(t) Any distributor of laboratory supplies receiving controlled substances under the global laboratory essential-use exemption for sale to laboratory customers must report quarterly the quantity received of each controlled substance from each producer or importer.

(u) Holders of Essential-Use Allowances—Reporting.

(1) Within 30 days of the end of every quarter, any person allocated essential-use allowances must submit to the Administrator a report containing the quantity of each controlled substance, in kilograms, purchased and received from each producer and each importer during that quarter as well as from which country the controlled substance was imported.

(2) Any person allocated essential-use allowances must submit to the Administrator a report containing the following information within 30 days of the end of the control period, and, if

possible, within 20 days of the end of the control period:

(i) The gross quantity of each controlled substance, in kilograms, that was used for the essential use during the control period; and

(ii) The quantity of each controlled substance, in kilograms, contained in exported products during the control period; and

(iii) The quantity of each controlled substance, in kilograms, that was destroyed or recycled during the control period; and

(iv) The quantity of each controlled substance, in kilograms, held in inventory as of the last day of the control period, that was acquired with essential use allowances in all control periods (*i.e.* quantity on hand at the end of the year); and

(v) The quantity of each controlled substance, in kilograms, in a stockpile that is owned by the company or is being held on behalf of the company under contract, and was produced or imported through the use of production allowances and consumption allowances prior to the phaseout (*i.e.* class I ODSs produced before their phaseout dates); and

(vi) For essential use allowances for metered-dose inhalers only, the allowance holder must report the total number of marketable units of each specific metered-dose inhaler product manufactured in the control period.

(v) Any distributor of laboratory supplies who purchased controlled substances under the global essential laboratory and analytical use exemption must submit quarterly (except distributors following procedures in paragraph (x) of this section) the quantity of each controlled substance purchased by each laboratory customer whose certification was previously provided to the distributor pursuant to paragraph (w) of this section.

(w) A laboratory customer purchasing a controlled substance under the global essential laboratory and analytical use exemption must provide the producer, importer or distributor with a one-time-per-year certification for each controlled substance that the substance will only be used for essential laboratory and analytical uses (defined at appendix G of this subpart) and not be resold or used in manufacturing.

(1) The identity and address of the laboratory customer;

(2) The name and phone number of a contact person for the laboratory customer;

(3) The name and quantity of each controlled substance purchased, and the estimated percent of the controlled substance that will be used for each listed type of laboratory application.

(x) Any distributor of laboratory supplies who purchased class I controlled substances under the global essential laboratory and analytical use exemption, and who only sells the class I controlled substances as reference standards for calibrating laboratory analytical equipment, may write a letter to the Administrator requesting permission to submit the reports required under paragraph (v) of this section annually rather than quarterly. The Administrator will review the request and issue a notification of permission to file annual reports if, in the Administrator's judgment, the distributor meets the requirements of this paragraph. Upon receipt of a notification of extension from the Administrator, the distributor must submit annually the quantity of each controlled substance purchased by each laboratory customer whose certification was previously provided to the distributor pursuant to paragraph (w) of this section.

(y) Every distributor of methyl bromide (class I, Group VI controlled substances) who purchases or receives a quantity produced or imported solely for quarantine or preshipment applications under the exemptions in this subpart must comply with recordkeeping and reporting requirements specified in this paragraph (aa) of this section.

(1) Every distributor of methyl bromide must certify to the producer or importer that quantities received that were produced or imported solely for quarantine and preshipment applications under the exemptions in this subpart will be used only for quarantine applications or preshipment applications in accordance with the definitions in this subpart.

(2) Every distributor of a quantity of methyl bromide that was produced or imported solely for quarantine or

preshipment applications under the exemptions in this subpart must receive from an applicator a certification of the quantity of class I, Group VI controlled substances ordered, prior to delivery of the quantity, stating that the quantity will be used solely for quarantine or preshipment applications in accordance with definitions in this subpart.

(3) Every distributor of methyl bromide who receives a certification from an applicator that the quantity ordered and delivered will be used solely for quarantine and preshipment applications in accordance with definitions in this subpart must maintain the certifications as records for 3 years.

(4) Every distributor of methyl bromide who receives a certification from an applicator that the quantity ordered and delivered will be used solely for quarantine and preshipment applications in accordance with definitions in this subpart must report to the Administrator within 45 days after the end of each quarter, the total quantity delivered for which certifications were received that stated the class I, Group VI controlled substance would be used solely for quarantine and preshipment applications in accordance with definitions in this Subpart.

(z) Every applicator of class I, Group VI controlled substances who purchases or receives a quantity produced or imported solely for quarantine and preshipment applications under the exemptions in this subpart must comply with recordkeeping and reporting requirements specified in this paragraph (bb) of this section.

(1) Recordkeeping—Applicators. Every applicator of class I, Group VI controlled substances produced or imported solely for quarantine and preshipment applications under the exemptions of this subpart must maintain, for every application, a document from the commodity owner, shipper or their agent requesting the use of class I, Group VI controlled substances citing the regulatory requirement that justifies its use in accordance with definitions in this subpart. These documents shall be retained for 3 years.

(2) Reporting—Applicators. Every applicator of class I, Group VI controlled substances who purchases or receives a quantity of class I, Group VI controlled substance that was produced or imported solely for quarantine and preshipment applications under the exemptions in this subpart shall provide the distributor of the methyl bromide, prior to shipment of the class I, Group VI controlled substance, with a certification that the quantity of controlled substances will be used only for quarantine and preshipment applications as defined in this subpart.

(aa) Every commodity owner, shipper or their agent requesting an applicator to use a quantity of class I, Group VI controlled substance that was produced or imported solely for quarantine and preshipment applications under the exemptions of this subpart must maintain a record for 3 years, for each request, certifying knowledge of the requirements associated with the exemption for quarantine and preshipment applications in this subpart and citing the regulatory requirement that justifies the use of the class I, Group VI controlled substance in accordance with definitions in this subpart. The record must include the following statement: ''I certify knowledge of the requirements associated with the exempted quarantine and preshipment applications published in 40 CFR part 82, including the requirement that this letter cite the treatments or official controls for quarantine applications or the official requirements for preshipment requirements.''

(bb) Every distributor of methyl bromide (class I, Group VI controlled substances) who purchases or receives a quantity of critical use methyl bromide must comply with recordkeeping and reporting requirements specified in this paragraph (bb).

(1) Recordkeeping—Every distributor of critical use methyl bromide must certify to the producer or importer or other entity from which they are acquiring quantities of critical use methyl bromide that such quantities received will be sold or used only for approved critical use(s) in accordance with the definitions and prohibitions in this subpart.

(i) Every distributor of a quantity of critical use methyl bromide must receive from an applicator, or any other entity to whom they sell critical use

methyl bromide, a certification of the quantity of critical use methyl bromide ordered, prior to delivery of the quantity, stating that the quantity will be sold or used only for approved critical uses in accordance with definitions and prohibitions in this subpart.

(ii) Every distributor of methyl bromide who receives a certification from an applicator or any other entity to which they sell critical use methyl bromide must maintain the certifications as records for 3 years.

(iii) Every distributor of a quantity of critical use methyl bromide must maintain invoice and order records related to the sale of such material for 3 years.

(2) Reporting—Every distributor of critical use methyl bromide must report to the Administrator annually, the following items:

(i) For critical uses of class I, Group VI controlled substances, an annual list of the amount of critical use methyl bromide bought;

(ii) For critical uses of class I, Group VI controlled substances, an annual list of the amount of critical use methyl bromide sold for each specified critical use in Appendix L of this subpart;

(iii) For critical uses of class I, Group VI controlled substances, report the amount of critical use methyl bromide owned by the reporting entity, specifying quantities dedicated for pre-plant use and quantities dedicated for post-harvest use, as well as quantities held by the reporting entity on behalf of another entity, specifying quantities dedicated for pre-plant use and quantities dedicated for post-harvest use, along with the name of the entity on whose behalf the material is held;

(iv) The number of unexpended and expended critical stock allowances;

(v) The amount of methyl bromide produced or imported prior to the January 1, 2005, phaseout date owned by the reporting entity, as well as quantities held by the reporting entity on behalf of another entity, specifying the name of the entity on whose behalf the material is held.

(cc) Every third party applicator of methyl bromide (class I, Group VI controlled substances) that purchases or receives critical use methyl bromide must comply with recordkeeping and reporting requirements specified in this paragraph (cc).

(1) Recordkeeping—Every third party applicator of critical use methyl bromide must certify to the producer or importer or other entity from which they are acquiring quantities of critical use methyl bromide that such quantities received will be sold or used only for approved critical use(s) in accordance with the definitions and prohibitions in this subpart.

(i) Every third party applicator of a quantity of critical use methyl bromide must receive from any entity to whom they sell critical use methyl bromide, a certification of the quantity of critical use methyl bromide ordered, prior to delivery of the quantity, stating that the quantity will be sold or used only for approved critical uses in accordance with definitions and prohibitions in this subpart.

(ii) Every third party applicator of methyl bromide who receives a certification from an entity to which they sell critical use methyl bromide must maintain the certifications as records for 3 years.

(iii) Every third party applicator of a quantity of critical use methyl bromide must maintain invoice and order records related to the sale of such material for 3 years.

(2) Reporting—Every third party applicator of critical use methyl bromide must report to the Administrator annually, the following items:

(i) For critical uses of class I, Group VI controlled substances, an annual list of the amount of critical use methyl bromide bought;

(ii) For critical uses of class I, Group VI controlled substances, an annual list of the amount of critical use methyl bromide sold for each specified critical use in Appendix L of this subpart;

(iii) For critical uses of class I, Group VI controlled substances, report annually the amount of critical use methyl bromide owned by the reporting entity, specifying quantities dedicated for pre-plant use and quantities dedicated for post-harvest use, as well as quantities held by the reporting entity on behalf of another entity, specifying quantities dedicated for pre-plant use and quantities dedicated for post-harvest use,

along with the name of the entity on whose behalf the material is held;

(iv) The number of unexpended and expended critical stock allowances;

(v) The amount of methyl bromide produced or imported prior to the January 1, 2005 phaseout date owned by the reporting entity, as well as quantities held by the reporting entity on behalf of another entity, specifying the name of the entity on whose behalf the material is held.

(dd) Every approved critical user purchasing an amount of critical use methyl bromide or purchasing fumigation services with critical use methyl bromide must, for each request, identify the use as a critical use and certify being an approved critical user. The approved critical user certification will state, in part: ''I certify, under penalty of law, I am an approved critical user and I will use this quantity of methyl bromide for an approved critical use. My action conforms to the requirements associated with the critical use exemption published in 40 CFR part 82. I am aware that any agricultural commodity within a treatment chamber, facility or field I fumigate with critical use methyl bromide cannot subsequently or concurrently be fumigated with non-critical use methyl bromide during the same control period, excepting a QPS treatment or a treatment for a different use (*e.g.*, a different crop or commodity). I will not use this quantity of methyl bromide for a treatment chamber, facility, or field that I previously fumigated with non-critical use methyl bromide during the same control period, excepting a QPS treatment or a treatment for a different use (*e.g.*, a different crop or commodity), unless a local township limit now prevents me from using methyl bromide alternatives or I have now become an approved critical user as a result of rulemaking.'' The certification will also identify the type of critical use methyl bromide purchased, the location of the treatment, the crop or commodity treated, the quantity of critical use methyl bromide purchased, and the acreage/square footage treated, and will be signed and dated by the approved critical user.

[60 FR 24986, May 10, 1995]

EDITORIAL NOTE: For FEDERAL REGISTER citations affecting § 82.13 see the List of CFR Sections Affected, which appears in the Finding Aids section of the printed volume and at *www.fdsys.gov*.

§ 82.15 Prohibitions for class II controlled substances.

(a) *Production.* (1) Effective January 21, 2003, no person may produce class II controlled substances for which EPA has apportioned baseline production and consumption allowances, in excess of the quantity of unexpended production allowances, unexpended Article 5 allowances, unexpended export production allowances, or conferred unexpended HCFC–141b exemption allowances held by that person for that substance under the authority of this subpart at that time in that control period, unless the substances are transformed or destroyed domestically or by a person of another Party, or unless they are produced using an exemption granted in paragraph (f) of this section. Every kilogram of excess production constitutes a separate violation of this subpart.

(2) Effective January 21, 2003, no person may use production allowances to produce a quantity of class II controlled substance unless that person holds under the authority of this subpart at the same time consumption allowances sufficient to cover that quantity of class II controlled substances. No person may use consumption allowances to produce a quantity of class II controlled substances unless the person holds under authority of this subpart at the same time production allowances sufficient to cover that quantity of class II controlled substances.

(b) *Import.* (1) Effective January 21, 2003, no person may import class II controlled substances (other than transhipments, heels or used class II controlled substances) for which EPA has apportioned baseline production and consumption allowances , in excess of the quantity of unexpended consumption allowances, or conferred unexpended HCFC–141b exemption allowances held by that person under the authority of this subpart at that time in that control period, unless the substances are for use in a process resulting in their transformation or their destruction, or unless they are produced

using an exemption granted in paragraph (f) of this section. Every kilogram of excess import constitutes a separate violation of this subpart.

(2) Effective January 21, 2003, no person may import, at any time in any control period, a used class II controlled substance for which EPA has apportioned baseline production and consumption allowances, without having submitted a petition to the Administrator and received a non-objection notice in accordance with § 82.24(c)(3) and (4). A person issued a non-objection notice for the import of an individual shipment of used class II controlled substances may not transfer or confer the right to import, and may not import any more than the exact quantity (in kilograms) of the used class II controlled substance stated in the non-objection notice. Every kilogram of import of used class II controlled substance in excess of the quantity stated in the non-objection notice issued by the Administrator in accordance with § 82.24(c)(3) and (4) constitutes a separate violation of this subpart.

(c) *Production with Article 5 allowances.* No person may introduce into U.S. interstate commerce any class II controlled substance produced with Article 5 allowances, except for export to an Article 5 Party as listed in Annex 4 of appendix C of this subpart. Every kilogram of a class II controlled substance produced with Article 5 allowances that is introduced into interstate commerce other than for export to an Article 5 Party constitutes a separate violation under this subpart. No person may export any class II controlled substance produced with Article 5 allowances to a non-Article 5 Party. Every kilogram of a class II controlled substance that was produced with Article 5 allowances that is exported to a non-Article 5 Party constitutes a separate violation under this subpart.

(d) *Production with export production allowances.* No person may introduce into U.S. interstate commerce any class II controlled substance produced with export production allowances. Every kilogram of a class II controlled substance that was produced with export production allowances that is introduced into U.S. interstate commerce constitutes a separate violation under this subpart.

(e) *Trade with Parties.* No person may import or export any quantity of a class II controlled substance listed in appendix A to this subpart, from or to any foreign state that is not either:

(1) A Party to the Montreal Protocol that has ratified the Beijing Amendments. Parties that have ratified the Beijing Amendments as of June 17, 2004 are listed in annex 1 to appendix C of this subpart. Or,

(2) A Party to the Montreal Protocol that has provided notice, certification, and data in accordance with Decision XV/3(c)(i), (ii), and (iii) respectively, to the Ozone Secretariat. A list of Parties that have provided notice, certification and data in accordance with Decision XV/3(c)(i), (ii), and (iii) respectively, by June 17, 2004 can be found in annex 3 to Appendix C of this subpart and on a list maintained by the Ozone Secretariat. Or,

(3) A Party to the Montreal Protocol operating under Article 5(1) to the Montreal Protocol. A list of Parties operating under Article 5(1) to the Montreal Protocol as of June 17, 2004 can be found in annex 4 to appendix C of this subpart.

(f) *Exemptions.* (1) Medical Devices [Reserved]

(g) *Introduction into interstate commerce or use.* (1) Effective January 1, 2010, no person may introduce into interstate commerce or use HCFC–141b (unless used, recovered, and recycled) for any purpose except for use in a process resulting in its transformation or its destruction; for export to Article 5 Parties under § 82.18(a); for HCFC–141b exemption needs; as a transhipment or heel; or for exemptions permitted in paragraph (f) of this section.

(2)(i) Effective January 1, 2010, no person may introduce into interstate commerce or use HCFC–22 or HCFC–142b (unless used, recovered, and recycled) for any purpose other than for use in a process resulting in its transformation or its destruction; for use as a refrigerant in equipment manufactured before January 1, 2010; for export to Article 5 Parties under § 82.18(a); as a transhipment or heel; or for exemptions permitted in paragraph (f) of this section.

(ii) Introduction into interstate commerce and use of HCFC–22 is not subject to the prohibitions in paragraph (g)(2)(i) of this section if the HCFC–22 is for use in medical equipment prior to January 1, 2015; for use in thermostatic expansion valves prior to January 1, 2015; or for use as a refrigerant in appliances manufactured before January 1, 2012, provided that the components are manufactured prior to January 1, 2010, and are specified in a building permit or a contract dated before January 1, 2010, for use on a particular project.

(3) Effective January 1, 2015, no person may introduce into interstate commerce or use HCFC–141b (unless used, recovered, and recycled) for any purpose other than for use in a process resulting in its transformation or its destruction; for export to Article 5 Parties under § 82.18(a), as a transhipment or heel; or for exemptions permitted in paragraph (f) of this section.

(4) Effective January 1, 2015, no person may introduce into interstate commerce or use any class II controlled substance not governed by paragraphs (g)(1) through (3) of this section (unless used, recovered, and recycled) for any purpose other than for use in a process resulting in its transformation or its destruction; for use as a refrigerant in equipment manufactured before January 1, 2020; for export to Article 5 Parties under § 82.18(a); as a transhipment or heel; or for exemptions permitted in paragraph (f) of this section.

(5) Effective January 1, 2030, no person may introduce into interstate commerce or use any class II controlled substance (unless used, recovered, and recycled) for any purpose other than for use in a process resulting in its transformation or its destruction; for export to Article 5 Parties under § 82.18(a); as a transhipment or heel; or for exemptions permitted in paragraph (f) of this section.

(6) Effective January 1, 2040, no person may introduce into interstate commerce or use any class II controlled substance (unless used, recovered, and recycled) for any purpose other than for use in a process resulting in its transformation or its destruction, as a transhipment or heel, or for exemptions permitted in paragraph (f) of this section.

[68 FR 2848, Jan. 21, 2003, as amended at 69 FR 34031, June 17, 2004; 71 FR 41171, July 20, 2006; 74 FR 66445, Dec. 15, 2009]

§ 82.16 Phaseout schedule of class II controlled substances.

(a) In each control period as indicated in the following table, each person is granted the specified percentage of baseline production allowances and baseline consumption allowances for the specified class II controlled substances apportioned under §§ 82.17 and 82.19:

Control period	Percent of HCFC–141b	Percent of HCFC–22	Percent of HCFC–142b	Percent of HCFC–123	Percent of HCFC–124	Percent of HCFC–225ca	Percent of HCFC–225cb
2003	0	100	100	.....	.....	.....	.....
2004	0	100	100	.....	.....	.....	.....
2005	0	100	100	.....	.....	.....	.....
2006	0	100	100	.....	.....	.....	.....
2007	0	100	100	.....	.....	.....	.....
2008	0	100	100	.....	.....	.....	.....
2009	0	100	100	.....	.....	.....	.....
2010	0	41.9	0.47	125	125	125	125
2011	0	32.0	4.9	125	125	125	125
2012	0	.....	.....	125	125	125	125
2013	0	.....	.....	125	125	125	125
2014	0	.....	.....	125	125	125	125

(b) Effective January 1, 2003, no person may produce HCFC-141b except for use in a process resulting in its transformation or its destruction, for export under § 82.18(a) using unexpended Article 5 allowances, for export under § 82.18(b) using unexpended export production allowances, for HCFC-141b exemption needs using unexpended HCFC-141b exemption allowances, or for exemptions permitted in § 82.15(f). Effective January 1, 2003, no person

may import HCFC-141b (other than transhipments, heels or used class II controlled substances) in excess of the quantity of unexpended HCFC-141b exemption allowances held by that person except for use in a process resulting in its transformation or its destruction, or for exemptions permitted in § 82.15(f).

(c) Effective January 1, 2010, no person may produce HCFC-22 or HCFC-142b for any purpose other than for use in a process resulting in their transformation or their destruction, for use in equipment manufactured before January 1, 2010, for export under § 82.18(a) using unexpended Article 5 allowances, or for export under § 82.18(b) using unexpended export production allowances, or for exemptions permitted in § 82.15(f). Effective January 1, 2010, no person may import HCFC-22 or HCFC-142b (other than transhipments, heels or used class II controlled substances) for any purpose other than for use in a process resulting in their transformation or their destruction, for exemptions permitted in § 82.15(f), or for use in equipment manufactured prior to January 1, 2010.

(d) Effective January 1, 2015, no person may produce class II controlled substances not previously controlled, for any purpose other than for use in a process resulting in their transformation or their destruction, for use as a refrigerant in equipment manufactured before January 1, 2020, for export under § 82.18(a) using unexpended Article 5 allowances, or for export under § 82.18(b) using unexpended export production allowances, or for exemptions permitted in § 82.15(f). Effective January 1, 2015, no person may import class II controlled substances not subject to the requirements of paragraph (b) or (c) of this section (other than transhipments, heels or used class II controlled substances) for any purpose other than for use in a process resulting in their transformation or their destruction, for exemptions permitted in § 82.15(f), or for use as a refrigerant in equipment manufactured prior to January 1, 2020.

(e) Effective January 1, 2020, no person may produce HCFC-22 or HCFC-142b for any purpose other than for use in a process resulting in their transformation or their destruction, for export under § 82.18(a) using unexpended Article 5 allowances, or for export under § 82.18(b) using unexpended export production allowances, or for exemptions permitted in § 82.15(f). Effective January 1, 2020, no person may import HCFC-22 or HCFC-142b for any purpose other than for use in a process resulting in their transformation or their destruction, or for exemptions permitted in § 82.15(f).

(f) Effective January 1, 2030, no person may produce class II controlled substances, for any purpose other than for use in a process resulting in their transformation or their destruction, for export under § 82.18(a) using unexpended Article 5 allowances, or for exemptions permitted in § 82.15(f). Effective January 1, 2030, no person may import class II controlled substances for any purpose other than for use in a process resulting in their transformation or their destruction, or for exemptions permitted in § 82.15(f).

(g) Effective January 1, 2040, no person may produce class II controlled substances for any purpose other than for use in a process resulting in their transformation or their destruction, or for exemptions permitted in § 82.15(f).

(h) Petition for HCFC-141b exemption allowances.

(1) Effective January 21, 2003, a formulator of HCFC–141b, an agency, department, or instrumentality of the U.S., or a non-governmental space vehicle entity, may petition EPA for HCFC–141b exemption allowances for the production or import of HCFC–141b after the phaseout date, in accordance with this section. Except as provided in paragraphs (h)(4) and (7) of this section, a petitioner must submit the following information to the Director of EPA's Office of Atmospheric Programs no later than April 21, 2003, for the 2003 control period; and, for any subsequent control period, no later than October 31st of the year preceding the control period for which the HCFC–141b exemption allowances are requested:

(i) Name and address of the HCFC-141b formulator, U.S. government entity or non-governmental space vehicle entity;

(ii) Name of contact person, phone number, fax number and e-mail address;

(iii) Quantity (in kilograms) of HCFC-141b needed for each relevant calendar year, supported by documentation about past use for at least the previous three years;

(iv) Quantities of HCFC-141b, if any, contained in systems that were sold to other systems houses for at least the previous three years;

(v) Description of the markets and applications served by the use of HCFC-141b or systems based on HCFC-141b;

(vi) Technical description of processes in which HCFC-141b is being used;

(vii) Technical description of the specific conditions under which the product will be applied;

(viii) Technical description of why alternatives and substitutes are not sufficient to eliminate the use of HCFC-141b;

(ix) Amount of stockpiled HCFC-141b (on-hand, taken title to, or available from a supplier) along with a detailed analysis showing why stockpiled, recovered or recycled quantities are deemed to be unavailable, or technically or commercially infeasible for use (for example, taking into consideration undue costs for storage and transportation);

(x) An estimate of the number of control periods over which such an exemption would be necessary;

(xi) A detailed description of continuing investigations into and progress on possible alternatives and substitutes;

(xii) A list of alternatives considered, purchased or sampled, including dates and copies of receipts for verification;

(xiii) A summary of the petitioner's in-house development program including summaries of all relevant test results and their significance to subsequent decision-making and technology selection. Full supporting test data must be available on request including alternative tested and date on which it was tested;

(xiv) A clear statement of the preferred technical option(s) being pursued at the time of the petition and the reasoning for this selection;

(xv) A summary of product test results conducted on the preferred technical option(s) by accredited organizations in order to determine whether products meet applicable codes. Relevant test reports and certifications must be made available on request; and

(xvi) A description of the further development testing to be carried out over the number of control periods identified under paragraph (h)(1)(x) of this section.

(2) Within 21 business days of receipt of the petition, the Director of EPA's Office of Atmospheric Programs will issue to a HCFC-141b formulator, agency, department, or instrumentality of the U.S., or non-governmental space vehicle entity that has petitioned for HCFC-141b exemption allowances, based on information received in accordance with paragraph (h)(1) of this section, a notice indicating one of the following:

(i) A determination by the Director of EPA's Office of Atmospheric Programs to grant a specific quantity of HCFC-141b exemption allowances (in kilograms) for the production or import of HCFC-141b in a specified control period based on an assessment that HCFC-141b is necessary to maintain either safety, or operational or technical viability;

(ii) A determination by the Director of EPA's Office of Atmospheric Programs to request additional information because the information received in accordance with paragraph (h)(1) of this section is not sufficient to decide whether to grant or deny HCFC-141b exemption allowances. The Director of EPA's Office of Atmospheric Programs will decide whether to grant or deny HCFC-141b exemption allowances within 30 days of receipt of the additional information. However, if the petitioner fails to submit the additional information within 20 days of the request, such failure constitutes a basis for denying the petition for HCFC-141b exemption allowances.

(iii) A determination by the Director of EPA's Office of Atmospheric Programs to deny a grant of HCFC-141b exemption allowances due to one or more of the following reasons:

(A) The needs can be met by the use of a substance other than HCFC-141b;

(B) The needs can be met by the use of existing supplies of HCFC-141b;

(C) There is evidence of fraud or misrepresentation;

(D) Approval of the HCFC-141b exemption allowances would be inconsistent with U.S. obligations under the provisions of the Montreal Protocol (including Decisions agreed by the Parties);

(E) Approval of the HCFC-141b exemption allowances would be inconsistent with the Clean Air Act;

(F) There is an inadequate demonstration of efforts undertaken to research and implement alternatives; or

(G) Granting the HCFC-141b exemption allowances may reasonably be expected to endanger human health or the environment.

(3) Within ten working days after receipt of a notice outlining a determination by the Director of EPA's Office of Atmospheric Programs to deny a grant of HCFC-141b exemption allowances due to one or more of the reasons in paragraph (h)(2)(iii) of this section, the petitioner may file with the Director of EPA's Office of Atmospheric Programs a one-time appeal with elaborated information. The Director of EPA's Office of Atmospheric Programs may affirm the determination to deny a grant of HCFC-141b exemption allowances or make a determination to grant HCFC-141b exemption allowance, in light of the available evidence submitted with the appeal. If no appeal is submitted by the tenth day after receipt of the notice outlining a determination by the Director of EPA's Office of Atmospheric Programs to deny a grant of HCFC-141b exemption allowances, the denial will be final on that day.

(4) Any entity that has previously petitioned for HCFC-141b exemption allowances under paragraph (h)(1) of this section may file a petition for renewal for a subsequent control period by October 31st of the year preceding that control period. The petition for renewal must contain the following information:

(i) Name and address of the HCFC-141b formulator, U.S. government entity or non-governmental space vehicle entity;

(ii) Name of contact person, phone number, fax number and e-mail address;

(iii) Quantity (in kilograms) of HCFC-141b needed for the control period;

(iv) Description of markets and applications being served by the use of HCFC-141b;

(v) A technical description of the process in which HCFC-141b is still being used;

(vi) A technical description of the specific conditions under which the product is still being applied;

(vii) Technical description of why alternatives and substitutes are still not sufficient to eliminate the use of HCFC-141b;

(viii) Amount of stockpiled HCFC-141b (on-hand, taken title to, or available from a supplier) along with a detailed analysis showing why stockpiled, recovered or recycled quantities are deemed to be technically or economically infeasible for use; and

(ix) A detailed description of continuing investigations into and progress on possible alternatives and substitutes and how this activity differs from information given in the previous request.

(5) A person granted HCFC-141b exemption allowances by the Director of EPA's Office of Atmospheric Programs under paragraph (h)(2)(i) or (h)(3) of this section may request a quantity of HCFC-141b be produced or imported in the specified control period listed in the notice by conferring the rights to produce or import to a producer or importer.

(6) The HCFC-141b exemption allowances held by one entity do not automatically transfer to an acquiring entity. Any entity acquiring another company holding HCFC-141b exemption allowances must submit a renewal application in accordance with paragraph (h)(4) of this section at the time of the acquisition in order to qualify for the HCFC-141b exemption allowances.

(7) A formulator for, or an agency, department, or instrumentality of the U.S., or a non-governmental space vehicle entity that has previously petitioned for and been granted HCFC–141b exemption allowances under paragraphs (h)(1) through (4) of this section

is granted, on January 1 of each control period beginning January 1, 2007, HCFC–141b exemption allowances equivalent to 10% more than the highest amount previously granted under paragraphs (h)(1) through (4) of this section to that petitioner for space vehicle uses or defense applications.

(8) A formulator for, or an agency, department, or instrumentality of the U.S.; or a non-governmental space vehicle entity that has previously petitioned for and been granted HCFC–141b exemption allowances under paragraphs (h)(1) through (4) of this section but now seeks to obtain allowances in addition to those granted under paragraph (h)(7) of this section must submit a new petition in accordance with paragraph (h)(1) of this section.

[68 FR 2848, Jan. 21, 2003, as amended at 71 FR 41171, July 20, 2006; 74 FR 66446, Dec. 15, 2009; 76 FR 47467, Aug. 5, 2011]

§ 82.17 Apportionment of baseline production allowances for class II controlled substances.

The following persons are apportioned baseline production allowances for HCFC–22, HCFC–141b, HCFC–142b, HCFC–123, HCFC–124, HCFC–225ca, and HCFC–225cb, as set forth in the following table:

Person	Controlled substance	Allowances (kg)
AGC Chemicals Americas.	HCFC–225ca	266,608
	HCFC–225cb	373,952
Arkema	HCFC–22	46,692,336
	HCFC–141b	24,647,925
	HCFC–142b	484,369
DuPont	HCFC–22	42,638,049
	HCFC–124	2,269,210
Honeywell	HCFC–22	37,378,252
	HCFC–141b	28,705,200
	HCFC–142b	2,417,534
	HCFC–124	1,759,681
MDA Manufacturing	HCFC–22	2,383,835
Solvay Solexis	HCFC–142b	6,541,764

[76 FR 47467, Aug. 5, 2011]

§ 82.18 Availability of production in addition to baseline production allowances for class II controlled substances.

(a) *Article 5 allowances.* (1) Effective January 1, 2003, a person apportioned baseline production allowances for HCFC–141b, HCFC–22, or HCFC–142b under § 82.17 is also apportioned Article 5 allowances, equal to 15 percent of their baseline production allowances, for the specified HCFC for each control period up until December 31, 2009, to be used for the production of the specified HCFC for export only to foreign states listed in Annex 4 of appendix C to this subpart.

(2) Effective January 1, 2010, a person apportioned baseline production allowances under § 82.17 for HCFC–141b, HCFC–22, or HCFC–142b is also apportioned Article 5 allowances, equal to 10 percent of their baseline production allowances, for the specified HCFC for each control period up until December 31, 2019, to be used for the production of the specified HCFC for export only to foreign states listed in Annex 4 of appendix C to this subpart.

(3) Effective January 1, 2015, a person apportioned baseline production allowances under § 82.17 for HCFC–123, HCFC–124, HCFC–225ca, and HCFC–225cb is also apportioned Article 5 allowances, equal to 10 percent of their baseline production allowances, for the specified HCFC for each control period up until December 31, 2019, to be used for the production of the specified HCFC for export only to foreign states listed in Annex 4 of appendix C to this subpart.

(b) *Export Production Allowances.* (1) Effective January 1, 2003, a person apportioned baseline production allowances for HCFC–141b under § 82.17 is also apportioned export production allowances, equal to 100 percent of their baseline production allowances, for HCFC–141b for each control period up until December 31, 2009, to be used for the production of HCFC–141b for export only, in accordance with this section.

(2) [Reserved]

(c) *International trades of production allowances, export production allowances and Article 5 allowances.* (1) A person may increase or decrease its production allowances, export production allowances, or Article 5 allowances, for a specified control period through trades with another Party to the Protocol as set forth in this paragraph (c). Effective January 1, 2004, a nation listed either: in appendix L of this subpart that is also listed in Appendix C, Annex 1 of the Protocol as having ratified the Beijing Amendments, or in Appendix C,

Annex 1 of the Protocol as having ratified the Copenhagen Amendments but not listed in appendix L of this subpart, or in Appendix C, Annex 2 of the Protocol, as being a foreign state complying with the Beijing Amendments if the foreign state is listed in appendix L of this subpart, or as being a foreign state complying with the Copenhagen Amendments if the foreign state is not listed in appendix L of this subpart must agree either to trade to the person for the current control period some quantity of production that the nation is permitted under the Montreal Protocol or to receive from the person for the current control period some quantity of production that the person is permitted under this subpart. The person must expend its consumption allowances allocated under § 82.19, or obtained under § 82.20 in order to produce with the additional production allowances.

(2) *Trade from a Party—Information requirements.* (i) A person requesting a trade from a Party must submit to the Administrator a signed document from the principal diplomatic representative in that nation's embassy in the U.S. stating that the appropriate authority within that nation will establish or revise production limits for the nation to equal the lowest of the following three production quantities:

(A) The maximum production that the nation is allowed under the Protocol minus the quantity (in kilograms) to be traded;

(B) The maximum production that is allowed under the nation's applicable domestic law minus the quantity (in kilograms) to be traded; or

(C) The average of the nation's actual national production level for the three years prior to the trade minus the production to be traded.

(ii) A person requesting a trade from a Party must also submit to the Administrator a true copy of the document that sets forth the following:

(A) The identity and address of the person;

(B) The identity of the Party;

(C) The names and telephone numbers of contact persons for the person and for the Party;

(D) The chemical type and quantity (in kilograms) of production being traded;

(E) Documentation that the Party possesses the necessary quantity of unexpended production rights;

(F) The control period(s) to which the trade applies; and

(G) For increased production intended for export to the Party from whom the allowances would be received, a signed statement of intent to export to the Party.

(3) *Trade to a Party—Information requirements.* A person requesting a trade to a Party must submit a request that sets forth the following information to the Administrator:

(i) The identity and address of the person;

(ii) The identity of the Party;

(iii) The names and telephone numbers of contact persons for the person and for the Party;

(iv) The chemical type and quantity (in kilograms) of allowable production being traded; and

(v) The control period(s) to which the trade applies.

(4) *Review of international trade request to a Party.* After receiving a trade request that meets the requirements of paragraph (c)(3) of this section, the Administrator may, at his/her discretion, consider the following factors by seeking concurrence from the Department of Commerce, the United States Trade Representative, and the Department of State, where appropriate, in deciding whether to approve such a trade:

(i) Possible creation of domestic economic hardship;

(ii) Possible effects on trade;

(iii) Potential environmental implications; and

(iv) The total quantity of unexpended production allowances held by U.S. entities.

(5) *Notice of trade.* If the request meets the requirement of paragraph (c)(2) of this section for trades from Parties and paragraphs (c)(3) and (4) of this section for trades to Parties, the Administrator will issue the person a notice. The notice will either grant or deduct production allowances or export production allowances or Article 5 allowances and specify the control period

to which the trade applies. The Administrator may disapprove the trade request contingent on the consideration of factors listed in paragraph (c)(4) of this section for trades to Parties.

(i) For trades from a Party, the Administrator will issue a notice revising the allowances held by the recipient of the trade to equal the unexpended production allowances, unexpended export production allowances, or unexpended Article 5 allowances held by the recipient of the trade under this subpart plus the quantity of allowable production traded from the Party.

(ii) For trades to a Party, the Administrator will issue a notice revising the production limit for the trader to equal the lesser of:

(A) The unexpended production allowances, unexpended export production allowances or unexpended Article 5 allowances held by the trade or minus the quantity traded; or

(B) The unexpended production allowances held by the trader minus the amount by which the U.S. average annual production of the class II controlled substance being traded for the three years prior to the trade is less than the total allowable production of that class II controlled substance under this subpart minus the amount traded; or

(C) The total U.S. allowable production of the class II controlled substance being traded minus the three-year average of the actual annual U.S. production of the class II controlled substance prior to the control period of the trade.

(6) Revised notices of production limits for subsequent traders. If after one person obtains approval of a trade of allowable production of a class II controlled substance to a Party and other persons obtain approval for trades of the same class II controlled substance during the same control period, the Administrator will issue revised notices. The notices will revise the production limits for each of the other persons trading to equal the lesser of:

(i) The unexpended production allowances, unexpended export production allowances or unexpended Article 5 allowances held by the trader under this subpart minus the quantity traded; or

(ii) The result of the following set of calculations:

(A) The total U.S. allowable production of the class II controlled substance minus the three-year average of the actual annual U.S. production of the class II controlled substance prior to the control period of the trade;

(B) The quantity traded divided by the total quantity traded by all the other persons trading the same class II controlled substance in the same control period;

(C) The result of paragraph (c)(6)(ii)(A) of this section multiplied by the result of paragraph (c)(6)(ii)(B) of this section;

(D) The quantity derived in paragraph (c)(6)(i) of this section, minus the result of paragraph (c)(6)(ii)(C) of this section;

(7) Production limit for previous traders. The Administrator will also issue a notice revising the production limit for each trader who previously obtained approval of a trade of the class II controlled substance to a Party in the same control period to equal the result of the following set of calculations:

(i) The total U.S. allowable production of the class II controlled substance minus the three-year average of the actual annual U.S. production of the class II controlled substance prior to the control period of the trade;

(ii) The quantity traded by the person divided by the quantity traded by all the persons who have traded that class II controlled substance in that control period;

(iii) The result of paragraph (c)(7)(i) of this section multiplied by the result of paragraph (c)(7)(ii) of this section.

(iv) The unexpended production allowances, unexpended export production allowances or unexpended Article 5 allowances held by the person plus the result of paragraph (c)(7)(iii) of this section;

(8) Effective date of revised production limits. The change in production allowances, export production allowances or Article 5 allowances will be effective on the date that the notice is issued.

[68 FR 2848, Jan. 21, 2003, as amended at 74 FR 66446, Dec. 15, 2009]

§ 82.19 Apportionment of baseline consumption allowances for class II controlled substances.

The following persons are apportioned baseline consumption allowances for HCFC–22, HCFC–141b, HCFC–142b, HCFC–123, HCFC–124, HCFC–225ca, and HCFC–225cb, as set forth in the following table:

Person	Controlled substance	Allowances (kg)
ABCO Refrigeration Supply	HCFC–22	279,366
AGC Chemicals Americas	HCFC–225ca	285,328
	HCFC–225cb	286,832
Altair Partners	HCFC–22	302,011
Arkema	HCFC–22	48,637,642
	HCFC–141b	25,405,570
	HCFC–142b	483,827
	HCFC–124	3,719
Carrier	HCFC–22	54,088
Continental Industrial Group	HCFC–141b	20,315
Coolgas, Inc	HCFC–141b	16,097,869
Coolgas Investment Property	HCFC–22	1,040,458
	HCFC–123	19,980
	HCFC–124	3,742
Discount Refrigerants	HCFC–141b	994
DuPont	HCFC–22	38,814,862
	HCFC–141b	9,049
	HCFC–142b	52,797
	HCFC–123	1,877,042
	HCFC–124	743,312
H.G. Refrigeration Supply	HCFC–22	40,068
Honeywell	HCFC–22	35,392,492
	HCFC–141b	20,749,489
	HCFC–142b	1,315,819
	HCFC–124	1,284,265
ICC Chemical Corp	HCFC–141b	81,225
ICOR	HCFC–124	81,220
Mexichem Fluor Inc	HCFC–22	2,546,305
Kivlan & Company	HCFC–22	2,081,018
MDA Manufacturing	HCFC–22	2,541,545
Mondy Global	HCFC–22	281,824
National Refrigerants	HCFC–22	5,528,316
	HCFC–123	72,600
	HCFC–124	50,380
Perfect Technology Center, LP	HCFC–123	9,100
Refricenter of Miami	HCFC–22	381,293
Refricentro	HCFC–22	45,979
R-Lines	HCFC–22	63,172
Saez Distributors	HCFC–22	37,936
Solvay Fluorides	HCFC–22	3,781,691
	HCFC–141b	3,940,115
Solvay Solexis	HCFC–142b	194,536
Tulstar Products	HCFC–141b	89,913
	HCFC–123	34,800
	HCFC–124	229,582
USA Refrigerants	HCFC–22	14,865

[76 FR 47468, Aug. 5, 2011]

§ 82.20 Availability of consumption allowances in addition to baseline consumption allowances for class II controlled substances.

(a) A person may obtain at any time during the control period, in accordance with the provisions of this section, consumption allowances equivalent to the quantity of class II controlled substances that the person exported from the U.S. and its territories to a foreign state, in accordance with this section, when that quantity of class II controlled substance was produced in the U.S. or imported into the U.S. with expended consumption allowances.

(1) The exporter must submit to the Administrator a request for consumption allowances setting forth the following:

(i) The identities and addresses of the exporter and the recipient of the exports;

(ii) The exporter's Employer Identification Number;

(iii) The names and telephone numbers of contact persons for the exporter and the recipient;

(iv) The quantity (in kilograms) and type of class II controlled substances reported;

(v) The source of the class II controlled substances and the date purchased;

(vi) The date on which, and the port from which, the class II controlled substances were exported from the U.S. or its territories;

(vii) The country to which the class II controlled substances were exported;

(viii) A copy of the bill of lading and the invoice indicating the net quantity (in kilograms) of class II controlled substances shipped and documenting the sale of the class II controlled substances to the purchaser;

(ix) The commodity codes of the class II controlled substances reported; and

(x) A written statement from the producer that the class II controlled substances were produced with expended allowances or a written statement from the importer that the class II controlled substances were imported with expended allowances.

(2) The Administrator will review the information and documentation submitted under paragraph (a)(1) of this section and will issue a notice.

(i) The Administrator will determine the quantity of class II controlled substances that the documentation verifies was exported and issue consumption allowances equivalent to the quantity of class II controlled substances that were exported.

(A) The grant of the consumption allowances will be effective on the date the notice is issued.

(B) The consumption allowances will be granted to the person the exporter indicates, whether it is the producer, the importer, or the exporter.

(ii) The Administrator will issue a notice that the consumption allowances are not granted if the Administrator determines that the information and documentation do not satisfactorily substantiate the exporter's claims.

(b) *International trades of consumption allowances.* (1) A person may increase its consumption allowances for a specified control period through trades with another Party to the Protocol as set forth in this paragraph (b). A person may only receive consumption from Poland or Norway, or both, and only if the nation agrees to trade to the person for the current control period some quantity of consumption that the nation is permitted under the Montreal Protocol.

(2) Trade from a Party—Information requirements. A person must submit the following information to the Administrator:

(i) A signed document from the principal diplomatic representative in the Polish or Norwegian embassy in the U.S. stating that the appropriate authority within that nation will establish or revise consumption limits for the nation to equal the lowest of the following three consumption quantities:

(A) The maximum consumption that the nation is allowed under the Protocol minus the quantity (in kilograms) traded;

(B) The maximum consumption that is allowed under the nation's applicable domestic law minus the quantity (in kilograms) traded; or

(C) The average of the nation's actual consumption level for the three years prior to the trade minus the consumption traded.

(ii) A person requesting a consumption trade from Poland or Norway must also submit to the Administrator a true copy of the document that sets forth the following:

(A) The identity and address of the person;

(B) The identity of the Party;

(C) The names and telephone numbers of contact persons for the person and for the Party;

(D) The chemical type and quantity (in kilograms) of consumption being traded;

(E) Documentation that the Party possesses the necessary quantity of unexpended consumption rights;

(F) The control period(s) to which the trade applies; and

(3) *Notice of trade*. If the request meets the requirement of paragraph (b)(2) of this section for trades from Parties, the Administrator will issue the person a notice. The notice will grant consumption allowances and specify the control period to which the trade applies. The Administrator may disapprove the trade request if it does not meet the requirements of paragraph (b)(2) of this section.

(4) *Trade from a Party*. The Administrator will issue a notice revising the allowances held by the recipient of the trade to equal the unexpended consumption allowances held by the recipient of the trade under this subpart plus the quantity of allowable consumption traded from the Party.

(5) *Effective date of revised consumption limits*. The change in consumption allowances will be effective on the date that the notice is issued.

[68 FR 2848, Jan. 21, 2003, as amended at 71 FR 41172, July 20, 2006]

§§ 82.21–82.22 [Reserved]

§ 82.23 Transfers of allowances of class II controlled substances.

(a) *Inter-company transfers*. Effective January 1, 2003, a person (''transferor'') may transfer to any other person (''transferee'') any quantity of the transferor's class II consumption allowances, production allowances, export production allowances, or Article 5 allowances for the same type of allowance as follows:

(i) The transferor must submit to the Administrator a transfer claim setting forth the following:

(A) The identities and addresses of the transferor and the transferee;

(B) The name and telephone numbers of contact persons for the transferor and the transferee;

(C) The type of allowances being transferred, including the names of the class II controlled substances for which allowances are to be transferred;

(D) The quantity (in kilograms) of allowances being transferred;

(E) The control period(s) for which the allowances are being transferred;

(F) The quantity of unexpended allowances of the type and for the control period being transferred that the transferor holds under authority of this subpart on the date the claim is submitted to EPA; and

(G) For trades of consumption allowances, production allowances, export production allowances, or Article 5 allowances, the quantity of the 0.1 percent offset applied to the unweighted quantity traded that will be deducted from the transferor's allowance balance.

(ii) The Administrator will determine whether the records maintained by EPA indicate that the transferor possesses unexpended allowances sufficient to cover the transfer claim on the date the transfer claim is processed. The transfer claim is the quantity (in kilograms) to be transferred plus, in the case of transfers of production or consumption allowances, 0.1 percent of that quantity. The Administrator will take into account any previous transfers, any production, and allowable imports and exports of class II controlled substances reported by the transferor. Within three working days of receiving a complete transfer claim, the Administrator will take action to notify the transferor and transferee as follows:

(A) The Administrator will issue a notice indicating that EPA does not object to the transfer if EPA's records show that the transferor has sufficient unexpended allowances to cover the transfer claim. In the case of transfers of production or consumption allowances, EPA will reduce the transferor's balance of unexpended allowances by the quantity to be transferred plus 0.1 percent of that quantity. In the case of transfers of export production or Article 5 allowances, EPA will reduce the transferor's balance of unexpended allowances, respectively, by the quantity to be transferred. The transferor and the transferee may proceed with the transfer when EPA issues a no objection notice. However, if EPA ultimately finds that the transferor did not have sufficient unexpended allowances to cover the claim, the transferor and transferee, where applicable, will be held liable for any knowing violations of the regulations of this subpart that occur as a result of, or in conjunction with, the improper transfer.

(B) The Administrator will issue a notice disallowing the transfer if EPA's records show that the transferor has

insufficient unexpended allowances to cover the transfer claim, or that the transferor has failed to respond to one or more Agency requests to supply information needed to make a determination. Either party may file a notice of appeal, with supporting reasons, with the Administrator within 10 working days after receipt of notification. The Administrator may affirm or vacate the disallowance. If no appeal is taken by the tenth working day after notification, the disallowance shall be final on that day.

(iii) The transferor and transferee may proceed with the transfer if the Administrator does not respond to a transfer claim within the three working days specified in paragraph (a)(1)(ii) of this section. In the case of transfers of production or consumption allowances, EPA will reduce the transferor's balance of unexpended allowances by the quantity to be transferred plus 0.1 percent of that quantity. In the case of transfers of export production allowances or Article 5 allowances, EPA will reduce the transferor's balance of unexpended allowances by the quantity to be transferred plus 0.1 percent of that quantity. If EPA ultimately finds that the transferor did not have sufficient unexpended allowances to cover the claim, the transferor and/or the transferee, where applicable, will be held liable for any knowing violations of the regulations of this subpart that occur as a result of, or in conjunction with, the improper transfer.

(b) *Inter-pollutant transfers.* (1) Effective January 1, 2003, a person (transferor) may convert consumption allowances or production allowances for one class II controlled substance to the same type of allowance for another class II controlled substance listed in Appendix B of this subpart, following the procedures described in paragraph (b)(3) of this section.

(2) Inter-pollutant transfers will be permitted at any time during the control period and during the 30 days after the end of a control period.

(3) The transferor must submit to the Administrator a transfer claim that includes the following:

(i) The identity and address of the transferor;

(ii) The name and telephone number of a contact person for the transferor;

(iii) The type of allowances being converted, including the names of the class II controlled substances for which allowances are to be converted;

(iv) The quantity (in kilograms) and type of allowances to be converted;

(v) The quantity (in kilograms) of allowances to be subtracted from the transferor's unexpended allowances for the first class II controlled substance, to be equal to 100.1 percent of the quantity of allowances converted;

(vi) The quantity (in kilograms) of allowances to be added to the transferee's unexpended allowances for the second class II controlled substance, to be equal to the quantity (in kilograms) of allowances for the first class II controlled substance being converted multiplied by the quotient of the ozone depletion potential of the first class II controlled substance divided by the ozone depletion potential of the second class II controlled substance, as listed in Appendix B to this subpart;

(vii) The control period(s) for which the allowances are being converted; and

(viii) The quantity (in kilograms) of unexpended allowances of the type and for the control period being converted that the transferor holds under authority of this subpart as of the date the claim is submitted to EPA.

(4) The Administrator will determine whether the records maintained by EPA indicate that the convertor possesses unexpended allowances sufficient to cover the transfer claim on the date the transfer claim is processed (*i.e.*, the quantity (in kilograms) to be converted plus 0.1 percent of that quantity (in kilograms)). EPA will take into account any previous transfers, and any production, imports (not including transshipments or used class II controlled substances), or exports (not including transhipments or used class II controlled substances) of class II controlled substances reported by the convertor. Within three working days of receiving a complete transfer claim, the Administrator will take action to notify the convertor as follows:

(i) The Administrator will issue a notice indicating that EPA does not object to the transfer if EPA's records

show that the convertor has sufficient unexpended allowances to cover the transfer claim. EPA will reduce the transferor's balance of unexpended allowances by the quantity to be converted plus 0.1 percent of that quantity (in kilograms). When EPA issues a no objection notice, the transferor may proceed with the transfer. However, if EPA ultimately finds that the transferor did not have sufficient unexpended allowances to cover the claim, the transferor will be held liable for any violations of the regulations of this subpart that occur as a result of, or in conjunction with, the improper transfer.

(ii) The Administrator will issue a notice disallowing the transfer if EPA's records show that the transferor has insufficient unexpended allowances to cover the transfer claim, or that the transferor has failed to respond to one or more Agency requests to supply information needed to make a determination. The transferor may file a notice of appeal, with supporting reasons, with the Administrator within 10 working days after receipt of notification. The Administrator may affirm or vacate the disallowance. If no appeal is taken by the tenth working day after notification, the disallowance shall be final on that day.

(iii) The transferor may proceed with the transfer if the Administrator does not respond to a transfer claim within the three working days specified in paragraph (b)(4) of this section. EPA will reduce the transferor's balance of unexpended allowances by the quantity (in kilograms) to be converted plus 0.1 percent of that quantity (in kilograms). The transferor will be held liable for any violations of the regulations of this subpart that occur as a result of, or in conjunction with, the improper transfer if EPA ultimately finds that the transferor did not have sufficient unexpended allowances or credits to cover the claim.

(c) *Inter-company transfers and Inter-pollutant transfers*. If a person requests an inter-company transfer and an inter-pollutant transfer simultaneously, the quantity (in kilograms) subtracted from the transferor's unexpended production or consumption allowances for the first class II controlled substance will be equal to 100.1 percent of the quantity (in kilograms) of allowances that are being converted and transferred.

(d) A person receiving a permanent transfer of baseline production allowances or baseline consumption allowances (the transferee) for a specific class II controlled substance will be the person who has their baseline allowances adjusted in accordance with phaseout schedules in this section.

[68 FR 2848, Jan. 21, 2003]

§ 82.24 Recordkeeping and reporting requirements for class II controlled substances.

(a) *Recordkeeping and reporting*. Any person who produces, imports, exports, transforms, or destroys class II controlled substances must comply with the following recordkeeping and reporting requirements:

(1) Reports required by this section must be mailed to the Administrator within 30 days of the end of the applicable reporting period, unless otherwise specified.

(2) Revisions of reports that are required by this section must be mailed to the Administrator within 180 days of the end of the applicable reporting period, unless otherwise specified.

(3) Records and copies of reports required by this section must be retained for three years.

(4) Quantities of class II controlled substances must be stated in terms of kilograms in reports required by this section.

(5) Reports and records required by this section may be used for purposes of compliance determinations. These requirements are not intended as a limitation on the use of other evidence admissible under the Federal Rules of Evidence. Failure to provide the reports, petitions and records required by this section and to certify the accuracy of the information in the reports, petitions and records required by this section, will be considered a violation of this subpart. False statements made in reports, petitions and records will be considered violations of Section 113 of the Clean Air Act and under 18 U.S.C. 1001.

(b) *Producers.* Persons (''producers'') who produce class II controlled substances during a control period must comply with the following recordkeeping and reporting requirements:

(1) *Reporting—Producers.* For each quarter, each producer of a class II controlled substance must provide the Administrator with a report containing the following information:

(i) The quantity (in kilograms) of production of each class II controlled substance used in processes resulting in their transformation by the producer and the quantity (in kilograms) intended for transformation by a second party;

(ii) The quantity (in kilograms) of production of each class II controlled substance used in processes resulting in their destruction by the producer and the quantity (in kilograms) intended for destruction by a second party;

(iii) The expended allowances for each class II controlled substance;

(iv) The producer's total of expended and unexpended production allowances, consumption allowances, export production allowances, and Article 5 allowances at the end of that quarter;

(v) The quantity (in kilograms) of class II controlled substances sold or transferred during the quarter to a person other than the producer for use in processes resulting in their transformation or eventual destruction;

(vi) A list of the quantities and names of class II controlled substances, exported by the producer to a Party to the Protocol, that will be transformed or destroyed and therefore were not produced expending production or consumption allowances;

(vii) For transformation in the U.S. or by a person of another Party, one copy of a transformation verification from the transformer for a specific class II controlled substance and a list of additional quantities shipped to that same transformer for the quarter;

(viii) For destruction in the U.S. or by a person of another Party, one copy of a destruction verification as required in paragraph (e) of this section for a particular destroyer, destroying the same class II controlled substance, and a list of additional quantities shipped to that same destroyer for the quarter;

(ix) In cases where the producer produced class II controlled substances using export production allowances, a list of U.S. entities that purchased those class II controlled substances and exported them to a Party to the Protocol;

(x) In cases where the producer produced class II controlled substances using Article 5 allowances, a list of U.S. entities that purchased those class II controlled substances and exported them to Article 5 countries; and

(xi) A list of the HCFC 141b-exemption allowance holders from whom orders were received and the quantity (in kilograms) of HCFC-141b requested and produced.

(2) *Recordkeeping—Producers.* Every producer of a class II controlled substance during a control period must maintain the following records:

(i) Dated records of the quantity (in kilograms) of each class II controlled substance produced at each facility;

(ii) Dated records of the quantity (in kilograms) of class II controlled substances produced for use in processes that result in their transformation or for use in processes that result in their destruction;

(iii) Dated records of the quantity (in kilograms) of class II controlled substances sold for use in processes that result in their transformation or for use in processes that result in their destruction;

(iv) Dated records of the quantity (in kilograms) of class II controlled substances produced with export production allowances or Article 5 allowances;

(v) Copies of invoices or receipts documenting sale of class II controlled substances for use in processes that result in their transformation or for use in processes that result in their destruction;

(vi) Dated records of the quantity (in kilograms) of each class II controlled substance used at each facility as feedstocks or destroyed in the manufacture of a class II controlled substance or in the manufacture of any other substance, and any class II controlled substance introduced into the production

process of the same class II controlled substance at each facility;

(vii) Dated records of the quantity (in kilograms) of raw materials and feedstock chemicals used at each facility for the production of class II controlled substances;

(viii) Dated records of the shipments of each class II controlled substance produced at each plant;

(ix) The quantity (in kilograms) of class II controlled substances, the date received, and names and addresses of the source of used materials containing class II controlled substances which are recycled or reclaimed at each plant;

(x) Records of the date, the class II controlled substance, and the estimated quantity of any spill or release of a class II controlled substance that equals or exceeds 100 pounds;

(xi) Transformation verification in the case of transformation, or the destruction verification in the case of destruction as required in paragraph (e) of this section showing that the purchaser or recipient of a class II controlled substance, in the U.S. or in another country that is a Party, certifies the intent to either transform or destroy the class II controlled substance, or sell the class II controlled substance for transformation or destruction in cases when allowances were not expended;

(xii) Written verifications from a U.S. purchaser that the class II controlled substance was exported to a Party in accordance with the requirements in this section, in cases where export production allowances were expended to produce the class II controlled substance;

(xiii) Written verifications from a U.S. purchaser that the class II controlled substance was exported to an Article 5 country in cases where Article 5 allowances were expended to produce the class II controlled substance;

(xiv) Written verifications from a U.S. purchaser that HCFC-141b was manufactured for the express purpose of meeting HCFC-141b exemption needs in accordance with information submitted under § 82.16(h), in cases where HCFC-141b exemption allowances were expended to produce the HCFC-141b.

(3) For any person who fails to maintain the records required by this paragraph, or to submit the report required by this paragraph, the Administrator may assume that the person has produced at full capacity during the period for which records were not kept, for purposes of determining whether the person has violated the prohibitions at § 82.15.

(c) *Importers.* Persons (''importers'') who import class II controlled substances during a control period must comply with the following recordkeeping and reporting requirements:

(1) *Reporting—Importers.* For each quarter, an importer of a class II controlled substance (including importers of used class II controlled substances) must submit to the Administrator a report containing the following information:

(i) Summaries of the records required in paragraphs (c)(2)(i) through (xvi) of this section for the previous quarter;

(ii) The total quantity (in kilograms) imported of each class II controlled substance for that quarter;

(iii) The commodity code for the class II controlled substances imported, which must be one of those listed in appendix K to this subpart;

(iv) The quantity (in kilograms) of those class II controlled substances imported that are used class II controlled substances;

(v) The quantity (in kilograms) of class II controlled substances imported for that quarter and totaled by chemical for the control period to date;

(vi) For substances for which EPA has apportioned baseline production and consumption allowances, the importer's total sum of expended and unexpended consumption allowances by chemical as of the end of that quarter;

(vii) The quantity (in kilograms) of class II controlled substances imported for use in processes resulting in their transformation or destruction;

(viii) The quantity (in kilograms) of class II controlled substances sold or transferred during that quarter to each person for use in processes resulting in their transformation or eventual destruction; and

(ix) Transformation verifications showing that the purchaser or recipient of imported class II controlled substances intends to transform those substances or destruction verifications showing that the purchaser or recipient intends to destroy the class II controlled substances (as provided in paragraph (e) of this section).

(x) [Reserved]

(xi) A list of the HCFC 141b-exemption allowance holders from whom orders were received and the quantity (in kilograms) of HCFC-141b requested and imported.

(2) *Recordkeeping—Importers.* An importer of a class II controlled substance (including used class II controlled substances) must maintain the following records:

(i) The quantity (in kilograms) of each class II controlled substance imported, either alone or in mixtures, including the percentage of each mixture which consists of a class II controlled substance;

(ii) The quantity (in kilograms) of those class II controlled substances imported that are used and the information provided with the petition where a petition is required under paragraph (c)(3) of this section;

(iii) The quantity (in kilograms) of class II controlled substances other than transhipments or used substances imported for use in processes resulting in their transformation or destruction;

(iv) The quantity (in kilograms) of class II controlled substances other than transhipments or used substances imported and sold for use in processes that result in their destruction or transformation;

(v) The date on which the class II controlled substances were imported;

(vi) The port of entry through which the class II controlled substances passed;

(vii) The country from which the imported class II controlled substances were imported;

(viii) The commodity code for the class II controlled substances shipped, which must be one of those listed in appendix K to this subpart;

(ix) The importer number for the shipment;

(x) A copy of the bill of lading for the import;

(xi) The invoice for the import;

(xii) The quantity (in kilograms) of imports of used class II controlled substances;

(xiii) The U.S. Customs entry form;

(xiv) Dated records documenting the sale or transfer of class II controlled substances for use in processes resulting in their transformation or destruction;

(xv) Copies of transformation verifications or destruction verifications indicating that the class II controlled substances will be transformed or destroyed (as provided in paragraph (e) of this section).

(xvi) Written verifications from a U.S. purchaser that HCFC-141b was imported for the express purpose of meeting HCFC-141b exemption needs in accordance with information submitted under § 82.16(h), and that the quantity will not be resold, in cases where HCFC-141b exemption allowances were expended to import the HCFC-141b.

(3) *Petition to import used class II controlled substances and transhipment-Importers.* For each individual shipment over 5 pounds of a used class II controlled substance as defined in § 82.3 for which EPA has apportioned baseline production and consumption allowances, an importer must submit directly to the Administrator, at least 40 working days before the shipment is to leave the foreign port of export, the following information in a petition:

(i) The name and quantity (in kilograms) of the used class II controlled substance to be imported;

(ii) The name and address of the importer, the importer ID number, the contact person, and the phone and fax numbers;

(iii) Name, address, contact person, phone number and fax number of all previous source facilities from which the used class II controlled substance was recovered;

(iv) A detailed description of the previous use of the class II controlled substance at each source facility and a best estimate of when the specific controlled substance was put into the equipment at each source facility, and, when possible, documents indicating the date the material was put into the equipment;

(v) A list of the name, make and model number of the equipment from which the material was recovered at each source facility;

(vi) Name, address, contact person, phone number and fax number of the exporter and of all persons to whom the material was transferred or sold after it was recovered from the source facility;

(vii) The U.S. port of entry for the import, the expected date of shipment and the vessel transporting the chemical. If at the time of submitting a petition the importer does not know the U.S. port of entry, the expected date of shipment and the vessel transporting the chemical, and the importer receives a non-objection notice for the individual shipment in the petition, the importer is required to notify the Administrator of this information prior to the actual U.S. Customs entry of the individual shipment;

(viii) A description of the intended use of the used class II controlled substance, and, when possible, the name, address, contact person, phone number and fax number of the ultimate purchaser in the United States;

(ix) The name, address, contact person, phone number and fax number of the U.S. reclamation facility, where applicable;

(x) If someone at the source facility recovered the class II controlled substance from the equipment, the name and phone and fax numbers of that person;

(xi) If the imported class II controlled substance was reclaimed in a foreign Party, the name, address, contact person, phone number and fax number of any or all foreign reclamation facility(ies) responsible for reclaiming the cited shipment;

(xii) An export license from the appropriate government agency in the country of export and, if recovered in another country, the export license from the appropriate government agency in that country;

(xiii) If the imported used class II controlled substance is intended to be sold as a refrigerant in the U.S., the name and address of the U.S. reclaimer who will bring the material to the standard required under subpart F of this part, if not already reclaimed to those specifications; and

(xiv) A certification of accuracy of the information submitted in the petition.

(4) *Review of petition to import used class II controlled substances and transhipments—Importers.* Starting on the first working day following receipt by the Administrator of a petition to import a used class II controlled substance, the Administrator will initiate a review of the information submitted under paragraph (c)(3) of this section and take action within 40 working days to issue either an objection-notice or a non-objection notice for the individual shipment to the person who submitted the petition to import the used class II controlled substance.

(i) The Administrator may issue an objection notice to a petition for the following reasons:

(A) If the Administrator determines that the information is insufficient, that is, if the petition lacks or appears to lack any of the information required under paragraph (c)(3) of this section;

(B) If the Administrator determines that any portion of the petition contains false or misleading information, or the Administrator has information from other U.S. or foreign government agencies indicating that the petition contains false or misleading information;

(C) If the transaction appears to be contrary to provisions of the Vienna Convention on Substances that Deplete the Ozone Layer, the Montreal Protocol and Decisions by the Parties, or the non-compliance procedures outlined and instituted by the Implementation Committee of the Montreal Protocol;

(D) If the appropriate government agency in the exporting country has not agreed to issue an export license for the cited individual shipment of used class II controlled substance;

(E) If reclamation capacity is installed or is being installed for that specific class II controlled substance in the country of recovery or country of export and the capacity is funded in full or in part through the Multilateral Fund.

(ii) Within ten (10) working days after receipt of the objection notice,

the importer may re-petition the Administrator, only if the Administrator indicated ''insufficient information'' as the basis for the objection notice. If no appeal is taken by the tenth working day after the date on the objection notice, the objection shall become final. Only one re-petition will be accepted for any original petition received by EPA.

(iii) Any information contained in the re-petition which is inconsistent with the original petition must be identified and a description of the reason for the inconsistency must accompany the re-petition.

(iv) In cases where the Administrator does not object to the petition based on the criteria listed in paragraph (c)(4)(i) of this section, the Administrator will issue a non-objection notice.

(v) To pass the approved used class II controlled substances through U.S. Customs, the petition and the non-objection notice issued by EPA must accompany the shipment through U.S. Customs.

(vi) If for some reason, following EPA's issuance of a non-objection notice, new information is brought to EPA's attention which shows that the non-objection notice was issued based on false information, then EPA has the right to:

(A) Revoke the non-objection notice;

(B) Pursue all means to ensure that the class II controlled substance is not imported into the U.S.; and

(C) Take appropriate enforcement actions.

(vii) Once the Administrator issues a non-objection notice, the person receiving the non-objection notice is permitted to import the individual shipment of used class II controlled substance only within the same control period as the date stamped on the non-objection notice.

(viii) A person receiving a non-objection notice from the Administrator for a petition to import used class II controlled substances must maintain the following records:

(A) A copy of the petition;

(B) The EPA non-objection notice;

(C) The bill of lading for the import; and

(D) U.S. Customs entry documents for the import that must include one of the commodity codes from Appendix K to this subpart.

(5) Recordkeeping for transhipments—Importers. Any person who tranships a class II controlled substance must maintain records that indicate:

(i) That the class II controlled substance shipment originated in a foreign country;

(ii) That the class II controlled substance shipment is destined for another foreign country; and

(iii) That the class II controlled substance shipment will not enter interstate commerce within the U.S.

(d) *Exporters.* Persons (''exporters'') who export class II controlled substances during a control period must comply with the following reporting requirements:

(1) *Reporting—Exporters.* For any exports of class II controlled substances not reported under § 82.20 (additional consumption allowances), or under paragraph (b)(2) of this section (reporting for producers of class II controlled substances), each exporter who exported a class II controlled substance must submit to the Administrator the following information within 30 days after the end of each quarter in which the unreported exports left the U.S.:

(i) The names and addresses of the exporter and the recipient of the exports;

(ii) The exporter's Employer Identification Number;

(iii) The type and quantity (in kilograms) of each class II controlled substance exported and what percentage, if any of the class II controlled substance is used;

(iv) The date on which, and the port from which, the class II controlled substances were exported from the U.S. or its territories;

(v) The country to which the class II controlled substances were exported;

(vi) The quantity (in kilograms) exported to each Article 5 country;

(vii) The commodity code for the class II controlled substances shipped, which must be one of those listed in appendix K to this subpart;

(viii) For persons reporting transformation or destruction, the invoice or sales agreement containing language similar to the transformation

verifications that the purchaser or recipient of imported class II controlled substances intends to transform those substances, or destruction verifications showing that the purchaser or recipient intends to destroy the class II controlled substances (as provided in paragraph (e) of this section).

(2) *Reporting export production allowances—Exporters.* In addition to the information required in paragraph (d)(1) of this section, any exporter using export production allowances must also provide the following to the Administrator:

(i) The Employer Identification Number on the Shipper's Export Declaration Form or Employer Identification Number of the shipping agent shown on the U.S. Customs Form 7525;

(ii) The exporting vessel on which the class II controlled substances were shipped; and

(iii) The quantity (in kilograms) exported to each Party.

(3) *Reporting Article 5 allowances—Exporters.* In addition to the information required in paragraph (d)(1) of this section, any exporter using Article 5 allowances must also provide the following to the Administrator:

(i) The Employer Identification Number on the Shipper's Export Declaration Form or Employer Identification Number of the shipping agent shown on the U.S. Customs Form 7525; and

(ii) The exporting vessel on which the class II controlled substances were shipped.

(4) *Reporting used class II controlled substances—Exporters.* Any exporter of used class II controlled substances must indicate on the bill of lading or invoice that the class II controlled substance is used, as defined in § 82.3.

(e) *Transformation and destruction.* Any person who transforms or destroys class II controlled substances must comply with the following recordkeeping and reporting requirements:

(1) *Recordkeeping—Transformation and destruction.* Any person who transforms or destroys class II controlled substances produced or imported by another person must maintain the following:

(i) Copies of the invoices or receipts documenting the sale or transfer of the class II controlled substances to the person;

(ii) Records identifying the producer or importer of the class II controlled substances received by the person;

(iii) Dated records of inventories of class II controlled substances at each plant on the first day of each quarter;

(iv) Dated records of the quantity (in kilograms) of each class II controlled substance transformed or destroyed;

(v) In the case where class II controlled substances were purchased or transferred for transformation purposes, a copy of the person's transformation verification as provided under paragraph (e)(3)of this section.

(vi) Dated records of the names, commercial use, and quantities (in kilograms) of the resulting chemical(s) when the class II controlled substances are transformed; and

(vii) Dated records of shipments to purchasers of the resulting chemical(s) when the class II controlled substances are transformed.

(viii) In the case where class II controlled substances were purchased or transferred for destruction purposes, a copy of the person's destruction verification, as provided under paragraph (e)(5) of this section.

(2) *Reporting—Transformation and destruction.* Any person who transforms or destroys class II controlled substances and who has submitted a transformation verification ((paragraph (e)(3) of this section) or a destruction verification (paragraph (e)(5) of this section) to the producer or importer of the class II controlled substances, must report the following:

(i) The names and quantities (in kilograms) of the class II controlled substances transformed for each control period within 45 days of the end of such control period; and

(ii) The names and quantities (in kilograms) of the class II controlled substances destroyed for each control period within 45 days of the end of such control period.

(3) *Reporting—Transformation.* Any person who purchases class II controlled substances for purposes of transformation must provide the producer or importer with a transformation verification that the class II controlled substances are to be used in

processes that result in their transformation.

(i) The transformation verification shall include the following:

(A) Identity and address of the person intending to transform the class II controlled substances;

(B) The quantity (in kilograms) of class II controlled substances intended for transformation;

(C) Identity of shipments by purchase order number(s), purchaser account number(s), by location(s), or other means of identification;

(D) Period of time over which the person intends to transform the class II controlled substances; and

(E) Signature of the verifying person.

(ii) [Reserved]

(4) *Reporting—Destruction*. Any person who destroys class II controlled substances shall provide EPA with a one-time report containing the following information:

(i) The destruction unit's destruction efficiency;

(ii) The methods used to record the volume destroyed;

(iii) The methods used to determine destruction efficiency;

(iv) The name of other relevant federal or state regulations that may apply to the destruction process;

(v) Any changes to the information in paragraphs (e)(4)(i), (ii), and (iii) of this section must be reflected in a revision to be submitted to EPA within 60 days of the change(s).

(5) *Reporting—Destruction*. Any person who purchases or receives and subsequently destroys class II controlled substances that were originally produced without expending allowances shall provide the producer or importer from whom it purchased or received the class II controlled substances with a verification that the class II controlled substances will be used in processes that result in their destruction.

(i) The destruction verification shall include the following:

(A) Identity and address of the person intending to destroy class II controlled substances;

(B) Indication of whether those class II controlled substances will be completely destroyed, as defined in § 82.3, or less than completely destroyed, in which case the destruction efficiency at which such substances will be destroyed must be included;

(C) Period of time over which the person intends to destroy class II controlled substances; and

(D) Signature of the verifying person.

(ii) [Reserved]

(f) *Heels-Recordkeeping and reporting*. Any person who brings into the U.S. a rail car, tank truck, or ISO tank containing a heel, as defined in § 82.3, of class II controlled substances, must take the following actions:

(1) Indicate on the bill of lading or invoice that the class II controlled substance in the container is a heel.

(2) Report within 30 days of the end of the control period the quantity (in kilograms) brought into the U.S. and certify:

(i) That the residual quantity (in kilograms) in each shipment is no more than 10 percent of the volume of the container;

(ii) That the residual quantity (in kilograms) in each shipment will either:

(A) Remain in the container and be included in a future shipment;

(B) Be recovered and transformed;

(C) Be recovered and destroyed; or

(D) Be recovered for a non-emissive use.

(3) Report on the final disposition of each shipment within 30 days of the end of the control period.

(g) *HCFC 141b exemption allowances—Reporting and recordkeeping*. (1) Any person allocated HCFC-141b exemption allowances who confers a quantity of the HCFC-141b exemption allowances to a producer or import and places an order for the production or import of HCFC-141b with a verification that the HCFC-141b will only be used for the exempted purpose and not be resold must submit semi-annual reports, due 30 days after the end of the second and fourth respectively, to the Administrator containing the following information:

(i) Total quantity (in kilograms) HCFC-141b received during the 6 month period; and

(ii) The identity of the supplier of HCFC-141b on a shipment-by-shipment basis during the 6 month period.

(2) Any person allocated HCFC-141b exemption allowances must keep

records of letters to producers and importers conferring unexpended HCFC-141b exemption allowances for the specified control period in the notice, orders for the production or import of HCFC-141b under those letters and written verifications that the HCFC-141b was produced or imported for the express purpose of meeting HCFC-141b exemption needs in accordance with information submitted under §82.16(h), and that the quantity will not be resold.

[68 FR 2848, Jan. 21, 2003, as amended at 71 FR 41172, July 20, 2006]

APPENDIX A TO SUBPART A OF PART 82—CLASS I CONTROLLED SUBSTANCES

Class 1 controlled substances	ODP
A. Group I:	
$CFCl_3$-Trichlorofluoromethane (CFC-ll)	1.0
CF_2 Cl_2-Dichlorofifluoromethane (CFC-12)	1.0
C_2 F_3 Cl_3-Trichlorotrifluoroethane (CFC-113)	0.8
C_2 F_4 Cl_2-Dichlorotetrafluoroethane (CFC-114)	1.0
C_2 F_5 Cl-Monochloropentafluoroethane (CFC-115)	0.6
All isomers of the above chemicals	
B. Group II:	
CF_2 ClBr-Bromochlorodifluoromethane (Halon-1211)	3.0
CF_3 Br-Bromotrifluoromethane (Halon-1301)	10.0
C_2 F_4 Br_2-Dibromotetrafluoroethane (Halon-2402)	6.0
All isomers of the above chemicals	
C. Group III:	
CF_3 Cl-Chlorotrifluoromethane (CFC-13)	1.0
C_2 FCl_5-(CFC-111)	1.0
C_2 F_2 Cl_4-(CFC-112)	1.0
C_3 FCl_7-(CFC-211)	1.0
C_3 F_2 Cl_6-(CFC-212)	1.0
C_3 F_3 Cl_5-(CFC-213)	1.0
C_3 F_4 Cl_4-(CFC-214)	1.0
C_3 F_5 Cl_3-(CFC-215)	1.0
C_3 F_6 Cl_2-(CFC-216)	1.0
C_3 F_7 Cl-(CFC-217)	1.0
All isomers of the above chemicals	
D. Group IV: CCl_4-Carbon Tetrachloride	1.1
E. Group V:	
C_2 H_3 Cl_3-1,1,1 Trichloroethane (Methyl chloroform)	0.1
All isomers of the above chemical except 1,1,2-trichloroethane	
F. Group VI: CH_3 Br—Bromomethane (Methyl Bromide)	0.7
G. Group VII:	
$CHFBR_2$	1.00
CHF_2 Br (HBFC–2201)	0.74
CH_2 FBr	0.73
C_2 $HFBr_4$	0.3–0.8
C_2 HF_2 Br_3	0.5–1.8
C_2 HF_3 Br_2	0.4–1.6
C_2 HF_4 Br	0.7–1.2
C_2 H_2 FBr_3	0.1–1.1
C_2 H_2 F_2 Br_2	0.2–1.5
C_2 H_2 F_3 Br	0.7–1.6
C_2 H_2 FBr_2	0.1–1.7
C_2 H_3 F_2 Br	0.2–1.1
C_2 H_4 FBr	0.07–0.1
C_3 $HFBr_6$	0.3–1.5
C_3 HF_2 Br_5	0.2–1.9
C_3 HF_3 Br_4	0.3–1.8
C_3 HF_4 Br_3	0.5–2.2
C_3 HF_5 Br_2	0.9–2.0
C_3 HF_6 Br	0.7–3.3
C_3 H_2 FBR_5	0.1–1.9
C_3 H_2 F_2 BR_4	0.2–2.1
C_3 H_2 F_3 Br_3	0.2–5.6
C_3 H_2 F_4 Br_2	0.3–7.5
C_3 H_2 F_5 BR	0.9–14
C_3 H_3 FBR_4	0.08–1.9
C_3 H_3 F_2 Br_3	0.1–3.1
C_3 H_3 F_3 Br_2	0.1–2.5
C_3 H_3 F_4 Br	0.3–4.4
C_3 H_4 FBr_3	0.03–0.3
C_3 H_4 F_2 Br_2	0.1–1.0
C_3 H_4 F_3 Br	0.07–0.8
C_3 H_5 FBr_2	0.04–0.4
C_3 H_5 F_2 Br	0.07–0.8
C_3 H_6 FB	0.02–0.7
H. Group VIII:	
CH2BrCl (Chlorobromomethane	0.12.

[60 FR 24986, May 10, 1995, as amended at 68 FR 42892, July 18, 2003]

APPENDIX B TO SUBPART A OF PART 82—CLASS II CONTROLLED SUBSTANCES [A]

Controlled Substance	ODP
1. Dichlorofluoromethane (HCFC-21)	0.04
2. Monochlorodifluoromethane (HCFC-22).	0.055
3. Monochlorofluoromethane (HCFC-31)	0.02
4. Tetrachlorofluoroethane (HCFC-121)	0.01–0.04
5. Trichlorodifluoroethane (HCFC-122)	0.02–0.08
6. Dichlorotrifluoroethane (HCFC-123)	0.02
7. Monochlorotetrafluoroethane (HCFC-124).	0.022
8. Trichlorofluoroethane (HCFC-131)	0.007–0.05
9. Dichlorodifluoroethane (HCFC-132)	0.008–0.05
10. Monochlorotrifluoroethane (HCFC-133).	0.02–0.06
11. Dichlorofluoroethane (HCFC-141b)	0.11
12. Monochlorodifluoroethane (HCFC-142b).	0.065
13. Chlorofluoroethane (HCFC-151)	0.003–0.005
14. Hexachlorofluoropropane (HCFC-221).	0.015–0.07
15. Pentachlorodifluoropropane (HCFC-222).	0.01–0.09
16. Tetrachlorotrifluoropropane (HCFC-223).	0.01–0.08
17. Trichlorotetrafluoropropane (HCFC-224).	0.01–0.09
18. Dichloropentafluoropropane (HCFC-225ca).	0.025
19. Dichloropentafluoropropane (HCFC-225cb).	0.033
20. Monochlorohexafluoropropane (HCFC-226).	0.02–0.10
21. Pentachlorofluoropropane (HCFC-231).	0.05–0.09
22. Tetrachlorodifluoropropane (HCFC-232).	0.008–0.10
23. Trichlorotrifluoropropane (HCFC-233)	0.007–0.23
24. Dichlorotetrafluoropropane (HCFC-234).	0.01–0.28
25. Monochloropentafluoropropane (HCFC-235).	0.03–0.52

Controlled Substance	ODP
26. Tetrachlorofluoropropane (HCFC-241).	0.004–0.09
27. Trichlorodifluoropropane (HCFC-242)	0.005–0.13
28. Dichlorotrifluoropropane (HCFC-243)	0.007–0.12
29. Monochlorotetrafluoropropane (HCFC-244).	0.009–0.14
30. Trichlorofluoropropane (HCFC-251) ..	0.001–0.01
31. Dichlorodifluoropropane (HCFC-252)	0.005–0.04
32. Monochlorotrifluoropropane (HCFC-253).	0.003–0.03
33. Dichlorofluoropropane (HCFC-261) ..	0.002–0.02
34. Monochlorodifluoropropane (HCFC-262).	0.002–0.02
35. Monochlorofluoropropane (HCFC-271).	0.001–0.03

[a] According to Annex C of the Montreal Protocol, "Where a range of ODPs is indicated, the highest value in that range shall be used for the purposes of the Protocol. The ODPs listed as a single value have been determined from calculations based on laboratory measurements. Those listed as a range are based on estimates and are less certain. The range pertains to an isomeric group. The upper value is the estimate of the ODP of the isomer with the highest ODP, and the lower value is the estimate of the ODP of the isomer with the lowest ODP."

[68 FR 2859, Jan. 21, 2003]

Appendix C to Subpart A of Part 82—Parties to the Montreal Protocol, and Nations Complying With, But Not Parties to, the Protocol

Annex 1 to Appendix C of Subpart A—Parties to the Montreal Protocol (as of January 29, 2003)

The check mark [✓] means the particular country ratified the Protocol or the specific Amendment package. Amendment packages are identified by the name of the city where the amendment package was negotiated and agreed. Updated lists of Parties to the Protocol and the Amendments can be located at: *http://www.unep.org/ozone/ratif.shtml*.

Foreign state	Montreal protocol	London amendments	Copenhagen amendments	Montreal amendments	Beijing amendments
Albania	✓				
Algeria	✓	✓	✓		
Angola	✓				
Antigua and Barbuda	✓	✓	✓	✓	
Argentina	✓	✓	✓	✓	
Armenia	✓				
Australia	✓	✓	✓	✓	
Austria	✓	✓	✓	✓	
Azerbaijan	✓	✓	✓	✓	
Bahamas	✓	✓	✓		
Bahrain	✓	✓	✓	✓	
Bangladesh	✓	✓	✓	✓	
Barbados	✓	✓	✓	✓	✓
Belarus	✓	✓			
Belgium	✓	✓	✓		
Belize	✓	✓	✓		
Benin	✓	✓	✓		
Bolivia	✓	✓	✓	✓	
Bosnia and Herzegovina	✓				
Botswana	✓	✓	✓		
Brazil	✓	✓	✓		
Brunei Darussalam	✓				
Bulgaria	✓	✓	✓	✓	✓
Burkina Faso	✓	✓	✓	✓	✓
Burundi	✓	✓	✓	✓	✓
Cambodia	✓				
Cameroon	✓	✓	✓		
Canada	✓	✓	✓	✓	✓
Cape Verde	✓	✓	✓	✓	
Central African Republic	✓				
Chad	✓	✓	✓	✓	
Chile	✓	✓	✓	✓	✓
China	✓	✓			
Colombia	✓	✓	✓		
Comoros	✓	✓	✓	✓	✓
Congo	✓	✓	✓	✓	✓
Congo, Democratic Republic of	✓	✓	✓		
Costa Rica	✓	✓	✓		
Cote d'Ivoire	✓	✓			
Croatia	✓	✓	✓	✓	✓
Cuba	✓	✓	✓		
Cyprus	✓	✓			
Czech Republic	✓	✓	✓	✓	✓
Denmark	✓	✓	✓		
Djibouti	✓	✓	✓	✓	
Dominica	✓	✓			

Foreign state	Montreal protocol	London amendments	Copenhagen amendments	Montreal amendments	Beijing amendments
Dominican Republic	✓	✓	✓		
Ecuador	✓	✓	✓		
Egypt	✓	✓	✓	✓	
El Salvador	✓	✓	✓	✓	
Estonia	✓	✓	✓		
Ethiopia	✓				
European Community	✓	✓	✓	✓	✓
Federated States of Micronesia	✓	✓	✓	✓	✓
Fiji	✓	✓	✓		
Finland	✓	✓	✓	✓	✓
France	✓	✓	✓		
Gabon	✓	✓	✓	✓	✓
Gambia	✓	✓			
Georgia	✓	✓	✓	✓	
Germany	✓	✓	✓	✓	✓
Ghana	✓	✓	✓		
Greece	✓	✓	✓		
Grenada	✓	✓	✓	✓	
Guatemala	✓	✓	✓	✓	✓
Guinea	✓	✓			
Guinea Bissau	✓	✓	✓	✓	✓
Guyana	✓	✓	✓	✓	
Haiti	✓	✓	✓	✓	
Honduras	✓	✓	✓		
Hungary	✓	✓	✓	✓	✓
Iceland	✓	✓	✓	✓	
India	✓	✓			
Indonesia	✓	✓	✓		
Iran, Islamic	✓	✓	✓	✓	
Ireland	✓	✓	✓		
Israel	✓	✓	✓		
Italy	✓	✓	✓	✓	
Jamaica	✓	✓	✓		
Japan	✓	✓	✓	✓	✓
Jordan	✓	✓	✓	✓	✓
Kazakhstan	✓	✓			
Kenya	✓	✓	✓	✓	
Kiribati	✓				
Korea, Democratic People's Republic of	✓	✓	✓	✓	✓
Korea, Republic of	✓	✓	✓	✓	
Kuwait	✓	✓	✓		
Kyrgyzstan	✓				
Lao, People's Democratic Republic	✓				
Latvia	✓	✓	✓	✓	
Lebanon	✓	✓	✓	✓	
Lesotho	✓				
Liberia	✓	✓	✓		
Libyan Arab Jamahiriya	✓	✓			
Liechtenstein	✓	✓	✓		
Lithuania	✓	✓	✓		
Luxembourg	✓	✓	✓	✓	✓
Madagascar	✓	✓	✓	✓	✓
Malawi	✓	✓	✓		
Malaysia	✓	✓	✓	✓	✓
Maldives	✓	✓	✓	✓	✓
Mali	✓	✓			
Malta	✓	✓			
Marshall Islands	✓	✓	✓		
Mauritania	✓				
Mauritius	✓	✓	✓		
Mexico	✓	✓	✓		
Moldova	✓	✓	✓		
Monaco	✓	✓	✓	✓	
Mongolia	✓	✓	✓	✓	
Morocco	✓	✓	✓		
Mozambique	✓	✓	✓		
Myanmar	✓	✓			
Namibia	✓	✓			
Nauru	✓				
Nepal	✓	✓			
Netherlands	✓	✓	✓	✓	✓
New Zealand	✓	✓	✓	✓	✓
Nicaragua	✓	✓	✓		

Foreign state	Montreal protocol	London amendments	Copenhagen amendments	Montreal amendments	Beijing amendments
Niger	✓	✓	✓	✓	
Nigeria	✓	✓	✓	✓	
Norway	✓	✓	✓	✓	✓
Oman	✓	✓	✓		
Pakistan	✓	✓	✓		
Palau	✓	✓	✓	✓	✓
Panama	✓	✓	✓	✓	✓
Papua New Guinea	✓	✓			
Paraguay	✓	✓	✓	✓	
Peru	✓	✓	✓		
Philippines	✓	✓	✓		
Poland	✓	✓	✓	✓	
Portugal	✓	✓	✓		
Qatar	✓	✓	✓		
Romania	✓	✓	✓	✓	
Russian Federation	✓	✓			
Rwanda	✓				
Saint Kitts & Nevis	✓	✓	✓	✓	
Saint Lucia	✓	✓	✓	✓	✓
Saint Vincent and the Grenadines	✓	✓	✓		
Samoa	✓	✓	✓	✓	✓
Sao Tome and Principe	✓	✓	✓	✓	✓
Saudi Arabia	✓	✓	✓		
Senegal	✓	✓	✓	✓	
Seychelles	✓	✓	✓	✓	✓
Sierra Leone	✓	✓	✓	✓	✓
Singapore	✓	✓	✓	✓	
Slovakia	✓	✓	✓	✓	✓
Slovenia	✓	✓	✓	✓	✓
Solomon Island	✓	✓	✓	✓	
Somalia	✓	✓	✓	✓	✓
South Africa	✓	✓	✓		
Spain	✓	✓	✓	✓	✓
Sri Lanka	✓	✓	✓	✓	✓
Sudan	✓	✓	✓		
Suriname	✓				
Swaziland	✓				
Sweden	✓	✓	✓	✓	✓
Switzerland	✓	✓	✓	✓	✓
Syrian Arab Republic	✓	✓	✓	✓	
Tajikistan	✓	✓			
Tanzania, United Republic of	✓	✓	✓	✓	✓
Thailand	✓	✓	✓		
The Former Yugoslav Republic of Macedonia	✓	✓	✓	✓	✓
Togo	✓	✓	✓	✓	✓
Tonga	✓				
Trinidad and Tobago	✓	✓	✓	✓	
Tunisia	✓	✓	✓	✓	
Turkey	✓	✓	✓		
Turkmenistan	✓	✓			
Tuvalu	✓	✓	✓	✓	
Uganda	✓	✓	✓	✓	
Ukraine	✓	✓	✓		
United Arab Emirates	✓				
United Kingdom	✓	✓	✓	✓	✓
United States of America	✓	✓	✓		
Uruguay	✓	✓	✓	✓	
Uzbekistan	✓	✓	✓		
Vanuatu	✓	✓	✓		
Venezuela	✓	✓	✓	✓	
Viet Nam	✓	✓	✓		
Yemen	✓	✓	✓	✓	
Yugoslavia	✓				
Zambia	✓	✓			

ANNEX 2 TO APPENDIX C OF SUBPART A—NATIONS COMPLYING WITH, BUT NOT PARTIES TO, THE PROTOCOL [RESERVED]

Annex 3 to Appendix C of Subpart A: Nations that are Parties to the Montreal Protocol that have not yet Ratified all applicable Amendments to the Protocol but have Notified the Ozone Secretariat and Properly Submitted Supporting Documentation in Accordance with the Requirements of Decision XV/3.

Non-article 5 parties	Party to the Copenhagen amendment	Party to the Beijing Amendment	Parties that have submitted data in accordance with Dec. XV/3, para 1 (c)(iii)		
			1(c)(ii)	1(c)(ii), Article 2, 2A–2G	1(c)(ii), Article 4
Australia	Yes	No	Yes	Yes	Yes
Austria	Yes	No.			
Azerbaijan	Yes	No.			
Belarus	No	No.			
Belgium	Yes	No.			
Bulgaria	Yes	Yes.			
Canada	Yes	Yes.			
Czech Republic	Yes	Yes.			
Denmark	Yes	Yes.			
Estonia	Yes	No.			
European Community	Yes	Yes.			
Finland	Yes	Yes.			
France	Yes	Yes.			
Germany	Yes	Yes.			
Greece	Yes	No	Yes	Yes	Yes
Hungary	Yes	Yes.			
Iceland	Yes	Yes.			
Ireland	Yes	No.			
Israel	Yes	No.			
Italy	Yes	No	Yes	Yes	Yes
Japan	Yes	Yes.			
Kazakhstan	No	No	Yes	Yes	Yes
Latvia	Yes	No.			
Liechtenstein	Yes	Yes.			
Lithuania	Yes	No	Yes.		
Luxembourg	Yes	Yes.			
Monaco	Yes	Yes.			
Netherlands	Yes	Yes.			
New Zealand	Yes	Yes.			
Norway	Yes	Yes.			
Poland	Yes	No	Yes	Yes	Yes
Portugal	Yes	No	Yes	Yes	Yes
Russian Federation	No	No.			
Slovakia	Yes	Yes.			
Slovenia	Yes	Yes.			
Spain	Yes	Yes.			
Sweden	Yes	Yes.			
Switzerland	Yes	Yes.			
Tajikistan	No	No.			
Turkmenistan	No	No.			
Ukraine	Yes	No.			
United Kingdom	Yes	Yes.			
United States of America	Yes	Yes.			
Uzbekistan	Yes	No.			

ANNEX 4 TO APPENDIX C OF SUBPART A: NATIONS THAT ARE PARTIES TO THE MONTREAL PROTOCOL AND ARE OPERATING UNDER ARTICLE 5(1)

LIST OF ARTICLE 5 PARTIES

1. Afghanistan
2. Albania
3. Algeria
4. Angola
5. Antigua & Barbuda
6. Argentina
7. Armenia
8. Bahamas
9. Bahrain
10. Bangladesh
11. Barbados
12. Belize
13. Benin
14. Bhutan
15. Bolivia
16. Bosnia and Herzegovina
17. Botswana
18. Brazil
19. Brunei Darussalam
20. Burkina Faso
21. Burundi
22. Cambodia
23. Cameroon
24. Cape Verde
25. Central African Republic
26. Chad
27. Chile
28. China
29. Colombia
30. Comoros
31. Congo
32. Congo, Democratic Republic of
33. Cook Islands
34. Cost Rica

35. Côte d'Ivoire
36. Croatia
37. Cuba
38. Djibouti
39. Dominica
40. Dominican Republic
41. Ecuador
42. Egypt
43. El Salvador
44. Equatorial Guinea
45. Eritrea
46. Ethiopia
47. Fiji
48. Gabon
49. Gambia
50. Georgia
51. Ghana
52. Grenada
53. Guatemala
54. Guinea
55. Guinea Bissau
56. Guyana
57. Haiti
58. Honduras
59. India
60. Indonesia
61. Iran, Islamic Republic of
62. Iraq
63. Jamaica
64. Jordan
65. Kenya
66. Kiribati
67. Korea, People's Democratic Republic of
68. Korea, Republic of
69. Kuwait
70. Kyrgyzstan
71. Lao People's Democratic Republic
72. Lebanon
73. Lesotho
74. Liberia
75. Libyan Arab Jamahiriya
76. Madagascar
77. Malawi
78. Malaysia
79. Maldives
80. Mali
81. Marshall Islands
82. Mauritania
83. Mauritius
84. Mexico
85. Micronesia, Federal States of
86. Moldova
87. Mongolia
88. Montenegro
89. Morocco
90. Mozambique
91. Myanmar
92. Namibia
93. Nauru
94. Nepal
95. Nicaragua
96. Niger
97. Nigeria
98. Niue
99. Oman
100. Pakistan
101. Palau
102. Panama
103. Papua New Guinea
104. Paraguay
105. Peru
106. Philippines
107. Qatar
108. Rwanda
109. Saint Kitts and Nevis
110. Saint Lucia
111. Saint Vincent & the Grenadines
112. Samoa
113. Sao Tome and Principe
114. Saudi Arabia
115. Senegal
116. Serbia
117. Seychelles
118. Sierra Leone
119. Singapore
120. Solomon Islands
121. Somalia
122. South Africa
123. Sri Lanka
124. Sudan
125. Suriname
126. Swaziland
127. Syrian Arab Republic
128. Tanzania, United Republic of
129. Thailand
130. The Former Yugoslav Republic of Macedonia
131. Timor-Leste
132. Togo
133. Tonga
134. Trinidad and Tobago
135. Tunisia
136. Turkey
137. Turkmenistan
138. Tuvalu
139. Uganda
140. United Arab Emirates
141. Uruguay
142. Vanuatu
143. Venezuela
144. Viet Nam
145. Yemen
146. Zambia
147. Zimbabwe

[68 FR 43936, July 25, 2003, as amended at 69 FR 34031, June 17, 2004; 74 FR 66447, Dec. 15, 2009]

APPENDIX D TO SUBPART A OF PART 82—HARMONIZED TARIFF SCHEDULE DESCRIPTION OF PRODUCTS THAT MAY CONTAIN CONTROLLED SUBSTANCES IN APPENDIX A, CLASS I, GROUPS I AND II

This Appendix is based on information provided by the Ozone Secretariat of the United Nations Ozone Environment Programme.**

** "A Note Regarding the Harmonized System Code Numbers for the Products Listed in Annex D." Adopted by Decision IV/15 paragraph 3, of the Fourth Mee The Appendix

The Harmonized Tariff Schedule of the United States uses an enumeration system to identify products imported and exported to and from the U.S. This system relies on a four digit heading, a four digit subheading and additional two digit statistical suffix to characterize products. The United States uses the suffix for its own statistical records and analyses. This Appendix lists only headings and subheadings.

While some can be readily associated with harmonized system codes, many products cannot be tied to HS classifications unless their exact composition and the presentation are known. It should be noted that the specified HS classifications represent the most likely headings and subheadings which may contain substances controlled by the Montreal Protocol. The codes given should only be used as a starting point; further verfication is needed to ascertain whether or not the products actually contain controlled substances.

CATEGORY 1. AUTOMOBILE AND TRUCK AIR CONDITIONING UNITS (WHETHER INCORPORATED IN VEHICLES OR NOT)

There are no separate code numbers for air conditioning units specially used in automobiles and trucks. Although a code has been proposed for car air conditioners, it is not yet officially listed in the Harmonized Tariff Schedule (see category 2). The following codes apply to the vehicles potentially containing air conditioning units.

Heading/Subheading	*Article Description*
8701.(10, 20, 30, 90)***	Tractors.
8702	Public-transport type passenger motor vehicles.
8702.10	With compression-ignition internal-combustion piston engine (diesel or semi-diesel).
8702.90	Other.
8703	Motor cars and other motor vehicles principally designed for the transport of persons (other than those of heading 8702), including station wagons and racing cars.
8703.10	Vehicles specially designed for traveling on snow; golf carts and similar vehicles; includes subheading 10.10 and 10.50.
8703.(21, 22, 23, 24)	Other vehicles, with spark-ignition internal combustion reciprocating engines.
8703.(31, 32, 33, 90)	Other vehicles, with compression-ignition internal combustion piston engine (diesel or semi-diesel).
8704	Motor vehicles for the transport of goods.
8704.10.(10, 50)	Dumpers designed for off-highway use.
8704.(21, 22, 23)	Other, with compression-ignition internal combustion piston engine (diesel or semi-diesel).
8704.(31, 32, 90)	Other, with compression-ignition internal combustion piston engine.
8705	Special purpose motor vehicles, other than those principally designed for the transport of persons or goods (for example, wreckers, mobile cranes, fire fighting vehicles, concrete mixers, road sweepers, spraying vehicles, mobile workshops, mobile radiological units).
8705.10	Crane lorries.
8705.20	Mobile drilling derricks.
8705.30	Fire fighting vehicles.
8705.90	Other.

***At this time vehicle air conditioning units are considered components of vehicles or are classified under the general category for air conditioning and refrigeration equipment. Vehicles containing air conditioners are therefore considered products containing controlled substances.

CATEGORY 2. DOMESTIC AND COMMERCIAL REFRIGERATION AND AIR CONDITIONING/HEAT PUMP EQUIPMENT

Domestic and commercial air conditioning and refrigeration equipment fall primarily under headings 8415 and 8418.

lists available U.S. harmonized tariff schedule codes identifying headings and subheadings for Annex D products that may contain controlled substances. ting of the Parties in Copenhagen, 23–25 November, 1992.

Heading/Subheading	*Article Description*
8415	Air conditioning machines, comprising a motor-driven fan and elements for changing the temperature and humidity, including those machines in which the humidity cannot be separately regulated.
8415.20	Proposed code for air conditioning of a kind used for persons, in motor vehicles.
8415.10.00	A/C window or wall types, self-contained.
8415.81.00	Other, except parts, incorporating a refrigerating unit and a valve for reversal of the cooling/heat cycle.
8415.82.00	Other, incorporating a refrigerating unit—
	Self-contained machines and remote condenser type air conditioners (not for year-round use).
	Year-round units (for heating and cooling).
	Air Conditioning evaporator coils.
	Dehumidifiers.
	Other air conditioning machines incorporating a refrigerating unit.
8415.83	Automotive air conditioners.
8418	Refrigerators, freezers and other refrigerating or freezing equipment, electric or other; heat pumps, other than air conditioning machines of heading 8415; parts thereof.
8418.10.00	Combined refrigerator-freezers, fitted with separate external doors.
8418.21.00	Refrigerators, household type, Compression type.
8418.22.00	Absorption type, electrical.
8418.29.00	Other.
8418.30.00	Freezers of the chest type.
8418.40	Freezers of the upright type.
8418.50.0040	Other refrigerating or freezing chests, cabinets, display counters, showcases and similar refrigerating or freezing furniture.
8418.61.00	Other refrigerating or freezing equipment; heat pumps.
8418.69	Other—
	Icemaking machines.
	Drinking water coolers, self-contained.
	Soda fountain and beer dispensing equipment.
	Centrifugal liquid chilling refrigerating units.
	Absorption liquid chilling units.
	Reciprocating liquid chilling units.
	Other refrigerating or freezing equipment (household or other).
8479.89.10	Dehumidifiers (other than those under 8415 or 8424 classified as ''machines and mechanical appliances having individual functions, not specified or included elsewhere'').

CATEGORY 3. AEROSOL PRODUCTS

An array of different products use controlled substances as aerosols and in aerosol applications. Not all aerosol applications use controlled substances, however. The codes given below represent the most likely classifications for products containing controlled substances. The product codes listed include ****:

**** Other categories of products that may contain controlled substances are listed below. EPA is currently working to match them with appropriate codes. They include: coatings and electronic equipment (e.g., electrical motors), coatings or cleaning fluids for aircraft maintenance, mold release agents (e.g. for production of plastic or elastomeric materials), water and oil repellant (potentially under HS 3402), spray undercoats (potentially under ''paints and varnishes''), spot removers, brake cleaners, safety sprays (e.g., mace cans), animal repellant, noise horns

- varnishes
- perfumes
- preparations for use on hair
- preparations for oral and dental hygiene
- shaving preparations
- personal deodorants, bath preparations
- prepared room deodorizers
- soaps
- lubricants
- polishes and creams
- explosives
- insecticides, fungicides, herbicides, disinfectants
- arms and ammunition
- household products such as footwear or leather polishes
- other miscellaneous products

Heading/Subheading	*Article Description*
3208	Paints and varnishes***** (including enamels and lacquers) based on synthetic polymers of chemically modified natural polymers, dispersed or dissolved in a non-aqueous medium.
3208.10	Based on polyesters.
3208.20	Based on acrylic or vinyl polymers.
3208.90	Other.
3209	Paints and varnishes (including enamels and lacquers) based on synthetic polymers or chemically modified natural polymers, dispersed or dissolved in an aqueous medium.
3209.10	Based on acrylic or vinyl polymers.
3209.90	Other.
3210.00	Other paints and varnishes (including enamels, lacquers and distempers) and prepared water pigments of a kind used for finishing leather.
3212.90	Dyes and other coloring matter put up in forms or packings for retail sale.
3303.00	Perfumes and toilet waters.
3304.30	Manicure or pedicure preparations.
3305.10	Shampoos.
3305.20	Preparations for permanent waving or straightening.
3305.30	Hair lacquers.
3305.90	Other hair preparations.
3306.10	Dentrifices.
3306.90	Other dental (this may include breath sprays).
3307.10	Pre-shave, shaving or after-shave preparations.
3307.20	Personal deodorants and antiperspirants.
3307.30	Perfumed bath salts and other bath preparations.
3307.49	Other (this may include preparations for perfuming or deodorizing rooms, including odoriferous preparations used during religious rites, whether or not perfumed or having disinfectant properties).
3307.90	Other (this may include depilatory products and other perfumery, cosmetic or toilet preparations, not elsewhere specified or included)

(e.g., for use on boats), weld inspection developers, freezants, gum removers, intruder alarms, tire inflators, dusters (for electronic and non-electronic applications), spray shoe polish, and suede protectors.

Heading/Subheading	*Article Description*
3403	Lubricating preparations (including cutting-oil preparations, bolt or nut release preparations, anti-rust or anti-corrosion preparations and mould release preparations, based on lubricants), and preparations of a kind used for the oil or grease treatment of textile materials, leather, fur skins or other materials, but excluding preparations containing, as basic constituents, 70 percent or more by weight of petroleum oils or of oils obtained from bituminous minerals.
3402	Organic surface-active agents (other than soap); surface-active preparations, washing preparations and cleaning operations, whether or not containing soap, other than those of 3401.
3402.20	Preparations put up for retail sale.
3402.19	Other preparations containing petroleum oils or oils obtained from bituminous minerals.
3403	Lubricating preparations consisting of mixtures containing silicone greases or oils, as the case may be.
2710.00	Preparations not elsewhere specified or included, containing by weight 70 percent or more of petroleum oils or of oils obtained from bituminous minerals, these oils being the basic constituents of the preparations.
3403.11	Lubricants containing petroleum oils or oils obtained from bituminous minerals used for preparations from the treatment of textile materials, leather, fur skins or other materials.
3403.19	Other preparations containing petroleum oils or oils obtained from bituminous minerals.
3405	Polishes and creams, for footwear, furniture, floors, coachwork, glass or metal, scouring pastes and powders and similar preparations excluding waxes of heading 3404.
3405.10	Polishes and creams for footwear or leather.
3405.20	Polishes for wooden furniture, floors or other woodwork.
36	Explosives.
3808	Insecticides, rodenticides, fungicides, herbicides, anti-sprouting products and plant-growth regulators, disinfectants and similar products, put up in forms or packings for retail sale or as preparations or articles (for example, sulphur-treated bands, wicks and candles, and fly papers).
3808.10	Insecticides.
3808.20	Fungicides.
3808.30	Herbicides, anti-sprouting products and plant growth regulators.
3808.40	Disinfectants.
3808.90	Other insecticides, fungicides.
3809.10	Finishing agents, dye carriers to accelerate the dyeing or fixing of dye-stuffs and other products and preparations (for example, dressings and mordants) of a kind used in the textile, paper, leather or like industries, not elsewhere specified or included, with a basis of amylaceous substances.
3814	Organic composite solvents and thinners (not elsewhere specified or included) and the prepared paint or varnish removers.
3910	Silicones in primary forms.
9304	Other arms (for example, spring, air or gas guns and pistols, truncheons), excluding those of heading No. 93.07. Thus, aerosol spray cans containing tear gas may be classified under this subheading.
0404.90	Products consisting of natural milk constituents, whether or not containing added sugar or other sweetening matter, not elsewhere specified or included.

Heading/Subheading	*Article Description*
1517.90	Edible mixtures or preparations of animal or vegetable fats or oils or of fractions of different fats or oils of this chapter, other than edible fats or oils or their fractions of heading No. 15.16.
2106.90	Food preparations not elsewhere specified or included.

***** Although paints do not generally use contain controlled substances, some varnishes use CFC 113 and 1,1,1,trichlorethane as solvents.

CATEGORY 4. PORTABLE FIRE EXTINGUISHERS

Heading/Subheading	*Article Description*
8424	Mechanical appliances (whether or not hand operated) for projecting, dispersing, or spraying liquids or powders; fire extinguishers whether or not charged, spray guns and similar appliances; steam or sand blasting machines and similar jet projecting machines.
8424.10	Fire extinguishers, whether or not charged.

CATEGORY 5. INSULATION BOARDS, PANELS AND PIPE COVERS

These goods have to be classified according to their composition and presentation. For example, if the insulation materials are made of polyurethane, polystyrene, polyolefin and phenolic plastics, then they may be classified Chapter 39, for ''Plastics and articles thereof''. The exact description of the products at issue is necessary before a classification can be given. ******

Heading/Subheading	*Article Description*
3917.21 to 3917.39	Tubes, pipes and hoses of plastics.
3920.10 to 3920.99	Plates, sheets, film, foil and strip made of plastics, non-cellular and not reinforced, laminated, supported or similarly combined with other materials.
3921.11 to 3921.90	Other plates, sheets, film, foil and strip, made of plastics.
3925.90	Builders' ware made of plastics, not elsewhere specified or included.
3926.90	Articles made of plastics, not elsewhere specified or included.

CATEGORY 6. PRE-POLYMERS

According to the Explanatory Notes to the Harmonized Commodity Description and Coding System, ''prepolymers are products which are characterized by some repetition of monomer units although they may contain unreacted monomers. Prepolymers are not normally used as such but are intended to be transformed into higher molecular weight polymers by further polymerization. Therefore the term does not cover finished products, such as di-isobutylenes or mixed polyethylene glycols with very low molecular weight. Examples are epoxides based with epichlorohydrin, and polymeric isocyanates.''

Heading/Subheading	*Article Description*
3901	Pre-polymers based on ethylene (in primary forms).
3902	Pre-polymers based on propylene or other olefins (in primary forms).
3903, 3907, 3909	Pre-polymers based on styrene (in primary forms), epoxide and phenols.

****** This category may include insulating board for building panels and windows and doors. It also includes rigid appliance insulation for pipes, tanks, trucks, trailers, containers, train cars & ships, refrigerators, freezers, beverage vending machines, bulk beverage dispensers, water coolers and heaters and ice machines.

APPENDIX E TO SUBPART A OF PART 82—ARTICLE 5 PARTIES

Afghanistan
Albania
Algeria
Angola
Antigua & Barbuda
Argentina
Armenia
Bahamas
Bahrain
Bangladesh
Barbados
Belize
Benin
Bhutan
Bolivia
Bosnia and Herzegovina
Botswana
Brazil
Brunei Darussalam
Burkina Faso
Burundi
Cambodia
Cameroon
Cape Verde
Central African Republic
Chad
Chile
China
Colombia
Comoros
Congo
Congo Democratic Republic of
Cook Islands
Cost Rica
Côte d'Ivoire
Croatia
Cuba
Djibouti
Dominica
Dominican Republic
Ecuador
Egypt
El Salvador
Equatorial Guinea
Eritrea
Ethiopia
Fiji
Gabon
Gambia
Georgia
Ghana
Grenada
Guatemala
Guinea
Guinea Bissau
Guyana
Haiti
Honduras
India
Indonesia
Iran, Islamic Republic of
Iraq
Jamaica
Jordan
Kenya
Kiribati
Korea, People's Democratic Republic of
Korea Republic of
Kuwait
Kyrgyzstan
Lao People's Democratic Republic
Lebanon
Lesotho
Liberia
Libyan Arab Jamahiriya
Madagascar
Malawi
Malaysia
Maldives
Mali
Marshall Islands
Mauritania
Mauritius
Mexico
Micronesia, Federal States of
Moldova
Mongolia
Montenegro
Morocco
Mozambique
Myanmar
Namibia
Nauru
Nepal
Nicaragua
Niger
Nigeria
Niue
Oman
Pakistan
Palau
Panama
Papua New Guinea
Paraguay
Peru
Philippines
Qatar
Rwanda
Saint Kitts and Nevis
Saint Lucia
Saint Vincent & the Grenadines
Samoa
Sao Tome and Principe
Saudi Arabia
Senegal
Serbia
Seychelles
Sierra Leone
Singapore
Solomon Islands
Somalia
South Africa
Sri Lanka
Sudan
Suriname
Swaziland
Syrian Arab Republic
Tanzania, United Republic of
Thailand
The Former Yugoslav Republic of Macedonia
Timor-Leste
Togo
Tonga
Trinidad and Tobago
Tunisia
Turkey
Turkmenistan
Tuvalu
Uganda
United Arab Emirates
Uruguay
Vanuatu
Venezuela
Viet Nam
Yemen
Zambia
Zimbabwe.

[74 FR 66448, Dec. 15, 2009]

APPENDIX F TO SUBPART A OF PART 82—LISTING OF OZONE-DEPLETING CHEMICALS

Controlled substance	ODP	AT L	CLP	BLP
A. Class I:				
1. Group I:				
$CFCl_3$-Trichlorofluoromethane (CFC-11)	1.0	60.0	1.0	0.00
CF_2 Cl_2-Dichlorodifluoromethane (CFC-12)	1.0	120.0	1.5	0.00
C_2 F_3 Cl_3-Trichlorotrifluoroethane (CFC-113)	0.8	90.0	1.11	0.00
C_2 F_4 Cl_2-Dichlorotetrafluoroethane (CFC-114)	1.0	200.00	1.8	0.00
C_2 F_5 Cl-Monochloropentafluoroethane (CFC-115)	0.6	400.0	2.0	0.00
All isomers of the above chemicals	[Reserved]			
2. Group II:				
CF_2 ClBr-Bromochlorodifluoromethane (Halon-1211)	3.0	12	0.06	0.13
	.....	−18	−.08	−.03
CF_3 Br-Bromotrifluoromethane (Halon-1301)	10.0	72	0.00	1.00
	.....	−107		
C_2 F_4 Br_2-Dibromotetrafluoroethane (Halon-2402)	6.0	23	0.00	0.30
	.....	−28	.....	−.37
All isomers of the above chemicals	[Reserved]			

Controlled substance	ODP	AT L	CLP	BLP
3. Group III:				
CF_3 Cl-Chlorotrifluoromethane (CFC-13)	1.0	120	0.88	0.00
	−250	−1.83		
C_2 FCl_5- (CFC-111)	1.0	60	1.04	0.00
	−90	−1.56		
C_2 F_2 Cl_4- (CFC-112)	1.0	60	0.90	0.00
	−90	−1.35		
C_3 FCl_7- (CFC-211)	1.0	100	1.76	0.00
	−500	−8.81		
C_3 F_2 Cl_6- (CFC-212)	1.0	100	1.60	0.00
	−500	−7.98		
C_3 F_3 Cl_5- (CFC-213)	1.0	100	1.41	0.00
	−500	−7.06		
C_3 F_4 Cl_4- (CFC-214)	1.0	100	1.20	0.00
	−500	−6.01		
C_3 F_5 Cl_3 -(CFC-215)	1.0	100	0.96	0.00
	−500	−4.82		
C_3 F_6 Cl_2- (CFC-216)	1.0	100	0.69	0.00
	−500	−3.45		
C_3 F_7 Cl- (CFC-217)	1.0	100	0.37	0.00
	−500	−1.87		
All isomers of the above chemicals		[Reserved]		
4. Group IV:				
CCl_4 -Carbon Tetrachloride	1.1	50.0	1.0	0.00
5. Group V:				
C_2 H_3 Cl_3-1,1,1 Trichloroethane (Methyl chloroform)	0.1	6.3	0.11	0.00
All isomers of the above chemical except 1,1,2-trichloroethane		[Reserved]		
6. Group VI:				
CH3Br-Bromomethane (Methyl Bromide)	0.7		[Reserved]	
7. Group VII:				
$CHFBr_2$-	1.00		[Reserved]	
CHF_2Br-(HBFC–22B1)	0.74		[Reserved]	
CH_2FBr	0.73		[Reserved]	
C_2HFBr_4	0.3–0.8		[Reserved]	
$C_2HF_2Br_3$	0.5–1.8		[Reserved]	
$C_2HF_3Br_2$	0.4–16		[Reserved]	
C_2HF_4Br	0.7–1.2		[Reserved]	
$C_2H_2FBr_3$	0.1–1.1		[Reserved]	
$C_2H_2F_2Br_2$	0.2–1.5		[Reserved]	
$C_2H_2F_3Br$	0.7–1.6		[Reserved]	
$C_2H_3FBr_2$	0.1–1.7		[Reserved]	
$C_2H_3F_2Br$	0.2–1.1		[Reserved]	
C_2H_4FBr	0.07–0.1		[Reserved]	
C_3HFBr_6	0.3–1.5		[Reserved]	
$C_3HF_2Br_5$	0.2–1.9		[Reserved]	
$C_3HF_3Br_4$	0.3–1.8		[Reserved]	
$C_3HF_4Br_3$	0.5–2.2		[Reserved]	
$C_3HF_5Br_2$	0.9–2.0		[Reserved]	
C_3HF_6Br	0.7–3.3		[Reserved]	
$C_3H_2FBr_5$	0.1–1.9		[Reserved]	
$C_3H_2F_2Br_4$	0.2–2.1		[Reserved]	
$C_3H_2F_3Br_3$	0.2–5.6		[Reserved]	
$C_3H_2F_4Br_2$	0.3–7.5		[Reserved]	
$C_3H_2F_5Br$	0.9–1.4		[Reserved]	
$C_3H_3FBR_4$	0.08–1.9		[Reserved]	
$C_3H_3F_2Br_3$	0.1–3.1		[Reserved]	
$C_3H_3F_3Br_2$	0.1–2.5		[Reserved]	
$C_3H_3F_4Br$	0.3–4.4		[Reserved]	
$C_3H_4FBr_3$	0.03–0.3		[Reserved]	
$C_3H_4F_2Br_2$	0.1–1.0		[Reserved]	
$C_3H_4F_3Br$	0.07–0.8		[Reserved]	
$C_3H_5FBr_2$	0.04–0.4		[Reserved]	
$C_3H_5F_2Br$	0.07–0.8		[Reserved]	
C_3H_6FB	0.02–0.7		[Reserved]	
8. Group VIII:				
CH_2BrCl (Chlorobromomethane)	0.12		[Reserved]	
B. Class II:				
$CHFCl_2$-Dichlorofluoromethane (HCFC-21)	[Reserved]	2.1	0.03	0.00
CHF_2 Cl-Chlorodifluoromethane (HCFC-22)	0.05	15.3	0.14	0.00
CH_2 FCl-Chlorofluoromethane (HCFC-31)	[Reserved]	1.44	0.02	0.00
C_2 $HFCl_4$- (HCFC-121)	[Reserved]	0.6	0.01	0.00
C_2 HF_2 Cl_3- (HCFC-122)	[Reserved]	1.4	0.02	0.00

Controlled substance	ODP	AT L	CLP	BLP
C_2 HF_3 Cl_2- (HCFC-123)	0.02	1.6	0.016	0.00
C_2 HF_4 Cl- (HCFC-124)	0.02	6.6	0.04	0.00
C_2 H_2 FCl_3- (HCFC-131)	[Reserved]	4.0	0.06	0.00
C_2 H_2 F_2 Cl_2- (HCFC-132b)	[Reserved]	4.2	0.05	0.00
C_2 H_2 F_3 Cl- (HCFC-133a)	[Reserved]	4.8	0.03	0.00
C_2 H_3 FCl_2- (HCFC-141b)	0.12	7.8	0.10	0.00
C_2 H_3 F_2 Cl- (HCFC-142b)	0.06	19.1	0.14	0.00
C_3 $HFCl_6$- (HCFC-221)	[Reserved]			0.00
C_3 HF_2 Cl_5- (HCFC-222)	[Reserved]			0.00
C_3 HF_3 Cl_4- (HCFC-223)	[Reserved]			0.00
C_3 HF_4 Cl_3- (HCFC-224)	[Reserved]			0.00
C_3 HF_5 Cl_2- (HCFC-225ca)	[Reserved]	1.5	0.01	0.00
		−1.7		
(HCFC-225cb)	[Reserved]	5.1	0.04	0.00
C_3 HF_6 Cl- (HCFC-226)	[Reserved]			0.00
C_3 H_2 FCl_5- (HCFC-231)	[Reserved]			0.00
C_3 H_2 F_{24}- (HCFC-232)	[Reserved]			0.00
C_3 H_2 F_3 Cl_3- (HCFC-233)	[Reserved]			0.00
C_3 H_2 F_4 Cl_2- (HCFC-234)	[Reserved]			0.00
C_3 H_2 F_5 Cl- (HCFC-235)	[Reserved]			0.00
C_3 H_3 FCl_4- (HCFC-241)	[Reserved]			0.00
C_3 H_3 F_2 Cl_3- (HCFC-242)	[Reserved]			0.00
C_3 H_3 F_3 Cl_2- (HCFC-243)	[Reserved]			0.00
C_3 H_3 F_4 Cl- (HCFC-244)	[Reserved]			0.00
C_3 H_4 FCl_3- (HCFC-251)	[Reserved]			0.00
C_3 H_4 F_2 Cl_2- (HCFC-252)	[Reserved]			0.00
C_3 H_4 F_3 Cl- (HCFC-253)	[Reserved]			0.00
C_3 H_5 FCl_2- (HCFC-261)	[Reserved]			0.00
C_2 H_5 F_2 Cl- (HCFC-262)	[Reserved]			0.00
C_3 H_6 FCl- (HCFC-271)	[Reserved]			0.00
All isomers of the above chemicals	[Reserved]			

[60 FR 24986, May 10, 1995, as amended at 68 FR 42894, July 18, 2003]

Appendix G to Subpart A of Part 82—UNEP Recommendations for Conditions Applied to Exemption for Essential Laboratory and Analytical Uses

1. Essential laboratory and analytical uses are identified at this time to include equipment calibration; use as extraction solvents, diluents, or carriers for chemical analysis; biochemical research; inert solvents for chemical reactions, as a carrier or laboratory chemical and other critical analytical and laboratory purposes. Pursuant to Decision XI/15 of the Parties to the Montreal Protocol, effective January 1, 2002 the following uses of class I controlled substances are not considered essential under the global laboratory exemption:

a. Testing of oil and grease and total petroleum hydrocarbons in water;

b. Testing of tar in road-paving materials; and

c. Forensic finger printing.

Production for essential laboratory and analytical purposes is authorized provided that these laboratory and analytical chemicals shall contain only controlled substances manufactured to the following purities:

CTC (reagent grade)—99.5
1,1,1,-trichloroethane—99.5
CFC-11—99.5
CFC-13—99.5
CFC-12—99.5
CFC-113—99.5
CFC-114—99.5
Other w/ Boiling P>20 degrees C—99.5
Other w/ Boiling P<20 degrees C—99.0

d. Testing of organic matter in coal.

2. These pure, controlled substances can be subsequently mixed by manufacturers, agents or distributors with other chemicals controlled or not controlled by the Montreal Protocol as is customary for laboratory and analytical uses.

3. These high purity substances and mixtures containing controlled substances shall be supplied only in re-closable containers or high pressure cylinders smaller than three litres or in 10 millilitre or smaller glass ampoules, marked clearly as substances that deplete the ozone layer, restricted to laboratory use and analytical purposes and specifying that used or surplus substances should be collected and recycled, if practical. The material should be destroyed if recycling is not practical.

4. Parties shall annually report for each controlled substance produced: the purity; the quantity; the application, specific test standard, or procedure requiring its uses; and the status of efforts to eliminate its use in each application. Parties shall also submit copies of published instructions, standards, specifications, and regulations requiring the use of the controlled substance.

5. Pursuant to Decision XVIII/15 of the Parties to the Montreal Protocol, methyl bromide is exempted for the following approved essential laboratory and analytical purposes listed in following items (a) through (d). Use of methyl bromide for field trials is not an approved use under the global laboratory and analytical use exemption. The provisions of Appendix G, paragraphs (1), (2), (3), and (4), regarding purity, mixing, container, and reporting requirements for other exempt ODSs, also apply to the use of methyl bromide under this exemption.

a. Methyl bromide is exempted as an approved essential laboratory and analytical use as a reference or standard to calibrate equipment which uses methyl bromide, to monitor methyl bromide emission levels, or to determine methyl bromide residue levels in goods, plants and commodities;

b. Methyl bromide is exempted as an approved essential laboratory and analytical when used in laboratory toxicological studies;

c. Methyl bromide is exempted as an approved essential laboratory and analytical use to compare the efficacy of methyl bromide and its alternatives inside a laboratory; and

d. Methyl bromide is exempted as an approved essential laboratory and analytical use as a laboratory agent which is destroyed in a chemical reaction in the manner of feedstock.

[60 FR 24986, May 10, 1995, as amended at 67 FR 6362, Feb. 11, 2002; 72 FR 73269, Dec. 27, 2007]

Appendix H to Subpart A of Part 82—Clean Air Act Amendments of 1990 Phaseout Schedule for Production of Ozone-Depleting Substances

Date	Carbon tetrachloride (percent)	Methyl chloroform (percent)	Other class substances (percent)
1994	70	85	65
1995	15	70	50
1996	15	50	40
1997	15	50	15
1998	15	50	15
1999	15	50	15
2000	.....	20	
2001	.....	20	

Appendix I to Subpart A of Part 82—Global Warming Potentials (Mass Basis), Referenced to the Absolute GWP for the Adopted Carbon Cycle Model CO_2 Decay Response and Future CO_2 Atmospheric Concentrations Held Constant at Current Levels. (Only Direct Effects Are Considered.)

Species (chemical)	Chemical formula	Global warming potential (time horizon)		
		20 years	100 years	500 years
CFC-11	$CFCl_3$	5000	4000	1400
CFC-12	$CF_2 Cl_2$	7900	8500	4200
CFC-13	$CClF_3$	8100	11700	13600
CFC-113	$C_2 F_3 Cl_3$	5000	5000	2300
CFC-114	$C_2 F_4 Cl_2$	6900	9300	8300
CFC-115	$C_2 F_5 Cl$	6200	9300	13000
H–1301	$CF_3 Br$	6200	5600	2200
Carbon Tet	CCl_4	2000	1400	500
Methyl Chl	$CH_3 CCl_3$	360	110	35
HCFC-22	$CF_2 HCl$	4300	1700	520
HCFC-141b	$C_2 FH_3 Cl_2$	1800	630	200
HCFC-142b	$C_2 F_2 H_3 Cl$	4200	2000	630
HCFC-123	$C_2 F_3 HCl_2$	300	93	29
HCFC-124	$C_2 F_4 HCl$	1500	480	150
HCFC-225ca	$C_3 F_5 HCl_2$	550	170	52
HCFC-225cb	$C_3 F_5 HCl_2$	1700	530	170

AUnited Nations Environment Programme (UNEP), February 1995, Scientific Assessment of Ozone Depletion: 1994, Chapter 13, ''Ozone Depleting Potentials, Global Warming Potentials and Future Chlorine/Bromine Loading,'' and do not reflect review of scientific documents published after that date.

[61 FR 1285, Jan. 19, 1996]

APPENDIX J TO SUBPART A OF PART 82—PARTIES TO THE MONTREAL PROTOCOL CLASSIED UNDER ARTICLE 5(1) THAT HAVE BANNED THE IMPORT OF CONTROLLED PRODUCTS THAT RELY ON CLASS I CONTROLLED SUBSTANCES FOR THEIR CONTINUING FUNCTIONING [RESERVED]

APPENDIX K TO SUBPART A OF PART 82—COMMODITY CODES FROM THE HARMONIZED TARIFF SCHEDULE FOR CONTROLLED SUBSTANCES AND USED CONTROLLED SUBSTANCES

Description of commodity or chemical	Commodity code from harmonized tariff schedule
CFC-11	2903.41.0000
CFC-12	2903.42.0000
CFC-113	2903.43.0000
CFC-114	2903.44.0010
CFC-115	2903.44.0020
HALONS	2903.46.0000
CFC-13, CFC-111, CFC-112, CFC-211, CFC-212, CFC-213, CFC-214, CFC-215, CFC-216, CFC-217	2903.45.0000
HCFC-22	2903.49.9010
HCFC-21, HCFC-31, HCFC-123, HCFC-124, HCFC-133, HCFC-141b, HCFC-142b, HCFC-225	2903.49.0000
OTHER, HALOGENATED	2903.49.9060
MIXTURES (R–500, R–502, ETC.)	3824.71.0000
MIXTURES, OTHER	3824.79.0000
CARBON TETRACHLORIDE	2903.14.0000
METHYL CHLOROFORM	2903.19.6010
METHYL BROMIDE	2903.30.1520

[63 FR 41651, Aug. 4, 1998]

APPENDIX L TO SUBPART A OF PART 82—APPROVED CRITICAL USES AND LIMITING CRITICAL CONDITIONS FOR THOSE USES FOR THE 2012 CONTROL PERIOD

Approved critical uses Column A	Approved critical user and location of use Column B	Limiting critical conditions that exist, or that the approved critical user reasonably expects could arise without methyl bromide fumigation Column C
	PRE–PLANT USES	
Cucurbits	(a) Growers in Delaware and Maryland	Moderate to severe soilborne disease infestation. Moderate to severe yellow or purple nutsedge infestation.
	(b) Growers in Georgia and Southeastern U.S. limited to growing locations in Alabama, Arkansas, Kentucky, Louisiana, Mississippi, North Carolina, South Carolina, Tennessee, and Virginia.	Moderate to severe soilborne disease infestation. Moderate to severe root knot nematode infestation.
Eggplant	(a) Florida growers	Moderate to severe yellow or purple nutsedge infestation. Moderate to severe soilborne disease infestation. Restrictions on alternatives due to karst topographical features and soils not supporting seepage irrigation.
	(b) Georgia growers	Moderate to severe yellow or purple nutsedge infestation. Moderate to severe nematode infestation. Moderate to severe pythium collar, crown and root rot. Moderate to severe southern blight infestation. Restrictions on alternatives due to karst topographical features.
Forest Nursery Seedlings	(a) Southern Forest Nursery Management Cooperative (Growers in Alabama, Arkansas, Florida, Georgia, Kentucky, Louisiana, Mississippi, North Carolina, Oklahoma, South Carolina, Tennessee, Texas, and Virginia).	Moderate to severe yellow or purple nutsedge infestation. Moderate to severe soilborne disease infestation. Moderate to severe nematode infestation.
	(b) Northeastern Forest and Conservation Nursery Association (Government-owned seedling nurseries in Illinois, Indiana, Kentucky, Maryland, Missouri, New Jersey, Ohio, Pennsylvania, West Virginia, and Wisconsin).	Moderate to severe weed infestation including purple and yellow nutsedge infestation. Moderate to severe Canada thistle infestation. Moderate to severe nematode infestation. Moderate to severe soilborne disease infestation.

Approved critical uses Column A	Approved critical user and location of use Column B	Limiting critical conditions that exist, or that the approved critical user reasonably expects could arise without methyl bromide fumigation Column C
	(c) Michigan Seedling Growers	Moderate to severe soilborne disease infestation. Moderate to severe Canada thistle infestation. Moderate to severe nutsedge infestation. Moderate to severe nematode infestation.
Nursery Stock (Fruit, Nut, Flower).	(a) Members of the California Association of Nursery and Garden Centers representing Deciduous Tree Fruit Growers.	Moderate to severe nematode infestation. Medium to heavy clay soils. Local township limits prohibiting 1,3-dichloropropene.
	(b) California rose nurseries	Moderate to severe nematode infestation. Local township limits prohibiting 1,3-dichloropropene.
Orchard Replant	California stone fruit, table and raisin grape, wine grape, walnut, and almond growers.	Moderate to severe nematode infestation. Moderate to severe soilborne disease infestation. Replanted orchard soils to prevent orchard replant disease. Medium to heavy soils. Local township limits prohibiting 1,3-dichloropropene.
Ornamentals	(a) California growers	Moderate to severe soilborne disease infestation. Moderate to severe nematode infestation. Local township limits prohibiting 1,3-dichloropropene.
	(b) Florida growers	Moderate to severe weed infestation. Moderate to severe soilborne disease infestation. Moderate to severe nematode infestation. Restrictions on alternatives due to karst topographical features and soils not supporting seepage irrigation.
Peppers	(a) Alabama, Arkansas, Kentucky, Louisiana, Mississippi, North Carolina, South Carolina, Tennessee, and Virginia growers.	Moderate to severe yellow or purple nutsedge infestation. Moderate to severe nematode infestation. Moderate to severe pythium root, collar, crown and root rots.
	(b) Florida growers	Moderate to severe yellow or purple nutsedge infestation. Moderate to severe soilborne disease infestation. Moderate to severe nematode infestation. Restrictions on alternatives due to karst topographical features and soils not supporting seepage irrigation.
	(c) Georgia growers	Moderate to severe yellow or purple nutsedge infestation. Moderate to severe nematode infestation, or moderate to severe pythium root and collar rots. Moderate to severe southern blight infestation, crown or root rot. Restrictions on alternatives due to karst topographical features.
Strawberry Fruit	(a) California growers	Moderate to severe black root rot or crown rot. Moderate to severe yellow or purple nutsedge infestation. Moderate to severe nematode infestation. Local township limits prohibiting 1,3-dichloropropene. Time to transition to an alternative.
	(b) Florida growers	Moderate to severe yellow or purple nutsedge infestation. Moderate to severe nematode infestation. Moderate to severe soilborne disease infestation. Carolina geranium or cut-leaf evening primrose infestation. Restrictions on alternatives due to karst topographical features and soils not supporting seepage irrigation.
	(c) Alabama, Arkansas, Georgia, Illinois, Kentucky, Louisiana, Maryland, Mississippi, Missouri, New Jersey, North Carolina, Ohio, South Carolina, Tennessee, and Virginia growers.	Moderate to severe yellow or purple nutsedge infestation. Moderate to severe nematode infestation. Moderate to severe black root and crown rot.

Approved critical uses Column A	Approved critical user and location of use Column B	Limiting critical conditions that exist, or that the approved critical user reasonably expects could arise without methyl bromide fumigation Column C
Strawberry Nurseries	California growers	Moderate to severe soilborne disease infestation. Moderate to severe yellow or purple nutsedge infestation. Moderate to severe nematode infestation.
Sweet Potato Slips	California growers	Local township limits prohibiting 1,3-dichloropropene.
Tomatoes	(a) Alabama, Arkansas, Florida, Georgia, Kentucky, Louisiana, Mississippi, North Carolina, South Carolina, Tennessee, and Virginia growers.	Moderate to severe yellow or purple nutsedge infestation. Moderate to severe soilborne disease infestation. Moderate to severe nematode infestation. Restrictions on alternatives due to karst topographical features and, in Florida, soils not supporting seepage irrigation.
	(b) Maryland growers	Moderate to severe fungal pathogen infestation.
POST–HARVEST USES		
Food Processing	(a) Rice millers in the U.S. who are members of the USA Rice Millers Association.	Moderate to severe beetle, weevil, or moth infestation. Presence of sensitive electronic equipment subject to corrosion. Time to transition to an alternative.
	(b) Pet food manufacturing facilities in the U.S. who are members of the Pet Food Institute.	Moderate to severe beetle, moth, or cockroach infestation. Presence of sensitive electronic equipment subject to corrosion. Time to transition to an alternative.
	(c) Members of the North American Millers' Association in the U.S.	Moderate to severe beetle infestation. Presence of sensitive electronic equipment subject to corrosion. Time to transition to an alternative.
	(d) Members of the National Pest Management Association treating cheese storage facilities.	Mite infestation.
Commodities	California entities storing walnuts, dried plums, figs, raisins, and dates (in Riverside county only) in California.	Rapid fumigation required to meet a critical market window, such as during the holiday season.
Dry Cured Pork Products	Members of the National Country Ham Association and the Association of Meat Processors, Nahunta Pork Center (North Carolina), and Gwaltney and Smithfield Inc.	Red legged ham beetle infestation. Cheese/ham skipper infestation. Dermested beetle infestation. Ham mite infestation.

[77 FR 29229, May 17, 2012]

Subpart B—Servicing of Motor Vehicle Air Conditioners

SOURCE: 57 FR 31261, July 14, 1992, unless otherwise noted.

§ 82.30 Purpose and scope.

(a) The purpose of the regulations in this subpart B is to implement section 609 of the Clean Air Act, as amended (Act) regarding the servicing of motor vehicle air conditioners (MVACs), and to implement section 608 of the Act regarding certain servicing, maintenance, repair and disposal of air conditioners in MVACs and MVAC-like appliances (as that term is defined in 40 CFR 82.152).

(b) These regulations apply to any person performing service on a motor vehicle for consideration when this service involves the refrigerant in the motor vehicle air conditioner.

[57 FR 31261, July 14, 1992, as amended at 62 FR 68046, Dec. 30, 1997]

§ 82.32 Definitions.

(a) *Approved independent standards testing organization* means any organization which has applied for and received approval from the Administrator pursuant to § 82.38.

(b) *Approved refrigerant recycling equipment* means equipment certified by the Administrator or an organization approved under § 82.38 as meeting

either one of the standards in § 82.36. Such equipment extracts and recycles refrigerant or extracts refrigerant for recycling on-site or reclamation off-site.

(c) *Motor vehicle* as used in this subpart means any vehicle which is self-propelled and designed for transporting persons or property on a street or highway, including but not limited to passenger cars, light duty vehicles, and heavy duty vehicles. This definition does not include a vehicle where final assembly of the vehicle has not been completed by the original equipment manufacturer.

(d) *Motor vehicle air conditioners* means mechanical vapor compression refrigeration equipment used to cool the driver's or passenger's compartment of any motor vehicle. This definition is not intended to encompass the hermetically sealed refrigeration systems used on motor vehicles for refrigerated cargo and the air conditioning systems on passenger buses using HCFC-22 refrigerant.

(e) *Properly using.* (1) Properly using means using equipment in conformity with the regulations set forth in this subpart, including but not limited to the prohibitions and required practices set forth in § 82.34, and the recommended service procedures and practices for the containment of refrigerant set forth in appendices A, B, C, D, E, and F of this subpart, as applicable. In addition, this term includes operating the equipment in accordance with the manufacturer's guide to operation and maintenance and using the equipment only for the controlled substance for which the machine is designed. For equipment that extracts and recycles refrigerant, properly using also means to recycle refrigerant before it is returned to a motor vehicle air conditioner or MVAC-like appliance, including to the motor vehicle air conditioner or MVAC-like appliance from which the refrigerant was extracted. For equipment that only recovers refrigerant, properly using includes the requirement to recycle the refrigerant on-site or send the refrigerant off-site for reclamation.

(2) Refrigerant from reclamation facilities that is used for the purpose of recharging motor vehicle air conditioners must be at or above the standard of purity developed by the Air-conditioning and Refrigeration Institute (ARI 700–93) (which is codified at 40 CFR part 82, subpart F, appendix A, and is available at 4301 North Fairfax Drive, Suite 425, Arlington, Virginia 22203). Refrigerant may be recycled off-site only if the refrigerant is extracted using recover only equipment, and is subsequently recycled off-site by equipment owned by the person that owns both the recover only equipment and owns or operates the establishment at which the refrigerant was extracted. In any event, approved equipment must be used to extract refrigerant prior to performing any service during which discharge of refrigerant from the motor vehicle air conditioner can reasonably be expected. Intentionally venting or disposing of refrigerant to the atmosphere is an improper use of equipment.

(3) Notwithstanding any other terms of this paragraph (e), approved refrigerant recycling equipment may be transported off-site and used to perform service involving refrigerant at other locations where such servicing occurs. Any such servicing involving refrigerant must meet all of the requirements of this subpart B that would apply if the servicing occurred on-site.

(4) Facilities that charge MVACs or MVAC-like appliances with refrigerant but do not perform any other service involving refrigerant (*i.e.,* perform ''top-offs'' only) are considered to be engaged in ''service involving refrigerant'' and are therefore subject to any and all requirements of this subsection that apply to facilities that perform a wider range of refrigerant servicing. For facilities that charge MVACs, this includes the requirement to purchase approved refrigerant recycling equipment. For facilities that only charge MVAC-like appliances, this does not include the requirement to purchase approved refrigerant recycling equipment, but does include the requirement to be properly trained and certified by a technician certification program approved by the Administrator pursuant to either § 82.40 or § 82.161(a)(5).

(5) All persons opening (as that term is defined in § 82.152) MVAC-like appliances must have at least one piece of

approved recovery or recycling equipment available at their place of business.

(f) *Refrigerant* means any class I or class II substance used in a motor vehicle air conditioner. Class I and class II substances are listed in part 82, subpart A, appendix A. Effective November 15, 1995, refrigerant shall also include any substitute substance.

(g) *Service for consideration* means being paid to perform service, whether it is in cash, credit, goods, or services. This includes all service except that done for free.

(h) *Service involving refrigerant* means any service during which discharge or release of refrigerant from the MVAC or MVAC-like appliance to the atmosphere can reasonably be expected to occur. Service involving refrigerant includes any service in which an MVAC or MVAC-like appliance is charged with refrigerant but no other service involving refrigerant is performed (*i.e.*, a ''top-off'').

(i) *Motor vehicle disposal facility* means any commercial facility that engages in the disposal (which includes dismantling, crushing or recycling) of MVACs or MVAC-like appliances, including but not limited to automotive recycling facilities, scrap yards, landfills and salvage yards engaged in such operations. Motor vehicle repair and/or servicing facilities, including collision repair facilities, are not considered motor vehicle disposal facilities.

[57 FR 31261, July 14, 1992, as amended at 60 FR 21687, May 2, 1995; 62 FR 68046, Dec. 30, 1997]

§ 82.34 Prohibitions and required practices.

(a) No person repairing or servicing MVACs for consideration, and no person repairing or servicing MVAC-like appliances, may perform any service involving the refrigerant for such MVAC or MVAC-like appliance:

(1) Without properly using equipment approved pursuant to § 82.36;

(2) Unless any such person repairing or servicing an MVAC has been properly trained and certified by a technician certification program approved by the Administrator pursuant to § 82.40; and

(3) Unless any such person repairing or servicing an MVAC-like appliance has been properly trained and certified by a technician certification program approved by the Administrator pursuant to either § 82.40 or § 82.161(a)(5).

(b) Effective November 15, 1992, no person may sell or distribute, or offer for sale or distribution, any class I or class II substance that is suitable for use as a refrigerant in motor vehicle air-conditioner and that is in a container which contains less than 20 pounds of such refrigerant to any person unless that person is properly trained and certified under § 82.40 or intended the containers for resale only, and so certifies to the seller under § 82.42(b)(3).

(c) No technician training programs may issue certificates unless the program complies with all of the standards in § 82.40(a).

(d) *Motor vehicle disposal facilities.* (1) Any refrigerant that is extracted from an MVAC or an MVAC-like appliance (as that term is defined in § 82.152) bound for disposal and located at a motor vehicle disposal facility may not be subsequently used to charge or recharge an MVAC or MVAC-like appliance, unless, prior to such charging or recharging, the refrigerant is either:

(i) Recovered, and reclaimed in accordance with the regulations promulgated under § 82.32(e)(2) of this subpart B; or

(ii) (A) Recovered using approved refrigerant recycling equipment dedicated for use with MVACs and MVAC-like appliances, either by a technician certified under paragraph (a)(2) of this section, or by an employee, owner, or operator of, or contractor to, the disposal facility; and

(B) Subsequently recycled by the facility that charges or recharges the refrigerant into an MVAC or MVAC-like appliance, properly using approved refrigerant recycling equipment in accordance with any applicable recommended service procedures set forth in the appendices to this subpart B.

(2) Any refrigerant the sale of which is restricted under subpart F that is extracted from an MVAC or an MVAC-like appliance bound for disposal and located at a motor vehicle disposal facility but not subsequently reclaimed

in accordance with the regulations promulgated under subpart F, may be sold prior to its subsequent re-use only to a technician certified under paragraph (a)(2) of this section. Any technician certified under paragraph (a)(2) of this section who obtains such a refrigerant may subsequently re-use such refrigerant only in an MVAC or MVAC-like appliance, and only if it has been reclaimed or properly recycled.

(e) Refrigerant handling equipment manufactured or imported for use during the maintenance, service or repair of MVACs for consideration cannot be introduced into interstate commerce unless meeting the requirements of § 82.36.

[57 FR 31261, July 14, 1992, as amended at 62 FR 68047, Dec. 30, 1997; 72 FR 63494, Nov. 9, 2007]

§ 82.36 Approved refrigerant handling equipment.

(a)(1) Refrigerant recycling equipment must be certified by the Administrator or an independent standards testing organization approved by the Administrator under § 82.38 to meet the following standard:

(2) Equipment that recovers and recycles CFC-12 refrigerant must meet the standards set forth in appendix A of this subpart (Recommended Service Procedure for the Containment of CFC-12, Extraction and Recycle Equipment for Mobile Automotive Air-Conditioning Systems, and Standard of Purity for Use in Mobile Air Conditioning Systems).

(3) Equipment that recovers but does not recycle CFC-12 refrigerant must meet the standards set forth in appendix B of this subpart (Recommended Service Procedure for the Containment of CFC-12 and Extraction Equipment for Mobile Automotive Air-Conditioning Systems).

(4) Effective January 1, 2008, equipment that recovers and recycles HFC–134a refrigerant and equipment that recovers and recycles HFC–134a refrigerant and recharges systems with HFC–134a refrigerant must meet the standards set forth in Appendix C of this subpart based upon J2788—HFC–134a (R–134a) Recovery/Recycling Equipment and Recovery/Recycling/Recharging for Mobile Air-Conditioning Systems.

(5) Effective October 31, 2008, equipment that recovers but does not recycle HFC–134a refrigerant must meet the standards set forth in Appendix D of this subpart based upon J2810—HFC–134a (R–134a) Recovery Equipment Mobile Air-Conditioning Systems.

(6) Equipment that recovers and recycles both CFC-12 and HFC-134a using common circuitry must meet the standards set forth in appendix E of this subpart (Automotive Refrigerant Recycling Equipment Intended for Use with both CFC-12 and HFC-134a, Recommended Service Procedure for the Containment of CFC-12, and Recommended Service Procedure for the Containment of HFC-134a).

(7) Equipment that recovers but does not recycle refrigerants other than HFC-134a and CFC-12 must meet the standards set forth in appendix F of this subpart (Recover-Only Equipment that Extracts a Single, Specific Refrigerant Other Than CFC-12 or HFC-134a).

(b)(1) Refrigerant recycling equipment that has not been certified under paragraph (a) of this section shall be considered approved if it is substantially identical to the applicable equipment certified under paragraph (a) of this section, and:

(i) For equipment that recovers and recycles CFC-12 refrigerant, it was initially purchased before September 4, 1991;

(ii) For equipment that recovers but does not recycle CFC-12 refrigerant, it was initially purchased before April 22, 1992;

(iii) For equipment that recovers and recycles HFC-134a refrigerant, it was initially purchased before March 6, 1996;

(iv) For equipment that recovers but does not recycle HFC-134a refrigerant, it was initially purchased before March 6, 1996;

(v) For equipment that recovers but does not recycle any single, specific refrigerant other than CFC-12 or HFC-134a, it was initially purchased before March 6, 1996; and

(vi) For equipment that recovers and recycles HFC-134a and CFC-12 refrigerant using common circuitry, it was

initially purchased before March 6, 1996.

(2) Equipment manufacturers or owners may request a determination by the Administrator by submitting an application and supporting documents that indicate that the equipment is substantially identical to approved equipment to: MVACs Recycling Program Manager, Stratospheric Protection Division (6205J), U.S. Environmental Protection Agency, 1200 Pennsylvania Ave., NW., Washington, DC 20460, Attn: Substantially Identical Equipment Review. Supporting documents must include process flow sheets, lists of components and any other information that would indicate that the equipment is capable of processing the refrigerant to the standards in appendix A, B, C, D, E or F of this subpart, as applicable. Authorized representatives of the Administrator may inspect equipment for which approval is being sought and request samples of refrigerant that has been extracted and/or recycled using the equipment. Equipment that fails to meet appropriate standards will not be considered approved.

(3) Refrigerant recycling equipment that recovers or recovers and recycles CFC-12 refrigerant and has not been certified under paragraph (a) or approved under paragraphs(b)(1) and (b)(2) of this section shall be considered approved for use with an MVAC-like appliance if it was manufactured or imported before November 15, 1993, and is capable of reducing the system pressure to 102 mm of mercury vacuum under the conditions set forth in appendix A of this subpart.

(c) The Administrator will maintain a list of approved equipment by manufacturer and model. Persons interested in obtaining a copy of the list should send written inquiries to the address in paragraph (b) of this section.

[57 FR 31261, July 14, 1992, as amended at 60 FR 21687, May 2, 1995; 62 FR 68047, Dec. 30, 1997; 72 FR 63494, Nov. 9, 2007; 73 FR 34647, June 18, 2008]

§ 82.38 Approved independent standards testing organizations.

(a) Any independent standards testing organization may apply for approval by the Administrator to certify equipment as meeting the standards in appendix A, B, C, D, E, or F of this subpart, as applicable. The application shall be sent to: MVACs Recycling Program Manager, Stratospheric Protection Division (6205J), U.S. Environmental Protection Agency, 1200 Pennsylvania Ave., NW., Washington, DC 20460.

(b) Applications for approval must document the following:

(1) That the organization has the capacity to accurately test whether refrigerant recycling equipment complies with the applicable standards. In particular, applications must document:

(i) The equipment present at the organization that will be used for equipment testing;

(ii) The expertise in equipment testing and the technical experience of the organization's personnel;

(iii) Thorough knowledge of the standards as they appear in the applicable appendices of this subpart; and

(iv) The test procedures to be used to test equipment for compliance with applicable standards, and why such test procedures are appropriate for that purpose.

(2) That the organization has no conflict of interest and will receive no financial benefit based on the outcome of certification testing; and

(3) That the organization agrees to allow the Administrator access to verify the information contained in the application.

(c) If approval is denied under this section, the Administrator shall give written notice to the organization setting forth the basis for his or her determination.

(d) If at any time an approved independent standards testing organization is found to be conducting certification tests for the purposes of this subpart in a manner not consistent with the representations made in its application for approval under this section, the Administrator reserves the right to revoke approval.

[57 FR 31261, July 14, 1992, as amended at 60 FR 21687, May 2, 1995; 62 FR 68048, Dec. 30, 1997]

§ 82.40 Technician training and certification.

(a) Any technician training and certification program may apply for approval, in accordance with the provisions of this paragraph, by submitting to the Administrator at the address in § 82.38(a) verification that the program meets all of the following standards:

(1) *Training*. Each program must provide adequate training, through one or more of the following means: on-the-job training, training through self-study of instructional material, or on-site training involving instructors, videos or a hands-on demonstration.

(2) *Test subject material*. The certification tests must adequately and sufficiently cover the following:

(i) The standards established for the service and repair of MVACs and MVAC-like appliances as set forth in appendices A, B, C, D, E, and F of this subpart. These standards relate to the recommended service procedures for the containment of refrigerant, extraction equipment, extraction and recycle equipment, and the standard of purity for refrigerant in motor vehicle air conditioners.

(ii) Anticipated future technological developments, such as the introduction of HFC-134a in new motor vehicle air conditioners.

(iii) The environmental consequences of refrigerant release and the adverse effects of stratospheric ozone layer depletion.

(iv) As of August 13, 1992, the requirements imposed by the Administrator under section 609 of the Act.

(3) *Test administration*. Completed tests must be graded by an entity or individual who receives no benefit based on the outcome of testing; a fee may be charged for grading. Sufficient measures must be taken at the test site to ensure that tests are completed honestly by each technician. Each test must provide a means of verifying the identification of the individual taking the test. Programs are encouraged to make provisions for non-English speaking technicians by providing tests in other languages or allowing the use of a translator when taking the test. If a translator is used, the certificate received must indicate that translator assistance was required.

(4) *Proof of certification*. Each certification program must offer individual proof of certification, such as a certificate, wallet-sized card, or display card, upon successful completion of the test. Each certification program must provide a unique number for each certified technician.

(b) In deciding whether to approve an application, the Administrator will consider the extent to which the applicant has documented that its program meets the standards set forth in this section. The Administrator reserves the right to consider other factors deemed relevant to ensure the effectiveness of certification programs. The Administrator may approve a program which meets all of the standards in paragraph (a) of this section except test administration if the program, when viewed as a whole, is at least as effective as a program that does meet all the standards. Such approval shall be limited to training and certification conducted before August 13, 1992. If approval is denied under this section, the Administrator shall give written notice to the program setting forth the basis for his determination.

(c) *Technical revisions*. Directors of approved certification programs must conduct periodic reviews of test subject material and update the material based upon the latest technological developments in motor vehicle air conditioner service and repair. A written summary of the review and any changes made must be submitted to the Administrator every two years.

(d) *Recertification*. The Administrator reserves the right to specify the need for technician recertification at some future date, if necessary.

(e) If at any time an approved program is conducted in a manner not consistent with the representations made in the application for approval of the program under this section, the Administrator reserves the right to revoke approval.

(f) Authorized representatives of the Administrator may require technicians to demonstrate on the business entity's premises their ability to perform proper procedures for recovering and/or recycling refrigerant. Failure to demonstrate or failure to properly use the equipment may result in revocation of

the technician's certificate by the Administrator. Technicians whose certification is revoked must be recertified before servicing or repairing any motor vehicle air conditioners.

[57 FR 31261, July 14, 1992, as amended at 60 FR 21688, May 2, 1995; 62 FR 68048, Dec. 30, 1997]

§ 82.42 Certification, recordkeeping and public notification requirements.

(a) *Certification requirements.* (1) No later than January 1, 1993, any person repairing or servicing motor vehicle air conditioners for consideration shall certify to the Administrator that such person has acquired, and is properly using, approved equipment and that each individual authorized to use the equipment is properly trained and certified. Certification shall take the form of a statement signed by the owner of the equipment or another responsible officer and setting forth:

(i) The name of the purchaser of the equipment;

(ii) The address of the establishment where the equipment will be located; and

(iii) The manufacturer name and equipment model number, the date of manufacture, and the serial number of the equipment. The certification must also include a statement that the equipment will be properly used in servicing motor vehicle air conditioners, that each individual authorized by the purchaser to perform service is properly trained and certified in accordance with § 82.40, and that the information given is true and correct.

(A) Owners or lessees of recycling or recovery equipment having their places of business in Connecticut, Maine, Massachusetts, New Hampshire, Rhode Island, Vermont must send their certifications to: CAA section 609 Enforcement Contact; EPA Region I; Mail Code OES04–5; 5 Post Office Square—Suite 100, Boston, MA 02109–3912.

(B) Owners or lessees of recycling or recovery equipment having their places of business in New York, New Jersey, Puerto Rico, Virgin Islands must send their certifications to: CAA section 609 Enforcement Contact; EPA Region II (2DECA–AC); 290 Broadway, 21st Floor; New York, NY 10007–1866.

(C) Owners or lessees of recycling or recovery equipment having their places of business in Delaware, District of Columbia, Maryland, Pennsylvania, Virginia, West Virginia must send their certifications to: CAA section 609 Enforcement Contact; EPA Region III—Wheeling Operations Office; Mail Code 3AP12; 303 Methodist Building; 11th and Chapline Streets; Wheeling, WV 26003.

(D) Owners or lessees of recycling or recovery equipment having their places of business in Alabama, Florida, Georgia, Kentucky, Mississippi, North Carolina, South Carolina, Tennessee must send their certifications to: CAA section 609 Enforcement Contact; EPA Region IV (APT–AE); Atlanta Federal Center; 61 Forsyth Street, SW.; Atlanta, GA 30303.

(E) Owners or lessees of recycling or recovery equipment having their places of business in Illinois, Indiana, Michigan, Minnesota, Ohio, Wisconsin must send their certifications to: CAA section 609 Enforcement Contact, EPA Region V (AE17J); 77 West Jackson Blvd.; Chicago, IL 60604–3507.

(F) Owners or lessees of recycling or recovery equipment having their places of business in Arkansas, Louisiana, New Mexico, Oklahoma, Texas must send their certifications to: CAA section 609 Enforcement Contact; EPA Region VI (6EN–AA); 1445 Ross Avenue, Suite 1200; Dallas, Texas 75202.

(G) Owners or lessees of recycling or recovery equipment having their places of business in Iowa, Kansas, Missouri, Nebraska must send their certifications to: CAA section 609 Enforcement Contact; EPA Region VII; Mail Code APCO/ARTD; 901 North 5th Street; Kansas City, KS 66101.

(H) Owners or lessees of recycling or recovery equipment having their places of business in Colorado, Montana, North Dakota, South Dakota, Utah, Wyoming must send their certifications to: CAA section 609 Enforcement Contact, EPA Region VIII, Mail Code 8ENF–T, 999 18th Street, Suite 500, Denver, CO 80202–2466.

(I) Owners or lessees of recycling or recovery equipment having their places of business in American Samoa, Arizona, California, Guam, Hawaii, Nevada must send their certifications to: CAA section 609 Enforcement Contact;

EPA Region IX; Mail Code AIR–5; 75 Hawthorne Street; San Francisco, CA 94105.

(J) Owners or lessees of recycling or recovery equipment having their places of business in Alaska, Idaho, Oregon, Washington must send their certifications to: CAA section 609 Enforcement Contact; EPA Region X (OAQ–107); 1200 Sixth Avenue; Seattle, WA 98101.

(b) *Recordkeeping requirements.* (1) Any person who owns approved refrigerant recycling equipment certified under § 82.36(a)(2) must maintain records of the name and address of any facility to which refrigerant is sent.

(2) Any person who owns approved refrigerant recycling equipment must retain records demonstrating that all persons authorized to operate the equipment are currently certified under § 82.40.

(3) Any person who sells or distributes any class I or class II substance that is suitable for use as a refrigerant in a motor vehicle air conditioner and that is in a container of less than 20 pounds of such refrigerant must verify that the purchaser is properly trained and certified under § 82.40. The seller must have a reasonable basis for believing that the information presented by the purchaser is accurate. The only exception to these requirements is if the purchaser is purchasing the small containers for resale only. In this case, the seller must obtain a written statement from the purchaser that the containers are for resale only and indicate the purchasers name and business address. Records required under this paragraph must be retained for a period of three years.

(4) All records required to be maintained pursuant to this section must be kept for a minimum of three years unless otherwise indicated. Entities which service motor vehicle air conditioners for consideration must keep these records on-site.

(5) All entities which service motor vehicle air conditioners for consideration must allow an authorized representative of the Administrator entry onto their premises (upon presentation of his or her credentials) and give the authorized representative access to all records required to be maintained pursuant to this section.

(c) *Public notification.* Any person who conducts any retail sales of a class I or class II substance that is suitable for use as a refrigerant in a motor vehicle air conditioner, and that is in a container of less than 20 pounds of refrigerant, must prominently display a sign where sales of such containers occur which states:

''It is a violation of federal law to sell containers of Class I and Class II refrigerant of less than 20 pounds of such refrigerant to anyone who is not properly trained and certified to operate approved refrigerant recycling equipment.''

[57 FR 31261, July 14, 1992, as amended at 60 FR 21688, May 2, 1995; 72 FR 63494, Nov. 9, 2007; 76 FR 49673, Aug. 11, 2011]

APPENDIX A TO SUBPART B OF PART 82—STANDARD FOR RECYCLE/RECOVER EQUIPMENT

STANDARD OF PURITY FOR USE IN MOBILE AIR-CONDITIONING SYSTEMS

Foreword

Due to the CFC's damaging effect on the ozone layer, recycle of CFC-12 (R–12) used in mobile air-conditioning systems is required to reduce system venting during normal service operations. Establishing recycle specifications for R–12 will assure that system operation with recycled R–12 will provide the same level of performance as new refrigerant.

Extensive field testing with the EPA and the auto industry indicate that reuse of R–12 removed from mobile air-conditioning systems can be considered, if the refrigerant is cleaned to a specific standard. The purpose of this standard is to establish the specific minimum levels of R–12 purity required for recycled R–12 removed from mobile automotive air-conditioning systems.

1. Scope

This information applies to refrigerant used to service automobiles, light trucks, and other vehicles with similar CFC-12 systems. Systems used on mobile vehicles for refrigerated cargo that have hermetically sealed, rigid pipe are not covered in this document.

2. References

SAE J1989, Recommended Service Procedure for the Containment of R–12

SAE J1990, Extraction and Recycle Equipment for Mobile Automotive Air-Conditioning Systems

ARI Standard 700–88

3. Purity Specification

The refrigerant in this document shall have been directly removed from, and intended to be returned to, a mobile air-conditioning system. The contaminants in this recycled refrigerant 12 shall be limited to moisture, refrigerant oil, and noncondensable gases, which shall not exceed the following level:

3.1 *Moisture:* 15 ppm by weight.

3.2 *Refrigerant Oil:* 4000 ppm by weight.

3.3 *Noncondensable Gases (air):* 330 ppm by wright.

4. Refrigeration Recycle Equipment Used in Direct Mobile Air-Conditioning Service Operations Requirement

4.1 The equipment shall meet SAE J1990, which covers additional moisture, acid, and filter requirements.

4.2 The equipment shall have a label indicating that it is certified to meet this document.

5. Purity Specification of Recycled R–12 Refrigerant Supplied in Containers From Other Recycle Sources

Purity specification of recycled R–12 refrigerant supplied in containers from other recycle sources, for service of mobile air-conditioning systems, shall meet ARI Standard 700–88 (Air Conditioning and Refrigeration Institute).

6. Operation of the Recycle Equipment

This shall be done in accordance with SAE J1989.

Rationale

Not applicable.

Relationship of SAE Standard to ISO Standard

Not applicable.

Reference Section

SAE J1989, Recommended Service Procedure for the Containment of R–12

SAE J1990, Extraction and Recycle Equipment for Mobile Automotive Air-Conditioning Systems

ARI Standard 700–88

Application

This information applies to refrigerant used to service automobiles, light trucks, and other vehicles with similar CFC-12 systems. Systems used on mobile vehicles for refrigerated cargo that have hermetically sealed, rigid pipe are not covered in this document.

Committee Composition

DEVELOPED BY THE SAE DEFROST AND INTERIOR CLIMATE CONTROLS STANDARDS COMMITTEE

W.J. Atkinson, Sun Test Engineering, Paradise Valley, AZ—Chairman
J.J. Amin, Union Lake, MI
H.S. Andersson, Saab Scania, Sweden
P.E. Anglin, ITT Higbie Mfg. Co., Rochester, MI
R.W. Bishop, GMC, Lockport, NY
D. Hawks, General Motors Corporation, Pontiac, MI
J.J. Hernandez, NAVISTAR, Ft. Wayne, IN
H. Kaltner, Volkswagen AG, Germany, Federal Republic
D.F. Last, GMC, Troy, MI
D.E. Linn, Volkswagen of America, Warren, MI
J.H. McCorkel, Freightliner Corp., Charlotte, NC
C.J. McLachlan, Livonia, MI
H.L. Miner, Climate Control Inc., Decatur, IL
R.J. Niemiec, General Motors Corp., Pontiac, MI
N. Novak, Chrysler Corp., Detroit, MI
S. Oulouhojian, Mobile Air Conditioning Society, Upper Darby, PA
J. Phillips, Air International, Australia
R.H. Proctor, Murray Corp., Cockeysville, MD
G. Rolling, Behr America Inc., Ft. Worth, TX
C.D. Sweet, Signet Systems Inc., Harrodsburg, KY
J.P. Telesz, General Motors Corp., Lockport, NY

EXTRACTION AND RECYCLE EQUIPMENT FOR MOBILE AUTOMOTIVE AIR CONDITIONING SYSTEMS

SAE Recommended Practice, SAE J1990 (1991)[1]

0. Foreword

Due to the CFC's damaging effect on the ozone layer, recycle of CFC-12 (R–12) used in mobile air-conditioning systems is required to replace system venting during normal service operations. Establishing recycle specifications for R–12 will provide the same level of performance as new refrigerant.

[1] This standard is appropriate for equipment certified after February 1, 1992. This equipment may be marked design certified for compliance with SAE J1990 (1991). The standard for approval for equipment certified on or before February 1, 1992 is SAE J1990 (1989). This equipment may be marked design certified for compliance with SAE J1990 (1989). Both types of equipment are considered approved under the requirements of this regulation.

Extensive field testing with the EPA and the auto industry indicates that R–12 can be reused, provided that it is cleaned to specifications in SAE J1991. The purpose of this document is to establish the specific minimum equipment specification required for recycle of R–12 that has been directly removed from mobile systems for reuse in mobile automotive air-conditioning systems.

1. Scope

The purpose of this document is to provide equipment specifications for CFC-12 (R–12) recycling equipment. This information applies to equipment used to service automobiles, light trucks, and other vehicles with similar CFC-12 air-conditioning systems. Systems used on mobile vehicles for refrigerated cargo that have hermetically sealed systems are not covered in this document. The equipment in this document is intended for use with refrigerant that has been directly removed from, and intended to be returned to, a mobile air-conditioning system. Should other revisions due to operational or technical requirements occur, this document may be amended.

2. References

2.1 Applicable Documents:

2.1.1 SAE Publications—Available from SAE, 400 Commonwealth Drive, Warrendale, PA 15096–0001.

SAE J1991—Standard of Purity for Use in Mobile Air-Conditioning Systems

SAE J2196—Service Hose for Automotive Air-Conditioning

2.1.2 CGA Publications—Available from CGA, Crystal Gateway #1, Ste. 501, 1235 Jefferson Davis Hwy., Arlington, VA 22202

CGA Pamphlet S–1.1—Pressure Relief Device Standard Part 1—Cylinders for Compressed Gases

3. Specification and General Description

3.1 The equipment must be able to extract and process CFC-12 from mobile air-conditioning systems. The equipment shall process the contaminated R–12 samples as defined in 8.4 and shall clean the refrigerant to the level as defined in SAE J1991.

3.2 The equipment shall be suitable for use in an automotive service environment and be capable of continuous operation in ambients from 10 to 49 °C.

3.3 The equipment must be certified by Underwriters Laboratories or an equivalent certifying laboratory.

3.4 The equipment shall have a label ''Design Certified by (Company Name) to Meet SAE J1991''. The minimum letter size shall be bold type 3 mm in height.

4. Refrigeration Recycle Equipment Requirements

4.1 Moisture and Acid—The equipment shall incorporate a desiccant package that must be replaced before saturated with moisture and whose mineral acid capacity is at least 5% by weight of total system dry desiccant.

4.1.1 The equipment shall be provided with a moisture detection device that will reliably indicate when moisture in the CFC-12 exceeds the allowable level and requires the filter/dryer replacement.

4.2 Filter—The equipment shall incorporate an in-line filter that will trap particulates of 15 μm or greater.

4.3 Noncondensable Gas.

4.3.1 The equipment shall either automatically purge noncondensables (NCGs) if the acceptable level is exceeded or incorporate a device to alert the operator that NCG level has been exceeded. NCG removal must be part of normal operation of the equipment and instructions must be provided to enable the task to be accomplished within 30 minutes.

4.3.2 Refrigerant loss from noncondensable gas purging during testing described in Section 8 shall not exceed five percent (5%) by weight of the total contaminated refrigerant removed from the test system.

4.3.3 Transfer of Recycled Refrigerant—Recycled refrigerant for recharging and transfer shall be taken from the liquid phase only.

5. Safety Requirements

5.1 The equipment must comply with applicable federal, state and local requirements on equipment related to the handling of R–12 material. Safety precautions or notices related to the safe operation of the equipment shall be prominently displayed on the equipment and should also state ''Caution—Should Be Operated By Qualified Personnel''.

6. Operating Instructions

6.1 The equipment manufacturer must provide operating instructions, necessary maintenance procedures, and source information for replacement parts and repair.

6.2 The equipment must prominently display the manufacturer's name, address and any items that require maintenance or replacement that affect the proper operation of the equipment. Operation manuals must cover information for complete maintenance of the equipment to assure proper operation.

7. Functional Description

7.1 The equipment must be capable of ensuring recovery of the R–12 from the system being service, by reducing the system pressure below atmospheric to a minimum of 102 mm of mercury.

7.2 To prevent overcharge, the equipment must be equipped to protect the tank used to store the recycled refrigerant with a shutoff device and a mechanical pressure relief valve.

7.3 Portable refillable tanks or containers used in conjunction with this equipment must meet applicable Department of Transportation (DOT) or Underwriters Laboratories (UL) Standards and be adaptable to existing refrigerant service and charging equipment.

7.4 During operation, the equipment shall provide overfill protection to assure the storage container, internal or external, liquid fill does not exceed 80% of the tank's rated volume at 21.1 °C (70 °F) per DOT standards, CFR title 49, §173.304 and American Society of Mechanical Engineers.

7.4.1 Additional Storage Tank Requirements.

7.4.1.1 The cylinder valve shall comply with the standard for cylinder valves, UL 1769.

7.4.1.2 The pressure relief device shall comply with the Pressure Relief Device Standard Part 1—Cylinders for Compressed Gases, CGA Pamphlet S–1.1.

7.4.1.3 The tank assembly shall be marked to indicate the first retest date, which shall be 5 years after date of manufacture. The marking shall indicate that retest must be performed every subsequent 5 years. The marking shall be in letters at least ¼ in high.

7.5 All flexible hoses must meet SAE J2196 hose specification effective January 1, 1992.

7.6 Service hoses must have shutoff devices located within 30 cm (12 in) of the connection point to the system being serviced to minimize introduction of noncondensable gases into the recovery equipment and the release of the refrigerant when being disconnected.

7.7 The equipment must be able to separate the lubricant from the recovered refrigerant and accurately indicate the amount removed during the process, in 30 ml units. Refrigerant dissolves in lubricant sample. This creates the illusion that more lubricant has been recovered than actually has been. The equipment lubricant measuring system must take in account such dissolved refrigerant to prevent overcharging the vehicle system with lubricant. Note: Use only new lubricant to replace the amount removed during the recycle process. Used lubricant should be discarded per applicable federal, state, and local requirements.

7.8 The equipment must be capable of continuous operation in ambient of 10 to 49 °C (50 to 120 °F).

7.9 The equipment should be compatible with leak detection material that may be present in the mobile AC system.

8. Testing

This test procedure and the requirement are used for evaluation of the equipment for its ability to clean the contaminated R–12 refrigerant.

8.1 The equipment shall clean the contaminated R–12 refrigerant to the minimum purity level as defined in SAE J1991, when tested in accordance with the following conditions:

8.2 For test validation, the equipment is to be operated according to the manufacturer's instructions.

8.3 The equipment must be preconditioned with 13.6 kg (30 lb) of the standard contaminated R–12 at an ambient of 21 °C (70 °F) before starting the test cycle. Sample amounts are not to exceed 1.13 kg (2.5 lb) with sample amounts to be repeated every 5 min. The sample method fixture, defined in Fig. 1, shall be operated at 24 °C (75 °F).

8.4 Contaminated R–12 Samples.

8.4.1 Standard contaminated R–12 refrigerant shall consist of liquid R–12 with 100 ppm (by weight) moisture at 21 °C (70 °F) and 45,000 ppm (by weight) mineral oil 525 suspension nominal and 770 ppm by weight of noncondensable gases (air).

8.4.2 High moisture contaminated sample shall consist of R–12 vapor with 1,000 ppm (by weight) moisture.

8.4.3 High oil contaminated sample shall consist of R–12 with 200,000 ppm (by weight) mineral oil 525 suspension viscosity nominal.

8.5 Test Cycle.

8.5.1 After preconditioning as stated in 8.3, the test cycle is started, processing the following contaminated samples through the equipment:

8.5.1.1 3013.6 kg (30 lb) of standard contaminated R–12.

8.5.1.2 1 kg (2.2 lb) of high oil contaminated R–12.

8.5.1.3 4.5 kg (10 lb) of standard contaminated R–12.

8.5.1.4 1 kg (2.2 lb) of high moisture contaminated R–12.

8.6 Equipment Operating Ambient.

8.6.1 The R–12 is to be cleaned to the minimum purity level, as defined in SAE J1991, with the equipment operating in a stable ambient of 10, 21, and 49 °C (50, 70, and 120 °F) and processing the samples as defined in 8.5.

8.7 Sample Analysis.

8.7.1 The processed contaminated sample shall be analyzed according to the following procedure.

8.8 Quantitative Determination of Moisture.

8.8.1 The recycled liquid phase sample of CFC-12 shall be analyzed for moisture content via Karl Fischer coulometer titration or an equivalent method. The Karl Fischer apparatus is an instrument for precise determination of small amounts of water dissolved in liquid and/or gas samples.

8.8.2 In conducting the test, a weighed sample of 30 to 130 grams is vaporized directly into the Karl Fischer analyte. A coulometer titration is conducted and the results are calculated and displayed as parts per million moisture (weight).

8.9 Determination of Percent Lubricant.

8.9.1 The amount of oil in the recycled sample of CFC-12 is to be determined by gravimetric analysis.

8.9.2 Following venting of noncondensable, in accordance with the manufacturer's operating instructions, the refrigerant container shall be shaken for 5 minutes prior to extracting samples for test.

8.9.3 A weighted sample of 175 to 225 grams of liquid CFC-12 is allowed to evaporate at room temperature. The percent oil is to be calculated from the weight of the original sample and the residue remaining after the evaporation.

8.10 Noncondensable Gas.

8.10.1 The amount of noncondensable gas is to be determined by gas chromatography. A sample of vaporized refrigerant liquid shall be separated and analyzed by gas chromatography. A Porapak Q column at 130 °C and a hot wire detector may be used for analysis.

8.10.2 This test shall be conducted on recycled refrigerant (taken from the liquid phase) within 30 minutes after the proper venting of noncondensable.

8.10.3 Samples shall be shaken for 8 hours prior to retesting while at a temperature of 24 ±2.8 °C (75 ±5 °F). Known volumes of refrigerant vapor are to be injected for separation and analysis by means of gas chromatography. A Porapak Q column at 130 °C (266 °F) and a hot wire detector are to be used for the analysis.

8.10.4 This test shall be conducted at 21 and 49 °C and may be performed in conjunction with the testing defined in Section 8.6. The equipment shall process at least 13.6 kg of standard contaminated refrigerant for this test.

8.11 Sample Requirements.

8.11.1 The sample shall be tested as defined in 8.7, 8.8, 8.9, and 8.10 at ambient temperatures of 10, 21, and 49 °C (50, 70, and 120 °F) as defined in 8.6.1.

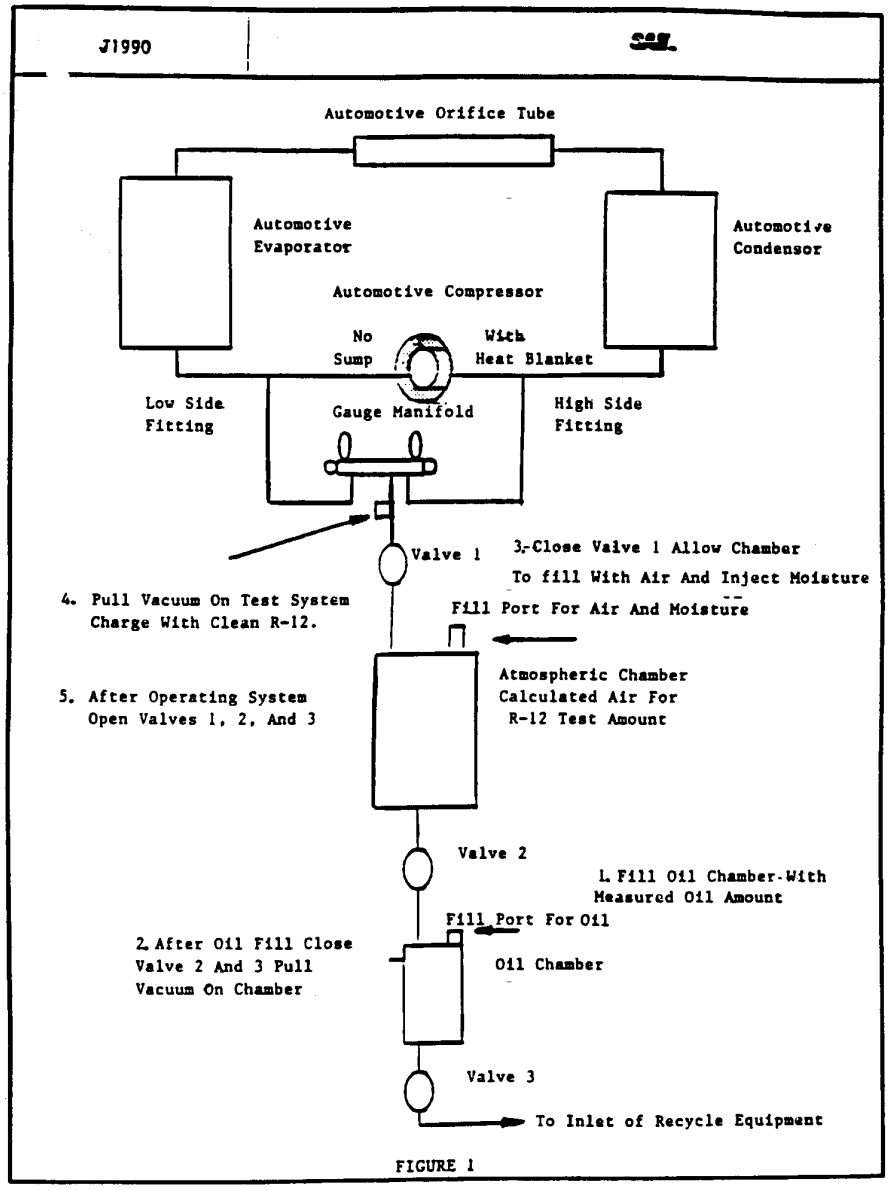

FIGURE 1

RECOMMENDED SERVICE PROCEDURE FOR THE CONTAINMENT OF R–12

1. Scope

During service of mobile air-conditioning systems, containment of the refrigerant is important. This procedure provides service guidelines for technicians when repairing vehicles and operating equipment defined in SAE J1990.

2. References

SAE J1990, Extraction and Recycle Equipment for Mobile Automotive Air-Conditioning Systems

3. Refrigerant Recovery Procedure

3. 1 Connect the recovery unit service hoses, which shall have shutoff valves within 12 in (30 cm) of the service ends, to the vehicle air-conditioning system service ports.

3.2 Operate the recovery equipment as covered by the equipment manufacturers recommended procedure.

3.2.1 Start the recovery process and remove the refrigerant from the vehicle AC system. Operate the recovery unit until the vehicle system has been reduced from a pressure to a vacuum. With the recovery unit shut off for at least 5 min, determine that there is no refrigerant remaining in the vehicle AC system. If the vehicle system has pressure, additional recovery operation is required to remove the remaining refrigerant. Repeat the operation until the vehicle AC system vacuum level remains stable for 2 min.

3.3 Close the valves in the service lines and then remove the service lines from the vehicle system. Proceed with the repair/service. If the recovery equipment has automatic closing valves, be sure they are properly operating.

4. Service With Manifold Gage Set

4.1 Service hoses must have shutoff valves in the high, low, and center service hoses within 12 in (30 cm) of the service ends. Valves must be closed prior to hose removal from the air-conditioning system. This will reduce the volume of refrigerant contained in the service hose that would otherwise be vented to atmosphere.

4.2 During all service operations, the valves should be closed until connected to the vehicle air-conditioning system or the charging source to avoid introduction of air and to contain the refrigerant rather than vent open to atmosphere.

4.3 When the manifold gage set is disconnected from the air-conditioning system or when the center hose is moved to another device which cannot accept refrigerant pressure, the gage set hoses should first be attached to the reclaim equipment to recover the refrigerant from the hoses.

5. Recycled Refrigerant Checking Procedure for Stored Portable Auxiliary Container

5.1 To determine if the recycled refrigerant container has excess noncondensable gases (air), the container must be stored at a temperature of 65 °F (18.3 °C) or above for a period of time, 12 h, protected from direct sun.

5.2 Install a calibrated pressure gage, with 1 psig divisions (0.07 kg), to the container and determine the container pressure.

5.3 With a calibrated thermometer, measure the air temperature within 4 in (10 cm) of the container surface.

5.4 Compare the observed container pressure and air temperature to determine if the container exceeds the pressure limits found on Table 1, e.g., air temperature 70 °F (21 °C) pressure must not exceed 80 psig (5.62 kg/cm^2).

TABLE 1

Temp °F	Psig	Temp °F	Psig	Temp °F	Psig	Temp °F	Psig	Temp °F	Psig
65	74	75	87	85	102	95	118	105	136
66	75	76	88	86	103	96	120	106	138
67	76	77	90	87	105	97	122	107	140
68	78	78	92	88	107	98	124	108	142
69	79	79	94	89	108	99	125	109	144
70	80	80	96	90	110	100	127	110	146
71	82	81	98	91	111	101	129	111	148
72	83	82	99	92	113	102	130	112	150
73	84	83	100	93	115	103	132	113	152
74	86	84	101	94	116	104	134	114	154

TABLE 1 (METRIC)

Temp °C	Pres	Temp °C	Pres	Temp °C	Pres	Temp °C	Pres	Temp °C	PRres
18.3	5.20	23.9	6.11	29.4	7.17	35.0	8.29	40.5	9.56
18.8	5.27	24.4	6.18	30.0	7.24	35.5	8.43	41.1	9.70
19.4	5.34	25.0	6.32	30.5	7.38	36.1	8.57	41.6	9.84
20.0	5.48	25.5	6.46	31.1	7.52	36.6	8.71	42.2	9.98
20.5	5.55	26.1	6.60	31.6	7.59	37.2	8.78	42.7	10.12
21.1	5.62	26.6	6.74	32.2	7.73	37.7	8.92	43.3	10.26
21.6	5.76	27.2	6.88	32.7	7.80	38.3	9.06	43.9	10.40
22.2	5.83	27.7	6.95	33.3	7.94	38.8	9.13	44.4	10.54
22.7	5.90	28.3	7.03	33.9	8.08	39.4	9.27	45.0	10.68
23.3	6.04	28.9	7.10	34.4	8.15	40.0	9.42	45.5	10.82

Pres kg/sq cm.

5.5 If the container pressure is less than the Table 1 values and has been recycled, limits of noncondensable gases (air) have not been exceeded and the refrigerant may be used.

5.6 If the pressure is greater than the range and the container contains recycled material, slowly vent from the top of the container a small amount of vapor into the recycle equipment until the pressure is less than the pressure shown on Table 1.

5.7 If the container still exceeds the pressure shown on Table 1, the entire contents of the container shall be recycled.

6. Containers for Storage of Recycled Refrigerant

6.1 Recycled refrigerant should not be salvaged or stored in disposable refrigerant containers. This is the type of container in which virgin refrigerant is sold. Use only DOT CFR title 49 or UL approved storage containers for recycled refrigerant.

6.2 Any container of recycled refrigerant that has been stored or transferred must be checked prior to use as defined in section 5.

7. Transfer of Recycled Refrigerant

7.1 When external portable containers are used for transfer, the container must be evacuated at least 27 in of vacuum (75 mm Hg absolute pressure) prior to transfer of the recycled refrigerant. External portable containers must meet DOT and UL standards.

7.2 To prevent on-site overfilling when transferring to external containers, the safe filling level must be controlled by weight and must not exceed 60% of container gross weight rating.

8. Disposal of Empty/Near Empty Containers

8.1 Since all the refrigerant may not be removed from disposable refrigerant containers during normal system charging procedures, empty/near empty container contents should be reclaimed prior to disposal of the container.

8.2 Attach the container to the recovery unit and remove the remaining refrigerant. When the container has been reduced from a pressure to a vacuum, the container valve can be closed. The container should be marked empty and is ready for disposal.

Rationale

Not applicable.

Relationship of SAE Standard to ISO Standard.

Not applicable.

Reference Section

SAE J1990, Extraction and Recycle Equipment for Mobile Automotive Air-Conditioning Systems

Application

During service of mobile air-conditioning systems, containment of the refrigerant is important. This procedure provides service guidelines for technicians when repairing vehicles and operating equipment defined in SAE J1990.

Committee Composition

Developed by the SAE Defrost and Interior Climate Control Standards Committee

W.J. Atkinson, Sun Test Engineering, Paradise Valley, AZ—Chairman
J.J. Amin, Union Lake, MI
H.S. Andersson, Saab Scania, Sweden
P.E. Anglin, ITT Higbie Mfg. Co., Rochester, MI
R.W. Bishop, GMC, Lockport, NY
D.Hawks, General Motors Corporation, Pontiac, MI
J.J. Hernandez, NAVISTAR, Ft. Wayne, IN
H. Kaltner, Volkswagen AG, Germany, Federal Republic
D.F. Last, GMC, Troy, MI
D.E. Linn, Volkswagen of America, Warren, MI
J.H. McCorkel, Freightliner Corp., Charlotte, NC
C.J. McLachlan, Livonia, MI
H.L. Miner, Climate Control Inc., Decatur, IL
R.J. Niemiec, General Motors Corp., Pontiac, MI
N. Novak, Chrysler Corp., Detroit, MI
S. Oulouhojian, Mobile Air Conditioning Society, Upper Darby, PA
J. Phillips, Air International, Australia
R.H. Proctor, Murray Corp., Cockeysville, MD
G. Rolling, Behr America Inc., Ft. Worth, TX
C.D. Sweet, Signet Systems Inc., Harrodsburg, KY
J.P. Telesz, General Motors Corp., Lockport, NY

APPENDIX B TO SUBPART B OF PART 82—STANDARD FOR RECOVER EQUIPMENT

SAE J1989, Recommended Service Procedure for the Containment of R–12, as set forth under Appendix A, also applies to this Appendix B.

SAE J2209, issued June, 1992.

SAE RECOMMENDED PRACTICE: CFC-12 (R–12) EXTRACTION EQUIPMENT FOR MOBILE AUTOMOTIVE AIR-CONDITIONING SYSTEMS

Foreword

CFCs deplete the stratospheric ozone layer that protects the earth against harmful ultraviolet radiation. To reduce the emissions

of CFCs, the 1990 Clean Air Act requires recycle of CFC-12 (R–12) used in mobile air-conditioning systems to eliminate system venting during service operations. SAE J1990 establishes equipment specifications for on-site recovery and reuse of CFCs in mobile air-conditioning systems. Establishing extraction equipment specifications for CFC-12 will provide service facilities with equipment to assure that venting of refrigerant will not occur.

1. Scope

The purpose of this document is to provide equipment specifications for CFC-12 (R–12) recovery for recycling on-site or for transport off-site to a refrigerant reclamation facility that will process it to ARI (Air-Conditioning and Refrigeration Institute) standard 700–93 as a minimum. It is not acceptable that the refrigerant removed from a mobile air-conditioning system, with this equipment, be directly returned to a mobile air-conditioning system.

This information applies to equipment used to service automobiles, light trucks, and other vehicles with similar CFC-12 systems.

2. References

2. Applicable Documents—The following documents form a part of this specification to the extent specified herein.

2.1.1 SAE Publications—Available from SAE, 400 Commonwealth Drive, Warrendale, PA 15096–0001.

SAE J639—Vehicle Service Coupling

SAE J1990—Extraction and Recycle Equipment for Mobile Automotive Air-Conditioning Systems

SAE J2196—Service Hose for Automotive Air-Conditioning

2.1.2 ARI Publications—Available from Air-Conditioning and Refrigeration Institute, 1501 Wilson Boulevard, Sixth Floor, Arlington, VA 22209.

ARI 700–93—Specifications for Fluorocarbon Refrigerants

2.1.3 CGA Publications—Available from CGA, Crystal Gateway #1, Suite 501, 1235 Jefferson Davis Highway, Arlington, VA 22202.

CGA S–1.1—Pressure Relief Device Standard Part 1—Cylinders for Compressed Gases

2.1.4 DOT Specifications—Available from the Superintendent of Documents, U.S. Government Printing Office, Washington, DC 20402.

49 CFR, Section 173.304—Shippers—General Requirements for Shipments and Packagings

2.1.5 UL Publications—Available from Underwriters Laboratories, 333 Pfingsten Road, Northbrook, IL 60062–2096.

UL 1769—Cylinder Valves

3. Specifications and General Description

3.1 The equipment must be able to extract CFC-12 from a mobile air-conditioning system.

3.2 The equipment discharge or transfer fitting shall be unique to prevent the unintentional use of extracted CFC-12 to be used for recharging auto air conditioners.

3.3 The equipment shall be suitable for use in an automotive service garage environment as defined in 6.8.

3.4 Equipment Certification—The equipment must be certified by Underwriters Laboratories or an equivalent certifying laboratory to meet this standard.

3.5 Label Requirements—The equipment shall have a label ''Design Certified by (company name) to meet SAE J2209 for use with CFC-12. The refrigerant from this equipment must be processed to ARI 700–93 specifications before reuse in a mobile air-conditioning system.'' The minimum letter size shall be bold type 3mm in height.

4. Safety Requirements

4.1 The equipment must comply with applicable federal, state and local requirements on equipment related to the handling of R–12 material. Safety precautions or notices or labels related to the safe operation of the equipment shall also be prominently displayed on the equipment and should also state ''CAUTION—SHOULD BE OPERATED BY CERTIFIED PERSONNEL.'' The safety identification shall be located on the front near the controls.

4.2 The equipment must comply with applicable safety standards for electrical and mechanical requirements.

5. Operating Instructions

5.1 The equipment manufacturer must provide operating instructions, necessary maintenance procedures and source information for replacement parts and repair.

5.2 The equipment must prominently display the manufacturer's name, address and any items that require maintenance or replacement that affect the proper operation of the equipment. Operation manuals must cover information for complete maintenance of the equipment to assure proper operation.

6. Functional Description

6.1 The equipment must be capable of ensuring recovery of the CFC-12 from the system being serviced, by reducing the system pressure to a minimum of 102 mm of mercury below atmospheric. To prevent system delayed outgassing, the unit must have a device that assures that the refrigerant has been recovered from the air-conditioning system.

6.1.1 Testing laboratory certification of the equipment capability is required which

shall process contaminated refrigerant samples at specific temperatures.

6.2 The equipment must be preconditioned with 13.6 kg of the standard contaminated CFC-12 at an ambient of 21 °C before starting the test cycle. Sample amounts are not to exceed 1.13 kg with sample amounts to be repeated every 5 minutes. The sample method fixture defined in Figure 1 of appendix A shall be operated at 24 °C. Contaminated CFC-12 samples shall be processed at ambient temperatures of 10 and 49 °C.

6.2.1 Contaminated CFC-12 sample.

6.2.2 Standard contaminated CFC-12 refrigerant, 13.6 Kg sample size, shall consist of liquid CFC-12 with 100 ppm (by weight) moisture at 21 °C and 45,000 ppm (by weight) mineral oil 525 suspension nominal and 770 ppm (by weight) of noncondensable gases (air).

6.3 Portable refillable containers used in conjunction with this equipment must meet applicable DOT standards.

6.3.1 The container color must be gray with yellow top to identify that it contains used CFC-12 refrigerant. It must be permanently marked on the outside surface in black print at least 20 mm high ''DIRTY R–12—DO NOT USE, MUST BE REPROCESSED''.

6.3.2 The portable refillable container shall have a SAE 3/8 inch flare male thread connection as identified in SAE J639 CFC-12 High Pressure Charging Valve Figure 2.

6.3.3 During operation the equipment shall provide overfill protection to assure that the storage container liquid fill does not exceed 80% of the tank's rated volume at 21 °C per DOT standard, CFR Title 49, section 173.304 and the American Society of Mechanical Engineers.

6.4 Additional Storage Tank Requirements.

6.4.1 The cylinder valve shall comply with the standard for cylinder valves, UL 1769.

6.4.2 The pressure relief device shall comply with the pressure relief device standard part 1, CGA pamphlet S–1.1.

6.4.3 The container assembly shall be marked to indicate the first retest date, which shall be 5 years after date of manufacture. The marking shall indicate that retest must be performed every subsequent five years. The marking shall be in letters at least 6 mm high.

6.5 All flexible hoses must meet SAE J2196 standard for service hoses.

6.6 Service hoses must have shutoff devices located within 30 cm of the connection point to the system being serviced to minimize introduction of noncondensable gases into the recovery equipment during connection and the release of the refrigerant during disconnection.

6.7 The equipment must be able to separate the lubricant from the recovered refrigerant and accurately indicate the amount removed from the system during processing in 30 ml units.

6.7.1 The purpose of indicating the amount of lubricant removed is to ensure that a proper amount is returned to the mobile air-conditioning system for compressor lubrication.

6.7.2 Refrigerant dissolved in this lubricant must be accounted for to prevent system lubricant overcharge of the mobile air-conditioning system.

6.7.3 Only new lubricant, as identified by the system manufacturer, should be replaced in the mobile air-conditioning system.

6.7.4 Removed lubricant from the system and/or the equipment shall be disposed of in accordance with applicable federal, state and local procedures and regulations.

6.8 The equipment must be capable of continuous operation in ambient temperatures of 10 °C to 49 °C and comply with 6.1.

6.9 The equipment should be compatible with leak detection material that may be present in the mobile air-conditioning system.

7.0 For test validation, the equipment is to be operated according to the manufacturer's instructions.

[60 FR 21688, May 2, 1995]

APPENDIX C TO SUBPART B OF PART 82—SAE J2788 STANDARD FOR RECOVERY/RECYCLE AND RECOVERY/RECYCLE/RECHARGING EQUIPMENT FOR HFC–134a REFRIGERANT

FOREWORD

This Appendix establishes the specific minimum equipment requirements for the recovery/recycling of HFC–134a that has been directly removed from, and is intended for reuse in, mobile air-conditioning systems and recovery/recycling and system recharging of recycled, reclaimed or virgin HFC–134a. Establishing such specifications will ensure that system operation with recycled HFC–134a will provide the same level of performance and durability as new refrigerant.

1. SCOPE

The purpose of this SAE Standard is to establish the specific minimum equipment performance requirements for recovery and recycling of HFC–134a that has been directly removed from, and is intended for reuse in, mobile air-conditioning (A/C) systems. It also is intended to establish requirements for equipment used to recharge HFC–134a to an accuracy level that meets Section 9 of this document and SAE J2099. The requirements apply to the following types of service equipment and their specific applications.

a. Recovery/Recycling Equipment,

b. Recovery/Recycling—Refrigerant Charging,

c. Refrigerant Recharging Equipment Only.

1.1 Improved refrigerant recovery equipment is required to ensure adequate refrigerant recovery to reduce emissions and provide for accurate recharging of mobile air conditioning systems. Therefore, 12 months following the publication date of this standard, requirements in this standard supplements and supersedes, SAE J2210.

2. References

2.1 Applicable Publications

The following publications form a part of this specification to the extent specified herein. Unless otherwise indicated, the latest issue of SAE publications shall apply.

2.1.1 SAE Publications

Available from SAE, 400 Commonwealth Drive, Warrendale, PA 15096–0001, Tel: 877–606–7323 (inside USA and Canada) or 724–776–4970 (outside USA), www.sae.org.

SAE J2099 Standard of Purity for Recycled HFC–134a (R–134a) for Use in Mobile Air-Conditioning Systems

SAE J2196 Service Hoses for Automotive Air-Conditioning

SAE J2197 Service Hose Fittings for Automotive Air-Conditioning

SAE J2296 Retest of Refrigerant Container

2.1.2 CGA Publications

Available from CGA, 4221 Walney Road, 5th Floor, Chantilly VA 20151–2923, Tel: 703–788–2700, *http://www.cganet.com.*

CGA Pamphlet S–1.1 Pressure Relief Device Standard Part 1—Cylinders for Compressed Gases 2.1.3 DOT Publications

Available from the Superintendent of Documents, U.S. Government Printing Office, Mail Stop: SSOP, Washington, DC 20402–9320.

OT Standard, CFR Title 49, Section 173.304 Shippers—General Requirements for Shipments and Packagings

2.1.4 UL Publications

Available from Underwriters Laboratories Inc., 333 Pfingsten Road, Northbrook, IL 60062–2096, Tel: 847–272–8800, *http://www.ul.com.*

UL 1769 Cylinder Valves

UL 1963 Refrigerant Recovery/Recycling Equipment

3. Specification and General Description

3.1 The equipment must be able to remove and process HFC–134a (R–134a) from mobile A/C systems to the purity level specified in SAE J2099.

3.2 The equipment shall be suitable for use in an automotive service garage environment and be capable of continuous operation in ambients from 10 °C to 49 °C (50 °F to 120 °F). If it is designed to recharge a system, and it uses a scale for this purpose, the scale must demonstrate the ability to maintain accuracy per the test in 10.2.

3.3 The equipment must be certified that it meets this specification by an EPA listed certifying laboratory.

3.4 The equipment shall have a label, which states, ''Certified by (Certifying Agent) to Meet SAE J2788 superseding SAE J2210'' in bold-type letters a minimum of 3 mm (⅛ in) in height.

4. Refrigerant Recycling Equipment Requirements

4.1 Moisture and Acid

The equipment shall incorporate a desiccant package that must be replaced before saturation with moisture, and whose mineral acid capacity is at least 5% by weight of the dry desiccant.

4.1.1 The equipment shall be provided with a means of indicating when the filter desiccant moisture capacity has reached the allowable limit and desiccant replacement is required. This may include a reliable means of detecting moisture level or an algorithm based on the amount refrigerant recovered. The user must be clearly alerted to replace the filter prior to the full saturation. Warnings shall be displayed on screens and (printed on printouts where applicable). The warnings must explain that the machine is approaching the end of filter life. The manufacturer must incorporate a lockout when the end of filter life is reached.

4.1.2 The manufacturer shall use an identification system to ensure that a new filter has been installed to reset the machine for operation.

4.2 Filter

The equipment shall incorporate an in-line filter that will trap particulates of 15 micron spherical diameter or greater.

4.3 Scale (if used)

The scale must maintain accuracy when moved, as per the test in Section 10.

4.4 Purging Noncondensable Gases

4.4.1 The equipment shall automatically purge noncondensables (NCGs), which are primarily air, if the acceptable level is exceeded. NCG removal must be part of the normal operation of the equipment and instructions must be provided to enable the task to be accomplished within 30 min (to reach the refrigerant purity level specified in SAE J2099).

4.4.2 Refrigerant loss from noncondensable gas purging during the testing described in Section 8 shall be minimized by a method that initiates a purge when the machine has not been in use for a period long enough for air-refrigerant separation in the tank to have occurred.

4.5 Recharging and Transfer of Recycled Refrigerant

Recycled refrigerant for recharging and transfer shall be taken from the liquid phase only.

5. SAFETY REQUIREMENTS

5.1 The equipment must comply with applicable federal, state, and local requirements on equipment related to handling HFC–134a material. Safety precautions or notices related to safe operation of the equipment shall be prominently displayed on the equipment and should also state ''CAUTION—SHOULD BE OPERATED BY QUALIFIED PERSONNEL.''

5.2 Under NO CIRCUMSTANCES should any equipment be pressure tested or leak tested with air/HFC–134a mixtures.

Do not use compressed air (shop air) or leak detection in systems containing HFC–134a.

6. OPERATING INSTRUCTIONS

6.1 The equipment manufacturer shall provide a warning in the instruction manual regarding the possibility of refrigerant contamination in the mobile A/C system being serviced.

6.1.1 If recovery/recycle equipment has refrigerant identification equipment, the refrigerant identification equipment shall meet the requirements of SAE J1771.

6.1.2 Recovery/recycling equipment not having refrigerant identification capability shall have instructions in the equipment manual covering possible contamination problems to the equipment and the contamination of the existing recycled refrigerant in the container in the equipment.

6.2 The equipment manufacturer must provide operating instructions, including proper attainment of vehicle system vacuum (i.e., when to stop the extraction process), filter/desiccant replacement, and purging of noncondensable gases (air). Also to be included are any other necessary maintenance procedures, source information for replacement parts and, repair and safety precautions.

6.2.1 The manual shall identify the proper maintaining of hose and seals to prevent the addition of excess air, due to leaks, during the recovery process, which would increase the NCG level in the recovered refrigerant.

6.3 The equipment must prominently display the manufacturer's name, address, the type of refrigerant it is designed to recycle, a service telephone number, and the part number for the replacement filter/drier.

7. FUNCTIONAL DESCRIPTION

The ability of the equipment to meet the refrigerant recovery and recharge specifications of this section shall be determined by the test procedures of Section 10.

7.1 The equipment must be capable of continuous operation in ambient temperatures of 10 °C (50 °F) to 49 °C (120 °F). Continuous is defined as completing recovery/recycle and recharge (if applicable) operations with no more than a brief reset period between vehicles, and shall not include time delays for allowing a system to outgas (which shall be part of the recovery period provided by this standard). Continuous may include time out for an air purge if necessary, although it is understood that extended equipment-off time is preferred to allow NCG and refrigerant separation in the supply tank for optimum results.

7.1.1 The equipment shall be capable of removing a minimum of 95.0% of the refrigerant from the test system in 30 minutes or less, without external heating, or use of any device (such as shields, reflectors, special lights, etc.) which could heat components of the system. The recovery procedures shall be based on 21 to 24 °C (70 to 75 °F) ambient temperature. The test system for qualifying shall be a 1.4 kg (3.0 lbs) capacity orifice tube/accumulator system in a 2005 Chevrolet Suburban with front and rear A/C, or the test option described in 10.5, and shall be determined by accurately weighing the recovery machine with the resolution and accuracy of within 3 g (.006 lb) in the range of the machine's weight. The laboratory shall maintain records of the vehicle, including its VIN (vehicle identification number).

7.1.2 However, the preceding shall not preclude a brief period of engine operation at fast idle (up to 15 minutes, up to 2000 rpm) to circulate refrigerant and oil, and provide some engine and warm-up of A/C refrigeration components. The laboratory shall monitor coolant temperature per the vehicle engine coolant temperature sensor, and coolant temperature shall not be allowed to exceed 105 °C (221 °F). The time required shall not be included in the total time of 30 minutes set forth in 7.1.1.

7.1.3 The refrigerant that is recovered, following oil separation, shall be measured and the quantity displayed, accurate to

within ±30 g (1.0 oz). The equipment must include a provision for checking the accuracy, per the requirements of 9.1.

7.2 During recovery operation, the equipment shall provide overfill protection to assure that the liquid fill of the storage container (which may be integral or external) does not exceed 80% of the tank's rated volume at 21 °C per Department of Transportation (DOT) Standard, CFR Title 49, Section 173.304 and the American Society of Mechanical Engineers.

7.3 Portable refillable tanks or containers used in conjunction with this equipment must be labeled ''HFC–134a (R–134a),'' meet applicable Department of Transportation (DOT) or Underwriters Laboratories (UL) Standards, and shall incorporate fittings per SAE J2197.

7.3.1 The cylinder valve shall comply with the standard for cylinder valves, UL 1769.

7.3.2 The pressure relief device shall comply with the Pressure Relief Device Standard Part 1—Cylinders for Compressed Gases, CGA Pamphlet S–1.1.

7.3.3 The tank assembly shall be marked to indicate the first retest date, which shall be 5 years after the date of manufacture. The marking shall indicate that retest must be performed every subsequent 5 years. SAE J2296 provides an inspection procedure. The marking shall be in letters at least 6 mm (¼ in) high.

7.3.4 ASME tanks as defined in UL–1963 may be used and are exempt from the retest requirements.

7.3.5 If the machine is designed for recharging, and the marketer permits use of a non-refillable refrigerant tank, the machine shall include a way to ensure refrigerant remaining in the tank (called the ''heel'') to no more than 2% of tank rated capacity when the tank is indicated to be empty. This may be done by the machine marketer as follows:

• Specify a non-venting procedure, to minimize the amount of unused refrigerant remaining in the tank. The machine shall include any devices required for the procedure, other than ordinary service shop tools and supplies, and include in the operator's manual, any instructions.

• Provide an automatic or (with instructions in the operator's manual) semi-automatic non-venting procedure with the machine.

The laboratory shall test for the 2% capability. For testing purposes it may use a refillable tank, minimum 15 lb capacity (6.8 kg) containing a minimum of 7.5 lbs (3.4 kg) refrigerant. The test is as follows:

a. Weigh the tank at the start of the test, on a scale accurate to plus/minus 3 grams, to ensure it contains sufficient refrigerant.

b. Operate the machine to remove refrigerant from the tank, charging into a holding container until the tank is indicated to be empty. Continue with the marketer's recommended procedure for the 2% capability.

c. Weigh the tank, on a scale accurate to plus/minus 3 grams.

d. Using the recovery compressor and/or a vacuum pump, draw the tank into a vacuum of 9 to 10 inches Mercury (225 to 250 mm Mercury). The tank must hold that vacuum with a decay of less than 10% in 10 minutes. If vacuum decays 10% or more, the procedure shall be repeated as necessary to ensure the tank is empty.

e. Weigh the tank on a scale accurate to plus/minus 3 grams. The difference in weight from Steps 3 to 5 shall be within 2% of the weight of the amount of refrigerant that is the tanks rated capacity.

f. This test may be performed at the conclusion of testing in 10.4 or 10.5. If the machine passes or has passed all other testing in this standard, the marketer may make modifications in procedure and/or machine operation and retest once at a later date, within 90 days. If the machine fails the retest, the machine must be completely retested per this standard, or may be certified per the following alternative. The marketer of the machine may specify use of a non-refillable refrigerant tank that provides for recycling and/or disposal of the residual refrigerant, in either case in a manner that does not vent. Or the marketer may exclude use of a one-way container, in the machine's operating instructions.

7.4 All flexible hoses must comply with SAE J2196.

7.5 Service hoses must have shutoff devices located at the connection point to the system being serviced. Any hoses or lines connected to refrigerant containers on or in the machine also shall have shutoff devices at the connection points, so that the containers may be changed without loss of refrigerant. A tank that is a permanent installation is exempt from this requirement.

7.6 The equipment shall separate oil from the refrigerant, measure the amount accurate to 20 ml (0.7 oz.), so the technician has an accurate basis for adding oil to the system.

7.6.1 This statement shall be predominately identified in the equipment service manual.

NOTE: Use only new lubricant to replace the amount removed during the recycling process. Used lubricant should be discarded per applicable federal, state and local requirements.

8. TESTING

This test procedure and its requirements are to be used to determine the ability of the recycling equipment to adequately recycle contaminated refrigerant.

8.1 The equipment shall be able to clean the contaminated refrigerant in §8.3 to the purity level defined in SAE J2099.

8.2 The equipment shall be operated in accordance with the manufacturer's operating instructions.

8.3 Contaminated HFC–134a (R–134a) Sample

8.3.1 The standard contaminated refrigerant shall consist of liquid HFC–134a with 1300 ppm (by weight) moisture (equivalent to saturation at 38°C, 100°F), 45000 ppm (by weight) HFC–134a compatible lubricant, and 1000 ppm (by weight) of noncondensable gases (air).

8.3.1.1 The HFC–134a compatible lubricant referred to in 8.3.1, shall be polyalkylene glycol (PAG), ISO 100 such as UCLN or PAG ISO 46–55, such as Idemitsu or equivalent, which shall contain no more than 1000 ppm by weight of moisture.

8.3.1.2 Although the test lubricant is a PAG, to conform to that used in the test vehicle system, the equipment manufacturer also shall ensure that it is compatible with polyol ester lubricant, such as ND 11 as used in electrically driven compressors in some hybrid vehicles.

8.4 Test Cycle

8.4.1 The equipment must be preconditioned by processing 13.6 kg (30 lb) of the standard contaminated HFC–134a at an ambient of 21 to 24°C (70 to 75°F) before starting the test cycle. 1.13 kg (2.56 lb) samples are to be processed at 5 min intervals. The test fixture, depicted in Figure 1, shall be operated at 21 to 24°C (70 to 75°F).

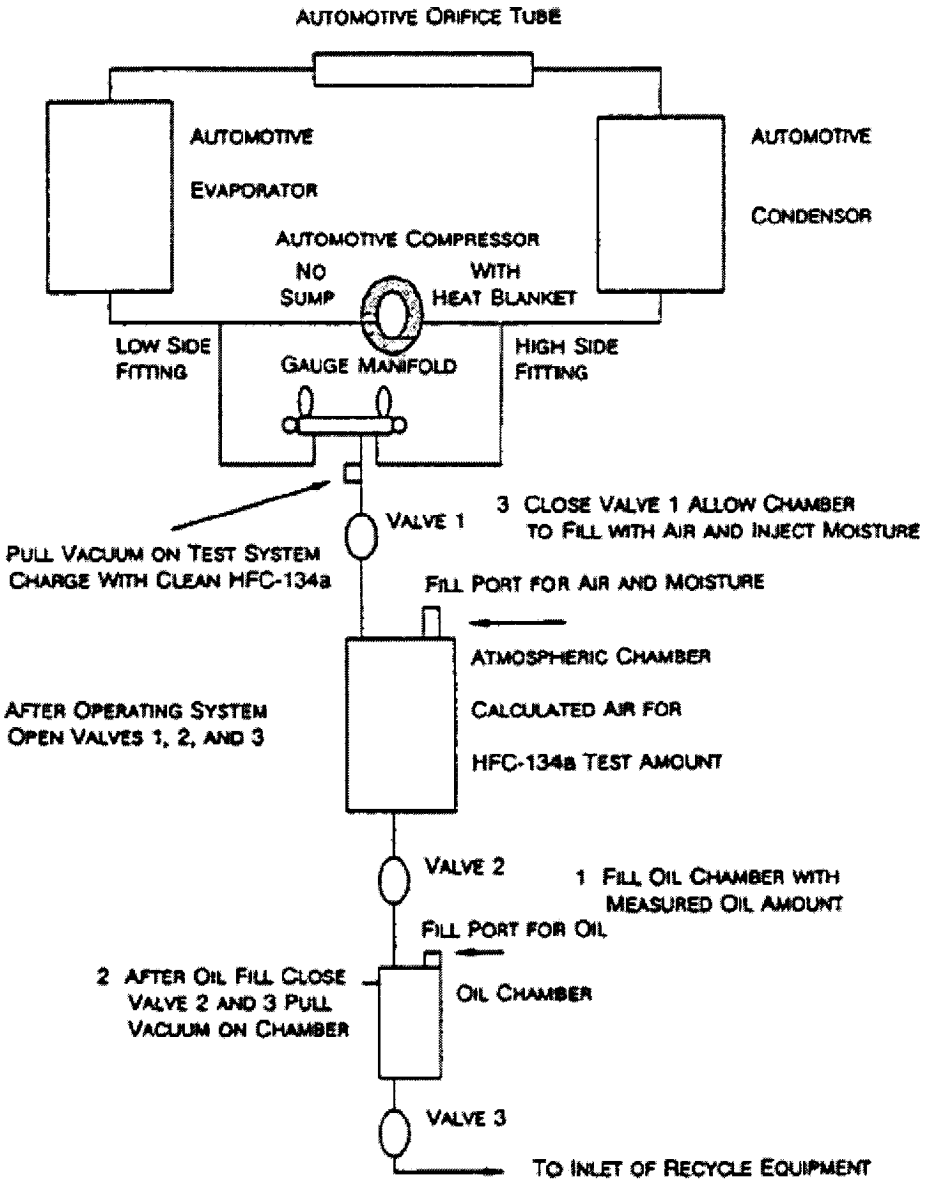

FIGURE 1 - TEST FIXTURE

8.4.2 Following the preconditioning procedure per 8.4.1, 18.2 kg (40 lb) of standard contaminated HFC–134a are to be processed by the equipment.

8.5 Sample Requirements

8.5.1 Samples of the standard contaminated refrigerant from 8.3.1 shall be processed as required in 8.6 and shall be analyzed

after said processing as defined in 8.7, 8.8, and 8.9. Note exception for noncondensable gas determination in 8.9.4.

8.6 Equipment Operating Ambient

8.6.1 The HFC–134a is to be cleaned to the purity level, as defined in SAE J2099, with the equipment operating in a stable ambient of 10, 21, and 49 °C (50, 70 and 120 °F) while processing the samples as defined in 8.4.

8.7 Quantitative Determination of Moisture

8.7.1 The recycled liquid phase sample of HFC–134a shall be analyzed for moisture content via Karl Fischer coulometric titration, or an equivalent method. The Karl Fischer apparatus is an instrument for precise determination of small amounts of water dissolved in liquid and/or gas samples.

8.7.2 In conducting this test, a weighed sample of 30 to 130 g is vaporized directly into the Karl Fischer anolyte. A coulometric titration is conducted and the results are reported as parts per million moisture (weight).

8.8 Determination of Percent Lubricant

8.8.1 The amount of lubricant in the recycled HFC–134a sample shall be determined via gravimetric analysis. The methodology must account for the hygroscopicity of the lubricant.

8.8.2 Following venting of noncondensable gases in accordance with the manufacturer's operating instructions, the refrigerant container shall be shaken for 5 min prior to extracting samples for testing.

8.8.3 A weighed sample of 175 to 225 g of liquid HFC–134a is allowed to evaporate at room temperature. The percent lubricant is calculated from weights of the original sample and the residue remaining after evaporation.

8.9 Noncondensable Gases—Testing for Amount

8.9.1 The amount of noncondensable gases shall be determined by gas chromatography. A sample of vaporized refrigerant liquid shall be separated and analyzed by gas chromatography. A Porapak Q column at 130 °C (266 °F) and a hot wire detector may be used for the analysis.

8.9.2 This test shall be conducted on liquid phase samples of recycled refrigerant taken from a full container as defined in 7.2 within 30 min following the proper venting of noncondensable gases.

8.9.3 The liquid phase samples in 8.9.2 shall be vaporized completely prior to gas chromatographic analysis.

8.9.4 This test shall be conducted at 10 and 49 °C (50 and 120 °F) and may be performed in conjunction with the testing defined in 8.6. The equipment shall process at least 13.6 kg (30 lb) of standard contaminated refrigerant for this test.

8.9.5 The equipment shall be capable of charging refrigerant into systems with various lubrication types and shall deliver less than 1% by weight residual oil during system charge if the machine permits oil charging with refrigerant (due to residual oil in the service hoses and recovery unit refrigerant circuit from prior recovery, diagnostics and oil injection. This shall be determined during SAE J2099 testing.)

9. Recharging the System

9.1 It is the responsibility of the equipment manufacturer to ensure that the vacuum removal performance leaves the system 98% free of NCGs before recharging, following recovery and recycle under the provisions of this document.

The equipment must be capable of both indicating and recharging the system to within 15 g (0.50 oz) of vehicle manufacturer's specifications. The laboratory shall test for this capability by choosing a charge amount that is within the range of the vehicle manufacturer's specifications. The equipment must indicate and charge the system with that chosen amount, within ±15 g (0.5 oz).

Example: If 500 g is chosen, the actual and indicated charge must be 485 to 515 g, with any difference between actual and indicated charge within the laboratory scale accuracy requirements of this standard. If a scale is used in the machine, the equipment manufacturer shall provide a method or service for the technician to check scale accuracy, and include any necessary accuracy-checking device (such as a calibration weight(s)) with the machine. If a mass flow system is used for charge determination, it must maintain accuracy equal to the 15 g (0.50 oz) specification. The equipment manufacturer shall provide a method for checking accuracy and include any necessary accuracy testing device(s) with the machine. If the accuracy testing device(s) for a scale or mass flow machine includes a consumable, the manufacturer shall include a quantity of replacement or refill devices for five years of periodic testing as recommended.

9.2 If any other system is used for charge determination, such as a positive displacement pump, the equipment manufacturer shall provide a method and any needed device(s) to check accuracy that is/are appropriate for its method of operation, including any temperature-compensating trim if used.

10. Equipment Test Procedure by Laboratory for Recovery/Recycling and Recovery/Recycling/Recharging Machines

10.1 Preliminary: Ambient (in shop) temperature shall be 21 to 24 °C (70 to 75 °F). Test vehicle shall be ''overnight cold'' (not run for at least eight hours).

10.2 The machine must have a self-contained provision for checking accuracy of

the indicated amount of refrigerant recovered in liquid or vapor or mixture form(s) from a vehicle system and (if applicable) charged into a vehicle, and adjusting if necessary, to meet requirements of 9.1, 9.2. Therefore: If the machine uses a scale for that purpose, check the accuracy of that scale and make any adjustment if necessary. If an alternative method of measuring refrigerant is used, follow the equipment manufacturer's procedure for ensuring accuracy. Next, move the machine, such as by rolling it, along the floor, a minimum of 20 feet (6.1 meters) within 10 seconds. Follow with the test procedure in 10.3, then 10.4 or 10.5.

10.3 Test Procedure

If desired, this test procedure may be preceded by engine/system operation for up to 15 minutes, up to 2000 rpm.

1. You must start with an empty system, using this method: (a) Operate machine to recover refrigerant, per equipment manufacturer's instructions. (b) Deep-vacuum system to a minimum of 710 mm (28 in) of mercury. (c) Monitor vacuum for decay, checking every 20 minutes. If decay exceeds 75 mm (3 in), deep vacuum the system again. When system holds 710 mm (28 in) 75 mm (3 in) of mercury vacuum for three hours, it is considered empty.

2. Place machine on a platform scale with the capacity to weigh the recovery/recycle/recharge machine, and with the resolution and accuracy of within ±3 g (.006 lb) in the range of the machine's weight. Weight should include the machine's service hoses draped over the machine, and with the machine's oil reservoir removed. If necessary to add oil to vehicle system as a result of a system operation preparatory to the recovery process, inject the needed quantity through the service valve at this time.

3. Record weight of machine in as weight A.

4. Reconnect service hoses to the test vehicle.

5. Follow the equipment manufacturer's specified procedure for charging the vehicle manufacturer's recommended amount of refrigerant into the system. Note: if this does not apply to the machine under test, *i.e.* a recovery/recycling only machine, the use of charging equipment that meets this standard and the platform scale shall be used to verify the accuracy of the charge.

6. Disconnect the service hoses from the test vehicle and drape them on the machine. Check and record the weight of the machine. Record this weight as weight B. The difference between weight A and weight B should be equal to the recommended charge that was installed per the machine's display, within 15 g (0.5 oz). If the difference is greater than 15 g (±3 g), the machine fails the charge accuracy test, and no other tests shall be performed at that time. The manufacturer must document changes made to improve accuracy and furnish them to the laboratory prior to a new test. Exception: If the maximum deviation is no more than a total of 20 g, the calibration of the scale or other measuring system may be rechecked and readjusted once, and the entire test repeated just once.

10.4 Recovery Test Using a Vehicle

1. Following a successful system charge, the system and engine shall be run for 15 minutes at 2000 rpm to circulate oil and refrigerant, following which engine and system shall rest for eight hours. Then the laboratory may begin the recovery test. If the machine manufacturer specifies, operate the engine/system for up to 15 minutes, at up to 2000 rpm, then shut off engine/system.

2. If the machine has an automatic air purge, disable it. Check the weight of the machine with the platform scale (service hoses draped over machine, oil reservoir removed). Record the number as Weight C. Reinstall oil reservoir if it had been removed in the recovery procedure.

3. Start timer. Connect service hoses to system of test vehicle and perform recovery per the equipment manufacturer's instructions. The vehicle system service valves' cores must remain in the fittings for this procedure.

4. When recovery is completed, including from service hoses if that is part of the recommended procedure, disconnect hoses and drape over machine. Stop timer. The elapsed time shall be 30.0 minutes or less. If it is in excess of this time, the machine fails the test and no retest is allowed. The manufacturer must document changes made to the machine to improve its performance before a new test is allowed, and furnish them to the laboratory.

5. If the recovery is completed in no more than the 30.0 minutes, measure the oil level in the reservoir, remove the reservoir and then determine the amount of refrigerant recovered, as detailed in Nos. 6 and 7: As measured by the machine and also by noting the weight of the platform scale, which shall be recorded as Weight D.

6. The platform scale shall indicate that a minimum of 95% of the amount charged into the system has been recovered. If the platform scale indicates a lower percentage has been recovered, the machine fails the recovery test.

7. The machine display shall indicate that a minimum of 95.0% of the amount charged into the system has been recovered, within a tolerance of ±30 g (1 oz) when compared with the platform scale (Weight D minus Weight C). The 30 g (1 oz) tolerance may produce a machine display reading that is below the 95.0% recovery. If a greater difference between machine and platform scale occurs, the machine fails the recovery test.

10.5 Recovery Test Fixture Test Option

If an equipment manufacturer chooses, as an alternative to the actual vehicle, it may certify to SAE J2788 with a laboratory fixture that is composed entirely of all the original equipment parts of a single model year for the 3.0 lb capacity front/rear A/C system in the 2005–07 Chevrolet Suburban. All parts must be those OE-specified for one model year system and no parts may be eliminated or bypassed from the chosen system, or reproduced by a non-OE source. No parts may be added and/or relocated from the OE position in the 2005–07 Suburban. No parts may be modified in any way that could affect system performance for testing under this standard, except adding refrigerant line bends and/or loops to make the system more compact. Reducing the total length of the lines, however, is not permitted. The fixture system shall be powered by an electric motor, run at a speed not to exceed 2000 rpm, and for this test option, no system warm-up or equivalent procedure may be used. The certifying laboratory shall maintain records of all parts purchased, including invoices and payments. The assembly of the parts shall, as an outside-the-vehicle package, duplicate the OE system and its routing, including bends, except for permitted additions of bends and/or loops in refrigerant lines. Aside from the absence of engine operation and the limitations posed by the standard and the use of the electric motor, the test shall otherwise be the same as the test on the Suburban, including test temperature.

[72 FR 63495, Nov. 9, 2007]

APPENDIX D TO SUBPART B OF PART 82—SAE J2810 STANDARD FOR RECOVERY ONLY EQUIPMENT FOR HFC–134a REFRIGERANT

FOREWORD

This Appendix establishes the specific minimum equipment requirements for the recovery of HFC–134a that has been directly removed from, motor vehicle air-conditioning systems.

1. Scope

The purpose of this SAE Standard is to provide minimum performance and operating feature requirements for the recovery of HFC–134a (R–134a) refrigerant to be returned to a refrigerant reclamation facility that will process it to the appropriate ARI 700 Standard or allow for recycling of the recovered refrigerant to SAE J2788 specifications by using SAE J2788-certified equipment. It is not acceptable that the refrigerant removed from a mobile air-conditioning (A/C) system with this equipment be directly returned to a mobile A/C system.

This information applies to equipment used to service automobiles, light trucks, and other vehicles with similar HFC–134a (R–134a) A/C systems.

1.1 Improved refrigerant recovery equipment is required to ensure adequate refrigerant recovery to reduce emissions and provide for accurate recharging of mobile air conditioning systems. Therefore, 12 months following the publication date of this standard, it supersedes SAE J1732.

2. References

2.1 Applicable Publications

The following publications form a part of the specification to the extent specified herein. Unless otherwise indicated, the latest revision of SAE publications shall apply.

2.1.1 SAE Publications

Available from SAE, 400 Commonwealth Drive, Warrendale, PA 15096–0001, Tel: 877–606–7323 (inside USA and Canada) or 724–776–4970 (outside USA), *http://www.sae.org*.

SAE J639 Safety Standards for Motor Vehicle Refrigerant Vapor Compressions Systems.

SAE J1739 Potential Failure Mode and Effects Analysis in Design (Design FMEA) and Potential Failure Mode and Effects Analysis in Manufacturing and Assembly Processes (Process FMEA) and Effects Analysis for Machinery (Machinery FMEA).

SAE J1771 Criteria for Refrigerant Identification Equipment for Use with Mobile Air-Conditioning Systems.

SAE J2196 Service Hose for Automotive Air Conditioning.

SAE J2296 Retest of Refrigerant Container.

SAE J2788 HFC–134a (R–134a) Recovery/Recycling Equipment and Recovery/Recycling/Recharging for Mobile Air-Conditioning Systems.

2.1.2 ARI Publication

Available from Air-Conditioning and Refrigeration Institute, 4100 North Fairfax Drive, Suite 200, Arlington, VA 22203, Tel: 703–524–8800, *http://www.ari.org*.

ARI 700 Specifications for Fluorocarbon Refrigerants.

2.1.3 CGA Publication

Available from Compressed Gas Association, 4221 Walney Road, 5th Floor, Chantilly, VA 20151–2923, Tel: 703–788–2700, *http://www.cganet.com*.

CGA S–1.1 Pressure Relief Device Standard Part 1—Cylinders for Compressed Gases.

2.1.4 DOT Specification

Available from the Superintendent of Documents, U.S. Government Printing Office, Mail Stop: SSOP, Washington, DC 20402–9320.

CFR 49, Section 173.304 Shippers—General Requirements for Shipments and Packagings.

2.1.5 UL Publication

Available from Underwriters Laboratories Inc., 333 Pfingsten Road, Northbrook, IL 60062–2096, Tel: 847–272–8800, *http://www.ul.com*.

UL 1769 Cylinder Valves.

3. Specifications and General Description

3.1 The equipment must be able to recover (extract) HFC–134a (R–134a) refrigerant from a mobile A/C system per the test procedure of sections 7 and 8.

3.2 The equipment shall be suitable for use in an automotive service garage environment as defined in 6.8.

3.3 Equipment Certification

The equipment shall be certified by an EPA-listed laboratory to meet this standard. SAE J2810.

3.4 Label Requirements

The equipment shall have a label with bold type, minimum 3 mm high, saying ''Design Certified by (certifying agent, EPA listed laboratory) to meet SAE J2810 for use only with HFC–134a (R–134a). If it is to be re-used in an A/C system, the refrigerant recovered with this equipment must be processed to the appropriate ARI 700 specifications or to specifications by using equipment certified to perform to SAE J2788.''

3.5 SAE J1739

Potential Failure Mode and Effects Analysis in Design (Design FMEA), Potential Failure Mode and Effects Analysis in Manufacturing and Assembly Processes (Process FMEA), and Potential Failure Mode and Effects Analysis for Machinery (Machinery FMEA) shall be applied to the design and development of service equipment.

4. Safety Requirements

4.1 The equipment must comply with applicable federal, state, and local requirements on equipment related to the handling of HFC–134a (R–134a) material. Safety precautions or notices, labels, related to the safe operation of the equipment shall also be prominently displayed on the equipment and should state ''CAUTION—SHOULD BE OPERATED ONLY BY CERTIFIED PERSONNEL.'' The safety identification shall be located on the front near the controls.

4.2 The equipment must comply with applicable safety standards for the electrical and mechanical systems.

5. Operating Instructions

5.1 The equipment manufacturer must provide operating instructions that include information required by SAE J639, necessary maintenance procedures, and source information for replacement parts and repair.

5.1.1 The instruction manual shall include the following information on the lubricant removed. Only new lubricant, as identified by the system manufacturer, should be replaced in the mobile A/C system. Removed lubricant from the system and/or the equipment shall be disposed of in accordance with the applicable federal, state, and local procedures and regulations.

5.2 The equipment must prominently display the manufacturer's name, address, the type of refrigerant it is designed to extract (R–134a), a service telephone number, and any items that require maintenance or replacement that affect the proper operation of the equipment. Operation manuals must cover information for complete maintenance of the equipment to assure proper operation.

5.3 The equipment manufacturer shall provide a warning in the instruction manual regarding the possibility of refrigerant contamination from hydrocarbons, leak sealants and refrigerants other than R–134a in the mobile A/C system being serviced.

5.4 Recovery equipment having refrigerant identification equipment shall meet the requirements of SAE J1771.

5.5 Recovery equipment not having refrigerant identification capability shall have instructions warning the technician that failure to verify that the system contains only R–134a potentially exposes him or her to danger from flammable refrigerants and health hazards from toxic refrigerants. The instructions also shall alert to possible contamination problems to the recovery equipment from sealants and refrigerants other than R–134a, and to the fact that a refrigerant other than R–134a would require special handling by someone with specific expertise and equipment.

6. Function Description

6.1 The equipment must be capable of continuous operation in ambient temperatures of 10 °C (50 °F) to 49 °C (120 °F). Continuous is defined as completing recovery operation with no more than a brief reset between servicing vehicles, and shall not include time delays for allowing a system to outgas (which shall be part of the recovery period provided by this standard).

6.1.1 The equipment shall demonstrate ability to recovery a minimum of 95.0% of the refrigerant from the test vehicle in 30.0 minutes or less, without prior engine operation (for previous eight hours minimum), external heating or use of any device (such as shields, reflectors, special lights, etc.), which could heat components of the system.

The recovery procedure shall be based on a test at 21 °C to 24 °C (70 °F to 75 °F) ambient temperature. The test system for qualifying shall be a 1.4 kg (3.0 lbs) capacity orifice tube/accumulator system in a 2005–07 Chevrolet Suburban with front and rear A/C or the test option described in section 9.

6.1.2 The equipment shall demonstrate ability to recover a minimum of 85% of the refrigerant from the test vehicle or system of 6.1.1. in 30.0 minutes or less, at an ambient temperature of 10 °C to 13 °C (50 °F to 55 °F), subject to the same restrictions regarding engine operation and external heating.

6.1.3 During recovery operation, the equipment shall provide overfill protection so that the liquid fill of the storage container does not exceed 80% of the tank's rated volume at 21 °C (70 °F). This will ensure that the container meets Department of Transportation (DOT) Standard, CFR Title 49, section 173.304 and the American Society of Mechanical Engineers.

6.1.4 Portable refillable tanks or containers used in conjunction with this equipment must be labeled ''HFC–134a (R–134a) and meet applicable Department of Transportation (DOT) or Underwriters Laboratories (UL) Standards, and incorporate fittings per SAE J2197.

6.1.5 The cylinder valves shall comply with the standard for cylinder valves UL 1769.

6.1.6 The pressure relief device shall comply with the Pressure Relief Device Standard Part 1—Cylinders for Compressed Gasses CGA Pamphlet S–1.1.

6.1.7 The tank assembly shall be marked to indicate the first retest date, which shall be five years from the date of manufacture. The marking shall indicate that retest must be performed every subsequent five years. SAE J2296 provides an inspection procedure. The marking shall be in letters at least 6 mm (0.25 in) high. If ASME tanks, as defined in UL–1963, are used, they are exempt from the retest requirements.

6.2 If the marketer permits use of a refillable refrigerant tank, a method must be provided (including any necessary fittings) for transfer to a system that ensures proper handling (recycling or other, environmentally-legal disposal).

Restricting the equipment to use of non-refillable tanks eliminates compliance with this provision.

6.3 Prior to testing under this standard, the equipment must be preconditioned with a minimum of 13.6 kg of the standard contaminated HFC–134a (R–134a) at an ambient of 21 °C before starting the test cycle. Sample amounts are not to exceed 1.13 kg with sample amounts to be repeated every 5 min. The test fixture shown in Figure 1 shall be operated at 21 °C. Contaminated HFC–134a (R–134a) samples shall be processed at ambient temperatures of 10 °C and 49 °C (50 °F to 120 °F), without the equipment shutting down due to any safety devices employed in this equipment.

6.3.1 Contaminated HFC–134a (R–134a) sample shall be standard contaminated HFC–134a (R–134a) refrigerant, 13.6 kg sample size, consisting of liquid HFC–134a (R–134a) with 1300 ppm (by weight) moisture at 21 °C (70 °F) and 45 000 ppm (by weight) of oil (polyalkylene glycol oil with 46–160 cst viscosity at 40 °C) and 1000 ppm by weight of noncondensable gases (air).

6.3.2 Portable refillable containers used in conjunction with this equipment must meet applicable DOT Standards. The color of the container must be blue with a yellow top to indicate the container holds used HFC–134a (R–134a) refrigerant. The container must be permanently marked on the outside surface in black print at least 20 mm high, ''CONTAMINATED HFC–134a (R–134a)—DO NOT USE, MUST BE REPROCESSED.''

Figure 1—Test Fixture

6.3.3 The portable refillable container shall have a 1/2 in ACME thread.

6.4 Additional Storage Tank Requirements.

6.4.1 The cylinder valve shall comply with UL 1769.

6.4.2 The pressure relief device shall comply with CGA Pamphlet S–1.1.

6.5 All flexible hoses must meet SAE J2196 for service hoses.

6.6 Service hoses must have shutoff devices located at the connection points to the system being serviced to minimize introduction of noncondensable gases into the recovery equipment during connection and the release of the refrigerant during disconnection.

6.7 The equipment must be able to separate the lubricant from recovered refrigerant and accurately indicate the amount removed from the simulated automotive system during processing in 20 mL (0.7 fl oz) units.

6.7.1 The purpose of indicating the amount of lubricant removed is to ensure that a proper amount of new lubricant is returned to the mobile A/C system for compressor lubrication, if the system is to be charged with equipment meeting SAE J2788.

6.7.2 Refrigerant dissolved in this lubricant must be accounted for to prevent lubricant overcharge of the mobile A/C system.

6.8 The equipment must be capable of continuous operation in ambient temperatures of 10 °C to 49 °C (50 °F to120 °F) and comply with 6.1 to 6.4 of this standard.

6.9 For test validation, the equipment is to be operated according to the manufacturer's instructions.

7. Test Procedure A at 21 °C to 24 °C (70 °F to 75 °F).

The test vehicle (2005–2007 Chevrolet Suburban with rear A/C system—1.4 kg/ 3.0 lb) or laboratory fixture per section 10.5 of SAE

J2788, shall be prepared as for SAE J2788, section 10.3, following Steps 1, 2, 3, 4, and then the following:

7.1 Using a machine certified to SAE J2788 and with the machine on a platform scale with accuracy to within plus/minus 3.0 grams at the weight of the machine, charge the system to the vehicle manufacturer's recommended amount of refrigerant (1.4 kg–3.0 lb). The actual charge amount per the reading on the platform scale shall be used as the basis for the recovery efficiency of the recovery-only machine being tested to this standard. Run the engine (or operate test fixture with electric motor) for up to 15 minutes at up to 2000 rpm to circulate oil and refrigerant. The system then must rest for eight hours.

7.2 Place the recovery machine on the platform scale and record the weight with the hoses draped over the machine. Ambient temperature shall be within the range of 21 °C to 24 °C (70 °F to 75 °F) for this test, which shall be performed without the immediately prior engine operation permitted by SAE J2788, Section 10.3, Step No.1. The only permitted engine operation is as specified in 7.1.

7.3 Start the timer. Connect the service hoses to the system of the test vehicle and perform the recovery per the equipment manufacturer's instructions. The vehicle system's service valve cores must remain in the fittings for this procedure.

7.4 When recovery is completed, including from the service hoses if that is part of the recommended procedure, disconnect the hoses and drape over the machine. Stop the timer. The elapsed time shall be no more than 30 minutes.

7.5 Remove the oil reservoir, empty and reinstall. The platform scale shall indicate that a minimum of 95.0% of the refrigerant has been recovered, based on the charge amount indicated by the platform scale. If the machine has recovered the minimum of 95.0% within the 30.0 minutes, the next test shall be performed. If it fails this test, the marketer of the equipment must document changes to the equipment to upgrade performance before a retest is allowed. If it passes, the laboratory can proceed to Test Procedure B–10 °C to 13 °C (50 °F to 55 °F).

8. Test Procedure B at 10 °C to 13 °C (50 °F to 55 °F).

The test vehicle (2005–2007 Chevrolet Suburban front/rear A/C system (1.4 kg/3.0 lb) or test fixture per section 10.5 of SAE J2788, shall be prepared as per 7.0 and 7.1 of this standard, and then the following:

8.1 Place the recovery machine on the platform scale and record the weight with the hoses draped over the machine.

Ambient temperature at this time shall be no higher than 10 °C to13 °C (50 °F to 55 °F).

8.2 Start the timer. Connect the service hoses to the system of the test vehicle and perform the recovery per the equipment manufacturer's instructions. This also shall be performed without the immediately prior engine operation permitted by SAE J2788, section 10.4, Step No. 1. The vehicle system's service valve cores must remain in the fittings for this procedure.

8.3 When recovery is completed, including from the service hoses if that is part of the recommended procedure, disconnect the hoses and drape over the machine. Stop the timer. The elapsed time shall be no more than 30 minutes.

8.4 Remove the oil reservoir, empty and reinstall. The platform scale shall indicate that a minimum of 85.0% of the refrigerant has been recovered, based on the charge amount indicated by the platform scale. If the machine has recovered the minimum of 85.0% within the 30 minutes, it has passed the test procedure and if it meets all other requirements of this standard, it is certified.

9. Test Option

As in SAE J2788, Section 10.5, as an alternative to a 2005–2007 Chevrolet Suburban with rear A/C (1.4 kg–3.0 lb) system, a laboratory test fixture may be used to certify to SAE J2810 the fixture must be composed entirely of all the original equipment parts of a single model year for the 1.4 kg (3.0 lb) capacity system. All parts must be those OE-specified for one model year system and no parts may be eliminated or bypassed from the chosen system or reproduced from a non-OE source. No parts may be added and/or relocated from the OE position in the 2005–07 Suburban. No parts may be modified in any way that could affect system performance for testing under this standard, except adding refrigerant line bends and/or loops to make the system more compact. Reducing the total length of the lines, however, is not permitted.

The fixture systems for this standard shall not be powered by an electric motor during recovery, although a motor can be used, run at a speed not to exceed 2000 rpm, as part of the preparatory process, including installation of the charge.

[73 FR 34647, June 18, 2008]

APPENDIX E TO SUBPART B OF PART 82—THE STANDARD FOR AUTOMOTIVE REFRIGERANT RECYCLING EQUIPMENT INTENDED FOR USE WITH BOTH CFC-12 AND HFC-134a

SAE J2211, Recommended Service Procedure for the Containment of HFC-134a, as set forth under Appendix C of this subpart, and SAE J1989, Recommended Service Procedure for the Containment of CFC-12, as set forth under Appendix A of this subpart, also apply to this Appendix E of this subpart.

SAE J1770, issued December, 1995.

AUTOMOTIVE REFRIGERANT RECYCLE EQUIPMENT INTENDED FOR USE WITH BOTH CFC-12 AND HFC-134a

Foreword

The purpose of this standard is to establish specific minimum equipment requirements for automotive refrigerant recycling equipment intended for use with both CFC-12 and HFC-134a in a common refrigerant circuit. Establishing such specifications will assure that this equipment does not cross contaminate refrigerant above specified limits when used under normal operating conditions.

1. Scope

The purpose of this standard is to establish the specific minimum equipment intended for use with both CFC-12 and HFC-134a in a common refrigerant circuit that has been directly removed from, and is intended for reuse in, mobile air-conditioning (A/C) systems. This standard does not apply to equipment used for CFC-12 and HFC-134a having a common enclosure with separate circuits for each refrigerant.

2. References

2.1 Applicable Documents—The following publications form a part of this specification to the extent specified. The latest issue of SAE publications shall apply.

2.1.1 SAE Publications—Available from SAE, 400 Commonwealth Drive, Warrendale, PA 15096–0001.

SAE J2099—Standard of Purity for Recycled HFC-134a for Use in Mobile Air-Conditioning Systems

SAE 1991—Standard of Purity for Use in Mobile Air-Conditioning Systems

SAE J2196—Service Hoses for Automotive Air-Conditioning

SAE J2197—Service Hose Fittings for Automotive Air-Conditioning

SAE J2210—HFC-134a (R–134a) Recycling Equipment for Mobile A/C Systems

SAE J1990—Extraction and Recycling Equipment for Mobile A/C Systems

2.1.2 Compressed Gas Association (CGA) Publications—Available from CGA, 1235 Jefferson Davis Highway, Arlington, VA 22202.

CGA Pamphlet S–1.1—Pressure Relief Device Standard

Part 1—Cylinders for Compressed Gases

2.1.3 DOT Publications—Available from the Superintendent of Documents, U.S. Government Printing Office, Washington, D.C. 20402

2.1.4 UL Publications—Available from Underwriters Laboratories, 333 Pfingsten Road, Northbrook, IL 60062–2096.

UL 1769—Cylinder Valves

UL 1963—Refrigerant Recovery/Recycling Equipment

3. Specification and General Description

3.1 The equipment shall be suitable for use in an automotive service garage environment and be capable of continuous operation in ambients from 10 to 49 °C.

3.2 The equipment must be certified that it meets this specification by Underwriters Laboratories Inc. (UL), or by an equivalent Nationally Recognized Testing Laboratory (NRTL).

3.3 The equipment shall have a label which states ''Design Certified by (Certifying Agent) to meet SAE J1770 for recycling CFC-12 and HFC-134a using common refrigerant circuits'', in bold-type letters a minimum of 3 mm in height.

4. Equipment Requirements

4.1 General

4.1.1 The equipment shall be capable of preventing cross contamination to the level required by Section 9.2.1.G before an operation involving a different refrigerant can begin. The equipment must prevent initiation of the recovery operation if the equipment is not set up properly.

4.1.2 If an operator action is required to clear the unit prior to reconnecting for a different refrigerant, the equipment shall be provided with a means which indicates which refrigerant was last processed.

4.1.3 Means shall be provided to prevent recovery from both an CFC-12 and HFC-134a mobile air conditioning system concurrently.

4.1.4 Transfer of recycled refrigerant—Recycled refrigerant for recharging and transfer shall be taken from the liquid phase only.

4.2 Seat Leakage Test

4.2.1 Valves, including electrically operated solenoid valves, that are used to isolate CFC-12 and HFC-134a refrigerant circuits, shall have a seat leakage rate not exceeding 15 g/yr (½ oz/yr) before and after 100,000 cycles of operation. This Endurance Test shall be conducted with HFC-134a at maximum operating pressure as determined by sections 8.1 and 8.2. The Seat Leakage Test shall be performed at 1.5 times this pressure at an ambient of 24 °C.

4.3 Interlocks

4.3.1 Electrical interlock devices used to prevent cross contamination of refrigerant shall be operated for 100,000 cycles and there shall be no failure that would permit cross contamination of refrigerant. Solid state inter lock devices shall comply with the Transient Overvoltage Test and the Fast Transient (Electric Noise) Test contained in the Standard for Tests for Safety Related Controls Employing Solid-State Devices, UL 991.

4.4 Noncondensable Gases

4.4.1 The equipment shall either automatically purge noncondensables (NCGs) if

the acceptable level is exceeded or incorporate a device that indicates to the operator the NCG level has been exceeded. A pressure gauge used to indicate an NCG level shall be readable in 1 psig increments. NCG removal must be part of the normal operation of the equipment and instructions must be provided to enable the task to be accomplished within 30 minutes.

4.4.2 Refrigerant loss from noncondensable gas purging, oil removal, and refrigerant clearing shall not exceed more than 5 percent by weight of the total amount of refrigerant through the equipment as detailed in Sections 8.1, 8.2, and 9.2.

4.5 Filter

4.5.1 A 15 micron filter, or other equivalent means, to remove particulates of 15 micrometers spherical diameter or greater shall be located before any manual electrically operated valves that may cause cross contamination.

4.6 Moisture and Acid

4.6.1 The equipment shall incorporate a desiccant package that must be replaced before saturated with moisture, and whose acid capacity is at least 5% by weight of the dry desiccant.

4.6.2 The equipment shall be provided with a moisture detection means that will reliably indicate when moisture in the HFC-134a exceeds 50 ppm, or in the CFC-12 exceeds 15 ppm, and requires the filter/drier replacement.

5. Operating Instructions

5.1 The equipment manufacturer must provide operating instructions, including proper attainment of vehicle system vacuum (*i.e.*, when to stop the extraction process, and also to stop the extraction process if it is noticed that the A/C system being serviced has a leak), filter/desiccant replacement, and purging of noncondensable gases (air). The instructions shall indicate that the correct sequence of operation be followed so that the equipment can properly remove contaminates to the acceptable level. Also to be included are any other necessary maintenance procedures, source information for replacement parts and repair, and safety precautions.

5.2 The equipment must prominently display the manufacturer's name, address, the type of refrigerant (CFC-12 and HFC-134a), a service telephone number, and the part number for the replacement filter/drier. Operation manuals must cover information for complete maintenance of the equipment to assure proper operation.

6. Safety Requirements

6.1 The equipment must comply with applicable federal, state, and local requirements on equipment related to handling CFC-12 and HFC-134a material. Safety precautions or notices related to the safe operation of the equipment shall be prominently displayed on the equipment and should also state ''CAUTION—SHOULD BE OPERATED BY QUALIFIED PERSONNEL''.

6.2 HFC-134a has been shown to be nonflammable at ambient temperature and atmospheric pressure. The following statement shall be in the operating manual: ''Caution: HFC-134a service equipment or vehicle A/C systems should not be pressure tested or leak tested with compressed air. Some mixtures of air and HFC-134a have been shown to be combustible at elevated pressures (when contained in a pipe or tank). These mixtures may be potentially dangerous, causing injury or property damage. Additional health and safety information may be obtained from refrigerant and lubricant manufacturers.''

7. Functional Description

7.1 General

7.1.1 The equipment must be capable of ensuring recovery of the CFC-12 and HFC-134a from the system being serviced, by reducing the system to a minimum of 102 mm of mercury below atmospheric pressure (*i.e.*, vacuum).

7.1.2 The equipment must be compatible with leak detection material that may be present in the mobile A/C system.

7.2 Shut Off Device

7.2.1 To prevent overcharge, the equipment must be equipped to protect the tank used to store the recycled refrigerant with a shutoff device and a mechanical pressure relief valve.

7.3 Storage Tanks

7.3.1 Portable refillable tanks or containers shall be supplied with this equipment and must be labeled ''HFC-134a'' or ''CFC-12'' as appropriate, meet applicable Department of Transportation (DOT) or NRTL's Standards and be adaptable to existing refrigerant service and charging equipment.

7.3.2 The cylinder valve shall comply with the Standard for Cylinder Valves, UL 1769.

7.3.3 The pressure relief device shall comply with the Pressure Relief Device Standard Part 1—Cylinders for Compressed Gases, CGA Pamphlet S–1.1.

7.3.4 The tank assembly shall be marked to indicate the first retest date, which shall be 5 years after the date of manufacture. The marking shall indicate that retest must be performed every subsequent 5 years. The marking shall be in letters at least 6 mm high.

7.4 Overfill Protection

7.4.1 During operation, the equipment must provide overfill protection to assure that during filling or transfer, the tank or storage container cannot exceed 80% of volume at 21.1 °C of its maximum rating as defined by DOT standards, 49 CFR 173.304 and American Society of Mechanical Engineers.

7.5 Hoses and Connections

7.5.1 Separate inlet and outlet hoses with fittings and separate connections shall be provided for each refrigerant circuit.

7.5.2 All flexible hoses and fittings must meet SAE J2196 (for CFC-12) and SAE J2197 (for HFC-134a).

7.5.3 Service hoses must have shutoff devices located within 30 cm of the connection point to the system being serviced.

7.6 Lubricant Separation

7.6.1 The equipment must be able to separate the lubricant from the removed refrigerant and accurately indicate the amount of lubricant removed during the process, in 30 mL (1 fl oz) units. Refrigerant dissolves in lubricant and, as a result, increases the volume of the recovered lubricant sample. This creates the illusion that more lubricant has been recovered that actually has been. The equipment lubricant measuring system must take into account such dissolved refrigerant removed from the A/C system being serviced to prevent overcharging the vehicle system with lubricant.

(NOTE: Use only new lubricant to replace the amount removed the recycling process. Used lubricant should be discarded per applicable federal, state and local requirements.)

7.6.2 The equipment must be provided with some means, such as a lockout device, which will prevent initiation of the recovery operation after switching to the other refrigerant, if the lubricant has not been drained from the oil separator.

8. Testing

8.0 Equipment shall be tested in sequence as noted in sections 8.1, 8.2 and 9.2. The filter/drier may be replaced only as noted by section 4.6.2.

8.1 CFC-12 Recycling Cycle

8.1.1 The maximum operating pressure of the equipment shall be determined when recycling CFC-12 while conducting the following tests. This pressure is needed for the Seat Leakage Test, Section 4.2.

8.1.2 The equipment must be preconditioned with 13.6 kg of the standard contaminated CFC-12 (see section 8.1.2a) at an ambient of 21 °C before starting the test cycle. Sample amounts shall be 1.13 kg with sample amounts to be repeated every 5 minutes. The sample method fixture, defined in Figure 1 to Appendix A, shall be operated at 21 °C.

8.1.2a Standard contaminated CFC-12 refrigerant shall consist of liquid CFC-12 with 100 ppm (by weight) moisture at 21 °C and 45,000 ppm (by weight) mineral oil 525 suspension viscosity nominal and 770 ppm by weight of noncondensable gases (air).

8.1.3 The high moisture contaminated sample shall consist of CFC-12 vapor with 1000 ppm (by weight) moisture.

8.1.4 The high oil contaminated sample shall consist of CFC-12 with 200,000 ppm (by weight) mineral oil 525 suspension viscosity nominal.

8.1.5 After preconditioning as stated in section 8.1.2, the test cycle is started, processing the following contaminated samples through the equipment.

A. 13.6 kg (1.13 kg per batch) of standard contaminated CFC-12.

B. 1 kg of high oil contaminated CFC-12.

C. 4.5 kg (1.13 kg per batch) of standard contaminated CFC-12.

D. 1 kg of high moisture contaminated CFC-12.

8.1.6 The CFC-12 is to be cleaned to the minimum purity level, as defined in SAE J1991, with the equipment operating in a stable ambient of 10, 21, and 49 °C and processing the samples as defined in section 8.1.5.

8.2 HFC-134a Recycling Cycle

8.2.1 The maximum operating pressure of the equipment shall be determined when recycling HFC-134a while conducting the following tests. This pressure is needed for the Seat Leakage Test, Section 4.2.

8.2.2 The equipment must be preconditioned by processing 13.6 kg of the standard contaminated HFC-134a (see section 8.2.2a) at an ambient of 21 °C before starting the test cycle. 1.13 kg samples are to be processed at 5 minute intervals. The text fixture shown in Figure 1 to Appendix A shall be operated at 21 °C.

8.2.2a The standard contaminated refrigerant shall consist of liquid HFC-134a with 1300 ppm (by weight) moisture (equivalent to saturation at 38°[100 °F]), 45,000 ppm (by weight) HFC-134a compatible lubricant, and 1000 ppm (by weight) of noncondensable gases (air).

8.2.2b The HFC-134a compatible lubricant referred to in section 8.2.2a shall be a polyalkylene glycol based synthetic lubricant or equivalent, which shall contain no more than 1000 ppm by weight of moisture.

8.2.3 Following the preconditioning procedure per section 8.2.2, 18.2 kg of standard contaminated HFC-134a are to be processed by the equipment at each stable ambient temperature of 10, 21, and 49 °C.

8.2.4 The HFC-134a is to be cleaned to the purity level, as defined in SAE J2099.

9. Refrigerant Cross Contamination Test

9.1 General

9.1.1 For test validation, the equipment is to be operated according to the manufacturer's instruction.

9.1.2 The equipment shall clean the contaminated CFC-12 refrigerant to the minimum purity level as defined in Appendix A, when tested in accordance with the requirements in section 8.1.

9.1.3 The equipment shall clean the contaminated HFC-134a refrigerant to the purity

level defined in Appendix C, when tested in accordance with the requirements in section 8.2.

9.2 Test Cycle

9.2.1 The following method shall be used after the tests and requirements in Sections 8.1 and 8.2, respectively, are completed. Following the manufacturer's instructions, the equipment shall be cleared of HFC-134a, prior to beginning step A. The only refrigerant used for this is noted in steps A, C, and E of section 9.2.1. The test fixture shown in Figure 1 to Appendix A shall be used and the test shall be conducted at 10, 21, and 49 °C ambients.

A. A 1.13 kg standard contaminated sample of CFC-12 (see section 8.1.2a) shall be processed by the equipment.

B. Follow manufacturer's instructions to clear the equipment of CFC-12 before processing HFC-134a.

C. Process a 1.13 kg, standard contaminated sample of HFC-134a (see section 8.2.2a) through the equipment.

D. Follow manufacturer's instructions to clear the equipment of HFC-134a before processing CFC-12.

E. Process a 1.13 kg standard contaminated sample of CFC-12 (see section 8.1.2a) through the equipment.

F. Follow manufacturer's instructions to clear the equipment of CFC-12.

G. The amount of cross contaminated refrigerant, as determined by gas chromatography, in samples processed during steps C and E of section 9.2.1., shall not exceed 0.5 percent by weight.

10. Sample Analysis

10.1 General

10.1.1 The processed contaminated samples shall be analyzed according to the following procedure.

10.2 Quantitative Determination of Moisture

10.2.1 The recycled liquid phase sample of refrigerant shall be analyzed for moisture content via Karl Fischer coulometer titration or an equivalent method. The Karl Fischer apparatus is an instrument for precise determination of small amounts of water dissolved in liquid and/or gas samples.

10.2.2 In conducting the test, a weighed sample of 30 to 130 g is vaporized directly into the Karl Fischer anolyte. A coulometer titration is conducted and the results are calculated and displayed as parts per million moisture (weight).

10.3 Determination of Percent Lubricant

10.3.1 The amount of lubricant in the recycled sample of refrigerant/lubricant is to be determined by gravimetric analysis.

10.3.2 Following venting of noncondensable, in accordance with the manufacturer's operating instructions, the refrigerant container shall be shaken for 5 minutes prior to extracting samples for test.

10.3.3 A weighed sample of 175 to 225 g of liquid refrigerant/lubricant is allowed to evaporate at room temperature. The percent lubricant is to be calculated from the weight of the original sample and the residue remaining after the evaporation.

10.4 Noncondensable Gas

10.4.1 The amount of noncondensable gas is to be determined by gas chromatography. A sample of vaporized refrigerant liquid shall be separated and analyzed by gas chromatography. A Propak Q column at 130 °C and a hot wire detector may be used for analysis.

10.4.2 This test shall be conducted on liquid phase samples of recycled refrigerant taken from a full container as defined in 7.4 within 30 minutes following the proper venting of noncondensable gases.

10.4.3 The samples shall be shaken for at least 15 minutes prior to testing while at a temperature of 24 °C ±2.8 °C.

10.5 Refrigerant Cross Contamination

10.5.1 The amount of cross contamination of CFC-12 in HFC-134a or HFC-134a in CFC-12 shall not exceed 0.5 percent by weight as determined by gas chromatography. A sample of vaporized refrigerant liquid shall be separated and analyzed by gas chromatography. A 1% SP–1000 on Carbopack B (60/80 mesh) column may be used for the analysis.

[62 FR 68053, Dec. 30, 1997]

APPENDIX F TO SUBPART B OF PART 82—STANDARD FOR RECOVER-ONLY EQUIPMENT THAT EXTRACTS A SINGLE, SPECIFIC REFRIGERANT OTHER THAN CFC-12 OR HFC-134a

Foreword

These specifications are for equipment that recover, but does not recycle, any single, specific automotive refrigerant other than CFC-12 or HFC-134a, including a blend refrigerant.

1. Scope

The purpose of this standard is to provide equipment specifications for the recovery of any single, specific refrigerant other than CFC-12 or HFC-134a, including a blend refrigerant, which are either (1) to be returned to a refrigerant reclamation facility that will process the refrigerant to ARI Standard 700–93 or equivalent new product specifications at a minimum, or (2) to be recycled in approved refrigerant recycling equipment, or (3) to be destroyed. This standard applies to equipment used to service automobiles, light trucks, and other vehicles with similar air conditioning systems.

2. References

2.1 Applicable Documents—The following publications form a part of this specification

to the extent specified. The latest issue of SAE publications shall apply.

2.1.1 SAE Publications—Available from SAE, 400 Commonwealth Drive, Warrendale, PA 15096–0001. SAE J639—Vehicle Service Coupling. SAE J2196—Service Hoses for Automotive Air-Conditioning (fittings modified)

2.1.2 ARI Publication—Available from Air Conditioning and Refrigeration Institute, 1501 Wilson Boulevard, Sixth Floor, Arlington, VA 22209. ARI 700–93—Specifications for Fluorocarbon Refrigerants.

2.1.3 Compressed Gas Association (CGA) Publications—Available from CGA, 1235 Jefferson Davis Highway, Arlington, VA 22202. CGA Pamphlet S–1.1—Pressure Relief Device Standard Part 1—Cylinders for Compressed Gases.

2.1.4 DOT Publications—Available from the Superintendent of Documents, U.S. Government Printing Office, Washington, D.C. 20402.

DOT Standard, 49 CFR 173.304—Shippers—General Requirements for Shipments and Packagings.

2.1.5 UL Publications—Available from Underwriters Laboratories, 333 Pfingsten Road, Northbrook, IL 60062–2096.

UL 1769—Cylinder Valves.

UL 1963—Refrigerant Recovery Recycling Equipment.

3. Specifications and General Description

3.1 The equipment must be able to extract from a mobile air conditioning system the refrigerant other than CFC-12 or HFC-134a to which the equipment is dedicated.

3.2 The equipment shall be suitable for use in an automotive service garage environment as defined in section 6.8.

3.3 The equipment discharge or transfer fitting shall be unique to prevent the unintentional use of the extracted refrigerant for recharging auto air conditioners.

3.4 Equipment Certification-The equipment shall be certified by Underwriters Laboratories or an—equivalent certifying laboratory to meet this standard.

3.5 Label Requirements—The equipment shall have a label ''Designed Certified by (Company Name) to meet EPA requirements for use only with (the applicable refrigerant). The refrigerant from this equipment must be processed to ARI 700–93 specifications or equivalent new product specifications before reuse in a mobile air-conditioning system.'' The minimum letter size shall be bold type 3 mm in height.

4. Safety Requirements

4.1 The equipment must comply with applicable federal, state, and local requirements on equipment related to the handling of the applicable refrigerant material. Safety precautions or notices or labels related to the safe operation of the equipment shall also be prominently displayed on the equipment and should state ''CAUTION—SHOULD BE OPERATED BY CERTIFIED PERSONNEL.'' The safety identification shall be located on the front near the controls.

4.2 The equipment must comply with applicable safety standards for electrical and mechanical requirements.

5. Operating Instructions

5.1 The equipment manufacturer must provide operating instructions that include information equivalent to that required by SAE J1629, necessary maintenance procedures, and source information for replacement parts and repair.

5.1.1 The instruction manual shall include the following information on the lubricant removed: Only new lubricant, as identified by the system manufacturer, should be replaced in the air conditioning system. Removed lubricant from the system and/or the equipment shall be disposed on in accordance with the applicable federal, state, and local procedures and regulations.

5.2 The equipment must prominently display the manufacturer's name, address, the type of refrigerant it is designed to extract, a service telephone number, and any items that require maintenance or replacement that affect the proper operation of the equipment. Operation manuals must cover information for complete maintenance of the equipment to assure proper operation.

6.1 Functional Description

6.1 The equipment must be capable of ensuring removal of refrigerant from the system being serviced by reducing the system pressure to a minimum of 102 mm (4 in) of mercury below atmospheric pressure (*i.e.*, to a vacuum). To prevent system delayed outgassing, the unit must have a device that assures that the refrigerant has been recovered from the air-conditioning system.

6.1.1 Testing laboratory certification of the equipment capability is required which shall process contaminated refrigerant samples at specific temperatures.

6.2 The equipment must be preconditioned by processing 13.6 kg (30 lb) of the standard contaminated refrigerant at an ambient of 21 °C (70 °F) before starting the test cycle. Sample amounts are not to exceed 1.13 kg (2.5 lb) with sample amounts to be processed at 5 min. intervals. The test method fixture, depicted in Figure 1 to appendix A of this subpart, shall be operated at 21 °C (70 °F). Contaminated refrigerant samples shall be processed at ambient temperatures of 10 and 49 °C, without equipment shutting due to any safety devices employed in this equipment.

6.2.1 Standard contaminated refrigerant, 13.6 kg (30 lb) sample size, shall consist of liquid refrigerant with 1000 ppm (by weight)

moisture at 21 °C and 45,000 ppm (by weight) of oil (total of one-third mineral oil 525 suspension nominal, one-third PAG with 100 cSt viscosity at 40 °C or equivalent, and one-third POE with 68 cSt viscosity at 40 °C or equivalent) and 1000 ppm by weight of noncondensable gases (air). Refrigerant shall be identified prior to the recovery process to ±2% of the original manufacturer's formulation submitted to, and accepted by, EPA under its Significant New Alternatives Policy program, with the exception that any flammable components shall be identified to ±1%.

6.3 Portable refillable containers used in conjunction with this equipment must meet applicable DOT Standards.

6.3.1 The container color must be gray with a yellow top to identify that it contains used refrigerant. It must be permanently marked on the outside surface in black print at least 20 mm high ''DIRTY [NAME OF REFRIGERANT]—DO NOT USE, MUST BE PROCESSED''.

6.3.2 The portable refillable container shall have a unique thread connection for the specific refrigerant.

6.3.3 During operation, the equipment shall provide overfill protection to assure that the storage container liquid fill does not exceed 80% of the tank's rated volume at 21 °C per DOT Standard, 49 CFR 173.304, and the American Society of Mechanical Engineers.

6.4 Additional Storage Tank Requirements

6.4.1 The cylinder valve shall comply with UL 1769.

6.4.2 The pressure relief device shall comply with CGA Pamphlet S–1.1.

6.4.3 The container assembly shall be marked to indicate the first retest date, which shall be 5 years after date of manufacture. The marking shall indicate that retest must be performed every subsequent 5 years. The marking shall be in letters at least 6 mm high.

6.5 All flexible hoses must meet SAE J2196 for service hoses except that fittings shall be unique to the applicable refrigerant.

6.6 Service hoses must have shutoff devices located within 30 cm of the connection point to the system being serviced to minimize introduction of noncondensable gases into the recovery equipment during connection and the release of the refrigerant during disconnection.

6.7 The equipment must be able to separate the lubricant from the recovered refrigerant and accurately indicate the amount removed from the simulated automotive system during processing in 30 mL units.

6.7.1 The purpose of indicating the amount of lubricant is to ensure that a proper amount of new lubricant is returned to the mobile air conditioning system for compressor lubrication.

6.7.2 Refrigerant dissolved in this lubricant must be accounted for to prevent system lubricant overcharge of the mobile air-conditioning system.

6.8 The equipment must be capable of continuous operation in temperatures of 10 to 49 °C and must comply with 6.1 and 6.2.

7. For test validation, the equipment is to be operated according to the manufacturer's instructions.

Application

The purpose of this standard is to provide equipment specifications for the recovery of any refrigerant other than CFC-12 or HFC-134a for return to a refrigerant reclamation facility that will process it to ARI Standard 700–93 (or for recycling in other EPA approved recycling equipment, in the event that EPA in the future designates a standard for equipment capable of recycling refrigerants other than CFC-12 or HFC-134a).

Reference Section

SAE J639—Vehicle Service Coupling
SAE J2196—Service Hoses for Automotive Air-Conditioning
ARI 700–93—Specifications for Fluorocarbon Refrigerants
CGA Pamphlet S–1.1—Pressure Relief Device Standard Part 1—Cylinders for Compressed Gases
UL 1769—Cylinder Valves
49 CFR 173.304—Shippers—General Requirements for Shipment and Packagings

[62 FR 68055, Dec. 30, 1997]

Subpart C—Ban on Nonessential Products Containing Class I Substances and Ban on Nonessential Products Containing or Manufactured With Class II Substances

SOURCE: 58 FR 69675, Dec. 30, 1993, unless otherwise noted.

§ 82.60 Purpose.

The purpose of this subpart is to implement the requirements of sections 608 and 610 of the Clean Air Act as amended in 1990 on emission reductions and nonessential products.

§ 82.62 Definitions.

For purposes of this subpart:

Chlorofluorocarbon means any substance listed as Class I group I or Class I group III in 40 CFR part 82, appendix A to subpart A.

Class II Substance means any substance designated as class II in 40 CFR part 82, appendix B to subpart A.

Commercial, when used to describe the purchaser of a product, means a person that uses the product in the purchaser's business or sells it to another person and has one of the following identification numbers:

(1) A federal employer identification number;

(2) A state sales tax exemption number;

(3) A local business license number; or

(4) A government contract number.

Consumer, when used to describe a person taking action with regard to a product, means the ultimate purchaser, recipient or user of a product.

Distributor, when used to describe a person taking action with regard to a product means:

(1) The seller of a product to a consumer or another distributor; or

(2) A person who sells or distributes that product in interstate commerce for export from the United States.

Foam Insulation Product, when used to describe a product containing or consisting of plastic foam, means a product containing or consisting of the following types of foam:

(1) Closed cell rigid polyurethane foam;

(2) Closed cell rigid polystyrene boardstock foam;

(3) Closed cell rigid phenolic foam; and

(4) Closed cell rigid polyethylene foam when such foam is suitable in shape, thickness and design to be used as a product that provides thermal insulation around pipes used in heating, plumbing, refrigeration, or industrial process systems.

Hydrochlorofluorocarbon means any substance listed as class II in 40 CFR part 82, appendix B to subpart A.

Initial Inventory means that the original product has completed all of its manufacturing processes and is ready for sale by the manufacturer. Products in initial inventory may be subsequently incorporated into another product by a different manufacturer after purchase. To continue selling products after the effective date of the provisions, the manufacturer or distributor must be able to show, upon request by EPA, that the product was in fact manufactured, and thus placed into initial inventory prior to the effective date. Shipping forms, lot numbers, manufacturer date stamps or codes, invoices, or the like are normally kept records that could be maintained from the time the product was put into initial inventory and may be used to demonstrate when a product was placed in initial inventory.

Product means an item or category of items manufactured from raw or recycled materials which is used to perform a function or task.

Release means to emit into the environment during the manufacture, use, storage or disposal of a product.

Space Vehicles means a man-made device, either manned or unmanned, designed for operation beyond earth's atmosphere. This definition includes integral equipment such as models, mock-ups, prototypes, molds, jigs, tooling, hardware jackets, and test coupons. Also included is auxiliary equipment associated with test, transport, and storage, which through contamination can compromise the space vehicle performance.

[58 FR 69675, Dec. 30, 1993, as amended at 61 FR 64427, Dec. 4, 1996; 66 FR 57522, Nov. 15, 2001]

§ 82.64 Prohibitions.

(a) Effective February 16, 1993, no person may sell or distribute, or offer to sell or distribute, in interstate commerce any of the products identified as being nonessential in § 82.66(a).

(b) Effective February 16, 1993, no person may sell or distribute, or offer to sell or distribute, in interstate commerce any of the products specified in § 82.66(b) to a person who does not provide proof of being a commercial purchaser, as defined under § 82.62.

(c) Effective January 17, 1994, no person may sell or distribute, or offer to sell or distribute, in interstate commerce any of the products identified as being nonessential in § 82.66(c) or § 82.66(d) except as permitted under § 82.65(g).

(d) Except as permitted under § 82.65, effective January 1, 1994, no person may sell or distribute, or offer for sale or distribution, in interstate commerce

any product identified as being nonessential in § 82.70(a) or § 82.70(c).

(e) Except as permitted under § 82.65, effective January 1, 1994, no person may sell or distribute, or offer to sell or distribute, in interstate commerce any of the products specified in § 82.70(b) to a person who does not provide proof of being a commercial purchaser, as defined under § 82.62.

(f) Except as permitted under § 82.65(d), effective January 1, 1996, no person may sell or distribute, or offer for sale or distribution, in interstate commerce any product identified as being nonessential in § 82.70(c)(ii).

(g) It is a violation of this subpart to sell or distribute, or offer for sale or distribution, products effected by the provisions of § 82.68 if the seller knew or should have known that the purchaser was purchasing the product for a prohibited application.

§ 82.65 Temporary exemptions.

(a) Any person may sell or distribute, or offer to sell or distribute, in interstate commerce, at any time, any products specified as nonessential in § 82.70 which are manufactured and placed into initial inventory by December 31, 1993.

(b) Any person may sell or distribute, or offer to sell or distribute, in interstate commerce, at any time, any products specified as nonessential in § 82.70 which are manufactured and placed into initial inventory within the date 90 days after the effective date of any federal approvals required for product reformulation, where application for the required approval was timely and properly submitted to the approving federal agency prior to January 1, 1994.

(c)(1) Any person may sell or distribute or offer to sell or distribute, in interstate commerce, at any time, any products specified as nonessential in § 82.70 which are manufactured and placed into initial inventory within 45 days after the receipt of denial by any federal agency of an application for reformulation where initial application for the required approval was timely and properly submitted to the approving federal agency prior to January 1, 1994.

(2) If, within 45 days of receipt of a denial of an application for reformulation, a person submits a new viable application for federal approval of a reformulation, that person may continue to sell and distribute, or offer to sell and distribute until 45 days of denial of that application.

(d) Any person may sell or distribute, or offer to sell or distribute, in interstate commerce, at any time, any integral skin foam utilized to provide for motor vehicle safety in accordance with Federal Motor Vehicle Safety Standards, which are manufactured and placed into initial inventory prior to January 1, 1996.

(e) Any person selling or distributing, or offering to sell or distribute, any product specified in this section after January 1, 1994, or January 1, 1996 for paragraph (d) of this section, or after January 17, 1994 for any product specified in paragraph (g) of this section, must retain proof that such product was manufactured and placed into initial inventory before the relevant date specified in this section. Such proof may take the form of shipping forms, lot numbers, manufacturer date stamps, invoices or equivalent business records.

(f) Any person may sell or distribute, or offer to sell or distribute, in interstate commerce, any aircraft pesticide containing class I until an alternative aircraft pesticide containing class II is available in interstate commerce.

(g) Any person may sell or distribute, or offer to sell or distribute, in interstate commerce, at any time, any replacement part that was manufactured with, or contains a class I substance or was packaged in material that was manufactured with or contains a class I substance only if:

(1) The replacement part was manufactured for use in a single model of a product; and

(2) The replacement part and product model are no longer manufactured; and

(3) The replacement part was placed into initial inventory prior to April 16, 1992.

(h) Any person may sell or distribute, or offer to sell or distribute, in interstate commerce, at any time, any air-conditioning or refrigeration products specified as nonessential in § 82.66(e) that are manufactured and placed into initial inventory by January 14, 2002.

(i) Any person may sell or distribute, or offer to sell or distribute, in interstate commerce, at any time, any integral skin foam products manufactured with a Class I substance for use in commercial aviation and specified as nonessential in § 82.66(c) that are manufactured and placed into initial inventory by January 14, 2002.

[58 FR 69675, Dec. 30, 1993, as amended at 66 FR 57522, Nov. 15, 2001]

§ 82.66 Nonessential Class I products and exceptions.

The following products which release a Class I substance (as defined in 40 CFR part 82, appendix A to subpart A) are identified as being nonessential, and subject to the prohibitions specified under § 82.64—

(a) Any plastic party streamer or noise horn which is propelled by a chlorofluorocarbon, including but not limited to—

(1) String confetti;

(2) Marine safety horns;

(3) Sporting event horns;

(4) Personal safety horns;

(5) Wall-mounted alarms used in factories or other work areas; and

(6) Intruder alarms used in homes or cars.

(b) Any cleaning fluid for electronic and photographic equipment which contains a chlorofluorocarbon:

(1) Including but not limited to liquid packaging, solvent wipes, solvent sprays, and gas sprays; and

(2) Except for those sold or distributed to a commercial purchaser.

(c) Any plastic foam product which is manufactured with or contains a Class I substance; except any plastic foam product blown with CFC-11, but which contains no other Class I substances and where this product is used to provide thermal protection to external tanks for space vehicles;

(d) Any aerosol product or other pressurized dispenser, other than those banned in § 82.64(a) or § 82.64(b), which contains a chlorofluorocarbon,

(1) Including but not limited to household, industrial, automotive and pesticide uses,

(2) Except—

(i) Medical devices listed in 21 CFR 2.125(e);

(ii) Lubricants, coatings or cleaning fluids for electrical or electronic equipment, which contain CFC-11, CFC-12, or CFC-113 for solvent purposes, but which contain no other CFCs;

(iii) Lubricants, coatings or cleaning fluids used for aircraft maintenance, which contain CFC-11 or CFC-113 as a solvent, but which contain no other CFCs;

(iv) Mold release agents used in the production of plastic and elastomeric materials, which contain CFC-11 or CFC-113 as a solvent, but which contain no other CFCs, and/or mold release agents that contain CFC-12 as a propellant, but which contain no other CFCs;

(v) Spinnerette lubricant/cleaning sprays used in the production of synthetic fibers, which contain CFC-114 as a solvent, but which contain no other CFCs, and/or spinnerette lubricant/cleaning sprays which contain CFC-12 as a propellant, but which contain no other CFCs;

(vi) Document preservation sprays which contain CFC-113 as a solvent, but which contain no other CFCs, and/or document preservation sprays which contain CFC-12 as a propellant, but which contain no other CFCs, and which are used solely on thick books, books with coated or dense paper and tightly bound documents; and

(e) Any air-conditioning or refrigeration appliance as defined in CAA 601(l) that contains a Class I substance used as a refrigerant.

[58 FR 69675, Dec. 30, 1993, as amended at 66 FR 57522, Nov. 15, 2001]

§ 82.68 Verification and public notice requirements.

(a) Effective February 16, 1993, any person who sells or distributes any cleaning fluid for electronic and photographic equipment which contains a chlorofluorocarbon must verify that the purchaser is a commercial entity as defined in § 82.62. In order to verify that the purchaser is a commercial entity, the person who sells or distributes this product must request documentation that proves the purchaser's commercial status by containing one or more of the commercial identification

numbers specified in § 82.62(b). The seller or distributor must have a reasonable basis for believing that the information presented by the purchaser is accurate.

(b) Effective February 16, 1993, any person who sells or distributes any cleaning fluid for electronic and photographic equipment which contains a chlorofluorocarbon must prominently display a sign where sales of such product occur which states: ''It is a violation of federal law to sell, distribute, or offer to sell or distribute, any chlorofluorocarbon-containing cleaning fluid for electronic and photographic equipment to anyone who is not a commercial user of this product. The penalty for violating this prohibition can be up to $25,000 per sale. Individuals purchasing such products must present proof of their commercial status in accordance with § 82.68(a).''

(c) Effective January 1, 1994, any person who sells or distributes any aerosol or pressurized dispenser of cleaning fluid for electronic and photographic equipment which contains a class II substance must verify that the purchaser is a commercial entity as defined in § 82.62(b). In order to verify that the purchaser is a commercial entity, the person who sells or distributes this product must request documentation that proves the purchaser's commercial status by containing one or more of the commercial identification numbers specified in § 82.62(b).

(d) Effective January 1, 1994, any person who sells or distributes any aerosol or other pressurized dispenser of cleaning fluid for electronic and photographic equipment which contains a class II substance must prominently display a sign where sales of such product occur which states: ''It is a violation of federal law to sell, distribute, or offer to sell or distribute, any aerosol hydrochlorofluorocarbon-containing cleaning fluid for electronic and photographic equipment to anyone who is not a commercial user of this product. The penalty for violating this prohibition can be up to $25,000 per unit sold. Individuals purchasing such products must present proof of their commercial status in accordance with § 82.68(c).''

(e) Effective January 1, 1994, in order to satisfy the requirements under § 82.68 (b) and (d), any person who sells or distributes cleaning fluids for electronic and photographic equipment which contain a class I substance and those aerosol or pressurized dispensers of cleaning fluids which contain a class II substance, may prominently display one sign where sales of such products occur which states: ''It is a violation of federal law to sell, distribute, or offer to sell or distribute, any chlorofluorocarbon-containing cleaning fluid for electronic and photographic equipment or aerosol hydrochlorofluorocarbon-containing cleaning fluid for electronic and photographic equipment to anyone who is not a commercial user of this product. The penalty for violating this prohibition can be up to $25,000 per unit sold. Individuals purchasing such products must present proof of their commercial status in accordance with 40 CFR 82.68(a) or 82.68(c).''

(f)–(g) [Reserved]

(h) Effective January 1, 1994, any person who sells or distributes any mold release agents containing a class II substance as a propellant must provide written notification to the purchaser prior to the sale that ''It is a violation of federal law to sell mold release agents containing hydrochlorofluorocarbons as propellants to anyone, except for use in applications where no other alternative except a class I substance is available. The penalty for violating this prohibition can be up to $25,000 per unit sold.'' Written notification may be placed on sales brochures, order forms, invoices and the like.

(i) Effective January 1, 1994, any person who sells or distributes any wasp and hornet spray containing a class II substance must provide written notification to the purchaser prior to the sale that ''it is a violation of federal law to sell or distribute wasp and hornet sprays containing hydrochlorofluorocarbons as solvents to anyone, except for use near high-tension power lines where no other alternative except a class I substance is available. The penalty for violating this prohibition can be up to $25,000 per unit sold.'' Written notification may be

placed on sales brochures, order forms, invoices and the like.

[58 FR 69675, Dec. 30, 1993, as amended at 61 FR 64427, Dec. 4, 1996]

§ 82.70 Nonessential Class II products and exceptions.

The following products which release a class II substance (as designated as class II in 40 CFR part 82, appendix B to subpart A) are identified as being nonessential and the sale or distribution of such products is prohibited under § 82.64 (d), (e), or (f)—

(a) Any aerosol product or other pressurized dispenser which contains a class II substance:

(1) Including but not limited to household, industrial, automotive and pesticide uses;

(2) Except—

(i) Medical devices listed in 21 CFR 2.125(e);

(ii) Lubricants, coatings or cleaning fluids for electrical or electronic equipment, which contain class II substances for solvent purposes, but which contain no other class II substances;

(iii) Lubricants, coatings or cleaning fluids used for aircraft maintenance, which contain class II substances for solvent purposes but which contain no other class II substances;

(iv) Mold release agents used in the production of plastic and elastomeric materials, which contain class II substances for solvent purposes but which contain no other class II substances, and/or mold release agents that contain HCFC-22 as a propellant where evidence of good faith efforts to secure alternatives indicates that, other than a class I substance, there are no suitable alternatives;

(v) Spinnerette lubricants/cleaning sprays used in the production of synthetic fibers, which contain class II substances for solvent purposes and/or contain class II substances for propellant purposes;

(vi) Document preservation sprays which contain HCFC-141b as a solvent, but which contain no other class II substance; and/or which contain HCFC-22 as a propellant, but which contain no other class II substance and which are used solely on thick books, books with coated, dense or paper and tightly bound documents;

(vii) Portable fire extinguishing equipment used for non-residential applications; and

(viii) Wasp and hornet sprays for use near high-tension power lines that contain a class II substance for solvent purposes only, but which contain no other class II substances.

(b) Any aerosol or pressurized dispenser cleaning fluid for electronic and photographic equipment which contains a class II substance, except for those sold or distributed to a commercial purchaser.

(c) Any plastic foam product which contains, or is manufactured with, a class II substance,

(1) Including but not limited to household, industrial, automotive and pesticide uses,

(2) Except—

(i) Any foam insulation product, as defined in § 82.62(h); and

(ii) Integral skin foam utilized to provide for motor vehicle safety in accordance with Federal Motor Vehicle Safety Standards until January 1, 1996, after which date such products are identified as nonessential and may only be sold or distributed or offered for sale or distribution in interstate commerce in accordance with § 82.65(d).

[58 FR 69675, Dec. 30, 1993, as amended at 61 FR 64427, Dec. 4, 1996]

Subpart D—Federal Procurement

SOURCE: 58 FR 54898, Oct. 22, 1993, unless otherwise noted.

§ 82.80 Purpose and scope.

(a) The purpose of this subpart is to require Federal departments, agencies, and instrumentalities to adopt procurement regulations which conform to the policies and requirements of title VI of the Clean Air Act as amended, and which maximize the substitution in Federal procurement of safe alternatives, as identified under section 612 of the Clean Air Act, for class I and class II substances.

(b) The regulations in this subpart apply to each department, agency, and instrumentality of the United States.

§ 82.82 Definitions.

(a) *Class I substance* means any substance designated as class I by EPA pursuant to 42 U.S.C. 7671(a), including but not limited to chlorofluorocarbons, halons, carbon tetrachloride and methyl chloroform.

(b) *Class II substance* means any substance designated as class II by EPA pursuant to 42 U.S.C. 7671(a), including but not limited to hydrochlorofluorocarbons.

(c) *Controlled substance* means a class I or class II ozone-depleting substance.

(d) *Department, agency and instrumentality of the United States* refers to any executive department, military department, or independent establishment within the meaning of 5 U.S.C. 101, 102, and 104(1), respectively, any wholly owned Government corporation, the United States Postal Service and Postal Rate Commission, and all parts of and establishments within the legislative and judicial branches of the United States.

§ 82.84 Requirements.

(a) No later than October 24, 1994, each department, agency and instrumentality of the United States shall conform its procurement regulations to the requirements and policies of title VI of the Clean Air Act, 42 U.S.C. 7671–7671g. Each such regulation shall provide, at a minimum, the following:

(1) That in place of class I or class II substances, or of products made with or containing such substances, safe alternatives identified under 42 U.S.C. 7671k (or products made with or containing such alternatives) shall be substituted to the maximum extent practicable. Substitution is not required for class II substances identified as safe alternatives under 42 U.S.C. 7671k, or for products made with or containing such substances, and such substances may be used as substitutes for other class I or class II substances.

(2) That, consistent with the phase-out schedules for ozone-depleting substances, no purchases shall be made of class II substances, or products containing class II substances, for the purpose of any use prohibited under 42 U.S.C. 7671d(c);

(3) That all active or new contracts involving the performance of any service or activity subject to 42 U.S.C. 7671g or 7671h or regulations promulgated thereunder include, or be modified to include, a condition requiring the contractor to ensure compliance with all requirements of those sections and regulations;

(4) That no purchases shall be made of products whose sale is prohibited under 42 U.S.C. 7671h, except when they will be used by persons certified under section 609 to service vehicles, and no purchase shall be made of nonessential products as defined under 42 U.S.C. 7671i;

(5) That proper labeling under 42 U.S.C. 7671j shall be a specification for the purchase of any product subject to that section.

(b) For agencies subject to the Federal Acquisition Regulation, 48 CFR part 1, amendment of the FAR, consistent with this subpart, shall satisfy the requirement of this section.

§ 82.86 Reporting requirements.

(a) No later than one year after October 22, 1993, each agency, department, and instrumentality of the United States shall certify to the Office of Management and Budget that its procurement regulations have been amended in accordance with this section.

(b) Certification by the General Services Administration that the Federal Acquisition Regulation has been amended in accordance with this section shall constitute adequate certification for purposes of all agencies subject to the Federal Acquisition Regulation.

Subpart E—The Labeling of Products Using Ozone-Depleting Substances

SOURCE: 60 FR 4020, Jan. 19, 1995, unless otherwise noted.

§ 82.100 Purpose.

The purpose of this subpart is to require warning statements on containers of, and products containing or manufactured with, certain ozone-depleting substances, pursuant to section 611 of the Clean Air Act, as amended.

§ 82.102 Applicability.

(a) In the case of substances designated as class I or class II substances as of February 11, 1993, the applicable date of the requirements in this paragraph (a) is May 15, 1993. In the case of any substance designated as a class I or class II substance after February 11, 1993, the applicable date of the requirements in this paragraph (a) is one year after the designation of such substance as a class I or class II substance unless otherwise specified in the designation. On the applicable date indicated in this paragraph (a), the requirements of this subpart shall apply to the following containers and products except as exempted under paragraph (c) of this section:

(1) All containers in which a class I or class II substance is stored or transported.

(2) All products containing a class I substance.

(3) All products directly manufactured with a process that uses a class I substance, unless otherwise exempted by this subpart or, unless the Administrator determines for a particular product that there are no substitute products or manufacturing processes for such product that do not rely on the use of a class I substance, that reduce overall risk to human health and the environment, and that are currently or potentially available. If the Administrator makes such a determination for a particular product, then the requirements of this subpart are effective for such product no later than January 1, 2015.

(b) Applicable January 1, 2015 in any case, or one year after any determination between May 15, 1993 and January 1, 2015, by the Administrator for a particular product that there are substitute products or manufacturing processes for such product that do not rely on the use of a class I or class II substance, that reduce the overall risk to human health and the environment, and that are currently or potentially available, the requirements of this subpart shall apply to the following:

(1) All products containing a class II substance.

(2) All products manufactured with a process that uses a class II substance.

(c) The requirements of this subpart shall not apply to products manufactured prior to May 15, 1993, provided that the manufacturer submits documentation to EPA upon request showing that the product was manufactured prior to that date.

§ 82.104 Definitions.

(a) *Class I substance* means any substance designated as class I in 40 CFR part 82, appendix A to subpart A, including chlorofluorocarbons, halons, carbon tetrachloride and methyl chloroform and any other substance so designated by the Agency at a later date.

(b) *Class II substance* means any substance designated as class II in 40 CFR part 82, appendix A to subpart A, including hydrochlorofluorocarbons and any other substance so designated by the Agency at a later date.

(c) *Completely destroy* means to cause the destruction of a controlled substance by one of the five destruction processes approved by the Parties at a demonstrable destruction efficiency of 98 percent or more or a greater destruction efficiency if required under other applicable federal regulations.

(d) *Consumer* means a commercial or non-commercial purchaser of a product or container that has been introduced into interstate commerce.

(e) *Container* means the immediate vessel in which a controlled substance is stored or transported.

(f) *Container containing* means a container that physically holds a controlled substance within its structure that is intended to be transferred to another container, vessel or piece of equipment in order to realize its intended use.

(g) *Controlled substance* means a class I or class II ozone-depleting substance.

(h) *Destruction means* the expiration of a controlled substance, that does not result in a commercially useful end product using one of the following controlled processes in a manner that complies at a minimum with the ''Code of Good Housekeeping'' of Chapter 5.5 of the United Nations Environment Programme (UNEP) report entitled, *Ad-Hoc Technical Advisory Committee on ODS Destruction Technologies*, as well as

the whole of Chapter 5 from that report, or with more stringent requirements as applicable. The report is available from the Environmental Protection Agency, Public Docket A–91–60, 401 M Street, SW., Washington, DC 20460 The controlled processes are:

(1) Liquid injection incineration;

(2) Reactor cracking;

(3) Gaseous/fume oxidation;

(4) Rotary kiln incineration; or

(5) Cement kiln.

(i) *Distributor* means a person to whom a product is delivered or sold for purposes of subsequent resale, delivery or export.

(j) *Export* means the transport of virgin, used, or recycled class I or class II substances or products manufactured or containing class I or class II substances from inside the United States or its territories to persons outside the United States or its territories, excluding United States military bases and ships for on-board use.

(k) *Exporter* means the person who contracts to sell class I or class II substances or products manufactured with or containing class I or class II substances for export or transfers such substances or products to his affiliate in another country.

(l) *Import* means to land on, bring into, or introduce into, or attempt to land on, bring into, or introduce into any place subject to the jurisdiction of the United States whether or not such landing, bringing, or introduction constitutes an importation within the meaning of the customs laws of the United States, with the exception of temporary off-loading of products manufactured with or containers containing class I or class II substances from a ship are used for servicing of that ship.

(m) *Importer* means any person who imports a controlled substance, a product containing a controlled substance, a product manufactured with a controlled substance, or any other chemical substance (including a chemical substance shipped as part of a mixture or article), into the United States. ''Importer'' includes the person primarily liable for the payment of any duties on the merchandise or an authorized agent acting on his or her behalf. The term also includes, as appropriate:

(1) The consignee;

(2) The importer of record listed on U.S. Customs Service forms for the import;

(3) The actual owner if an actual owner's declaration and superseding bond has been filed; or

(4) The transferee, if the right to draw merchandise in a bonded warehouse has been transferred.

(n) *Interstate commerce* means the distribution or transportation of any product between one state, territory, possession or the District of Columbia, and another state, territory, possession or the District of Columbia, or the sale, use or manufacture of any product in more than one state, territory, possession or District of Columbia. The entry points for which a product is introduced into interstate commerce are the release of a product from the facility in which the product was manufactured, the entry into a warehouse from which the domestic manufacturer releases the product for sale or distribution, and at the site of United States Customs clearance.

(o) *Manufactured with a controlled substance* means that the manufacturer of the product itself used a controlled substance directly in the product's manufacturing, but the product itself does not contain more than trace quantities of the controlled substance at the point of introduction into interstate commerce. The following situations are excluded from the meaning of the phrase ''manufactured with'' a controlled substance:

(1) Where a product has not had physical contact with the controlled substance;

(2) Where the manufacturing equipment or the product has had physical contact with a controlled substance in an intermittent manner, not as a routine part of the direct manufacturing process;

(3) Where the controlled substance has been transformed, except for trace quantities; or

(4) Where the controlled substance has been completely destroyed.

(p) *Potentially available* means that adequate information exists to make a determination that the substitute is

technologically feasible, environmentally acceptable and economically viable.

(q) *Principal display panel (PDP)* means the entire portion of the surface of a product, container or its outer packaging that is most likely to be displayed, shown, presented, or examined under customary conditions of retail sale. The area of the PDP is not limited to the portion of the surface covered with existing labeling; rather it includes the entire surface, excluding flanges, shoulders, handles, or necks.

(r) *Product* means an item or category of items manufactured from raw or recycled materials, or other products, which is used to perform a function or task.

(s) *Product containing* means a product including, but not limited to, containers, vessels, or pieces of equipment, that physically holds a controlled substance at the point of sale to the ultimate consumer which remains within the product.

(t) *Promotional printed material* means any informational or advertising material (including, but not limited to, written advertisements, brochures, circulars, desk references and fact sheets) that is prepared by the manufacturer for display or promotion concerning a product or container, and that does not accompany the product to the consumer.

(u) *Retailer* means a person to whom a product is delivered or sold, if such delivery or sale is for purposes of sale or distribution in commerce to consumers who buy such product for purposes other than resale.

(v) *Spare parts* means those parts that are supplied by a manufacturer to another manufacturer, distributor, or retailer, for purposes of replacing similar parts with such parts in the repair of a product.

(w) *Supplemental printed material* means any informational material (including, but not limited to, package inserts, fact sheets, invoices, material safety data sheets, procurement and specification sheets, or other material) which accompanies a product or container to the consumer at the time of purchase.

(x) *Transform* means to use and entirely consume a class I or class II substance, except for trace quantities, by changing it into one or more substances not subject to this subpart in the manufacturing process of a product or chemical.

(y) *Type size* means the actual height of the printed image of each capital letter as it appears on a label.

(z) *Ultimate consumer* means the first commercial or non-commercial purchaser of a container or product that is not intended for re-introduction into interstate commerce as a final product or as part of another product.

(aa) *Warning label* means the warning statement required by section 611 of the Act. The term warning statement shall be synonymous with warning label for purposes of this subpart.

(bb) *Waste* means, for purposes of this subpart, items or substances that are discarded with the intent that such items or substances will serve no further useful purpose.

(cc) *Wholesaler* means a person to whom a product is delivered or sold, if such delivery or sale is for purposes of sale or distribution to retailers who buy such product for purposes of resale.

§ 82.106 Warning statement requirements.

(a) *Required warning statements.* Unless otherwise exempted by this subpart, each container or product identified in § 82.102 (a) or (b) shall bear the following warning statement, meeting the requirements of this subpart for placement and form:

WARNING: Contains [or Manufactured with, if applicable] [*insert name of substance*], a substance which harms public health and environment by destroying ozone in the upper atmosphere.

(b) *Exemptions from warning label requirement.* The following products need not bear a warning label:

(1) Products containing trace quantities of a controlled substance remaining as a residue or impurity due to a chemical reaction, and where the controlled substance serves no useful purpose in or for the product itself. However, if such product was manufactured using the controlled substance, the product is required to be labeled as a ''product manufactured with'' the controlled substance, unless otherwise exempted;

(2) Containers containing a controlled substance in which trace quantities of that controlled substance remain as a residue or impurity;

(3) Waste containing controlled substances or blends of controlled substances bound for discard;

(4) Products manufactured using methyl chloroform or CFC-113 by persons who can demonstrate and certify a 95% reduction in overall usage from their 1990 calendar year usage of methyl chloroform or CFC-113 as solvents during a twelve (12) month period ending within sixty (60) days of such certification or during the most recently completed calendar year. In calculating such reduction, persons may subtract from quantities used those quantities for which they possess accessible data that establishes the amount of methyl chloroform or CFC-113 transformed. Such subtraction must be performed for both the applicable twelve month period and the 1990 calendar year. If at any time future usage exceeds the 95% reduction, all products manufactured with methyl chloroform or CFC-113 as solvents by that person must be labeled immediately. No person may qualify for this exemption after May 15, 1994;

(5) Products intended only for export outside of the United States shall not be considered ''products introduced into interstate commerce'' provided such products are clearly designated as intended for export only;

(6) Products that are otherwise not subject to the requirements of this subpart that are being repaired, using a process that uses a controlled substance.

(7) Products, processes, or substitute chemicals undergoing research and development, by which a controlled substance is used. Such products must be labeled when they are introduced into interstate commerce.

(c) *Interference with other required labeling information.* The warning statement shall not interfere with, detract from, or mar any labeling information required on the labeling by federal or state law.

§ 82.108 Placement of warning statement.

The warning statement shall be placed so as to satisfy the requirement of the Act that the warning statement be ''clearly legible and conspicuous.'' The warning statement is clearly legible and conspicuous if it appears with such prominence and conspicuousness as to render it likely to be read and understood by consumers under normal conditions of purchase. Such placement includes, but is not limited to, the following:

(a) *Display panel placement.* For any affected product or container that has a display panel that is normally viewed by the purchaser at the time of the purchase, the warning statement described in § 82.106 may appear on any such display panel of the affected product or container such that it is ''clearly legible and conspicuous'' at the time of the purchase. If the warning statement appears on the principal display panel or outer packaging of any such affected product or container, the warning statement shall qualify as ''clearly legible and conspicuous,'' as long as the label also fulfills all other requirements of this subpart and is not obscured by any outer packaging, as required by paragraph (b) of this section. The warning statement need not appear on such display panel if either:

(1) The warning statement appears on the outer packaging of the product or container, consistent with paragraph (b) of this section, and is clearly legible and conspicuous; or

(2) The warning statement is placed in a manner consistent with paragraph (c) of this section.

(b) *Outer packaging.* If the product or container is normally packaged, wrapped, or otherwise covered when viewed by the purchaser at the time of the purchase the warning statement described in § 82.106 shall appear on any outer packaging, wrapping or other covering used in the retail display of the product or container, such that the warning statement is clearly legible and conspicuous at the time of the purchase. If the outer packaging has a display panel that is normally viewed by

the purchaser at the time of the purchase, the warning statement shall appear on such display panel. If the warning statement so appears on such product's or container's outer packaging, it need not appear on the surface of the product or container, as long as the statement also fulfills all other requirements of this subpart. The warning statement need not appear on such outer packaging if either:

(1) The warning statement appears on the surface of the product or container, consistent with paragraph (a) of this section, and is clearly legible and conspicuous through any outer packaging, wrapping or other covering used in display; or

(2) The warning statement is placed in a manner consistent with paragraph (c) of this section.

(c) *Alternative placement.* The warning statement may be placed on a hang tag, tape, card, sticker, invoice, bill of lading, supplemental printed material, or similar overlabeling that is securely attached to the container, product, outer packaging or display case, or accompanies the product containing or manufactured with a controlled substance or a container containing class I or class II substances through its sale to the consumer or ultimate consumer. For prescription medical products that have been found to be essential for patient health by the Food and Drug Administration, the warning statement may be placed in supplemental printed material intended to be read by the prescribing physician, as long as the following statement is placed on the product, its packaging, or supplemental printed material intended to be read by the patient: ''This product contains [insert name of substance], a substance which harms the environment by depleting ozone in the upper atmosphere.'' In any case, the warning statement must be clearly legible and conspicuous at the time of the purchase.

(d) *Products not viewed by the purchaser at the time of purchase.* Where the purchaser of a product cannot view a product, its packaging or alternative labeling such that the warning statement is clearly legible and conspicuous at the time of purchase, as specified under paragraphs (a), (b), or (c) of this section, the warning statement may be placed in the following manner:

(1) Where promotional printed material is prepared for display or distribution, the warning statement may be placed on such promotional printed material such that it is clearly legible and conspicuous at the time of purchase; or

(2) The warning statement may be placed on the product, on its outer packaging, or on alternative labeling, consistent with paragraphs (a), (b), or (c) of this section, such that the warning statement is clearly legible and conspicuous at the time of product delivery, if the product may be returned by the purchaser at or after the time of delivery or if the purchase is not complete until the time of delivery (e.g., products delivered C.O.D.).

§ 82.110 Form of label bearing warning statement.

(a) *Conspicuousness and contrast.* The warning statement shall appear in conspicuous and legible type by typography, layout, and color with other printed matter on the label. The warning statement shall appear in sharp contrast to any background upon which it appears. Examples of combinations of colors which may not satisfy the proposed requirement for sharp contrast are: black letters on a dark blue or dark green background, dark red letters on a light red background, light red letters on a reflective silver background, and white letters on a light gray or tan background.

(b) *Name of substance.* The name of the class I or class II substance to be inserted into the warning statement shall be the standard chemical name of the substance as listed in 40 CFR part 82, appendix A to subpart A, except that:

(1) The acronym ''CFC'' may be substituted for ''chlorofluorocarbon.''

(2) The acronym ''HCFC'' may be substituted for ''hydrochlorofluorocarbon.''

(3) The term ''1,1,1-trichloroethane'' may be substituted for ''methyl chloroform.''

(c) *Combined statement for multiple class I substances.* If a container containing or a product contains or is manufactured with, more than one

class I or class II substance, the warning statement may include the names of all of the substances in a single warning statement, provided that the combined statement clearly distinguishes which substances the container or product contains and which were used in the manufacturing process.

(d) *Format*. (1) The warning statement shall be blocked within a square or rectangular area, with or without a border. (2) The warning statement shall appear in lines that are parallel to the surrounding text on the product's PDP, display panel, supplemental printed material or promotional printed material.

(e) *Type style*. The ratio of the height of a capital letter to its width shall be such that the height of the letter is no more than 3 times its width; the signal word ''WARNING'' shall appear in all capital letters.

(f) *Type size*. The warning statement shall appear at least as large as the type sizes prescribed by this paragraph. The type size refers to the height of the capital letters. A larger type size materially enhances the legibility of the statement and is desirable.

(1) *Display panel or outer packaging*. Minimum type size requirements for the warning statement are given in Table 1 to this paragraph and are based upon the area of the display panel of the product or container. Where the statement is on outer packaging, as well as the display panel area, the statement shall appear in the same minimum type size as on the display panel.

TABLE 1 TO § 82.110(F)(1)

	Area of display panel (sq. in.)					
	0–2	>2–5	>5–10	>10–15	>15–30	>30
Type size (in.)[1]						
Signal word	3/64	1/16	3/32	7/64	1/8	5/32
Statement	3/64	3/64	1/16	3/32	3/32	7/64

> Means greater than.
[1] Minimum height of printed image of letters.

(2) *Alternative placement*. The minimum type size for the warning statement on any alternative placement which meets the requirements of § 82.108(c) is 3/32 inches for the signal word and 1/16 of an inch for the statement.

(3) *Promotional printed material*. The minimum type size for the warning statement on promotional printed material is 3/32 inches for the signal word and 1/16 of an inch for the statement, or the type size of any surrounding text, whichever is larger.

§ 82.112 Removal of label bearing warning statement.

(a) *Prohibition on removal*. Except as described in paragraph (b) or (c) of this section, any warning statement that accompanies a product or container introduced into interstate commerce, as required by this subpart, must remain with the product or container and any product incorporating such product or container, up to and including the point of sale to the ultimate consumer.

(b) *Incorporation of warning statement by subsequent manufacturers*. A manufacturer of a product that incorporates a product that is accompanied by a label bearing the warning statement may remove such label from the incorporated product if the information on such label is incorporated into a warning statement accompanying the manufacturer's product, or if, pursuant to paragraph (c) of this section, the manufacturer of the product is not required to pass through the information contained on or incorporated in the product's label.

(c) *Manufacturers that incorporate products manufactured with controlled substances*. A manufacturer that incorporates into its own product a component product that was purchased from another manufacturer, was manufactured with a process that uses a controlled substance(s), but does not contain such substance(s), may remove such label from the incorporated product and need not apply a warning statement to its own product, if the

manufacturer does not use a controlled substance in its own manufacturing process. A manufacturer that uses controlled substances in its own manufacturing process, and is otherwise subject to the regulations of this subpart, must label pursuant to § 82.106, but need not include information regrading the incorporated product on the required label.

(d) *Manufacturers, distributors, wholesalers, retailers that sell spare parts manufactured with controlled substances solely for repair.* Manufacturers, distributors, wholesalers, and retailers that purchase spare parts manufactured with a class I substance from another manufacturer or supplier, and sell such spare parts for the sole purpose of repair, are not required to pass through an applicable warning label if such products are removed from the original packaging provided by the manufacturer from whom the products are purchased. Manufacturers of the spare parts manufactured with controlled substances must still label their products; furthermore, manufacturers, importers, and distributors of such products must pass through the labeling information as long as products remain assembled and packaged in the manner assembled and packaged by the original manufacturer. This exemption shall not apply if a spare part is later used for manufacture and/or for purposes other than repair.

§ 82.114 Compliance by manufacturers and importers with requirements for labeling of containers of controlled substances, or products containing controlled substances.

(a) *Compliance by manufacturers and importers with requirements for labeling of containers of controlled substances, or products containing controlled substances.* Each manufacturer of a product incorporating another product or container containing a controlled substance, to which § 82.102 (a)(1), or, (a)(2) or (b)(1) applies, that is purchased or obtained from another manufacturer or supplier, is required to pass through and incorporate the labeling information that accompanies such incorporated product in a warning statement accompanying the manufacturer's finished product. Each importer of a product, or container containing a controlled substance, to which § 82.102 (a)(1), (a)(2), or (b)(1) applies, including a component product or container incorporated into the product, that is purchased from a foreign manufacturer or supplier, is required to apply a label, or to ensure that a label has been properly applied, at the site of U.S. Customs clearance.

(b) *Reliance on reasonable belief.* The manufacturer or importer of a product that incorporates another product container from another manufacturer or supplier may rely on the labeling information (or lack thereof) that it receives with the product, and is not required to independently investigate whether the requirements of this subpart are applicable to such purchased product or container, as long as the manufacturer reasonably believes that the supplier or foreign manufacturer is reliably and accurately complying with the requirements of this subpart.

(c) *Contractual obligations.* A manufacturer's or importer's contractual relationship with its supplier under which the supplier is required to accurately label, consistent with the requirements of this subpart, any products containing a controlled substance or containers of a controlled substance that are supplied to the manufacturer or importer, is evidence of reasonable belief.

§ 82.116 Compliance by manufacturers or importers incorporating products manufactured with controlled substances.

(a) *Compliance by manufacturers or importers incorporating products manufactured with controlled substances, or importing products manufactured with controlled substances.* Each manufacturer or importer of a product incorporating another product to which § 82.102 (a)(3) or (b)(2) applies, that is purchased from another manufacturer or supplier, is not required to pass through and incorporate the labeling information that accompanies such incorporated product in a warning statement accompanying the manufacturer's or importer's finished product. Importers of products to which § 82.102 (a)(3) or (b)(2) applies are required to apply a label, or to ensure that a label has been properly applied at the site of U.S. Customs clearance.

(b) *Reliance on reasonable belief.* The importer of a product purchased or obtained from a foreign manufacturer or supplier, which product may have been manufactured with a controlled substance, may rely on the information that it receives with the purchased product, and is not required to independently investigate whether the requirements of this subpart are applicable to the purchased or obtained product, as long as the importer reasonably believes that there was no use of controlled substances by the final manufacturer of the product being imported.

(c) *Contractual obligations.* An importer's contractual relationship with its supplier under which the supplier is required to accurately label, consistent with the requirements of this subpart, any products manufactured with a controlled substance that are supplied to the importer, or to certify to the importer whether a product was or was not manufactured with a controlled substance is evidence of reasonable belief.

§ 82.118 Compliance by wholesalers, distributors and retailers.

(a) *Requirement of compliance by wholesalers, distributors and retailers.* All wholesalers, distributors and retailers of products or containers to which this subpart applies are required to pass through the labeling information that accompanies the product, except those purchasing from other manufacturers or suppliers spare parts manufactured with controlled substances and selling those parts for the demonstrable sole purpose of repair.

(b) *Reliance on reasonable belief.* The wholesaler, distributor or retailer of a product may rely on the labeling information that it receives with the product or container, and is not required to independently investigate whether the requirements of this subpart are applicable to the product or container, as long as the wholesaler, distributor or retailer reasonably believes that the supplier of the product or container is reliably and accurately complying with the requirements of this subpart.

(c) *Contractual obligations.* A wholesaler, distributor or retailer's contractual relationship with its supplier under which the supplier is required to accurately label, consistent with the requirements of this subpart, any products manufactured with a controlled substance that are supplied to the wholesaler, distributor or retailer is evidence of reasonable belief.

§ 82.120 Petitions.

(a) *Requirements for procedure and timing.* Persons seeking to apply the requirements of this regulation to a product containing a class II substance or a product manufactured with a class I or a class II substance which is not otherwise subject to the requirements, or to temporarily exempt a product manufactured with a class I substance, based on a showing of a lack of currently or potentially available alternatives, from the requirements of this regulation may submit petitions to: Labeling Program Manager, Stratospheric Protection Division, Office of Atmospheric Programs, U.S. Environmental Protection Agency, 6202–J, 1200 Pennsylvania Ave., NW., Washington, DC 20460. Such persons must label their products while such petitions are under review by the Agency.

(b) *Requirement for adequate data.* Any petition submitted under paragraph (a) of this section shall be accompanied by adequate data, as defined in § 82.120(c). If adequate data are not included by the petitioner, the Agency may return the petition and request specific additional information.

(c) *Adequate data.* A petition shall be considered by the Agency to be supported by adequate data if it includes all of the following:

(1) A part clearly labeled ''Section I.A.'' which contains the petitioner's full name, company or organization name, address and telephone number, the product that is the subject of the petition, and, in the case of a petition to temporarily exempt a product manufactured with a class I substance from the labeling requirement, the manufacturer or manufacturers of that product.

(2) For petitions to temporarily exempt a product manufactured with a class I substance only, a part clearly labeled ''Section I.A.T.'' which states the length of time for which an exemption is requested.

(3) A part clearly labeled ''Section I.B.'' which includes the following

statement, signed by the petitioner or an authorized representative:

''I certify under penalty of law that I have personally examined and am familiar with the information submitted in this petition and all attached documents, and that, based on my inquiry of those individuals immediately responsible for obtaining the information, I believe that the submitted information is true, accurate, and complete. I am aware that there are significant penalties for submitting false information.''

(4) A part clearly labeled ''Section I.C.'' which fully explains the basis for the petitioner's request that EPA add the labeling requirements to or remove them from the product which is the subject of the petition, based specifically upon the technical facility or laboratory tests, literature, or economic analysis described in paragraphs (c) (5), (6) and (7) of this section.

(5) A part clearly labeled ''Section II.A.'' which fully describes any technical facility or laboratory tests used to support the petitioner's claim.

(6) A part clearly labeled ''Section II.B.'' which fully explains any values taken from literature or estimated on the basis of known information that are used to support the petitioner's claim.

(7) A part clearly labeled ''Section II.C.'' which fully explains any economic analysis used to support the petitioner's claim.

(d) *Criteria for evaluating petitions.* Adequate data in support of any petition to the Agency to add a product to the labeling requirement or temporarily remove a product from the labeling requirement will be evaluated based upon a showing of sufficient quality and scope by the petitioner of whether there are or are not substitute products or manufacturing processes for such product:

(1) That do not rely on the use of such class I or class II substance;

(2) That reduce the overall risk to human health and the environment; and

(3) That are currently or potentially available.

(e) *Procedure for acceptance or denial of petition.* (1) If a petition submitted under this section contains adequate data, as defined under paragraph (c) of this section, the Agency shall within 180 days after receiving the complete petition either accept the petition or deny the petition.

(2) If the Agency makes a decision to accept a petition to apply the requirements of this regulation to a product containing or manufactured with a class II substance, the Agency will notify the petitioner and publish a proposed rule in the FEDERAL REGISTER to apply the labeling requirements to the product.

(3) If the Agency makes a decision to deny a petition to apply the requirements of this regulation to a product containing or manufactured with a class II substance, the Agency will notify the petitioner and publish an explanation of the petition denial in the FEDERAL REGISTER.

(4) If the Agency makes a decision to accept a petition to temporarily exempt a product manufactured with a class I substance from the requirements of this regulation, the Agency will notify the petitioner and publish a proposed rule in the FEDERAL REGISTER to temporarily exempt the product from the labeling requirements. Upon notification by the Agency, such manufacturer may immediately cease its labeling process for such exempted products.

(5) If the Agency makes a decision to deny a petition to temporarily exempt a product manufactured with a class I substance from the requirements of this regulation, the Agency will notify the petitioner and may, in appropriate circumstances, publish an explanation of the petition denial in the FEDERAL REGISTER.

§ 82.122 Certification, recordkeeping, and notice requirements.

(a) *Certification.* (1) Persons claiming the exemption provided in § 82.106(b)(2) must submit a written certification to the following address: Labeling Program Manager, Stratospheric Protection Division, Office of Atmospheric Programs, 6205–J, 1200 Pennsylvania Ave., NW., Washington, DC 20460.

(2) The certification must contain the following information:

(i) The exact location of documents verifying calendar year 1990 usage and

the 95% reduced usage during a twelve month period;

(ii) A description of the records maintained at that location;

(iii) A description of the type of system used to track usage;

(iv) An indication of which 12 month period reflects the 95% reduced usage, and;

(v) Name, address, and telephone number of a contact person.

(3) Persons who submit certifications postmarked on or before May 15, 1993, need not place warning labels on their products manufactured using CFC-113 or methyl chloroform as a solvent. Persons who submit certifications postmarked after May 15, 1993, must label their products manufactured using CFC-113 or methyl chloroform as a solvent for 14 days following such submittal of the certification.

(4) Persons certifying must also include a statement that indicates their future annual use will at no time exceed 5% of their 1990 usage.

(5) Certifications must be signed by the owner or a responsible corporate officer.

(6) If the Administrator determines that a person's certification is incomplete or that information supporting the exemption is inadequate, then products manufactured using CFC-113 or methyl chloroform as a solvent by such person must be labeled pursuant to § 82.106(a).

(b) *Recordkeeping*. Persons claiming the exemption under section 82.106(b)(2) must retain supporting documentation at one of their facilities.

(c) *Notice Requirements*. Persons who claim an exemption under § 82.106(b)(2) must submit a notice to the address in paragraph (a)(1) of this section within 30 days of the end of any 12 month period in which their usage of CFC-113 or methyl chloroform used as a solvent exceeds the 95% reduction from calendar year 1990.

§ 82.124 Prohibitions.

(a) *Warning statement*—(1) *Absence or presence of warning statement*. (i) Applicable May 15, 1993, except as indicated in paragraph (a)(5) of this section, no container or product identified in § 82.102(a) may be introduced into interstate commerce unless it bears a warning statement that complies with the requirements of § 82.106(a) of this subpart, unless such labeling is not required under § 82.102(c), § 82.106(b), § 82.112 (c) or (d), § 82.116(a), § 82.118(a), or temporarily exempted pursuant to § 82.120.

(ii) On January 1, 2015, or any time between May 15, 1993 and January 1, 2015 that the Administrator determines for a particular product manufactured with or containing a class II substance that there are substitute products or manufacturing processes for such product that do not rely on the use of a class I or class II substance, that reduce the overall risk to human health and the environment, and that are currently or potentially available, no product identified in § 82.102(b) may be introduced into interstate commerce unless it bears a warning statement that complies with the requirements of § 82.106, unless such labeling is not required under § 82.106(b), § 82.112 (c) or (d), § 82.116(a) or § 82.118(a).

(2) *Placement of warning statement*. (i) On May 15, 1993, except as indicated in paragraph (a)(5) of this section, no container or product identified in § 82.102(a) may be introduced into interstate commerce unless it bears a warning statement that complies with the requirements of § 82.108 of this subpart, unless such labeling is not required under § 82.102(c), § 82.106(b), § 82.112 (c) or (d), § 82.116(a), § 82.118(a), or temporarily exempted pursuant to § 82.120.

(ii) On January 1, 2015, or any time between May 15, 1993 and January 1, 2015 that the Administrator determines for a particular product manufactured with or containing a class II substance that there are substitute products or manufacturing processes for such product that do not rely on the use of a class I or class II substance, that reduce the overall risk to human health and the environment, and that are currently or potentially available, no product identified in § 82.102(b) may be introduced into interstate commerce unless it bears a warning statement that complies with the requirements of § 82.108 of this subpart, unless such labeling is not required under § 82.106(b), § 82.112 (c) or (d), § 82.116(a) or § 82.118(a).

(3) *Form of label bearing warning statement*. (i) Applicable May 15, 1993, except

as indicated in paragraph (a)(5) of this section, no container or product identified in § 82.102(a) may be introduced into interstate commerce unless it bears a warning statement that complies with the requirements of § 82.110, unless such labeling is not required pursuant to § 82.102(c), § 82.106(b), § 82.112 (c) or (d), § 82.116(a), § 82.118(a), or temporarily exempted pursuant to § 82.120.

(ii) On January 1, 2015, or any time between May 15, 1993 and January 1, 2015 that the Agency determines for a particular product manufactured with or containing a class II substance, that there are substitute products or manufacturing processes that do not rely on the use of a class I or class II substance, that reduce the overall risk to human health and the environment, and that are currently or potentially available, no product identified in § 82.102(b) may be introduced into interstate commerce unless it bears a warning statement that complies with the requirements of § 82.110, unless such labeling is not required pursuant to § 82.106(b), § 82.112 (c) or (d), § 82.116(a), or § 82.118(a).

(4) On or after May 15, 1993, no person may modify, remove or interfere with any warning statement required by this subpart, except as described in § 82.112.

(5) In the case of any substance designated as a class I or class II substance after February 11, 1993, the prohibitions in paragraphs (a)(1)(i), (a)(2)(i), and (a)(3)(i) of this section shall be applicable one year after the designation of such substance as a class I or class II substance unless otherwise specified in the designation.

Subpart F—Recycling and Emissions Reduction

SOURCE: 58 FR 28712, May 14, 1993, unless otherwise noted.

§ 82.150 Purpose and scope.

(a) The purpose of this subpart is to reduce emissions of class I and class II refrigerants and their substitutes to the lowest achievable level by maximizing the recapture and recycling of such refrigerants during the service, maintenance, repair, and disposal of appliances and restricting the sale of refrigerants consisting in whole or in part of a class I and class II ODS in accordance with Title VI of the Clean Air Act.

(b) This subpart applies to any person servicing, maintaining, or repairing appliances. This subpart also applies to persons disposing of appliances, including small appliances and motor vehicle air conditioners. In addition, this subpart applies to refrigerant reclaimers, technician certifying programs, appliance owners and operators, manufacturers of appliances, manufacturers of recycling and recovery equipment, approved recycling and recovery equipment testing organizations, persons selling class I or class II refrigerants or offering class I or class II refrigerants for sale, and persons purchasing class I or class II refrigerants.

[69 FR 11978, Mar. 12, 2004]

§ 82.152 Definitions.

Appliance means any device which contains and uses a refrigerant and which is used for household or commercial purposes, including any air conditioner, refrigerator, chiller, or freezer.

Apprentice means any person who is currently registered as an apprentice in service, maintenance, repair, or disposal of appliances with the U.S. Department of Labor's Bureau of Apprenticeship and Training (or a State Apprenticeship Council recognized by the Bureau of Apprenticeship and Training). If more than two years have elapsed since the person first registered as an apprentice with the Bureau of Apprenticeship and Training (or a State Apprenticeship Council recognized by the Bureau of Apprenticeship and Training), the person shall not be considered an apprentice.

Approved equipment testing organization means any organization which has applied for and received approval from the Administrator pursuant to § 82.160.

Certified refrigerant recovery or recycling equipment means equipment manufactured before November 15, 1993, that meets the standards in § 82.158(c), (e), or (g); equipment certified by an approved equipment testing organization to meet the standards in § 82.158(b), (d), or (f); or equipment certified pursuant to § 82.36(a).

Commercial refrigeration means, for the purposes of § 82.156(i), the refrigeration appliances utilized in the retail food and cold storage warehouse sectors. Retail food includes the refrigeration equipment found in supermarkets, convenience stores, restaurants and other food service establishments. Cold storage includes the equipment used to store meat, produce, dairy products, and other perishable goods. All of the equipment contains large refrigerant charges, typically over 75 pounds.

Critical component means, for the purposes of § 82.156(i), a component without which industrial process refrigeration equipment will not function, will be unsafe in its intended environment, and/or will be subject to failures that would cause the industrial process served by the refrigeration appliance to be unsafe.

Custom-built means, for the purposes of § 82.156(i), that the equipment or any of its critical components cannot be purchased and/or installed without being uniquely designed, fabricated and/or assembled to satisfy a specific set of industrial process conditions.

Disposal means the process leading to and including:

(1) The discharge, deposit, dumping or placing of any discarded appliance into or on any land or water;

(2) The disassembly of any appliance for discharge, deposit, dumping or placing of its discarded component parts into or on any land or water; or

(3) The disassembly of any appliance for reuse of its component parts.

Follow-up verification test means, for the purposes of § 82.156(i), those tests that involve checking the repairs within 30 days of the appliance's returning to normal operating characteristics and conditions. Follow-up verification tests for appliances from which the refrigerant charge has been evacuated means a test conducted after the appliance or portion of the appliance has resumed operation at normal operating characteristics and conditions of temperature and pressure, except in cases where sound professional judgment dictates that these tests will be more meaningful if performed prior to the return to normal operating characteristics and conditions. A follow-up verification test with respect to repairs conducted without evacuation of the refrigerant charge means a reverification test conducted after the initial verification test and usually within 30 days of normal operating conditions. Where an appliance is not evacuated, it is only necessary to conclude any required changes in pressure, temperature or other conditions to return the appliance to normal operating characteristics and conditions.

Full charge means the amount of refrigerant required for normal operating characteristics and conditions of the appliance as determined by using one or a combination of the following four methods:

(1) Use the equipment manufacturer's determination of the correct full charge for the equipment;

(2) Determine the full charge by making appropriate calculations based on component sizes, density of refrigerant, volume of piping, and other relevant considerations;

(3) Use actual measurements of the amount of refrigerant added or evacuated from the appliance; and/or

(4) Use an established range based on the best available data regarding the normal operating characteristics and conditions for the appliance, where the midpoint of the range will serve as the full charge, and where records are maintained in accordance with § 82.166(q).

High-pressure appliance means an appliance that uses a refrigerant with a liquid phase saturation pressure between 170 psia and 355 psia at 104 °F. This definition includes but is not limited to appliances using R–401A, R–409A, R–401B, R–411A, R–22, R–411B, R–502, R–402B, R–408A, and R–402A.

Industrial process refrigeration means, for the purposes of § 82.156(i), complex customized appliances used in the chemical, pharmaceutical, petrochemical and manufacturing industries. These appliances are directly linked to the industrial process. This sector also includes industrial ice machines, appliances used directly in the generation of electricity, and ice rinks. Where one appliance is used for both industrial process refrigeration and other applications, it will be considered industrial process refrigeration equipment if 50 percent or more of its

operating capacity is used for industrial process refrigeration.

Industrial process shutdown means, for the purposes of § 82.156(i), that an industrial process or facility temporarily ceases to operate or manufacture whatever is being produced at that facility.

Initial verification test means, for the purposes of § 82.156(i), those leak tests that are conducted as soon as practicable after the repair is completed. An initial verification test, with regard to the leak repairs that require the evacuation of the appliance or portion of the appliance, means a test conducted prior to the replacement of the full refrigerant charge and before the appliance or portion of the appliance has reached operation at normal operating characteristics and conditions of temperature and pressure. An initial verification test with regard to repairs conducted without the evacuation of the refrigerant charge means a test conducted as soon as practicable after the conclusion of the repair work.

Leak rate means the rate at which an appliance is losing refrigerant, measured between refrigerant charges. The leak rate is expressed in terms of the percentage of the appliance's full charge that would be lost over a 12-month period if the current rate of loss were to continue over that period. The rate is calculated using only one of the following methods for all appliances located at an operating facility.

(1) Method 1. (i) Step 1. Take the number of pounds of refrigerant added to the appliance to return it to a full charge and divide it by the number of pounds of refrigerant the appliance normally contains at full charge;

(ii) Step 2. Take the shorter of the number of days that have passed since the last day refrigerant was added or 365 days and divide that number by 365 days;

(iii) Step 3. Take the number calculated in Step 1. and divide it by the number calculated in Step 2.; and

(iv) Step 4. Multiply the number calculated in Step 3. by 100 to calculate a percentage. This method is summarized in the following formula:

$$\text{Leak rate (\% per year)} = \frac{\text{pounds of refrigerant added}}{\text{pounds of refrigerant in full charge}} \times \frac{\text{365 days/year}}{\text{shorter of: \# days since refrigerant last added or 365 days}} \times 100\%$$

(2) Method 2. (i) Step 1. Take the sum of the quantity of refrigerant added to the appliance over the previous 365-day period (or over the period that has passed since leaks in the appliance were last repaired, if that period is less than one year),

(ii) Step 2. Divide the result of Step 1. by the quantity (*e.g.*, pounds) of refrigerant the appliance normally contains at full charge, and

(iii) Step 3. Multiply the result of Step 2. by 100 to obtain a percentage. This method is summarized in the following formula:

$$\text{Leak rate (\% per year)} = \frac{\text{pounds of refrigerant added over past 365 days (or since leaks were last repaired, if that period is less than one year)}}{\text{pounds of refrigerant in full charge}} \times 100\%$$

Low-loss fitting means any device that is intended to establish a connection between hoses, appliances, or recovery or recycling machines and that is designed to close automatically or to be closed manually when disconnected, minimizing the release of refrigerant from hoses, appliances, and recovery or recycling machines.

Low-pressure appliance means an appliance that uses a refrigerant with a liquid phase saturation pressure below 45 psia at 104 °F. This definition includes but is not limited to appliances using R–11, R–123, and R–113.

Major maintenance, service, or repair means any maintenance, service, or repair that involves the removal of any or all of the following appliance components: compressor, condenser, evaporator, or auxiliary heat exchange coil; or any maintenance, service, or repair that involves uncovering an opening of more than four (4) square inches of ''flow area'' for more than 15 minutes.

Medium-pressure appliance means an appliance that uses a refrigerant with a liquid phase saturation pressure between 45 psia and 170 psia at 104 °F. This definition includes but is not limited to appliances using R–114, R–124, R–12, R–401C, R–406A, and R–500.

Motor vehicle air conditioner (MVAC) means any appliance that is a motor vehicle air conditioner as defined in 40 CFR part 82, subpart B.

MVAC-like appliance means mechanical vapor compression, open-drive compressor appliances with a normal charge of 20 pounds or less of refrigerant used to cool the driver's or passenger's compartment of an off-road motor vehicle. This includes the air-conditioning equipment found on agricultural or construction vehicles. This definition is not intended to cover appliances using R–22 refrigerant.

Normal operating characteristics or conditions means, for the purposes of § 82.156(i), temperatures, pressures, fluid flows, speeds and other characteristics that would normally be expected for a given process load and ambient condition during operation. Normal operating characteristics and conditions are marked by the absence of atypical conditions affecting the operation of the refrigeration appliance.

Normally containing a quantity of refrigerant means containing the quantity of refrigerant within the appliance or appliance component when the appliance is operating with a full charge of refrigerant.

One-time expansion device means an appliance that relies on the one-time release of its refrigerant charge to the environment in order to provide a cooling effect.

Opening an appliance means any service, maintenance, repair, or disposal of an appliance that would release refrigerant from the appliance to the atmosphere unless the refrigerant was recovered previously from the appliance. Connecting and disconnecting hoses and gauges to and from the appliance to measure pressures within the appliance and to add refrigerant to or recover refrigerant from the appliance shall not be considered ''opening.''

Parent company means an individual, corporation, partnership, association, joint-stock company, or an unincorporated organization that can direct or cause the direction of management and policies of another entity, through the ownership of shares or otherwise.

Person means any individual or legal entity, including an individual, corporation, partnership, association, state, municipality, political subdivision of a state, Indian tribe, and any agency, department, or instrumentality of the United States, and any officer, agent, or employee thereof.

Process stub means a length of tubing that provides access to the refrigerant inside a small appliance or room air conditioner and that can be resealed at the conclusion of repair or service.

Reclaim refrigerant means to reprocess refrigerant to all of the specifications in appendix A to 40 CFR part 82, subpart F (based on ARI Standard 700–1995, Specification for Fluorocarbons and Other Refrigerants) that are applicable to that refrigerant and to verify that the refrigerant meets these specifications using the analytical methodology prescribed in section 5 of appendix A of 40 CFR part 82, subpart F.

Recover refrigerant means to remove refrigerant in any condition from an appliance and to store it in an external container without necessarily testing or processing it in any way.

Recovery efficiency means the percentage of refrigerant in an appliance that is recovered by a piece of recycling or recovery equipment.

Recycle refrigerant means to extract refrigerant from an appliance and clean refrigerant for reuse without meeting all of the requirements for

reclamation. In general, recycled refrigerant is refrigerant that is cleaned using oil separation and single or multiple passes through devices, such as replaceable core filter-driers, which reduce moisture, acidity, and particulate matter. These procedures are usually implemented at the field job site.

Refrigerant means, for purposes of this subpart, any substance consisting in part or whole of a class I or class II ozone-depleting substance that is used for heat transfer purposes and provides a cooling effect.

Refrigerant circuit means the parts of an appliance that are normally connected to each other (or are separated only by internal valves) and are designed to contain refrigerant.

Self-contained recovery equipment means refrigerant recovery or recycling equipment that is capable of removing the refrigerant from an appliance without the assistance of components contained in the appliance.

Small appliance means any appliance that is fully manufactured, charged, and hermetically sealed in a factory with five (5) pounds or less of a class I or class II substance used as a refrigerant, including, but not limited to, refrigerators and freezers (designed for home, commercial, or consumer use), medical or industrial research refrigeration equipment, room air conditioners (including window air conditioners and packaged terminal air heat pumps), dehumidifiers, under-the-counter ice makers, vending machines, and drinking water coolers.

Substitute means any chemical or product, whether existing or new, that is used by any person as an EPA approved replacement for a class I or II ozone-depleting substance in a given refrigeration or air-conditioning end-use.

Suitable replacement refrigerant means, for the purposes of § 82.156(i)(7)(i), a refrigerant that is acceptable under section 612(c) of the Clean Air Act Amendments of 1990 and all regulations promulgated under that section, compatible with other materials with which it may come into contact, and able to achieve the temperatures required for the affected industrial process in a technically feasible manner.

System-dependent recovery equipment means refrigerant recovery equipment that requires the assistance of components contained in an appliance to remove the refrigerant from the appliance.

System mothballing means the intentional shutting down of a refrigeration appliance undertaken for an extended period of time by the owners or operators of that facility, where the refrigerant has been evacuated from the appliance or the affected isolated section of the appliance, at least to atmospheric pressure.

Technician means any person who performs maintenance, service, or repair, that could be reasonably expected to release refrigerants from appliances, except for MVACs, into the atmosphere. Technician also means any person who performs disposal of appliances, except for small appliances, MVACs, and MVAC-like appliances, that could be reasonably expected to release refrigerants from the appliances into the atmosphere. Performing maintenance, service, repair, or disposal could be reasonably expected to release refrigerants only if the activity is reasonably expected to violate the integrity of the refrigerant circuit. Activities reasonably expected to violate the integrity of the refrigerant circuit include activities such as attaching and detaching hoses and gauges to and from the appliance to add or remove refrigerant or to measure pressure and adding refrigerant to and removing refrigerant from the appliance. Activities such as painting the appliance, rewiring an external electrical circuit, replacing insulation on a length of pipe, or tightening nuts and bolts on the appliance are not reasonably expected to violate the integrity of the refrigerant circuit. Performing maintenance, service, repair, or disposal of appliances that have been evacuated pursuant to § 82.156 could not be reasonably expected to release refrigerants from the appliance unless the maintenance, service, or repair consists of adding refrigerant to the appliance. Technician includes but is not limited to installers, contractor employees, in-house service personnel, and in some cases owners and/or operators.

Very high-pressure appliance means an appliance that uses a refrigerant with a critical temperature below 104 °F or with a liquid phase saturation pressure above 355 psia at 104 °F. This definition includes but is not limited to appliances using R–13 or R–503.

Voluntary certification program means a technician testing program operated by a person before that person obtained approval of a technician certification program pursuant to § 82.161(c).

[58 FR 28712, May 14, 1993, as amended at 59 FR 42956, Aug. 19, 1994; 59 FR 55925, Nov. 9, 1994; 60 FR 40439, Aug. 8, 1995; 68 FR 43806, July 24, 2003; 69 FR 11978, Mar. 12, 2004; 70 FR 1991, Jan. 11, 2005; 70 FR 19278, Apr. 13, 2005]

§ 82.154 Prohibitions.

(a)(1) Effective June 13, 2005, no person maintaining, servicing, repairing, or disposing of appliances may knowingly vent or otherwise release into the environment any refrigerant or substitute from such appliances, with the exception of the following substitutes in the following end-uses:

(i) Ammonia in commercial or industrial process refrigeration or in absorption units;

(ii) Hydrocarbons in industrial process refrigeration (processing of hydrocarbons);

(iii) Chlorine in industrial process refrigeration (processing of chlorine and chlorine compounds);

(iv) Carbon dioxide in any application;

(v) Nitrogen in any application; or

(vi) Water in any application.

(2) The knowing release of a refrigerant or non-exempt substitute subsequent to its recovery from an appliance shall be considered a violation of this prohibition. De minimis releases associated with good faith attempts to recycle or recover refrigerants or non-exempt substitutes are not subject to this prohibition. Refrigerant releases shall be considered de minimis only if they occur when:

(i) The required practices set forth in § 82.156 are observed, recovery or recycling machines that meet the requirements set forth in § 82.158 are used, and the technician certification provisions set forth in § 82.161 are observed; or

(ii) The requirements set forth in subpart B of this part are observed.

(b) No person may open appliances except MVACs and MVAC-like appliances for maintenance, service, or repair, and no person may dispose of appliances except for small appliances, MVACs, and MVAC-like appliances:

(1) Without observing the required practices set forth in § 82.156; and

(2) Without using equipment that is certified for that type of appliance pursuant to § 82.158.

(c) No person may manufacture or import recycling or recovery equipment for use during the maintenance, service, or repair of appliances except MVACs and MVAC-like appliances, and no person may manufacture or import recycling or recovery equipment for use during the disposal of appliances except small appliances, MVACs, and MVAC-like appliances, unless the equipment is certified pursuant to § 82.158 (b) or (d), as applicable.

(d) Effective June 14, 1993, no person shall alter the design of certified refrigerant recycling or recovery equipment in a way that would affect the equipment's ability to meet the certification standards set forth in § 82.158 without resubmitting the altered design for certification testing. Until it is tested and shown to meet the certification standards set forth in § 82.158, equipment so altered will be considered uncertified for the purposes of § 82.158.

(e) Effective August 12, 1993, no person may open appliances except MVACs for maintenance, service, or repair, and no person may dispose of appliances except for small appliances, MVACs, and MVAC-like appliances, unless such person has certified to the Administrator pursuant to § 82.162 that such person has acquired certified recovery or recycling equipment and is complying with the applicable requirements of this subpart.

(f) Effective August 12, 1993, no person may recover refrigerant from small appliances, MVACs, and MVAC-like appliances for purposes of disposal of these appliances unless such person has certified to the Administrator pursuant to § 82.162 that such person has acquired recovery equipment that meets the standards set forth in § 82.158 (l) and/or (m), as applicable, and that such person is complying with the applicable requirements of this subpart.

(g) No person may sell, distribute, or offer for sale or distribution for use as a refrigerant any class I or class II substance consisting wholly or in part of used refrigerant unless:

(1) The class I or class II substance has been reclaimed as defined in § 82.152 by a person who has been certified as a reclaimer pursuant to § 82.164;

(2) The class I or class II substance was used only in an MVAC or MVAC-like appliance and is to be used only in an MVAC or MVAC-like appliance and recycled in accordance with § 82.34(d);

(3) The class I or class II substance is contained in an appliance that is sold or offered for sale together with the class I or class II substance;

(4) The class I or class II substance is being transferred between or among a parent company and one or more of its subsidiaries, or between or among subsidiaries having the same parent company; or

(5) The class I or class II substance is being transferred between or among a Federal agency or department and a facility or facilities owned by the same Federal agency or department.

(h) [Reserved]

(i) Effective August 12, 1993, no person reclaiming refrigerant may release more than 1.5% of the refrigerant received by them.

(j) Effective November 15, 1993, no person may sell or distribute, or offer for sale or distribution, any appliances, except small appliances, unless such equipment is equipped with a servicing aperture to facilitate the removal of refrigerant at servicing and disposal.

(k) Effective November 15, 1993, no person may sell or distribute, or offer for sale or distribution any small appliance unless such equipment is equipped with a process stub to facilitate the removal of refrigerant at servicing and disposal.

(l) No technician training or testing program may issue certificates pursuant to § 82.161 unless the program complies with all of the standards of § 82.161 and appendix D, and has been granted approval.

(m) No person may sell or distribute, or offer for sale or distribution, any substance that consists in whole or in part of a class I or class II substance for use as a refrigerant to any person unless:

(1) The buyer has been certified as a Type I, Type II, Type III, or Universal technician pursuant to § 82.161;

(2) The buyer complies with § 82.166(b) and employs at least one technician who is certified as a Type I, Type II, Type III, or Universal technician in accordance with § 82.161;

(3) The buyer has been certified in accordance with 40 CFR part 82, subpart B and the refrigerant is either R–12 or an approved substitute consisting wholly or in part of a class I or class II substance for use in motor vehicle air conditioners in accordance with 40 CFR part 82, subpart G;

(4) The buyer complies with § 82.166 (b) and employs at least one technician who is certified in accordance with 40 CFR part 82, subpart B, and the refrigerant is either R–12 or an approved substitute consisting wholly or in part of a class I or class II substance for use in motor vehicle air conditioners pursuant to 40 CFR part 82, subpart G. Nothing in this provision shall be construed to relieve persons of the requirements of § 82.34(b) or § 82.42 (b);

(5) The refrigerant is sold only for eventual resale to certified technicians or to appliance manufacturers (*e.g.*, sold by a manufacturer to a wholesaler, sold by a technician to a reclaimer);

(6) The refrigerant is sold to an appliance manufacturer;

(7) The refrigerant is contained in an appliance with a fully assembled refrigerant circuit; or

(8) The refrigerant is charged into an appliance by a certified technician or an apprentice during maintenance, service, or repair of the appliance.

(n) It is a violation of this subpart to accept a signed statement pursuant to § 82.156(f)(2) if the person knew or had reason to know that such a signed statement is false.

(o) Rules stayed for consideration. Not withstanding any other provisions of this subpart, the effectiveness of 40 CFR 82.154(m), only as it applies to refrigerant contained in appliances without fully assembled refrigerant circuits, is stayed from April 27, 1995, until EPA takes final action on its reconsideration of these provisions. EPA

will publish any such final action in the FEDERAL REGISTER.

(p) No person may manufacture or import one-time expansion devices that contain other than exempted refrigerants.

[58 FR 28712, May 14, 1993, as amended at 59 FR 42956, Aug. 19, 1994; 59 FR 55926, Nov. 9, 1994; 60 FR 14610, Mar. 17, 1995; 60 FR 24680, May 9, 1995; 61 FR 7726, Feb. 29, 1996; 61 FR 68508, Dec. 27, 1996; 68 FR 43806, July 24, 2003; 69 FR 11979, Mar. 12, 2004; 70 FR 19278, Apr. 13, 2005]

§ 82.156 Required practices.

(a) All persons disposing of appliances, except for small appliances, MVACs, and MVAC-like appliances must evacuate the refrigerant, including all the liquid refrigerant, in the entire unit to a recovery or recycling machine certified pursuant to § 82.158. All persons opening appliances except for MVACs and MVAC-like appliances for maintenance, service, or repair must evacuate the refrigerant, including all the liquid refrigerant (except as provided in paragraph (a)(2)(i)(B) of this section), in either the entire unit or the part to be serviced (if the latter can be isolated) to a system receiver (*e.g.*, the remaining portions of the appliance, or a specific vessel within the appliance) or a recovery or recycling machine certified pursuant to § 82.158. A technician must verify that the applicable level of evacuation has been reached in the appliance or the part before it is opened.

(1) Persons opening appliances except for small appliances, MVACs, and MVAC-like appliances for maintenance, service, or repair must evacuate to the levels in table 1 before opening the appliance, unless

(i) Evacuation of the appliance to the atmosphere is not to be performed after completion of the maintenance, service, or repair, and the maintenance, service, or repair is not major as defined at § 82.152; or

(ii) Due to leaks in the appliance, evacuation to the levels in table 1 is not attainable, or would substantially contaminate the refrigerant being recovered; or

(iii) The recycling or recovery equipment was certified pursuant to § 82.158(b)(2). In any of these cases, the requirements of § 82.156(a)(2) must be followed.

(2)(i) If evacuation of the appliance to the atmosphere is not to be performed after completion of the maintenance, service, or repair, and if the maintenance, service, or repair is not major as defined at § 82.152, the appliance must:

(A) Be evacuated to a pressure no higher than 0 psig before it is opened if it is a high- or very high-pressure appliance;

(B) Be pressurized to a pressure no higher than 0 psig before it is opened if it is a low-pressure appliance. Persons must cover openings when isolation is not possible. Persons pressurizing low-pressure appliances that use refrigerants with boiling points at or below 85 degrees Fahrenheit at 29.9 inches of mercury (standard atmospheric pressure), (*e.g.* R–11 and R–123), must not use methods such as nitrogen, that require subsequent purging. Persons pressurizing low-pressure appliances that use refrigerants with boiling points above 85 degrees Fahrenheit at 29.9 inches of mercury, *e.g.*, R–113, must use heat to raise the internal pressure of the appliance as much as possible, but may use nitrogen to raise the internal pressure of the appliance from the level attainable through use of heat to atmospheric pressure; or

(C) For the purposes of oil changes, be evacuated or pressurized to a pressure no higher than 5 psig, before it is opened; or drain the oil into a system receiver to be evacuated or pressurized to a pressure no higher than 5 psig.

(ii) If, due to leaks in the appliance, evacuation to the levels in table 1 is not attainable, or would substantially contaminate the refrigerant being recovered, persons opening the appliance must:

(A) Isolate leaking from non-leaking components wherever possible;

(B) Evacuate non-leaking components to be opened to the levels specified in table 1; and

(C) Evacuate leaking components to be opened to the lowest level that can be attained without substantially contaminating the refrigerant. In no case shall this level exceed 0 psig.

(iii) If the recycling or recovery equipment was certified pursuant to

§ 82.158(b)(2), technicians must follow the manufacturer's directions for achieving the required recovery efficiency.

(3) Persons disposing of appliances except for small appliances, MVACs, and MVAC-like appliances, must evacuate to the levels in table 1 unless, due to leaks in the appliance, evacuation to the levels in table 1 is not attainable, or would substantially contaminate the refrigerant being recovered. If, due to leaks in the appliance, evacuation to the levels in table 1 is not attainable, or would substantially contaminate the refrigerant being recovered, persons disposing of the appliance must:

(i) Isolate leaking from non-leaking components wherever possible;

(ii) Evacuate non-leaking components to the levels specified in table 1; and

(iii) Evacuate leaking components to the lowest level that can be attained without substantially contaminating the refrigerant. In no case shall this level exceed 0 psig.

TABLE 1—REQUIRED LEVELS OF EVACUATION FOR APPLIANCES

[Except for small appliances, MVACs, and MVAC-like appliances]

Type of appliance	Inches of Hg vacuum (relative to standard atmospheric pressure of 29.9 inches Hg)	
	Using recovery or recycling equipment manufactured or imported before November 15, 1993	Using recovery or recycling equipment manufactured or imported on or after November 15, 1993
Very high-pressure appliance	0	0
High-pressure appliance, or isolated component of such appliance, normally containing less than 200 pounds of refrigerant.	0	0
High-pressure appliance, or isolated component of such appliance, normally containing 200 pounds or more of refrigerant.	4	10
Medium-pressure appliance, or isolated component of such appliance, normally containing less than 200 pounds of refrigerant.	4	10
Medium-pressure appliance, or isolated component of such appliance, normally containing 200 pounds or more of refrigerant.	4	15
Low-pressure appliance	25	25 mm Hg absolute

(4) Persons opening small appliances for maintenance, service, or repair must:

(i) When using recycling and recovery equipment manufactured before November 15, 1993, recover 80% of the refrigerant in the small appliance; or

(ii) When using recycling or recovery equipment manufactured on or after November 15, 1993, recover 90% of the refrigerant in the appliance when the compressor in the appliance is operating, or 80% of the refrigerant in the appliance when the compressor in the appliance is not operating; or

(iii) Evacuate the small appliance to four inches of mercury vacuum.

(5) Persons opening MVAC-like appliances for maintenance, service, or repair may do so only while properly using, as defined at § 82.32(e), recycling or recovery equipment certified pursuant to § 82.158 (f) or (g), as applicable.

(b) All persons opening appliances except for small appliances, MVACs, and MVAC-like appliances for maintenance, service, or repair and all persons disposing of appliances except small appliances, MVACs, and MVAC-like appliances must have at least one piece of certified, self-contained recovery or recycling equipment available at their place of business. Persons who maintain, service, repair, or dispose of only appliances that they own and that contain pump-out units are exempt from this requirement. This exemption does not relieve such persons from other applicable requirements of this section.

(c) System-dependent equipment shall not be used with appliances normally containing more than 15 pounds of refrigerant, unless the system-dependent equipment is permanently attached to the appliance as a pump-out unit.

(d) All recovery or recycling equipment shall be used in accordance with the manufacturer's directions unless such directions conflict with the requirements of this subpart.

(e) Refrigerant may be returned to the appliance from which it is recovered or to another appliance owned by the same person without being recycled or reclaimed, unless the appliance is an MVAC or MVAC-like appliance.

(f) Effective July 13, 1993, persons who take the final step in the disposal process (including but not limited to scrap recyclers and landfill operators) of a small appliance, room air conditioning, MVACs, or MVAC-like appliances must either:

(1) Recover any remaining refrigerant from the appliance in accordance with paragraph (g) or (h) of this section, as applicable; or

(2) Verify that the refrigerant has been evacuated from the appliance or shipment of appliances previously. Such verification must include a signed statement from the person from whom the appliance or shipment of appliances is obtained that all refrigerant that had not leaked previously has been recovered from the appliance or shipment of appliances in accordance with paragraph (g) or (h) of this section, as applicable. This statement must include the name and address of the person who recovered the refrigerant and the date the refrigerant was recovered or a contract that refrigerant will be removed prior to delivery.

(3) Persons complying with paragraph (f)(2) of this section must notify suppliers of appliances that refrigerant must be properly removed before delivery of the items to the facility. The form of this notification may be warning signs, letters to suppliers, or other equivalent means.

(g) All persons recovering refrigerant from MVACs and MVAC-like appliances for purposes of disposal of these appliances must reduce the system pressure to or below 102 mm of mercury vacuum, using equipment that meets the standards set forth in § 82.158(l).

(h) All persons recovering the refrigerant from small appliances for purposes of disposal of these appliances must either:

(1) Recover 90% of the refrigerant in the appliance when the compressor in the appliance is operating, or 80% of the refrigerant in the appliance when the compressor in the appliance is not operating; or

(2) Evacuate the small appliance to four inches of mercury vacuum.

(i)(1) Owners or operators of commercial refrigeration equipment normally containing more than 50 pounds of refrigerant must have leaks repaired in accordance with paragraph (i)(9) of this section, if the appliance is leaking at a rate such that the loss of refrigerant will exceed 35 percent of the total charge during a 12-month period, except as described in paragraphs (i)(6), (i)(8), and (i)(10) of this section and paragraphs (i)(1)(i), (i)(1)(ii), and (i)(1)(iii) of this section. Repairs must bring the annual leak rate to below 35 percent.

(i) If the owners or operators of the federally-owned commercial refrigerant appliances determine that the leaks cannot be repaired in accordance with paragraph (i)(9) of this section and that an extension in accordance with the requirements discussed in this paragraph (i)(1)(i) of this section apply, they must document all repair efforts, and notify EPA of their inability to comply within the 30-day repair requirement, and the reason for the inability must be submitted to EPA in accordance with § 82.166(n). Such notification must be made within 30 days of discovering the leaks. EPA will determine if the extension requested in accordance with the requirements discussed in paragraph (i)(1)(i) of this section is justified. If the extension is not justified, EPA will notify the owner/operator within 30 days of receipt of the notification.

(ii) Owners or operators of federally-owned commercial refrigeration equipment may have more than 30 days to repair leaks if the refrigeration appliance is located in an area subject to radiological contamination or where the shutting down of the appliance will directly lead to radiological contamination. Only the additional time needed to conduct and complete repairs in a safe working environment will be permitted.

(iii) Owners or operators of federally-owned commercial refrigeration equipment requesting or who are granted time extensions under this paragraph must comply with paragraphs (i)(3) and (i)(4) of this section.

(2) The owners or operators of industrial process refrigeration equipment normally containing more than 50 pounds of refrigerant must have leaks repaired if the appliance is leaking at a rate such that the loss of refrigerant will exceed 35 percent of the total charge during a 12-month period in accordance with paragraph (i)(9) of this section, except as described in paragraphs (i)(6), (i)(7) and (i)(10) of this section, and paragraphs (i)(2)(i) and (i)(2)(ii) of this section. Repairs must bring annual leak rates to below 35 percent during a 12-month period. If the owners or operators of the industrial process refrigeration equipment determine that the leak rate cannot be brought to below 35 percent during a 12-month period within 30 days (or 120 days, where an industrial process shutdown in accordance with paragraph (i)(2)(ii) of this section is required,) and in accordance with paragraph (i)(9) of this section, and that an extension in accordance with the requirements discussed in this paragraph apply, the owners or operators of the appliance must document all repair efforts, and notify EPA of the reason for the inability in accordance with § 82.166(n) within 30 days of making this determination. Owners or operators who obtain an extension pursuant to this section or elect to utilize the additional time provided in paragraph (i)(2)(i) of this section, must conduct all necessary leak repairs, if any, that do not require any additional time beyond the initial 30 or 120 days.

(i) The owners or operators of industrial process refrigeration equipment are permitted more than 30 days (or 120 days where an industrial process shutdown in accordance with paragraph (i)(2)(ii) of this section is required) to repair leaks, if the necessary parts are unavailable or if requirements of other applicable federal, state, or local regulations make a repair within 30 or 120 days impossible. Only the additional time needed to receive delivery of the necessary parts or to comply with the pertinent regulations will be permitted.

(ii) Owners or operators of industrial process refrigeration equipment will have a 120-day repair period, rather than a 30-day repair period, to repair leaks in instances where an industrial process shutdown is needed to repair a leak or leaks from industrial process refrigeration equipment.

(3) Owners or operators of industrial process refrigeration equipment and owners or operators of federally-owned commercial refrigeration equipment or of federally-owned comfort cooling appliances who are granted additional time under paragraphs (i)(1) or (i)(5) of this section, must have repairs performed in a manner that sound professional judgment indicates will bring the leak rate below the applicable allowable leak rate. When an industrial process shutdown has occurred or when repairs have been made while an appliance is mothballed, the owners or operators shall conduct an initial verification test at the conclusion of the repairs and a follow-up verification test. The follow-up verification test shall be conducted within 30 days of completing the repairs or within 30 days of bringing the appliance back online, if taken off-line, but no sooner than when the appliance has achieved normal operating characteristics and conditions. When repairs have been conducted without an industrial process shutdown or system mothballing, an initial verification test shall be conducted at the conclusion of the repairs, and a follow-up verification test shall be conducted within 30 days of the initial verification test. In all cases, the follow-up verification test shall be conducted at normal operating characteristics and conditions, unless sound professional judgment indicates that tests performed at normal operating characteristics and conditions will produce less reliable results, in which case the follow-up verification test shall be conducted at or near the normal operating pressure where practicable, and at or near the normal operating temperature where practicable.

(i) If the owners or operators of industrial process refrigeration equipment takes the appliance off-line, or if the owners or operators of federally-

owned commercial refrigeration or of federally-owned comfort cooling appliances who are granted additional time under paragraphs (i)(1) or (i)(5) of this section take the appliance off-line, they cannot bring the appliance back on-line until an initial verification test indicates that the repairs undertaken in accordance with paragraphs (i)(1)(i), (ii), (iii), or (i)(2)(i) and (ii), or (5)(i), (ii), and (iii) of this section have been successfully completed, demonstrating the leak or leaks are repaired. The owners or operators of the industrial process refrigeration equipment, federally-owned commercial refrigeration appliances, or federally-owned comfort cooling appliances are exempted from this requirement only where the owners or operators will retrofit or retire the industrial process refrigeration equipment, federally-owned commercial refrigeration appliance, or federally-owned comfort cooling appliance in accordance with paragraph (i)(6) of this section. Under this exemption, the owner or operators may bring the industrial process refrigeration equipment, federally-owned commercial refrigeration appliance, or federally-owned comfort cooling appliance back on-line without successful completion of an initial verification test.

(ii) If the follow-up verification test indicates that the repairs to industrial process refrigeration equipment, federally-owned commercial refrigeration equipment, or federally-owned comfort cooling appliances have not been successful, the owner or operator must retrofit or retire the equipment in accordance with paragraph (i)(6) and any such longer time period as may apply under paragraphs (i)(7)(i), (ii) and (iii) or (i)(8)(i) and (ii) of this section. The owners and operators of the industrial process refrigeration equipment, federally-owned commercial refrigeration equipment, or federally-owned comfort cooling appliances are relieved of this requirement if the conditions of paragraphs (i)(3)(iv) and/or (i)(3)(v) of this section are met.

(iii) The owner or operator of industrial process refrigeration equipment that fails a follow-up verification test must notify EPA within 30 days of the failed follow-up verification test in accordance with § 82.166(n).

(iv) The owner or operator is relieved of the obligation to retrofit or replace the industrial process refrigeration equipment as discussed in paragraph (i)(6) of this section if second repair efforts to fix the same leaks that were the subject of the first repair efforts are successfully completed within 30 days or 120 days where an industrial process shutdown is required, after the initial failed follow-up verification test. The second repair efforts are subject to the same verification requirements of paragraphs (i)(3), (i)(3) (i) and (ii) of this section. The owner or operator is required to notify EPA within 30 days of the successful follow-up verification test in accordance with § 82.166(n) and the owner or operator is no longer subject to the obligation to retrofit or replace the appliance that arose as a consequence of the initial failure to verify that the leak repair efforts were successful.

(v) The owner or operator of industrial process refrigeration equipment is relieved of the obligation to retrofit or replace the equipment in accordance with paragraph (i)(6) of this section if within 180 days of the initial failed follow-up verification test, the owner or operator establishes that the appliance's annual leak rate does not exceed the applicable allowable annual leak rate, in accordance with paragraph (i)(4) of this section. If the appliance's owner or operator establishes that the appliance's annual leak rate does not exceed the applicable allowable annual leak rate, the owner or operator is required to notify EPA within 30 days of that determination in accordance with § 82.166(n) and the owner or operator would no longer be subject to the obligation to retrofit or replace the equipment that arose as a consequence of the initial failure to verify that the leak repair efforts were successful.

(4) In the case of a failed follow-up verification test subject to paragraph (i)(3)(v) of this section, the determination of whether industrial process refrigeration equipment has an annual leak rate that exceeds the applicable allowable annual leak rate will be made in accordance with parameters identified by the owner or operator in its notice to EPA regarding the failure of the initial follow-up verification

test, if those parameters are acceptable to EPA; otherwise by parameters selected by EPA. The determination must be based on the full charge for the affected industrial process refrigeration equipment. The leak rate determination parameters in the owner's or operator's notice will be considered acceptable unless EPA notifies the owners or operators within 30 days of receipt of the notice. Where EPA does not accept the parameters identified by the owner or operator in its notice, EPA will not provide additional time beyond the additional time permitted in paragraph (i)(3)(v) of this section unless specifically stated in the parameters selected by EPA.

(5) Owners or operators of comfort cooling appliances normally containing more than 50 pounds of refrigerant and not covered by paragraph (i)(1) or (i)(2) of this section must have leaks repaired in accordance with paragraph (i)(9) of this section if the appliance is leaking at a rate such that the loss of refrigerant will exceed 15 percent of the total charge during a 12-month period, except as described in paragraphs (i)(6), (i)(8) and (i)(10) of this section and paragraphs (i)(5)(i), (i)(5)(ii) and (i)(5)(iii) of this section. Repairs must bring the annual leak rate to below 15 percent.

(i) If the owners or operators of federally-owned comfort-cooling appliances determine that the leaks cannot be repaired in accordance with paragraph (i)(9) of this section and that an extension in accordance with the requirements discussed in paragraph (i)(5) of this section apply, they must document all repair efforts, and notify EPA of their inability to comply within the 30-day repair requirement, and the reason for the inability must be submitted to EPA in accordance with § 82.166(n). Such notification must be made within 30 days of discovering that leak repair efforts cannot be completed within 30 days.

(ii) Owners or operators of federally-owned comfort-cooling appliances may have more than 30 days to repair leaks where the refrigeration appliance is located in an area subject to radiological contamination or where the shutting down of the appliance will directly lead to radiological contamination. Only the additional time needed to conduct and complete work in a safe environment will be permitted.

(iii) Owners or operators of federally-owned comfort-cooling appliances requesting, or who are granted, time extensions under this paragraph must comply with paragraphs (i)(3) and (i)(4) of this section.

(6) Owners or operators are not required to repair leaks as provided in paragraphs (i)(1), (i)(2), and (i)(5) of this section if, within 30 days of discovering a leak greater than the applicable allowable leak rate, or within 30 days of a failed follow-up verification test, or after making good faith efforts to repair the leaks as described in paragraph (i)(6)(i) of this section, they develop a one-year retrofit or retirement plan for the leaking appliance. Owners or operators who decide to retrofit the appliance must use a refrigerant or substitute with a lower or equivalent ozone-depleting potential than the previous refrigerant and must include such a change in the retrofit plan. Owners or operators who retire and replace the appliance must replace the appliance with an appliance that uses a refrigerant or substitute with a lower or equivalent ozone-depleting potential and must include such a change in the retirement plan. The retrofit or retirement plan (or a legible copy) must be kept at the site of the appliance. The original plan must be made available for EPA inspection upon request. The plan must be dated, and all work performed in accordance with the plan must be completed within one year of the plan's date, except as described in paragraphs (i)(6)(i), (i)(7), and (i)(8) of this section. Owners or operators are temporarily relieved of this obligation if the appliance has undergone system mothballing as defined in § 82.152.

(i) If the owner or operator has made good faith efforts to repair leaks from the appliance in accordance with paragraphs (i)(1), (i)(2), or (i)(5) of this section and has decided prior to completing a follow-up verification test, to retrofit or retire the appliance in accordance with paragraph (i)(6) of this section, the owner or operator must develop a retrofit or retirement plan within 30 days of the decision to retrofit or retire the appliance. The owner

or operator must complete the retrofit or retirement of the appliance within one year and 30 days of when the owner or operator discovered that the leak rate exceeded the applicable allowable leak rate, except as provided in paragraphs (i)(7) and (i)(8) of this section.

(ii) In all cases, subject to paragraph (i)(6)(i) of this section, the written plan shall be prepared no later than 30 days after the owner or operator has determined to proceed with retrofitting or retiring the appliance. All reports required under § 82.166(o) shall be due at the time specified in the paragraph imposing the specific reporting requirement, or no later than 30 days after the decision to retrofit or retire the appliance, whichever is later.

(iii) In cases where the owner or operator of industrial process refrigeration equipment has made good faith efforts to retrofit or retire industrial process refrigeration equipment prior to August 8, 1995, and where these efforts are not complete, the owner or operator must develop a retrofit or retirement plan that will complete the retrofit or retirement of the affected appliance by August 8, 1996. This plan (or a legible copy) must be kept at the site of the appliance. The original must be made available for EPA inspection upon request. Where the conditions of paragraphs (i)(7) and (i)(8) of this section apply, and where the length of time necessary to complete the work is beyond August 8, 1996, all records must be submitted to EPA in accordance with § 82.166(o), as well as maintained on-site.

(7) The owners or operators of industrial process refrigeration equipment will be allowed additional time to complete the retrofit or retirement of industrial process refrigeration equipment if the conditions described in paragraphs (i)(7)(i) or (i)(7)(ii) of this section are met. The owners or operators of industrial process refrigeration equipment will be allowed additional time beyond the additional time provided in paragraph (i)(7)(ii) of this section if the conditions described in paragraph (i)(7)(iii) of this section are met.

(i) Additional time, to the extent reasonably necessary will be allowed for retrofitting or retiring industrial process refrigeration equipment due to delays occasioned by the requirements of other applicable federal, state, or local laws or regulations, or due to the unavailability of a suitable replacement refrigerant with a lower ozone depletion potential. If these circumstances apply, the owner or operator of the facility must notify EPA within six months after the 30-day period following the discovery of an exceedance of the 35 percent leak rate. Records necessary to allow EPA to determine that these provisions apply and the length of time necessary to complete the work must be submitted to EPA in accordance with § 82.166(o), as well as maintained on-site. EPA will notify the owner or operator of its determination within 60 days of receipt the submittal.

(ii) An additional one-year period beyond the initial one-year retrofit period is allowed for industrial process refrigeration equipment where the following criteria are met:

(A) The new or the retrofitted industrial process refrigerant equipment is custom-built;

(B) The supplier of the appliance or one or more of its critical components has quoted a delivery time of more than 30 weeks from when the order is placed;

(C) The owner or operator notifies EPA within six months of the expiration of the 30-day period following the discovery of an exceedance of the 35 percent leak rate to identify the owner or operator, describe the appliance involved, explain why more than one year is needed, and demonstrate that the first two criteria are met in accordance with § 82.166(o); and

(D) The owner or operator maintains records that are adequate to allow a determination that the criteria are met.

(iii) The owners or operators of industrial process refrigeration equipment may request additional time to complete retrofitting or retiring industrial process refrigeration equipment beyond the additional one-year period if needed and where the initial additional one year was granted in accordance with paragraph (i)(7)(ii) of this section. The request shall be submitted to EPA before the end of the ninth month of the first additional year and

shall include revisions of information required under § 82.166(o). Unless EPA objects to this request submitted in accordance with § 82.166(o) within 30 days of receipt, it shall be deemed approved.

(8) Owners or operators of federally-owned commercial or comfort-cooling appliances will be allowed an additional year to complete the retrofit or retirement of the appliances if the conditions described in paragraph (i)(8)(i) of this section are met, and will be allowed one year beyond the additional year if the conditions in paragraph (i)(8)(ii) of this section are met.

(i) Up to one additional one-year period beyond the initial one-year retrofit period is allowed for such equipment where the following criteria are met:

(A) Due to complications presented by the federal agency appropriations and/or procurement process, a delivery time of more than 30 weeks from the beginning of the official procurement process is quoted, or where the appliance is located in an area subject to radiological contamination and creating a safe working environment will require more than 30 weeks;

(B) The operator notifies EPA within six months of the expiration of the 30-day period following the discovery of an exceedance of the applicable allowable annual leak rate to identify the operator, describe the appliance involved, explain why more than one year is needed, and demonstrate that the first criterion is met in accordance with § 82.166(o); and

(C) The operator maintains records adequate to allow a determination that the criteria are met.

(ii) The owners or operators of federally-owned commercial or comfort-cooling appliances may request additional time to complete retrofitting, replacement or retiring such appliances beyond the additional one-year period if needed and where the initial additional one year was granted in accordance with paragraph (i)(8)(i) of this section. The request shall be submitted to EPA before the end of the ninth month of the first additional year and shall include revisions of information earlier submitted as required under § 82.166(o). Unless EPA objects to this request submitted in accordance with § 82.166(o) within 30 days of receipt, it shall be deemed approved.

(9) Owners or operators must repair leaks pursuant to paragraphs (i)(1), (i)(2) and (i)(5) of this section within 30 days after discovery, or within 30 days after when the leaks should have been discovered if the owners intentionally shielded themselves from information which would have revealed a leak, unless granted additional time pursuant to § 82.156(i).

(10) The amount of time for owners and operators to complete repairs, retrofit plans or retrofits/replacements/retirements under paragraphs (i)(1), (i)(2), (i)(5), (i)(6), (i)(7), (i)(8), and (i)(9) of this section is temporarily suspended at the time an appliance is mothballed as defined in § 82.152. The time for owners and operators to complete repairs, retrofit plans, or retrofits/replacements will resume on the day the appliance is brought back online and is no longer considered mothballed. All initial and follow-up verification tests must be performed in accordance with paragraphs (i)(3), (i)(3)(i), and (i)(3)(ii) of this section.

(11) In calculating annual leak rates, purged refrigerant that is destroyed at a verifiable destruction efficiency of 98 percent or greater will not be counted toward the leak rate. Owners or operators destroying purged refrigerants must maintain information as set forth in § 82.166(p)(1) and submit to EPA, within 60 days after the first time such exclusion is used by that facility, information set forth in § 82.166(p)(2).

[58 FR 28712, May 14, 1993, as amended at 59 FR 42956, 42962, Aug. 19, 1994; 59 FR 55926, Nov. 9, 1994; 60 FR 40440, Aug. 8, 1995; 68 FR 43807, July 24, 2003; 69 FR 11979, Mar. 12, 2004; 70 FR 1991, Jan. 11, 2005]

§ 82.158 Standards for recycling and recovery equipment.

(a) Effective September 22, 2003, all manufacturers and importers of recycling and recovery equipment intended for use during the maintenance, service, or repair of appliances except MVACs and MVAC-like appliances or during the disposal of appliances except small appliances, MVACs, and MVAC-like appliances, shall have had such equipment certified by an approved equipment testing organization

to meet the applicable requirements in paragraph (b)(1), (b)(2), or (d) of this section. All manufacturers and importers of recycling and recovery equipment intended for use during the maintenance, service, or repair of MVAC-like appliances shall have had such equipment certified pursuant to § 82.36(a).

(b) Equipment manufactured or imported on or after November 15, 1993 and before September 22, 2003, for use during the maintenance, service, or repair of appliances except small appliances, MVACs, and MVAC-like appliances or during the disposal of appliances except small appliances, MVACs, and MVAC-like appliances must be certified by an approved equipment testing organization to meet the requirements of paragraph (b)(1) of this section and the following requirements below. Equipment manufactured or imported on or after September 22, 2003, for use during the maintenance, service, or repair of appliances except small appliances, MVACs, and MVAC-like appliances or during the disposal of appliances except small appliances, MVACs, and MVAC-like appliances must be certified by an approved equipment testing organization to meet the requirements of paragraph (b)(2) of this section and the following requirements.

(1) In order to be certified, the equipment must be capable of achieving the level of evacuation specified in Table 2 of this section under the conditions of appendix B1 of this subpart (based upon the ARI Standard 740–1993, Performance of Refrigerant Recovery, Recycling and/or Reclaim Equipment):

TABLE 2—LEVELS OF EVACUATION WHICH MUST BE ACHIEVED BY RECOVERY OR RECYCLING EQUIPMENT INTENDED FOR USE WITH APPLIANCES [1]

[Manufactured on or after November 15, 1993]

Type of appliance with which recovery or recycling machine is intended to be used	Inches of Hg vacuum
HCFC-22 appliances, or isolated component of such appliances, normally containing less than 200 pounds of refrigerant	0
HCFC-22 appliances, or isolated component of such appliances, normally containing 200 pounds or more of refrigerant	10
Very high-pressure appliances	0
Other high-pressure appliances, or isolated component of such appliances, normally containing less than 200 pounds of refrigerant	10
Other high-pressure appliances, or isolated component of such appliances, normally containing 200 pounds or more of refrigerant	15
Low-pressure appliances	[2] 25

[1] Except for small appliances, MVACs, and MVAC-like appliances.
[2] mm Hg absolute.

The vacuums specified in inches of Hg vacuum must be achieved relative to an atmospheric pressure of 29.9 inches of Hg absolute.

(2) In order to be certified, the equipment must be capable of achieving the level of evacuation specified in Table 2 of paragraph (b)(1) of this section under the conditions of appendix B2 of this subpart (based upon the ARI Standard 740–1995, Performance of Refrigerant Recovery, Recycling and/or Reclaim Equipment).

(3) Recovery or recycling equipment whose recovery efficiency cannot be tested according to the procedures in appendix B1 or B2 of this subpart as applicable may be certified if an approved third-party testing organization adopts and performs a test that demonstrates, to the satisfaction of the Administrator, that the recovery efficiency of that equipment is equal to or better than that of equipment that:

(i) Is intended for use with the same type of appliance; and

(ii) Achieves the level of evacuation in Table 2. The manufacturer's instructions must specify how to achieve the required recovery efficiency, and the equipment must be tested when used according to these instructions.

(4) The equipment must meet the minimum requirements for certification under appendix B1 or B2 of this subpart as applicable.

(5) If the equipment is equipped with a noncondensables purge device, the equipment must not release more than three (3) percent of the quantity of refrigerant being recycled through noncondensables purging under the

conditions of appendix B1 and B2 of this subpart as applicable.

(6) The equipment must be equipped with low-loss fittings on all hoses.

(7) The equipment must have its liquid recovery rate and its vapor recovery rate measured under the conditions of appendix B1 or B2 as applicable, unless the equipment has no inherent liquid or vapor recovery rate.

(c) Equipment manufactured or imported before November 15, 1993 for use during the maintenance, service, or repair of appliances except small appliances, MVACs, and MVAC-like appliances or during the disposal of appliances except small appliances, MVACs, and MVAC-like appliances will be considered certified if it is capable of achieving the level of evacuation specified in Table 3 of this section when tested using a properly calibrated pressure gauge:

TABLE 3—LEVELS OF EVACUATION WHICH MUST BE ACHIEVED BY RECOVERY OR RECYCLING MACHINES INTENDED FOR USE WITH APPLIANCES [1]

[Manufactured before November 15, 1993]

Type of air-conditioning or refrigeration equipment with which recovery or recycling machine is intended to be used	Inches of vacuum (relative to standard atmospheric pressure of 29.9 inches Hg)
HCFC-22 equipment, or isolated component of such equipment, normally containing less than 200 pounds of refrigerant	0
HCFC-22 equipment, or isolated component of such equipment, normally containing 200 pounds or more of refrigerant	4
Very high-pressure equipment	0
Other high-pressure equipment, or isolated component of such equipment, normally containing less than 200 pounds of refrigerant	4
Other high-pressure equipment, or isolated component of such equipment, normally containing 200 pounds or more of refrigerant	4
Low-pressure equipment	25

[1] Except for small appliances, MVACs, and MVAC-like appliances.

(d) Equipment manufactured or imported on or after November 15, 1993 and before September 22, 2003, for use during the maintenance, service, or repair of small appliances must be certified by an approved equipment testing organization to be capable of achieving the requirements described in either paragraph (d)(1) or (d)(2) of this section. Equipment manufactured or imported on or after September 22, 2003, for use during the maintenance, service, or repair of small appliances must be certified by an approved equipment testing organization to be capable of either paragraph (d)(1) or (d)(3) of this section:

(1) Recovering 90% of the refrigerant in the test stand when the compressor of the test stand is operating and 80% of the refrigerant when the compressor of the test stand is not operating when used in accordance with the manufacturer's instructions under the conditions of appendix C, Method for Testing Recovery Devices for Use with Small Appliances; or

(2) Achieving a four-inch vacuum under the conditions of appendix B1 of this subpart, based upon ARI Standard 740–1993; or

(3) Achieving a four-inch vacuum under the conditions of appendix B2 of this subpart, based upon ARI Standard 740–1995.

(e) Equipment manufactured or imported before November 15, 1993 for use with small appliances will be considered certified if it is capable of either:

(1) Recovering 80% of the refrigerant in the system, whether or not the compressor of the test stand is operating, when used in accordance with the manufacturer's instructions under the conditions of appendix C, Method for Testing Recovery Devices for Use with Small Appliances; or

(2) Achieving a four-inch vacuum when tested using a properly calibrated pressure gauge.

(f) Equipment manufactured or imported on or after November 15, 1993 for use during the maintenance, service, or repair of MVAC-like appliances must be certified in accordance with § 82.36(a).

(g) Equipment manufactured or imported before November 15, 1993 for use during the maintenance, service, or repair of MVAC-like appliances must be capable of reducing the system pressure to 102 mm of mercury vacuum under the conditions of the SAE Standard, SAE J1990 (appendix A to 40 CFR part 82, subpart B).

(h) Manufacturers and importers of equipment certified under paragraphs (b) and (d) of this section must place a

label on each piece of equipment stating the following:

THIS EQUIPMENT HAS BEEN CERTIFIED BY [APPROVED EQUIPMENT TESTING ORGANIZATION] TO MEET EPA's MINIMUM REQUIREMENTS FOR RECYCLING OR RECOVERY EQUIPMENT INTENDED FOR USE WITH [APPROPRIATE CATEGORY OF APPLIANCE].

The label shall also show the date of manufacture and the serial number (if applicable) of the equipment. The label shall be affixed in a readily visible or accessible location, be made of a material expected to last the lifetime of the equipment, present required information in a manner so that it is likely to remain legible for the lifetime of the equipment, and be affixed in such a manner that it cannot be removed from the equipment without damage to the label.

(i) The Administrator will maintain a list of equipment certified pursuant to paragraphs (b), (d), and (f) of this section by manufacturer and model. Persons interested in obtaining a copy of the list should send written inquiries to the address in § 82.160(a).

(j) Manufacturers or importers of recycling or recovery equipment intended for use during the maintenance, service, or repair of appliances except MVACs or MVAC-like appliances or during the disposal of appliances except small appliances, MVACs, and MVAC-like appliances must periodically have approved equipment testing organizations conduct either:

(1) Retests of certified recycling or recovery equipment in accordance with paragraph (a) of this section or

(2) Inspections of recycling or recovery equipment at manufacturing facilities to ensure that each equipment model line that has been certified under this section continues to meet the certification criteria. Such retests or inspections must be conducted at least once every three years after the equipment is first certified.

(k) An equipment model line that has been certified under this section may have its certification revoked if it is subsequently determined to fail to meet the certification criteria. In such cases, the Administrator or her or his designated representative shall give notice to the manufacturer or importer setting forth the basis for her or his determination.

(l) Equipment used to evacuate refrigerant from MVACs and MVAC-like appliances before they are disposed of must be certified in accordance with § 82.36(a).

(m) Equipment used to evacuate refrigerant from small appliances before they are disposed of must be capable of either:

(1) Removing 90% of the refrigerant when the compressor of the small appliance is operating and 80% of the refrigerant when the compressor of the small appliance is not operating, when used in accordance with the manufacturer's instructions under the conditions of appendix C, Method for Testing Recovery Devices for Use With Small Appliances; or

(2) Evacuating the small appliance to four inches of vacuum when tested using a properly calibrated pressure gauge.

(n) Effective October 22, 2003, equipment that is advertised or marketed as ''recycling equipment'' must be capable of recycling the standard contaminated refrigerant sample of appendix B2 of this subpart (based upon ARI Standard 740–1995), section 5, to the levels in the following table when tested under the conditions of appendix B2 of this subpart:

MAXIMUM LEVELS OF CONTAMINANTS PERMISSIBLE IN REFRIGERANT PROCESSED THROUGH EQUIPMENT ADVERTISED AS "RECYCLING" EQUIPMENT

Contaminants	Low-pressure (R–11, R–123, R–113) systems	R–12 systems	All other systems
Acid Content (by wt.)	1.0 PPM	1.0 PPM	1.0 PPM.
Moisture (by wt.)	20 PPM	10 PPM	20 PPM.
Noncondensable Gas (by vol.)	N/A	2.0%	2.0%.
High Boiling Residues (by vol.)	1.0%	0.02%	0.02%.
Chlorides by Silver Nitrate Test	No turbidity	No turbidity	No turbidity.
Particulates	Visually clean	Visually clean	Visually clean.

[58 FR 28712, May 14, 1993, as amended at 59 FR 42957, Aug. 19, 1994; 68 FR 43807, July 24, 2003; 73 FR 34649, June 18, 2008]

§ 82.160 Approved equipment testing organizations.

(a) Any equipment testing organization may apply for approval by the Administrator to certify equipment pursuant to the standards in § 82.158 and appendices B2 or C of this subpart. The application shall be mailed to: Section 608 Recycling Program Manager; Global Programs Division; Mail Code: 6205J; U.S. Environmental Protection Agency; 1200 Pennsylvania Avenue, NW.; Washington, DC 20460.

(b) Applications for approval must include written information verifying the following:

(1) The list of equipment present at the organization that will be used for equipment testing.

(2) Expertise in equipment testing and the technical experience of the organization's personnel.

(3) Thorough knowledge of the standards and recordkeeping and reporting requirements as they appear in §§ 82.158 and 82.166 and Appendices B2 and/or C (as applicable) of this subpart.

(4) The organization must describe its program for verifying the performance of certified recycling and recovery equipment manufactured over the long term, specifying whether retests of equipment or inspections of equipment at manufacturing facilities will be used.

(5) The organization must have no conflict of interest and receive no direct or indirect financial benefit from the outcome of certification testing.

(6) The organization must agree to allow the Administrator access to records and personnel to verify the information contained in the application.

(c) Organizations may not certify equipment prior to receiving approval from EPA. If approval is denied under this section, the Administrator or her or his designated representative shall give written notice to the organization setting forth the basis for her or his determination.

(d) If at any time an approved testing organization is found to be conducting certification tests for the purposes of this subpart in a manner not consistent with the representations made in its application for approval under this section, the Administrator reserves the right to revoke approval in accordance with § 82.169. In such cases, the Administrator or her or his designated representative shall give notice to the organization setting forth the basis for her or his determination.

[58 FR 28712, May 14, 1993, as amended at 59 FR 42962, Aug. 19, 1994; 68 FR 43808, July 24, 2003]

§ 82.161 Technician certification.

(a) Effective November 14, 1994, technicians, except technicians who successfully completed voluntary certification programs that apply for approval under § 82.161(g) by December 9, 1994, must be certified by an approved technician certification program under the requirements of this paragraph (a). Effective May 15, 1995, all technicians must be certified by an approved technician certification program under the requirements of this paragraph (a).

(1) Technicians, as defined in § 82.152, who maintain, service, or repair small appliances must be properly certified as Type I technicians.

(2) Technicians who maintain, service, or repair medium-, high-, or very high-pressure appliances, except small appliances, MVACs, and MVAC-like appliances, or dispose of medium-, high-, or very high-pressure appliances, except small appliances, MVACs, and MVAC-like appliances, must be properly certified as Type II technicians.

(3) Technicians who maintain, service, or repair low-pressure appliances or dispose of low-pressure appliances must be properly certified as Type III technicians.

(4) Technicians who maintain, service, or repair low- and high-pressure equipment as described in § 82.161(a) (1), (2) and (3) must be properly certified as Universal technicians.

(5) Technicians who maintain, service, or repair MVAC-like appliances must either be properly certified as Type II technicians or complete the training and certification test offered

by a training and certification program approved under § 82.40.

(6) Apprentices are exempt from this requirement provided the apprentice is closely and continually supervised by a certified technician while performing any maintenance, service, repair, or disposal that could reasonably be expected to release refrigerant from appliances into the environment. The supervising certified technician is responsible for ensuring that the apprentice complies with this subpart.

(b) *Test Subject Material*. The Administrator shall maintain a bank of test questions divided into four groups, including a core group and three technical groups. The Administrator shall release this bank of questions only to approved technician certification programs. Tests for each type of certification shall include a minimum of 25 questions drawn from the core group and a minimum of 25 questions drawn from each relevant technical group. These questions shall address the subject areas listed in appendix D.

(c) *Program Approval*. Persons may seek approval of any technician certification program (program), in accordance with the provisions of this paragraph, by submitting to the Administrator at the address in § 82.160(a) verification that the program meets all of the standards listed in appendix D and the following standards:

(1) *Alternative Examinations*. Programs are encouraged to make provisions for non-English speaking technicians by providing tests in other languages or allowing the use of a translator when taking the test. If a translator is used, the certificate received must indicate that translator assistance was required. A test may be administered orally to any person who makes this request, in writing, to the program at least 30 days before the scheduled date for the examination. The letter must explain why the request is being made.

(2) *Recertification*. The Administrator reserves the right to specify the need for technician recertification at some future date, if necessary, by placing a notice in the FEDERAL REGISTER.

(3) *Proof of Certification*. Programs must issue individuals a wallet-sized card to be used as proof of certification, upon successful completion of the test. Programs must issue an identification card to technicians that receive a score of 70 percent or higher on the closed-book certification exam, within 30 days. Programs providing Type I certification using the mail-in format, must issue a permanent identification card to technicians that receive a score of 84 percent or higher on the certification exam, no later than 30 days after the program has received the exam and any additional required material. Each card must include, at minimum, the name of the certifying program, and the date the organization became a certifying program, the name of the person certified, the type of certification, a unique number for the certified person, and the following text:

[Name of person] has been certified as a [Type I, Type II, Type III, and/or Universal, as appropriate] technician as required by 40 CFR part 82, subpart F.

(4) The Administrator reserves the right to consider other factors deemed relevant to ensure the effectiveness of certification programs.

(d) If approval is denied under this section, the Administrator shall give written notice to the program setting forth the basis for her or his determination.

(e) If at any time an approved program violates any of the above requirements, the Administrator reserves the right to revoke approval in accordance with § 82.169. In such cases, the Administrator or her or his designated representative shall give notice to the organization setting forth the basis for her or his determination.

(f) Authorized representatives of the Administrator may require technicians to demonstrate on the business entity's premises their ability to perform proper procedures for recovering and/or recycling refrigerant. Failure to demonstrate or failure to properly use the equipment may result in revocation of the certificate. Failure to abide by any of the provisions of this subpart may also result in revocation or suspension of the certificate. If a technician's certificate is revoked, the technician would need to recertify before maintaining, servicing, repairing or disposing of any appliances.

(g)(1) Any person seeking approval of a technician certification program may also seek approval to certify technicians who successfully completed a voluntary certification program operated previously by that person. Interested persons must submit to the Administrator at the address in § 82.160(a) verification that the voluntary certification program substantially complied with most of the standards of § 82.161(c) and appendix D of subpart F of this part. If the program did not test or train participants on some elements of the test subject material, the person must submit supplementary information on the omitted material to the Administrator for approval and verify that the approved information will be provided to technicians pursuant to section j of appendix D of subpart F of this part. In this case, the person may not issue a certification card to a technician until he or she has received a signed statement from the technician indicating that the technician has read the supplementary information. Approval may be granted for Type I, Type II, or Type III certification, or some combination of these, depending upon the coverage in the voluntary certification program of the information in each Type. In order to have their voluntary programs considered for approval, persons must submit applications both for approval as a technician certification program and for approval as a voluntary program by December 9, 1994.

(2)(i) Persons who are approved to certify technicians who successfully completed their voluntary programs pursuant to § 82.161(g)(1) must:

(A) Notify technicians who successfully completed their voluntary programs of the Administrator's decision within 60 days of that decision;

(B) Send any supplementary materials required pursuant to § 82.161(g)(1) to technicians who successfully completed their voluntary programs within 60 days of the Administrator's decision; and

(C) Send certification cards to technicians who successfully completed their voluntary programs within 60 days of receipt of signed statements from the technicians indicating that the technicians have read the supplementary information.

(ii) Persons who are disapproved to certify technicians who successfully completed their voluntary programs pursuant to § 82.161(g)(1) must notify technicians who successfully completed their voluntary programs of the Administrator's decision within 30 days of that decision.

(iii) Persons who withdraw applications for voluntary program approval submitted pursuant to § 82.161(g)(1) must inform technicians who successfully completed their voluntary programs of the withdrawal by the later of 30 days after the withdrawal or December 9, 1994.

(3) Technicians who successfully completed voluntary certification programs may receive certification in a given Type through that program only if:

(i) The voluntary certification program successfully completed by the technician is approved for that Type pursuant to § 82.161(g)(1);

(ii) The technician successfully completed the portions of the voluntary certification program that correspond to that Type; and

(iii) The technician reads any supplementary materials required by the Administrator pursuant to § 82.161(g)(1) and section j of appendix D of subpart F of this part, and returns the signed statement required by § 82.161(g)(1).

[58 FR 28712, May 14, 1993, as amended at 59 FR 42957, 42962, Aug. 19, 1994; 68 FR 43808, July 24, 2003; 69 FR 11980, Mar. 12, 2004]

§ 82.162 Certification by owners of recovery and recycling equipment.

(a) No later than August 12, 1993, or within 20 days of commencing business for those persons not in business at the time of promulgation, persons maintaining, servicing, or repairing appliances except for MVACs, and persons disposing of appliances except for small appliances and MVACs, must certify to the Administrator that such person has acquired certified recovery or recycling equipment and is complying with the applicable requirements of this subpart. Such equipment may include system-dependent equipment but must include self-contained equipment, if the

equipment is to be used in the maintenance, service, or repair of appliances except for small appliances. The owner or lessee of the recovery or recycling equipment may perform this certification for his or her employees. Certification shall take the form of a statement signed by the owner of the equipment or another responsible officer and setting forth:

(1) The name and address of the purchaser of the equipment, including the county name;

(2) The name and address of the establishment where each piece of equipment is or will be located;

(3) The number of service trucks (or other vehicles) used to transport technicians and equipment between the establishment and job sites and the field;

(4) The manufacturer name, the date of manufacture, and if applicable, the model and serial number of the equipment; and

(5) The certification must also include a statement that the equipment will be properly used in servicing or disposing of appliances and that the information given is true and correct. Owners or lessees of recycling or recovery equipment having their places of business in: Connecticut, Maine, Massachusetts, New Hampshire, Rhode Island, and Vermont must send their certifications to: CAA section 608 Enforcement Contact; EPA Region I; Mail Code OES04–5; 5 Post Office Square—Suite 100, Boston, MA 02109–3912.

Owners or lessees of recycling or recovery equipment having their places of business in:

New York
New Jersey
Puerto Rico
Virgin Islands

must send their certifications to:

CAA section 608 Enforcement Contact; EPA Region II (2DECA-AC); 290 Broadway, 21st Floor; New York, NY 10007–1866.

Owners or lessees of recycling or recovery equipment having their places of business in:

Delaware
District of Columbia
Maryland
Pennsylvania
Virginia
West Virginia

must send their certifications to:

CAA section 608 Enforcement Contact; EPA Region III—Wheeling Operations Office; Mail Code 3AP12; 303 Methodist Building; 11th and Chapline Streets; Wheeling, WV 26003.

Owners or lessees of recycling or recovery equipment having their places of business in:

Alabama
Florida
Georgia
Kentucky
Mississippi
North Carolina
South Carolina
Tennessee

must send their certifications to:

CAA section 608 Enforcement Contact; EPA Region IV(APT-AE); Atlanta Federal Center; 61 Forsyth Street, SW.; Atlanta, GA 30303.

Owners or lessees of recycling or recovery equipment having their places of business in:

Illinois
Indiana
Michigan
Minnesota
Ohio
Wisconsin

must send their certifications to:

CAA section 608 Enforcement Contact, EPA Region V (AE17J); 77 West Jackson Blvd.; Chicago, IL 60604–3507.

Owners or lessees of recycling or recovery equipment having their places of business in:

Arkansas
Louisiana
New Mexico
Oklahoma
Texas

must send their certifications to:

CAA section 608 Enforcement Contact; EPA Region VI (6EN-AA); 1445 Ross Avenue, Suite 1200; Dallas, Texas 75202.

Owners or lessees of recycling or recovery equipment having their places of business in:

Iowa
Kansas
Missouri
Nebraska

must send their certifications to:

CAA section 608 Enforcement Contact; EPA Region VII; Mail Code APCO/ARTD; 901 North 5th Street; Kansas City, KS; 66101.

Owners or lessees of recycling or recovery equipment having their places of business in:

Colorado
Montana
North Dakota
South Dakota
Utah
Wyoming

must send their certifications to:

CAA section 608 Enforcement Contact, EPA Region VIII, Mail Code 8ENF-T, 999 18th Street, Suite 500, Denver, CO 80202–2466.

Owners or lessees of recycling or recovery equipment having their places of business in:

American Samoa
Arizona
California
Guam
Hawaii
Nevada

must send their certifications to:

CAA section 608 Enforcement Contact; EPA Region IX; Mail Code AIR–5; 75 Hawthorne Street; San Francisco, CA 94105.

Owners or lessees of recycling or recovery equipment having their places of business in:

Alaska
Idaho
Oregon
Washington

must send their certifications to:

CAA section 608 Enforcement Contact; EPA Region X (OAQ–107); 1200 Sixth Avenue; Seattle, WA 98101.

(b) Certificates under paragraph (a) of this section are not transferable. In the event of a change of ownership of an entity that maintains, services, or repairs appliances except MVACs, or that disposes of appliances except small appliances, MVACs, and MVAC-like appliances, the new owner of the entity shall certify within 30 days of the change of ownership pursuant to paragraph (a) of this section.

(c) No later than August 12, 1993, persons recovering refrigerant from small appliances, MVACs, and MVAC-like appliances for purposes of disposal of these appliances must certify to the Administrator that such person has acquired recovery equipment that meets the standards set forth in § 82.158 (l) and/or (m), as applicable, and that such person is complying with the applicable requirements of this subpart. Such equipment may include system-dependent equipment but must include self-contained equipment, if the equipment is to be used in the disposal of appliances except for small appliances. The owner or lessee of the recovery or recycling equipment may perform this certification for his or her employees. Certification shall take the form of a statement signed by the owner of the equipment or another responsible officer and setting forth:

(1) The name and address of the purchaser of the equipment, including the county name;

(2) The name and address of the establishment where each piece of equipment is or will be located;

(3) The number of service trucks (or other vehicles) used to transport technicians and equipment between the establishment and job sites and the field;

(4) The manufacturer's name, the date of manufacture, and if applicable, the model and serial number of the equipment; and

(5) The certification must also include a statement that the equipment will be properly used in recovering refrigerant from appliances and that the information given is true and correct. The certification shall be sent to the appropriate address in paragraph (a).

(d) Failure to abide by any of the provisions of this subpart may result in revocation or suspension of certification under paragraph (a) or (c) of this section. In such cases, the Administrator or her or his designated representative shall give notice to the organization setting forth the basis for her or his determination.

[58 FR 28712, May 14, 1993, as amended at 59 FR 42962, Aug. 19, 1994; 69 FR 11980, Mar. 12, 2004; 76 FR 49673, Aug. 11, 2011]

§ 82.164 Reclaimer certification.

Effective May 11, 2004, all persons reclaiming used refrigerant for sale to a new owner, except for persons who properly certified under this section prior to May 11, 2004, must certify to the Administrator that such person will:

(a) Reprocess refrigerant to all of the specifications in Appendix A of this subpart (based on ARI Standard 700–1995, *Specification for Fluorocarbons and*

Other Refrigerants) that are applicable to that refrigerant;

(b) Verify that the refrigerant meets these specifications using the analytical methodology prescribed in Appendix A, which includes the primary methodologies included in the appendix to the ARI Standard 700–1995;

(c) Release no more than 1.5 percent of the refrigerant during the reclamation process; and

(d) Dispose of wastes from the reclamation process in accordance with all applicable laws and regulations.

(e) The data elements for certification are as follows:

(1) The name and address of the reclaimer;

(2) A list of equipment used to reprocess and analyze the refrigerant; and

(3) The owner or a responsible officer of the reclaimer must sign the certification stating that the refrigerant will be reprocessed to all of the specifications in Appendix A of this subpart (based on ARI Standard 700–1995, *Specification for Fluorocarbons and Other Refrigerants*) that are applicable to that refrigerant, that the refrigerant's conformance to these specifications will be verified using the analytical methodology prescribed in Appendix A (which includes the primary methodologies included in the appendix to the ARI Standard 700–1995), that no more than 1.5 percent of the refrigerant will be released during the reclamation process, that wastes from the reclamation process will be properly disposed of, that the owner or responsible officer of the reclaimer will maintain records and submit reports in accordance with § 82.166(g) and (h), and that the information given is true and correct. The certification should be sent to the following address: U.S. Environmental Protection Agency; Global Programs Division (6205J); 1200 Pennsylvania Avenue, NW., Washington, DC 20460; Attn: Section 608 Recycling Program Manager—Reclaimer Certification.

(f) Certificates are not transferable. In the event of a change in ownership of an entity which reclaims refrigerant, the new owner of the entity shall certify within 30 days of the change of ownership pursuant to this section.

(g) Failure to abide by any of the provisions of this subpart may result in revocation or suspension of the certification of the reclaimer in accordance with § 82.169. In such cases, the Administrator or her or his designated representative shall give notice to the organization setting forth the basis for her or his determination.

[58 FR 28712, May 14, 1993, as amended at 59 FR 42957, 42962, Aug. 19, 1994; 59 FR 55927, Nov. 9, 1994; 68 FR 43809, July 24, 2003; 69 FR 11980, Mar. 12, 2004]

§ 82.166 Reporting and recordkeeping requirements.

(a) All persons who sell or distribute or offer to sell or distribute any refrigerant must retain invoices that indicate the name of the purchaser, the date of sale, and the quantity of refrigerant purchased.

(b) Purchasers of refrigerant who employ certified technicians may provide evidence that at least one technician is properly certified to the wholesaler who sells them refrigerant; the wholesaler must then keep this information on file and may sell refrigerant to the purchaser or his authorized representative even if such purchaser or authorized representative is not a properly certified technician. In such cases, the purchaser must notify the wholesaler in the event that the purchaser no longer employs at least one properly certified technician. The wholesaler is then prohibited from selling refrigerants to the purchaser until such time as the purchaser employs at least one properly certified technician. At that time, the purchaser must provide new evidence that at least one technician is properly certified.

(c) Approved equipment testing organizations must maintain records of equipment testing and performance and a list of equipment that meets EPA requirements. A list of all certified equipment shall be submitted to EPA within 30 days of the organization's approval by EPA and annually at the end of each calendar year thereafter.

(d) Approved equipment testing organizations shall submit to EPA within 30 days of the certification of a new model line of recycling or recovery

equipment the name of the manufacturer and the name and/or serial number of the model line.

(e) Approved equipment testing organizations shall notify EPA if retests of equipment or inspections of manufacturing facilities conducted pursuant to § 82.158(j) show that a previously certified model line fails to meet EPA requirements. Such notification must be received within thirty days of the retest or inspection.

(f) Programs certifying technicians must maintain records in accordance with section (g) of appendix D of this subpart.

(g) Reclaimers must maintain records of the names and addresses of persons sending them material for reclamation and the quantity of the material (the combined mass of refrigerant and contaminants) sent to them for reclamation. Such records shall be maintained on a transactional basis.

(h) Reclaimers must maintain records of the quantity of material sent to them for reclamation, the mass of refrigerant reclaimed, and the mass of waste products. Reclaimers must report this information to the Administrator annually within 30 days of the end of the calendar year.

(i) Persons disposing of small appliances, MVACs, and MVAC-like appliances must maintain copies of signed statements obtained pursuant to § 82.156(f)(2).

(j) Persons servicing appliances normally containing 50 or more pounds of refrigerant must provide the owner/operator of such appliances with an invoice or other documentation, which indicates the amount of refrigerant added to the appliance.

(k) Owners/operators of appliances normally containing 50 or more pounds of refrigerant must keep servicing records documenting the date and type of service, as well as the quantity of refrigerant added. The owner/operator must keep records of refrigerant purchased and added to such appliances in cases where owners add their own refrigerant. Such records should indicate the date(s) when refrigerant is added.

(l) Technicians certified under § 82.161 must keep a copy of their certificate at their place of business.

(m) All records required to be maintained pursuant to this section must be kept for a minimum of three years unless otherwise indicated. Entities that dispose of appliances must keep these records on-site.

(n) The owners or operators of appliances must maintain on-site and report to EPA Headquarters at the address listed in § 82.160 the information specified in paragraphs (n)(1), (n)(2), and (n)(3) of this section, within the timelines specified under § 82.156 (i)(1), (i)(2), (i)(3) and (i)(5) where such reporting or recordkeeping is required. This information must be relevant to the affected appliance.

(1) An initial report to EPA under § 82.156(i)(1)(i), (i)(2), or (i)(5)(i) regarding why more than 30 days are needed to complete repairs must include: Identification of the facility; the leak rate; the method used to determine the leak rate and full charge; the date a leak rate above the applicable leak rate was discovered; the location of leak(s) to the extent determined to date; any repair work that has been completed thus far and the date that work was completed; the reasons why more than 30 days are needed to complete the work and an estimate of when the work will be completed. If changes from the original estimate of when work will be completed result in extending the completion date from the date submitted to EPA, the reasons for these changes must be documented and submitted to EPA within 30 days of discovering the need for such a change.

(2) If the owners or operators intend to establish that the appliance's leak rate does not exceed the applicable allowable leak rate in accordance with § 82.156(i)(3)(v), the owner or operator must submit a plan to fix other outstanding leaks for which repairs are planned but not yet completed to achieve a rate below the applicable allowable leak rate. A plan to fix other outstanding leaks in accordance with § 82.156(i)(3)(v) must include the following information: The identification of the facility; the leak rate; the method used to determine the leak rate and full charge; the date a leak rate above the applicable allowable leak rate was discovered; the location of leak(s) to the extent determined to date; and any

repair work that has been completed thus far, including the date that work was completed. Upon completion of the repair efforts described in the plan, a second report must be submitted that includes the date the owner or operator submitted the initial report concerning the need for additional time beyond the 30 days and notification of the owner or operator's determination that the leak rate no longer exceeds the applicable allowable leak rate. This second report must be submitted within 30 days of determining that the leak rate no longer exceeds the applicable allowable leak rate.

(3) Owners or operators must maintain records of the dates, types, and results of all initial and follow-up verification tests performed under § 82.156(i)(3). Owners or operators must submit this information to EPA within 30 days after conducting each test only where required under § 82.156 (i)(1), (i)(2), (i)(3) and (i)(5). These reports must also include: Identification and physical address of the facility; the leak rate; the method used to determine the leak rate and full charge; the date a leak rate above the applicable allowable leak rate was discovered; the location of leak(s) to the extent determined to date; and any repair work that has been completed thus far and the date that work was completed. Submitted reports must be dated and include the name of the owner or operator of the appliance, and must be signed by an authorized company official.

(o) The owners or operators of appliances must maintain on-site and report to EPA at the address specified in § 82.160 the following information where such reporting and recordkeeping is required and in the timelines specified in § 82.156 (i)(7) and (i)(8), in accordance with § 82.156 (i)(7) and (i)(8). This information must be relevant to the affected appliance and must include:

(1) The identification of the industrial process facility;

(2) The leak rate;

(3) The method used to determine the leak rate and full charge;

(4) The date a leak rate above the applicable allowable rate was discovered.

(5) The location of leaks(s) to the extent determined to date;

(6) Any repair work that has been completed thus far and the date that work was completed;

(7) A plan to complete the retrofit or retirement of the system;

(8) The reasons why more than one year is necessary to retrofit or retire the system;

(9) The date of notification to EPA; and

(10) An estimate of when retrofit or retirement work will be completed. If the estimated date of completion changes from the original estimate and results in extending the date of completion, the owner or operator must submit to EPA the new estimated date of completion and documentation of the reason for the change within 30 days of discovering the need for the change, and must retain a dated copy of this submission.

(p)(1) Owners or operators who wish to exclude purged refrigerants that are destroyed from annual leak rate calculations must maintain records on-site to support the amount of refrigerant claimed as sent for destruction. Records shall be based on a monitoring strategy that provides reliable data to demonstrate that the amount of refrigerant claimed to have been destroyed is not greater than the amount of refrigerant actually purged and destroyed and that the 98 percent or greater destruction efficiency is met. Records shall include flow rate, quantity or concentration of the refrigerant in the vent stream, and periods of purge flow.

(2) Owners or operators who wish to exclude purged refrigerants that are destroyed from annual leak rate calculations must maintain on-site and make available to EPA upon request the following information after the first time the exclusion is utilized by the facility:

(i) The identification of the facility and a contact person, including the address and telephone number;

(ii) A general description of the refrigerant appliance, focusing on aspects of the appliance relevant to the purging of refrigerant and subsequent destruction;

(iii) A description of the methods used to determine the quantity of refrigerant sent for destruction and type of records that are being kept by the

owners or operators where the appliance is located;

(iv) The frequency of monitoring and data-recording; and

(v) A description of the control device, and its destruction efficiency.

This information must also be included, where applicable, in any reporting requirements required for compliance with the leak repair and retrofit requirements for industrial process refrigeration equipment, as set forth in paragraphs (n) and (o) of this section.

(q) Owners or operators choosing to determine the full charge as defined in § 82.152 of an affected appliance by using an established range or using that methodology in combination with other methods for determining the full charge as defined in § 82.152 must maintain the following information:

(1) The identification of the owner or operator of the appliance;

(2) The location of the appliance;

(3) The original range for the full charge of the appliance, its midpoint, and how the range was determined;

(4) Any and all revisions of the full charge range and how they were determined; and

(5) The dates such revisions occurred.

[58 FR 28712, May 14, 1993, as amended at 59 FR 42957, Aug. 19, 1994; 60 FR 40443, Aug. 8, 1995; 69 FR 11981, Mar. 12, 2004; 70 FR 1992, Jan. 11, 2005]

§ 82.169 Suspension and revocation procedures.

(a) Failure to abide by any of the provisions of this subpart may result in the revocation or suspension of the approval to certify technicians (under § 82.161), approval to act as a recovery/recycling equipment testing organization (under § 82.160), or reclaimer certification (under § 82.164), hereafter referred to as the ''organization.'' In such cases, the Administrator or her or his designated representative shall give notice of an impending suspension to the person or organization setting forth the facts or conduct that provide the basis for the revocation or suspension.

(b) Any organization that has received notice of an impending suspension or revocation may choose to request a hearing and must file that request in writing within 30 days of the date of the Agency's notice at the address listed in § 82.160 and shall set forth their objections to the revocation or suspension and data to support the objections.

(c) If the Agency does not receive a written request for a hearing within 30 days of the date of the Agency's notice, the revocation will become effective upon the date specified in the notice of an impending suspension.

(d) If after review of the request and supporting data, the Administrator or her or his designated representative finds that the request raises a substantial factual issue, she or he shall provide the organization with a hearing.

(e) After granting a request for a hearing the Administrator or her or his designated representative shall designate a Presiding Officer for the hearing.

(f) The hearing shall be held as soon as practicable at a time and place determined by the Administrator, the designated representative, or the Presiding Officer.

(g) The Administrator or her or his designated representative may, at his or her discretion, direct that all argument and presentation of evidence be concluded within a specified period established by the Administrator or her or his designated representative. Said period may be no less than 30 days from the date that the first written offer of a hearing is made to the applicant. To expedite proceedings, the Administrator or her or his designated representative may direct that the decision of the Presiding Officer (who need not be the Administrator) shall be the final EPA decision.

(h) Upon appointment pursuant to paragraph (e) of this section, the Presiding Officer will establish a hearing file. The file shall consist of the following:

(1) The notice issued by the Administrator under § 82.169(a);

(2) the request for a hearing and the supporting data submitted therewith;

(3) all documents relating to the request for certification and all documents submitted therewith; and

(4) correspondence and other data material to the hearing.

(i) The hearing file will be available for inspection by the petitioner at the office of the Presiding Officer.

(j) An applicant may appear in person or may be represented by counsel or by any other duly authorized representative.

(k) The Presiding Officer, upon the request of any party or at his or her discretion, may arrange for a pre-hearing conference at a time and place he or she specifies. Such pre-hearing conferences will consider the following:

(1) Simplification of the issues;

(2) Stipulations, admissions of fact, and the introduction of documents;

(3) Limitation of the number of expert witnesses;

(4) Possibility of agreement disposing of any or all of the issues in dispute; and

(5) Such other matters as may aid in the disposition of the hearing, including such additional tests as may be agreed upon by the parties.

(l) The results of the conference shall be reduced to writing by the Presiding Officer and made part of the record.

(m) Hearings shall be conducted by the Presiding Officer in an informal but orderly and expeditious manner. The parties may offer oral or written evidence, subject to the exclusion by the Presiding Officer of irrelevant, immaterial, and repetitious evidence.

(n) Witnesses will not be required to testify under oath. However, the Presiding Officer shall call to the attention of witnesses that their statements may be subject to the provisions of 18 U.S.C. 1001, which imposes penalties for knowingly making false statements or representations or using false documents in any matter within the jurisdiction of any department or agency of the United States.

(o) Any witness may be examined or cross-examined by the Presiding Officer, the parties, or their representatives.

(p) Hearings shall be reported verbatim. Copies of transcripts of proceedings may be purchased by the petitioner from the reporter.

(q) All written statements, charts, tabulations, and similar data offered in evidence at the hearings shall, upon a showing satisfactory to the Presiding Officer of their authenticity, relevancy, and materiality, be received in evidence and shall constitute a part of the record.

(r) Oral argument may be permitted at the discretion of the Presiding Officer and shall be reported as part of the record unless otherwise ordered by the Presiding Officer.

(s) The Presiding Officer shall make an initial decision that shall include written findings and conclusions and the reasons or basis regarding all the material issues of fact, law, or discretion presented on the record. The findings, conclusions, and written decision shall be provided to the parties and made a part of the record. The initial decision shall become the decision of the Administrator without further proceedings, unless there is an appeal to the Administrator or motion for review by the Administrator within 20 days of the date the initial decision was filed.

(t) On appeal from or review of the initial decision, the Administrator or her or his designated representative shall have all the powers which he or she would have in making the initial decision, including the discretion to require or allow briefs, oral argument, the taking of additional evidence, or a remand to the Presiding Officer for additional proceedings. The decision by the Administrator or her or his designated representative shall include written findings and conclusions and the reasons or basis therefore on all the material issues of fact, law, or discretion presented on the appeal or considered in the review.

[68 FR 43809, July 24, 2003]

APPENDIX A TO SUBPART F OF PART 82—SPECIFICATIONS FOR FLUOROCARBON AND OTHER REFRIGERANTS

This appendix is based on the Air-Conditioning and Refrigeration Institute Standard 700–1995.

Section 1. Purpose

1.1 *Purpose.* The purpose of this standard is to evaluate and accept/reject refrigerants regardless of source (*i.e.,* new, reclaimed and/or repackaged) for use in new and existing refrigeration and air-conditioning products as required under 40 CFR part 82.

1.1.1 *Intent*. This standard is intended for the guidance of the industry including manufacturers, refrigerant reclaimers, repackagers, distributors, installers, servicemen, contractors and for consumers.

1.1.2 *Review and Amendment*. This standard is subject to review and amendment as the technology advances.

Section 2. Scope

2.1 *Scope*. This standard specifies acceptable levels of contaminants (purity requirements) for various fluorocarbon and other refrigerants regardless of source and lists acceptable test methods. These refrigerants are R–113; R–123; R–11; R–114; R–124; R–12; R–401C; R–406A; R–500; R–401A; R–409A; R–401B; R–411A; R–22; R–411B; R–502; R–402B; R–408A; R–402A; R–13; R–503 as referenced in the ANSI/ASHRAE Standard 34–1992. (American Society of Heating, Refrigerating and Air-conditioning Engineers, Inc., Standard 34–1992). Copies may be obtained from ASHRAE Publications Sales, 1791 Tullie Circle, NE, Atlanta, GA 30329. Copies may also be inspected at Environmental Protection Agency; Office of Air and Radiation Docket; 1301 Constitution Ave., NW., Room B108; Washington, DC 20460.

Section 3. Definitions

3.1 *''Shall,'' ''Should,'' ''Recommended,''* or *''It Is Recommended.''* ''Shall,'' ''should,'' ''recommended,'' or ''it is recommended'' shall be interpreted as follows:

3.1.1 *Shall*. Where ''shall'' or ''shall not'' is used for a provision specified, that provision is mandatory if compliance with the appendix is claimed.

3.1.2 *Should, Recommended*, or *It is Recommended*. ''Should'', ''recommended'', or ''it is recommended'' is used to indicate provisions which are not mandatory but which are desirable as good practice.

Section 4. Characterization of Refrigerants and Contaminants

4.1 *Characterization*. Characterization of refrigerants and contaminants addressed are listed in the following general classifications:

4.1.1 *Characterization*

a. Gas Chromatography

b. Boiling point and boiling point range

4.1.2 *Contaminants*

a. Water

b. Chloride

c. Acidity

d. High boiling residue

e. Particulates/solids

f. Non-condensables

g. Impurities including other refrigerants

Section 5. Sampling, Summary of Test Methods and Maximum Permissible Contaminant Levels

5.1 *Referee Test*. The referee test methods for the various contaminants are summarized in the following paragraphs. Detailed test procedures are included in *Appendix C to ARI Standard 700–1995: Analytical Procedures for ARI Standard 700–1995*, 1995, Air-Conditioning and Refrigeration Institute. *Appendix C to ARI Standard 700–1995* is incorporated by reference. [This incorporation by reference was approved by the Director of the Federal Register in accordance with 5 U.S.C. 552(a) and 1 CFR part 51. Copies may be obtained from the Air-Conditioning and Refrigeration Institute, 4301 North Fairfax Drive, Arlington, Virginia 22203. Copies may also be inspected at Public Docket No. A–92–01, Environmental Protection Agency, 1301 Constitution Ave., NW., Washington, DC, 20460 or at the Office of the Federal Register, 800 North Capitol Street, NW., Suite 700, Washington, DC.] If alternative test methods are employed, the user must be able to demonstrate that they produce results equivalent to the specified referee method.

5.2 *Refrigerant Sampling*

5.2.1 *Sampling Precautions*. Special precautions should be taken to assure that representative samples are obtained for analysis. Sampling shall be done by trained laboratory personnel following accepted sampling and safety procedures.

5.2.2 *Gas Phase Sample*. A gas phase sample shall be obtained for determining the non-condensables. Since non-condensable gases, if present, will concentrate in the vapor phase of the refrigerant, care must be exercised to eliminate introduction of air during the sample transfer. Purging is not an acceptable procedure for a gas phase sample since it may introduce a foreign product. Since R–11, R–113, and R–123 have normal boiling points at or above room temperature, non-condensable determination is not required for these refrigerants.

5.2.2.1 *Connection*. The sample cylinder shall be connected to an evacuated gas sampling bulb by means of a manifold. The manifold should have a valve arrangement that facilitates evacuation of all connecting tubing leading to the sampling bulb.

5.2.2.2 *Equalizing Pressures*. After the manifold has been evacuated, close the valve to the pump and open the valve on the system. Allow the pressure to equilibrate and close valves.

5.2.3 *Liquid Phase Sample*. A liquid phase sample is required for all tests listed in this standard except the test for non-condensables.

5.2.3.1 *Preparation*. Place a clean, empty sample cylinder with the valve open in an oven at 110 °C (230 °F) for one hour. Remove it from the oven while hot, immediately connect to an evacuation system and evacuate

to less than 1 mm mercury (1000 microns). Close the valve and allow it to cool. Weigh the empty cylinder.

5.2.3.2 *Manifolding*. The valve and lines from the unit to be sampled shall be clean and dry. The cylinder shall be connected to an evacuated gas sampling cylinder by means of a manifold. The manifold should have a valve arrangement that facilitates evacuation of all connecting tubing leading to the sampling cylinder.

5.2.3.3 *Liquid Sampling*. After the manifold has been evacuated, close the valve to the pump and open the valve on the system. Take the sample as a liquid by chilling the sample cylinder slightly. Accurate analysis requires that the sample container be filled to at least 60% by volume, however under no circumstances should the cylinder be filled to more than 80% by volume. This can be accomplished by weighing the empty cylinder and then the cylinder with refrigerant. When the desired amount of refrigerant has been collected, close the valve(s) and disconnect the sample cylinder immediately.

5.2.3.4 *Record Weight*. Check the sample cylinder for leaks and record the gross weight.

5.3 *Refrigerant Characterization*.

5.3.1 *Primary Method*. The primary method shall be gas chromatography (GC) as described in *Appendix C to ARI Standard 700–1995*. The chromatogram of the sample shall be compared to known standards.

5.3.2 *Alternative Method*. Determination of the boiling point and boiling point range is an acceptable alternative test method which can be used to characterize refrigerants. The test method shall be that described in the Federal Specification for ''Fluorocarbon Refrigerants,'' BB–F–1421 B, dated March 5, 1982, section 4.4.3.

5.3.3 *Required Values*. The required values for boiling point and boiling point range are given in Table 1A, *Physical Properties of Single Component Refrigerants;* Table 1B, *Physical Properties of Zeotropic Blends (400 Series Refrigerants);* and Table 1C, *Physical Properties of Azeotropic Blends (500 Series Refrigerants)*.

5.4 *Water Content*.

5.4.1 *Method*. The Coulometric Karl Fischer Titration shall be the primary test method for determining the water content of refrigerants. This method is described in *Appendix C to ARI Standard 700–1995*. This method can be used for refrigerants that are either a liquid or a gas at room temperature, including refrigerants 11, 113, and 123. For all refrigerants, the sample for water analysis shall be taken from the liquid phase of the container to be tested. Proper operation of the analytical method requires special equipment and an experienced operator. The precision of the results is excellent if proper sampling and handling procedures are followed. Refrigerants containing a colored dye can be successfully analyzed for water using this method.

5.4.2 *Limits*. The value for water content shall be expressed as parts per million (ppm) by weight and shall not exceed the maximum specified (*see* Tables 1A, 1B, and 1C).

5.5 *Chloride*.

The refrigerant shall be tested for chloride as an indication of the presence of hydrochloric acid and/or metal chlorides. The recommended procedure is intended for use with new or reclaimed refrigerants. Significant amounts of oil may interfere with the results by indicating a failure in the absence of chloride.

5.5.1 *Method*. The test method shall be that described in *Appendix C to ARI Standard 700–1995*. The test will show noticeable turbidity at chloride levels of about 3 ppm by weight or higher.

5.5.2 *Turbidity*. The results of the test shall not exhibit any sign of turbidity. Report the results as ''pass'' or ''fail.''

5.6 *Acidity*.

5.6.1 *Method*. The acidity test uses the titration principle to detect any compound that is highly soluble in water and ionizes as an acid. The test method shall be that described in *Appendix C to ARI Standard 700–1995*. This test may not be suitable for determination of high molecular weight organic acids; however these acids will be found in the high boiling residue test outlined in 5.7. The test requires a 100 to 120 gram sample and has a detection limit of 0.1 ppm by weight calculated as HCl.

5.6.2 *Limits*. The maximum permissible acidity is 1 ppm by weight as HCl.

5.7 *High Boiling Residue*.

5.7.1 *Method*. High boiling residue shall be determined by measuring the residue of a standard volume of refrigerant after evaporation. The refrigerant sample shall be evaporated at room temperature or at a temperature 45 °C (115 °F) for all refrigerants, except R–113 which shall be evaporated at 60 °C (140 °F), using a Goetz bulb as specified in *Appendix C to ARI Standard 700–1995*. Oils and/or organic acids will be captured by this method.

5.7.2 *Limits*. The value for high boiling residue shall be expressed as a percentage by volume and shall not exceed the maximum percent specified (*see* Tables 1A, 1B, and 1C). An alternative gravimetric method is described in *Appendix C to ARI Standard 700–1995*.

5.8 *Method of Tests for Particulates and Solids*.

5.8.1 *Method*. A measured amount of sample is evaporated from a Goetz bulb under controlled temperature conditions. The particulates/solids shall be determined by visual examination of the Goetz bulb prior to the evaporation of refrigerant. Presence of dirt, rust or other particulate contamination is reported as ''fail.'' For details of this test

method, refer to Part 3 of *Appendix C to ARI Standard 700–1995*.

5.9 *Non-Condensables*.

5.9.1 *Sample*. A vapor phase sample shall be used for determination of non-condensables. Non-condensable gases consist primarily of air accumulated in the vapor phase of refrigerants. The solubility of air in the refrigerants liquid phase is extremely low and air is not significant as a liquid phase contaminant. The presence of non-condensable gases may reflect poor quality control in transferring refrigerants to storage tanks and cylinders.

5.9.2 *Method*. The test method shall be gas chromatography with a thermal conductivity detector as described in *Appendix C to ARI Standard 700–1995*.

5.9.3 *Limit*. The maximum level of non-condensables in the vapor phase of a refrigerant in a container shall not exceed 1.5% by volume (*see* Tables 1A, 1B, and 1C).

5.10 *Impurities, including Other Refrigerants*.

5.10.1 *Method*. The amount of other impurities including other refrigerants in the subject refrigerant shall be determined by gas chromatography as described in *Appendix C to ARI Standard 700–1995*.

5.10.2 *Limit*. The subject refrigerant shall not contain more than 0.5% by weight of impurities including other refrigerants (*see* Tables 1A, 1B, and 1C).

Section 6. Reporting Procedure

6.1 *Reporting Procedure*. The source (manufacturer, reclaimer or repackager) of the packaged refrigerant shall be identified. The refrigerant shall be identified by its accepted refrigerant number and/or its chemical name. Maximum permissible levels of contaminants are shown in Tables 1A, 1B, and 1C. Test results shall be tabulated in a like manner.

Table 1A. Physical Properties of Single Component Refrigerants

	REPORTING UNITS	REFERENCE (SUBCLAUSE)	R-11	R-12	R-13	R-22	R-113	R-114	R-123	R-124
CHARACTERISTICS:										
BOILING POINT[1]	·F · 1.00 ATM	---	74.9	-21.6	-114.6	-41.4	117.6	38.8	82.6	12.2
	·C · 1.00 ATM	---	23.8	-29.8	-81.4	-40.8	47.6	3.8	27.9	-11.0
BOILING POINT RANGE[1]	K	---	0.3	0.3	0.5	0.3	0.3	0.3	0.3	0.3
TYPICAL ISOMER CONTENT	BY WEIGHT	---					0-1% R-113A	0-30% R-114A	0-8% R-123A	0-5% R-124A
VAPOR PHASE CONTAMINANTS:										
AIR AND OTHER NON-CONDENSABLES	% BY VOLUME · 25·C	5.9	N/A[2]	1.5	1.5	1.5	N/A[2]	1.5	N/A[2]	1.5
LIQUID PHASE CONTAMINANTS:										
WATER	PPM BY WEIGHT	5.4	20	10	10	10	20	10	20	10
ALL OTHER IMPURITIES INCLUDING REFRIGERANTS	% BY WEIGHT	5.1	0.50	0.50	0.50	0.50	0.50	0.50	0.50	0.50
HIGH BOILING RESIDUE	% BY VOLUME	5.7	0.01	0.01	0.05	0.01	0.03	0.01	0.01	0.01
PARTICULATES/SOLIDS	VISUALLY CLEAN TO PASS	5.8	PASS	PASS	PASS	PASS	PASS	PASS	PASS	PASS
ACIDITY	PPM BY WEIGHT	5.6	1.0	1.0	1.0	1.0	1.0	1.0	1.0	1.0
CHLORIDES[3]	NO VISIBLE TURBIDITY	5.5	PASS	PASS	PASS	PASS	PASS	PASS	PASS	PASS

Table 1B. Physical Properties of Zeotropic Blends (400 Series Refrigerants)

	REPORTING UNITS	REFERENCE (SUBCLAUSE)	R-401A	R-401B	R-402A	R-402B	R-406A [3]
CHARACTERISTICS:							
REFRIGERANT COMPONENTS			R-22/152A/124	R-22/152A/124	R-125/290/22	R-125/290/22	R-22/600A/142B
NOMINAL COMP, WEIGHT%			53/13/34	61/11/28	60/2/38	38/2/60	55/4/41
ALLOWABLE COMP, WEIGHT%			51-54/11.5-13.5/33-35	59-63/9.5-11.5/27-29	58-62/1-3/36-40	36-40/1-3/58-62	53-57/3-5/40-42
BOILING POINT [1]	°F @ 1.00 ATM	---	-27.7 TO -18.1	-30.4 TO -21.2	-54.8 TO -53.9	-53.3 TO -49.0	-32.7 TO -15.0
	°C @ 1.00 ATM	---	-33.2 TO -27.8	-34.7 TO -29.6	-48.2 TO -47.7	-47.4 TO -45.0	-36.0 TO -26.1
BOILING POINT RANGE [1]	K	---	5.4	5.1	0.5	2.4	9.9
VAPOR PHASE CONTAMINANTS:							
AIR AND OTHER NON-CONDENSABLES	% BY VOLUME 25°C	5.9	1.5	1.5	1.5	1.5	1.5
LIQUID PHASE CONTAMINANTS:							
WATER	PPM BY WEIGHT	5.4	10	10	10	10	10
ALL OTHER IMPURITIES INCLUDING REFRIGERANTS	% BY WEIGHT	5.1	0.50	0.50	0.50	0.50	0.50
HIGH BOILING RESIDUE	% BY VOLUME	5.7	0.01	0.01	0.01	0.01	0.01
PARTICULATES/SOLIDS	VISUALLY CLEAN TO PASS	5.8	PASS	PASS	PASS	PASS	PASS
ACIDITY	PPM BY WEIGHT	5.6	1.0	1.0	1.0	1.0	1.0

Table 1B (continued). Physical Properties of Zeotropic Blends (400 Series Refrigerants)

	REPORTING UNITS	REFERENCE (SUBCLAUSE)	R-407C	R-408A	R-409A	R-410A	R-410B	R-411A [3]	R-411B [3]
CHARACTERISTICS:									
REFRIGERANT COMPONENTS			R-32/125/134A	R125/143A/22	R22/124/142B	R32/125	R32/125	R1270/22/152A	R1270/22/152A
NOMINAL COMP, WEIGHT%			23/25/52	7/46/47	60/25/15	50/50	45/55	1.5/87.5/11.0	3/94/3
ALLOWABLE COMP, WEIGHT%			22-24/23-27/50-54	5-9/45-47/45-49	58-62/23-27/14-16	48.5-50.5/49.4-51.5	44-46/54-56	0.5-1.5/87.5-89.5/10-11	2-3/94-96/2-3
BOILING POINT [1]	·F · 1.00 ATM	---	46.4 TO -33.0	-48.8 TO -47.9	-32.4 TO -18.2	-60.1 TO -60.0	-60.3 TO -60.2		
	·C · 1.00 ATM	---	-43.6 TO -36.6	-44.9 TO -44.4	-35.8 TO -27.9	-51.2 TO -51.1	-51.3 TO -51.2		
BOILING POINT RANGE [1]	K	---	7.0	0.5	7.9	0.1	0.1		
VAPOR PHASE CONTAMINANTS: AIR AND OTHER NON-CONDENSABLES	% BY VOLUME · 25·C	5.9	1.5	1.5	1.5	1.5	1.5	1.5	1.5
LIQUID PHASE CONTAMINANTS:									
WATER	PPM BY WEIGHT	5.4	10	10	10	10	10	10	10
ALL OTHER IMPURITIES INCLUDING REFRIGERANTS	% BY WEIGHT	5.1	0.50	0.50	0.50	0.50	0.50	0.50	0.50
HIGH BOILING RESIDUE	% BY VOLUME	5.7	0.01	0.01	0.01	0.01	0.01	0.01	0.01
PARTICULATES/SOLIDS	VISUALLY CLEAN TO PASS	5.8	PASS	PASS	PASS	PASS	PASS	PASS	PASS
ACIDITY	PPM BY WEIGHT	5.6	1.0	1.0	1.0	1.0	1.0	1.0	1.0

Table 1C. Physical Properties of Azeotropic Blends (500 Series Refrigerants)

	REPORTING UNITS	REFERENCE (SUBCLAUSE)	R500	R502	R503	R507	R508 [3]
CHARACTERISTICS:							
REFRIGERANT COMPONENTS			R12/152A	R22/115	R23/13	R125/143A	R23/116
NOMINAL COMP, WEIGHT%			73.8/26.2	48.8/51.2	40.1/59.9	50/50	39/61
ALLOWABLE COMP, WEIGHT%			72.8-74.8/ 25.2-27.2	44.8-52.8/ 47.2-55.2	39-41/ 59-61	49-51/ 49-51	37-41/ 59-63
BOILING POINT [1]	°F · 1.00 ATM	---	-28.1	-49.7	-127.7	-52.1	-123.5
	°C · 1.00 ATM	---	-33.4	-45.4	-88.7	-46.7	-86.4
BOILING POINT RANGE [1]	K	---	0.5	0.5	0.5	0.5	0.5
VAPOR PHASE CONTAMINANTS:							
AIR AND OTHER NON-CONDENSABLES	% BY VOLUME 25°C	5.9	1.5	1.5	1.5	1.5	1.5
LIQUID PHASE CONTAMINANTS:							
WATER	PPM BY WEIGHT	5.4	10	10	10	10	10
ALL OTHER IMPURITIES INCLUDING REFRIGERANTS	% BY WEIGHT	5.1	0.50	0.50	0.50	0.50	0.50
HIGH BOILING RESIDUE	% BY VOLUME	5.7	0.05	0.01	0.01	0.01	0.01
PARTICULATES/SOLIDS	VISUALLY CLEAN TO PASS	5.8	PASS	PASS	PASS	PASS	PASS
ACIDITY	PPM BY WEIGHT	5.6	1.0	1.0	1.0	1.0	1.0
CHLORIDES [2]	NO VISIBLE TURBIDITY	5.5	PASS	PASS	PASS	PASS	PASS

[1] BOILING POINTS AND BOILING POINT RANGES, ALTHOUGH NOT REQUIRED, ARE PROVIDED FOR INFORMATIONAL PURPOSES.

[2] RECOGNIZED CHLORIDE LEVEL FOR PASS/FAIL IS 3PPM.

[3] SHADED COLUMNS DENOTE REFRIGERANTS FOR WHICH ANALYTICAL DATA IS NOT AVAILABLE.

APPENDIX A. REFERENCES—NORMATIVE

Listed here are all standards, handbooks, and other publications essential to the formation and implementation of the standard. All references in this appendix are considered as part of this standard.

ASHRAE Terminology of Heating, Ventilating, Air Conditioning and Refrigeration, American Society of Heating Refrigeration and Air-Conditioning Engineers, 1992, 1791 Tullie Circle NE., Atlanta, GA 30329–2305; U.S.A.

ASHRAE Standard 34–1992, *Number Designation and Safety Classification of Refrigerants*, American Society of Heating Refrigeration and Air-Conditioning Engineers, 1992, 1791 Tullie Circle NE., Atlanta, GA 30329–2305; U.S.A.

Appendix C to ARI Standard 700–1995: Analytical Procedures to ARI Standard 700–1995, Specifications for Fluorocarbon and Other Refrigerants, Air-Conditioning and Refrigeration Institute, 1995, 4301 North Fairfax Drive, Suite 425, Arlington, VA 22203; U.S.A.

Federal Specification for *Fluorocarbon Refrigerants, BB–F–1421–B*, dated March 5, 1992,

Office of the Federal Register, National Archives and Records Administration, 1992, 800 North Capitol Street, NW., Washington, D.C. 20402; U.S.A.

[69 FR 11981, Mar. 12, 2004]

APPENDIX A1 TO SUBPART F OF PART 82—GENERIC MAXIMUM CONTAMINANT LEVELS

Contaminant	Reporting units
Air and Other Non-condensables.	1.5% by volume @ 25 °C (N/A for refrigerants used in low-pressure appliances [1]).
Water	10 ppm by weight 20 ppm by weight (for refrigerants used in low-pressure appliances [1]).
Other Impurities Including Refrigerant.	0.50% by weight.
High boiling residue	0.01% by volume.
Particulates/solids	visually clean to pass.
Acidity	1.0 ppm by weight.
Chlorides (chloride level for pass/fail is 3ppm).	No visible turbidity.

[1] Low-pressure appliances means an appliance that uses a refrigerant with a liquid phase saturation pressure below 45 psia at 104 °F.

BLEND COMPOSITIONS (WHERE APPLICABLE)

Nominal composition (by weight%)	Allowable composition (by weight%)
Component constitutes 25% or more	±2.0
Component constitutes less than 25% but greater than 10%	±1.0
Component constitutes less than or equal to 10%	±0.5

[69 FR 11988, Mar. 12, 2004]

APPENDIX B1 TO SUBPART F OF PART 82—PERFORMANCE OF REFRIGERANT RECOVERY, RECYCLING AND/OR RECLAIM EQUIPMENT

This appendix is based on the Air-Conditioning and Refrigeration Institute Standard 740–1993.

REFRIGERANT RECOVERY/RECYCLING EQUIPMENT

Section 1. Purpose

1.1 *Purpose*. The purpose of this standard is to establish methods of testing for rating and evaluating the performance of refrigerant recovery, and/or recycling equipment, and general equipment requirements (herein referred to as ''equipment'') for containment or purity levels, capacity, speed, and purge loss to minimize emission into the atmosphere of designated refrigerants.

1.1.1 This standard is intended for the guidance of the industry, including manufacturers, refrigerant reclaimers, repackers, distributors, installers, servicemen, contractors and for consumers.

1.1.2 This standard is not intended to be used as a guide in defining maximum levels of contaminants in recycled or reclaimed refrigerants used in various applications.

1.2 *Review and Amendment*. This standard is subject to review and amendment as the technology advances.

Section 2. Scope

2.1 *Scope*. This standard defines general equipment requirements and the test apparatus, test mixtures, sampling and analysis techniques that will be used to determine the performance of recovery and/or recycling equipment for various refrigerants including R11, R12, R13, R22, R113, R114, R123, R134a, R500, R502, and R503, as referenced in the ANSI/ASHRAE Standard 34–1992, ''Number Designation of Refrigerants'' (American Society of Heating, Refrigerating, and Air Conditioning Engineers, Inc.).

Section 3. Definitions

3.1 *Recovered refrigerant*. Refrigerant that has been removed from a system for the purpose of storage, recycling, reclamation or transportation.

3.2 Recover. Reference 40 CFR 82.152.

3.3 Recycle. Reference 40 CFR 82.152.

3.4 Reclaim. Reference 40 CFR 82.152.

3.5 *Standard Contaminated Refrigerant Sample*. A mixture of new and/or reclaimed refrigerant and specified quantities of identified contaminants which are representative of field obtained, used refrigerant samples and which constitute the mixture to be processed by the equipment under test.

3.6 *Push/Pull Method*. The push/pull refrigerant recovery method is defined as the process of transferring liquid refrigerant from a refrigeration system to a receiving vessel by lowering the pressure in the vessel and raising the pressure in the system, and by connecting a separate line between the system liquid port and the receiving vessel.

3.7 *Recycle Rate*. The amount of refrigerant processed (in pounds) divided by the time elapsed in the recycling mode in pounds per minute. For equipment which uses a separate recycling sequence, the recycle rate does not include the recovery rate (or elapsed time). For equipment which does not use a separate recycling sequence, the recycle rate is a maximum rate based solely on the higher of the liquid or vapor recovery rate, by which the rated contaminant levels can be achieved.

3.8 *Equipment Classification*.

3.8.1 *Self Contained Equipment*. A refrigerant recovery or recycling system which is capable of refrigerant extraction without the assistance of components contained within an air conditioning or refrigeration system.

3.8.2 *System Dependent Equipment*. Refrigerant recovery equipment which requires for its operation the assistance of components contained in an air conditioning or refrigeration system.

3.9 *''Shall''*, *''Should''*, *''Recommended''* or *''It is Recommended''*, ''Shall'' ''Should'', ''recommended'', or ''it is recommended'' shall be interpreted as follows:

3.9.1 *Shall*. Where ''shall'' or ''shall not'' is used for a provision specified, that provision is mandatory if compliance with the standard is claimed.

3.9.2 *Should*, *Recommended*, or *It is Recommended*, ''Should'', ''recommended'', is used to indicate provisions which are not mandatory but which are desirable as good practice.

Section 4. General Equipment Requirements

4.1 The equipment manufacturer shall provide operating instructions, necessary maintenance procedures, and source information for replacement parts and repair.

4.2 The equipment shall indicate when any filter/drier(s) needs replacement. This requirement can be met by use of a moisture transducer and indicator light, by use of a sight glass/moisture indicator, or by some measurement of the amount of refrigerant processed such as a flow meter or hour meter. Written instructions such as ''to change the filter every 400 pounds, or every 30 days'' shall not be acceptable except for equipment in large systems where the Liquid Recovery Rate is greater than 25 lbs/min [11.3 Kg/min] where the filter/drier(s) would be changed for every job.

4.3 The equipment shall either automatically purge non-condensables if the rated level is exceeded or alert the operator that the non-condensable level has been exceeded. While air purge processes are subject to the requirements of this section, there is no specific requirement to include an air purge process for ''recycle'' equipment.

4.4 The equipment's refrigerant loss due to non-condensable purging shall not be exceeded 5% by weight of total recovered refrigerant. (See Section 9.4)

4.5 Internal hose assemblies shall not exceed a permeation rate of 12 pounds mass per square foot [5.8 g/cm^2] of internal surface per year at a temperature of 120 F [48.8 °C] for any designated refrigerant.

4.6 The equipment shall be evaluated at 75 F [24 °C] per 7.1. Normal operating conditions range from 50 °F to 104 F [10 °C to 40 °C].

4.7 *Exemptions:*

4.7.1 Equpment intended for recovery only shall be exempt from sections 4.2 and 4.3.

TABLE 1—STANDARD CONTAMINATED REFRIGERANT SAMPLES

	R11	R12	R13	R22	R113	R114	R123	R134a	R500	R502	R503
Moisture content: PPM by weight of pure refrigerant	100	80	30	200	100	85	100	200	200	200	30
Particulate content: PPM by weight of pure refrigerant characterized by[1]	80	80	80	80	80	80	80	80	80	80	80
Acid content: PPM by weight of pure refrigerant—(mg KOH per kg refrig.) characterized by[2]	500	100	NA	500	400	200	500	100	100	100	NA
Mineral oil content: % by weight of pure refrigerant	20	5	NA	5	20	20	20	5	5	5	NA
Viscosity (SUS)	300	150	.....	300	300	300	300	150	150	150	
Non condensable gases air content % volume[3] ≤	NA	3	3	3	NA	3	3	3	3	3	3

[1] Particulate content shall consist of inert materials and shall comply with particulate requirements in *ASHRAE* Standard 63.2, ''Method of Testing of Filtration Capacity of Refrigerant Liquid Line Filters and Filter Driers.''

[2] Acid consists of 60% oleic acid and 40% hydrochloric acid on a total number basis.

[3] Synthetic ester based oil.

Section 5. Contaminated Refrigerants

5.1 The standard contaminated refrigerant sample shall have the characteristics specified in Table 1, except as provided in 5.2

5.2 Recovery equipment not rated for any specific contaminant can be tested with new or reclaimed refrigerant.

Section 6. Test Apparatus

6.1 Self Contained Equipment Test Apparatus. The apparatus as shown in Figure 1 consists of a 3 cubic foot [0.085 m^3] mixing chamber with a conical-shaped bottom, although a larger mixing chamber is permissible. The size of the mixing chamber depends upon the size of the equipment. The outlet at the bottom of the cone and all restrictions and valves for liquid and vapor refrigerant lines in the test apparatus shall be a minimum of 0.375 in. [9.5 mm] inside diameter or equivalent. The minimum inside diameter for large equipment for use on chillers shall be 1.5 in. [38 mm.]. The mixing chamber shall contain various ports for receiving liquid refrigerant, oil, and contaminants. A recirculating line connected from the bottom outlet through a recirculating pump and then to a top vapor port shall be provided for stirring of the mixture. Isolation valves may be required for the pump. Alternative stirring means may be used if demonstrated to be equally effective.

6.1.1 For liquid refrigerant feed, the liquid valve is opened. For vapor refrigerant feed, the vapor valve is opened and refrigerant passes through an evaporator coil. Flow is controlled by a thermostatic expansion valve to create 5 F [3 °C] superheat at an evaporator temperature of 70 F ±3 F[21 °C±2°]. The evaporator coil or equivalent evaporator means shall be either sized large enough for the largest system or be sized for each system.

6.1.2 An alternative method for vapor refrigerant feed is to pass through a boiler and then an automatic pressure regulating valve set at refrigerant saturation pressure at 75 F ±3 F [24 °C ±2 °C].

6.2 System Dependent Equipment Test Apparatus. This test apparatus is to be used for final recovery vacuum rating of all system dependent equipment.

6.2.1 The test apparatus shown in Figure 2 consists of a complete refrigeration system. The manufacturer shall identify the refrigerants to be tested. The test apparatus can be modified to facilitate operation or testing of the system dependent equipment if the modifications to the apparatus are specifically described within the manufacturer's literature. (*See Figure 2.*) A ¼ inch [6.3 mm] balance line shall be connected across the test apparatus between the high and low pressure sides, with an isolation valve located at the connection to the compressor high side. A ¼ inch [6.3 mm] access port with a valve core shall be located in the balance line for the purpose of measuring final recovery vacuum at the conclusion of the test.

FIGURE 1

Test Apparatus for Self-Contained Equipment

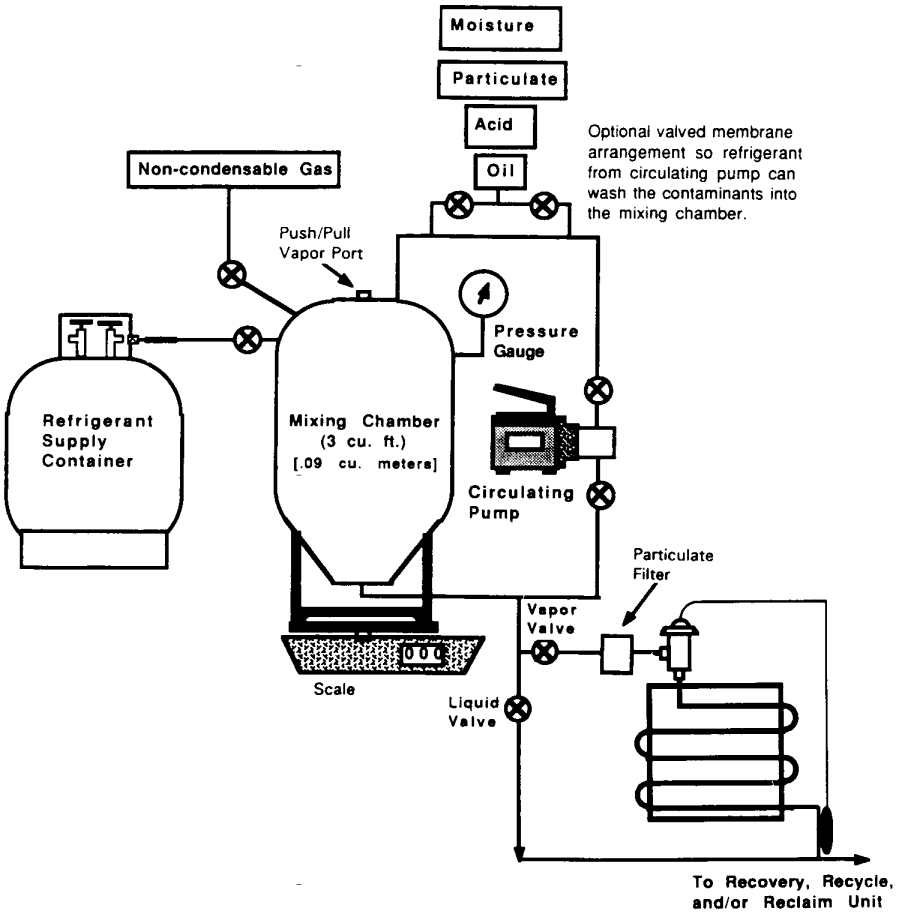

FIGURE 2

System-Dependent Equipment Test Apparatus

Configuration of a standard air conditioning or refrigeration system for use as a test apparatus

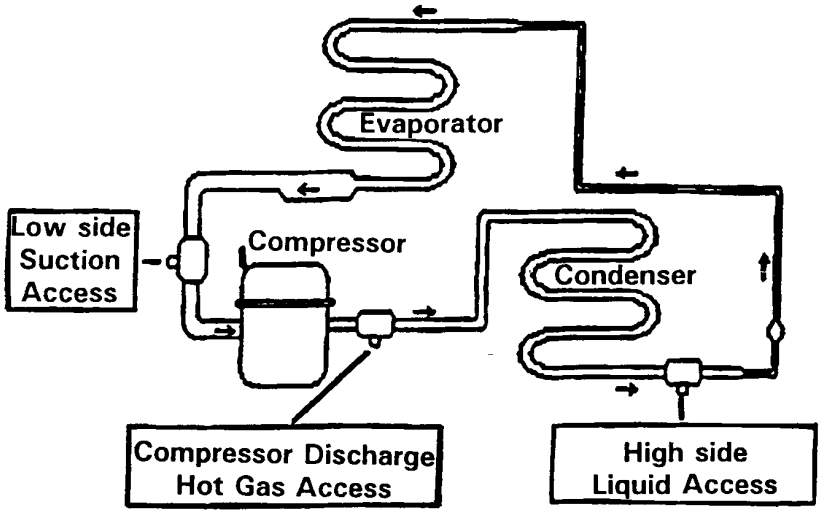

Section 7. Performance Testing

7.1 Contaminant removal and performance testing shall be conducted at 75 F ±2 F [23.9 °C ±1.1 °C].

7.1.1 The equipment shall be prepared for operation per the instruction manual.

7.1.2 The contaminated sample batch shall consist of not less than the sum of the amounts required to complete steps 7.1.2.2 and 7.1.2.3 below.

7.1.2.1 A liquid sample shall be drawn from the mixing chamber prior to starting the test to assure quality control of the mixing process.

7.1.2.2 Vapor refrigerant feed testing, if elected, shall normally be processed first. After the equipment reaches stabilized conditions of condensing temperature and/or storage tank pressure, the vapor feed recovery rate shall be measured. One method is to start measuring the vapor refrigerant recovery rate when 85% of refrigerant remains in the mixing chamber and continue for a period of time sufficient to achieve the accuracy in 9.2. If liquid feed is not elected, complete Step 7.1.2.4.

7.1.2.3 Liquid refrigerant feed testing, if elected, shall be processed next. After the equipment reaches stabilized conditions, the liquid feed recovery rate shall be measured. One method is to wait 2 minutes after starting liquid feed and then measure the liquid refrigerant recovery rate for a period of time sufficient to achieve the accuracy in 9.1. Continue liquid recovery operation as called for in 7.1.2.4.

7.1.2.4 Continue recovery operation until all liquid is removed from the mixing chamber and vapor is removed to the point where the equipment shuts down per automatic means or is manually stopped per the operating instructions.

7.1.2.5 After collecting the first contaminated refrigerant sample batch, the liquid and vapor value of the apparatus shall be closed and the mixing chamber pressure recorded after 1 minute as required in 9.5. After preparing a second contaminated refrigerant sample batch, continue recovery until the storage container reaches 80% liquid fill level. After recycling and measuring

the recycle rate per section 7.1.3, set this container aside for the vapor sample in 8.2.2.

7.1.2.6 Interruptions in equipment operations as called for in instruction manual are allowable.

7.1.3 Recycle as called for in equipment operating instructions. Determine recycle rate by appropriate means as required in 9.3.

7.1.4 Repeat steps 7.1.2, 7.1.2.4, and 7.1.3 with contaminated refrigerant sample until equipment indicator(s) show need to change filter(s). It will not be necessary to repeat the recycle rate determination in 7.1.3.

7.1.4.1 For equipment with a multiple pass recirculating filter system, analyze the contents of the previous storage container.

7.1.4.2 For equipment with a single pass filter system, analyze the contents of the current storage container.

7.1.5 Refrigerant loss due to the equipment's non-condensable gas purge shall be determined by appropriate means. (See Section 9.4.)

7.2 System Dependent Equipment. This procedure shall be used for vacuum rating of all system dependent equipment. Liquid refrigerant recovery rate, vapor refrigerant recovery rate, and recycle rate are not tested on system dependent systems.

7.2.1 The apparatus operation and testing shall be conducted at 75 F ±2 F. [23.9 °C. ±/1.1. °C.].

7.2.2 The apparatus shall be charged with refrigerant per its system design specifications.

7.2.3 For measurement of final recovery vacuum as required in 9.5, first shut the balance line isolation valve and wait 1 minute for pressure to balance. Then connect and operate the recovery system per manufacturers recommendations. When the evacuation is completed, open the balance line isolation valve and measure the pressure in the balance line.

Section 8. Sampling and Chemical Analysis Methods

8.1 The referee test methods for the various contaminants are summarized in the following paragraphs. Detailed test procedures are included in Appendix A ''Test Procedures for ARI STD 700.'' If alternate test methods are employed, the user must be able to demonstrate that they produce results equivalent to the specified referee method.

8.2 *Refrigerant Sampling.*

8.2.1 *Sampling Precautions.* Special precautions should be taken to assure that representative samples are obtained for analysis. Sampling shall be done by trained laboratory personnel following accepted sampling and safety procedures.

8.2.2 *Gas Phase Sample.* A gas phase sample shall be obtained for determining the non-condensables. Since non-condensable gases, if present, will concentrate in the vapor phase of the refrigerant, care must be exercised to eliminate introduction of air during the sample transfer. Purging is not and acceptable procedure for a gas phase sample since it may introduce a foreign product. Since R11, R113 and R123 have normal boiling points at or above room temperature, non-condensable determination is not required for these refrigerants.

8.2.2.1 The sample cylinder shall be connected to an evacuated gas sampling bulb by means of a manifold. The manifold should have a valve arrangement that facilitates evacuation of all connecting tubing leading to the sampling bulb.

8.2.2.2 After the manifold has been evacuated, close the valve to the pump and open the valve on the system. Allow the pressure to equilibrate and close valves.

8.2.3 *Liquid Phase Sample.* A liquid phase sample is required for all tests listed in this standard, except the test for non-condensables.

8.2.3.1 Place an empty sample cylinder with the valve open in an oven at 230 F [110 °C] for one hour. Remove it from the oven while hot, immediately connect to an evacuation system and evacuate to less than 1mm. mercury (1000 microns). Close the valve and allow it to cool.

8.2.3.2 The valve and lines from the unit to be sampled shall be clean and dry. Connect the line to the sample cylinder loosely. Purge through the loose connection. Make the connection tight at the end of the purge period. Take the sample as a liquid by chilling the sample cylinder slightly. Accurate analysis requires that the sample container be filled to at least 60% by volume; however under no circumstances should the cylinder be filled to more than 80% by volume. This can be accomplished by weighing the empty cylinder and then the cylinder with refrigerant. When the desired amount of refrigerant has been collected, close the valve(s) and disconnect the sample cylinder immediately.

8.2.3.3 Check the sample cylinder for leaks and record the gross weight.

8.3 *Water Content.*

8.3.1. The Coulometric Karl Fischer Titration shall be the primary test method for determining the water content of refrigerants. This method is described in Appendix A. This method can be used for refrigerants that are either a liquid or a gas at room temperature, including Refrigerants 11 and 13. For all refrigerants, the sample for water analysis shall be taken from the liquid phase of the container to be tested. Proper operation of the analytical method requires special equipment and an experienced operator. The precision of the results is excellent if proper sampling and handling procedures are followed. Refrigerants containing a colored dye can be successfully analyzed for water using this method.

8.3.2 The Karl Fischer Test Method is an acceptable alternative test method for determining the water content of refrigerants. This method is described in ASTM Standard for ''Water in gases Using Karl Fisher Reagent'' E700–79, reapproved 1984 (American Society for Testing and Materials, Philadelphia, PA).

8.3.3 Report the moisture level in parts per million by weight if a sample is required.

8.4 *Chloride*. The refrigerant shall be tested for chlorides as an indication of the presence of hydrochloric or similar acids. The recommended procedure is intended for use with new or reclaimed refrigerants. Significant amounts of oil may interfere with the results by indicating a failure in the absence of chlorides.

8.4.1 The test method shall be that described in Appendix A ''Test Procedures for ARI–700.'' The test will show noticeable turbidity at equivalent chloride levels of about 3 ppm by weight or higher.

8.4.2 The results of the test shall not exhibit any sign of turbity. Report results as ''pass'' or ''fail.''

8.5 *Acidity*.

8.5.1 The acidity test uses the titration principle to detect any compound that is highly soluble in water and ionizes as an acid. The test method shall be that described in Appendix A. ''Test Procedures for ARI–700.'' The test may not be suitable for determination of high molecular weight organic acids; however these acids will be found in the high boiling residue test outlined in Section 5.7. The test requires about a 100 to 120 gram sample and has a low detection limit of 0.1 ppm by weight as HC1.

8.6 High Boiling Residue.

8.6.1 High boiling residue will be determined by measuring the residue of a standard volume of refrigerant after evaporation. The refrigerant sample shall be evaporated at room temperature or a temperature 50 F [10°.0C], above the boiling point of the sample using a Goetz tube as specified in Appendix A ''Test Procedures for ARI–700.'' Oils and or organic acids will be captured by this method.

8.6.2 The value for high boiling residue shall be expressed as a percentage by volume.

8.7 Particulates/Solids.

8.7.1 A measured amount of sample is evaporated from a Goetz bulb under controlled temperature conditions. The particulates/solids shall be determined by visual examination of the empty Goetz bulb after the sample has evaporated completely. Presence of dirt, rust or other particulate contamination is reported a ''fail.'' For details of this test method, refer to Appendix B ''Test Procedures for ARI–700.''

8.8 Non-Condensables

8.8.1 A vapor phase sample shall be used for determination of non-condensables. Non-condensable gases consist primarily of air accumulated in the vapor phase of refrigerant containing tanks. The solubility of air in the refrigerants liquid phase is extremely low and air is not significant as a liquid phase contaminant. The presence of non-condensable gases may reflect poor quality control in transferring refrigerants to storage tanks and cylinders.

8.8.2 The test method shall be gas chromatography with a thermal conductivity detector as described in Appendix A ''Test Procedures for ARI–700.''

8.8.2.1 The Federal Specification for ''Fluorocarbon Refrigerants,'' BB–F–1421B, dated March 5, 1992, section 4.4.2 (perchloroethylene method) is an acceptable alternate test method.

8.8.3 Report the level of non-condensable as percent by volume.

Section 9. Performance Calculation and Rating

9.1 The liquid refrigerant recovery rate shall be expressed in pounds per minute [kg/min] and measured by weight change at the mixing chamber (See Figure 1) divided by elapsed time to an accuracy within .02 lbs/min. [.009 kg/min]. Ratings using the Push/Pull method shall be identified ''Push/Pull''. Equipment may be rated by both methods.

9.2 The vapor refrigerant recovery rate shall be expressed in pounds per minute [kg/min] and measured by weight change at the mixing chamber (See Figure 1) divided by elapsed time to an accuracy within .02 lbs/min. [.0.009 kg/min].

9.3 The recycle rate is defined in 3.7 and expressed in pounds per minute [kg/min] of flow and shall be per ASHRAE 41.7–84 ''Procedure For Fluid Measurement Of Gases'' or ASHRAE 41.8–89 ''Standard Method of Flow of Fluids—Liquids.''

9.3.1 For equipment using multipass recycling or a separate sequence, the recycle rate shall be determined by dividing the net weight W of the refrigerant to be recycled by the actual time T required to recycle the refrigerant. Any set-up or operator interruptions shall not be included in the time T. The accuracy of the recycle rate shall be within .02 lbs/min. [.009 kg/min].

9.3.2 If no separate recycling sequence is used, the recycle rate shall be the higher of the vapor refrigerant recovery rate or the liquid refrigerant recovery rate. The recycle rate shall match a process which leads to contaminant levels in 9.6. Specifically, a recovery rate determined from bypassing a contaminant removal device cannot be used as a recycle rate when the contaminant levels in 9.6 are determined by passing the refrigerant through the containment removal device.

9.4 Refrigerant loss due to non-condensable purging shall be less than 5%. This rating shall be expressed as ''passed'' if less than 5%.

This calculation will be based upon net loss of non-condensables and refrigerant due to the purge divided by the initial net content. The net loss shall be determined by weighing before and after the purge, by collecting purged gases, or an equivalent method.

9.5 The final recovery vacuum shall be the mixing chamber pressure called for in 7.1.2.5 expressed in inches of mercury vacuum, [mm Hg or kP]. The accuracy of the measurement shall be within ±.1 inch [±2.5mm] of Hg and rounding down to the nearest whole number.

9.6 The contaminant levels remaining after testing shall be published as follows:

Moisture content, PPM by weight
Chloride ions, Pass/Fail
Acidity, PPM by weight
High boiling residue, percentage by volume
Particulate/solid, Pass/Fail
Non-condensables, % by volume

9.7 Product Literature: Except as provided under product labelling in Section 11. performance ratings per 9.1, 9.2, 9.3, and 9.5 must be grouped together and shown for all listed refrigerants (11.2) subject to limitations of 9.8. Wherever any contaminant levels per 9.6 are rated, all ratings in 9.6 must be shown for all listed refrigerants subject to limitations of 9.8. The type of equipment in 11.1 must be included with either grouping. Optional ratings in 9.8 need not be shown.

9.8 Ratings shall include all of the parameters for each designed refrigerant in 11.2 as shown in Tables 2 and 3.

TABLE 2—PERFORMANCE

Parameter/type of equipment	Recovery	Recovery/recycle	Recycle	System dependent equipment
Liquid refrigerant recovery rate	(2)	(2)	N/A	N/A
Vapor refrigerant recovery rate	(2)	(2)	N/A	N/A
Final recovery vacuum	(1)	(1)	N/A	(1)
Recycle rate	N/A	(1)	(1)	N/A
Refrigerant loss due to non-condensable purging	(3)	(1)	(1)	N/A

[1] Mandatory rating.
[2] For a recovery or recovery/recycle unit, one must rate for either liquid feed only or vapor feed only or can rate for both. If rating only the one, the other shall be indicated by "N/A."
[3] For Recovery Equipment, these parameters are optional. If not rated, use N/A.

TABLE 3—CONTAMINANTS

Contaminant/type of equipment	Recovery	Recovery/recycle	Recycle	System dependent equipment
Moisture content	(*)	x	x	NA.
Chloride ions	(*)	x	x	NA.
Acidity	(*)	x	x	NA.
High boiling residue	(*)	x	x	NA.
Particulates	(*)	x	x	NA.
Non-condensables	(*)	x	x	NA.

* For Recovery Equipment, these parameters are optional. If not rated, use N/A.
x Mandatory rating.

Section 10. Tolerances

10.1 Any equipment tested shall produce contaminant levels not higher than the published ratings. The liquid refrigerant recovery rate, vapor refrigerant recovery rate, final recovery vacuum and recycle rate shall not be less than the published ratings.

Section 11. Product Labelling

11.1 *Type of equipment*. The type of equipment shall be as listed:

11.1.1 Recovery only
11.1.2 System Dependent Recovery
11.1.3 Recovery/Recycle
11.1.4 Recycle only

11.2 Designated refrigerants and the following as applicable for each:

11.2.1 Liquid Recovery Rate
11.2.2 Vapor Recovery Rate
11.2.3 Final Recovery Vacuum
11.2.4 Recycle Rate

11.3 The nameplate shall also conform to the labeling requirements established for certified recycling and recovery equipment established at 40 CFR 82.158(h).

ATTACHMENT TO APPENDIX B1

Particulate Used in Standard Contaminated Refrigerant Sample.

1. Particulate Specification

1.1 The particulate material pm will be a blend of 50% coarse air cleaner dust as received, and 50% retained on a 200-mesh screen. The coarse air cleaner dust is available from: AC Spark Plug Division, General Motors Corporation, Flint, Michigan.

1.2 Preparation of Particulate Materials

To prepare the blend of contaminant, first wet screen a quantity of coarse air cleaner dust on a 200-mesh screen (particle retention 74 pm). This is done by placing a portion of the dust on a 200-mesh screen and running water through the screen while stirring the dust with the fingers. The fine contaminant particles passing through the screen are discarded. The +200 mesh particles collected on the screen are removed and dried for one hour at 230 F [110 °C]. The blend of standard contaminant is prepared by mixing 50% by weight of coarse air cleaner dust as received after drying for one hour at 230 F [110 °C] with 50% by weight of the +200 mesh screened dust.

1.3 The coarse air cleaner dust as received and the blend used as the standard contaminant have the following approximate particle size analysis: Wt. % in various size ranges, pm.

Size range	As received	Blend
0–5	12	6
5–10	12	6
10–20	14	7
20–40	23	11
40–80	30	32
80–200	9	38

[58 FR 28712, May 14, 1993, as amended at 59 FR 42960, Aug. 19, 1994. Redesignated and amended at 68 FR 43815, July 24, 2003]

APPENDIX B2 TO SUBPART F OF PART 82—PERFORMANCE OF REFRIGERANT RECOVERY, RECYCLING, AND/OR RECLAIM EQUIPMENT

This appendix is based on the Air-Conditioning and Refrigeration Institute Standard 740–1995.

Section 1. Purpose

1.1 *Purpose*. The purpose of this standard is to establish methods of testing for rating and evaluating the performance of refrigerant recovery, and/or recycling equipment and general equipment requirements (herein referred to as ''equipment'') for contaminant or purity levels, capacity, speed and purge loss to minimize emission into the atmosphere of designated refrigerants.

Section 2. Scope

2.1 *Scope*. This standard applies to equipment for recovering and/or recycling single refrigerants, azeotropics, zeotropic blends, and their normal contaminants from refrigerant systems. This standard defines the test apparatus, test gas mixtures, sampling procedures and analytical techniques that will be used to determine the performance of refrigerant recovery and/or recycling equipment (hereinafter, ''equipment'').

Section 3. Definitions

3.1 *Definitions*. All terms in this appendix will follow the definitions in §82.152 unless otherwise defined in this appendix.

3.2 *Clearing Refrigerant*. Procedures used to remove trapped refrigerant from equipment before switching from one refrigerant to another.

3.3 *High Temperature Vapor Recovery Rate*. For equipment having at least one designated refrigerant (see 11.2) with a boiling point in the range of −50 to +10 °C, the rate will be measured for R–22, or the lowest boiling point refrigerant if R–22 is not a designated refrigerant.

3.4 *Published Ratings*. A statement of the assigned values of those performance characteristics, under stated rating conditions, by which a unit may be chosen to fit its application. These values apply to all units of like nominal size and type (identification) produced by the same manufacturer. As used herein, the term ''published rating'' includes the rating of all performance characteristics shown on the unit or published in specifications, advertising or other literature controlled by the manufacturer, at stated rating conditions.

3.5 *Push/Pull Method*. The push/pull refrigerant recovery method is defined as the process of transferring liquid refrigerant from a refrigeration system to a receiving vessel by lowering the pressure in the vessel and raising the pressure in the system, and by connecting a separate line between the system liquid port and the receiving vessel.

3.6 *Recycle Flow Rate*. The amount of refrigerant processed divided by the time elapsed in the recycling mode. For equipment which uses a separate recycling sequence, the recycle rate does not include the recovery rate (or elapsed time). For equipment which does not use a separate recycling sequence, the recycle rate is a rate based solely on the higher of the liquid or vapor recovery rate, by which the contaminant levels were measured.

3.7 *Residual Trapped Refrigerant*. Refrigerant remaining in equipment after clearing.

3.8 *Shall*, *Should*, *Recommended* or *It Is Recommended* shall be interpreted as follows:

3.8.1 *Shall*. Where ''shall'' or ''shall not'' is used for a provision specified, that provision

is mandatory if compliance with this appendix is claimed.

3.8.2 *Should, Recommended* or *It Is Recommended* is used to indicate provisions which are not mandatory but which are desirable as good practice.

3.9 Standard Contaminated Refrigerant Sample. A mixture of new or reclaimed refrigerant and specified quantities of identified contaminants which constitute the mixture to be processed by the equipment under test. These contaminant levels are expected only from severe service conditions.

3.10 *Trapped Refrigerant*. The amount of refrigerant remaining in the equipment after the recovery or recovery/recycling operation but before clearing.

3.11 *Vapor Recovery Rate*. The average rate that refrigerant is withdrawn from the mixing chamber between two pressures as vapor recovery rate is changing pressure and temperature starting at saturated conditions either 24 °C or at the boiling point 100 kPa (abs), whichever is higher. The final pressure condition is 10% of the initial pressure, but not lower than the equipment final recovery vacuum and not higher than 100 kPa (abs).

Section 4. General Equipment Requirements

4.1 *Equipment Information*. The equipment manufacturer shall provide operating instructions, necessary maintenance procedures and source information for replacement parts and repair.

4.2 *Filter Replacement*. The equipment shall indicate when any filter/drier(s) needs replacement. This requirement can be met by use of a moisture transducer and indicator light, by use of a sight glass/moisture indicator or by some measurement of the amount of refrigerant processed such as a flow meter or hour meter. Written instructions such as ''to change the filter every 181 kg, or every 30 days'' shall not be acceptable except for equipment in large systems where the liquid recovery rate is greater than 11.3 kg/min where the filter/drier(s) would be changed for every job.

4.3 *Purge of Non-Condensable*. If non-condensables are purged, the equipment shall either automatically purge non-condensables or provide indicating means to guide the purge process.

4.4 *Purge Loss*. The total refrigerant loss due to purging non-condensables, draining oil and clearing refrigerant (*see* 9.5) shall be less than 3% (by weight) of total processed refrigerant.

4.5 *Permeation Rate*. High pressure hose assemblies ⅝ in. [16 mm] nominal and smaller shall not exceed a permeation rate of 3.9 g/cm^2/yr (internal surface) at a temperature of 48.8 °C. Hose assemblies that UL recognized as having passed ANSI/UL 1963 requirements shall be accepted without testing. See 7.1.4.

4.6 *Clearing Trapped Refrigerant*. For equipment rated for more than one refrigerant, the manufacturer shall provide a method and instructions which will accomplish connections and clearing within 15 minutes. Special equipment, other than a vacuum pump or manifold gauge set shall be furnished. The clearing procedure shall not rely upon the storage cylinder below saturated pressure conditions at ambient temperature.

4.7 *Temperature*. The equipment shall be evaluated at 24 °C with additional limited evaluation at 40 °C. Normal operating conditions range from 10 °C to 40 °C.

4.8 *Exemptions*. Equipment intended for recovery only shall be exempt from 4.2 and 4.3.

Section 5. Contaminated Refrigerants

5.1 *Sample Characteristics*. The standard contaminated refrigerant sample shall have the characteristics specified in Table 1, except as provided in 5.2.

5.2 *Recovery-Only Testing*. Recovery equipment not rated for any specific contaminant shall be tested with new or reclaimed refrigerant.

Section 6. Test Apparatus

6.1 *General Recommendations*. The recommended test apparatus is described in the following paragraphs. If alternate test apparatus are employed, the user shall be able to demonstrate that they produce results equivalent to the specified referee apparatus.

6.2 *Self-Contained Equipment Test Apparatus*. The apparatus, shown in Figure 1, shall consist of:

6.2.1 *Mixing Chamber*. A mixing chamber consisting of a tank with a conical-shaped bottom, a bottom port and piping for delivering refrigerant to the equipment, various ports and valves for adding refrigerant to the chamber and stirring means for mixing.

6.2.2 *Filling Storage Cylinder*. The storage cylinder to be filled by the refrigerant transferred shall be cleaned and at the pressure of the recovered refrigerant at the beginning of the test. It will not be filled over 80%, by volume.

6.2.3 *Vapor Feed*. Vapor refrigerant feed consisting of evaporator, control valves and piping to create a 3.0 °C superheat condition at an evaporating temperature of 21 °C ±2K.

6.2.4 *Alternative Vapor Feed*. An alternative method for vapor feed shall be to pass the refrigerant through a boiler and then through an automatic pressure regulating valve set at different saturation pressures, moving from saturated pressure at 24 °C to final pressure of recovery.

6.2.5 *Liquid Feed*. Liquid refrigerant feed consisting of control valves, sampling port and piping.

6.2.6 *Instrumentation*. Instrumentation capable of measuring weight, temperature, pressure and refrigerant loss, as required.

TABLE 1—STANDARD CONTAMINATED REFRIGERANT SAMPLES

	R11	R12	R13	R22	R113	R114	R123	R134a	R500	R502	R503
Moisture Content: ppm by Weight of Pure refrigerant	100	80	30	200	100	85	200	200	200	200	30
Particulate Content: ppm by Weight of Pure Refrigerant Characterized by [1]	80	80	NA	80	80	80	80	80	80	80	NA
Acid Content: ppm by Weight of Pure Refrigerant—(mg KOH per kg Refrigerant) Characterized by [2]	500	100	NA	500	400	200	500	100	100	100	NA
Mineral Oil Content:											
% by Weight of Pure Refrigerant	20	5	NA	5	20	20	20	5	5	5	NA
Viscosity (SUS)	300	150	.....	300	300	300	300	150 [3]	150	150	
Non-Condensable Gases (Air Content): % by Volume	NA	3	3	3	NA	3	NA	3	3	3	3

[1] Particulate content shall consist of inert materials and shall comply with particulate requirements in appendix B.
[2] Acid consists of 60% oleic acid and 40% hydrochloric acid on a total number basis.
[3] Synthetic ester-based oil.

Figure 1. Test Apparatus for Self-Contained Equipment

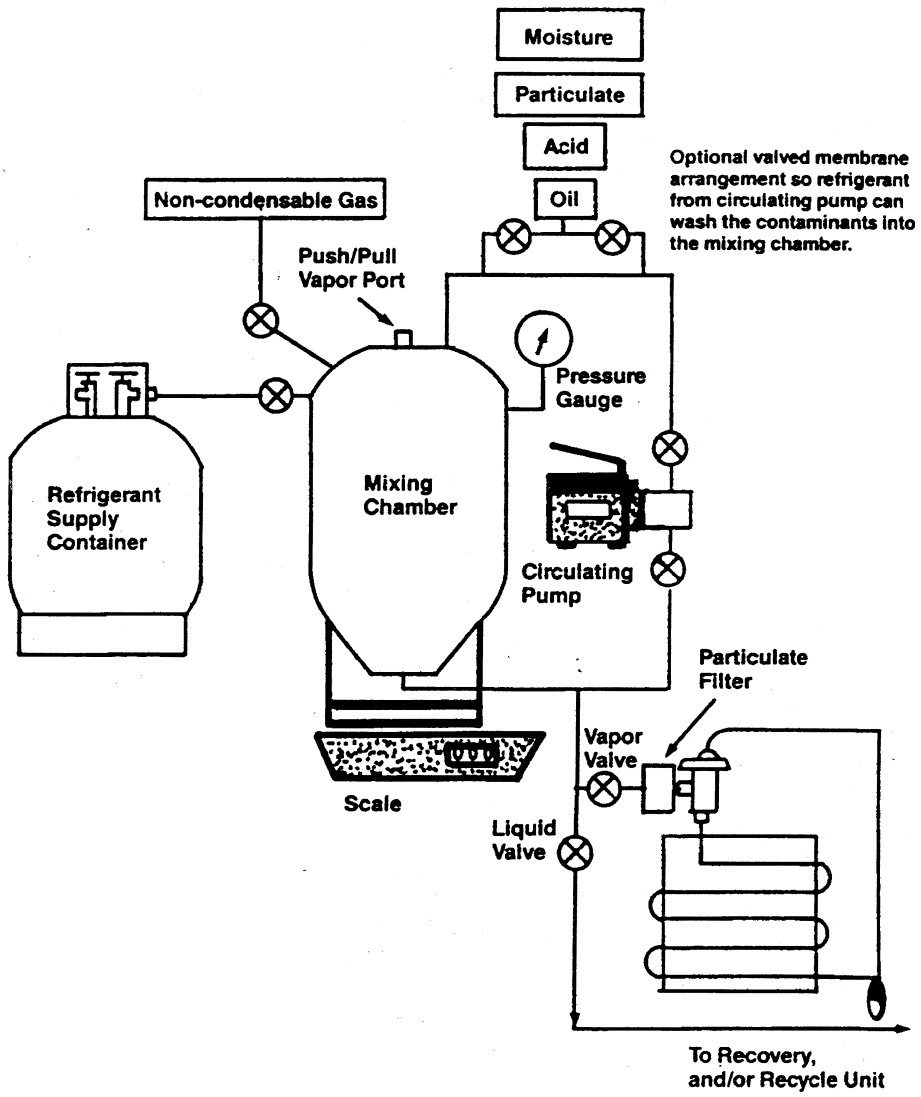

6.3 *Size.* The size of the mixing chamber shall be a minimum of .09 m^3. The bottom port and the refrigerant feed shall depend on the size of the equipment. Typically, the mixing valves and piping shall be 9.5 mm. For large equipment to be used on chillers, the minimum inside diameter of ports, valves and pipings shall be the smaller of the manufacturer's recommendation or 37 mm.

6.4 *System Dependent Equipment Test Apparatus.* This test apparatus is to be used for final recovery vacuum rating of all system dependent equipment.

6.4.1 *Test Setup*. The test apparatus shown in Figure 2 consists of a complete refrigeration system. The manufacturer shall identify the refrigerants to be tested. The test apparatus can be modified to facilitate operation or testing of the system dependent equipment if the modifications to the apparatus are specifically described within the manufacturer's literature. (*See* Figure 2.) A 6.3 mm balance line shall be connected across the test apparatus between the high and low-pressure sides, with an isolation valve located at the connection to the compressor high side. A 6.3 mm access port with a valve core shall be located in the balance line for the purpose of measuring final recovery vacuum at the conclusion of the test.

Section 7. Performance Testing

7.1 *General Testing*.

7.1.1 *Temperatures*. Testing shall be conducted at an ambient temperature of 24 °C ±1K except high temperature vapor recovery shall be at 40 °C ±1K. The evaporator conditions of 6.2.3 shall be maintained as long as liquid refrigerant remains in the mixing chamber.

7.1.2 *Refrigerants*. The equipment shall be tested for all designated refrigerants (*see* 11.2). All tests in Section 7 shall be completed for each refrigerant before starting tests with the next refrigerant.

7.1.3 *Selected Tests*. Tests shall be as appropriate for the equipment type and ratings parameters selected (*see* 9.9, 11.1 and 11.2).

7.1.4 *Hose Assemblies*. For the purpose of limiting refrigerant emissions to the atmosphere, hose assemblies shall be tested for permeation according to ANSI/UL Standard 1963, Section 40.10.

7.2 *Equipment Preparation and Operation*. The equipment shall be prepared and operated per the operating instructions.

7.3 *Test Batch*. The test batch consisting of refrigerant sample (*see* Section 5) of the test refrigerant shall be prepared and thoroughly mixed. Continued mixing or stirring shall be required during the test while liquid refrigerant remains in the mixing chamber. The mixing chamber shall be filled to 80% level by volume.

7.3.1 *Control Test Batch*. Prior to starting the test for the first batch for each refrigerant, a liquid sample will be drawn from the mixing chamber and analyzed per Section 8 to assure that contaminant levels match Table 1 within ±10 ppm for moisture, ±20 ppm for particulate, ±20 ppm for oleic acid and ±0.5% for oil.

7.4 *Recovery Tests (Recovery and Recovery/Recycle Equipment)*.

7.4.1 *Determining Recovery Rates*. The liquid and vapor refrigerant recovery rates shall be measured during the first test batch for each refrigerant (*see* 9.1, 9.2 and 9.4). Equipment preparation and recovery cylinder changeover shall not be included in elapsed time measurements for determining vapor recovery rate and liquid refrigerant recovery rate. Operations such as subcooling the recovery cylinder shall be included. Recovery cylinder shall be the same size as normally furnished or specified in the instructions by the equipment manufacturer. Oversized tanks shall not be permitted.

7.4.1.1 *Liquid Refrigerant Recovery Rate*. If elected, the recovery rate using the liquid refrigerant feed means (*see* 6.2.5) shall be determined. After the equipment reaches stabilized conditions of condensing temperature and/or recovery cylinder pressure, the recovery process shall be stopped and an initial weight shall be taken of the mixing chamber (*see* 9.2). The recovery process shall be continued for a period of time sufficient to achieve the accuracy in 9.4. The recovery process shall be stopped and a final weight shall be taken of the mixing chamber.

Configuration of standard air conditioning or refrigeration system for use as a test apparatus

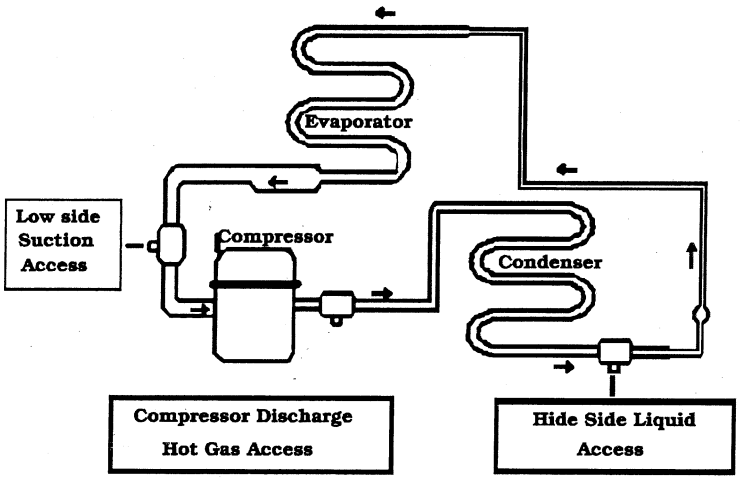

Figure 2. System Dependent Equipment Test Apparatus

7.4.1.2 *Vapor Refrigerant Recovery Rate.* If elected, the average vapor flow rate shall be measured to accuracy requirements in clause 9.4 under conditions with no liquid refrigerant in the mixing chamber. The liquid recovery feed means shall be used. At initial conditions of saturated vapor at the higher of 24 °C or the boiling temperature (100 kPa absolute pressure), the weight of the mixing chamber and the pressure shall be recorded. At final conditions representing pressure in the mixing chamber of 10% of the initial condition, but not less than the final recovery vacuum (*see* 9.6) nor more than 100 kPa, measure the weight of the mixing chamber and the elapsed time.

7.4.1.3 *High Temperature Vapor Recovery Rate.* Applicable for equipment having at least one designated refrigerant (*see* 11.2) with a boiling point between −50 °C and +10 °C. Measure the rate for R–22, or the refrigerant with the lowest boiling point if R–22 is not a designated refrigerant. Repeat the test in 7.4.1.2 at saturated conditions at 40 °C and continue to operate equipment to assure it will achieve the final recovery vacuum (*see* 7.4.3).

7.4.2 *Recovery Operation.* This test is for determining the final recovery vacuum and the ability to remove contaminants as appropriate. If equipment is rated for liquid recovery (*see* 7.4.1.3), liquid recovery feed means described in 6.2.5 shall be used. If not, vapor recovery means described in 6.2.3 or 6.2.4 shall be used. Continue recovery operation until all liquid is removed from the test apparatus and vapor is removed to the point where equipment shuts down by automatic means or is manually shut off per operating instructions.

7.4.2.1 *Oil Draining.* Capture oil from the equipment at intervals as required in the instructions. Record the weight of the container. Completely remove refrigerant from oil by evacuation or other appropriate means. The weight difference shall be used in 9.5.2.

7.4.3 *Final Recovery Vacuum.* At the end of the first test batch for each refrigerant, the liquid valve and vapor valve of the apparatus shall be closed. After waiting 1 minute, the mixing chamber pressure shall be recorded (*see* 9.6).

7.4.4 *Residual Refrigerant.* This test will measure the mass of remaining refrigerant in the equipment after clearing and therefore the potential for mixing refrigerants (*see* 4.6).

7.4.4.1 *Initial Conditions*. At the end of the last test for each batch for each refrigerant, the equipment shall be disconnected from the test apparatus (Figure 1). Recycle per 7.5, if appropriate. Perform refrigerant clearing operations as called for in the instruction manual. Capture and record the weight of any refrigerant which would have been emitted to the atmosphere during the clearing process for use in 9.5. If two loops are used for recycling, trapped refrigerant shall be measured for both.

7.4.4.2 *Residual Trapped Refrigerant*. Evacuate an empty test cylinder to 1.0 kPa absolute. Record the empty weight of the test cylinder. Open all valves to the equipment so as to provide access to all trapped refrigerant. Connect the equipment to the test cylinder and operate valves to recover the residual refrigerant. Record the weight of the test cylinder using a recovery cylinder pressure no less than specified in 6.2.2. Place the test cylinder in liquid nitrogen for a period of 30 minutes or until a vacuum of 1000 microns is reached, whichever occurs first.

7.5 *Recycling Tests (Recovery/Recycle Equipment)*.

7.5.1 *Recycling Operation*. As each recovery cylinder is filled in 7.4.2, recycle according to operating instructions. There will not necessarily be a separate recycling sequence. Note non-condensable purge measurement in 9.5.

7.5.1.1 *Recycle Flow Rate*. While recycling the first recovery cylinder for each refrigerant, determine the recycling flow rate by appropriate means (*see* 9.3) to achieve the accuracy required in 9.4.

7.5.2 *Non-Condensable Sample*. After completing 7.4.3, prepare a second test batch (7.3). Recover per 7.4.2 until the current recovery cylinder is filled to 80% level by volume. Recycle per 7.5.1. Mark this cylinder and set aside for taking the vapor sample. For equipment having both an internal tank of at least 3 kg refrigerant capacity and an external recovery cylinder, two recovery cylinders shall be marked and set aside. The first is the cylinder described above. The second cylinder is the final recovery cylinder after filling it to 80% level by volume and recycling.

7.5.3 *Liquid Sample for Analysis*. Repeat steps 7.3, 7.4.2 and 7.5.1 with further test batches until indication means in 4.2 show the filter/drier(s) need replacing.

7.5.3.1 *Multiple Pass*. For equipment with a separate recycling circuit (multiple pass), set aside the current cylinder and draw the liquid sample (*see* 7.4) from the previous cylinder.

7.5.3.2 *Single Pass*. For equipment with the single pass recycling circuit, draw the liquid sample (*see* 7.4) from the current cylinder.

7.6 *Measuring Refrigerant Loss*. Refrigerant loss due to non-condensables shall be determined by appropriate means (*see* 9.5.1). The loss could occur in 7.4.1, 7.4.2 and 7.5.1.

Section 8. Sampling and Chemical Analysis Methods

8.1 *Chemical Analysis*. Chemical analysis methods shall be specified in appropriate standards such as ARI 700–95 and Appendix C to ARI Standard 700–95.

8.2 *Refrigerant Sampling*.

8.2.1 *Water Content*. The water content in refrigerant shall be measured by the Karl Fischer Analytical Method or by the Karl Fischer Coulometric techniques. Report the moisture level in parts per million by weight.

8.2.2 *Chloride Ions*. Chloride ions shall be measured by turbidity tests. At this time, quantitative results have not been defined. Report chloride content as ''pass'' or ''fail.'' In the future, when quantitative results are possible, report chloride content as parts per million by weight.

8.2.3 *Acidity*. The acidity test uses the titration principle. Report the acidity in parts per million by weight (mg KOH/kg) of sample.

8.2.4 *High Boiling Residue*. High boiling residues shall use measurement of the volume of residue after evaporating a standard volume of refrigerant. Using weight measurement and converting to volumetric units is acceptable. Report high boiling residues as percent by volume.

8.2.5 *Particulates/Solids*. The particulates/solids measurement employs visual examination. Report results as ''pass'' or ''fail.''

8.2.6 *Non-condensables*. The level of contamination by non-condensable gases in the base refrigerant being recycled shall be determined by gas chromatography. Report results as percent by volume.

Section 9. Performance Calculation and Rating

9.1 *Vapor Refrigerant Recovery Rate*. This rate shall be measured by weight change of the mixing chamber divided by elapsed time (*see* 7.4.1.2). The units shall be kg/min and the accuracy shall be per 9.4.

9.1.1 *High Temperature Vapor Recovery Rate*.

9.2 *Liquid Refrigerant Recovery Rate*. This rate shall be measured by weight change of the mixing chamber divided by elapsed time (*see* 7.4.1.3). The units shall be kg/min and the accuracy shall be per 9.4.

9.3 *Recycle Flow Rate*. The recycle flow rate shall be as defined in 3.10, expressed in kg/min, and the accuracy shall be per 9.4.

9.3.1 For equipment using multi-pass recycling or a separate sequence, the recycle rate shall be determined by dividing the net weight W of the refrigerant to be recycled by the actual time T required to recycle. Any set-up or operator interruptions shall not be included in the time T.

9.3.2 If no separate recycling sequence is used, the recycle rate shall be the higher of the vapor refrigerant recovery rate or the liquid refrigerant recovery rate. The recycle rate shall match a process which leads to contaminant levels in 9.9. Specifically, a recovery rate determined from bypassing a contaminant removal device cannot be used as a recycle rate when the contaminant levels in 9.9 are determined by passing the refrigerant through the contaminant removal device.

9.4 *Accuracy of Flow Rates*. The accuracy of test measurements in 9.1, 9.2 and 9.3 shall be ±008 kg/min or flow rates up to .42 kg/min and ±2.0% for flow rates larger than .42 kg/min. Ratings shall be expressed to the nearest .02 kg/min.

9.5 *Refrigerant Loss*. This calculation will be based upon the net loss of refrigerant which would have been eliminated in the non-condensable purge process (*see* 7.5.1), the oil draining process (*see* 7.4.2.1) and the refrigerant clearing process (*see* 7.4.4.1), all divided by the net refrigerant content of the test batches. The refrigerant loss shall not exceed 3% by weight.

9.5.1 *Non-Condensable Purge*. Evacuate an empty container to 2 kPa absolute. Record the empty weight of the container. Place the container in a dry ice bath. Connect the equipment purge connection to the container and operate purge according to operating instructions so as to capture the non-condensables and lost refrigerant. Weigh the cylinder after the recycling is complete. Equivalent means are permissible.

9.5.2 *Oil Draining*. Refrigerant removed from the oil after draining shall be collected and measured in accordance with 7.4.2.1.

9.5.3 *Clearing Unit*. Refrigerant captured during the clearing process shall be measured in accordance with 7.4.4.1.

9.6 *Final Recovery Vacuum*. The final recovery vacuum shall be the mixing chamber pressure in 7.4.3 expressed in kPa. The accuracy of the measurement shall be within 0.33 kPa.

9.7 *Residual Trapped Refrigerant*. The amount of residual trapped refrigerant shall be the final weight minus the initial weight of the test cylinder in 7.4.4.2, expressed in kg. The accuracy shall be ±0.02 kg and reported to the nearest 0.05 kg.

9.8 *Quantity Recycled*. The amount of refrigerant processed before changing filters (*see* 7.5.3) shall be expressed in kg to an accuracy of ±1%.

9.9 *Contaminant Levels*. The contaminant levels remaining after testing shall be published as follows:

Moisture content, ppm by weight
Chloride ions, pass/fail
Acidity, ppm by weight
High boiling residue, % (by volume)
Particulates-solid, pass/fail (visual examination)
Non-condensables, % (by volume)

9.10 *Minimum Data Requirements for Published Ratings*. Published ratings shall include all of the parameters as shown in Tables 2 and 3 for each refrigerant designated by the manufacturer.

Section 10. Tolerances

10.1 *Tolerances*. Performance related parameters shall not be less favorable than the published ratings.

Section 11. Marking and Nameplate Data

11.1 *Marking and Nameplate Data*. The nameplate shall display the manufacturer's name, model designation, type of equipment, designated refrigerants, capacities and electrical characteristics where applicable. The nameplate shall also conform to the labeling requirements established for certified recycling and recovery equipment established at 40 CFR 82.158(h).

Recommended nameplate voltages for 60 Hertz systems shall include one or more of the utilization voltages shown in Table 1 of ARI Standard 110–90. Recommended nameplate voltages for 50 Hertz systems shall include one or more of the utilization voltages shown in Table 1 of IEC Standard Publication 38, IEC Standard Voltages.

11.2 *Data for Designated Refrigerants*. For each refrigerant designated, the manufacturer shall include all the following that are applicable per Table 2:

a. Liquid Recovery Rate
b. Vapor Recovery Rate
c. High Temperature Vapor Recovery Rate
d. Final Recovery Vacuum
e. Recycle Flow Rate
f. Residual Trapped Refrigerant
g. Quantity Recycled

TABLE 2—PERFORMANCE

Parameter/Type of equipment	Recovery	Recovery/Recycle	Recycle	System dependent equipment
Liquid Refrigerant Recovery Rate	(1)	(1)	N/A	N/A
Vapor Refrigerant Recovery Rate	(1)	(1)	N/A	N/A
High Temp. Vapor Recovery Rate	(1)	(1)	N/A	N/A
Final Recovery Vacuum	(X)	(X)	N/A	(X)
Recycle Flow Rate	N/A	(X)	(X)	N/A
Refrigerant Loss	(3)	(X)	(X)	(3)

TABLE 2—PERFORMANCE—Continued

Parameter/Type of equipment	Recovery	Recovery/ Recycle	Recycle	System dependent equipment
Residual Trapped Refrigerant	([2])	([2])	([2])	([2])
Quantity Recycled	N/A	([X])	([X])	N/A

[X] Mandatory rating.
[1] For a recovery or recovery/recycle unit, one must rate either liquid refrigerant recovery rate or vapor refrigerant recovery rate or one can rate for both. If rating only the one, the other shall be indicated by N/A, "not applicable."
[2] Mandatory rating for equipment tested for multiple refrigerants.
[3] Mandatory rating if multiple refrigerants, oil separation or non-condensable purge are rated.
NOTE: For recovery equipment, these parameters are optional. If not rated use N/A, "not applicable."

TABLE 3—CONTAMINANTS

Contaminant/Type of equipment	Recovery	Recovery/ Recycle	Recycle	System dependent equipment
Moisture Content	(*)	([X])	([X])	N/A
Chloride Ions	(*)	([X])	([X])	N/A
Acidity	(*)	([X])	([X])	N/A
High Boiling Residue	(*)	([X])	([X])	N/A
Particulates	(*)	([X])	([X])	N/A
Non-Condensables	(*)	([X])	([X])	N/A

* For recovery equipment, these parameters are optional. If not rated, use N/A, "not applicable."
[X] Mandatory rating.

ATTACHMENT 1 TO APPENDIX B2 TO SUBPART F OF PART 82—REFERENCES

Listed here are all standards, handbooks, and other publications essential to the formation and implementation of the standard. All references in this appendix are considered as part of this standard.

- ANSI/UL Standard 1963, *Refrigerant Recovery/Recycling Equipment,* First Edition, 1989, American National Standards Institute/ Underwriters Laboratories, Inc.
- ARI Standard 110–90, *Air-Conditioning and Refrigerating Equipment Nameplate Voltages,* Air-Conditioning and Refrigeration Institute
- ARI Standard 700–95, *Specifications for Fluorocarbon and Other Refrigerants,* Air-Conditioning and Refrigeration Institute
- ASHRAE Terminology of Heating, Ventilation, Air Conditioning, Refrigeration, & Refrigeration, American Society of Heating, Refrigerating, and Air-Conditioning Engineers, Inc., 1991
- IEC Standard Publication 38, *IEC Standard Voltages,* International Electrotechnical Commission, 1983

ATTACHMENT 2 TO APPENDIX B2 TO SUBPART F OF PART 82-PARTICULATE USED IN STANDARD CONTAMINATED REFRIGERANT SAMPLE

1. Particulate Specification

B1.1 The particulate material (pm) will be a blend of 50% coarse air cleaner dust as received, and 50% retained on a 200-mesh screen. The coarse air cleaner dust is available from: AC Spark Plug Division; General Motors Corporation; Flint, Michigan.

B1.2 *Preparation of Particulate Materials.*

To prepare the blend of contaminant, first wet screen a quantity of coarse air cleaner dust on a 200-mesh screen (particle retention 74 pm). This is done by placing a portion of the dust on a 200-mesh screen and running water through the screen while stirring the dust with the fingers. The fine contaminant particles passing through the screen are discarded. The +200-mesh particles collected on the screen are removed and dried for one hour at 110 °C. The blend of standard contaminant is prepared by mixing 50% by weight of coarse air cleaner dust as received (after drying for one hour at 110 °C) with 50% by weight of the +200 mesh screened dust.

B1.3 *Particle Size Analysis.*

The coarse air cleaner dust as received and the blend used as the standard contaminant have the following approximate particle size analysis:

Wt. % in various size ranges, pm.

Size range	As received	Blend
0–5	12	6
5–10	12	6
10–20	14	7
20–40	23	11
40–80	30	32
80–200	9	38

[68 FR 43815, July 24, 2003; 68 FR 54678, Sept. 18, 2003]

APPENDIX C TO SUBPART F OF PART 82—METHOD FOR TESTING RECOVERY DEVICES FOR USE WITH SMALL APPLIANCES

Recovery Efficiency Test Procedure for Refrigerant Recovery Equipment Used on Small Appliances

The following test procedure is utilized to evaluate the efficiency of equipment designed to recover ozone depleting refrigerants (or any substitute refrigerant subject to the recycling rules promulgated pursuant to section 608 of the Clean Air Act Amendments of 1990) from small appliances when service of those appliances requires entry into the sealed refrigeration system or when those appliances are destined for disposal. This procedure is designed to calculate on a weight or mass basis the percentage of a known charge of CFC-12 refrigerant removed and captured from a test stand refrigeration system. Captured refrigerant is that refrigerant delivered to a container suitable for shipment to a refrigerant reclaimer plus any refrigerant remaining in the recovery system in a manner that it will be transferred to a shipping container after additional recovery operations.

The test stand refrigeration system required for this procedure is constructed with standard equipment utilized in currently produced household refrigerator and freezer products. The procedure also accounts for compressor oils that might be added to or removed from the test stand compressor or any compressor used in the recovery system.

I. TEST STAND

Test stands are constructed in accordance with the following standards.

1. Evaporator—5/16 in. outside dia. with 30 cu. in. volume.
2. Condenser—1/4 in. outside dia. with 20 cu. in volume.
3. Suction line capillary heat exchanger—appropriate for compressor used.
4. An 800–950 Btu/hr high side case (rotary) compressor; or (depending on the test senario);
5. An 800–9500 Btu/hr low side case (reciprocating) compressor.

A person seeking to have its recovery system certified shall specify the compressors by manufacturer and model that are to be used in test stands constructed for evaluation of its equipment, and the type and quantity of compressor to be used in those compressors. Only a compressor oil approved for use by the compressor's manufacturer may be specified, and the quantity of compressor oil specified shall be an appropriate quantity for the type of oil and compressor to be used. In order to reduce the cost of testing, the person seeking certification of its recovery system may supply an EPA approved third party testing laboratory with test stands meeting these standards for use in evaluating its recovery system.

II. TEST CONDITIONS

Tests are to be conducted at 75 degrees F, plus or minus 2 degrees F (23.9 C ±1.1 C). Separate tests are conducted on both high side case compressor stands and low side case compressor stands. Separate tests are also conducted with the test stand compressor running during the recovery operation, and without the test stand compressor running during the recovery operation, to calculate the system's recovery efficiency under either condition.

These tests are to be performed using a representative model of all equipment used in the recovery system to deliver recovered refrigerant to a container suitable for shipment to a refrigerant reclaimer. The test stands are to be equipped with access valves permanently installed as specific by the recovery system's vendor to represent the valves used with that system in actual field operations.

A series of five (5) recovery operations are to be performed for each compressor scenario and a recovery efficiency is calculated based on the total quantity of refrigerant captured during all five (5) recoveries. Alternatively, at the request of the recovery system's vendor, a recovery efficiency is to be calculated for each recovery event. In this case, a statistically significant number of recovery operations are to be performed. Determination of what is a statistically significant number of recoveries is to be calculated as set out below. These individual recovery efficiencies are then averaged.

There are four (4) compressor scenarios to be tested. These are a high side case compressor in working condition; a high side case compressor in nonworking condition; a low side case compressor in working condition; and a low side case compressor in nonworking condition. Recovery efficiencies calculated for the two working compressor scenarios are to be averaged to report a working compressor performance. The two nonworking compressor efficiencies are also to be averaged to report a nonworking compressor performance.

If large scale equipment is required in the system to deliver recovered refrigerant to a refrigerant reclaimer (eg. carbon desorption equipment) and it is not possible to have that equipment evaluated under the procedure, the system's vendor shall obtain engineering data on the performance of that large scale equipment that will reasonably demonstrate the percentage refrigerant lost when processed by that equipment. That data will be supplied to any person required to evaluate the performance of those systems. The following procedure will also be modified as needed to determine the weight

of refrigerant recovered from a test stand and delivered to a container for shipment to the large process equipment for further processing. The percentage loss documented to occur during processing is then to be applied to the recovery efficiencies calculated in this modified procedure to determine the overall capture efficiency for the entire system.

The following are definitions of symbols used in the test procedure.

Test Stand:

''TSO'' means an original test stand weight.

''TSC'' means a charged test stand weight.

Shipping Containers:

''SCO'' means the original or empty weight of shipping container(s).

''SCF'' means the final or full weight of shipping container(s).

Recover/Transfer System:

''RSO'' means the original weight of a recovery/transfer system.

''RSF'' means the final weight of a recovery/transfer system.

''OL'' means the net amount of oil added/removed from the recovery device and/or transfer device between the beginning and end of the test for one compressor scenario.

Weighing steps are conducted with precision and accuracy of plus or minus 1.0 gram.

III. Test Procedure

1. Evacuate the test stand to 20 microns vacuum (pressure measured at a vacuum pump) for 12 hours.
2. Weigh the test stand (TSO).
3. If this is the first recovery operation being performed for a compressor scenario (or if a recovery efficiency is to be calculated for each recovery event), then weigh all devices used in the recovery system to deliver recovered refrigerant to a container suitable for shipment or delivery to a refrigerant reclaimer. Weigh only devices that can retain refrigerant in a manner that it will ultimately be transferred to a shipping container without significant release to the atmosphere (RSO).
4. Weigh final shipping containers (SCO).
5. Charge the test stand with an appropriate CFC-12 charge (either 6 oz. or 9 oz.).
6. Run the test stand for four (4) hours with 100% run time.
7. Turn off the test stand for twelve (12) hours. During this period evaporate all condensation that has collected on the test stand during step 6.
8. Weigh the test stand (TSC).
9. Recover CFC-12 from the test stand and perform all operations needed to transfer the recovered refrigerant to one of the shipping containers weighed in step 4. All recovery and transfer operations are to be performed in accordance with the operating instructions provided by the system's vendor. The compressor in the test stand is to remain ''off'' or be turned ''on'' during the recovery operation depending on whether the test is for a nonworking or working compressor performance evaluation. If a recovery efficiency is to be calculated for each recovery event, transfer the captured refrigerant to a shipping container and then skip to step 13. Otherwise continue. If the system allows for multiple recovery operations to be performed before transferring recovered refrigerant to a shipping container, the transfer operation can be delayed until either the maximum number of recovery operations allowed before a transfer is required have been performed, or the last of the five (5) recovery operations has been performed.
10. Perform any oil removal or oil addition operations needed to properly maintain the test stand and the devices used for recovery or transfer operations. Determine the net weight of the oil added or removed from the recovery device and/or transfer device. (OP1 for oil added, OP2 for oil removed).
11. Evacuate the test stand to 20 microns vacuum for 4 hours.
12. Return to step 2 unless five (5) recovery operations have been performed.
13. Weigh all final shipping containers that received recovered refrigerant (SCF).
14. Weigh the equipment weighed in step three (3) above (RSF). If a recovery efficiency is to be calculated for each recovery event, perform calculations and return to step one (1) for additional recoveries.

IV. Calculations

A. *For Five (5) Consecutive Recoveries*

Refrigerant Recoverable equals the summation of charged test stand weights minus original test stand weights.

$$\text{Refrigerant Recoverable} = \sum_{i=1}^{5} \left(TSC_i - TSO_i\right)$$

Oil Loss equals the net weight of oil added to and removed from the recovery device and/or transfer device.

$$OL = \sum_{i=1}^{5} \left(OP1_i - OP2_i\right)$$

Refrigerant Recovered equals the final weight of shipping containers minus the initial weight of final shipping containers, plus final recovery system weight, minus original recovery system weight, plus the net value of all additions and removals of oil from the recovery and transfer devices.

$$\text{Refrigerant Recovered} = \left(\sum_{i=1}^{n} SCF_i - SCO_i\right) + RSF - RSO - OL$$

n=number of shipping containers used.

Recovery Efficiency equals Refrigerant Recovered divided by Refrigerant Recoverable times 100%.

$$\text{Recovery Efficiency} = \frac{\text{Refrigerant Recovered}}{\text{Refrigerant Recoverable}}\ 100\%$$

B. *For Individual Recoveries*

Refrigerant Recoverable equals the charged test stand weight minus the original test stand weight.

$$\text{Refrigerant Recoverable} = TSCO - TSO$$

Refrigerant Recovered equals the final weight of the shipping container minus the initial weight of the shipping container plus the final weight of the recovery system minus the original recovery system weight.

$$\text{Refrigerant Recovered} = SCF - SCO + RSF - RSO$$

Recovery Efficiency equals Refrigerant Recovered divided by Refrigerant Recoverable times 100 percent.

$$\text{Recovery Efficiency} = \frac{\text{Refrigerant Recovered}}{\text{Refrigerant Recoverable}}\ 100\%$$

C. *Calculation of a Statistically Significant Number of Recoveries*

$$N_{add} = \left((t * sd) / (.10 * X)\right)^2 - N$$

Where:
N_{add}=the number of additional samples required to achieve 90% confidence.
sd=Standard deviation, or $(X/(N-1)^{5})$
X=Sample average
N=Number of samples tested

Number of samples	t for 90% confidence
2	6.814
3	2.920
4	2.353
5	2.132
6	2.015
7	1.943
8	1.895
9	1.860
10	1.833

Procedure:
1. Compute N_{add} after completing two recoveries.
2. If $N_{add}>0$, then run an additional test.
3. Re-compute N_{add}. Continue to test additional samples until $N_{add}<0$.

V. Test Procedure Approval and Certification

Each vendor of capture equipment for small appliances desiring certification will provide a representative model of its capture system and its recommended recovery procedures to an EPA approved third party laboratory for testing in accordance with this procedure. The third party laboratory will certify recovery systems that when tested in accordance with this procedure demonstrate a sufficient recovery efficiency to meet EPA regulatory requirements.

Appendix D to Subpart F of Part 82—Standards for Becoming a Certifying Program for Technicians

Standards for Certifying Programs

a. Test Preparation

Certification for Type II, Type III and Universal technicians will be dependent upon passage of a closed-book, proctored test, administered in a secure environment, by an EPA-approved certifying program.

Certification for Type I technicians will be dependent upon passage of an EPA-approved test, provided by an EPA-approved certifying program. Organizations providing Type I certification only, may chose either an on-site format, or a mail-in format, similar to what is permitted under the MVACs program.

Each certifying program must assemble tests by choosing a prescribed subset from the EPA test bank. EPA expects to have a test bank with a minimum of 500 questions, which will enable the certifying program to generate multiple tests in order to discourage cheating. Each test must include 25 questions drawn from Group 1 and 25 questions drawn from each relevant technical Group. Tests for Universal technicians will include 100 questions (25 from Group 1 and 25 from each relevant technical Group). Each 50-question test represents 10 percent of the total test bank. Questions should be divided in order to sufficiently cover each topic within the Group.

Each certifying program must show a method of randomly choosing which questions will be on the tests. Multiple versions of the test must be used during each testing event. Test answer sheets or (for those testing via the computer medium) computer files must include the name and address of the applicant, the name and address of the certifying program, and the date and location at which the test was administered.

Training material accompanying mail-in Type I tests must not include sample test questions mimicking the language of the certification test. All mail-in material will be subject to review by EPA.

Certifying programs may charge individuals reasonable fees for the administration of the tests. EPA will publish a list of all approved certifying programs periodically, including the fees charged by the programs. This information will be available from the Stratospheric Ozone Protection Hotline.

b. Proctoring

A certifying program for Type II, Type III and Universal technicians must designate or

arrange for the designation of at least one proctor registered for each testing event. If more than 50 people are taking tests at the same time at a given site, the certifying organization must adhere to normal testing procedures, by designating at least one additional proctor or monitor for every 50 people taking tests at that site.

The certification test for Type II, Type III and Universal technicians is a closed-book exam. The proctors must ensure that the applicants for certification do not use any notes or training materials during testing. Desks or work space must be placed in a way that discourages cheating. The space and physical facilities are to be conducive to continuous surveillance by the proctors and monitors during testing.

The proctor may not receive any benefit from the outcome of the testing other than a fee for proctoring. Proctors cannot know in advance which questions are on the tests they are proctoring.

Proctors are required to verify the identity of individuals taking the test by examining photo identification. Acceptable forms of identification include but are not limited to drivers' licenses, government identification cards, passports, and military identification.

Certifying programs for Type I technicians using the mail-in format, must take sufficient measures at the test site to ensure that tests are completed honestly by each technician. Each test for Type I certification must provide a means of verifying the identification of the individual taking the test. Acceptable forms of identification include but are not limited to drivers' licenses numbers, social security numbers, and passport numbers.

c. Test Security

A certifying program must demonstrate the ability to ensure the confidentiality and security of the test questions and answer keys through strict accountability procedures. An organization interested in developing a technician certification program will be required to describe these test security procedures to EPA.

After the completion of a test, proctors must collect all test forms, answer sheets, scratch paper and notes. These items are to be placed in a sealed envelope.

d. Test Content

All technician certification tests will include 25 questions from Group I. Group I will ask questions in the following areas:

I. Environmental impact of CFCs and HCFCs

II. Laws and regulations

III. Changing industry outlook

Type I, Type II and Type III certification tests will include 25 questions from Group II. Group II will ask questions covering sector-specific issues in the following areas:

IV. Leak detection

V. Recovery Techniques

VI. Safety

VII. Shipping

VII. Disposal

Universal Certification will include 75 questions from Group II, with 25 from each of the three sector-specific areas.

e. Grading

Tests must be graded objectively. Certifying programs must inform the applicant of their test results no later than 30 days from the date of the test. Type I certifying programs using the mail-in format, must notify the applicants of their test results no later than 30 days from the date the certifying programs received the completed test and any required documentation. Certifying programs may mail or hand deliver the results.

The passing score for the closed-book Type I, Type II, Type III and Universal certification test is 70 percent. For Type I certification tests using the mail-in format, passing score is 84 percent.

f. Proof of Certification

Certifying programs must issue a standard wallet-sized identification card no later than 30 days from the date of the test. Type I certifying programs using mail-in formats must issue cards to certified technicians no later than 30 days from the date the certifying program receives the completed test and any required documentation.

Each wallet-sized identification card must include, at a minimum, the name of the certifying program including the date the certifying program received EPA approval, the name of the person certified, the type of certification, a unique number for the certified person and the following text:

[name of person] has been certified as [Type I, Type II, Type III and/or Universal—as appropriate] technician as required by 40 CFR part 82, subpart F.

g. Recordkeeping and Reporting Requirements

1. Certifying programs must maintain records that include, but are not limited to, the names and addresses of all individuals taking the tests, the scores of all certification tests administered, and the dates and locations of all testing administered.

2. EPA must receive an activity report from all approved certifying programs by every January 30 and June 30, the first to be submitted following the first full six-month period for which the program has been approved by EPA. This report will include the pass/fail rate and testing schedules. This will allow the Agency to determine the relative progress and success of these programs. If

the certifying program believes a test bank question needs to be modified, information about that question should also be included.

3. Approved certifying programs will receive a letter of approval from EPA. Each testing center must display a copy of that letter at their place of business.

4. Approved technician certification programs that voluntarily plan to stop providing the certification test must forward all records required by this appendix, §§ 82.161, and 82.166 to another program currently approved by EPA in accordance with this appendix and with § 82.161. Approved technician certification programs that receive records of certified technicians from a program that no longer offers the certification test must inform EPA in writing at the address listed in § 82.160 within 30 days of receiving these records. The notification notice must include the name and address of the program to which the records have been transferred. If another currently approved program willing to accept the records cannot be located, these records must be submitted to EPA at the address listed at § 82.160.

5. Technician certification programs that have had their certification revoked in accordance with § 82.169 must forward all records required by this appendix, §§ 82.161, and 82.166 to EPA at the address listed in § 82.160.

h. Additional Requirements

EPA will periodically inspect testing sites to ensure compliance with EPA regulations. If testing center discrepancies are found, they must be corrected within a specified time period. If discrepancies are not corrected, EPA may suspend or revoke the certifying programs's approval. The inspections will include but are not limited to a review of the certifying programs' provisions for test security, the availability of space and facilities to conduct the administrative requirements and ensure the security of the tests, the availability of adequate testing facilities and spacing of the applicants during testing, a review of the proper procedures regarding accountability, and that there is no evidence of misconduct on the part of the certifying programs, their representatives and proctors, or the applicants for certification.

If the certifying programs offer training or provide review materials to the applicants, these endeavors are to be considered completely separate from the administration of the certification test.

i. Approval Process

EPA anticipates receiving a large number of applications from organizations seeking to become certifying programs. In order to certify as many technicians as possible in a reasonable amount of time, EPA will give priority to national programs. Below are the guidelines EPA will use:

First: Certifying programs providing at least 25 testing centers with a minimum of one site in at least 8 different states will be considered.

Second: Certifying programs forming regional networks with a minimum of 10 testing centers will be considered.

Third: Certifying programs providing testing centers in geographically isolated areas not sufficiently covered by the national or regional programs will be considered.

Fourth: All other programs applying for EPA approval will be considered.

Sample application forms may be obtained by contacting the Stratopheric Ozone Hotline at 1–800–296–1996.

j. Grandfathering

EPA will grandfather technicians who successfully completed voluntary programs whose operators seek and receive EPA approval to grandfather these technicians, in accordance with § 82.161(g). As part of this process, these certifying programs may be required to send EPA-approved supplementary information to ensure the level of the technicians' knowledge. Technicians will be required to read this supplementary information as a condition of certification. The certifying programs will also issue new identification cards meeting the requirements specified above.

k. Sample Application

EPA has provided a sample application. The Agency designed the application to demonstrate the information certifying programs must provide to EPA. Programs are not required to use this form or this format.

[58 FR 28712, May 14, 1993, as amended at 59 FR 42960, 42962, Aug. 19, 1994; 59 FR 55927, Nov. 9, 1994; 68 FR 54678, Sept. 18, 2003]

Subpart G—Significant New Alternatives Policy Program

SOURCE: 59 FR 13147, Mar. 18, 1994, unless otherwise noted.

§ 82.170 Purpose and scope.

(a) The purpose of these regulations in this subpart is to implement section 612 of the Clean Air Act, as amended, regarding the safe alternatives policy on the acceptability of substitutes for ozone-depleting compounds. This program will henceforth be referred to as the ''Significant New Alternatives Policy'' (SNAP) program. The objectives

of this program are to identify substitutes for ozone-depleting compounds, to evaluate the acceptability of those substitutes, to promote the use of those substitutes believed to present lower overall risks to human health and the environment, relative to the class I and class II compounds being replaced, as well as to other substitutes for the same end-use, and to prohibit the use of those substitutes found, based on the same comparisons, to increase overall risks.

(b) The regulations in this subpart describe persons and substitutes subject to reporting requirements under the SNAP program and explain preparation and submission of notices and petitions on substitutes. The regulations also establish Agency procedures for reviewing and processing EPA's determinations regarding notices and petitions on substitutes. Finally, the regulations prohibit the use of alternatives which EPA has determined may have adverse effects on human health or the environment where EPA has identified alternatives in particular industrial use sectors that on an overall basis, reduce risk to human health and the environment and are currently or potentially available. EPA will only prohibit substitutes where it has identified other substitutes for a specific application that are acceptable and are currently or potentially available.

(c) Notifications, petitions and other materials requested shall be sent to: SNAP Document Control Officer, U.S. Environmental Protection Agency (6205–J), 1200 Pennsylvania Ave., NW., Washington, DC 20460.

§ 82.172 Definitions.

Act means the Clean Air Act, as amended, 42 U.S.C. 7401 *et seq.*

Agency means the U.S. Environmental Protection Agency.

Application means a specific use within a major industrial sector end-use.

Class I or class II means the specific ozone-depleting compounds described in section 602 of the Act.

Decision means any final determination made by the Agency under section 612 of the Act on the acceptability or unacceptability of a substitute for a class I or II compound.

EPA means the U.S. Environmental Protection Agency.

End-use means processes or classes of specific applications within major industrial sectors where a substitute is used to replace an ozone-depleting substance.

Formulator means any person engaged in the preparation or formulation of a substitute, after chemical manufacture of the substitute or its components, for distribution or use in commerce.

Health and safety study or *study* means any study of any effect of a substitute or its components on health and safety, or the environment or both, including underlying data and epidemiological studies, studies of occupational, ambient, and consumer exposure to a substitute, toxicological, clinical, and ecological, or other studies of a substitute and its components, and any other pertinent test. Chemical identity is always part of a health and safety study. Information which arises as a result of a formal, disciplined study is included in the definition. Also included is information relating to the effects of a substitute or its components on health or the environment. Any available data that bear on the effects of a substitute or its components on health or the environment would be included. Examples include:

(1) Long- and short-term tests of mutagenicity, carcinogenicity, or teratogenicity; data on behavioral disorders; dermatoxicity; pharmacological effects; mammalian absorption, distribution, metabolism, and excretion; cumulative, additive, and synergistic effects; acute, subchronic, and chronic effects; and structure/activity analyses;

(2) Tests for ecological or other environmental effects on invertebrates, fish, or other animals, and plants, including: Acute toxicity tests, chronic toxicity tests, critical life stage tests, behavioral tests, algal growth tests, seed germination tests, microbial function tests, bioconcentration or bioaccumulation tests, and model ecosystem (microcosm) studies;

(3) Assessments of human and environmental exposure, including workplace exposure, and effects of a particular substitute on the environment, including surveys, tests, and studies of:

Biological, photochemical, and chemical degradation; air, water and soil transport; biomagnification and bioconcentration; and chemical and physical properties, e.g., atmospheric lifetime, boiling point, vapor pressure, evaporation rates from soil and water, octanol/water partition coefficient, and water solubility;

(4) Monitoring data, when they have been aggregated and analyzed to measure the exposure of humans or the environment to a substitute; and

(5) Any assessments of risk to health or the environment resulting from the manufacture, processing, distribution in commerce, use, or disposal of the substitute or its components.

Importer means any person who imports a chemical substitute into the United States. *Importer* includes the person primarily liable for the payment of any duties on the merchandise or an authorized agent acting on his or her behalf. The term also includes, as appropriate:

(1) The consignee;

(2) The importer of record;

(3) The actual owner; and

(4) The transferee, if the right to draw merchandise in a bonded warehouse has been transferred.

Major Industrial Use Sector or Sector means an industrial category which EPA has reviewed under the SNAP program with historically high consumption patterns of ozone-depleting substances, including: Refrigeration and air conditioning; foam-blowing; fire suppression and explosion protection; solvents cleaning; aerosols; sterilants; tobacco expansion; pesticides; and adhesives, coatings and inks sectors.

Manufacturer means any person engaged in the direct manufacture of a substitute.

Mixture means any mixture or blend of two or more compounds.

Person includes an individual, corporation, partnership, association, state, municipality, political subdivision of a state, and any agency, department, or instrumentality of the United States and any officer, agent, or employee of such entities.

Pesticide has the meaning contained in the Federal Insecticide, Fungicide, and Rodenticide Act, 7 U.S.C. 136 *et seq.* and the regulations issued under it.

Potentially available is defined as any alternative for which adequate health, safety, and environmental data, as required for the SNAP notification process, exist to make a determination of acceptability, and which the Agency reasonably believes to be technically feasible, even if not all testing has yet been completed and the alternative is not yet produced or sold.

Premanufacture Notice (PMN) Program has the meaning described in 40 CFR part 720, subpart A promulgated under the Toxic Substances Control Act, 15 U.S.C. 2601 *et seq.*

Producer means any person who manufactures, formulates or otherwise creates a substitute in its final form for distribution or use in interstate commerce.

Research and development means quantities of a substitute manufactured, imported, or processed or proposed to be manufactured, imported, or processed solely for research and development.

Residential use means use by a private individual of a chemical substance or any product containing the chemical substance in or around a permanent or temporary household, during recreation, or for any personal use or enjoyment. Use within a household for commercial or medical applications is not included in this definition, nor is use in automobiles, watercraft, or aircraft.

Significant new use means use of a new or existing substitute in a major industrial use sector as a result of the phaseout of ozone-depleting compounds.

Small uses means any use of a substitute in a sector other than a major industrial use sector, or production by any producer for use of a substitute in a major industrial sector of 10,000 lbs. or less per year.

Substitute or alternative means any chemical, product substitute, or alternative manufacturing process, whether existing or new, intended for use as a replacement for a class I or II compound.

Test marketing means the distribution in interstate commerce of a substitute to no more than a limited, defined number of potential customers to explore market viability in a competitive situation. Testing must be restricted

to a defined testing period before the broader distribution of that substitute in interstate commerce.

Use means any use of a substitute for a Class I or Class II ozone-depleting compound, including but not limited to use in a manufacturing process or product, in consumption by the end-user, or in intermediate uses, such as formulation or packaging for other subsequent uses.

Use restrictions means restrictions on the use of a substitute imposing either conditions on how the substitute can be used across a sector end-use or limits on the end-uses or specific applications where it can be used within a sector.

§ 82.174 Prohibitions.

(a) No person may introduce a new substitute into interstate commerce before the expiration of 90 days after a notice is initially submitted to EPA under § 82.176(a).

(b) No person may use a substitute which a person knows or has reason to know was manufactured, processed or imported in violation of the regulations in this subpart, or knows or has reason to know was manufactured, processed or imported in violation of any use restriction in the acceptability determination, after the effective date of any rulemaking imposing such restrictions.

(c) No person may use a substitute without adhering to any use restrictions set by the acceptability decision, after the effective date of any rulemaking imposing such restrictions.

(d) No person may use a substitute after the effective date of any rulemaking adding such substitute to the list of unacceptable substitutes.

(e) *Rules Stayed for Reconsideration.* Notwithstanding any other provision of this subpart, the effectiveness of subpart G is stayed from December 8, 1994, to March 8, 1995, only as applied to use of substitutes for export.

[59 FR 13147, Mar. 18, 1994, as amended at 59 FR 63256, Dec. 8, 1994; 60 FR 3303, Jan. 13, 1995]

§ 82.176 Applicability.

(a) Any producer of a new substitute must submit a notice of intent to introduce a substitute into interstate commerce 90 days prior to such introduction. Any producer of an existing substitute already in interstate commerce must submit a notice as of July 18, 1994, if such substitute has not already been reviewed and approved by the Agency.

(b) With respect to the following substitutes, producers are exempt from notification requirements:

(1) *Substitutes already listed as acceptable.* Producers need not submit notices on substitutes that are already listed as acceptable under SNAP.

(2) *Small sectors.* Persons using substitutes in sectors other than the nine principal sectors reviewed under this program are exempt from the notification requirements. This exemption shall not be construed to nullify an unacceptability determination or to allow use of an otherwise unacceptable substitute.

(3) *Small volume use within SNAP sectors.* Within the nine principal SNAP sectors, persons introducing a substitute whose expected volume of use amounts to less than 10,000 lbs. per year within a SNAP sector are exempt from notification requirements. This exemption shall not be construed to allow use of an otherwise unacceptable substitute in any quantity. Persons taking advantage of this exemption for small uses must maintain documentation for each substitute describing how the substitute meets this small use definition. This documentation must include annual production and sales information by sector.

(4) *Research and development.* Production of substitutes for the sole purpose of research and development is exempt from reporting requirements.

(5) *Test marketing.* Use of substitutes for the sole purpose of test marketing is exempt from SNAP notification requirements until 90 days prior to the introduction of such substitutes for full-scale commercial sale in interstate commerce. Persons taking advantage of this exemption are, however, required to notify the Agency in writing that they are conducting test marketing 30 days prior to the commencement of such marketing. Notification shall include the name of the substitute, the volume used in the test marketing, intended sector end-uses,

and expected duration of the test marketing period.

(6) *Formulation changes*. In cases where replacement of class I or II compounds causes formulators to change other components in a product, formulators are exempt from reporting with respect to these auxiliary formulation changes. However, the SNAP submitter is required to notify the Agency if such changes are expected to significantly increase the environmental and human health risk associated with the use of any class I or class II substitute.

(7) *Substitutes used as feedstocks*. Producers of substitutes used as feedstocks which are largely or entirely consumed, transformed or destroyed in the manufacturing or use process are exempt from reporting requirements concerning such substitutes.

(c) Use of a substitute in the possession of an end-user as of March 18, 1994, listed as unacceptable or acceptable subject to narrowed use limits may continue until the individual end-users' existing supply, as of that date, of the substitute is exhausted. Use of substitutes purchased after March 18, 1994, is not permitted subsequent to April 18, 1994.

§ 82.178 Information required to be submitted.

(a) Persons whose substitutes are subject to reporting requirements pursuant to § 82.176 must provide the following information:

(1) *Name and description of the substitute*. The substitute should be identified by its: Chemical name; trade name(s); identification numbers; chemical formula; and chemical structure.

(2) *Physical and chemical information*. The substitute should be characterized by its key properties including but not limited to: Molecular weight; physical state; melting point; boiling point; density; taste and/or odor threshold; solubility; partition coefficients (Log K_{ow}, Log K_{oc}); atmospheric lifetime and vapor pressure.

(3) *Substitute applications*. Identification of the applications within each sector end-use in which the substitutes are likely to be used.

(4) *Process description*. For each application identified, descriptive data on processing, including in-place pollution controls.

(5) *Ozone depletion potential*. The predicted 100-year ozone depletion potential (ODP) of substitute chemicals. The submitter must also provide supporting documentation or references.

(6) *Global warming impacts*. Data on the total global warming potential of the substitute, including information on the GWP index and the indirect contributions to global warming caused by the production or use of the substitute (e.g., changes in energy efficiency). GWP must be calculated over a 100, 500 and 1000-year integrated time horizon.

(7) *Toxicity data*. Health and safety studies on the effects of a substitute, its components, its impurities, and its degradation products on any organism (e.g., humans, mammals, fish, wildlife, and plants). For tests on mammals, the Agency requires a minimum submission of the following tests to characterize substitute risks: A range-finding study that considers the appropriate exposure pathway for the specific use (e.g., oral ingestion, inhalation, etc.), and a 90-day subchronic repeated dose study in an appropriate rodent species. For certain substitutes, a cardiotoxicity study is also required. Additional mammalian toxicity tests may be identified based on the substitute and application in question. To sufficiently characterize aquatic toxicity concerns, both acute and chronic toxicity data for a variety of species are required. For this purpose, the Agency requires a minimum data set as described in ''Guidelines for Deriving Numerical National Water Quality Criteria for the Protection of Aquatic Organisms and their Uses,'' which is available through the National Technical Information Service (#PB 85–227049). Other relevant information and data summaries, such as the Material Safety Data Sheets (MSDS), should also be submitted. To assist in locating any studies previously submitted to EPA and referred to, but not included in a SNAP submission, the submitter must provide citations for the date, type of submission, and EPA Office to which they were submitted, to help EPA locate these quickly.

(8) *Environmental fate and transport*. Where available, information must be

submitted on the environmental fate and transport of substitutes. Such data shall include information on bioaccumulation, biodegradation, adsorption, volatility, transformation, and other data necessary to characterize movement and reaction of substitutes in the environment.

(9) *Flammability*. Data on the flammability of a substitute chemical or mixture are required. Specifically, the flash point and flammability limits are needed, as well as information on the procedures used for determining the flammability limits. Testing of blends should identify the compositions for which the blend itself is flammable and include fractionation data on changes in the composition of the blend during various leak scenarios. For substitutes that will be used in consumer applications, documentation of testing results conducted by independent laboratories should be submitted, where available. If a substitute is flammable, the submitter must analyze the risk of fire resulting from the use of such a substitute and assess the effectiveness of measures to minimize such risk.

(10) *Exposure data*. Available modeling or monitoring data on exposures associated with the manufacture, formulation, transport, use and disposal of a substitute. Descriptive process information for each substitute application, as described above, will be used to develop exposure estimates where exposure data are not readily available. Depending on the application, exposure profiles may be needed for workers, consumers, and the general population.

(11) *Environmental release data*. Data on emissions from the substitute application and equipment, as well as on pollutant releases or discharge to all environmental media. Submitters should provide information on release locations, and data on the quantities, including volume, of anticipated waste associated with the use of the substitute. In addition, information on anticipated waste management practices associated with the use of the substitute. Any available information on any pollution controls used or that could be used in association with the substitute (e.g., emissions reduction technologies, wastewater treatment, treatment of hazardous waste) and the costs of such technology must also be submitted.

(12) *Replacement ratio for a chemical substitute*. Information on the replacement ratio for a chemical substitute versus the class I or II substances being replaced. The term ''replacement ratio'' means how much of a substitute must be used to replace a given quantity of the class I or II substance being replaced.

(13) *Required changes in use technology*. Detail on the changes in technology needed to use the alternative. Such information should include a description of whether the substitute can be used in existing equipment—with or without some retrofit—or only in new equipment. Data on the cost (capital and operating expenditures) and estimated life of any technology modifications should also be submitted.

(14) *Cost of substitute*. Data on the expected average cost of the alternative. In addition, information is needed on the expected equipment lifetime for an alternative technology. Other critical cost considerations should be identified, as appropriate.

(15) *Availability of substitute*. If the substitute is not currently available, the timing of availability of a substitute should be provided.

(16) *Anticipated market share*. Data on the anticipated near-term and long-term nationwide substitute sales.

(17) *Applicable regulations under other environmental statutes*. Information on whether the substitute is regulated under other statutory authorities, in particular the Clean Water Act, Safe Drinking Water Act, the Resource Conservation and Recovery Act, the Federal Insecticide, Fungicide, and Rodenticide Act, the Toxic Substances Control Act, the Comprehensive Environmental Response, Compensation and Liability Act, the Emergency Planning and Community Right-to-Know Act, or other titles under the Clean Air Act.

(18) *Information already submitted to the Agency*. Information requested in the SNAP program notice that has been previously submitted to the Agency as part of past regulatory and information-gathering activities may be referenced rather than resubmitted.

Submitters who cannot provide accurate references to data sent previously to the Agency should include all requested information in the SNAP notice.

(19) *Information already available in the literature*. If any of the data needed to complete the SNAP program notice are available in the public literature, complete references for such information should be provided.

(b) The Significant New Alternatives Policy (SNAP) Information Notice is designed to provide the Agency with the information necessary to reach a decision on the acceptability of a substitute.

(1) Submitters requesting review under the SNAP program should send the completed SNAP notice to: SNAP Document Control Officer, U.S. Environmental Protection Agency (6205–J), 1200 Pennsylvania Ave., NW., Washington, DC 20460.

(2) Submitters filing jointly under SNAP and the Premanufacture Notice Program (PMN) should send the SNAP addendum along with the PMN form to: PMN Document Control Officer, U.S. Environmental Protection Agency (7407), 1200 Pennsylvania Ave., NW., Washington, DC 20460. Submitters must also send both documents to the SNAP program, with a reference to indicate the notice has been furnished to the Agency under the PMN program. Submitters providing information on new chemicals for joint review under the TSCA and SNAP programs may be required to supply additional toxicity data under TSCA section 5.

(3) Submitters filing jointly under SNAP and under the Federal Insecticide, Fungicide, and Rodenticide Act should send the SNAP form to the Office of Pesticide Programs, Registration Division, (7505C) 1200 Pennsylvania Ave., NW., Washington, DC 20460, as well as to the SNAP Document Control Officer.

§ 82.180 Agency review of SNAP submissions.

(a) *Processing of SNAP notices*—(1) *90–day review process*. The 90-day review process will begin once EPA receives a submission and determines that such submission includes data on the substitute that are complete and adequate, as described in § 82.178. The Agency may suspend or extend the review period to allow for submission of additional data needed to complete the review of the notice.

(2) *Initial review of notice*. The SNAP Document Control Officer will review the notice to ensure that basic information necessary to process the submission is present (i.e., name of company, identification of substitute, etc.). The SNAP Document Control Officer will also review substantiation of any claim of confidentiality.

(3) *Determination of data adequacy*. Upon receipt of the SNAP submission, the Agency will review the completeness of the information supporting the application. If additional data are needed, the submitter will be contacted following completion of this review. The 90-day review period will not commence until EPA has received data it judges adequate to support analysis of the submission.

(4) *Letter of receipt*. The SNAP Document Control Officer will send a letter of receipt to the submitter to confirm the date of notification and the beginning of EPA's 90-day review period. The SNAP Document Control Officer will also assign the SNAP notice a tracking number, which will be identified in the letter of receipt.

(5) *Availability of new information during review period*. If critical new information becomes available during the review period that may influence the Agency's evaluation of a substitute, the submitter must notify the Agency about the existence of such information within 10 days of learning of such data. The submitter must also inform the Agency of new studies underway, even if the results will not be available within the 90-day review period. The Agency may contact the submitter to explore extending or suspending the review period depending on the type of information received and the stage of review.

(6) *Completion of detailed review*. Once the initial data review, described in paragraphs (a)(2) and (3) of this section, has been completed, the Agency will complete a detailed evaluation of the notice. If during any time the Agency perceives a lack of information necessary to reach a SNAP determination,

it will contact the submitter and request the missing data.

(7) *Criteria for review*. To determine whether a substitute is acceptable or unacceptable as a replacement for class I or II compounds, the Agency will evaluate:

(i) Atmospheric effects and related health and environmental impacts;

(ii) General population risks from ambient exposure to compounds with direct toxicity and to increased ground-level ozone;

(iii) Ecosystem risks;

(iv) Occupational risks;

(v) Consumer risks;

(vi) Flammability; and

(vii) Cost and availability of the substitute.

(8) *Communication of decision*—(i) *Communication of decision to the submitter*. Once the SNAP program review has been completed, the Agency will notify the submitter in writing of the decision. Sale or manufacture of new substitutes may commence after the initial 90-day notification period expires even if the Agency fails to reach a decision within the 90-day review period or fails to communicate that decision or the need for additional data to the submitter. Sale or manufacture of existing substitutes may continue throughout the Agency's 90-day review.

(ii) *Communication of decision to the public*. The Agency will publish in the FEDERAL REGISTER periodic updates to the list of the acceptable and unacceptable alternatives that have been reviewed to date. In the case of substitutes proposed as acceptable with use restrictions, proposed as unacceptable or proposed for removal from either list, a rulemaking process will ensue. Upon completion of such rulemaking, EPA will publish revised lists of substitutes acceptable subject to use conditions or narrowed use limits and unacceptable substitutes to be incorporated into the Code of Federal Regulations. (See Appendices to this subpart.)

(b) *Types of listing decisions*. When reviewing substitutes, the Agency will list substitutes in one of five categories:

(1) *Acceptable*. Where the Agency has reviewed a substitute and found no reason to prohibit its use, it will list the alternative as acceptable for the end-uses listed in the notice.

(2) *Acceptable subject to use conditions*. After reviewing a notice, the Agency may make a determination that a substitute is acceptable only if conditions of use are met to minimize risks to human health and the environment. Where users intending to adopt a substitute acceptable subject to use conditions must make reasonable efforts to ascertain that other alternatives are not feasible due to safety, performance or technical reasons, documentation of this assessment must be retained on file for the purpose of demonstrating compliance. This documentation shall include descriptions of substitutes examined and rejected, processes or products in which the substitute is needed, reason for rejection of other alternatives, e.g., performance, technical or safety standards. Use of such substitutes in ways that are inconsistent with such use conditions renders them unacceptable.

(3) *Acceptable subject to narrowed use limits*. Even though the Agency can restrict the use of a substitute based on the potential for adverse effects, it may be necessary to permit a narrowed range of use within a sector end-use because of the lack of alternatives for specialized applications. Users intending to adopt a substitute acceptable with narrowed use limits must ascertain that other alternatives are not technically feasible. Companies must document the results of their evaluation, and retain the results on file for the purpose of demonstrating compliance. This documentation shall include descriptions of substitutes examined and rejected, processes or products in which the substitute is needed, reason for rejection of other alternatives, e.g., performance, technical or safety standards, and the anticipated date other substitutes will be available and projected time for switching to other available substitutes. Use of such substitutes in applications and end-uses which are not specified as acceptable in the narrowed use limit renders them unacceptable.

(4) *Unacceptable*. This designation will apply to substitutes where the Agency's review indicates that the substitute poses risk of adverse effects to

human health and the environment and that other alternatives exist that reduce overall risk.

(5) *Pending.* Submissions for which the Agency has not reached a determination will be described as pending. For all substitutes in this category, the Agency will work with the submitter to obtain any missing information and to determine a schedule for providing the missing information if the Agency wishes to extend the 90-day review period. EPA will use the authority under section 114 of the Clean Air Act to gather this information, if necessary. In some instances, the Agency may also explore using additional statutory provisions (e.g., section 5 of TSCA) to collect the needed data.

(c) *Joint processing under SNAP and TSCA.* The Agency will coordinate reviews of substitutes submitted for evaluation under both the TSCA PMN program and the CAA.

(d) *Joint processing under SNAP and FIFRA.* The Agency will coordinate reviews of substitutes submitted for evaluation under both FIFRA and the CAA.

[59 FR 13147, Mar. 18, 1994, as amended at 61 FR 25592, May 22, 1996; 61 FR 54039, Oct. 16, 1996]

§ 82.182 Confidentiality of data.

(a) *Clean Air Act provisions.* Anyone submitting information must assert a claim of confidentiality at the time of submission for any data they wish to have treated as confidential business information (CBI) under 40 CFR part 2, subpart B. Failure to assert a claim of confidentiality at the time of submission may result in disclosure of the information by the Agency without further notice to the submitter. The submitter should also be aware that under section 114(c), emissions data may not be claimed as confidential.

(b) *Substantiation of confidentiality claims.* At the time of submission, EPA requires substantiation of any confidentiality claims made. Failure to provide any substantiation may result in disclosure of information without further notice by the Agency. All submissions must include adequate substantiation in order for an acceptability determination on a substitute to be published. Moreover, under 40 CFR part 2, subpart B, there are further instances in which confidentiality assertions may later be reviewed even when confidentiality claims are initially received. The submitter will also be contacted as part of such an evaluation process.

(c) *Confidentiality provisions for toxicity data.* In the event that toxicity or health and safety studies are listed as confidential, this information cannot be maintained as confidential where such data are also submitted under TSCA or FIFRA, to the extent that confidential treatment is prohibited under those statutes. However, information contained in a toxicity study that is not health and safety data and is not relevant to the effects of a substance on human health and the environment (e.g., discussion of process information, proprietary blends) can be maintained as confidential subject to 40 CFR part 2, subpart B.

(d) *Joint submissions under other statutes.* Information submitted as part of a joint submission to either SNAP/TSCA or SNAP/FIFRA must adhere to the security provisions of the program offices implementing these statutes. For such submissions, the SNAP handling of such notices will follow the security provisions under these statutes.

§ 82.184 Petitions.

(a) *Who may petition.* Any person may petition the Agency to amend existing listing decisions under the SNAP program, or to add a new substance to any of the SNAP lists.

(b) *Types of petitions.* Five types of petitions exist:

(1) Petitions to add a substitute not previously reviewed under the SNAP program to the acceptable list. This type of petition is comparable to the 90-day notifications, except that it would generally be initiated by entities other than the companies that manufacture, formulate, or otherwise use the substitute. Companies that manufacture, formulate, or use substitutes that want to have their substitutes added to the acceptable list should submit information on the substitute under the 90-day review program;

(2) Petitions to add a substitute not previously reviewed under the SNAP program to the unacceptable list;

(3) Petitions to delete a substitute from the acceptable list and add it to the unacceptable list or to delete a substitute from the unacceptable and add it to the acceptable list;

(4) Petitions to add or delete use restrictions on an acceptability listing.

(5) Petitions to grandfather use of a substitute listed as unacceptable or acceptable subject to use restrictions.

(c) *Content of the petition*. The Agency requires that the petitioner submit information on the type of action requested and the rationale for the petition. Petitions in paragraphs (b)(1) and (2) of this section must contain the information described in §82.178, which lists the items to be submitted in a 90-day notification. For petitions that request the re-examination of a substitute previously reviewed under the SNAP program, the submitter must also reference the prior submittal or existing listing. Petitions to grandfather use of an unacceptable substitute must describe the applicability of the test to judge the appropriateness of Agency grandfathering as established by the United States District Court for the District of Columbia Circuit (see *Sierra Club* v. *EPA*, 719 F.2d 436 (D.C. Cir. 1983)). This test includes whether the new rule represents an abrupt departure from previously established practice, the extent to which a party relied on the previous rule, the degree of burden which application of the new rule would impose on the party, and the statutory interest in applying the new rule immediately.

(d) *Petition process*. (1) Notification of affected companies. If the petition concerns a substitute previously either approved or restricted under the SNAP program, the Agency will contact the original submitter of that substitute.

(2) *Review for data adequacy*. The Agency will review the petition for adequacy of data. As with a 90-day notice, the Agency may suspend review until the petitioner submits the information necessary to evaluate the petition. To reach a timely decision on substitutes, EPA may use collection authorities such as those contained in section 114 of the Clean Air Act as amended, as well as information collection provisions of other environmental statutes.

(3) *Review procedures*. To evaluate the petition, the Agency may submit the petition for review to appropriate experts inside and outside the Agency.

(4) *Timing of determinations*. If data are adequate, as described in §82.180, the Agency will respond to the petition within 90 days of receiving a complete petition. If the petition is inadequately supported, the Agency will query the petitioner to fill any data gaps before the 90-day review period begins, or may deny the petition because data are inadequate.

(5) *Rulemaking procedures*. EPA will initiate rulemaking whenever EPA grants a petition to add a substance to the list of unacceptable substitutes, remove a substance from any list, or change or create an acceptable listing by imposing or deleting use conditions or use limits.

(6) *Communication of decision*. The Agency will inform petitioners within 90 days of receiving a complete petition whether their request has been granted or denied. If a petition is denied, the Agency will publish in the FEDERAL REGISTER an explanation of the determination. If a petition is granted, the Agency will publish the revised SNAP list incorporating the final petition decision within 6 months of reaching a determination or in the next scheduled update, if sooner, provided any required rulemaking has been completed within the shorter period.

APPENDIX A TO SUBPART G OF PART 82—SUBSTITUTES SUBJECT TO USE RESTRICTIONS AND UNACCEPTABLE SUBSTITUTES

REFRIGERANTS

Unacceptable Substitutes

End-use	Substitute	Decision	Comments
CFC-11 centrifugal chillers (retrofit).	HCFC-141b	Unacceptable	Has a high ODP relative to other alternatives.

REFRIGERANTS—Continued

Unacceptable Substitutes

End-use	Substitute	Decision	Comments
CFC-12 centrifugal chillers (retrofit).	HCFC-22/HFC-142b/ CFC-12.	Unacceptable	As a blend of both Class I and Class II substances, it has a higher ODP than use of Class II substances.
	Hydrocarbon blend A	Unacceptable	Flammability is a serious concern. Data have not been submitted to demonstrate it can used safely in this end-use.
CFC-11, CFC-12, CFC-113, CFC-114, R-500 centrifugal chillers (new equipment/NIKs).	HCFC-22/HFC-142b/ CFC-12.	Unacceptable	As a blend of both Class I and Class II substances, it has a higher ODP than use of Class II substances.
	Hydrocabon blend A	Unacceptable	Flammability is a serious concern. Data have not been submitted to demonstrate it can be used safely in this end-use.
	HCFC-141b	Unacceptable	Has a high ODP relative to other alternatives.
CFC-12 reciprocating chillers (retrofit).	HCFC-22/HFC-142b/ CFC-12.	Unacceptable	As a blend of both Class I and Class II substances, it has a higher ODP than use of Class II substances.
	Hydrocarbon blend A	Unacceptable	Flammability is a serious concern. Data have not been submitted to demonstrate it can be used safely in this end-use.
CFC-12 reciprocating chillers (new equipment/NIKs).	HCFC-22/HFC-142b/ CFC-12.	Unacceptable	As a blend of both Class I and Class II substances, it has a higher ODP than use of Class II substances.
	Hydrocarbon blend A	Unacceptable	Flammability is a serious concern. Data have not been submitted to demonstrate it can be used safely in this end-use.
CFC-11, CFC-12, R-502 industrial process refrigeration (retrofit).	HCFC-22/HFC-142b/ CFC-12.	Unacceptable	As a blend of both Class I and Class II substances, it has a higher ODP than use of Class II substances.
CFC-11, CFC-12, R-502 industrial process refrigeration (new equipment/NIKs).	HCFC-22/HFC-142b/ CFC-12.	Unacceptable	As a blend of both Class I and Class II substances, it has a higher ODP than use of Class II substances.
CFC-12, R-502 ice skating rinks (retrofit).	HCFC-22/HFC-142b/ CFC-12.	Unacceptable	As a blend of both Class I and Class II substances, it has a higher ODP than use of Class II substances.
	Hydrocarbon blend A	Unacceptable	Flammability is a serious concern. Data have not been submitted to demonstrate it can be used safely in this end-use.
CFC-12, R-502 ice skating rinks (new equipment/NIKs).	HCFC-22/HFC-142b/ CFC-12.	Unacceptable	As a blend of both Class I and Class II substances, it has a higher ODP than use of Class II substances.
	Hydrocarbon blend A	Unacceptable	Flammability is a serious concern. Data have not been submitted to demonstrate it can be used safely in this end-use.
CFC-12, R-502 cold storage warehouses (retrofit).	HCFC-22/HFC-142b/ CFC-12.	Unacceptable	As a blend of both Class I and Class II substances, it has a higher ODP than use of Class II substances.
	Hydrocarbon blend A	Unacceptable	Flammability is a serious concern. Data have not been submitted to demonstrate it can be used safely in this end-use.
CFC-12, R-502 cold storage warehouses (new equipment/NIKs).	HCFC-22/HFC-142b/ CFC-12.	Unacceptable	As a blend of both Class I and Class II substances, it has a higher ODP than use of Class II substances.
	Hydrocarbon blend A	Unacceptable	Flammability is a serious concern. Data have not been submitted to demonstrate it can be used safely in this end-use.
CFC-12, R-500, R-502 refrigerated transport (retrofit).	HCFC-22/HFC-142b/ CFC-12.	Unacceptable	As a blend of both Class I and Class II substances, it has a higher ODP than use of Class II substances.
	Hydrocarbon blend A	Unacceptable	Flammability is a serious concern. Data have not been submitted to demonstrate it can be used safely in this end-use.
CFC-12, R-500, R-502 refrigerated transport (new equipment/NIKs).	HCFC-22/HFC-142b/ CFC-12.	Unacceptable	As a blend of both Class I and Class II substances, it has a higher ODP than use of Class II substances.
	Hydrocarbon blend A	Unacceptable	Flammability is a serious concern. Data have not been submitted to demonstrate it can be used safely in this end-use.

REFRIGERANTS—Continued

Unacceptable Substitutes

End-use	Substitute	Decision	Comments
CFC-12, R-502 retail food refrigeration (retrofit).	HCFC-22/HFC-142b/CFC-12.	Unacceptable	As a blend of both Class I and Class II substances, it has a higher ODP than use of Class II substances.
	Hydrocarbon blend A	Unacceptable	Flammability is a serious concern. Data have not been submitted to demonstrate it can be used safely in this end-use.
CFC-12, R-502 retail food refrigeration (new equipment/NIKs).	HCFC-22/HFC-142b/CFC-12.	Unacceptable	As a blend of both Class I and Class II substances, it has a higher ODP than use of Class II substances.
	Hydrocarbon blend A	Unacceptable	Flammability is a serious concern. Data have not been submitted to demonstrate it can be used safely in this end-use.
CFC-12, R-502 commercial ice machines (retrofit).	HCFC-22/HFC-142b/CFC-12.	Unacceptable	As a blend of both Class I and Class II substances, it has a higher ODP than use of Class II substances.
	Hydrocarbon blend A	Unacceptable	Flammability is a serious concern. Data have not been submitted to demonstrate it can be used safely in this end-use.
CFC-12, R-502 commercial ice machines (new equipment/NIKs).	HCFC-22/HFC-142b/CFC-12.	Unacceptable	As a blend of both Class I and Class II substances, it has a higher ODP than use of Class II substances.
	Hydrocarbon blend A	Unacceptable	Flammability is a serious concern. Data have not been submitted to demonstrate it can be used safely in this end-use.
CFC-12 vending machines (retrofit).	HCFC-22/HFC-142b/CFC-12.	Unacceptable	As a blend of both Class I and Class II substances, it has a higher ODP than use of Class II substances.
	Hydrocarbon blend A	Unacceptable	Flammability is a serious concern. Data have not been submitted to demonstrate it can be used safely in this end-use.
CFC-12 vending machines (new equipment/NIKs).	HCFC-22/HFC-142b/CFC-12.	Unacceptable	As a blend of both Class I and Class II substances, it has a higher ODP than use of Class II substances.
	Hydrocarbon blend A	Unacceptable	Flammability is a serious concern. Data have not been submitted to demonstrate it can be used safely in this end-use.
CFC-12, water coolers (retrofit).	HCFC-22/HFC-142b/CFC-12.	Unacceptable	As a blend of both Class I and Class II substances, it has a higher ODP than use of Class II substances.
	Hydrocarbon blend A	Unacceptable	Flammability is a serious concern. Data have not been submitted to demonstrate it can be used safely in this end-use.
CFC-12, water coolers (New equipment/NIKs).	HCFC-22/HFC-142b/CFC-12.	Unacceptable	As a blend of both Class I and Class II substances, it has a higher ODP than use of Class II substances.
	Hydrocarbon blend A	Unacceptable	Flammability is a serious concern. Data have not been submitted to demonstrate it can be used safely in this end-use.
CFC-12, household refrigerators (retrofit).	HCFC-22/HFC-142b/CFC-12.	Unacceptable	As a blend of both Class I and Class II substances, it has a higher ODP than use of Class II substances.
	Hydrocarbon blend A	Unacceptable	Flammability is a serious concern. Data have not been submitted to demonstrate it can be used safely in this end-use.
CFC-12, household refrigerators (new equipment/NIKs).	HCFC-22/HFC-142b/CFC-12.	Unacceptable	As a blend of both Class I and Class II substances, it has a higher ODP than use of Class II substances.
	Hydrocarbon blend A	Unacceptable	Flammability is a serious concern. Data have not been submitted to demonstrate it can be used safely in this end-use.
CFC-12, R-502 household freezers (retrofit).	HCFC-22/HFC-142b/CFC-12.	Unacceptable	As a blend of both Class I and Class II substances, it has a higher ODP than use of Class II substances.
	Hydrocarbon blend A	Unacceptable	Flammability is a serious concern. Data have not been submitted to demonstrate it can be used safely in this end-use.
CFC-12, 502 household freezers (new equipment/NIKs).	HCFC-22/HFC-142b/CFC-12.	Unacceptable	As a blend of both Class I and Class II substances, it has a higher ODP than use of Class II substances.

REFRIGERANTS—Continued

Unacceptable Substitutes

End-use	Substitute	Decision	Comments
	Hydrocarbon blend A	Unacceptable	Flammability is a serious concern. Data have not been submitted to demonstrate it can be used safely in this end-use.
CFC-12, R-500 residential dehumidifiers (retrofit).	HCFC-22/HFC-142b/CFC-12.	Unacceptable	As a blend of both Class I and Class II substances, it has a higher ODP than use of Class II substances.
	Hydrocarbon blend A	Unacceptable	Flammability is a serious concern. Data have not been submitted to demonstrate it can be used safely in this end-use.
CFC-12, R-500 residential dehumidifiers (new equipment/NIKs).	HCFC-22/HFC-142b/CFC-12.	Unacceptable	As a blend of both Class I and Class II substances, it has a higher ODP than use of Class II substances.
	Hydrocarbon blend A	Unacceptable	Flammability is a serious concern. Data have not been submitted to demonstrate it can be used safely in this end-use.
CFC-12, motor vehicle air conditioners (retrofit).	HCFC-22/HFC-142b/CFC-12.	Unacceptable	As a blend of both Class I and Class II substances, it has a higher ODP than use of Class II substances.
	Hydrocarbon blend A	Unacceptable	Flammability is a serious concern. Data have not been submitted to demonstrate it can be used safely in this end-use.
CFC-12, motor vehicle air conditioners (new equipment/NIKs).	HCFC-22/HFC-142b/CFC-12.	Unacceptable	As a blend of both Class I and Class II substances, it has a higher ODP than use of Class II substances.
	Hydrocarbon blend A	Unacceptable	Flammability is a serious concern. Data have not been submitted to demonstrate it can be sued safely in this end-use.

FOAMS

Unacceptable Substitutes

End-use	Substitute	Decision	Comments
CFC-11 Polyolefin	HCFC-141b (or blends thereof).	Unacceptable	HCFC-141b has an ODP of 0.11, almost equivalent to that of methyl chloroform, a Class I substance. The Agency believes that non-ODP alternatives are sufficiently available to render the use of HCFC-141b unnecessary in polyolefin foams.

SUBSTITUTES ACCEPTABLE SUBJECT TO NARROWED USE LIMITS

End-use	Substitute	Decision	Comments
Electronics cleaning w/ CFC-113, MCF.	Perfluoro-carbons (C5F12, C6F12, C6F14, C7F16, C8F18, C5F11NO, C6F13NO, C7F15NO, and C8F16).	Acceptable for high-performance, precision-engineered applications only where reasonable efforts have been made to ascertain that other alternatives are not technically feasible due to performance or safety requirements.	The principal environmental characteristic of concern for PFCs is that they have long atmospheric lifetimes and high global warming potentials. Although actual contributions to global warming depend upon the quantities of PFCs emitted, the effects are for practical purposes irreversible. Users must observe this limitation on PFC acceptability by conducting a reasonable evaluation of other substitutes to determine that PFC use is necessary to meet performance or safety requirements. Documentation of this evaluation must be kept on file. For additional guidance regarding applications in which PFCs may be appropriate, users should consult the Preamble for this rulemaking.

SUBSTITUTES ACCEPTABLE SUBJECT TO NARROWED USE LIMITS—Continued

End-use	Substitute	Decision	Comments
Precision cleaning w/ CFC-113, MCF.	Perfluoro-carbons (C5F12, C6F12, C6F14, C7F16, C8F18, C5F11NO, C6F13NO, C7F15NO, and C8F16).	Acceptable for high-performance, precision-engineered applications only where reasonable efforts have been made to ascertain that other alternatives are not technically feasible due to performance or safety requirements.	The principal environmental characteristic of concern for PFCs is that they have long atmospheric lifetimes and high global warming potentials. Although actual contributions to global warming depend upon the quantities of PFCs emitted, the effects are for practical purposes irreversible. Users must observe this limitation on PFC acceptability by conducting a reasonable evaluation of other substitutes to determine that PFC use is necessary to meet performance or safety requirements. Documentation of this evaluation must be kept on file. For additional guidance regarding applications in which PFCs may be appropriate, users should consult the Preamble for this rulemaking.

UNACCEPTABLE SUBSTITUTES

End-use	Substitute	Decision	Comments
Metals cleaning w/CFC-113.	HCFC 141b and its blends.	Unacceptable	High ODP; other alternatives exist. Effective date: As of 30 days after final rule for uses in new equipment (including retrofits made after the effective date); as of January 1, 1996, for uses in existing equipment. EPA will grant, if necessary, narrowed use acceptability listings for CFC-113 past the effective date of the prohibition.
Metals cleaning w/MCF ..	HCFC 141b and its blends.	Unacceptable	High ODP; other alternatives exist. Effective date: As of 30 days after final rule for uses in new equipment (including retrofits made after the effective date); as of January 1, 1996, for uses in existing equipment.
Electronics cleaning w/ CFC-113.	HCFC 141b and its blends.	Unacceptable	High ODP; other alternatives exist. Effective date: As of 30 days after final rule for uses in new equipment (including retrofits made after the effective date); as of January 1, 1996, for uses in existing equipment. EPA will grant, if necessary, narrowed use acceptability listings for CFC-113 past the effective date of the prohibition.
Electronics cleaning w/ MCF.	HCFC 141b and its blends.	Unacceptable	High ODP; other alternatives exist. Effective date: As of 30 days after final rule for uses in new equipment (including retrofits made after the effective date); as of January 1, 1996, for uses in existing equipment.
Precision cleaning w/ CFC-113.	HCFC 141b and its blends.	Unacceptable	High ODP; other alternatives exist. Effective date: As of 30 days after final rule for uses in new equipment (including retrofits made after the effective date); as of January 1, 1996, for uses in existing equipment. EPA will grant, if necessary, narrowed use acceptability listings for CFC-113 past the effective date of the prohibition.
Precision cleaning w/ MCF.	HCFC 141b and its blends.	Unacceptable	High ODP; other alternatives exist. Effective date: As of 30 days after final rule for uses in new equipment (including retrofits made after the effective date); as of January 1, 1996, for uses in existing equipment.

FIRE SUPPRESSION AND EXPLOSION PROTECTION STREAMING AGENTS

Substitutes Acceptable Subject to Narrowed Use Limits

End-use	Substitute	Decision	Conditions	Comments
Halon 1211 Streaming Agents.	[CFC Blend]	Acceptable in non-residential uses only.		Use of CFCs are controlled under CAA section 610 which bans use of CFCs in pressurized dispensers, and therefore are not permitted for use in portable fire extinguishers. EPA will list this agent as proposed unacceptable in the next SNAP proposed rulemaking. Because CFCs are a Class I substance, production will be phased out by January 1, 1996. See additional comments 1, 2.
	HBFC–22B1		Acceptable in nonresidential uses only.	Proper procedures regarding the operation of the extinguisher and ventilation following dispensing the extinguishant is recommended. Worker exposure may be a concern in small office areas. HBFC–22B1 is considered an interim substitute for Halon 1211. Because the HBFC–22B1 has an ODP of .74, production will be phased out (except for essential uses) on January 1, 1996. This agent was submitted to the Agency as a Premanufacture Notice (PMN) and is presently subject to requirements contained in a Toxic Substance Control Act (TSCA) Consent Order. See additional comments 1, 2.
	C_6F_{14}	Acceptable for non-residential uses where other alternatives are not technically feasible due to performance or safety requirements:.		Users must observe the limitations on PFC acceptability by making reasonable effort to undertake the following measures: (i) conduct an evaluation of foreseeable conditions of end use; (ii) determine that the physical or chemical properties or other technical constraints of the other available agents preclude their use; and
		a. due to the physical or chemical properties of the agent, or.		(iii) determine that human exposure to the other alternative extinguishing agents may approach or result in cardiosensitization or other unacceptable toxicity effects under normal operating conditions; Documentation of such measures must be available for review upon request.
		b. where human exposure to the extinguishing agent may approach cardiosensitization levels or result in other unacceptable health effects under normal operating conditions.		The principal environmental characteristic of concern for PFCs is that they have high GWPs and long atmospheric lifetimes. Actual contributions to global warming depend upon the quantities of PFCs emitted. For additional guidance regarding applications in which PFCs may be appropriate, users should consult the description of potential uses which is included in the preamble to this rulemaking. See additional comments 1, 2.

Additional Comments:

1—Discharge testing and training should be strictly limited only to that which is essential to meet safety or performance requirements.

2—The agent should be recovered from the fire protection system in conjunction with testing or servicing, and recycled for later use or destroyed.

FIRE SUPPRESSION AND EXPLOSION PROTECTION STREAMING AGENTS

Unacceptable Substitutes

End-use	Substitute	Decision	Comments
Halon 1211 Streaming Agents.	[CFC-11]	Unacceptable	This agent has been suggested for use on large outdoor fires for which non-ozone depleting alternatives are currently used.

[59 FR 13147, Mar. 18, 1994, as amended at 67 FR 4200, Jan. 29, 2002]

APPENDIX B TO SUBPART G OF PART 82—SUBSTITUTES SUBJECT TO USE RESTRICTIONS AND UNACCEPTABLE SUBSTITUTES

REFRIGERANTS—ACCEPTABLE SUBJECT TO USE CONDITIONS

Application	Substitute	Decision	Conditions	Comments
CFC-12 Automobile Motor Vehicle Air Conditioning (Retrofit and New Equipment/NIKS).	HFC-134a, R-401C, HCFC Blend Beta.	Acceptable	—must be used with unique fittings. —must be used with detailed labels. —all CFC-12 must be removed from the system prior to retrofitting. Refer to the text for a full description.	EPA is concerned that the existence of several substitutes in this end-use may increase the likelihood of significant refrigerant cross-contamination and potential failure of both air conditioning systems and recovery/recycling equipment. For the purposes of this rule, no distinction is made between ''retrofit'' and ''drop-in'' refrigerants; retrofitting a car to use a new refrigerant includes all procedures that result in the air conditioning system using a new refrigerant.
CFC–12 Automobile Motor Vehicle Air Conditioning (New equipment only).	R–152a as a substitute for CFC–12.	Acceptable subject to use conditions.	Engineering strategies and/or devices shall be incorporated into the system such that foreseeable leaks into the passenger compartment do not result in R–152a concentrations of 3.7% v/v or above in any part of the free space[1] inside the passenger compartment for more than 15 seconds when the car ignition is on. Manufacturers must adhere to all the safety requirements listed in the Society of Automotive Engineers (SAE) Standard J639, including unique fittings and a flammable refrigerant warning label as well as SAE Standard J2773.	Additional training for service technicians recommended. Manufacturers should conduct and keep on file failure mode and Effect Analysis (FMEA) on the MVAC as stated in SAE J1739.

REFRIGERANTS—ACCEPTABLE SUBJECT TO USE CONDITIONS—Continued

Application	Substitute	Decision	Conditions	Comments
CFC-12 Automobile Motor Vehicle Air Conditioning (New equipment in passenger cars and light-duty trucks only).	HFO-1234yf as a substitute for CFC-12.	Acceptable subject to use conditions.	Manufacturers must adhere to all of the safety requirements listed in the Society of Automotive Engineers (SAE) Standard J639 (adopted 2011), including requirements for: unique fittings, flammable refrigerant warning label, high-pressure compressor cut-off switch and pressure relief devices. For connections with refrigerant containers for use in professional servicing (that is, service for consideration, consistent with subpart B to 40 CFR part 82), use fittings consistent with SAE J2844 (revised October 2011).	Additional training for service technicians recommended. Observe requirements of Significant New Use Rule at 40 CFR 721.10182. HFO-1234yf is also known as 2,3,3,3-tetrafluoro-prop-1-ene (CAS No 754–12–1). Refrigerant containers of HFO-1234yf for use in professional servicing are from 5 lbs (2.3 L) to 50 lbs (23 L) in size. Requirements for handling, storage, and transportation of compressed gases apply to this refrigerant, such as regulations of the Occupational Safety and Health Administration at 29 CFR 1910.101 and the Department of Transportation's requirements at 49 CFR 171–179.
			Manufacturers must conduct Failure Mode and Effect Analysis (FMEA) as provided in SAE J1739 (adopted 2009). Manufacturers must keep the FMEA on file for at least three years from the date of creation.	Requirements for handling, storage, and transportation of compressed gases apply to this refrigerant, such as regulations of the Occupational Safety and Health Administration at 29 CFR 1910.101 and the Department of Transportation's requirements at 49 CFR 171–179.

[1] Free space is defined as the space inside the passenger compartment excluding the space enclosed by the ducting in the HVAC module.

NOTE: The use conditions in this appendix contain references to certain standards from SAE International. The standards are incorporated by reference and the referenced sections are made part of the regulations in part 82:

1. SAE J639. Safety Standards for Motor Vehicle Refrigerant Vapor Compression Systems. Revised February 2011. SAE International.

2. SAE J1739 JAN2009. Potential Failure Mode and Effects Analysis in Design (Design FMEA), Potential Failure Mode and Effects Analysis in Manufacturing and Assembly Processes (Process FMEA). Revised January 2009. SAE International.

3. SAE J2844 OCT2011. R–1234yf (HFO–1234yf) New Refrigerant Purity and Container Requirements for Use in Mobile Air-Conditioning Systems. Revised October 2011. SAE International.

The Director of the Federal Register approves this incorporation by reference in accordance with 5 U.S.C. 552(a) and 1 CFR part 51. You may obtain a copy from SAE Customer Service, 400 Commonwealth Drive, Warrendale, PA 15096–0001 USA; email: *CustomerService@sae.org;* Telephone: 1–877–606–7323 (U.S. and Canada only) or 1–724–776–4970 (outside the U.S. and Canada); Internet address: *http://store.sae.org/dlabout.htm*. You may inspect a copy at U.S. EPA's Air Docket; EPA West Building, Room 3334; 1301 Constitution Ave. NW.; Washington, DC or at the National Archives and Records Administration (NARA). For questions regarding access to these standards, the telephone number of EPA's Air Docket is 202–566–1742. For information on the availability of this material at NARA, call 202–741–6030, or go to: *http://www.archives.gov/federal_register/code_of_federal_regulations/ibr_locations.html*.

REFRIGERANTS—ACCEPTABLE SUBJECT TO NARROWED USE LIMITS

End-use	Substitute	Decision	Comments
CFC-11, CFC-12, CFC-113, CFC-114, CFC-115 Non-Mechanical Heat Transfer, New.	C_3F_8, C_4F_{10}, C_5F_{12}, $C_5F_{11}NO$, C_6F_{14}, $C_6F_{13}NO$, C_7F_{16}, $C_7F_{15}NO$, C_8F_{18}, $C_8F_{16}O$, and $C_9F_{21}N$.	Acceptable only where no other alternatives are technically feasible due to safety or performance requirements.	Users must observe the limitations on PFC acceptability by determining that the physical or chemical properties or other technical constraints of the other available agents preclude their use. Documentation of such measures must be available for review upon request. The principal environmental characteristic of concern for PFCs is that they have high GWPs and long atmospheric lifetimes. EPA strongly recommends recovery and recycling of these substitutes.

REFRIGERANTS—UNACCEPTABLE SUBSTITUTES

End-use	Substitute	Decision	Comments
CFC-11, CFC-12, CFC-113, CFC-114, R-500 Centrifugal Chillers (Retrofit and New Equipment/NIKs).	R-405A	Unacceptable	R-405A contains R-c318, a PFC, which has an extremely high GWP and lifetime. Other substitutes exist which do not contain PFCs.
	Hydrocarbon Blend B	Unacceptable	Flammability is a serious concern. Data have not been submitted to demonstrate it can be used safely in this end-use.
CFC-12 Reciprocating Chillers (Retrofit and New Equipment/NIKs).	R-405A	Unacceptable	R-405A contains R-c318, a PFC, which has an extremely high GWP and lifetime. Other substitutes exist which do not contain PFCs.
	Hydrocarbon Blend B	Unacceptable	Flammability is a serious concern. Data have not been submitted to demonstrate it can be used safely in this end-use.
CFC-11, CFC-12, R-502 Industrial Process Refrigeration (Retrofit and New Equipment/NIKs).	R-403B	Unacceptable	R-403B contains R-218, a PFC, which has an extremely high GWP and lifetime. Other substitutes exist which do not contain PFCs.
	R-405A	Unacceptable	R-405A contains R-c318, a PFC, which has an extremely high GWP and lifetime. Other substitutes exist which do not contain PFCs.
CFC-12, R-502 Ice Skating Rinks (Retrofit and New Equipment/NIKs).	R-405A	Unacceptable	R-405A contains R-c318, a PFC, which has an extremely high GWP and lifetime. Other substitutes exist which do not contain PFCs.
	Hydrocarbon Blend B	Unacceptable	Flammability is a serious concern. Data have not been submitted to demonstrate it can be used safely in this end-use.
CFC-12, R-502 Cold Storage Warehouses (Retrofit and New Equipment/NIKs).	R-403B	Unacceptable	R-403B contains R-218, a PFC, which has an extremely high GWP and lifetime. Other substitutes exist which do not contain PFCs.
	R-405A	Unacceptable	R-405A contains R-c318, a PFC, which has an extremely high GWP and lifetime. Other substitutes exist which do not contain PFCs.
	Hydrocarbon Blend B	Unacceptable	Flammability is a serious concern. Data have not been submitted to demonstrate it can be used safely in this end-use.
CFC-12, R-500, R-502 Refrigerated Transport (Retrofit and New Equipment/NIKs).	R-403B	Unacceptable	R-403B contains R-218, a PFC, which has an extremely high GWP and lifetime. Other substitutes exist which do not contain PFCs.
	R-405A	Unacceptable	R-405A contains R-c318, a PFC, which has an extremely high GWP and lifetime. Other substitutes exist which do not contain PFCs.
	Hydrocarbon Blend B	Unacceptable	Flammability is a serious concern. Data have not been submitted to demonstrate it can be used safely in this end-use.

REFRIGERANTS—UNACCEPTABLE SUBSTITUTES—Continued

End-use	Substitute	Decision	Comments
CFC-12, R-502 Retail Food Refrigeration (Retrofit and New Equipment/NIKs).	R-403B	Unacceptable	R-403B contains R-218, a PFC, which has an extremely high GWP and lifetime. Other substitutes exist which do not contain PFCs.
	R-405A	Unacceptable	R-405A contains R-c318, a PFC, which has an extremely high GWP and lifetime. Other substitutes exist which do not contain PFCs.
	Hydrocarbon Blend B	Unacceptable	Flammability is a serious concern. Data have not been submitted to demonstrate it can be used safely in this end-use.
CFC-12, R-502 Commercial Ice Machines (Retrofit and New Equipment/NIKs).	R-403B	Unacceptable	R-403B contains R-218, a PFC, which has an extremely high GWP and lifetime. Other substitutes exist which do not contain PFCs.
	R-405A	Unacceptable	R-405A contains R-c318, a PFC, which has an extremely high GWP and lifetime. Other substitutes exist which do not contain PFCs.
	Hydrocarbon Blend B	Unacceptable	Flammability is a serious concern. Data have not been submitted to demonstrate it can be used safely in this end-use.
CFC-12 Vending Machines (Retrofit and New Equipment/NIKs).	R-405A	Unacceptable	R-405A contains R-c318, a PFC, which has an extremely high GWP and lifetime. Other substitutes exist which do not contain PFCs.
	Hydrocarbon Blend B	Unacceptable	Flammability is a serious concern. Data have not been submitted to demonstrate it can be used safely in this end-use.
CFC-12 Water Coolers (Retrofit and New Equipment/NIKs).	R-405A	Unacceptable	R-405A contains R-c318, a PFC, which has an extremely high GWP and lifetime. Other substitutes exist which do not contain PFCs.
	Hydrocarbon Blend B	Unacceptable	Flammability is a serious concern. Data have not been submitted to demonstrate it can be used safely in this end-use.
CFC-12 Household Refrigerators (Retrofit and New Equipment/NIKs).	R-405A	Unacceptable	R-405A contains R-c318, a PFC, which has an extremely high GWP and lifetime. Other substitutes exist which do not contain PFCs.
	Hydrocarbon Blend B	Unacceptable	Flammability is a serious concern. Data have not been submitted to demonstrate it can be used safely in this end-use.
CFC-12, R-502 Household Freezers (Retrofit and New Equipment/NIKs).	R-403B	Unacceptable	R-403B contains R-218, a PFC, which has an extremely high GWP and lifetime. Other substitutes exist which do not contain PFCs.
	R-405A	Unacceptable	R-405A contains R-c318, a PFC, which has an extremely high GWP and lifetime. Other substitutes exist which do not contain PFCs.
	Hydrocarbon Blend B	Unacceptable	Flammability is a serious concern. Data have not been submitted to demonstrate it can be used safely in this end-use.
CFC-12, R-500 Residential Dehumidifiers (Retrofit and New Equipment/NIKs).	R-405A	Unacceptable	R-405A contains R-c318, a PFC, which has an extremely high GWP and lifetime. Other substitutes exist which do not contain PFCs.
	Hydrocarbon Blend B	Unacceptable	Flammability is a serious concern. Data have not been submitted to demonstrate it can be used safely in this end-use.
CFC–12 Motor Vehicle Air Conditioners (Retrofit and New Equipment/NIKs).	R–405A	Unacceptable	R–405A contains R–c318, a PFC, which has an extremely high GWP and lifetime. Other Substitutes exist which do not contain PFCs.
	Hydrocarbon Blend B	Unacceptable	Flammability is a serious concern. Data have not been submitted to demonstrate it can be used safely in this end-use.

REFRIGERANTS—UNACCEPTABLE SUBSTITUTES—Continued

End-use	Substitute	Decision	Comments
	Flammable Substitutes, other than R–152a or HFO–1234yf in new equipment.	Unacceptable	The risks associated with using flammable substitutes (except R–152a and HFO–1234yf) in this end-use have not been addressed by a risk assessment. R–152a and HFO–1234yf may be used in new equipment with the use conditions in appendix B to this subpart.

SOLVENT CLEANING SECTOR—ACCEPTABLE SUBJECT TO USE CONDITIONS SUBSTITUTES

Application	Substitute	Decision	Conditions	Comments
Electronics Cleaning w/CFC-113, MCF.	HCFC-225 ca/cb	Acceptable	Subject to the company set exposure limit of 25 ppm of the -ca isomer.	HCFC-225 ca/cb blend is offered as a 45%-ca/55%-cb blend. The company set exposure limit of the -ca isomer is 25 ppm. The company set exposure limit of the -cb isomer is 250 ppm. It is the Agency's opinion that with the low emission cold cleaning and vapor degreasing equipment designed for this use, the 25 ppm limit of the HCFC-225 ca isomer can be met. The company is submitting further exposure monitoring data.
Precision Cleaning w/CFC-113, MCF.	HCFC-225 ca/cb	Acceptable	Subject to the company set exposure limit of 25 ppm of the -ca isomer.	HCFC-225 ca/cb blend is offered as a 45%-ca/55%-cb blend. The company set exposure limit of the -ca isomer is 25 ppm. The company set exposure limit of the -cb isomer is 250 ppm. It is the Agency's opinion that with the low emission cold cleaning and vapor degreasing equipment designed for this use, the 25 ppm limit of the HCFC-225 ca isomer can be met. The company is submitting further exposure monitoring data.

SOLVENT CLEANING SECTOR—UNACCEPTABLE SUBSTITUTES

End use	Substitute	Decision	Comments
Metals cleaning w/CFC-113 ..	Dibromomethane	Unacceptable	High ODP; other alternatives exist.
Metals cleaning w/MCF	Dibromomethane	Unacceptable	High ODP; other alternatives exist.
Electronics cleaning w/CFC-113.	Dibromomethane	Unacceptable	High ODP; other alternatives exist.
Electronics cleaning w/MCF ..	Dibromomethane	Unacceptable	High ODP; other alternatives exist.
Precision cleaning w/CFC-113.	Dibromomethane	Unacceptable	High ODP; other alternatives exist.
Precision cleaning w/MCF	Dibromomethane	Unacceptable	High ODP; other alternatives exist.

FIRE SUPPRESSION AND EXPLOSION PROTECTION—ACCEPTABLE SUBJECT TO USE CONDITIONS: TOTAL FLOODING AGENTS

Application	Substitute	Decision	Conditions	Comments
Halon 1301 Total Flooding Agents.	Inert Gas/Powdered Aerosol Blend.	Acceptable as a Halon 1301 substitute in normally unoccupied areas.	In areas where personnel could possibly be present, as in a cargo area, EPA requires that the employer shall provide a pre-discharge employee alarm capable of being perceived above ambient light or noise levels for alerting employees before system discharge. The pre-discharge alarm shall provide employees time to safely exit the discharge area prior to system discharge.	The manufacturer's SNAP application requested listing for use in unoccupied areas only. See additional comment 2.

Additional Comments

1—Must conform with OSHA 29 CFR 1910 Subpart L Section 1910.160 of the U.S. Code. You should use clean agents in accordance with the safety guidelines in the latest edition of the NFPA 2001 Standard for Clean Agent Fire Extinguishing Systems.

2—Per OSHA requirements, protective gear (SCBA) must be available in the event personnel must enter/reenter the area.

3—Discharge testing should be strictly limited only to that which is essential to meet safety or performance requirements.

4—The agent should be recovered from the fire protection system in conjunction with testing or servicing, and recycled for later use or destroyed.

FIRE SUPPRESSION AND EXPLOSION PROTECTION—ACCEPTABLE SUBJECT TO NARROWED USE LIMITS: TOTAL FLOODING AGENTS

End-use	Substitute	Decision	Conditions	Further information
Total flooding ...	Sulfurhexafluoride (SF_6).	Acceptable subject to narrowed use in limits.	May be used as a discharge test agent in military uses and in civilian aircraft uses only.	This agent has an atmospheric lifetime greater than 1,000 years, with an estimated 100-year, 500-year, and 1,000-year GWP of 16,100, 26,110 and 32,803 respectively. Users should limit testing only to that which is essential to meet safety or performance requirements. This agent is only used to test new Halon 1301 systems. See additional comments 1, 2, 3, 4, 5.
Total flooding ...	CF_3I	Acceptable subject to narrowed use limits.	Use only in normally unoccupied areas.	Use of this agent should be in accordance with the safety guidelines in the latest edition of the NFPA 2001 Standard for Clean Agent Fire Extinguishing Systems. Manufacturer has not applied for listing for use in normally occupied areas. Preliminary cardiosensitization data indicates that this agent would not be suitable for use in normally occupied areas. See additional comments 1, 2, 3, 4, 5.

Additional comments:

1—Must conform with relevant OSHA requirements, including 29 CFR 1910, Subpart L, Sections 1910.160 and 1910.162.

2—Per OSHA requirements, protective gear (SCBA) should be available in the event personnel should reenter the area.

3—Discharge testing should be strictly limited to that which is essential to meet safety or performance requirements.

4—The agent should be recovered from the fire protection system in conjunction with testing or servicing, and recycled for later use or destroyed.

5—EPA has no intention of duplicating or displacing OSHA coverage related to the use of personal protective equipment (e.g., respiratory protection), fire protection, hazard communication, worker training or any other occupational safety and health standard with respect to halon substitutes.

FIRE SUPPRESSION AND EXPLOSION PROTECTION—UNACCEPTABLE SUBSTITUTES

Application	Substitute	Decision	Comments
Halon 1301 Total Flooding Agents.	HFC-32	Unacceptable	Data indicate that HFC-32 is flammable and therefore is not suitable as a halon substitute.

[60 FR 31103, June 13, 1995, as amended at 67 FR 4200, Jan. 29, 2002; 73 FR 33310, June 12, 2008; 76 FR 17519, Mar. 29, 2011; 77 FR 17350, Mar. 26, 2012]

EFFECTIVE DATE NOTE: At 77 FR 33330, June 6, 2012, appendix B to subpart G of part 82 was amended by adding an entry to the end of the table for ''Refrigerants-Acceptable Subject to Use Conditions,'' and by revising footnotes 1, 2, and 3, effective Aug. 6, 2012. For the convenience of the user, the added and revised text is set forth as follows:

APPENDIX B TO SUBPART G OF PART 82—SUBSTITUTES SUBJECT TO USE RESTRICTIONS AND UNACCEPTABLE SUBSTITUTES

REFRIGERANTS-ACCEPTABLE SUBJECT TO USE CONDITIONS

Application	Substitute	Decision	Conditions	Comments
*	*	*	* *	* *
CFC–12 Motor Vehicle Air Conditioning (New equipment only).	Carbon dioxide (CO_2) as a substitute for CFC–12.	Acceptable subject to use conditions.	Engineering strategies and/or mitigation devices shall be incorporated such that in the event of refrigerant leaks, the resulting CO_2 concentrations do not exceed:	Additional training for service technicians is recommended.
			The short term exposure level (STEL) of 3% or 30,000 ppm averaged over 15 minutes in the passenger free space [1]; and; The ceiling limit of 4% or 40,000 ppm in the passenger breathing zone.[2]	In designing risk mitigation strategies and/or devices, manufacturers should factor in background CO_2 concentrations in the passenger cabin potentially contributed from normal respiration by the maximum number of vehicle occupants.
			Vehicle manufacturers must keep records of the tests performed for a minimum period of three years demonstrating that CO_2 refrigerant levels do not exceed the STEL of 3% averaged over 15 minutes in the passenger free space, and the ceiling limit of 4% in the breathing zone.	Use of the standards SAE J1052, SAE J2772, and SAE J2773 is recommended as additional reference.
			The use of CO_2 in MVAC systems must adhere to the standard conditions identified in SAE Standard J639 (2011 version) including: Installation of a high pressure system warning label; Installation of a compressor cut-off switch; and Use of unique fittings with: Outside diameter of 16.6 +0/−0.2 mm (0.6535 +0/−0.0078 inches) for the MVAC low-side; Outside diameter of 18.1 +0/−0.2 mm (0.7126 +0/−0.0078 inches) for the MVAC high-side; and Outside diameter of 20.955 +0/−0.127 mm (0.825 +0/−0.005 inches) and right-hand thread direction for CO_2 refrigerant service containers.[3]	Manufacturers should conduct and keep on file Potential Failure Mode and Effects Analysis in Design [Design FMEA], Potential Failure Mode and Effect Analysis in Manufacturing and Assembly Process [Process FMEA] on the MVAC as stated in SAE J1739.

[1] Free space is defined as the space inside the passenger compartment excluding the space enclosed by the ducting in the HVAC module.

[2] Area inside the passenger compartment where the driver's and passengers' heads are located during a normal sitting position. Refer to SAE J1052 for information on determining passenger head position.

[3] The refrigerant service containers fitting requirement applies only to refrigerant service containers used during servicing of the MVAC, in accordance with the provisions established for MVAC servicing under 40 CFR part 82, subpart B.

* * * * *

APPENDIX C TO SUBPART G OF PART 82—SUBSTITUTES SUBJECT TO USE RESTRICTIONS AND UNACCEPTABLE SUBSTITUTES LISTED IN THE MAY 22, 1996 FINAL RULE, EFFECTIVE JUNE 21, 1996

REFRIGERATION AND AIR CONDITIONING SECTOR—ACCEPTABLE SUBJECT TO USE CONDITIONS

HCFC Blend Delta and Blend Zeta are acceptable subject to the following conditions when used to retrofit a CFC-12 motor vehicle air conditioning system:

1. Each refrigerant may only be used with a set of fittings that is unique to that refrigerant. These fittings (male or female, as appropriate) must be used with all containers of the refrigerant, on can taps, on recovery, recycling, and charging equipment, and on all air conditioning system service ports. These fittings must be designed to mechanically prevent cross-charging with another refrigerant. A refrigerant may only be used with the fittings and can taps specifically intended for that refrigerant. Using an adapter or deliberately modifying a fitting to use a different refrigerant will be a violation of this use condition. In addition, fittings shall meet the following criteria, derived from Society of Automotive Engineers (SAE) standards and recommended practices:

a. When existing CFC-12 service ports are to be retrofitted, conversion assemblies shall attach to the CFC-12 fitting with a thread lock adhesive and/or a separate mechanical latching mechanism in a manner that permanently prevents the assembly from being removed.

b. All conversion assemblies and new service ports must satisfy the vibration testing requirements of sections 3.2.1 or 3.2.2 of SAE J1660, as applicable, excluding references to SAE J639 and SAE J2064, which are specific to HFC-134a.

c. In order to prevent discharge of refrigerant to the atmosphere, systems shall have a device to limit compressor operation before the pressure relief device will vent refrigerant. This requirement is waived for systems that do not feature such a pressure relief device.

d. All CFC-12 service ports not retrofitted with conversion assemblies shall be rendered permanently incompatible for use with CFC-12 related service equipment by fitting with a device attached with a thread lock adhesive and/or a separate mechanical latching mechanism in a manner that prevents the device from being removed.

2. When a retrofit is performed, a label must be used as follows:

a. The person conducting the retrofit must apply a label to the air conditioning system in the engine compartment that contains the following information:

i. The name and address of the technician and the company performing the retrofit.

ii. The date of the retrofit.

iii. The trade name, charge amount, and, when applicable, the ASHRAE refrigerant numerical designation of the refrigerant.

iv. The type, manufacturer, and amount of lubricant used.

v. If the refrigerant is or contains an ozone-depleting substance, the phrase ''ozone depleter.''

vi. If the refrigerant displays flammability limits as measured according to ASTM E681, the statement ''This refrigerant is FLAMMABLE. Take appropriate precautions.''

b. This label must be large enough to be easily read and must be permanent.

c. The background color must be unique to the refrigerant.

d. The label must be affixed to the system over information related to the previous refrigerant, in a location not normally replaced during vehicle repair.

e. Information on the previous refrigerant that cannot be covered by the new label must be permanently rendered unreadable.

3. No substitute refrigerant may be used to ''top-off'' a system that uses another refrigerant. The original refrigerant must be recovered in accordance with regulations issued under section 609 of the CAA prior to charging with a substitute.

SOLVENT CLEANING SECTOR—PROPOSED ACCEPTABLE SUBJECT TO USE CONDITIONS SUBSTITUTES

Application	Substitute	Decision	Conditions	Comments
Metals Cleaning with CFC-113, MCF and HCFC-141b.	Monochlorotoluenes and benzotrifluorides.	Acceptable	Subject to a 50 ppm workplace standard for monochlorotoluenes and a 25 ppm standard for benzotrifluorides.	The workplace standard for monochlorotoluenes is based on an OSHA PEL of 50 ppm for orthochlorotoluene. The workplace standard for benzotrifluorides is based on a recent toxicology study.

SOLVENT CLEANING SECTOR—PROPOSED ACCEPTABLE SUBJECT TO USE CONDITIONS SUBSTITUTES—Continued

Application	Substitute	Decision	Conditions	Comments
Electronics Cleaning w/ CFC-113, MCF and HCFC-141b.	Monochlorotoluenes and benzotrifluorides.	Acceptable	Subject to a 50 ppm workplace standard for monochlorotoluenes and a 25 ppm standard for benzotrifluorides.	The workplace standard for monochlorotoluenes is based on an OSHA PEL of 50 ppm for orthochlorotoluene. The workplace standard for benzotrifluorides is based on a recent toxicology study.
Precision Cleaning w/ CFC-113, MCF and HCFC-141b.	Monochlorotoluenes and benzotrifluorides.	Acceptable	Subject to a 50 ppm workplace standard for monochlorotoluenes and a 25 ppm standard for benzotrifluorides.	The workplace standard for monochlorotoluenes is based on an OSHA PEL of 50 ppm for orthochlorotoluene. The workplace standard for benzotrifluorides is based on a recent toxicology study.

ACCEPTABLE SUBJECT TO NARROWED USE LIMITS: STREAMING AGENTS

Application	Substitute	Decision	Comments
Halon 1211 ..... Streaming Agents	CF_3I	Acceptable in non-residential uses only.	

AEROSOLS—PROPOSED ACCEPTABLE SUBJECT TO USE CONDITIONS SUBSTITUTES

Application	Substitute	Decision	Conditions	Comments
CFC-113, MCF and HCFC-141b as solvent.	Monochlorotoluenes and benzotrifluo-rides.	Acceptable	Subject to a 50 ppm workplace standard for monochlorotoluenes and a 25 ppm standard for benzotrifluorides.	The workplace standard for monochlorotoluenes is based on an OSHA PEL of 50 ppm for orthochlorotoluene. The workplace standard for benzotrifluorides is based on a recent toxicology study.

ADHESIVES, COATINGS AND INKS—PROPOSED ACCEPTABLE SUBJECT TO USE CONDITIONS SUBSTITUTES

Application	Substitute	Decision	Conditions	Comments
CFC-113, MCF and HCFC-141b.	Monochlorotoluenes and benzotrifluo-rides.	Acceptable	Subject to a 50 ppm workplace standard for monochlorotoluenes and a 25 ppm standard for benzotrifluorides.	The workplace standard for monochlorotoluenes is based on an OSHA PEL of 50 ppm for orthochlorotoluene. The workplace standard for benzotrifluorides is based on a recent toxicology study.

[61 FR 25592, May 22, 1996, as amended at 67 FR 4201, Jan. 29, 2002]

EFFECTIVE DATE NOTE: At 61 FR 25592, May 22, 1996, Appendix C to Part 82 Subpart G was added. This appendix contains information collection and recordkeeping requirements which will not become effective until approval has been given by the Office of Management and Budget.

APPENDIX D TO SUBPART G OF PART 82—SUBSTITUTES SUBJECT TO USE RESTRICTIONS AND UNACCEPTABLE SUBSTITUTES

Summary of Decisions

Refrigeration and Air Conditioning Sector
Acceptable Subject to Use Conditions

R-406A/''GHG''/''McCool'', ''GHG-HP'', ''GHG-X4''/''Autofrost''/''Chill-It'', and ''Hot Shot''/''Kar Kool'' are acceptable substitutes for CFC-12 in retrofitted motor vehicle air conditioning systems (MVACs) subject to the use condition that a retrofit to these refrigerants must include replacing non-barrier hoses with barrier hoses.

For all refrigerants submitted for use in motor vehicle air conditioning systems, subsequent to the effective date of this FRM, in addition to the information previously required in the March 18, 1994 final SNAP rule (58 FR 13044), SNAP submissions must include specifications for the fittings similar to those found in SAE J639, samples of all fittings, and the detailed label described below at the same time as the initial SNAP submission, or the submission will be considered incomplete. Under section 612 of the Clean Air Act, substitutes for which submissions are incomplete may not be sold or used, regardless of other acceptability determinations, and the prohibition against sale of a new refrigerant will not end until 90 days after EPA determines the submission is complete.

In addition, the use of a) R-406A/''GHG''/''McCool'', ''GHG-HP'', ''GHG-X4/''Autofrost''/''Chill-It'', ''Hot Shot''/''Kar Kool'', and ''FREEZE 12'' as CFC-12 substitutes in MVACs, and b) all refrigerants submitted for, and listed in, subsequent Notices of Acceptability as substitutes for CFC-12 in MVACs, must meet the following conditions:

1. Each refrigerant may only be used with a set of fittings that is unique to that refrigerant. These fittings (male or female, as appropriate) must be designed by the manufacturer of the refrigerant. The manufacturer is responsible to ensure that the fittings meet all of the requirements listed below, including testing according to SAE standards. These fittings must be designed to mechanically prevent cross-charging with another refrigerant, including CFC-12.

The fittings must be used on all containers of the refrigerant, on can taps, on recovery, recycling, and charging equipment, and on all air conditioning system service ports. A refrigerant may only be used with the fittings and can taps specifically intended for that refrigerant and designed by the manufacturer of the refrigerant. Using a refrigerant with a fitting designed by anyone else, even if it is different from fittings used with other refrigerants, is a violation of this use condition. Using an adapter or deliberately modifying a fitting to use a different refrigerant is a violation of this use condition.

Fittings shall meet the following criteria, derived from Society of Automotive Engineers (SAE) standards and recommended practices:

a. When existing CFC-12 service ports are retrofitted, conversion assemblies shall attach to the CFC-12 fitting with a thread lock adhesive and/or a separate mechanical latching mechanism in a manner that permanently prevents the assembly from being removed.

b. All conversion assemblies and new service ports must satisfy the vibration testing requirements of section 3.2.1 or 3.2.2 of SAE J1660, as applicable, excluding references to SAE J639 and SAE J2064, which are specific to HFC-134a.

c. In order to prevent discharge of refrigerant to the atmosphere, systems shall have a device to limit compressor operation before the pressure relief device will vent refrigerant.

d. All CFC-12 service ports not retrofitted with conversion assemblies shall be rendered permanently incompatible for use with CFC-12 related service equipment by fitting with a device attached with a thread lock adhesive and/or a separate mechanical latching mechanism in a manner that prevents the device from being removed.

2. When a retrofit is performed, a label must be used as follows:

a. The person conducting the retrofit must apply a label to the air conditioning system in the engine compartment that contains the following information:

i. The name and address of the technician and the company performing the retrofit.

ii. The date of the retrofit.

iii. The trade name, charge amount, and, when applicable, the ASHRAE refrigerant numerical designation of the refrigerant.

iv. The type, manufacturer, and amount of lubricant used.

v. If the refrigerant is or contains an ozone-depleting substance, the phrase ''ozone depleter''.

vi. If the refrigerant displays flammability limits as measured according to ASTM E681, the statement ''This refrigerant is FLAMMABLE. Take appropriate precautions.''

b. The label must be large enough to be easily read and must be permanent.

c. The background color must be unique to the refrigerant.

d. The label must be affixed to the system over information related to the previous refrigerant, in a location not normally replaced during vehicle repair.

e. In accordance with SAE J639, testing of labels must meet ANSI/UL 969–1991.

f. Information on the previous refrigerant that cannot be covered by the new label must be rendered permanently unreadable.

3. No substitute refrigerant may be used to ''top-off'' a system that uses another refrigerant. The original refrigerant must be recovered in accordance with regulations issued under section 609 of the CAA prior to charging with a substitute.

SOLVENT CLEANING SECTOR

[Acceptable Subject to Use Conditions Substitutes]

Application	Substitute	Decision	Conditions	Comments
Electronics Cleaning w/CFC-113 and MCF.	HFC-4310mee	Acceptable	Subject to a 200 ppm time-weighted average workplace exposure standard and a 400 ppm workplace exposure ceiling.	
Precision Cleaning w/CFC-113 and MCF.	HFC-4310mee	Acceptable	Subject to a 200 ppm time-weighted average workplace exposure standard and a 400 ppm workplace exposure ceiling.	

SOLVENT SECTOR

[Acceptable Subject to Narrowed Use Limits]

Application	Substitute	Decision	Comments
Electronics Cleaning w/CFC-113 and MCF	Perfluoropolyethers	Perfluoropolyethers are acceptable substitutes for CFC-113 and MCF in the precision cleaning sector for high performance, precision-engineered applications only where reasonable efforts have been made to ascertain that other alternatives are not technically feasible due to performance or safety requirements.	PFPEs have similar global warming profile to the PFCs, and the SNAP decision on PFPEs parallels that for PFCs.
Precision Cleaning w/CFC-113 and MCF	Perfluoropolyethers	Perfluoropolyethers are acceptable substitutes for CFC-113 and MCF in the precision cleaning sector for high performance, precision-engineered applications only where reasonable efforts have been made to ascertain that other alternatives are not technically feasible due to performance or safety requirements.	PFPEs have similar global warming profile to the PFCs, and the SNAP decision on PFPEs parallels that for PFCs.

Unacceptable Substitutes

End-use	Substitute	Decision	Comments
Electronics Cleaning w/CFC-113 and MCF	HCFC-141b	Extension of existing unacceptability determination to grant existing uses in high-performance electronics permission to continue until January 1, 1997.	This determination extends the use date for HCFC-141b in solvent cleaning, but only for existing users in high-performance electronics and only for one year.
Precision Cleaning w/CFC-113 and MCF	HCFC-141b	Extension of existing unacceptability determination to grant existing uses in precision cleaning permission to continue until January 1, 1997.	This determination extends the use date for HCFC-141b in solvent cleaning, but only for existing users in precision cleaning and only for one year.

AEROSOLS SECTOR

Acceptable Subject to Narrowed Use Limits

Application	Substitute	Decision	Comments
CFC-113, MCF, and HCFC-141b as aerosol solvents.	Perfluorocarbons	Perfluorocarbons are acceptable substitutes for aerosol applications only where reasonable efforts have been made to ascertain that other alternatives are not technically feasible due to performance or safety requirements.	PFCs have extremely long atmospheric lifetimes and high Global Warming Potentials. This decision reflects these concerns and is patterned after the SNAP decision on PFCs in the solvent cleaning sector.
	Perfluoropolyethers	Perfluorocarbons are acceptable substitutes for aerosol applications only where reasonable efforts have been made to ascertain that other alternatives are not technically feasible due to performance or safety requirements.	PFPEs have similar global warming profile to the PFCs, and the SNAP decision on PFPEs parallels that for PFCs in the solvent cleaning sector.

Unacceptable Substitutes

End-use	Substitute	Decision	Comments
CFC-11, CFC-12, HCFC-22, and HCFC-142b as aerosol propellants.	SF6	Unacceptable	SF6 has the highest GWP of all industrial gases, and other compressed gases meet user needs in this application equally well.

[61 FR 54040, Oct. 16, 1996]

APPENDIX E TO SUBPART G OF PART 82—UNACCEPTABLE SUBSTITUTES LISTED IN THE JANUARY 26, 1999 FINAL RULE, EFFECTIVE JANUARY 26, 1999

REFRIGERATION AND AIR-CONDITIONING SECTOR UNACCEPTABLE SUBSTITUTES

End-use	Substitute	Decision	Comments
All refrigeration and air-conditioning end uses	MT–31	Unacceptable	Chemical contained in this blend presents unacceptable toxicity risk.

[64 FR 3865, Jan. 26, 1999]

APPENDIX F TO SUBPART G OF PART 82—UNACCEPTABLE SUBSTITUTES LISTED IN THE JANUARY 26, 1999 FINAL RULE, EFFECTIVE JANUARY 26, 1999

REFRIGERATION AND AIR-CONDITIONING SECTOR UNACCEPTABLE SUBSTITUTES

End-use	Substitute	Decision	Comments
All refrigeration and air-conditioning end uses.	Hexafluoropropylene (HFP) and all HFP-containing blends.	Unacceptable	Presents unacceptable toxicity risk.

[64 FR 3868, Jan. 26, 1999]

APPENDIX G TO SUBPART G OF PART 82—SUBSTITUTES SUBJECT TO USE RESTRICTIONS AND UNACCEPTABLE SUBSTITUTES LISTED IN THE MARCH 3, 1999, FINAL RULE, EFFECTIVE APRIL 2, 1999.

REFRIGERANTS UNACCEPTABLE SUBSTITUTES

End-use	Substitute	Decision	Comments
CFC-12, R-502, and HCFC-22 Household Refrigeration, Transport Refrigeration, Vending Machines, Cold Storage Warehouses, and Retail Food Refrigeration, Retrofit and New.	Self-Chilling Cans-Using HFC-134a or HFC-152a.	Unacceptable	Unacceptably high greenhouse gas emissions from direct release of refrigerant to the atmosphere.

[64 FR 10378, Mar. 3, 1999]

APPENDIX H TO SUBPART G OF PART 82—SUBSTITUTES SUBJECT TO USE RESTRICTIONS AND UNACCEPTABLE SUBSTITUTES, EFFECTIVE MAY 28, 1999

CFC-12 Automobile and Non-automobile Motor Vehicle Air Conditioners, Retrofit and New

Criteria for Uniqueness of Fittings

(a) All fittings for alternative motor vehicle refrigerants must meet the following requirements:

(1) High-side screw-on fittings for each refrigerant must differ from high-side screw-on fittings for all other refrigerants, including CFC-12, and from low-side screw-on fittings for CFC-12;

(2) Low-side screw-on fittings for each refrigerant must differ from low-side screw-on fittings for all other refrigerants, including CFC-12;

(3) High-side screw-on fittings for a given refrigerant must differ from low-side screw-on fittings for that refrigerant, to protect against connecting a low-pressure system to a high-pressure one;

(4) High-side quick-connect fittings for each refrigerant must differ from high-side quick-connect fittings for all other refrigerants, including CFC-12 (if they exist);

(5) Low-side quick-connect fittings for each refrigerant must differ from low-side quick-connect fittings for all other refrigerants, including CFC-12 (if they exist);

(6) High-side quick-connect fittings for a given refrigerant must differ from low-side quick-connect fittings for that refrigerant, to protect against connecting a low-pressure system to a high-pressure one;

(7) For each type of container, the fitting for each refrigerant must differ from the fitting for that type of container for all other refrigerants, including CFC-12.

(b) For screw-on fittings, ''differ'' means that either the diameter must differ by at least 1/16 inch or the thread direction must be reversed (i.e. right-handed vs. left-handed). Simply changing the thread pitch is not sufficient. For quick-connect fittings, ''differ''

means that a person using normal force and normal tools (including wrenches) must not be able to cross-connect fittings.

(c) The sole exception to the 1/16 inch difference requirement is the difference between the small can fittings for GHG-X4 and R-406A. The GHG-X4 small can fitting uses a metric measurement, and is slightly less than 1/16 inch larger than the small can fitting for R-406A. EPA has concluded that these fittings will not cross-connect, and therefore they may be used.

REFRIGERATION AND AIR CONDITIONING—UNACCEPTABLE SUBSTITUTES

End-use	Substitute	Decision	Comments
All HCFC-22 end-uses, retrofit and new.	NARM–22	Unacceptable	This blend contains HCFC-22, and it is inappropriate to use such a blend as a substitute for HCFC-22. In addition, this blend contains HFC-23, which has an extremely high GWP and lifetime. Other substitutes for HCFC-22 exist that do not contain either HCFC-22 or HFC-23.

SOLVENTS CLEANING—UNACCEPTABLE SUBSTITUTES

End-use	Substitute	Decision	Comments
Metals, Electronic, and Precision cleaning with CFC-113, methyl chloroform, and HCFC-141b.	Chlorobromomethane.	Unacceptable	Other alternatives exist with zero or much lower ODP.

FIRE SUPPRESSION AND EXPLOSION PROTECTION—ACCEPTABLE SUBJECT TO NARROWED USE LIMITS: TOTAL FLOODING AGENTS

End-use	Substitute	Decision	Conditions	Further information
Total flooding	HFC-236fa	Acceptable subject to narrowed use limits.	Acceptable when manufactured using any process that does not convert perfluoroisobutylene (PFIB) directly to HFC-236fa in a single step: for use in explosion suppression and explosion inertion applications, and for use in fire suppression applications where other non-PFC agents or alternatives are not technically feasible due to performance or safety requirements: (a) because of their physical or chemical properties, or (b) where human exposure to the extinguishing agents may result in failure to meet safety guidelines in the latest edition of the NFPA 2001 Standard for Clean Agent Fire Extinguishing Systems.	Use of this agent should be in accordance with the safety guidelines in the latest edition of the NFPA 2001 Standard for Clean Agent Fire Systems. Users should observe the limitations on HFC-236fa acceptability by taking the following measures: (i) conduct an evaluation of foreseeable conditions of end-use; (ii) determine that the physical or chemical properties, or other technical constraints of the other available agents preclude their use; and (iii) determine that human exposure to the other alternative extinguishing agents may result in failure to meet safety guidelines in the latest edition of the NFPA 2001 Standard for Clean Agent Fire Extinguishing Systems. Documentation of such measures should be available for review upon request. The principal environmental characteristic of concern for HFC-236fa is its high GWP of 9400 and long atmospheric lifetime of 226 years. Actual contributions to global warming depend upon the quantities emitted. See additional comments 1, 2, 3, 4, 5.

FIRE SUPPRESSION AND EXPLOSION PROTECTION—ACCEPTABLE SUBJECT TO NARROWED USE LIMITS: TOTAL FLOODING AGENTS—Continued

End-use	Substitute	Decision	Conditions	Further information
Total flooding	C_3F_8	Acceptable subject to narrowed use limits.	Acceptable for nonresidential uses where other alternatives are not technically feasible due to performance or safety requirements: (a) because of their physical or chemical properties, or (b) where human exposure to the extinguishing agents may result in failure to meet safety guidelines in the latest edition of the NFPA 2001 Standard for Clean Agent Fire Extinguishing Systems.	Use of this agent should be in accordance with the safety guidelines in the latest edition of the NFPA 2001 Standard for Clean Agent Fire Extinguishing Systems. Users should observe the limitations on PFC acceptability by taking the following measures: (i) conduct an evaluation of foreseeable conditions of end-use; (ii) determine that the physical or chemical properties or other technical constraints of the other available agents preclude their use; and (iii) determine that human exposure to the other alternative extinguishing agents may result in failure to meet safety guidelines in the latest edition of the NFPA 2001 Standard for Clean Agent Fire Extinguishing Systems. Documentation of such measures should be available for review upon request. The principal environmental characteristic of concern for PFCs is that they have high GWPs and long atmospheric lifetimes. Actual contributions to global warming depend upon the quantities of PFCs emitted. See additional comments 1, 2, 3, 4, 5.
Total flooding	C_4F_{10}	Acceptable subject to narrowed use limits	Acceptable for nonresidential uses where other alternatives are not technically feasible due to performance or safety requirements: (a) because of their physical or chemical properties, or (b) where human exposure to the extinguishing agents may result in failure to meet safety guidelinesin the latest edition of the NFPA 2001 Standard for Clean Agent Fire Extinguishing Systems	Use of this agent should be in accordance with the safety guidelines in the latest edition of the NFPA 2001 Standard for Clean Agent Fire Extinguishing Systems. Users should observe the limitations on PFC acceptability by taking the following measures: (i) conduct an evaluation of foreseeable conditions of end-use; (ii) determine that the physical or chemical properties or other technical constraints of the other available agents preclude their use; and

FIRE SUPPRESSION AND EXPLOSION PROTECTION—ACCEPTABLE SUBJECT TO NARROWED USE LIMITS: TOTAL FLOODING AGENTS—Continued

End-use	Substitute	Decision	Conditions	Further information
				(iii) determine that human exposure to the other alternative extinguishing agents may result in failure to meet safety guidelines in the latest edition of the NFPA 2001 Standard for Clean Agent Fire Extinguishing Systems Documentation of such measures should be available for review upon request. The principal environmental characteristic of concern for PFCs is that they have high GWPs and long atmospheric lifetimes. Actual contributions to global warming depend upon the quantities of PFCs emitted. See additional comments 1, 2, 3, 4, 5.

Additional comments:

1—Should conform with relevant OSHA requirements, including 29 CFR 1910, Subpart L, Sections 1910.160 and 1910.162.

2—Per OSHA requirements, protective gear (SCBA) should be available in the event personnel should reenter the area.

3—Discharge testing should be strictly limited to that which is essential to meet safety or performance requirements.

4—The agent should be recovered from the fire protection system in conjunction with testing or servicing, and recycled for later use or destroyed.

5—EPA has no intention of duplicating or displacing OSHA coverage related to the use of personal protective equipment (e.g., respiratory protection), fire protection, hazard communication, worker training or any other occupational safety and health standard with respect to halon substitutes.

FIRE SUPPRESSION AND EXPLOSION PROTECTION—STREAMING AGENTS—ACCEPTABLE SUBJECT TO NARROWED USE LIMITS

End-use	Substitute	Decision	Conditions	Comments
Halon 1211 ..... replacement	C6F14	Acceptable for nonresidential uses where other alternatives are not technically feasible due to performance or safety requirements: (a) because of their physical or chemical properties, or (b) where human exposure to the extinguishing agents may result in failure to meet applicable use conditions.		Users should observe the limitations on PFC acceptability by taking the following measures: (i) conduct an evaluation of foreseeable conditions of end-use; (ii) determine that the physical or chemical properties or other technical constraints of the other available agents preclude their use; and (iii) determine that human exposure to the other alternative extinguishing agents may result in failure to meet applicable use conditions Documentation of such measures should be available for review upon request. The principal environmental characteristic of concern for PFCs is that they have high GWPs and long atmospheric lifetimes. Actual contributions to global warming depend upon the quantities of PFCs emitted. For additional guidance regarding applications in which PFCs may be appropriate, users should consult the description of potential uses which is included in the March 18, 1994 Final Rule (59 FR 13044.) See comments 1, 2.
Halon 1211 replacement.	HFC-236fa	Acceptable in nonresidential uses when manufactured using any process that does not convert perfluoroisobutylene (PFIB) directly to HFC-236fa in a single step		See comments 1, 2, 3.
Halon 1211 replacement.	HFC-227ea	Acceptable in nonresidential uses only		See comments 1, 2.
Additional comments:				

1—Discharge testing and training should be strictly limited only to that which is essential to meet safety or performance requirements.
2—The agent should be recovered from the fire protection system in conjunction with testing or servicing, and recycled for later use or destroyed.
3—Acceptable for local application systems inside textile process machinery.

FIRE SUPPRESSION AND EXPLOSION PROTECTION—TOTAL FLOODING AGENTS—UNACCEPTABLE SUBSTITUTES

End-use	Substitute	Decision	Comments
Halon 1301 replacement	Chlorobromo-methane	Unacceptable	Other alternatives exist with zero or lower ODP; OSHA regulations prohibit its use as extinguishing agent in fixed extinguishing systems where employees may be exposed. See 29 CFR 1910.160(b)(11).

AEROSOLS—UNACCEPTABLE SUBSTITUTES

End-use	Substitute	Decision	Comments
Solvent in aerosols with CFC-113, MCF, or HCFC-141b.	Chlorobromo-methane	Unacceptable	Other alternatives exist with zero or much lower ODP.

ADHESIVES, COATINGS, AND INKS—UNACCEPTABLE SUBSTITUTES

End-use	Substitute	Decision	Comments
Solvent in adhesives, coatings, and inks with CFC-113.	Chlorobromo-methane	Unacceptable	Other alternatives exist with zero or much lower ODP.
Solvent in adhesives, coatings, and inks with MCF.	Chlorobromo-methane	Unacceptable	Other alternatives exist with zero or much lower ODP.
Solvent in adhesives, coatings and inks with HCFC-141b.	Chlorobromo-methane	Unacceptable	Other alternatives exist with zero or much lower ODP.

[64 FR 22996, Apr. 28, 1999, as amended at 67 FR 4201, Jan. 29, 2002]

APPENDIX I TO SUBPART G OF PART 82—SUBSTITUTES SUBJECT TO USE RESTRICTIONS, LISTED IN THE APRIL 26, 2000, FINAL RULE, EFFECTIVE MAY 26, 2000

FIRE SUPPRESSION AND EXPLOSION PROTECTION—STREAMING AGENTS

[Substitutes Acceptable Subject to Narrowed Use Limits]

End Use	Substitute	Decision	Limitations	Comments
Halon 1211 Streaming Agents ...	HCFC Blend E	Acceptable	Nonresidential uses only.	As with other streaming agents, EPA recommends that potential risks of combustion by-products be labeled on the extinguisher (see UL 2129). See additional comments 1, 2.

Additional Comments:

1. Discharge testing and training should be strictly limited only to that which is essential to meet safety or performance requirements.
2. The agent should be recovered from the fire protection system in conjunction with testing or servicing, and recycled for later use or destroyed.

[65 FR 24392, Apr. 26, 2000, as amended at 67 FR 4202, Jan. 29, 2002]

APPENDIX J TO SUBPART G OF PART 82—SUBSTITUTES LISTED IN THE JANUARY 29, 2002 FINAL RULE, EFFECTIVE APRIL 1, 2002

FIRE SUPPRESSION AND EXPLOSION PROTECTION SECTION—TOTAL FLOODING SUBSTITUTES—ACCEPTABLE SUBJECT TO NARROWED USE LIMITS

End-use	Substitute	Decision	Conditions	Further information
Total flooding	HFC Blend B (Halotron II®) ...	Acceptable subject to narrowed use limits.	Acceptable in areas that are not normally occupied only.	See additional comments 1, 2, 3, 4, 5.

Additional comments:
1—Should conform to relevant OSHA requirements, including 29 CFR 1910, subpart L, Sections 1910.160 and 1910.162.
2—Per OSHA requirements, protective gear (SCBA) should be available in the event personnel should reenter the area.
3—Discharge testing should be strictly limited to that which is essential to meet safety or performance requirements.
4—The agent should be recovered from the fire protection system in conjunction with testing or servicing, and recycled for later use or destroyed.
5—EPA has no intention of duplicating or displacing OSHA coverage related to the use of personal protective equipment (e.g., respiratory protection), fire protection, hazard communication, worker training or any other occupational safety and health standard with respect to halon substitutes.

FIRE SUPPRESSION AND EXPLOSION PROTECTION SECTOR—TOTAL FLOODING SUBSTITUTES—UNACCEPTABLE SUBSTITUTES

End-Use	Substitute	Decision	Further Information
Halon 1301	HBFC–22B1	Unacceptable	HBFC–22B1 is a Class I ozone depleting substance with an ozone depletion potential of 0.74.
Total Flooding Agents	.....	.....	The manufacturer of this agent terminated production of this agent January 1, 1996, except for critical uses, and removed it from the market because it is a fetal toxin.

[67 FR 4202, Jan. 29, 2002, as amended at 71 FR 56367, Sept. 27, 2006]

APPENDIX K TO SUBPART G OF PART 82—SUBSTITUTES SUBJECT TO USE RESTRICTIONS AND UNACCEPTABLE SUBSTITUTES LISTED IN THE JULY 22, 2002, FINAL RULE, EFFECTIVE AUGUST 21, 2002

FOAM BLOWING—UNACCEPTABLE SUBSTITUTES

End-use	Substitute	Decision	Comments
Replacements for HCFC-141b in the following rigid polyurethane/polyisocyanurate applications: —Boardstock —Appliance —Spray	HCFC-22, HCFC-142b and blends thereof.	Unacceptable	Alternatives exist with lower or zero-ODP.
All foam end-uses	HCFC-124	Unacceptable	Alternatives exist with lower or zero-ODP.

[67 FR 47721, July 22, 2002, as amended at 72 FR 14443, Mar. 28, 2007]

APPENDIX L TO SUBPART G OF PART 82—SUBSTITUTES LISTED IN THE JANUARY 27, 2003, FINAL RULE, EFFECTIVE MARCH 28, 2003

FIRE SUPPRESSION AND EXPLOSION PROTECTION SECTOR—TOTAL FLOODING SUBSTITUTES—ACCEPTABLE SUBJECT TO USE CONDITIONS

End-use	Substitute	Decision	Conditions	Comments
Total flooding	HFC227–BC	Acceptable subject to use conditions.	Sodium bicarbonate release in all settings should be targeted so that increased pH level would not adversely affect exposed individuals. Users should provide special training to individuals required to be in environments protected by HFC227–BC extinguishing systems. Each HFC227–BC extinguisher should be clearly labelled with the potential hazards from use and safe handling procedures.	Use of the agent, HFC-227ea, should be in accordance with the safety guidelines in the latest edition of the NFPA 2001 Standard for Clean Agent Fire Extinguishing Systems. *See* additional comments 1, 2, 3, 4, 5.

Additional comments.

1—Should conform with relevant OSHA requirements, including 29 CFR part 1910, subpart L, sections 1910.160 and 1910.162.

2—Per OSHA requirements, protective gear (SCBA) should be available in the event personnel should reenter the area.

3—Discharge testing should be strictly limited to that which is essential to meet safety or performance requirements.

4—The agent should be recovered from the fire protection system in conjunction with testing or servicing, and recycled for later use or destroyed.

5—EPA has no intention of duplicating or displacing OSHA coverage related to the use of personal protective equipment (*e.g.,* respiratory protection), fire protection, hazard communication, worker training or any other occupational safety and health standard with respect to halon substitutes.

FIRE SUPPRESSION AND EXPLOSION PROTECTION SECTOR—STREAMING AGENTS—ACCEPTABLE SUBJECT TO NARROWED USE LIMITS

End-use	Substitute	Decision	Conditions	Comments
Streaming	C6-perfluoroketone (FK-5-1-12MYY2).	Acceptable subject to narrowed use limits.	For use only in non-residential areas.	For operations that fill canisters to be used in streaming applications, EPA recommends the following: —Adequate ventilation should be in place; —All spills should be cleaned up immediately in accordance with good industrial hygiene practices; and —Training for safe handling procedures should be provided to all employees that would be likely to handle containers of the agent or extinguishing units filled with the agent. *See* additional comments 1, 2, 3, 4.
Streaming	H Galden HFPEs	Acceptable subject to narrowed use limits.	For use only in non-residential areas.	For operations that fill canisters to be used in streaming applications, EPA recommends the following: —Adequate ventialtion should be in place; —All spills should be cleaned up immediately in accordance with good industrial hygiene practices; and —Training for safe handling procedures should be provided to all employees that would be likely to handle containers of the agent or extinguishing units filled with the agent. *See* additional comments 1, 2, 3, 4.

Additional comments.

1—Discharge testing should be strictly limited to that which is essential to meet safety or performance requirements.

2—The agent should be recovered from the fire protection system in conjunction with testing or servicing, and recycled for later use or destroyed.

3—EPA has no intention of duplicating or displacing OSHA coverage related to the use of personal protective equipment (*e.g.,* respiratory protection), fire protection, hazard communication, worker training or any other occupational safety and health standard with respect to halon substitutes.

4—As with other streaming agents, EPA recommends that potential risks of combustion by-products be labelled on the extinguisher (*see* UL 2129)

[68 FR 4010, Jan. 27, 2003]

APPENDIX M TO SUBPART G—UNACCEPTABLE SUBSTITUTES LISTED IN THE SEPTEMBER 30, 2004 FINAL RULE, EFFECTIVE NOVEMBER 29, 2004

FOAM BLOWING—UNACCEPTABLE SUBSTITUTES

End-use	Substitute	Decision	Comments
All foam end-uses: —Rigid polyurethane and polyisocyanurate laminated boardstock —Rigid polyurethane appliance —Rigid polyurethane spray and commercial refrigeration, and sandwich panels —Rigid polyurethane slabstock and other foams —Polystyrene extruded insulation boardstock and billet —Phenolic insulation board and bunstock —Flexible polyurethane —Polystyrene extruded sheet **Except for:** [1] —Space vehicle —Nuclear —Defense —Research and development for foreign customers	HCFC–141b	Unacceptable	Alternatives exist with lower or zero = ODP.

[1] Exemptions for specific applications are identified in the list of acceptable substitutes.

[69 FR 58279, Sept. 30, 2004]

APPENDIX N TO SUBPART G OF PART 82 [RESERVED]

APPENDIX O TO SUBPART G OF PART 82—SUBSTITUTES LISTED IN THE SEPTEMBER 27, 2006 FINAL RULE, EFFECTIVE NOVEMBER 27, 2006

FIRE SUPPRESSION AND EXPLOSION PROTECTION SECTOR—TOTAL FLOODING SUBSTITUTES—ACCEPTABLE SUBJECT TO USE CONDITIONS

End-use	Substitute	Decision	Conditions	Further information
Total flooding	Gelled Halocarbon/Dry Chemical Suspension (Envirogel) with sodium bicarbonate additive.	Acceptable subject to use conditions.	Use of whichever hydrofluorocarbon gas (HFC–125, HFC–227ea, or HFC–236fa) is employed in the formulation must be in accordance with all requirements for acceptability (i.e., narrowed use limits) of that HFC under EPA's SNAP program.	Use of this agent should be in accordance with the safety guidelines in the latest edition of the NFPA 2001 Standard for Clean Agent Fire Extinguishing Systems, for whichever hydrofluorocarbon gas is employed, and the latest edition of the NFPA 2010 standard for Aerosol Extinguishing Systems. Sodium bicarbonate release in all settings should be targeted so that increased blood pH level would not adversely affect exposed individuals. Users should provide special training, including the potential hazards associated with the use of the HFC agent and sodium bicarbonate, to individuals required to be in environments protected by Envirogel with sodium bicarbonate additive extinguishing systems. Each extinguisher should be clearly labeled with the potential hazards from use and safe handling procedures. See additional comments 1, 2, 3, 4, 5

FIRE SUPPRESSION AND EXPLOSION PROTECTION SECTOR—TOTAL FLOODING SUBSTITUTES—ACCEPTABLE SUBJECT TO USE CONDITIONS—Continued

End-use	Substitute	Decision	Conditions	Further information
Total flooding	Powdered Aerosol D (Aero-K®, Stat-X®).	Acceptable subject to use conditions.	For use only in normally unoccupied areas.	Use of this agent should be in accordance with the safety guidelines in the latest edition of the NFPA 2010 standard for Aerosol Extinguishing Systems. For establishments manufacturing the agent or filling, installing, or servicing containers or systems to be used in total flooding applications, EPA recommends the following: —Adequate ventilation should be in place to reduce airborne exposure to constituents of agent; —An eye wash fountain and quick drench facility should be close to the production area; —Training for safe handling procedures should be provided to all employees that would be likely to handle containers of the agent or extinguishing units filled with the agent; —Workers responsible for clean up should allow for maximum settling of all particulates before reentering area and wear appropriate protective equipment; and —All spills should be cleaned up immediately in accordance with good industrial hygiene practices. See additional comments 1, 2, 3, 4, 5.

FIRE SUPPRESSION AND EXPLOSION PROTECTION SECTOR—TOTAL FLOODING SUBSTITUTES—ACCEPTABLE SUBJECT TO USE CONDITIONS—Continued

End-use	Substitute	Decision	Conditions	Further information
Total flooding	Powdered Aerosol E (FirePro®).	Acceptable subject to use conditions.	For use only in normally unoccupied areas.	Use of this agent should be in accordance with the safety guidelines in the latest edition of the NFPA 2010 standard for Aerosol Extinguishing Systems. For establishments manufacturing the agent or filling, installing, or servicing containers or systems to be used in total flooding applications, EPA recommends the following: —Adequate ventilation should be in place to reduce airborne exposure to constituents of agent; —An eye wash fountain and quick drench facility should be close to the production area; —Training for safe handling procedures should be provided to all employees that would be likely to handle containers of the agent or extinguishing units filled with the agent; —Workers responsible for clean up should allow for maximum settling of all particulates before reentering area and wear appropriate protective equipment; and —All spills should be cleaned up immediately in accordance with good industrial hygiene practices. See additional comments 1, 2, 3, 4, 5.
Total flooding	Phosphorous Tribromide (PBr_3).	Acceptable subject to use conditions.	For use only in aircraft engine nacelles.	For establishments manufacturing the agent or filling, installing, or servicing containers or systems, EPA recommends the following: —Adequate ventilation should be in place and/or positive pressure, self-contained breathing apparatus (SCBA) should be worn; —Training for safe handling procedures should be provided to all employees that would be likely to handle containers of the agent or extinguishing units filled with the agent; and —All spills should be cleaned up immediately in accordance with good industrial hygiene practices. See additional comments 1, 2, 3, 4, 5.

Additional comments:

1—Should conform to relevant OSHA requirements, including 29 CFR 1910, subpart L, Sections 1910.160 and 1910.162.

2—Per OSHA requirements, protective gear (SCBA) should be available in the event personnel should reenter the area.

3—Discharge testing should be strictly limited to that which is essential to meet safety or performance requirements.

4—The agent should be recovered from the fire protection system in conjunction with testing or servicing, and recycled for later use or destroyed.

5—EPA has no intention of duplicating or displacing OSHA coverage related to the use of personal protective equipment (e.g., respiratory protection), fire protection, hazard communication, worker training or any other occupational safety and health standard with respect to halon substitutes.

[71 FR 56367, Sept. 27, 2006]

APPENDIX P TO SUBPART G OF PART 82—SUBSTITUTES LISTED IN THE SEPTEMBER 27, 2006 FINAL RULE, EFFECTIVE NOVEMBER 27, 2006

FIRE SUPPRESSION AND EXPLOSION PROTECTION SECTOR—TOTAL FLOODING AGENTS—ACCEPTABLE SUBJECT TO NARROWED USE LIMITS

End-use	Substitute	Decision	Conditions	Further information
Total flooding	Gelled Halocarbon/Dry Chemical Suspension with any agent other than ammonium polyphosphate or sodium bicarbonate additive (Envirogel with sodium bicarbonate additive).	Acceptable subject to narrowed use limits.	For use only in normally unoccupied areas.	Use of this agent should be in accordance with the safety guidelines in the latest edition of the NFPA 2001 Standard for Clean Agent Fire Extinguishing Systems, for whichever hydrofluorocarbon gas is employed. Envirogel is listed as a streaming substitute under the generic name Gelled Halocarbon/Dry Chemical Suspension. Envirogel was also previously listed as a total flooding substitute under the same generic name. EPA has found Envirogel with the ammonium polyphosphate additive and Envirogel with the sodium bicarbonate additive to be acceptable as total flooding agents in both occupied and unoccupied areas. See additional comments 1, 2, 3, 4, 5

Additional comments:
1—Should conform to relevant OSHA requirements, including 29 CFR 1910, subpart L, Sections 1910.160 and 1910.162.
2—Per OSHA requirements, protective gear (SCBA) should be available in the event personnel should reenter the area.
3—Discharge testing should be strictly limited to that which is essential to meet safety or performance requirements.
4—The agent should be recovered from the fire protection system in conjunction with testing or servicing, and recycled for later use or destroyed.
5—EPA has no intention of duplicating or displacing OSHA coverage related to the use of personal protective equipment (*e.g.*, respiratory protection), fire protection, hazard communication, worker training or any other occupational safety and health standard with respect to halon substitutes.

[71 FR 56367, Sept. 27, 2006]

APPENDIX Q TO SUBPART G OF PART 82—UNACCEPTABLE SUBSTITUTES LISTED IN THE MARCH 28, 2007 FINAL RULE, EFFECTIVE MAY 29, 2007

FOAM BLOWING UNACCEPTABLE SUBSTITUTES

End use	Substitute	Decision	Further information
—Rigid polyurethane commercial refrigeration .... —Rigid polyurethane sandwich panels. —Rigid polyurethane slabstock and other foams.	HCFC–22; HCFC–142b as substitutes for HCFC–141b.	Unacceptable [1]	Alternatives exist with lower or zero-ODP.
—Rigid polyurethane and polyisocyanurate laminated boardstock. —Rigid polyurethane appliance. —Rigid polyurethane spray and commercial refrigeration, and sandwich panels. —Rigid polyurethane slabstock and other foams. —Polystyrene extruded insulation boardstock and billet. —Phenolic insulation board and bunstock. —Flexible polyurethane. —Polystyrene extruded sheet.	HCFC–22; HCFC–142b as substitutes for CFCs.	Unacceptable [2]	Alternatives exist with lower or zero-ODP.

[1] For existing users of HCFC–22 and HCFC–142b as of November 4, 2005 other than in marine applications, the unacceptability determination is effective on March 1, 2008; for existing users of HCFC–22 and HCFC–142b as of November 4, 2005 in marine applications, including marine flotation foam, the unacceptability determination is effective on September 1, 2009. For an existing user of HCFC–22 or HCFC–142b that currently operates in only one facility that it does not own, and is scheduled to transition to a non-ODS, flammable alternative to coincide with a move to a new facility and installation of new process equipment that cannot be completed by March 1, 2008, the unacceptability determination is effective January 1, 2010.
[2] For existing users of HCFC–22 and HCFC–142b in polystyrene extruded insulation boardstock and billet and the other foam end uses, as of November 4, 2005, the unacceptability determination is effective on January 1, 2010.

[72 FR 14442, Mar. 28, 2007]

APPENDIX R TO SUBPART G OF PART 82—SUBSTITUTES SUBJECT TO USE RESTRICTIONS LISTED IN THE DECEMBER 20, 2011 FINAL RULE, EFFECTIVE FEBRUARY 21, 2012

SUBSTITUTES THAT ARE ACCEPTABLE SUBJECT TO USE CONDITIONS

End-use	Substitute	Decision	Use conditions	Further information
Household refrigerators, freezers, and combination refrigerators and freezers. (New equipment only)	Isobutane (R–600a) as a substitute for CFC–12 and HCFC–22. R–441A as a substitute for CFC–12 and HCFC–22	Acceptable Subject To Use Conditions.	These refrigerants may be used only in new equipment designed specifically and clearly identified for the refrigerant (*i.e.,* none of these substitutes may be used as a conversion or ''retrofit'' refrigerant for existing equipment designed for a different refrigerant) These refrigerants may be used only in a refrigerator or freezer, or combination refrigerator and freezer, that meets all requirements listed in Supplement SA to the 10th edition of the Underwriters Laboratories (UL) Standard for Household Refrigerators and Freezers, UL 250, dated 1993 updated August 2000. In cases where the final rule includes requirements more stringent than those of the 10th edition of UL 250, the appliance must meet the requirements of the final rule in place of the requirements in the UL Standard The quantity of the substitute refrigerant (*i.e.,* ''charge size'') shall not exceed 57 grams (2.0 ounces) in any refrigerator, freezer, or combination refrigerator and freezer for each circuit	Applicable OSHA requirements at 29 CFR part 1910 must be followed, including those at 29 CFR 1910.106 (flammable and combustible liquids), 1910.110 (storage and handling of liquefied petroleum gases), 1910.157 (portable fire extinguishers), and 1910.1000 (toxic and hazardous substances). Proper ventilation should be maintained at all times during the manufacture and storage of equipment containing hydrocarbon refrigerants through adherence to good manufacturing practices as per 29 CFR 1910.106. If refrigerant levels in the air surrounding the equipment rise above one-fourth of the lower flammability limit, the space should be evacuated and re-entry should occur only after the space has been properly ventilated. Technicians and equipment manufacturers should wear appropriate personal protective equipment, including chemical goggles and protective gloves, when handling isobutane and R–441A. Special care should be taken to avoid contact with the skin since these refrigerants, like many refrigerants, can cause freeze burns on the skin. A class B dry powder type fire extinguisher should be kept nearby. Technicians should only use spark-proof tools when working on refrigerators and freezers with isobutane and R–441A. Recovery equipment designed for flammable refrigerants should be used.

SUBSTITUTES THAT ARE ACCEPTABLE SUBJECT TO USE CONDITIONS—Continued

End-use	Substitute	Decision	Use conditions	Further information
				Only technicians specifically trained in handling flammable refrigerants should service refrigerators and freezers containing these refrigerants. Technicians should gain an understanding of minimizing the risk of fire and the steps to use flammable refrigerants safely.
Household refrigerators, freezers, and combination refrigerators and freezers. (New equipment only)	Isobutane (R–600a) as a substitute for CFC–12 and HCFC–22. R–441A as a substitute for CFC–12 and HCFC–22	Acceptable Subject To Use Conditions.	As provided in clauses SA6.1.1 and SA6.1.2 of UL Standard 250, the following markings shall be attached at the locations provided and shall be permanent: (a) On or near any evaporators that can be contacted by the consumer: ''DANGER-Risk of Fire or Explosion. Flammable Refrigerant Used. Do Not Use Mechanical Devices To Defrost Refrigerator. Do Not Puncture Refrigerant Tubing.'' (b) Near the machine compartment: ''DANGER-Risk of Fire or Explosion. Flammable Refrigerant Used. To Be Repaired Only By Trained Service Personnel. Do Not Puncture Refrigerant Tubing.'' (c) Near the machine compartment: ''CAUTION—Risk of Fire or Explosion. Flammable Refrigerant Used. Consult Repair Manual/Owner's Guide Before Attempting To Service This Product. All Safety Precautions Must be Followed.'' (d) On the exterior of the refrigerator: ''CAUTION—Risk of Fire or Explosion. Dispose of Properly In Accordance With Federal Or Local Regulations. Flammable Refrigerant Used.'' (e) Near any and all exposed refrigerant tubing: ''CAUTION—Risk of Fire or Explosion Due To Puncture Of Refrigerant Tubing; Follow Handling Instructions Carefully. Flammable Refrigerant Used.''	Room occupants should evacuate the space immediately following the accidental release of this refrigerant. If a service port is added then household refrigerators, freezers, and combination refrigerator and freezers using these refrigerants should have service aperture fittings that differ from fittings used in equipment or containers using non-flammable refrigerant. ''Differ'' means that either the diameter differs by at least 1/16 inch or the thread direction is reversed (*i.e.,* right-handed vs. left-handed). These different fittings should be permanently affixed to the unit at the point of service and maintained until the end-of-life of the unit, and should not be accessed with an adaptor.

SUBSTITUTES THAT ARE ACCEPTABLE SUBJECT TO USE CONDITIONS—Continued

End-use	Substitute	Decision	Use conditions	Further information
			All of these markings shall be in letters no less than 6.4 mm (¼ inch) high. The refrigerator, freezer, or combination refrigerator and freezer must have red, Pantone® Matching System (PMS) #185 marked pipes, hoses, or other devices through which the refrigerant is serviced (typically known as the service port) to indicate the use of a flammable refrigerant. This color must be present at all service ports and where service puncturing or otherwise creating an opening from the refrigerant circuit to the atmosphere might be expected (*e.g.,* process tubes). The color mark must extend at least 2.5 centimeters (1 inch) from the compressor and must be replaced if removed.	

SUBSTITUTES THAT ARE ACCEPTABLE SUBJECT TO USE CONDITIONS—Continued

End-use	Substitute	Decision	Use conditions	Further information
Retail food refrigerators and freezers (stand-alone units only). (New equipment only)	Propane (R–290) as a substitute for CFC–12, HCFC–22, and R–502.	Acceptable subject to use conditions.	These refrigerants may be used only in new equipment specifically designed and clearly identified for the refrigerants (*i.e.,* none of these substitutes may be used as a conversion or ''retrofit'' refrigerant for existing equipment designed for other refrigerants). These substitutes may only be used in equipment that meets all requirements in Supplement SB to the 10th edition of the Underwriters Laboratories (UL) Standard for Commercial Refrigerators and Freezers, UL 471, dated November 2010. In cases where the final rule includes requirements more stringent than those of the 10th edition of UL 471, the appliance must meet the requirements of the final rule in place of the requirements in the UL Standard. The charge size for the retail food refrigerator or freezer shall not exceed 150 grams (5.3 ounces) in each circuit.	Applicable OSHA requirements at 29 CFR part 1910 must be followed, including those at 29 CFR 1910.94 (ventilation) and 1910.106 (flammable and combustible liquids), 1910.110 (storage and handling of liquefied petroleum gases), and 1910.1000 (toxic and hazardous substances). Proper ventilation should be maintained at all times during the manufacture and storage of equipment containing hydrocarbon refrigerants through adherence to good manufacturing practices as per 29 CFR 1910.106. If refrigerant levels in the air surrounding the equipment rise above one-fourth of the lower flammability limit, the space should be evacuated and re-entry should occur only after the space has been properly ventilated. Technicians and equipment manufacturers should wear appropriate personal protective equipment, including chemical goggles and protective gloves, when handling propane. Special care should be taken to avoid contact with the skin since propane, like many refrigerants, can cause freeze burns on the skin. A class B dry powder type fire extinguisher should be kept nearby. Technicians should only use spark-proof tools when working on refrigerators and freezers with propane. Recovery equipment designed for flammable refrigerants should be used.

SUBSTITUTES THAT ARE ACCEPTABLE SUBJECT TO USE CONDITIONS—Continued

End-use	Substitute	Decision	Use conditions	Further information
				Only technicians specifically trained in handling flammable refrigerants should service refrigerators and freezers containing these refrigerants. Technicians should gain an understanding of minimizing the risk of fire and the steps to use flammable refrigerants safely.
Retail food refrigerators and freezers (stand-alone units only). (New equipment only)	Propane (R–290) as a substitute for CFC–12, HCFC–22, and R–502.	Acceptable subject to use conditions.	As provided in clauses SB6.1.2 to SB6.1.5 of UL Standard 471, the following markings shall be attached at the locations provided and shall be permanent: (a) Attach on or near any evaporators that can be contacted by the consumer: ''DANGER-Risk of Fire or Explosion. Flammable Refrigerant Used. Do Not Use Mechanical Devices To Defrost Refrigerator. Do Not Puncture Refrigerant Tubing.'' (b) Attach near the machine compartment: ''DANGER-Risk of Fire or Explosion. Flammable Refrigerant Used. To Be Repaired Only By Trained Service Personnel. Do Not Puncture Refrigerant Tubing.'' (c) Attach near the machine compartment: ''CAUTION—Risk of Fire or Explosion. Flammable Refrigerant Used. Consult Repair Manual/Owner's Guide Before Attempting To Service This Product. All Safety Precautions Must be Followed.'' (d) Attach on the exterior of the refrigerator: ''CAUTION—Risk of Fire or Explosion. Dispose of Properly In Accordance With Federal Or Local Regulations. Flammable Refrigerant Used.''	Room occupants should evacuate the space immediately following the accidental release of this refrigerant. If a service port is added then household refrigerators, freezers, and combination refrigerator and freezers using these refrigerants should have service aperture fittings that differ from fittings used in equipment or containers using non-flammable refrigerant. ''Differ'' means that either the diameter differs by at least 1/16 inch or the thread direction is reversed (*i.e.,* right-handed vs. left-handed). These different fittings should be permanently affixed to the unit at the point of service and maintained until the end-of-life of the unit, and should not be accessed with an adaptor.

SUBSTITUTES THAT ARE ACCEPTABLE SUBJECT TO USE CONDITIONS—Continued

End-use	Substitute	Decision	Use conditions	Further information
			(e) Attach near any and all exposed refrigerant tubing: ''CAUTION—Risk of Fire or Explosion Due To Puncture Of Refrigerant Tubing; Follow Handling Instructions Carefully. Flammable Refrigerant Used.'' All of these markings shall be in letters no less than 6.4 mm (¼ inch) high. The refrigerator or freezer must have red, Pantone® Matching System (PMS) #185 marked pipes, hoses, and other devices through which the refrigerant is serviced, typically known as the service port, to indicate the use of a flammable refrigerant. This color must be present at all service ports and where service puncturing or otherwise creating an opening from the refrigerant circuit to the atmosphere might be expected (*e.g.,* process tubes). The color mark must extend at least 2.5 centimeters (1 inch) from the compressor and must be replaced if removed.	

Note: In accordance with the limitations provided in section 310(a) of the Clean Air Act (42 U.S.C. 7610(a)), nothing in this table shall affect the Occupational Safety and Health Administrations' authority to promulgate and enforce standards and other requirements under the Occupational Safety and Health Act of 1970 (29 U.S.C. 651 *et seq.*).

Note: The use conditions in this appendix contain references to certain standards from Underwriters Laboratories Inc. (UL). The standards are incorporated by reference, and the referenced sections are made part of the regulations in part 82:

1. UL 250: Household Refrigerators and Freezers. 10th edition. Supplement SA: Requirements for Refrigerators and Freezers Employing a Flammable Refrigerant in the Refrigerating System. Underwriters Laboratories, Inc. August 25, 2000.

2. UL 471. Commercial Refrigerators and Freezers. 10th edition. Supplement SB: Requirements for Refrigerators and Freezers Employing a Flammable Refrigerant in the Refrigerating System. Underwriters Laboratories, Inc. November 24, 2010.

The Director of the Federal Register approves this incorporation by reference in accordance with 5 U.S.C. 552(a) and 1 CFR part 51. Copies of UL Standards 250 and 471 may be purchased by mail at: COMM 2000; 151 Eastern Avenue, Bensenville, IL 60106; Email: *orders@comm-2000.com;* Telephone: 1 (888) 853–3503 in the U.S. or Canada (other countries dial +1 (415) 352–2168); Internet address: *http://ulstandardsinfonet.ul.com/* or *www.comm-2000.com.*

You may inspect a copy at U.S. EPA's Air and Radiation Docket; EPA West Building, Room 3334, 1301 Constitution Ave. NW., Washington DC or at the National Archives and Records Administration (NARA). For questions regarding access to these standards, the telephone number of EPA's Air and Radiation Docket is (202) 566–1742. For information on the availability of this material at NARA, call (202) 741–6030, or go to:*http://www.archives.gov/federal__register/code__of__federal__regulations/ibr__locations.html.*

[76 FR 78855, Dec. 20, 2011]

Subpart H—Halon Emissions Reduction

SOURCE: 63 FR 11096, Mar. 5, 1998, unless otherwise noted.

§ 82.250 Purpose and scope.

(a) The purpose of this subpart is to reduce the emissions of halon in accordance with section 608 of the Clean Air Act by banning the manufacture of halon blends; banning the intentional release of halons during repair, testing, and disposal of equipment containing halons and during technician training; requiring organizations that employ technicians to provide emissions reduction training; and requiring proper disposal of halons and equipment containing halons.

(b) This subpart applies to any person testing, servicing, maintaining, repairing or disposing of equipment that contains halons or using such equipment during technician training. This subpart also applies to any person disposing of halons; to manufacturers of halon blends; and to organizations that employ technicians who service halon-containing equipment.

§ 82.260 Definitions.

Halon-containing equipment means equipment used to store, transfer, and/or disperse halon.

Disposal of halon means the process leading to and including discarding of halon from halon-containing equipment.

Disposal of halon-containing equipment means the process leading to and including:

(1) The discharge, deposit, dumping or placing of any discarded halon-containing equipment into or on any land or water;

(2) The disassembly of any halon-containing equipment for discharge, deposit, or dumping or placing of its discarded component parts into or on any land or water; or

(3) The disassembly of any halon-containing equipment for reuse of its component parts.

Halon means any of the Class I, Group II substances listed in subpart A, appendix A of 40 CFR part 82. This group consists of the three halogenated hydrocarbons known as Halon 1211, Halon 1301, and Halon 2402, and all isomers of these chemicals.

Halon product means any mixture or combination of substances that contains only one halon (e.g., Halon 1301 plus dinitrogen gas (N_2))

Halon blend means any mixture or combination of substances that contains two or more halons.

Manufacturer means any person engaged in the direct manufacture of halon, halon blends or halon-containing equipment.

Person means any individual or legal entity, including an individual, corporation, partnership, association, state, municipality, political subdivision of a state, Indian tribe, and any agency, department, or instrumentality of the United States, and any officer, agent, or employee thereof.

Technician means any person who performs testing, maintenance, service, or repair that could reasonably be expected to release halons from equipment into the atmosphere. Technician also means any person who performs disposal of equipment that could reasonably be expected to release halons from the equipment into the atmosphere. Technician includes but is not limited to installers, contractor employees, in-house service personnel, and in some cases, owners.

§ 82.270 Prohibitions.

(a) Effective April 6, 1998 no person may newly manufacture any halon blend. Halon blends manufactured solely for the purpose of aviation fire protection are not subject to this prohibition, provided that:

(1) The manufacturer or its designee is capable of recycling the blend to the relevant industry standards for the chemical purity of each individual halon;

(2) The manufacturer includes in all sales contracts for blends produced by it on or after April 6, 1998 the provision that the blend must be returned to it or its designee for recycling; and

(3) The manufacturer or its designee in fact recycles blends produced by the manufacturer on or after April 6, 1998 and returned to it for recycling to the relevant industry standards for the chemical purity of each individual halon.

(b) Effective April 6, 1998, no person testing, maintaining, servicing, repairing, or disposing of halon-containing equipment or using such equipment for technician training may knowingly vent or otherwise release into the environment any halons used in such equipment.

(1) De minimis releases associated with good faith attempts to recycle or recover halon are not subject to this prohibition.

(2) Release of residual halon contained in fully discharged total flooding fire extinguishing systems would be considered a *de minimis* release associated with good faith attempts to recycle or recover halon.

(3) Release of halons during testing of fire extinguishing systems is not subject to this prohibition if the following four conditions are met:

(i) Systems or equipment employing suitable alternative fire extinguishing agents are not available;

(ii) System or equipment testing requiring release of extinguishing agent is essential to demonstrate system or equipment functionality;

(iii) Failure of the system or equipment would pose great risk to human safety or the environment; and

(iv) A simulant agent cannot be used in place of the halon during system or equipment testing for technical reasons.

(4) Releases of halons associated with research and development of halon alternatives, and releases of halons necessary during analytical determination of halon purity using established laboratory practices are exempt from this prohibition.

(5) This prohibition does not apply to qualification and development testing during the design and development process of halon-containing systems or equipment when such tests are essential to demonstrate system or equipment functionality and when a suitable simulant agent can not be used in place of the halon for technical reasons.

(6) This prohibition does not apply to the emergency release of halons for the legitimate purpose of fire extinguishing, explosion inertion, or other emergency applications for which the equipment or systems were designed.

(c) Effective April 6, 1998, organizations that employ technicians who test, maintain, service, repair or dispose of halon-containing equipment shall take appropriate steps to ensure that technicians hired on or before April 6, 1998 will be trained regarding halon emissions reduction by September 1, 1998. Technicians hired after April 6, 1998 shall be trained regarding halon emissions reduction within 30 days of hiring, or by September 1, 1998, whichever is later.

(d) Effective April 6, 1998, no person shall dispose of halon-containing equipment except by sending it for halon recovery to a manufacturer operating in accordance with NFPA 10 and NFPA 12A standards, a fire equipment dealer operating in accordance with NFPA 10 and NFPA 12A standards or a recycler operating in accordance with NFPA 10 and NFPA 12A standards. This provision does not apply to ancillary system devices such as electrical detection control components which are not necessary to the safe and secure containment of the halon within the equipment, to fully discharged total flooding systems, or to equipment containing only de minimis quantities of halons.

(e) Effective April 6, 1998, no person shall dispose of halon except by sending it for recycling to a recycler operating in accordance with NFPA 10 and NFPA 12A standards, or by arranging for its destruction using one of the following controlled processes:

(1) Liquid injection incineration;

(2) Reactor cracking;

(3) Gaseous/fume oxidation;

(4) Rotary kiln incineration;

(5) Cement kiln;

(6) Radiofrequency plasma destruction; or

(7) An EPA-approved destruction technology that achieves a destruction efficiency of 98% or greater.

(f) Effective April 6, 1998, no owner of halon-containing equipment shall allow halon release to occur as a result of failure to maintain such equipment.

Subpart I—Ban on Refrigeration and Air-Conditioning Appliances Containing HCFCs

SOURCE: 74 FR 66467, Dec. 15, 2009, unless otherwise noted.

§ 82.300 Purpose.

The purpose of this subpart is to protect stratospheric ozone by restricting the sale and distribution of HCFC containing appliances under authority of section 615 of the Clean Air Act as amended in 1990.

§ 82.302 Definitions.

As used in this subpart, the term:

Appliance means any device which contains and uses a refrigerant and which is used for household or commercial purposes, including any air conditioner, refrigerator, chiller, or freezer.

Class I substance means any controlled substance designated as class I in 40 CFR part 82, appendix A to subpart A.

Class II substance means any controlled substance designated as class II in 40 CFR part 82, appendix B to subpart A.

Consumer, when used to describe a person taking action with regard to a product, means the ultimate purchaser, recipient or user of a product.

Distributor, when used to describe a person taking action with regard to a product, means:

(1) The seller of a product to a consumer or another distributor; or

(2) A person who sells or distributes that product in interstate commerce, including sale or distribution preceding export from, or following import to, the United States.

Hydrochlorofluorocarbon means any substance listed as class II in 40 CFR part 82, appendix B to subpart A.

Manufactured, for an appliance, means the date on which the appliance's refrigerant circuit is complete, the appliance can function, the appliance holds a refrigerant charge, and the appliance is ready for use for its intended purposes; for a pre-charged appliance component, ''manufactured'' means the date that the original equipment manufacturer has physically completed assembly of the component, the component is charged with refrigerant, and the component is ready for initial sale or distribution.

Person means any individual or legal entity, including an individual, corporation, partnership, association, State, municipality, political subdivision of a State, Indian tribe; any agency, department, or instrumentality of the United States; and any officer, agent, or employee thereof.

Pre-charged appliance means any appliance charged with refrigerant prior to sale or distribution, or offer for sale or distribution in interstate commerce.

Pre-charged appliance component means any portion of an appliance including but not limited to condensers, compressors, line sets, and coils that is charged with refrigerant prior to sale or distribution or offer for sale or distribution in interstate commerce.

Product means an item or category of items manufactured from raw or recycled materials which is used to perform a function or task.

Refrigerant means, for purposes of this subpart, any substance consisting in part or whole of a class I or class II ozone-depleting substance that is used for heat transfer purposes and provides a cooling effect.

§ 82.304 Prohibitions.

Effective January 1, 2010, no person may sell or distribute, or offer to sell or distribute, in interstate commerce any product identified in § 82.306.

§ 82.306 Prohibited products.

Effective January 1, 2010, the following products are subject to the prohibitions specified under § 82.304—

(a) Any pre-charged appliance manufactured on or after January 1, 2010 containing HCFC–22, HCFC–142b or a blend containing one or both of these controlled substances.

(b) Any pre-charged appliance component for air-conditioning or refrigeration appliances manufactured on or after January 1, 2010 containing HCFC–22, HCFC–142b, or a blend containing one or both of these controlled substances.

PARTS 83–84 [RESERVED]