AUTHENTICATED
U.S. GOVERNMENT
INFORMATION
GPO

TABLE C94–3.3—CREDIT NEEDED IN LIEU OF PURCHASING A LEV TO MEET THE MANDATE

CO	LDV, LDT ≤6000 GVWR, ≤3750 LVW	LDT ≤6000 GVWR, >3750 LVW ≤5750 LVW	LDT >6000 GVWR, ≤3750 ALVW	LDT >6000 GVWR, >3750 ALVW ≤5750 ALVW	LDT >6000 GVWR, >5750 ALVW
LEV	1.00	1.00	1.00	1.00	1.00

TABLE C94–4—FLEET CREDIT TABLE BASED ON REDUCTION IN NMHC+NO_X. VEHICLE EQUIVALENTS FOR HEAVY-DUTY VEHICLES—TABLE C94–4.1—CREDIT GENERATION: PURCHASING MORE CLEAN-FUEL VEHICLES THAN REQUIRED BY THE MANDATE

NMHC+NO_X	Light HDV	Medium HDV	Heavy HDV
LEV	1.00	1.00	1.00
ULEV	1.87	1.87	1.87
ZEV	3.53	3.53	3.53

TABLE C94–4.2—CREDIT GENERATION: PURCHASING A ULEV OR ZEV TO MEET THE MANDATE

NMHC+NO_X	Light HDV	Medium HDV
LEV	0.00	0.00
ULEV	0.87	0.87
ZEV	2.53	2.53

TABLE C94–4.3—CREDIT NEEDED IN LIEU OF PURCHASING A LEV TO MEET THE MANDATE

NMHC+NO_X	Light HDV	Medium HDV
LEV	1.00	1.00

TABLE C94–5—FLEET CREDIT TABLE BASED ON REDUCTION IN CO. VEHICLE EQUIVALENTS FOR HEAVY-DUTY VEHICLES—TABLE C94–5.1—CREDIT GENERATION: PURCHASING MORE CLEAN-FUEL VEHICLES THAN REQUIRED BY THE MANDATE

CO	Light HDV	Medium HDV	Heavy HDV
LEV	1.00	1.00	1.00
ULEV	2.00	2.00	2.00
ZEV	3.00	3.00	3.00

TABLE C94–5.2—CREDIT GENERATION: PURCHASING A ULEV OR ZEV TO MEET THE MANDATE

CO	Light HDV	Medium HDV
LEV	0.00	0.00
ULEV	1.00	1.00

TABLE C94–5.2—CREDIT GENERATION: PURCHASING A ULEV OR ZEV TO MEET THE MANDATE—Continued

CO	Light HDV	Medium HDV
ZEV	2.00	2.00

TABLE C94–5.3—CREDIT NEEDED IN LIEU OF PURCHASING A LEV TO MEET THE MANDATE

CO	Light HDV	Medium HDV
LEV	1.00	1.00

[58 FR 11901, Mar. 1, 1993, as amended at 59 FR 50082, Sept. 30, 1994, 61 FR 128, Jan. 3, 1996]

PART 89—CONTROL OF EMISSIONS FROM NEW AND IN-USE NONROAD COMPRESSION-IGNITION ENGINES

Subpart A—General

Sec.
89.1 Applicability.
89.2 Definitions.
89.3 Acronyms and abbreviations.
89.4 [Reserved]
89.5 Table and figure numbering; position.
89.6 Reference materials.
89.7 Treatment of confidential information.
APPENDIX A TO SUBPART A—STATE REGULATION OF NONROAD INTERNAL COMBUSTION ENGINES

Subpart B—Emission Standards and Certification Provisions

89.101 Applicability.
89.102 Effective dates, optional inclusion, flexibility for equipment manufacturers.
89.103 Definitions.
89.104 Useful life, recall, and warranty periods.
89.105 Certificate of conformity.
89.106 Prohibited controls.
89.107 Defeat devices.
89.108 Adjustable parameters, requirements.
89.109 Maintenance instructions and minimum allowable maintenance intervals.

89.110 Emission control information label.
89.111 Averaging, banking, and trading of exhaust emissions.
89.112 Oxides of nitrogen, carbon monoxide, hydrocarbon, and particulate matter exhaust emission standards.
89.113 Smoke emission standard.
89.114 Special and alternate test procedures.
89.115 Application for certificate.
89.116 Engine families.
89.117 Test fleet selection.
89.118 Deterioration factors and service accumulation.
89.119 Emission tests.
89.120 Compliance with emission standards.
89.121 Certificate of conformity effective dates.
89.122 Certification.
89.123 Amending the application and certificate of conformity.
89.124 Record retention, maintenance, and submission.
89.125 Production engines, annual report.
89.126 Denial, revocation of certificate of conformity.
89.127 Request for hearing.
89.128 Hearing procedures.
89.129 Right of entry.
89.130 Rebuild practices.

Subpart C—Averaging, Banking, and Trading Provisions

89.201 Applicability.
89.202 Definitions.
89.203 General provisions.
89.204 Averaging.
89.205 Banking.
89.206 Trading.
89.207 Credit calculation.
89.208 Labeling.
89.209 Certification.
89.210 Maintenance of records.
89.211 End-of-year and final reports.
89.212 Notice of opportunity for hearing.

Subpart D—Emission Test Equipment Provisions

89.301 Scope; applicability.
89.302 Definitions.
89.303 Symbols/abbreviations.
89.304 Equipment required for gaseous emissions; overview.
89.305 Equipment measurement accuracy/calibration frequency.
89.306 Dynamometer specifications and calibration weights.
89.307 Dynamometer calibration.
89.308 Sampling system requirements for gaseous emissions.
89.309 Analyzers required for gaseous emissions.
89.310 Analyzer accuracy and specifications.
89.311 Analyzer calibration frequency.
89.312 Analytical gases.
89.313 Initial calibration of analyzers.
89.314 Pre- and post-test calibration of analyzers.
89.315 Analyzer bench checks.
89.316 Analyzer leakage and response time.
89.317 NO_X converter check.
89.318 Analyzer interference checks.
89.319 Hydrocarbon analyzer calibration.
89.320 Carbon monoxide analyzer calibration.
89.321 Oxides of nitrogen analyzer calibration.
89.322 Carbon dioxide analyzer calibration.
89.323 NDIR analyzer calibration.
89.324 Calibration of other equipment.
89.325 Engine intake air temperature measurement.
89.326 Engine intake air humidity measurement.
89.327 Charge cooling.
89.328 Inlet and exhaust restrictions.
89.329 Engine cooling system.
89.330 Lubricating oil and test fuels.
89.331 Test conditions.

APPENDIX A TO SUBPART D—TABLES
APPENDIX B TO SUBPART D—FIGURES

Subpart E—Exhaust Emission Test Procedures

89.401 Scope; applicability.
89.402 Definitions.
89.403 Symbols/abbreviations.
89.404 Test procedure overview.
89.405 Recorded information.
89.406 Pre-test procedures.
89.407 Engine dynamometer test run.
89.408 Post-test procedures.
89.409 Data logging.
89.410 Engine test cycle.
89.411 Exhaust sample procedure—gaseous components.
89.412 Raw gaseous exhaust sampling and analytical system description.
89.413 Raw sampling procedures.
89.414 Air flow measurement specifications.
89.415 Fuel flow measurement specifications.
89.416 Raw exhaust gas flow.
89.417 Data evaluation for gaseous emissions.
89.418 Raw emission sampling calculations.
89.419 Dilute gaseous exhaust sampling and analytical system description.
89.420 Background sample.
89.421 Exhaust gas analytical system; CVS bag sample.
89.422 Dilute sampling procedures—CVS calibration.
89.423 [Reserved]
89.424 Dilute emission sampling calculations.
89.425 [Reserved]

APPENDIX A TO SUBPART E—FIGURES
APPENDIX B TO SUBPART E—TABLES 1

Subpart F—Selective Enforcement Auditing

89.501 Applicability.
89.502 Definitions.
89.503 Test orders.
89.504 Testing by the Administrator.
89.505 Maintenance of records; submittal of information.
89.506 Right of entry and access.
89.507 Sample selection.
89.508 Test procedures.
89.509 Calculation and reporting of test results.
89.510 Compliance with acceptable quality level and passing and failing criteria for selective enforcement audits.
89.511 Suspension and revocation of certificates of conformity.
89.512 Request for public hearing.
89.513 Administrative procedures for public hearing.
89.514 Hearing procedures.
89.515 Appeal of hearing decision.
89.516 Treatment of confidential information.
APPENDIX A TO SUBPART F—SAMPLING PLANS FOR SELECTIVE ENFORCEMENT AUDITING OF NONROAD ENGINES

Subpart G—Importation of Nonconforming Nonroad Engines

89.601 Applicability.
89.602 Definitions.
89.603 General requirements for importation of nonconforming nonroad engines.
89.604 Conditional admission.
89.605 Final admission of certified nonroad engines.
89.606 Inspection and testing of imported nonroad engines.
89.607 Maintenance of independent commercial importer's records.
89.608 ''In Use'' inspections and recall requirements.
89.609 Final admission of modification nonroad engines and test nonroad engines.
89.610 Maintenance instructions, warranties, emission labeling.
89.611 Exemptions and exclusions.
89.612 Prohibited acts; penalties.
89.613 Treatment of confidential information.

Subpart H—Recall Regulations

89.701 Applicability.
89.702 Definitions.
89.703 Applicability of part 85, subpart S.

Subpart I—Emission Defect Reporting Requirements

89.801 Applicability.
89.802 Definitions.
89.803 Applicability of part 85, subpart T.

Subpart J—Exemption Provisions

89.901 Applicability.
89.902 Definitions.
89.903 Application of section 216(10) of the Act.
89.904 Who may request an exemption.
89.905 Testing exemption.
89.906 Manufacturer-owned exemption and precertification exemption.
89.907 Display exemption.
89.908 National security exemption.
89.909 Export exemptions.
89.910 Granting of exemptions.
89.911 Submission of exemption requests.
89.912 Treatment of confidential information.
89.913 What provisions apply to engines certified under the motor-vehicle program?
89.914 What provisions apply to vehicles certified under the motor-vehicle program?
89.915 Staged-assembly exemption.
89.916 Emergency-vessel exemption for marine engines below 37 kW.

Subpart K—General Enforcement Provisions and Prohibited Acts

89.1001 Applicability.
89.1002 Definitions.
89.1003 Prohibited acts.
89.1004 General enforcement provisions.
89.1005 Injunction proceedings for prohibited acts.
89.1006 Penalties.
89.1007 Warranty provisions.
89.1008 In-use compliance provisions.
89.1009 What special provisions apply to branded engines?

AUTHORITY: 42 U.S.C. 7401–7671q.

SOURCE: 59 FR 31335, June 17, 1994, unless otherwise noted.

Subpart A—General

§89.1 Applicability.

(a) This part applies for all compression-ignition nonroad engines (see definition of ''nonroad engine'' in §89.2) except those specified in paragraph (b) of this section. This means that the engines for which this part applies include but are not limited to the following:

(1) Compression-ignition engines exempted from the requirements of 40 CFR part 92 by 40 CFR 92.907;

(2) Compression-ignition engines exempted from the requirements of 40 CFR part 94 by 40 CFR 94.907;

(3) Portable compression-ignition engines that are used in but not installed in marine vessels (as defined in the

General Provisions of the United States Code, 1 U.S.C. 3);

(4) Non-propulsion compression-ignition engines used in locomotives; and

(5) Compression-ignition marine engines with rated power under 37 kW.

(b) (1) *Aircraft engines*. This part does not apply for engines used in aircraft (as defined in 40 CFR 87.1).

(2) *Mining engines*. This part does not apply for engines used in underground mining equipment and regulated by the Mining Safety and Health Administration (MSHA) in 30 CFR parts 7, 31, 32, 36, 56, 57, 70, and 75.

(3) *Locomotive engines*. This part does not apply for engines that:

(i) Are subject to the standards of 40 CFR part 92; or

(ii) Are exempted from the requirements of 40 CFR part 92 by exemption provisions of 40 CFR part 92 other than those specified in 40 CFR 92.907.

(4) *Marine engines*. This part does not apply for engines that:

(i) Are subject to the standards of 40 CFR part 94;

(ii) Are exempted from the requirements of 40 CFR part 94 by exemption provisions of 40 CFR part 94 other than those specified in 40 CFR 94.907 or 94.912.

(iii) Are marine engines (as defined in 40 CFR part 94) with rated power at or above 37kW that are manufactured in calendar years in which the standards of 40 CFR part 94 are not yet applicable.

(5) *Hobby engines*. This part does not apply for engines installed in reduced-scale models of vehicles that are not capable of transporting a person.

(6) *Tier 4 engines*. This part does not apply to engines that are subject to emission standards under 40 CFR part 1039. See 40 CFR 1039.1 to determine when that part 1039 applies. Note that certain requirements and prohibitions apply to engines built on or after January 1, 2006 if they are installed in stationary applications or in equipment that will be used solely for competition, as described in 40 CFR 1039.1 and 40 CFR 1068.1; those provisions apply instead of the provisions of this part 89.

(c) In certain cases, the regulations in this part 89 apply to engines at or above 250 kW that would otherwise be covered by 40 CFR part 1048. See 40 CFR 1048.620 for provisions related to this allowance.

(d) This part applies as specified in 40 CFR part 60 subpart IIII, to compression-ignition engines subject to the standards of 40 CFR part 60, subpart IIII.

[64 FR 73330, Dec. 29, 1999, as amended at 69 FR 39212, June 29, 2004; 70 FR 40444, July 13, 2005; 71 FR 39184, July 11, 2006; 72 FR 53126, Sept. 18, 2007; 74 FR 8423, Feb. 24, 2009]

§ 89.2 Definitions.

The following definitions apply to part 89. All terms not defined herein have the meaning given them in the Act.

Act means the Clean Air Act, as amended, 42 U.S.C. 7401 *et seq*.

Adjustable parameter means any device, system, or element of design which is physically capable of being adjusted (including those which are difficult to access) and which, if adjusted, may affect emissions or engine performance during emission testing.

Administrator means the Administrator of the Environmental Protection Agency or his or her authorized representative.

Aircraft means any vehicle capable of sustained air travel above treetop heights.

Amphibious vehicle means a vehicle with wheels or tracks that is designed primarily for operation on land and secondarily for operation in water.

Auxiliary emission control device (AECD) means any element of design that senses temperature, vehicle speed, engine RPM, transmission gear, or any other parameter for the purpose of activating, modulating, delaying, or deactivating the operation of any part of the emission control system.

Auxiliary marine diesel engine means a marine diesel engine that is not a propulsion marine diesel engine.

Blue Sky Series engine means a nonroad engine meeting the requirements of § 89.112(f).

Certification means, with respect to new nonroad engines, obtaining a certificate of conformity for an engine family complying with the nonroad engine emission standards and requirements specified in this part.

Compression-ignition means relating to a type of reciprocating, internal-

combustion engine that is not a spark-ignition engine.

Constant-speed engine means an engine that is governed to operate only at rated speed.

Crankcase emissions means airborne substances emitted to the atmosphere from any portion of the engine crankcase ventilation or lubrication systems.

Designated Enforcement Officer means the Director, Air Enforcement Division (2242A), U.S. Environmental Protection Agency, 1200 Pennsylvania Ave., NW.,Washington, DC 20460.

Emission control system means any device, system, or element of design which controls or reduces the emission of substances from an engine.

Engine, as used in this part, refers to nonroad engine.

Engine manufacturer means any person engaged in the manufacturing or assembling of new nonroad engines or importing such engines for resale, or who acts for and is under the control of any such person in connection with the distribution of such engines. Engine manufacturer does not include any dealer with respect to new nonroad engines received by such person in commerce.

Engine used in a locomotive means either an engine placed in the locomotive to move other equipment, freight, or passenger traffic, or an engine mounted on the locomotive to provide auxiliary power.

EPA enforcement officer means any officer or employee of the Environmental Protection Agency so designated in writing by the Administrator (or by his or her designee).

Exhaust gas recirculation means an emission control technology that reduces emissions by routing exhaust gases that had been exhausted from the combustion chamber(s) back into the engine to be mixed with incoming air prior to or during combustion. The use of valve timing to increase the amount of residual exhaust gas in the combustion chamber(s) that is mixed with incoming air prior to or during combustion is not considered to be exhaust gas recirculation for the purposes of this part.

Family emission limit (FEL) means an emission level that is declared by the manufacturer to serve in lieu of an emission standard for certification purposes and for the averaging, banking, and trading program. A FEL must be expressed to the same number of decimal places as the applicable emission standard.

Full load governed speed is the maximum full load speed as specified by the manufacturer in the sales and service literature and certification application. This speed is the highest engine speed with an advertised power greater than zero.

Gross power means the power measured at the crankshaft or its equivalent, the engine being equipped only with the standard accessories (such as oil pumps, coolant pumps, and so forth) necessary for its operation on the test bed. Alternators must be used, if necessary, to run the engine. Fans, air conditioners, and other accessories may be used at the discretion of the manufacturer, but no power adjustments for these accessories may be made.

Identification number means a specification (for example, model number/serial number combination) which allows a particular nonroad engine to be distinguished from other similar engines.

Intermediate speed means peak torque speed if peak torque speed occurs from 60 to 75 percent of rated speed. If peak torque speed is less than 60 percent of rated speed, intermediate speed means 60 percent of rated speed. If peak torque speed is greater than 75 percent of rated speed, intermediate speed means 75 percent of rated speed.

Marine engine means a nonroad engine that is installed or intended to be installed on a marine vessel. This includes a portable auxiliary marine engine only if its fueling, cooling, or exhaust system is an integral part of the vessel. There are two kinds of marine engines:

(1) Propulsion marine engine means a marine engine that moves a vessel through the water or directs the vessel's movement.

(2) Auxiliary marine engine means a marine engine not used for propulsion.

Marine vessel has the meaning given in 1 U.S.C. 3, except that it does not include amphibious vehicles. The definition in 1 U.S.C. 3 very broadly includes every craft capable of being used as a means of transportation on water.

Model year (MY) means the manufacturer's annual new model production period which includes January 1 of the calendar year, ends no later than December 31 of the calendar year, and does not begin earlier than January 2 of the previous calendar year. Where a manufacturer has no annual new model production period, model year means calendar year.

New for purposes of this part, means a nonroad engine, nonroad vehicle, or nonroad equipment the equitable or legal title to which has never been transferred to an ultimate purchaser. Where the equitable or legal title to the engine, vehicle, or equipment is not transferred to an ultimate purchaser until after the engine, vehicle, or equipment is placed into service, then the engine, vehicle, or equipment will no longer be new after it is placed into service. A nonroad engine, vehicle, or equipment is placed into service when it is used for its functional purposes. With respect to imported nonroad engines, nonroad vehicles, or nonroad equipment, the term *new* means an engine, vehicle, or piece of equipment that is not covered by a certificate of conformity issued under this part at the time of importation, and that is manufactured after the effective date of a regulation issued under this part which is applicable to such engine, vehicle, or equipment (or which would be applicable to such engine, vehicle, or equipment had it been manufactured for importation into the United States).

Nonroad engine means:

(1) Except as discussed in paragraph (2) of this definition, a nonroad engine is any internal combustion engine:

(i) In or on a piece of equipment that is self-propelled or serves a dual purpose by both propelling itself and performing another function (such as garden tractors, off-highway mobile cranes and bulldozers); or

(ii) In or on a piece of equipment that is intended to be propelled while performing its function (such as lawnmowers and string trimmers); or

(iii) That, by itself or in or on a piece of equipment, is portable or transportable, meaning designed to be and capable of being carried or moved from one location to another. Indicia of transportability include, but are not limited to, wheels, skids, carrying handles, dolly, trailer, or platform.

(2) An internal combustion engine is not a nonroad engine if:

(i) the engine is used to propel a motor vehicle or a vehicle used solely for competition, or is subject to standards promulgated under section 202 of the Act; or

(ii) the engine is regulated by a federal New Source Performance Standard promulgated under section 111 of the Act; or

(iii) the engine otherwise included in paragraph (1)(iii) of this definition remains or will remain at a location for more than 12 consecutive months or a shorter period of time for an engine located at a seasonal source. A location is any single site at a building, structure, facility, or installation. Any engine (or engines) that replaces an engine at a location and that is intended to perform the same or similar function as the engine replaced will be included in calculating the consecutive time period. An engine located at a seasonal source is an engine that remains at a seasonal source during the full annual operating period of the seasonal source. A seasonal source is a stationary source that remains in a single location on a permanent basis (i.e., at least two years) and that operates at that single location approximately three months (or more) each year. This paragraph does not apply to an engine after the engine is removed from the location.

Nonroad equipment means equipment that is powered by nonroad engines.

Nonroad vehicle means a vehicle that is powered by a nonroad engine as defined in this section and that is not a motor vehicle or a vehicle used solely for competition.

Nonroad vehicle or nonroad equipment manufacturer means any person engaged in the manufacturing or assembling of new nonroad vehicles or equipment or importing such vehicles or

equipment for resale, or who acts for and is under the control of any such person in connection with the distribution of such vehicles or equipment. A nonroad vehicle or equipment manufacturer does not include any dealer with respect to new nonroad vehicles or equipment received by such person in commerce. A nonroad vehicle or equipment manufacturer does not include any person engaged in the manufacturing or assembling of new nonroad vehicles or equipment who does not install an engine as part of that manufacturing or assembling process. All nonroad vehicle or equipment manufacturing entities that are under the control of the same person are considered to be a single nonroad vehicle or nonroad equipment manufacturer.

Opacity means the fraction of a beam of light, expressed in percent, which fails to penetrate a plume of smoke.

Operating hours means:

(1) For engine storage areas or facilities, all times during which personnel other than custodial personnel are at work in the vicinity of the storage area or facility and have access to it.

(2) For all other areas or facilities, all times during which an assembly line is in operation or all times during which testing, maintenance, service accumulation, production or compilation of records, or any other procedure or activity related to certification testing, to translation of designs from the test stage to the production stage, or to engine manufacture or assembly is being carried out in a facility.

Post-manufacture marinizer means a person who produces a marine diesel engine by substantially modifying a certified or uncertified complete or partially complete engine, and is not controlled by the manufacturer of the base engine or by an entity that also controls the manufacturer of the base engine. For the purpose of this definition, ''substantially modify'' means changing an engine in a way that could change engine emission characteristics.

Presentation of credentials means the display of the document designating a person as an EPA enforcement officer or EPA authorized representative.

Propulsion marine diesel engine means a marine diesel engine that is intended to move a vessel through the water or direct the movement of a vessel.

Rated speed is the maximum full load governed speed for governed engines and the speed of maximum horsepower for ungoverned engines.

Spark-ignition means relating to a gasoline-fueled engine or other engines with a spark plug (or other sparking device) and with operating characteristics significantly similar to the theoretical Otto combustion cycle. Spark-ignition engines usually use a throttle to regulate intake air flow to control power during normal operation.

Specific emissions means emissions expressed on the basis of observed brake power, using units of g/kW-hr. Observed brake power measurement includes accessories on the engine if these accessories are required for running an emission test (except for the cooling fan). When it is not possible to test the engine in the gross conditions, for example, if the engine and transmission form a single integral unit, the engine may be tested in the net condition. Power corrections from net to gross conditions will be allowed with prior approval of the Administrator.

Sulfur-sensitive technology means an emission-control technology that experiences a significant drop in emission-control performance or emission-system durability when an engine is operated on low-sulfur fuel (*i.e.*, fuel with a sulfur concentration up to 500 ppm) as compared to when it is operated on ultra low-sulfur fuel (*i.e.*, fuel with a sulfur concentration less than 15 ppm). Exhaust-gas recirculation is not a sulfur-sensitive technology.

Test fleet means the engine or group of engines that a manufacturer uses during certification to determine compliance with emission standards.

Tier 1 engine means an engine subject to the Tier 1 emission standards listed in § 89.112(a).

Tier 2 engine means an engine subject to the Tier 2 emission standards listed in § 89.112(a).

Tier 3 engine means an engine subject to the Tier 3 emission standards listed in § 89.112(a).

Ultimate purchaser means, with respect to any new nonroad engine, new nonroad vehicle, or new nonroad equipment, the first person who in good

faith purchases such new nonroad engine, nonroad vehicle, or nonroad equipment for purposes other than resale.

United States means the States, the District of Columbia, the Commonwealth of Puerto Rico, the Commonwealth of the Northern Mariana Islands, Guam, American Samoa, and the U.S. Virgin Islands.

Used solely for competition means exhibiting features that are not easily removed and that would render its use other than in competition unsafe, impractical, or highly unlikely.

U.S.-directed production volume means the number of nonroad equipment, vehicle, or marine diesel engine units produced by a manufacturer for which the manufacturer has reasonable assurance that sale was or will be made to ultimate purchasers in the United States.

[59 FR 31335, June 17, 1994, as amended at 61 FR 52102, Oct. 4, 1996; 63 FR 18998, Apr. 16, 1998; 63 FR 56996, Oct. 23, 1998; 65 FR 73331, Dec. 29, 1999; 67 FR 68339, Nov. 8, 2002; 69 FR 39212, June 29, 2004; 70 FR 40444, July 13, 2005; 72 FR 53126, Sept. 18, 2007]

§ 89.3 Acronyms and abbreviations.

The following acronyms and abbreviations apply to part 89.

AECD Auxiliary emission control device
ASME American Society of Mechanical Engineers
ASTM American Society for Testing and Materials
CAA Clean Air Act
CAAA Clean Air Act Amendments of 1990
CI Compression-ignition
CO Carbon monoxide
CO_2 Carbon dioxide
EGR Exhaust gas recirculation
EPA Environmental Protection Agency
FEL Family emission limit
FTP Federal Test Procedure
g/kW-hr Grams per kilowatt hour
HC Hydrocarbons
ICI Independent Commercial Importer
kW Kilowatt
NIST National Institute for Standards and Testing
NMHC Nonmethane hydrocarbon
NTIS National Technical Information Service
NO Nitric oxide
NO_2 Nitrogen dioxide
NO_x Oxides of nitrogen
O_2 Oxygen
OEM Original equipment manufacturer
PM Particulate matter
SAE Society of Automotive Engineers
SEA Selective Enforcement Auditing
SI Spark-ignition
THC Total hydrocarbon
U.S.C. United States Code
VOC Volatile organic compounds

[59 FR 31335, June 17, 1994, as amended at 63 FR 56997, Oct. 23, 1998]

§ 89.4 [Reserved]

§ 89.5 Table and figure numbering; position.

(a) Tables for each subpart appear in an appendix at the end of the subpart. Tables are numbered consecutively by order of appearance in the appendix. The table title will indicate the model year (if applicable) and the topic.

(b) Figures for each subpart appear in an appendix at the end of the subpart. Figures are numbered consecutively by order of appearance in the appendix. The figure title will indicate the model year (if applicable) and the topic.

§ 89.6 Reference materials.

The materials listed in this section are incorporated by reference into this part with the approval of the Director of the Federal Register under 5 U.S.C. 552(a) and 1 CFR part 51. To enforce any edition other than that specified in this section, a document must be published in the FEDERAL REGISTER and the material must be available to the public. All approved materials are available for inspection at the Air and Radiation Docket and Information Center (Air Docket) in the EPA Docket Center (EPA/DC) at Rm. 3334, EPA West Bldg., 1301 Constitution Ave., NW., Washington, DC. The EPA/DC Public Reading Room hours of operation are 8:30 a.m. to 4:30 p.m., Monday through Friday, excluding legal holidays. The telephone number of the EPA/DC Public Reading Room is (202) 566–1744, and the telephone number for the Air Docket is (202) 566–1742. These approved materials are also available for inspection at the National Archives and Records Administration (NARA). For information on the availability of this material at NARA, call (202) 741–6030 or go to *http://www.archives.gov/federal_register/code_of_federal_regulations/ibr_locations.html*. In addition, these

materials are available from the sources listed below.

(a) *ASTM material.* Copies of these materials may be obtained from ASTM International, 100 Barr Harbor Dr., P.O. Box C700, West Conshohocken, PA 19428–2959, or by calling (877) 909–ASTM, or at *http://www.astm.org.*

(1) ASTM D86–97, Standard Test Method for Distillation of Petroleum Products at Atmospheric Pressure, IBR approved for appendix A to subpart D.

(2) ASTM D93–09 (Approved December 15, 2009), Standard Test Methods for Flash Point by Pensky-Martens Closed Cup Tester, IBR approved for appendix A to subpart D.

(3) ASTM D129–95, Standard Test Method for Sulfur in Petroleum Products (General Bomb Method), IBR approved for appendix A to subpart D.

(4) ASTM D287–92, Standard Test Method for API Gravity of Crude Petroleum and Petroleum Products (Hydrometer Method), IBR approved for appendix A to subpart D.

(5) ASTM D445–09 (Approved July 1, 2009), Standard Test Method for Kinematic Viscosity of Transparent and Opaque Liquids (the Calculation of Dynamic Viscosity), IBR approved for appendix A to subpart D.

(6) ASTM D613–95, Standard Test Method for Cetane Number of Diesel Fuel Oil, IBR approved for appendix A to subpart D.

(7) ASTM D1319–98, Standard Test Method for Hydrocarbon Types in Liquid Petroleum Products by Fluorescent Indicator Adsorption, IBR approved for appendix A to subpart D.

(8) ASTM D2622–98, Standard Test Method for Sulfur in Petroleum Products by Wavelength Dispersive X-ray Fluorescence Spectrometry, IBR approved for appendix A to subpart D.

(9) ASTM D5186–96, Standard Test Method for ''Determination of the Aromatic Content and Polynuclear Aromatic Content of Diesel Fuels and Aviation Turbine Fuels By Supercritical Fluid Chromatography, IBR approved for appendix A to subpart D.

(10) ASTM E29–93a, Standard Practice for Using Significant Digits in Test Data to Determine Conformance with Specifications, IBR approved for §§ 89.120, 89.207, 89.509.

(b) *California Air Resources Board Test Procedure.* The material is from Title 13, California Code of Regulations, Sections 2420–2427, as amended by California Air Resources Board Resolution 92–2 and published in California Air Resources Board mail out #93–42, September 1, 1993. Copies of these materials may be obtained from the California Air Resources Board, Haagen-Smit Laboratory, 9528 Telstar Ave., El Monte, CA 91731–2908, or by calling (800) 242–4450.

(1) California Regulations for New 1996 and Later Heavy-Duty Off-Road Diesel Cycle Engines, IBR approved for §§ 89.112, 89.119, 89.508.

(2) [Reserved]

(c) *SAE material.* Copies of these materials may be obtained from the Society of Automotive Engineers International, 400 Commonwealth Dr., Warrendale, PA 15096–0001, or by calling (877) 606–7323 (United States and Canada only) or (724) 776–4970 (outside the United States and Canada only), or at *http://www.sae.org.*

(1) SAE J244, June 83, Recommended Practice for Measurement of Intake Air or Exhaust Gas Flow of Diesel Engines, IBR approved for § 89.416.

(2) SAE J1937, November 89, Recommended Practice for Engine Testing with Low Temperature Charge Air Cooler Systems in a Dynamometer Test Cell, IBR approved for § 89.327.

(3) SAE Paper 770141, 1977, Optimization of a Flame Ionization Detector for Determination of Hydrocarbon in Diluted Automotive Exhausts, Glenn D. Reschke, IBR approved for § 89.319.

[77 FR 2461, Jan. 18, 2012]

§ 89.7 Treatment of confidential information.

(a) Any manufacturer may assert that some or all of the information submitted pursuant to this part is entitled to confidential treatment as provided by part 2, subpart B of this chapter.

(b) Any claim of confidentiality must accompany the information at the time it is submitted to EPA.

(c) To assert that information submitted pursuant to this part is confidential, a manufacturer must indicate clearly the items of information

claimed confidential by marking, circling, bracketing, stamping, or otherwise specifying the confidential information. Furthermore, EPA requests, but does not require, that the submitter also provide a second copy of its submittal from which all confidential information has been deleted. If a need arises to publicly release nonconfidential information, EPA will assume that the submitter has accurately deleted the confidential information from this second copy.

(d) If a claim is made that some or all of the information submitted pursuant to this part is entitled to confidential treatment, the information covered by that confidentiality claim will be disclosed by the Administrator only to the extent and by means of the procedures set forth in part 2, subpart B of this chapter.

(e) Information provided without a claim of confidentiality at the time of submission may be made available to the public by EPA without further notice to the submitter, in accordance with §2.204(c)(2)(i)(A) of this chapter.

APPENDIX A TO SUBPART A OF PART 89—STATE REGULATION OF NONROAD INTERNAL COMBUSTION ENGINES

This appendix sets forth the Environmental Protection Agency's (EPA's) interpretation of the Clean Air Act regarding the authority of states to regulate the use and operation of nonroad engines.

EPA believes that states are not precluded under section 209 from regulating the use and operation of nonroad engines, such as regulations on hours of usage, daily mass emission limits, or sulfur limits on fuel; nor are permits regulating such operations precluded, once the engine is no longer new. EPA believes that states are precluded from requiring retrofitting of used nonroad engines except that states are permitted to adopt and enforce any such retrofitting requirements identical to California requirements which have been authorized by EPA under section 209 of the Clean Air Act.

[62 FR 67736, Dec. 30, 1997]

Subpart B—Emission Standards and Certification Provisions

§89.101 Applicability.

(a) The requirements of subpart B of this part are applicable to all new nonroad compression-ignition engines subject to the provisions of subpart A of this part 89, pursuant to the schedule delineated in §89.102.

(b) In a given model year, you may ask us to approve the use of procedures for certification, labeling, reporting, and recordkeeping specified in 40 CFR part 1039 or 1068 instead of the comparable procedures specified in this part 89. We will approve the request as long as it does not prevent us from ensuring that you fully comply with the intent of this part.

[72 FR 53127, Sept. 18, 2007]

§89.102 Effective dates, optional inclusion, flexibility for equipment manufacturers.

(a) This subpart applies to all engines described in §89.101 with the following power rating and manufactured after the following dates:

(1) Less than 19 kW and manufactured on or after January 1, 2000;

(2) Greater than or equal to 19 kW but less than 37 kW and manufactured on or after January 1, 1999;

(3) Greater than or equal to 37 kW but less than 75 kW and manufactured on or after January 1, 1998;

(4) Greater than or equal to 75 kW but less than 130 kW and manufactured on or after January 1, 1997;

(5) Greater than or equal to 130 kW but less than or equal to 560 kW and manufactured on or after January 1, 1996;

(6) Greater than 560 kW and manufactured on or after January 1, 2000.

(b) A manufacturer can optionally certify engines manufactured up to one calendar year prior to the effective date of mandatory certification to earn emission credits under the averaging, banking, and trading program. Such optionally certified engines are subject to all provisions relating to mandatory certification and enforcement described in this part.

(c) Engines meeting the voluntary standards described in §89.112(f) may be designated as Blue Sky Series engines through the 2004 model year.

(d) *Implementation flexibility for equipment and vehicle manufacturers and post-manufacture marinizers.* Nonroad equipment and vehicle manufacturers and post-manufacture marinizers may take any of the otherwise prohibited actions

identified in § 89.1003(a)(1) and (b)(4) with respect to nonroad equipment and vehicles and marine diesel engines, subject to the requirements of paragraph (e) of this section. The following allowances apply separately to each engine power category subject to standards under § 89.112:

(1) *Percent-of-production allowances.* (i) *Equipment rated at or above 37 kW.* For nonroad equipment and vehicles with engines rated at or above 37 kW, a manufacturer may take any of the actions identified in § 89.1003(a)(1) for a portion of its U.S.-directed production volume of such equipment and vehicles during the seven years immediately following the date on which Tier 2 engine standards first apply to engines used in such equipment and vehicles, provided that the seven-year sum of these portions in each year, as expressed as a percentage for each year, does not exceed 80, and provided that all such equipment and vehicles or equipment contain Tier 1 or Tier 2 engines;

(ii) *Equipment rated under 37 kW.* For nonroad equipment and vehicles and marine diesel engines with engines rated under 37 kW, a manufacturer may take any of the actions identified in § 89.1003(a)(1) for a portion of its U.S.-directed production volume of such equipment and vehicles during the seven years immediately following the date on which Tier 1 engine standards first apply to engines used in such equipment and vehicles, provided that the seven-year sum of these portions in each year, as expressed as a percentage for each year, does not exceed 80.

(2) *Small volume allowances.* A nonroad equipment or vehicle manufacturer or post-manufacture marinizer may exceed the production percentages in paragraph (d)(1) of this section, provided that in each regulated power category the manufacturer's total of excepted nonroad equipment and vehicles and marine diesel engines:

(i) Over the years in which the percent-of-production allowance applies does not exceed 100 units times the number of years in which the percent-of-production allowance applies; and

(ii) Does not exceed 200 units in any year; and

(iii) Does not use engines from more than one engine family, or, for excepted equipment vehicles, and marine diesel engines using engines not belonging to any engine family, from more than one engine manufacturer. For purposes of this paragraph (d)(2)(iii), engine family refers to engines that have common characteristics as described in § 89.116.

(3) *Inclusion of previous-tier engines.* Nonroad equipment and vehicles and marine diesel engines built with previous tier or noncertified engines under the existing inventory provisions of § 89.1003(b)(4) need not be included in determining compliance with paragraphs (d)(1) and (d)(2) of this section.

(e) *Recordkeeping and calculation to verify compliance.* The following shall apply to nonroad equipment or vehicle manufacturers and post-manufacture marinizers who produce excepted equipment or vehicles or marine diesel engines under the provisions of paragraph (d) of this section:

(1) For each power category in which excepted nonroad equipment or vehicles or marine diesel engines are produced, a calculation to verify compliance with the requirements of paragraph (d) of this section shall be made by the nonroad equipment or vehicle manufacturer or post-manufacture marinizer. This calculation shall be made no later than December 31 of the year following the last year in which allowances are used, and shall be based on actual production information from the subject years. If both the percent-of-production and small volume allowances have been exceeded, then the manufacturer is in violation of section 203 of the Act and § 89.1003, except as provided under paragraphs (f) and (h) of this section.

(2) A nonroad equipment or vehicle manufacturer or post-manufacture marinizer shall keep records of all nonroad equipment and vehicles and marine diesel engines excepted under the provisions of paragraph (d) of this section, for each power category in which exceptions are taken. These records shall include equipment and engine model numbers, serial numbers, and dates of manufacture, and engine rated power. In addition, the manufacturer shall keep records sufficient to

demonstrate the verifications of compliance required in paragraph (e)(1) of this section. All records shall be kept until at least two full years after the final year in which allowances are available for each power category, and shall be made available to EPA upon request.

(f) *Hardship relief.* Nonroad equipment and vehicle manufacturers and post-manufacture marinizers may take any of the otherwise prohibited actions identified in § 89.1003(a)(1) if approved by the Administrator, and subject to the following requirements:

(1) Application for relief must be submitted to the Engine Programs and Compliance Division of the EPA in writing prior to the earliest date in which the applying manufacturer would be in violation of § 89.1003. The manufacturer must submit evidence showing that the requirements for approval have been met.

(2) The applying manufacturer must not be the manufacturer of the engines used in the equipment for which relief is sought. This requirement does not apply to post-manufacture marinizers.

(3) The conditions causing the impending violation must not be substantially the fault of the applying manufacturer.

(4) The conditions causing the impending violation must be such that the applying manufacturer will experience serious economic hardship if relief is not granted.

(5) The applying manufacturer must demonstrate that no allowances under paragraph (d) of this section will be available to avoid the impending violation.

(6) Any relief granted must begin within one year after the implementation date of the standard applying to the engines being used in the equipment, or to the marine diesel engines, for which relief is requested, and may not exceed one year in duration.

(7) The Administrator may impose other conditions on the granting of relief including provisions to recover the lost environmental benefit.

(g) *Allowance for the production of engines.* Engine manufacturers may take any of the otherwise prohibited actions identified in § 89.1003(a)(1) with regard to uncertified engines, Tier 1 engines, or Tier 2 engines, as appropriate, if the engine manufacturer has received written assurance from the equipment manufacturer that the engine is required to meet the demand for engines created under paragraph (d), (f), or (h) of this section.

(h) *Alternative Flexibility for Post-Manufacture Marinizers.* Post-manufacture marinizers may elect to delay the effective date of the Tier 1 standards in § 89.112 for marine diesel engines rated under 37 kW by one year, instead of using the provisions of paragraphs (d) and (f) of this section. Post-manufacture marinizers wishing to take advantage of this provision must inform the Director of the Engine Programs and Compliance Division of their intent to do so in writing before the date that the standards would otherwise take effect.

(i) *Additional exemptions for technical or engineering hardship.* You may request additional engine allowances under paragraph (d)(1) of this section for 56–560 kW power categories or, if you are a small equipment manufacturer, under paragraph (d)(2) of this section for engines at or above 37 and below 75 kW. However, you may use these extra allowances only for those equipment models for which you, or an affiliated company, do not also produce the engine. After considering the circumstances, we may permit you to introduce into U.S. commerce equipment with such engines that do not comply with Tier 3 emission standards, as follows:

(1) We may approve additional exemptions if extreme and unusual circumstances that are clearly outside your control and that could not have been avoided with reasonable discretion have resulted in technical or engineering problems that prevent you from meeting the requirements of this part. You must show that you exercised prudent planning and have taken all reasonable steps to minimize the scope of your request for additional allowances.

(2) To apply for exemptions under this paragraph (i), send the Designated Compliance Officer and the Designated Enforcement Officer a written request as soon as possible before you are in

violation. In your request, include the following information:

(i) Describe your process for designing equipment.

(ii) Describe how you normally work cooperatively or concurrently with your engine supplier to design products.

(iii) Describe the engineering or technical problems causing you to request the exemption and explain why you have not been able to solve them. Describe the extreme and unusual circumstances that led to these problems and explain how they were unavoidable.

(iv) Describe any information or products you received from your engine supplier related to equipment design—such as written specifications, performance data, or prototype engines—and when you received it.

(v) Compare the design processes of the equipment model for which you need additional exemptions and that for other models for which you do not need additional exemptions. Explain the technical differences that justify your request.

(vi) Describe your efforts to find and use other compliant engines, or otherwise explain why none is available.

(vii) Describe the steps you have taken to minimize the scope of your request.

(viii) Include other relevant information. You must give us other relevant information if we ask for it.

(ix) Estimate the increased percent of production you need for each equipment model covered by your request, as described in paragraph (i)(3) of this section. Estimate the increased number of allowances you need for each equipment model covered by your request, as described in paragraph (i)(4) of this section.

(3) We may approve your request to increase the allowances under paragraph (d)(1) of this section, subject to the following limitations:

(i) The additional allowances will not exceed 50 percent for each power category.

(ii) You must use up the allowances under paragraph (d)(1) of this section before using any additional allowance under this paragraph (i).

(iii) Any allowances we approve under this paragraph (i)(3) expire 24 months after the provisions of this section start for a given power category. You may use these allowances only for the specific equipment models covered by your request.

(4) We may approve your request to increase the allowances for the 37–75 kW power category under paragraph (d)(2) of this section, subject to the following limitations:

(i) You are eligible for additional allowances under this paragraph (i)(4) only if you are a small equipment manufacturer and you do not use the provisions of paragraph (i)(3) of this section to obtain additional allowances for the 37–75 kW power category.

(ii) You must use up all the available allowances for the 37–75 kW power category under paragraph (d)(2) of this section in a given year before using any additional allowances under this paragraph (i)(4).

(iii) Base your request only on equipment you produce with engines at or above 37 kW and below 75 kW. You may use any additional allowances only for equipment you produce with engines at or above 37 kW and below 75 kW.

(iv) Any allowances we approve under this paragraph (i)(4) expire 24 months after the provisions of this section start for this power category. These additional allowances are not subject to the annual limits specified in paragraph (d)(2) of this section. You may use these allowances only for the specific equipment models covered by your request.

(v) The total allowances under paragraph (d)(2) of this section for the 37–75 kW power category will not exceed 700 units. The total allowances under this paragraph (i)(4) follow the requirements under paragraph (d)(2) of this section for the 37–75 kW power category and will not exceed 200 units. Therefore, the total maximum allowances for the 37–75 kW power category will not exceed 900 units.

(5) For purposes of this paragraph (i), small equipment manufacturer means an equipment manufacturer that had annual U.S.-directed production volume of equipment using nonroad diesel engines between 37 and 75 kW of no more than 3,000 units in 2002 and all

earlier calendar years, and has 750 or fewer employees (500 or fewer employees for nonroad equipment manufacturers that produce no construction equipment or industrial trucks). For manufacturers owned by a parent company, the production limit applies to the production of the parent company and all its subsidiaries and the employee limit applies to the total number of employees of the parent company and all its subsidiaries.

(6) The following provisions for adjusted flexibilities for Tier 4 engines apply to equipment manufacturers that are granted additional exemptions for technical or engineering hardship:

(i) If you use the additional allowance under this paragraph (i) you shall forfeit percent of production flexibility plus technical or engineering hardship exemptions available for Tier 4 engines in the amounts shown in Table 1 of this section.

(ii) Table 1 of this section shows the percent of production flexibility and technical or engineering hardship exemptions that you must forfeit for Tier 4 engines. The amount of Tier 4 flexibility forfeited by each equipment manufacturer depends on the percent of production flexibility used for Tier 2 engines and the technical or engineering hardship exemptions granted for Tier 3 engines in the proportions shown in Table 1. For example, if you used 45 percent of your production flexibility for Tier 2 engines, you must forfeit 2 percent of your production flexibility for Tier 4 engines for every 1 percent of technical or engineering hardship flexibility granted for Tier 3 engines. In addition you must also forfeit 1 percent of any technical or engineering hardship exemptions available for Tier 4 engines for every 1 percent technical or engineering hardship exemptions available for Tier 3 engines. If you use the Tier 3 technical or engineering hardship allowances for 5 percent of your equipment in each of two different years, you have used a total allowance of 10 percent. Therefore you must forfeit a total of 20 percent of production flexibility for Tier 4 engines plus 10 percent of any technical or engineering hardship exemptions available for Tier 4 engines.

TABLE 1 OF § 89.102—ADJUSTMENTS TO TIER 4 FLEXIBILITIES

Percent of use Tier 2 production flexibility	Percent of forfeit Tier 4 production flexibility	Percent of forfeit Tier 4 tech./eng. exemption
Greater than 0% and up to 20%	0	1
Greater than 20% and up to 40%	1	1
Greater than 40% and up to 60%	2	1
Greater than 60% and up to 80%	3	1

(iii) Because the Tier 3 and Tier 4 rules have different power category ranges, the availability of technical relief will be further adjusted based on the sales volume by power category. Table 2 of this section shows the applicable power categories for Tier 3 and Tier 4. The Tier 3 power categories of 37kW to 75kW and 75kW to 130kW correspond to the Tier 4 power category of 56kW to 130kW. For the Tier 3 equipment in the 37 to 75kW category, you must only use the sales volume for equipment that uses engines with a rated power greater than 56kW. For example, if you have a Tier 3 piece of equipment that uses a 40 kW engine, the sales of the equipment are counted in the Tier 4 power category of 19kW to 56kW. If you have a Tier 3 piece of equipment that uses a 60kW engine, the sales of the equipment are counted in the Tier 4 power category of 56kW to 130kW. The Tier 3 power categories of 130kW to 225kW, 225kW to 450kW and 450kW to 560kW correspond to the Tier 4 power category of 130kW to 560kW. You will need to sum the sales of the Tier 3 power categories that correspond to the Tier 4 power category during each calendar year in which Tier 3 technical relief is used. The sum of all the Tier 3 units that are produced and exempted by the technical relief divided by the sum of all the Tier 3 units sold in the corresponding Tier 4 power category will determine the percentage of Tier 4 flexibility affected. For example, if you produce 50 units using Tier 3 technical relief in the range of 130kW to 225kW, and you produce 50 units using Tier 3 technical relief in the range of 225 to 450kW, and no units are produced in the 450kW to 560kW range, and your overall sales volume for the power ranges of 130kW to 560kW in Tier

3 is 400 units, the amount of Tier 3 technical relief used is 100/400 or 25 percent. Because you forfeit 1 percent of your Tier 4 technical relief for every 1 percent of Tier 3 technical relief used, then you will lose 25 percent of your Tier 4 technical relief in the 130kW to 560kW power range category. If you used 45 percent of your production flexibility for Tier 2 engines, you must forfeit 2 percent of production flexibility for Tier 4 engines for every 1 percent of Tier 3 technical relief. Therefore, you will forfeit 50 percent of your Tier 4 production allowance in the 130kW to 560kW power range category.

TABLE 2 OF § 89.102—CORRESPONDING TIER 3 AND TIER 4 POWER CATEGORIES

Tier 3 power categories	Tier 4 power categories
37≤kW<75*	19≤kW<56
37≤kW<75**, 75≤kW<130	56≤kW<130
130≤kW<225, 225≤kW<450, 450≤kW<560.	130≤kW≤560

* Applies only to use of engines rated between 37kW and 56kW by small volume equipment manufacturers.

** Includes only equipment that uses engines with a rated power greater than 56kw.

(iv) Manufacturers using allowances under this paragraph (i) must comply with the notification and reporting requirements specified in paragraph (i)(7) of this section.

(7) Notification and reporting. You must notify us of your intent to use the technical relief provisions of this paragraph (i) and send us an annual report to verify that you are not exceeding the allowances, as follows:

(i) Before the first year you intend to use the provisions of this section, send the Designated Compliance Officer and the Designated Enforcement Officer a written notice of your intent, including:

(A) Your company's name and address, and your parent company's name and address, if applicable.

(B) Whom to contact for more information.

(C) The calendar years in which you expect to use the exemption provisions of this section.

(D) The name and address of the company that produces the engines you will be using for the equipment exempted under this section.

(E) Your best estimate of the number of units in each power category you will produce under this section and whether you intend to comply under paragraph (d)(1) or (d)(2) of this section.

(F) The number of units in each power category you have sold in previous calendar years under paragraph (d) of this section.

(ii) For each year that you use the provisions of this section, send the Designated Compliance Officer and the Designated Enforcement Officer a written report by March 31 of the following year. Include in your report the total number of engines you sold in the preceding year for each power category, based on actual U.S.-directed production information. Also identify the percentages of U.S.-directed production that correspond to the number of units in each power category and the cumulative numbers and percentages of units for all the units you have sold under this section for each power category. You may omit the percentage figures if you include in the report a statement that you will not be using the percent-of-production allowances in paragraph (d) of this section.

(8) *Recordkeeping*. Keep the following records of all equipment with exempted engines you produce under this paragraph (i) for at least five full years after the final year in which allowances are available for each power category:

(i) The model number, serial number, and the date of manufacture for each engine and piece of equipment.

(ii) The maximum power of each engine.

(iii) The total number or percentage of equipment with exempted engines, as described in paragraph (d) of this section and all documentation supporting your calculation.

(iv) The notifications and reports we require under paragraph (i)(7) of this section.

(9) *Equipment Labeling*. Any engine produced under this paragraph (i) must meet the labeling requirements of 40 CFR 89.110, but add the following statement instead of the compliance statement in 40 CFR 89.110 (b)(10): THIS ENGINE MEETS U.S. EPA EMISSION STANDARDS UNDER 40 CFR 89.102.

SELLING OR INSTALLING THIS ENGINE FOR ANY PURPOSE OTHER THAN FOR THE EQUIPMENT FLEXIBILITY PROVISIONS OF 40 CFR 89.102 MAY BE A VIOLATION OF FEDERAL LAW SUBJECT TO CIVIL PENALTY.

(10) *Enforcement.* Producing more exempted engines or equipment than we allow under this paragraph (i) or installing engines that do not meet the applicable Tier 1 emission standards described in § 89.112 violates the prohibitions in § 89.1003(a)(1). You must give us the records we require under this paragraph (i) if we ask for them (*see* § 89.1003(a)(2)).

[59 FR 31335, June 17, 1994. Redesignated and amended at 63 FR 56995, 56997, Oct. 23, 1998; 70 FR 40444, July 13, 2005; 72 FR 53127, Sept. 18, 2007; 72 FR 72956, Dec. 26, 2007]

§ 89.103 Definitions.

The definitions in subpart A of part 89 apply to this subpart. All terms not defined herein or in subpart A have the meaning given them in the Act.

[59 FR 31335, June 17, 1994. Redesignated at 63 FR 56995, Oct. 23, 1998]

§ 89.104 Useful life, recall, and warranty periods.

(a) The useful life is based on the rated power and rated speed of the engine.

(1) For all engines rated under 19 kW, and for constant speed engines rated under 37 kW with rated speeds greater than or equal to 3,000 rpm, the useful life is a period of 3,000 hours or five years of use, whichever first occurs.

(2) For all other engines rated at or above 19 kW and under 37 kW, the useful life is a period of 5,000 hours or seven years of use, whichever first occurs.

(3) For all engines rated at or above 37 kW, the useful life is a period of 8,000 hours of operation or ten years of use, whichever first occurs.

(b) Engines are subject to recall testing for a period based on the rated power and rated speed of the engines. However, in a recall, engines in the subject class or category would be subject to recall regardless of actual years or hours of operation.

(1) For all engines rated under 19 kW, and for constant speed engines rated under 37 kW with rated speeds greater than or equal to 3,000 rpm, the engines are subject to recall testing for a period of 2,250 hours or four years of use, whichever first occurs.

(2) For all other engines rated at or above 19 kW and under 37 kW, the engines are subject to recall for a period of 3,750 hours or five years of use, whichever first occurs.

(3) For all engines rated at or above 37 kW, the engines are subject to recall for a period of 6,000 hours of operation or seven years of use, whichever first occurs.

(c) The warranty periods for warranties imposed by the Clean Air Act and § 89.1007 for all engines rated under 19 kW, and for constant speed engines rated under 37 kW with rated speeds greater than or equal to 3,000 rpm, are 1,500 hours of operation or two years of use, whichever first occurs. For all other engines, the warranty periods for warranties imposed by the Clean Air Act and § 89.1007 are 3,000 hours of operation or five years of use, whichever first occurs.

(d) Manufacturers may apply to the Administrator for approval for a shorter useful life period for engines that are subject to severe service in seasonal equipment, or are designed specifically for lower useful life hours to match equipment life. Such an application must be made prior to certification.

[59 FR 31335, June 17, 1994. Redesignated and amended at 63 FR 56995, 56998, Oct. 23, 1998]

§ 89.105 Certificate of conformity.

Every manufacturer of a new nonroad compression-ignition engine must obtain a certificate of conformity covering the engine family, as described in § 89.116. The certificate of conformity must be obtained from the Administrator prior to selling, offering for sale, introducing into commerce, or importing into the United States the new nonroad compression-ignition engine for each model year.

[59 FR 31335, June 17, 1994. Redesignated at 63 FR 56995, Oct. 23, 1998]

§ 89.106 Prohibited controls.

(a) An engine may not be equipped with an emission control system for

the purpose of complying with emission standards if such system will cause or contribute to an unreasonable risk to public health, welfare, or safety in its operation or function.

(b) You may not design your engines with emission-control devices, systems, or elements of design that cause or contribute to an unreasonable risk to public health, welfare, or safety while operating. For example, this would apply if the engine emits a noxious or toxic substance it would otherwise not emit that contributes to such an unreasonable risk.

[59 FR 31335, June 17, 1994. Redesignated at 63 FR 56995, Oct. 23, 1998; 67 FR 68339, Nov. 8, 2002]

§ 89.107 Defeat devices.

(a) An engine may not be equipped with a defeat device.

(b) For purposes of this section, ''defeat device'' means any device, system, or element of design which senses operation outside normal emission test conditions and reduces emission control effectiveness.

(1) Defeat device includes any auxiliary emission control device (AECD) that reduces the effectiveness of the emission control system under conditions which may reasonably be expected to be encountered in normal operation and use unless such conditions are included in the test procedure.

(2) Defeat device does not include such items which either operate only during engine starting or are necessary to protect the engine (or equipment in which it is installed) against damage or accident during its operation.

[59 FR 31335, June 17, 1994. Redesignated at 63 FR 56995, Oct. 23, 1998]

§ 89.108 Adjustable parameters, requirements.

(a) Nonroad engines equipped with adjustable parameters must comply with all requirements of this subpart for any adjustment in the physically adjustable range.

(b) An operating parameter is not considered adjustable if it is permanently sealed or otherwise not normally accessible using ordinary tools.

(c) The Administrator may require that adjustable parameters be set to any specification within its adjustable range for certification, selective enforcement audit, or in-use testing to determine compliance with the requirements of this subpart.

(d) For engines that use noncommercial fuels significantly different than the specified test fuel of the same type, the manufacturer may ask to use the parameter-adjustment provisions of 40 CFR 1039.615 instead of those in this section. Engines certified under this paragraph (d) must be in a separate engine family. See 40 CFR 1039.801 for the definition of ''noncommercial fuels''.

[59 FR 31335, June 17, 1994. Redesignated at 63 FR 56995, Oct. 23, 1998, as amended at 72 FR 53129, Sept. 18, 2007]

§ 89.109 Maintenance instructions and minimum allowable maintenance intervals.

(a) The manufacturer must furnish or cause to be furnished to the ultimate purchaser of each new nonroad engine subject to standards under this part written instructions for the maintenance needed to ensure proper functioning of the emission control system. Paragraphs (b) through (h) of this section do not apply to Tier 1 engines with rated power at or above 37 kW.

(b) Maintenance performed on equipment, engines, subsystems or components used to determine exhaust emission deterioration factors is classified as either emission-related or nonemission-related and each of these can be classified as either scheduled or unscheduled. Further, some emission-related maintenance is also classified as critical emission-related maintenance.

(c) This paragraph (c) specifies emission-related scheduled maintenance for purposes of obtaining durability data for nonroad engines. The maintenance intervals specified below are minimum intervals:

(1) All emission-related scheduled maintenance for purposes of obtaining durability data must occur at the same or longer hours of use intervals as those specified in the manufacturer's maintenance instructions furnished to the ultimate purchaser of the engine under paragraph (a) of this section. This maintenance schedule may be updated as necessary throughout the testing of the engine, provided that no maintenance operation is deleted from

the maintenance schedule after the operation has been performed on the test equipment or engine.

(2) Any emission-related maintenance which is performed on equipment, engines, subsystems, or components must be technologically necessary to ensure in-use compliance with the emission standards. The manufacturer must submit data which demonstrate to the Administrator that all of the emission-related scheduled maintenance which is to be performed is technologically necessary. Scheduled maintenance must be approved by the Administrator prior to being performed or being included in the maintenance instructions provided to the purchasers under paragraph (a) of this section.

(i) The Administrator may require longer maintenance intervals than those listed in paragraphs (c)(3) and (c)(4) of this section where the listed intervals are not technologically necessary.

(ii) The Administrator may allow manufacturers to specify shorter maintenance intervals than those listed in paragraphs (c)(3) and (c)(4) of this section where technologically necessary for engines rated under 19 kW, or for constant speed engines rated under 37 kW with rated speeds greater than or equal to 3,000 rpm.

(3) The adjustment, cleaning, repair, or replacement of items listed in paragraphs (c)(3)(i) through (c)(3)(iii) of this section shall occur at 1,500 hours of use and at 1,500-hour intervals thereafter.

(i) Exhaust gas recirculation system-related filters and coolers.

(ii) Positive crankcase ventilation valve.

(iii) Fuel injector tips (cleaning only).

(4) The adjustment, cleaning and repair of items in paragraphs (c)(4)(i) through (c)(4)(vii) of this section shall occur at 3,000 hours of use and at 3,000-hour intervals thereafter for nonroad compression-ignition engines rated under 130 kW, or at 4,500-hour intervals thereafter for nonroad compression-ignition engines rated at or above 130 kW.

(i) Fuel injectors.

(ii) Turbocharger.

(iii) Electronic engine control unit and its associated sensors and actuators.

(iv) Particulate trap or trap-oxidizer system (including related components).

(v) Exhaust gas recirculation system (including all related control valves and tubing) except as otherwise provided in paragraph (c)(3)(i) of this section.

(vi) Catalytic convertor.

(vii) Any other add-on emission-related component (i.e., a component whose sole or primary purpose is to reduce emissions or whose failure will significantly degrade emission control and whose function is not integral to the design and performance of the engine).

(d) Scheduled maintenance not related to emissions which is reasonable and technologically necessary (e.g., oil change, oil filter change, fuel filter change, air filter change, cooling system maintenance, adjustment of idle speed, governor, engine bolt torque, valve lash, injector lash, timing, lubrication of the exhaust manifold heat control valve, etc.) may be performed on durability vehicles at the least frequent intervals recommended by the manufacturer to the ultimate purchaser, (e.g., not the intervals recommended for severe service).

(e) Adjustment of engine idle speed on emission data engines may be performed once before the low-hour emission test point. Any other engine, emission control system, or fuel system adjustment, repair, removal, disassembly, cleaning, or replacement on emission data vehicles shall be performed only with advance approval of the Administrator.

(f) Equipment, instruments, or tools may not be used to identify malfunctioning, maladjusted, or defective engine components unless the same or equivalent equipment, instruments, or tools will be available to dealerships and other service outlets and:

(1) Are used in conjunction with scheduled maintenance on such components; or

(2) Are used subsequent to the identification of a vehicle or engine malfunction, as provided in paragraph (e) of this section for emission data engines; or

(3) Specifically authorized by the Administrator.

(g) All test data, maintenance reports, and required engineering reports shall be compiled and provided to the Administrator in accordance with § 89.124.

(h)(1) The components listed in paragraphs (h)(1)(i) through (h)(1)(vi) of this section are defined as critical emission-related components.

(i) Catalytic converter.

(ii) Electronic engine control unit and its associated sensors and actuators.

(iii) Exhaust gas recirculation system (including all related filters, coolers, control valves, and tubing).

(iv) Positive crankcase ventilation valve.

(v) Particulate trap or trap-oxidizer system.

(vi) Any other add-on emission-related component (i.e., a component whose sole or primary purpose is to reduce emissions or whose failure will significantly degrade emission control and whose function is not integral to the design and performance of the engine).

(2) All critical emission-related scheduled maintenance must have a reasonable likelihood of being performed in use. The manufacturer must show the reasonable likelihood of such maintenance being performed in-use. Critical emission-related scheduled maintenance items which satisfy one of the conditions defined in paragraphs (h)(2)(i) through (h)(2)(vi) of this section will be accepted as having a reasonable likelihood of being performed in use.

(i) Data are presented which establish for the Administrator a connection between emissions and vehicle performance such that as emissions increase due to lack of maintenance, vehicle performance will simultaneously deteriorate to a point unacceptable for typical operation.

(ii) Survey data are submitted which adequately demonstrate to the Administrator with an 80 percent confidence level that 80 percent of such engines already have this critical maintenance item performed in-use at the recommended interval(s).

(iii) A clearly displayed visible signal system approved by the Administrator is installed to alert the equipment operator that maintenance is due. A signal bearing the message ''maintenance needed'' or ''check engine,'' or a similar message approved by the Administrator, shall be actuated at the appropriate usage point or by component failure. This signal must be continuous while the engine is in operation and not be easily eliminated without performance of the required maintenance. Resetting the signal shall be a required step in the maintenance operation. The method for resetting the signal system shall be approved by the Administrator. The system must not be designed to deactivate upon the end of the useful life of the engine or thereafter.

(iv) A manufacturer may desire to demonstrate through a survey that a critical maintenance item is likely to be performed without a visible signal on a maintenance item for which there is no prior in-use experience without the signal. To that end, the manufacturer may in a given model year market up to 200 randomly selected vehicles per critical emission-related maintenance item without such visible signals, and monitor the performance of the critical maintenance item by the owners to show compliance with paragraph (h)(2)(ii) of this section. This option is restricted to two consecutive model years and may not be repeated until any previous survey has been completed. If the critical maintenance involves more than one engine family, the sample will be sales weighted to ensure that it is representative of all the families in question.

(v) The manufacturer provides the maintenance free of charge, and clearly informs the customer that the maintenance is free in the instructions provided under paragraph (a) of this section.

(vi) The manufacturer uses any other method which the Administrator approves as establishing a reasonable likelihood that the critical maintenance will be performed in-use.

(3) Visible signal systems used under paragraph (h)(2)(iii) of this section are considered an element of design of the emission control system. Therefore,

disabling, resetting, or otherwise rendering such signals inoperative without also performing the indicated maintenance procedure is a prohibited act.

[63 FR 56999, Oct. 23, 1998]

§ 89.110 Emission control information label.

(a) The manufacturer must affix at the time of manufacture a permanent and legible label identifying each nonroad engine. The label must meet the following requirements:

(1) Be attached in such a manner that it cannot be removed without destroying or defacing the label;

(2) Be durable and readable for the entire engine life;

(3) Be secured to an engine part necessary for normal engine operation and not normally requiring replacement during engine life;

(4) Be written in English; and

(5) Be located so as to be readily visible to the average person after the engine is installed in the equipment. A supplemental label meeting all the requirements of this section may be attached to a location other than the engine, in cases where the required label must be obscured after the engine is installed in the equipment.

(b) The label must contain the following information:

(1) The heading ''Important Engine Information;''

(2) The full corporate name and trademark of the manufacturer; though the label may identify another company and use its trademark instead of the manufacturer's if the provisions of § 89.1009 are met.

(3) EPA standardized engine family designation;

(4) Engine displacement;

(5) Advertised power;

(6) Engine tuneup specifications and adjustments. These should indicate the proper transmission position during tuneup, and accessories (for example, air conditioner), if any, that should be in operation;

(7) Fuel requirements;

(8) Date of manufacture (month and year). The manufacturer may, in lieu of including the date of manufacture on the engine label, maintain a record of the engine manufacture dates. The manufacturer shall provide the date of manufacture records to the Administrator upon request;

(9) Family emission limits (FELs) if applicable;

(10) The statement: ''This engine conforms to [model year] U.S. EPA regulations large nonroad compression- ignition engines;''

(11) Engines belonging to an engine family that has been certified as a constant-speed engine using the test cycle specified in Table 2 of appendix B to subpart E of this part must contain the statement on the label: ''constant-speed only''; and

(12) Engines meeting the voluntary standards described in § 89.112(f)(1) to be designated as Blue Sky Series engines must contain the statement on the label: ''Blue Sky Series''.

(c) Other information concerning proper maintenance and use or indicating compliance or noncompliance with other standards may be indicated on the label.

(d) Each engine must have a legible unique engine identification number permanently affixed to or engraved on the engine.

[59 FR 31335, June 17, 1994. Redesignated and amended at 63 FR 56995, 57000, Oct. 23, 1998; 70 FR 40444, July 13, 2005]

§ 89.111 Averaging, banking, and trading of exhaust emissions.

Regulations regarding the availability of an averaging, banking, and trading program along with applicable record- keeping requirements are found in subpart C of this part. Participation in the averaging, banking, and trading program is optional.

[59 FR 31335, June 17, 1994. Redesignated at 63 FR 56995, Oct. 23, 1998]

§ 89.112 Oxides of nitrogen, carbon monoxide, hydrocarbon, and particulate matter exhaust emission standards.

(a) Exhaust emission from nonroad engines to which this subpart is applicable shall not exceed the applicable exhaust emission standards contained in Table 1, as follows:

Table 1.—Emission Standards (g/kW-hr)

Rated Power (kW)	Tier	Model Year[1]	NOx	HC	NMHC + NOx	CO	PM
kW<8	Tier 1	2000	—	—	10.5	8.0	1.0
	Tier 2	2005	—	—	7.5	8.0	0.80
8≤kW<19	Tier 1	2000	—	—	9.5	6.6	0.80
	Tier 2	2005	—	—	7.5	6.6	0.80
19≤kW<37	Tier 1	1999	—	—	9.5	5.5	0.80
	Tier 2	2004	—	—	7.5	5.5	0.60
37≤kW<75	Tier 1	1998	9.2	—	—	—	—
	Tier 2	2004	—	—	7.5	5.0	0.40
	Tier 3	2008	—	—	4.7	5.0	
75≤kW<130	Tier 1	1997	9.2	—	—	—	—
	Tier 2	2003	—	—	6.6	5.0	0.30
	Tier 3	2007	—	—	4.0	5.0	
130≤kW<225	Tier 1	1996	9.2	1.3	—	11.4	0.54
	Tier 2	2003	—	—	6.6	3.5	0.20
	Tier 3	2006	—	—	4.0	3.5	
225≤kW<450	Tier 1	1996	9.2	1.3	—	11.4	0.54
	Tier 2	2001	—	—	6.4	3.5	0.20
	Tier 3	2006	—	—	4.0	3.5	
450≤kW≤560	Tier 1	1996	9.2	1.3	—	11.4	0.54
	Tier 2	2002	—	—	6.4	3.5	0.20
	Tier 3	2006	—	—	4.0	3.5	
kW>560	Tier 1	2000	9.2	1.3	—	11.4	0.54
	Tier 2	2006	—	—	6.4	3.5	0.20

[1] The model years listed indicate the model years for which the specified tier of standards take effect.

(b) Exhaust emissions of oxides of nitrogen, carbon monoxide, hydrocarbon, and nonmethane hydrocarbon are measured using the procedures set forth in subpart E of this part.

(c) Exhaust emission of particulate matter is measured using the California Regulations for New 1996 and Later Heavy-Duty Off-Road Diesel Cycle Engines. This procedure is incorporated by reference. See § 89.6.

(d) In lieu of the NO_X standards, NMHC + NO_X standards, and PM standards specified in paragraph (a) of this section, manufacturers may elect to include engine families in the averaging, banking, and trading program, the provisions of which are specified in subpart C of this part. The manufacturer must set a family emission limit (FEL) not to exceed the levels contained in Table 2. The FEL established by the manufacturer serves as the standard for that engine family. Table 2 follows:

Table 2.—Upper Limit for Family Emission Limits (g/kW-hr)

Rated Power (kW)	Tier	Model Year[1]	NOx FEL	NMHC+ NOx FEL	PM FEL
kW<8	Tier 1	2000	—	16.0	1.2
	Tier 2	2005	—	10.5	1.0
8≤kW<19	Tier 1	2000	—	16.0	1.2
	Tier 2	2005	—	9.5	0.80
19≤kW<37	Tier 1	1999	—	16.0	1.2
	Tier 2	2004	—	9.5	0.80
37≤kW<75	Tier 1	1998	14.6	—	—
	Tier 2	2004	—	11.5	1.2
	Tier 3	2008	—	7.5	
75≤kW<130	Tier 1	1997	14.6	—	—
	Tier 2	2003	—	11.5	1.2
	Tier 3	2007	—	6.6	
130≤kW<225	Tier 1	1996	14.6	—	—
	Tier 2	2003	—	10.5	0.54
	Tier 3	2006	—	6.6	
225≤kW<450	Tier 1	1996	14.6	—	—
	Tier 2	2001	—	10.5	0.54
	Tier 3	2006	—	6.4	
450≤kW≤560	Tier 1	1996	14.6	—	—
	Tier 2	2002	—	10.5	0.54
	Tier 3	2006	—	6.4	
kW>560	Tier 1	2000	14.6	—	—
	Tier 2	2006	—	10.5	0.54

[1] The model years listed indicate the model years for which the specified tier of limits take effect.

(e) Naturally aspirated nonroad engines to which this subpart is applicable shall not discharge crankcase emissions into the ambient atmosphere, unless such crankcase emissions are permanently routed into the exhaust and included in all exhaust emission measurements. This provision applies to all

Tier 2 engines and later models. This provision does not apply to engines using turbochargers, pumps, blowers, or superchargers for air induction.

(f) The following paragraphs define the requirements for low-emitting Blue Sky Series engines:

(1) *Voluntary standards.* Engines may be designated ''Blue Sky Series'' engines by meeting the voluntary standards listed in Table 3, which apply to all certification and in-use testing, as follows:

TABLE 3—VOLUNTARY EMISSION STANDARDS (G/KW-HR)

Rated Brake Power (kW)	NMHC+NO_X	PM
kW<8	4.6	0.48
8≤kW<19	4.5	0.48
19≤kW<37	4.5	0.36
37≤kW<75	4.7	0.24
75≤kW<130	4.0	0.18
130≤kW≤560	4.0	0.12
kW>560	3.8	0.12

(2) *Additional standards.* Blue Sky Series engines are subject to all provisions that would otherwise apply under this part, except as specified in paragraph (f)(3) of this section.

(3) *Test procedures.* NO_X, NMHC, and PM emissions are measured using the procedures set forth in 40 CFR part 1065, in lieu of the procedures set forth in subpart E of this part. CO emissions may be measured using the procedures set forth either in 40 CFR part 1065 or in subpart E of this part. Manufacturers may use an alternate procedure to demonstrate the desired level of emission control if approved in advance by the Administrator. Engines meeting the requirements to qualify as Blue Sky Series engines must be capable of maintaining a comparable level of emission control when tested using the procedures set forth in paragraph (c) of this section and subpart E of this part. The numerical emission levels measured using the procedures from subpart E of this part may be up to 20 percent higher than those measured using the procedures from 40 CFR part 1065 and still be considered comparable.

(g) Manufacturers of engines at or above 37 kW and below 56 kW from model years 2008 through 2012 that are subject to the standards of this section under 40 CFR 1039.102 must take the following additional steps:

(1) State the applicable PM standard on the emission control information label.

(2) Add information to the emission-related installation instructions to clarify the equipment manufacturer's obligations under 40 CFR 1039.104(f).

[59 FR 31335, June 17, 1994. Redesignated and amended at 63 FR 56995, 57000, Oct. 23, 1998; 69 FR 39212, June 29, 2004; 70 FR 40444, July 13, 2005]

§ 89.113 Smoke emission standard.

(a) Exhaust opacity from compression-ignition nonroad engines for which this subpart is applicable must not exceed:

(1) 20 percent during the acceleration mode;

(2) 15 percent during the lugging mode; and

(3) 50 percent during the peaks in either the acceleration or lugging modes.

(b) Opacity levels are to be measured and calculated as set forth in 40 CFR part 86, subpart I. Notwithstanding the provisions of 40 CFR part 86, subpart I, two-cylinder nonroad engines may be tested using an exhaust muffler that is representative of exhaust mufflers used with the engines in use.

(c) The following engines are exempt from the requirements of this section:

(1) Single-cylinder engines;

(2) Propulsion marine diesel engines; and

(3) Constant-speed engines.

[59 FR 31335, June 17, 1994. Redesignated and amended at 63 FR 56995, 57003, Oct. 23, 1998]

§ 89.114 Special and alternate test procedures.

(a) *Special test procedures.* The Administrator may, on the basis of written application by a manufacturer, establish special test procedures other than those set forth in this part, for any nonroad engine that the Administrator determines is not susceptible to satisfactory testing under the specified test procedures set forth in subpart E of this part or 40 CFR part 86, subpart I.

(b) *Alternate test procedures.* (1) A manufacturer may elect to use an alternate test procedure provided that it yields equivalent results to the specified procedures, its use is approved in

advance by the Administrator, and the basis for equivalent results with the specified test procedures is fully described in the manufacturer's application.

(2) The Administrator may reject data generated under alternate test procedures which do not correlate with data generated under the specified procedures.

(3) A manufacturer may elect to use the test procedures in 40 CFR part 1065 as an alternate test procedure without advance approval by the Administrator. The manufacturer must identify in its application for certification that the engines were tested using the procedures in 40 CFR part 1065. For any EPA testing with Tier 2 or Tier 3 engines, EPA will use the manufacturer's selected procedures for mapping engines, generating duty cycles, and applying cycle-validation criteria. For any other parameters, EPA may conduct testing using either of the specified procedures.

(4) Where we specify mandatory compliance with the procedures of 40 CFR part 1065, such as in § 89.419, manufacturers may elect to use the procedures specified in 40 CFR part 86, subpart N, as an alternate test procedure without advance approval by the Administrator.

[59 FR 31335, June 17, 1994. Redesignated and amended at 63 FR 56995, 57003, Oct. 23, 1998; 69 FR 39212, June 29, 2004; 70 FR 40445, July 13, 2005]

§ 89.115 Application for certificate.

(a) For each engine family that complies with all applicable standards and requirements, the engine manufacturer must submit to the Administrator a completed application for a certificate of conformity.

(b) The application must be approved and signed by the authorized representative of the manufacturer.

(c) The application will be updated and corrected by amendment as provided for in § 89.123 to accurately reflect the manufacturer's production.

(d) *Required content.* Each application must include the following information:

(1) A description of the basic engine design including, but not limited to, the engine family specifications, the provisions of which are contained in § 89.116;

(2) An explanation of how the emission control system operates, including a detailed description of all emission control system components, each auxiliary emission control device (AECD), and all fuel system components to be installed on any production or test engine(s);

(3) Proposed test fleet selection and the rationale for the test fleet selection;

(4) Special or alternate test procedures, if applicable;

(5) The period of operation necessary to accumulate service hours on test engines and stabilize emission levels;

(6) A description of all adjustable operating parameters (including, but not limited to, injection timing and fuel rate), including the following:

(i) The nominal or recommended setting and the associated production tolerances;

(ii) The intended physically adjustable range;

(iii) The limits or stops used to establish adjustable ranges;

(iv) Production tolerances of the limits or stops used to establish each physically adjustable range; and

(v) Information relating to why the physical limits or stops used to establish the physically adjustable range of each parameter, or any other means used to inhibit adjustment, are effective in preventing adjustment of parameters to settings outside the manufacturer's intended physically adjustable ranges on in-use engines;

(7) For families participating in the averaging, banking, and trading program, the information specified in subpart C of this part;

(8) A description of the test equipment and fuel proposed to be used;

(9) All test data obtained by the manufacturer on each test engine, including CO_2 as specified in § 89.407(d)(1);

(10) An unconditional statement certifying that all engines in the engine family comply with all requirements of this part and the Clean Air Act.

(11) A statement indicating whether the engine family contains only nonroad engines, only stationary engines, or both.

(e) At the Administrator's request, the manufacturer must supply such additional information as may be required to evaluate the application including, but not limited to, projected nonroad engine production.

(f)(1) The Administrator may modify the information submission requirements of paragraph (d) of this section, provided that all of the information specified therein is maintained by the engine manufacturer as required by § 89.124, and amended, updated, or corrected as necessary.

(2) For the purposes of this paragraph, § 89.124(a)(1) includes all information specified in paragraph (d) of this section whether or not such information is actually submitted to the Administrator for any particular model year.

(3) The Administrator may review an engine manufacturer's records at any time. At the Administrator's discretion, this review may take place either at the manufacturer's facility or at another facility designated by the Administrator.

(g) The manufacturer must name an agent for service located in the United States. Service on this agent constitutes service on the manufacturer or any of its officers or employees for any action by EPA or otherwise by the United States related to the requirements of this part.

[59 FR 31335, June 17, 1994, as amended at 61 FR 20741, May 8, 1996. Redesignated at 63 FR 56995, Oct. 23, 1998, as amended at 71 FR 39184, July 11, 2006; 72 FR 53129, Sept. 18, 2007; 74 FR 56374, Oct. 30, 2009]

§ 89.116 Engine families.

(a) A manufacturer's product line is divided into engine families that are comprised of engines expected to have similar emission characteristics throughout their useful life periods.

(b) The following characteristics distinguish engine families:

(1) Fuel;

(2) Cooling medium;

(3) Method of air aspiration;

(4) Method of exhaust aftertreatment (for example, catalytic converter or particulate trap);

(5) Combustion chamber design;

(6) Bore;

(7) Stroke;

(8) Number of cylinders, (engines with aftertreatment devices only); and

(9) Cylinder arrangement (engines with aftertreatment devices only).

(c) Upon a showing by the manufacturer that the useful life period emission characteristics are expected to be similar, engines differing in one or more of the characteristics in paragraph (b) of this section may be grouped in the same engine family.

(d) Upon a showing by the manufacturer that the expected useful life period emission characteristics will be different, engines identical in all the characteristics of paragraph (b) of this section may be divided into separate engine families.

(e)(1) This paragraph (e) applies only to the placement of Tier 1 engines with power ratings under 37 kW into engine families. The provisions of paragraphs (a) through (d) of this section also apply to these engines. The power categories referred to in this paragraph (e) are those for which separate standards or implementation dates are described in § 89.112.

(2) A manufacturer may place engines with power ratings in one power category into an engine family comprised of engines with power ratings in another power category, and consider all engines in the engine family as being in the latter power category for the purpose of determining compliance with the standards and other requirements of this part, subject to approval in advance by the Administrator and the following restrictions:

(i) The engines that have power ratings outside the engine family's power category must constitute less than half of the engine family's sales in each model year for which the engine family grouping is made; and

(ii) The engines that have power ratings outside the engine family's power category must have power ratings that are within ten percent of either of the two power levels that define the engine family's power category.

(3) The restrictions described in paragraphs (e)(2)(i) and (e)(2)(ii) of this section do not apply if the emissions standards and other requirements of this part are at least as stringent for the engine family's power category as those of the other power categories

containing engines in the engine family.

[59 FR 31335, June 17, 1994. Redesignated and amended at 63 FR 56995, 57003, Oct. 23, 1998]

§ 89.117 Test fleet selection.

(a) The manufacturer must select for testing, from each engine family, the engine with the most fuel injected per stroke of an injector, primarily at the speed of maximum torque and secondarily at rated speed.

(b) Each engine in the test fleet must be constructed to be representative of production engines.

(c) After review of the manufacturer's test fleet, the Administrator may select from the available fleet one additional test engine from each engine family.

(d) For establishing deterioration factors, the manufacturer shall select the engines, subsystems, or components to be used to determine exhaust emission deterioration factors for each engine-family control system combination. Engines, subsystems, or components shall be selected so that their emission deterioration characteristics are expected to represent those of in-use engines, based on good engineering judgment.

[59 FR 31335, June 17, 1994. Redesignated and amended at 63 FR 56995, 57003, Oct. 23, 1998]

§ 89.118 Deterioration factors and service accumulation.

This section applies to service accumulation used to determine deterioration factors and service accumulation used to condition test engines. Paragraphs (a) and (b) of this section apply only for service accumulation used to condition test engines. Paragraph (e) of this section applies only for service accumulation used to determine deterioration factors. Paragraphs (c) and (d) of this section apply for all service accumulation required by this part.

(a)(1) Each test engine in the test fleet must be operated with all emission control systems operating properly for a period sufficient to stabilize emissions.

(2) A manufacturer may elect to consider as stabilized emission levels from engines with no more than 125 hours of service.

(b) No maintenance, other than recommended lubrication and filter changes, may be performed during service accumulation without the Administrator's approval.

(c) Service accumulation should be performed in a manner using good engineering judgment to ensure that emissions are representative of in-use engines.

(d) The manufacturer must maintain, and provide to the Administrator if requested, records stating the rationale for selecting the service accumulation period and records describing the method used to accumulate service hours on the test engine(s).

(e) This paragraph (e) describes service accumulation and alternative requirements for the purpose of developing deterioration factor.

(1) *Service accumulation on engines, subsystems, or components selected by the manufacturer under § 89.117(d).* The manufacturer shall describe the form and extent of this service accumulation in the application for certification.

(2) *Determination of exhaust emission deterioration factors.* The manufacturer shall determine the deterioration factors in accordance with the applicable provisions of this part based on service accumulation and related testing, according to the manufacturer's procedures, except as provided in paragraph (e)(3) of this section.

(3) *Alternatives to service accumulation and testing for the determination of a deterioration factor.* A written explanation of the appropriateness of using an alternative must be included in the application for certification.

(i) *Carryover and carryacross of durability emission data.* In lieu of testing an emission data or durability data engine selected under § 89.117(d), a manufacturer may, with Administrator approval, use exhaust emission deterioration data on a similar engine for which certification to the same standard has previously been obtained or for which all applicable data required under § 89.124 has previously been submitted. This data must be submitted in the application for certification.

(ii) *Use of on-highway deterioration data.* In the case where a manufacturer produces a certified on-highway engine that is similar to the nonroad engine

to be certified, deterioration data from the on-highway engine may be applied to the nonroad engine. This application of deterioration data from an on-highway engine to a nonroad engine is subject to Administrator approval, and the determination of whether the engines are similar must be based on good engineering judgment.

(iii) *Engineering analysis for established technologies.* (A) In the case where an engine family uses established technology, an analysis based on good engineering practices may be used in lieu of testing to determine a deterioration factor for that engine family, subject to Administrator approval.

(B) Engines for which the certification levels are not at or below the Tier 3 NMHC+NO_X standards described in § 89.112 are considered established technology, except as provided in paragraph (e)(3)(iii)(D) of this section.

(C) Manufacturers may petition the Administrator to consider an engine with a certification level below the Tier 3 +NO_X standards as established technology. This petition must be based on proof that the technology used is not significantly different than that used on engines that have certification levels that are not below the Tier 3 NMHC+NO_X levels.

(D) Engines using exhaust gas recirculation or aftertreatment are excluded from the provision set forth in paragraphs (e)(3)(iii)(A) through (e)(3)(iii)(C) of this section.

(E) The manufacturer shall provide a written statement to the Administrator that all data, analyses, test procedures, evaluations, and other documents, on which the deterioration factor is based, are available to the Administrator upon request.

(iv) *Interim provision for engines rated under 37 kW.* For model year 1999 and 2000 engines rated under 37 kW, manufacturers may determine deterioration factors based on good engineering judgement and reasonably available information. The manufacturer must maintain and provide to the Administrator, if requested, all information used to determine deterioration factors for these engines.

[59 FR 31335, June 17, 1994. Redesignated and amended at 63 FR 56995, 57003, Oct. 23, 1998]

§ 89.119 Emission tests.

(a) *Manufacturer testing.* (1) Upon completion of service accumulation, the manufacturer must test each test engine using the specified test procedures, except as provided in § 89.114. The procedures to be used are set forth in:

(i) Subpart E of this part;

(ii) The California Regulations for New 1996 and Later Heavy-Duty Off-Road Diesel Cycle Engines. This procedure has been incorporated by reference. See § 89.6; and

(iii) Part 86, subpart I of this chapter.

(2) Each test engine must be configured to be representative of actual in-use operation. The Administrator may specify the adjustment of any adjustable parameter. All test results must be reported to the Administrator.

(b) *Confirmatory testing.* The Administrator may conduct confirmatory testing or other testing on any test engine. The manufacturer must deliver test engines as directed by the Administrator. When the Administrator conducts confirmatory testing or other testing, those test results are used to determine compliance with emission standards.

(c) *Use of carryover test data.* In lieu of testing to certify an engine family for a given model year, the manufacturer may submit, with the Administrator's approval, emission test data used to certify that engine family in previous years. This ''carryover'' data is only allowable if the submitted test data show that the test engine would comply with the emission standard(s) for the model year for which certification is being sought.

(d) The provisions of this paragraph (d) apply only to Tier 1 nonroad engines without exhaust aftertreatment rated at or above 37 kW.

(1) Particulate emission measurements from Tier 1 nonroad engines without exhaust aftertreatment rated at or above 37 kW may be adjusted to a sulfur content of 0.05 weight percent.

(2) Adjustments to the particulate measurement shall be made using the following equation:

$$PM_{adj}=PM-[BSFC \times 0.0917 \times (FSF-0.0005)]$$

Where:

PM_{adj}=adjusted measured PM level [g/Kw-hr].
PM=measured weighted PM level [g/Kw-hr].
BSFC=measured brake specific fuel consumption [G/Kw-hr].
FSF=fuel sulfur weight fraction.

(3) Where a manufacturer certifies using test fuel with a sulfur content less than or equal to 0.050 weight percent, EPA shall not use emission data collected using test fuel with a sulfur content greater than 0.050 weight percent to determine compliance with the Tier 1 PM standards.

(4) Where a manufacturer certifies using test fuel with a sulfur content greater than 0.050 weight percent, EPA shall not use emission data collected using test fuel with a sulfur content greater than 0.050 weight percent to determine compliance with the Tier 1 PM standards, unless EPA adjusts the PM measurement using the equation specified in paragraph (d)(2) of this section.

[59 FR 31335, June 17, 1994. Redesignated and amended at 63 FR 56995, 57004, Oct. 23, 1998]

§ 89.120 Compliance with emission standards.

(a) If all test engines representing an engine family have emissions less than or equal to each emission standard, that family complies with the emission standards.

(b) If any test engine representing an engine family has emissions greater than each emission standard, that family will be deemed not in compliance with the emission standard(s).

(c) For each nonroad engine family, except Tier 1 engine families with rated power at or above 37 kW that do not employ aftertreatment, a deterioration factor must be determined and applied.

(1) The applicable exhaust emission standards (or family emission limits, as appropriate) for nonroad compression-ignition engines apply to the emissions of engines for their useful life.

(2) [Reserved]

(3)(i) This paragraph (c)(3) describes the procedure for determining compliance of an engine with emission standards (or family emission limits, as appropriate), based on deterioration factors supplied by the manufacturer. The NMHC + NO_X deterioration factors shall be established based on the sum of the pollutants, except as provided in paragraph (c)(3)(iv) of this section. When establishing deterioration factors for NMHC + NO_X. a negative deterioration (emissions decrease from the official emissions test result) for one pollutant may not offset deterioration of the other pollutant.

(ii) Separate emission deterioration factors, determined by the manufacturer according to the requirements of § 89.118, shall be provided in the certification application for each engine-system combination. Separate deterioration factors shall be established for each regulated pollutant, except that a combined NMHC + NO_X deterioration factor shall be established for compression-ignition nonroad engines not utilizing aftertreatment technology. For smoke testing, separate deterioration factors shall also be established for the acceleration mode (designated as ''A''), the lugging mode (designated as ''B''), and peak opacity (designated as ''C'').

(iii) *Compression-ignition nonroad engines not utilizing aftertreatment technology (e.g., particulate traps).* For CO, NMHC + NO_X. and particulate, the official exhaust emission results for each emission data engine at the selected test point shall be adjusted by addition of the appropriate deterioration factor. However, if the deterioration factor supplied by the manufacturer is less than zero, it shall be zero for the purposes of this paragraph (c)(3)(iii).

(iv) *Compression-ignition nonroad engines utilizing aftertreatment technology (e.g., particulate traps).* For CO, NMHC + NO_X. and particulate, the official exhaust emission results for each emission data engine at the selected test point shall be adjusted by multiplication by the appropriate deterioration factor. Separate NMHC and NO_X deterioration factors shall be applied to the results for these pollutants prior to combining the results. If the deterioration factor supplied by the manufacturer is less than one, it shall be one for the purposes of this paragraph (c)(3)(iv).

(v) For acceleration smoke (''A''), lugging smoke (''B''), and peak opacity (''C''), the official exhaust emission results for each emission data engine at

the selected test point shall be adjusted by the addition of the appropriate deterioration factor. However if the deterioration supplied by the manufacturer is less than zero, it shall be zero for the purposes of this paragraph (c)(3)(v).

(vi) The emission values to compare with the standards (or family emission limits, as appropriate) shall be the adjusted emission values of paragraphs (c)(3)(iii) through (v) of this section, rounded to the same number of significant figures as contained in the applicable standard in accordance with ASTM E29–93a, for each emission data engine. This procedure has been incorporated by reference at § 89.6.

(4) Every test engine of an engine family must comply with all applicable standards (or family emission limits, as appropriate), as determined in paragraph (c)(3)(vi) of this section, before any engine in that family will be certified.

(d) For engine families included in the averaging, banking, and trading program, the families' emission limits (FELs) are used in lieu of the applicable federal emission standard.

(e) For the purposes of setting an NMHC + NO_X certification level or FEL, one of the following options shall be used for the determination of NMHC for an engine family. The manufacturer must declare which option is used in its application for certification of that engine family.

(1) The manufacturer may assume that up to two percent of the measured THC is methane (NMHC = 0.98 × THC).

(2) The manufacturer may measure NMHC emissions using a method approved by the Administrator prior to the start of testing. This option allows the determination of NMHC emissions by subtracting measured methane emissions from measured THC emissions.

[59 FR 31335, June 17, 1994. Redesignated and amended at 63 FR 56995, 57004, Oct. 23, 1998]

§ 89.121 Certificate of conformity effective dates.

The certificate of conformity is valid from the date of issuance by EPA until 31 December of the model year or calendar year for which it is issued.

[59 FR 31335, June 17, 1994. Redesignated at 63 FR 56995, Oct. 23, 1998]

§ 89.122 Certification.

(a) If, after a review of the manufacturer's application, request for certificate, information obtained from any inspection, and such other information as the Administrator may require, the Administrator determines that the application is complete and that the engine family meets the requirements of this part and the Clean Air Act, the Administrator shall issue a certificate of conformity.

(b) If, after a review of the information described in paragraph (a) of this section, the Administrator determines that the requirements of this part and the Clean Air Act have not been met, the Administrator will deny certification. The Administrator must give a written explanation when certification is denied. The manufacturer may request a hearing on a denial.

[59 FR 31335, June 17, 1994. Redesignated at 63 FR 56995, Oct. 23, 1998]

§ 89.123 Amending the application and certificate of conformity.

(a) The manufacturer of nonroad compression-ignition engines must notify the Administrator when changes to information required to be described in the application for certification are to be made to a product line covered by a certificate of conformity. This notification must include a request to amend the application or the existing certificate of conformity. Except as provided in paragraph (e) of this section, the manufacturer shall not make said changes or produce said engines prior to receiving approval from EPA.

(b) A manufacturer's request to amend the application or the existing certificate of conformity shall include the following information:

(1) A full description of the change to be made in production or of the engine to be added;

(2) Engineering evaluations or data showing that engines as modified or added will comply with all applicable emission standards; and

(3) A determination whether the manufacturer's original test fleet selection is still appropriate, and if the original test fleet selection is determined not to be appropriate, proposed test fleet selection(s) representing the engines changed or added which would have been required if the engines had been included in the original application for certification.

(c) The Administrator may require the manufacturer to perform tests on the engine representing the engine to be added or changed.

(d) *Decision by Administrator*. (1) Based on the description of the proposed amendment and data derived from such testing as the Administrator may require or conduct, the Administrator will determine whether the proposed change or addition would still be covered by the certificate of conformity then in effect.

(2) If the Administrator determines that the change or new engine(s) meets the requirements of this subpart and the Act, the appropriate certificate of conformity is amended.

(3) If the Administrator determines that the changed or new engine(s) does not meet the requirements of this subpart and the Act, the certificate of conformity will not be amended. The Administrator shall provide a written explanation to the manufacturer of the decision not to amend the certificate. The manufacturer may request a hearing on a denial.

(e) A manufacturer may make changes in or additions to production engines concurrently with notifying the Administrator as required by paragraph (a) of this section, if the manufacturer complies with the following requirements:

(1) In addition to the information required in paragraph (b) of this section, the manufacturer must supply supporting documentation, test data, and engineering evaluations as appropriate to demonstrate that all affected engines will still meet applicable emission standards.

(2) If, after a review, the Administrator determines additional testing is required, the manufacturer must provide required test data within 30 days or cease production of the affected engines.

(3) If the Administrator determines that the affected engines do not meet applicable requirements, the Administrator will notify the manufacturer to cease production of the affected engines and to recall and correct at no expense to the owner all affected engines previously produced.

(4) Election to produce engines under this paragraph will be deemed to be a consent to recall all engines which the Administrator determines do not meet applicable standards and to cause such nonconformity to be remedied at no expense to the owner.

[59 FR 31335, June 17, 1994. Redesignated at 63 FR 56995, Oct. 23, 1998]

§ 89.124 Record retention, maintenance, and submission.

(a) The manufacturer of any nonroad compression-ignition engine must maintain the following adequately organized records:

(1) Copies of all applications filed with the Administrator.

(2) A detailed history of each test engine used for certification including the following:

(i) A description of the test engine's construction, including a general description of the origin and buildup of the engine, steps taken to ensure that it is representative of production engines, description of components specially built for the test engine, and the origin and description of all emission-related components;

(ii) A description of the method used for service accumulation, including date(s) and the number of hours accumulated;

(iii) A description of all maintenance, including modifications, parts changes, and other servicing performed, and the date(s) and reason(s) for such maintenance;

(iv) A description of all emission tests performed (except tests performed by the EPA directly) including routine and standard test documentation, as specified in subpart E of this part, date(s) and the purpose of each test;

(v) A description of all tests performed to diagnose engine or emission control performance, giving the date and time of each and the reason(s) for the test; and

(vi) A description of any significant event(s) affecting the engine during the period covered by the history of the test engine but not described by an entry under one of the previous paragraphs of this section.

(3) Information required to be kept by the manufacturer in § 89.118(e)(3) for alternatives to service accumulation and testing for the determination of a deterioration factor.

(b) Routine emission test data, such as those reporting test cell temperature and relative humidity at start and finish of test and raw emission results from each mode or test phase, must be retained for a period of one year after issuance of all certificates of conformity to which they relate. All other information specified in paragraph (a) of this section must be retained for a period of eight years after issuance of all certificates of conformity to which they relate.

(c) Records may be kept in any format and on any media, provided that at the Administrator's request, organized, written records in English are promptly supplied by the manufacturer.

(d) The manufacturer must supply, at the Administrator's request, copies of any engine maintenance instructions or explanations issued by the manufacturer.

[59 FR 31335, June 17, 1994. Redesignated and amended at 63 FR 56995, 57005, Oct. 23, 1998]

§ 89.125 Production engines, annual report.

(a) Upon the Administrator's request, the manufacturer must supply a reasonable number of production engines for testing and evaluation. These engines must be representative of typical production and must be supplied for testing at such time and place and for such reasonable periods as the Administrator may require.

(b) The manufacturer must annually, within 30 days after the end of the model year, notify the Administrator of the number of engines produced by engine family, by gross power, by displacement, by fuel system, and, for engines produced under the provision of § 89.102(g), by engine model and purchaser (or shipping destination for engines used by the engine manufacturer), or by other categories as the Administrator may require.

[59 FR 31335, June 17, 1994. Redesignated and amended at 63 FR 56995, 57005, Oct. 23, 1998]

§ 89.126 Denial, revocation of certificate of conformity.

(a) If, after review of the manufacturer's application, request for certification, information obtained from any inspection, and any other information the Administrator may require, the Administrator determines that one or more test engines do not meet applicable standards (or family emission limits, as appropriate), then the Administrator will notify the manufacturer in writing, setting forth the basis for this determination.

(b) Notwithstanding the fact that engines described in the application may comply with all other requirements of this subpart, the Administrator may deny the issuance of, suspend, or revoke a previously issued certificate of conformity if the Administrator finds any one of the following infractions to be substantial:

(1) The manufacturer submits false or incomplete information;

(2) The manufacturer denies an EPA enforcement officer or EPA authorized representative the opportunity to conduct authorized inspections;

(3) The manufacturer fails to supply requested information or amend its application to include all engines being produced;

(4) The manufacturer renders inaccurate any test data which it submits or otherwise circumvents the intent of the Act or this part;

(5) The manufacturer denies an EPA enforcement officer or EPA authorized representative reasonable assistance (as defined in § 89.129(e)).

(c) If a manufacturer knowingly commits an infraction specified in paragraph (b)(1) or (b)(4) of this section, knowingly commits any other fraudulent act which results in the issuance of a certificate of conformity, or fails to comply with the conditions specified in § 89.203(d), § 89.206(c), § 89.209(c) or § 89.210(g), the Administrator may deem such certificate void ab initio.

(d) When the Administrator denies, suspends, revokes, or voids ab initio a

certificate of conformity the manufacturer will be provided a written determination. The manufacturer may request a hearing under § 89.127 on the Administrator's decision.

(e) Any suspension or revocation of a certificate of conformity shall extend no further than to forbid the introduction into commerce of engines previously covered by the certification which are still in the hands of the manufacturer, except in cases of such fraud or other misconduct that makes the certification invalid ab initio.

[59 FR 31335, June 17, 1994. Redesignated and amended at 63 FR 56995, 57005, Oct. 23, 1998]

§ 89.127 Request for hearing.

(a) A manufacturer may request a hearing on the Administrator's denial, suspension, voiding ab initio or revocation of a certificate of conformity.

(b) The manufacturer's request must be filed within 30 days of the Administrator's decision, be in writing, and set forth the manufacturer's objections to the Administrator's decision and data to support the objections.

(c) If, after review of the request and supporting data, the Administrator finds that the request raises a substantial and factual issue, the Administrator will grant the manufacturer's request for a hearing.

[59 FR 31335, June 17, 1994. Redesignated at 63 FR 56995, Oct. 23, 1998]

§ 89.128 Hearing procedures.

(a)(1) After granting a request for a hearing the Administrator shall designate a Presiding Officer for the hearing.

(2) The hearing will be held as soon as practicable at a time and place determined by the Administrator or by the Presiding Officer.

(3) The Administrator may, at his or her discretion, direct that all argument and presentation of evidence be concluded within a specified period established by the Administrator. Said period may be no less than 30 days from the date that the first written offer of a hearing is made to the manufacturer. To expedite proceedings, the Administrator may direct that the decision of the Presiding Officer (who may, but need not, be the Administrator) shall be the final EPA decision.

(b)(1) Upon appointment pursuant to paragraph (a) of this section, the Presiding Officer will establish a hearing file. The file shall consist of the following:

(i) The determination issued by the Administrator under § 89.126(d);

(ii) The request for a hearing and the supporting data submitted therewith;

(iii) All documents relating to the request for certification and all documents submitted therewith; and

(iv) Correspondence and other data material to the hearing.

(2) The hearing file will be available for inspection by the applicant at the office of the Presiding Officer.

(c) An applicant may appear in person or may be represented by counsel or by any other duly authorized representative.

(d)(1) The Presiding Officer, upon the request of any party or at his or her discretion, may arrange for a prehearing conference at a time and place he/she specifies. Such prehearing conference will consider the following:

(i) Simplification of the issues;

(ii) Stipulations, admissions of fact, and the introduction of documents;

(iii) Limitation of the number of expert witnesses;

(iv) Possibility of agreement disposing of any or all of the issues in dispute; and

(v) Such other matters as may aid in the disposition of the hearing, including such additional tests as may be agreed upon by the parties.

(2) The results of the conference shall be reduced to writing by the Presiding Officer and made part of the record.

(e)(1) Hearings shall be conducted by the Presiding Officer in an informal but orderly and expeditious manner. The parties may offer oral or written evidence, subject to the exclusion by the Presiding Officer of irrelevant, immaterial, and repetitious evidence.

(2) Witnesses will not be required to testify under oath. However, the Presiding Officer shall call to the attention of witnesses that their statements may be subject to the provisions of 18 U.S.C. 1001 which imposes penalties for knowingly making false statements or

representations or using false documents in any matter within the jurisdiction of any department or agency of the United States.

(3) Any witness may be examined or cross-examined by the Presiding Officer, the parties, or their representatives.

(4) Hearings shall be reported verbatim. Copies of transcripts of proceedings may be purchased by the applicant from the reporter.

(5) All written statements, charts, tabulations, and similar data offered in evidence at the hearings shall, upon a showing satisfactory to the Presiding Officer of their authenticity, relevancy, and materiality, be received in evidence and shall constitute a part of the record.

(6) Oral argument may be permitted at the discretion of the Presiding Officer and shall be reported as part of the record unless otherwise ordered by the Presiding Officer.

(f)(1) The Presiding Officer shall make an initial decision which shall include written findings and conclusions and the reasons or basis regarding all the material issues of fact, law, or discretion presented on the record. The findings, conclusions, and written decision shall be provided to the parties and made a part of the record. The initial decision shall become the decision of the Administrator without further proceedings, unless there is an appeal to the Administrator or motion for review by the Administrator within 20 days of the date the initial decision was filed. If the Administrator has determined under paragraph (a) of this section that the decision of the Presiding Officer is final, there is no right of appeal to the Administrator.

(2) On appeal from or review of the initial decision, the Administrator shall have all the powers which he or she would have in making the initial decision, including the discretion to require or allow briefs, oral argument, the taking of additional evidence, or the remanding to the Presiding Officer for additional proceedings. The decision by the Administrator may adopt the original decision or shall include written findings and conclusions and the reasons or basis therefor on all the material issues of fact, law, or discretion presented on the appeal or considered in the review.

[59 FR 31335, June 17, 1994. Redesignated at 63 FR 56995, Oct. 23, 1998]

§ 89.129 Right of entry.

(a) Any manufacturer who has applied for certification of a new engine or engine family subject to certification testing under this subpart shall admit or cause to be admitted to any of the following facilities during operating hours any EPA enforcement officer or EPA authorized representative on presentation of credentials.

(1) Any facility where any such certification testing or any procedures or activities connected with such certification testing are or were performed;

(2) Any facility where any new engine which is being, was, or is to be tested is present;

(3) Any facility where any construction process or assembly process used in the modification or buildup of such an engine into a certification engine is taking place or has taken place; and

(4) Any facility where any record or other document relating to any of the above is located.

(b) Upon admission to any facility referred to in paragraph (a)(1) of this section, any EPA enforcement officer or EPA authorized representative shall be allowed:

(1) To inspect and monitor any part or aspect of such procedures, activities, and testing facilities, including, but not limited to, monitoring engine preconditioning, emission tests and service accumulation, maintenance, and engine storage procedures, and to verify correlation or calibration of test equipment;

(2) To inspect and make copies of any such records, designs, or other documents; and

(3) To inspect and photograph any part or aspect of any such certification engine and any components to be used in the construction thereof.

(c) To allow the Administrator to determine whether production engines conform in all material respects to the design specifications applicable to those engines, as described in the application for certification for which a certificate of conformity has been issued, any manufacturer shall admit any EPA

enforcement officer or EPA authorized representative on presentation of credentials to:

(1) Any facility where any document, design, or procedure relating to the translation of the design and construction of engines and emission-related components described in the application for certification or used for certification testing into production engines is located or carried on; and

(2) Any facility where any engines to be introduced into commerce are manufactured or assembled.

(d) On admission to any such facility referred to in paragraph (c) of this section, any EPA enforcement officer or EPA authorized representative shall be allowed:

(1) To inspect and monitor any aspects of such manufacture or assembly and other procedures;

(2) To inspect and make copies of any such records, documents or designs; and

(3) To inspect and photograph any part or aspect of any such new engines and any component used in the assembly thereof that are reasonably related to the purpose of his or her entry.

(e) Any EPA enforcement officer or EPA authorized representative shall be furnished by those in charge of a facility being inspected with such reasonable assistance as he or she may request to help the enforcement officer or authorized representative discharge any function listed in this paragraph. Each applicant for or recipient of certification is required to cause those in charge of a facility operated for its benefit to furnish such reasonable assistance without charge to EPA whether or not the applicant controls the facility.

(1) Reasonable assistance includes, but is not limited to, clerical, copying, interpretation and translation services; the making available on request of personnel of the facility being inspected during their working hours to inform the EPA enforcement officer or EPA authorized representative of how the facility operates and to answer the officer's questions; and the performance on request of emission tests on any engine which is being, has been, or will be used for certification testing. Such tests shall be nondestructive, but may require appropriate service accumulation.

(2) A manufacturer may be compelled to cause any employee at a facility being inspected to appear before an EPA enforcement officer or EPA authorized representative. The request for the employee's appearance shall be in writing, signed by the Assistant Administrator for Air and Radiation, and served on the manufacturer. Any employee who has been instructed by the manufacturer to appear will be entitled to be accompanied, represented, and advised by counsel.

(f) The duty to admit or cause to be admitted any EPA enforcement officer or EPA authorized representative applies whether or not the applicant owns or controls the facility in question and applies both to domestic and to foreign manufacturers and facilities. EPA will not attempt to make any inspections which it has been informed that local law forbids. However, if local law makes it impossible to do what is necessary to ensure the accuracy of data generated at a facility, no informed judgment that an engine is certifiable or is covered by a certificate can properly be based on those data. It is the responsibility of the manufacturer to locate its testing and manufacturing facilities in jurisdictions where this situation will not arise.

(g) Any entry without 24 hours prior written or oral notification to the affected manufacturer shall be authorized in writing by the Assistant Administrator for Enforcement.

[59 FR 31335, June 17, 1994. Redesignated at 63 FR 56995, Oct. 23, 1998]

§ 89.130 Rebuild practices.

The provisions of 40 CFR 1068.120 apply to rebuilding of engines subject to the requirements of this part 89, except Tier 1 engines rated at or above 37 kW.

[70 FR 40445, July 13, 2005]

Subpart C—Averaging, Banking, and Trading Provisions

§ 89.201 Applicability.

Nonroad compression-ignition engines subject to the provisions of subpart A of this part are eligible to participate in the averaging, banking, and trading program described in this subpart. To the extent specified in 40 CFR part 60, subpart IIII, stationary engines certified under this part and subject to the standards of 40 CFR part 60, subpart IIII, may participate in the averaging, banking, and trading program described in this subpart.

[71 FR 39184, July 11, 2006]

§ 89.202 Definitions.

The definitions in subpart A of this part apply to this subpart. The following definitions also apply to this subpart:

Averaging for nonroad engines means the exchange of emission credits among engine families within a given manufacturer's product line.

Banking means the retention of nonroad engine emission credits by the manufacturer generating the emission credits for use in future model year averaging or trading as permitted by these regulations.

Emission credits represent the amount of emission reduction or exceedance, by a nonroad engine family, below or above the emission standard, respectively. Emission reductions below the standard are considered as ''positive credits,'' while emission exceedances above the standard are considered as ''negative credits.'' In addition, ''projected credits'' refer to emission credits based on the projected applicable production/sales volume of the engine family. ''Reserved credits'' are emission credits generated within a model year waiting to be reported to EPA at the end of the model year. ''Actual credits'' refer to emission credits based on actual applicable production/sales volume as contained in the end-of-year reports submitted to EPA. Some or all of these credits may be revoked if EPA review of the end-of-year reports or any subsequent audit action(s) uncovers problems or errors.

Trading means the exchange of nonroad engine emission credits between manufacturers.

[59 FR 31335, June 17, 1994. Redesignated at 63 FR 56995, Oct. 23, 1998]

§ 89.203 General provisions.

(a) The averaging, banking, and trading programs for NO_X. NMHC+NO_X. and PM emissions from eligible nonroad engines are described in this subpart. Participation in these programs is voluntary.

(b) *Requirements for Tier 1 engines rated at or above 37 kW.* (1) A nonroad engine family is eligible to participate in the averaging, banking, and trading program for NO_X emissions and the banking and trading program for PM emissions if it is subject to regulation under subpart B of this part with certain exceptions specified in paragraph (b)(2) of this section. No averaging, banking, and trading program is available for meeting the Tier 1 HC, CO, or smoke emission standards specified in subpart B of this part. No averaging program is available for meeting the Tier 1 PM emission standards specified in subpart B of this part.

(2) Nonroad engines may not participate in the averaging, banking, and trading programs if they are exported or are sold as Blue Sky Series engines as described in § 89.112(f). Nonroad engines certified on a special test procedure under § 89.114(a), may not participate in the averaging, banking and trading programs unless the manufacturer has requested that the engines be included in the averaging, banking, and trading programs at the time the request for the special test procedure is made and has been granted approval by the Administrator for inclusion in the averaging, banking, and trading programs.

(3) A manufacturer may certify one or more nonroad engine families at NO_X family emission limits (FELs) above or below the Tier 1 NO_X emission standard, provided the summation of the manufacturer's projected balance of all NO_X credit transactions in a given model year is greater than or equal to zero, as determined under § 89.207(a). A manufacturer may certify one or more nonroad engine families at PM FELs below the Tier 2 PM emission

standard that will be applicable to those engine families.

(i) FELs for NO_X may not exceed the Tier 1 upper limit specified in § 89.112(d).

(ii) An engine family certified to an FEL is subject to all provisions specified in this part, except that the applicable FEL replaces the emission standard for the family participating in the averaging, banking, and trading program.

(iii) A manufacturer of an engine family with a NO_X FEL exceeding the Tier 1 NO_X emission standard must obtain NO_X emission credits sufficient to address the associated credit shortfall via averaging, banking, or trading.

(iv) An engine family with a NO_X FEL below the applicable Tier 1 standard may generate emission credits for averaging, banking, trading, or a combination thereof. An engine family with a PM FEL below the Tier 2 standard that will be applicable to that engine family may generate emission credits for banking, trading, or a combination thereof. Emission credits may not be used to offset an engine family's emissions that exceed its applicable FEL. Credits may not be used to remedy nonconformity determined by a Selective Enforcement Audit (SEA) or by recall (in-use) testing. However, in the case of an SEA failure, credits may be used to allow subsequent production of engines for the family in question if the manufacturer elects to recertify to a higher FEL.

(4) NO_X credits generated in a given model year may be used to address credit shortfalls with other engines during that model year or in any subsequent model year except as noted under paragraph (b)(5)(ii) of this section. PM credits may be used to address credit shortfalls with Tier 2 and later engines greater than or equal to 37 kW and Tier 1 and later engines less than 37 kW and greater than or equal to 19 kW. Credits generated in one model year may not be used for prior model years.

(5) The following provisions apply to the use of Tier 1 NO_X credits for showing compliance with the Tier 2 or Tier 3 NMHC+NO_X standards.

(i) A manufacturer may use NO_X credits from engines subject to the Tier 1 NO_X standard to address NMHC+NO_X credit shortfalls with engines in the same averaging set subject to Tier 1 NMHC+NO_X or Tier 2 NMHC+NO_X emission standards.

(ii) A manufacturer may not use NO_X credits from engines subject to the Tier 1 standards to address NMHC+NO_X credit shortfalls with engines subject to the Tier 3 NMHC+NO_X emission standards.

(c) *Requirements for Tier 2 and later engines rated at or above 37 kW and Tier 1 and later engines rated under 37 kW.* (1) A nonroad engine family is eligible to participate in the averaging, banking, and trading programs for NMHC+NO_X emissions and PM emissions if it is subject to regulation under subpart B of this part with certain exceptions specified in paragraph (c)(2) of this section. No averaging, banking, and trading program is available for meeting the CO or smoke emission standards specified in subpart B of this part.

(2) Nonroad engines may not participate in the averaging, banking, and trading programs if they are exported or are sold as Blue Sky Series engines as described in § 89.112(f). Nonroad engines certified on a special test procedure under § 89.114(a), may not participate in the averaging, banking and trading programs unless the manufacturer has requested that the engines be included in the averaging, banking, and trading programs at the time the request for the special test procedure is made and has been granted approval by the Administrator for inclusion in the averaging, banking, and trading programs.

(3)(i) A manufacturer may certify one or more nonroad engine families at FELs above or below the applicable NMHC+NO_X emission standard and PM emission standard, provided the summation of the manufacturer's projected balance of all NMHC+NO_X credit transactions and the summation of the manufacturer's projected balance of all PM credit transactions in a given model year in a given averaging set is greater than or equal to zero, as determined under § 89.207(b).

(A) FELs for NMHC+NO_X and FELs for PM may not exceed the upper limits specified in § 89.112(d).

(B) An engine family certified to an FEL is subject to all provisions specified in this part, except that the applicable FEL replaces the emission standard for the family participating in the averaging, banking, and trading program.

(C) A manufacturer of an engine family with an FEL exceeding the applicable emission standard must obtain emission credits sufficient to address the associated credit shortfall via averaging, banking, or trading, within the restrictions described in § 89.204(c) and § 89.206(b)(4).

(D) An engine family with an FEL below the applicable standard may generate emission credits for averaging, banking, trading, or a combination thereof. Emission credits may not be used to offset an engine family's emissions that exceed its applicable FEL. Credits may not be used to remedy nonconformity determined by a Selective Enforcement Audit (SEA) or by recall (in-use) testing. However, in the case of an SEA failure, credits may be used to allow subsequent production of engines for the family in question if the manufacturer elects to recertify to a higher FEL.

(ii)(A) In lieu of generating credits under paragraph (c)(3)(i) of this section, a manufacturer may certify one or more nonroad engine families rated under 37 kW at family emission limits (FELs) above or below the applicable NMHC+NO_X emission standard and PM emission standard. The summation of the manufacturer's projected balance of all NMHC+NO_X credit transactions and the summation of the manufacturer's projected balance of all PM credit transactions in a given model year, as determined under § 89.207(b), are each allowed to be less than zero. Separate calculations shall be required for the following two categories of engines: engines rated under 19 kW and engines rated at or above 19 kW and under 37 kW.

(B) For each calendar year a negative credit balance exists as of December 31, a penalty equal to ten percent of the negative credit balance as of December 31 of the calendar year shall be added to the negative credit balance. The resulting negative credit balance shall be carried into the next calendar year.

(C) For engines rated under 19 kW, a manufacturer will be allowed to carry over a negative credit balance until December 31, 2003. For engines rated at or above 19 kW and under 37 kW, a manufacturer will be allowed to carry over a negative credit balance until December 31, 2002. As of these dates, the summation of the manufacturer's projected balance of all NMHC+NO_X credit transactions and the summation of the manufacturer's projected balance of all PM credit transactions must each be greater than or equal to zero.

(D) FELs for NMHC+NO_X and FELs for PM may not exceed the upper limits specified in § 89.112(d).

(E) An engine family certified to an FEL is subject to all provisions specified in this part, except that the applicable NMHC+NO_X FEL or PM FEL replaces the NMHC+NO_X emission standard or PM emission standard for the family participating in the averaging and banking program.

(F) A manufacturer of an engine family with an FEL exceeding the applicable emission standard must obtain emission credits sufficient to address the associated credit shortfall via averaging or banking. The exchange of emission credits generated under this program with other nonroad engine manufacturers in trading is not allowed.

(G) An engine family with an FEL below the applicable standard may generate emission credits for averaging, banking, or a combination thereof. Emission credits may not be used to offset an engine family's emissions that exceed its applicable FEL. Credits may not be used to remedy nonconformity determined by a Selective Enforcement Audit (SEA) or by recall (in-use) testing. However, in the case of an SEA failure, credits may be used to allow subsequent production of engines for the family in question if the manufacturer elects to recertify to a higher FEL.

(4)(i) Except as noted in paragraphs (c)(4)(ii), (c)(4)(iii), and (c)(4)(iv) of this section, credits generated in a given model year may be used during that model year or used in any subsequent model year. Except as allowed under paragraph (c)(3)(ii) of this section,

credits generated in one model year may not be used for prior model years.

(ii) Credits generated from engines rated under 19 kW prior to the implementation date of the applicable Tier 2 standards, shall expire on December 31, 2007.

(iii) Credits generated from engines rated under 19 kW under the provisions of paragraph (c)(3)(ii) shall expire on December 31, 2003.

(iv) Credits generated from engines rated at or above 19 kW and under 37 kW under the provisions of paragraph (c)(3)(ii) of this section shall expire on December 31, 2002.

(5) Except as provided in paragraph (b)(3) of this section, engine families may not generate credits for one pollutant while also using credits for another pollutant in the same model year.

(6) Model year 2008 and 2009 engines rated under 8 kW that are allowed to certify under this part because they meet the criteria in 40 CFR 1039.101(c) may not generate emission credits.

(d) Manufacturers must demonstrate compliance under the averaging, banking, and trading programs for a particular model year within 270 days of the end of the model year. Except as allowed under paragraph (c)(3)(ii) of this section, manufacturers that have certified engine families to FELs above the applicable emission standards and do not have sufficient emission credits to offset the difference between the emission standards and the FEL for such engine families will be in violation of the conditions of the certificate of conformity for such engine families. The certificates of conformity may be voided ab initio under § 89.126(c) for those engine families.

[63 FR 57006, Oct. 23, 1998, as amended at 69 FR 39213, June 29, 2004]

§ 89.204 Averaging.

(a) *Requirements for Tier 1 engines rated at or above 37 kW.* A manufacturer may use averaging to offset an emission exceedance of a nonroad engine family caused by a NO_X FEL above the applicable emission standard. NO_X credits used in averaging may be obtained from credits generated by another engine family in a previous model year, credits banked in the same model year, or credits obtained through trading.

(b) *Requirements for Tier 2 and later engines rated at or above 37 kW and Tier 1 and later engines rated under 37 kW.* A manufacturer may use averaging to offset an emission exceedance of a nonroad engine family caused by an NMHC+;NO_X FEL or a PM FEL above the applicable emission standard. Credits used in averaging may be obtained from credits generated by another engine family in the same model year, credits banked in previous model years that have not expired, or credits obtained through trading. The use of credits shall be within the restrictions described in paragraph (c) of this section, § 89.206(b)(4) and § 89.203(b)(5)(ii).

(c) *Averaging sets for emission credits.* The averaging and trading of NO_X emission credits, NMHC + NO_X emission credits, and PM emissions credits will only be allowed between engine families in the same averaging set. The averaging sets for the averaging and trading of NO_X emission credits, NMHC + NO_X emission credits, and PM emission credits for nonroad engines are defined as follows:

(1) Eligible engines rated at or above 19 kW, other than marine diesel engines, constitute an averaging set.

(2) Eligible engines rated under 19 kW, other than marine diesel engines, constitute an averaging set.

(3) Marine diesel engines rated at or above 19 kW constitute an averaging set. Emission credits generated from marine diesel engines rated at or above 19 kW may be used to address credit shortfalls for eligible engines rated at or above 19 kW other than marine diesel engines.

(4) Marine diesel engines rated under 19 kW constitute an averaging set. Emission credits generated from marine diesel engines rated under 19 kW may be used to address credit shortfalls for eligible engines rated under 19 kW other than marine diesel engines.

[63 FR 57007, Oct. 23, 1998]

§ 89.205 Banking.

(a) *Requirements for Tier 1 engines rated at or above 37 kW.* (1) A manufacturer of a nonroad engine family with a NO_X FEL below the applicable standard

for a given model year may bank credits in that model year for use in averaging and trading in any subsequent model year.

(2) A manufacturer of a nonroad engine family may bank NO_X credits up to one calendar year prior to the effective date of mandatory certification. Such engines must meet the requirements of subparts A, B, D, E, F, G, H, I, J, and K of this part.

(3)(i) A manufacturer of a nonroad engine family may bank PM credits from Tier 1 engines under the provisions specified in § 89.207(b) for use in averaging and trading in the Tier 2 or later timeframe. These credits are considered to be Tier 2 credits.

(ii) Such engine families are subject to all provisions specified in subparts A, B, D, E, F, G, H, I, J, and K of this part, except that the applicable PM FEL replaces the PM emission standard for the family participating in the banking and trading program.

(b) *Requirements for Tier 2 and later engines rated at or above 37 kW and Tier 1 and later engines rated under 37 kW.* (1) A manufacturer of a nonroad engine family with an NMHC + NO_X FEL or a PM FEL below the applicable standard for a given model year may bank credits in that model year for use in averaging and trading in any following model year.

(2) For engine rated under 37 kW, a manufacturer of a nonroad engine family may bank credits prior to the effective date of mandatory certification. Such engines must meet the requirements of subparts A, B, D, E, F, G, H, I, J, and K of this part.

(c) A manufacturer may bank actual credits only after the end of the model year and after EPA has reviewed the manufacturer's end-of-year reports. During the model year and before submittal of the end-of-year report, credits originally designated in the certification process for banking will be considered reserved and may be redesignated for trading or averaging in the end-of-year report and final report.

(d) Credits declared for banking from the previous model year that have not been reviewed by EPA may be used in averaging or trading transactions. However, such credits may be revoked at a later time following EPA review of the end-of-year report or any subsequent audit actions.

[63 FR 57008, Oct. 23, 1998, as amended at 72 FR 53129, Sept. 18, 2007]

§ 89.206 Trading.

(a) *Requirements for Tier 1 engines rated at or above 37 kW.* (1) A nonroad engine manufacturer may exchange emission credits with other nonroad engine manufacturers within the same averaging set in trading.

(2) Credits for trading can be obtained from credits banked in a previous model year or credits generated during the model year of the trading transaction.

(3) Traded credits can be used for averaging, banking, or further trading transactions within the restrictions described in § 89.204(c).

(b) *Requirements for Tier 2 and later engines rated at or above 37 kW and Tier 1 and later engines rated under 37 kW.* (1) A nonroad engine manufacturer may exchange emission credits with other nonroad engine manufacturers within the same averaging set in trading.

(2) Credits for trading can be obtained from credits banked in previous model years that have not expired or credits generated during the model year of the trading transaction.

(3) Traded credits can be used for averaging, banking, or further trading transactions within the restrictions described in § 89.204(c) and paragraph (b)(4) of this section.

(4) Emission credits generated from engines rated at or above 19 kW utilizing indirect fuel injection may not be traded to other manufacturers.

(c) In the event of a negative credit balance resulting from a transaction, both the buyer and the seller are liable, except in cases deemed involving fraud. Certificates of all engine families participating in a negative trade may be voided ab initio under § 89.126(c).

[63 FR 57008, Oct. 23, 1998]

§ 89.207 Credit calculation.

(a) *Requirements for calculating NO_X credits from Tier 1 engines rated at or above 37 kW.* (1) For each participating engine family, emission credits (positive or negative) are to be calculated

according to one of the following equations and rounded, in accordance with ASTM E29–93a, to the nearest one-hundredth of a megagram (Mg). This ASTM procedure has been incorporated by reference (see § 89.6). Consistent units are to be used throughout the equation.

(i) For determining credit availability from all engine families generating credits: Emission credits = (Std − FEL) × (Volume) × (AvgPR) × (UL) × (Adjustment) × (10^{-6})

(ii) For determining credit usage for all engine families requiring credits to offset emissions in excess of the standard:

Emission credits = (Std − FEL) × (Volume) × (AvgPR) × (UL) × (10^{-6})

Where:

Std = the applicable Tier 1 NO_X nonroad engine emission standard, in grams per kilowatt-hour.

FEL = the NO_X family emission limit for the engine family in grams per kilowatt-hour.

Volume = the number of nonroad engines eligible to participate in the averaging, banking, and trading program within the given engine family during the model year. Engines sold to equipment or vehicle manufacturers under the provisions of § 89.102(g) shall not be included in this number. Quarterly production projections are used for initial certification. Actual applicable production/sales volume is used for end-of-year compliance determination.

AvgPR = the average power rating of all of the configurations within an engine family, calculated on a sales-weighted basis, in kilowatts.

UL = the useful life for the engine family, in hours.

Adjustment = a one-time adjustment, as specified in paragraph (a)(2) of this section, to be applied to Tier 1 NO_X credits to be banked or traded for determining compliance with the Tier 1 NO_X standards or Tier 2 NO_X+NMHC standards specified in subpart B of this part. Banked credits traded in a subsequent model year will not be subject to an additional adjustment. Banked credits used in a subsequent model year's averaging program will not have the adjustment restored.

(2) If an engine family is certified to a NO_X FEL of 8.0 g/kW-hr or less, an Adjustment value of 1.0 shall be used in the credit generation calculation described in paragraph (a)(1)(i) of this section. If an engine family is certified to a NO_X FEL above 8.0 g/kW-hr, an Adjustment value of 0.65 shall be used in the credit generation calculation described in paragraph (a)(1)(i) of this section. If the credits are to be used by the credit-generating manufacturer for averaging purposes in the same model year in which they are generated, an Adjustment value of 1.0 shall be used for all engines regardless of the level of the NO_X FEL. If the credits are to be banked by the credit-generating manufacturer and used in a subsequent model year for another Tier 1 engine family, an Adjustment value of 1.0 shall be used for all engines regardless of the level of the NO_X FEL.

(b) *Requirements for calculating NMHC + NO_X Credits from Tier 2 and later engines rated at or above 37 kW and Tier 1 and later engines rated under 37 kW and PM credits from all engines.* (1) For each participating engine family, NO_X + NMHC emission credits and PM emission credits (positive or negative) are to be calculated according to one of the following equations and rounded, in accordance with ASTM E29–93a, to the nearest one-hundredth of a megagram (Mg). This procedure has been incorporated by reference (see § 89.6). Consistent units are to be used throughout the equation.

(i) For determining credit availability from all engine families generating credits:

Emission credits = (Std-FEL) × (Volume) × (AvgPR) × (UL) × (10^{-6})

(ii) For determining credit usage for all engine families requiring credits to offset emissions in excess of the standard:

Emission credits = (Std-FEL) × (Volume) × (AvgPR) × (UL) × (10^{-6})

Where:

Std = the current and applicable nonroad engine emission standard, in grams per kilowatt-hour, except for PM calculations where it is the applicable nonroad engine Tier 2 PM emission standard, and except for engines rated under 19 kW where it is the applicable nonroad engine Tier 2 emission standard, in grams per kilowatt-hour. (Engines rated under 19 kW participating in the averaging and banking program provisions of § 89.203(c)(3)(ii) shall use the Tier 1 standard for credit calculations.)

FEL = the family emission limit for the engine family in grams per kilowatt-hour.

Volume = the number of nonroad engines eligible to participate in the averaging, banking, and trading program within the given engine family during the model year. Engines sold to equipment or vehicle manufacturers under the provisions of § 89.102(g) shall not be included in this number. Quarterly production projections are used for initial certification. Actual applicable production/sales volume is used for end-of-year compliance determination.

AvgPR = the average power rating of all of the configurations within an engine family, calculated on a sales-weighted basis, in kilowatts.

UL = the useful life for the given engine family, in hours.

[63 FR 57008, Oct. 23, 1998]

§ 89.208 Labeling.

For all nonroad engines included in the averaging, banking, and trading programs, the family emission limits to which the engine is certified must be included on the label required in § 89.110.

[63 FR 57009, Oct. 23, 1998]

§ 89.209 Certification.

(a) In the application for certification a manufacturer must:

(1) Declare its intent to include specific engine families in the averaging, banking, and trading programs.

(2) Submit a statement that the engines for which certification is requested will not, to the best of the manufacturer's belief, cause the manufacturer to have a negative credit balance when all credits are calculated for all the manufacturer's engine families participating in the averaging, banking, and trading programs, except as allowed under § 89.203(c)(3)(ii).

(3) Declare the applicable FELs for each engine family participating in averaging, banking, and trading.

(i) The FELs must be to the same number of significant digits as the emission standard for the applicable pollutant.

(ii) In no case may the FEL exceed the upper limits prescribed in § 89.112(d).

(4) Indicate the projected number of credits generated/needed for this family; the projected applicable production/sales volume, by quarter; and the values required to calculate credits as given in § 89.207.

(5) Submit calculations in accordance with § 89.207 of projected emission credits (positive or negative) based on quarterly production projections for each participating family.

(6)(i) If the engine family is projected to have negative emission credits, state specifically the source (manufacturer/engine family or reserved) of the credits necessary to offset the credit deficit according to quarterly projected production, or, if the engine family is to be included in the provisions of § 89.203(c)(3)(ii), state that the engine family will be subject to those provisions.

(ii) If the engine family is projected to generate credits, state specifically (manufacturer/engine family or reserved) where the quarterly projected credits will be applied.

(b) All certificates issued are conditional upon manufacturer compliance with the provisions of this subpart both during and after the model year of production.

(c) Failure to comply with all provisions of this subpart will be considered to be a failure to satisfy the conditions upon which the certificate was issued, and the certificate may be deemed void ab initio.

(d) The manufacturer bears the burden of establishing to the satisfaction of the Administrator that the conditions upon which the certificate was issued were satisfied or waived.

(e) Projected credits based on information supplied in the certification application may be used to obtain a certificate of conformity. However, any such credits may be revoked based on review of end-of-year reports, follow-up audits, and any other verification steps deemed appropriate by the Administrator.

[59 FR 31335, June 17, 1994. Redesignated and amended at 63 FR 56995, 57009, Oct. 23, 1998]

§ 89.210 Maintenance of records.

(a) The manufacturer of any nonroad engine that is certified under the averaging, banking, and trading program must establish, maintain, and retain the following adequately organized and indexed records for each such engine produced:

(1) EPA engine family;

(2) Engine identification number;

(3) Engine model year and build date,

(4) Power rating;

(5) Purchaser and destination; and

(6) Assembly plant.

(b) The manufacturer of any nonroad engine family that is certified under the averaging, banking, and trading programs must establish, maintain, and retain the following adequately organized and indexed records for each such family:

(1) EPA engine family;

(2) Family emission limits (FEL);

(3) Power rating for each configuration tested;

(4) Projected applicable production/sales volume for the model year; and

(5) Actual applicable production/sales volume for the model year.

(c) Any manufacturer producing an engine family participating in trading reserved credits must maintain the following records on a quarterly basis for each engine family in the trading program:

(1) The engine family;

(2) The actual quarterly and cumulative applicable production/sales volume;

(3) The values required to calculate credits as given in § 89.207;

(4) The resulting type and number of credits generated/required;

(5) How and where credit surpluses are dispersed; and

(6) How and through what means credit deficits are met.

(d) The manufacturer must retain all records required to be maintained under this section for a period of eight years from the due date for the end-of-model-year report. Records may be retained as hard copy or reduced to microfilm, ADP diskettes, and so forth, depending on the manufacturer's record retention procedure; provided, that in every case all information contained in the hard copy is retained.

(e) Nothing in this section limits the Administrator's discretion in requiring the manufacturer to retain additional records or submit information not specifically required by this section.

(f) Pursuant to a request made by the Administrator, the manufacturer must submit to the Administrator the information that the manufacturer is required to retain.

(g) EPA may void ab initio under § 89.126(c) a certificate of conformity for an engine family for which the manufacturer fails to retain the records required in this section or to provide such information to the Administrator upon request.

[59 FR 31335, June 17, 1994. Redesignated and amended at 63 FR 56995, 57009, Oct. 23, 1998]

§ 89.211 End-of-year and final reports.

(a) End-of-year and final reports must indicate the engine family, the actual applicable production/sales volume, the values required to calculate credits as given in § 89.207, and the number of credits generated/required. Manufacturers must also submit how and where credit surpluses were dispersed (or are to be banked) and/or how and through what means credit deficits were met. Copies of contracts related to credit trading must be included or supplied by the broker, if applicable. The report shall include a calculation of credit balances to show that the summation of the manufacturer's use of credits results in a credit balance equal to or greater than zero, except as allowed under § 89.203(c)(3)(ii). Manufacturers participating under the program described in § 89.203(c)(3)(ii) shall include the NMHC + NO_X credit balance and the PM credit balance as of December 31 of that calendar year.

(b) The applicable production/sales volume for end-of-year and final reports must be based on the location of the point of first retail sale (for example, retail customer, dealer, secondary manufacturer) also called the final product purchase location.

(c)(1) End-of-year reports must be submitted within 90 days of the end of the model year to: Director, Engine Programs and Compliance Division (6405-J), U.S. Environmental Protection Agency, 401 M St., SW., Washington, DC 20460.

(2) Final reports must be submitted within 270 days of the end of the model year to: Director, Engine Programs and Compliance Division (6405-J), U.S. Environmental Protection Agency, 401 M St., SW., Washington, DC 20460.

(d) Failure by a manufacturer participating in the averaging, banking, or trading program to submit any end-of-year or final reports in the specified

time for all engines is a violation of sections 203(a)(1) and 213 of the Clean Air Act for each engine.

(e) A manufacturer generating credits for deposit only who fails to submit end-of-year reports in the applicable specified time period (90 days after the end of the model year) may not use the credits until such reports are received and reviewed by EPA. Use of projected credits pending EPA review is not permitted in these circumstances.

(f) Errors discovered by EPA or the manufacturer in the end-of-year report, including errors in credit calculation, may be corrected in the final report up to 270 days from the end of the model year.

(g) If EPA or the manufacturer determines that a reporting error occurred on an end-of-year or final report previously submitted to EPA under this section, the manufacturer's credits and credit calculations will be recalculated. Erroneous positive credits will be void except as provided in paragraph (h) of this section. Erroneous negative credit balances may be adjusted by EPA.

(h) If within 270 days of the end of the model year, EPA review determines a reporting error in the manufacturer's favor (that is, resulting in an increased credit balance) or if the manufacturer discovers such an error within 270 days of the end of the model year, the credits shall be restored for use by the manufacturer.

[59 FR 31335, June 17, 1994. Redesignated and amended at 63 FR 56995, 57009, Oct. 23, 1998]

§ 89.212 Notice of opportunity for hearing.

Any voiding of the certificate under §§ 89.203(d), 89.206(c), 89.209(c) or 89.210(g) will be made only after the manufacturer concerned has been offered an opportunity for a hearing conducted in accordance with §§ 89.512 and 89.513 and, if a manufacturer requests such a hearing, will be made only after an initial decision by the Presiding Officer.

[63 FR 57010, Oct. 23, 1998]

Subpart D—Emission Test Equipment Provisions

§ 89.301 Scope; applicability.

(a) This subpart describes the equipment required in order to perform exhaust emission tests on new nonroad compression-ignition engines subject to the provisions of subpart B of part 89.

(b) Exhaust gases, either raw or dilute, are sampled while the test engine is operated using an 8-mode test cycle on an engine dynamometer. The exhaust gases receive specific component analysis determining concentration of pollutant, exhaust volume, the fuel flow, and the power output during each mode. Emission is reported as grams per kilowatt hour (g/kw-hr). See subpart E of this part for a complete description of the test procedure.

(c) General equipment and calibration requirements are given in § 89.304 through 89.324. Sections 89.325 through 89.331 set forth general test specifications.

(d) Additional information about system design, calibration methodologies, and so forth, for raw gas sampling can be found in 40 CFR part 1065. Examples for system design, calibration methodologies, and so forth, for dilute exhaust gas sampling can be found in 40 CFR part 1065.

[59 FR 31335, June 17, 1994. Redesignated at 63 FR 56995, Oct. 23, 1998, as amended at 70 FR 40445, July 13, 2005]

§ 89.302 Definitions.

The definitions in subpart A of this part apply to this subpart. For terms not defined in this part, the definitions in 40 CFR part 86, subparts A, D, I, and N, apply to this subpart.

[63 FR 57010, Oct. 23, 1998]

§ 89.303 Symbols/abbreviations.

(a) The abbreviations in § 86.094–3 or part 89.3 of this chapter apply to this subpart.

(b) The abbreviations in table 1 in appendix A of this subpart apply to this subpart. Some abbreviations from § 89.3 have been included for the convenience of the reader.

(c) The symbols in table 2 in appendix A of this subpart apply to this subpart.

[59 FR 31335, June 17, 1994. Redesignated at 63 FR 56995, Oct. 23, 1998]

§ 89.304 Equipment required for gaseous emissions; overview.

(a) All engines subject to this subpart are tested for exhaust emissions. Engines are operated on dynamometers meeting the specification given in § 89.306.

(b) The exhaust is tested for gaseous emissions using a raw gas sampling system as described in § 89.412 or a constant volume sampling (CVS) system as described in § 89.419. Both systems require analyzers (see paragraph (c) of this section) specific to the pollutant being measured.

(c) Analyzers used are a non-dispersive infrared (NDIR) absorption type for carbon monoxide and carbon dioxide analysis; a heated flame ionization (HFID) type for hydrocarbon analysis; and a chemiluminescent detector (CLD) or heated chemiluminescent detector (HCLD) for oxides of nitrogen analysis. Sections 89.309 through 89.324 set forth a full description of analyzer requirements and specifications.

[59 FR 31335, June 17, 1994. Redesignated and amended at 63 FR 56995, 57010, Oct. 23, 1998]

§ 89.305 Equipment measurement accuracy/calibration frequency.

The accuracy of measurements must be such that the maximum tolerances shown in Table 3 in appendix A of this subpart are not exceeded. Calibrate all equipment and analyzers according to the frequencies shown in Table 3 in appendix A of this subpart.

[59 FR 31335, June 17, 1994. Redesignated at 63 FR 56995, Oct. 23, 1998]

§ 89.306 Dynamometer specifications and calibration weights.

(a) *Dynamometer specifications*. The dynamometer test stand and other instruments for measurement of power output must meet the accuracy and calibration frequency requirements shown in table 3 in appendix A of this subpart. The dynamometer must be capable of performing the test cycle described in § 89.410.

(b) *Dynamometer calibration weights*. A minimum of six calibration weights for each range used are required. The weights must be spaced to reflect good engineering judgement such that they cover the range of weights required and must be traceable to within 0.5 percent of NIST weights. Laboratories located in foreign countries may certify calibration weights to local government bureau standards.

[59 FR 31335, June 17, 1994. Redesignated at 63 FR 56995, Oct. 23, 1998]

§ 89.307 Dynamometer calibration.

(a) If necessary, follow the dynamometer manufacturer's instructions for initial start-up and basic operating adjustments.

(b) Check the dynamometer torque measurement for each range used by the following method:

(1) Warm up the dynamometer following the dynamometer manufacturer's specifications.

(2) Determine the dynamometer calibration moment arm (a distance/weight measurement). Dynamometer manufacturer's data, actual measurement, or the value recorded from the previous calibration used for this subpart may be used.

(3) When calibrating the engine flywheel torque transducer, any lever arm used to convert a weight or a force through a distance into a torque must be in a horizontal position (±5 degrees).

(4) Calculate the indicated torque (IT) for each calibration weight to be used by:

IT = calibration weight (N) × calibration moment arm (m)

(5) Attach each calibration weight specified in § 89.306 to the moment arm at the calibration distance determined in paragraph (b)(2) of this section. Record the power measurement equipment response (N − m) to each weight.

(6) For each calibration weight, compare the torque value measured in paragraph (b)(5) of this section to the calculated torque determined in paragraph (b)(4) of this section.

(7) The measured torque must be within either 2 percent of point or 1 percent of the engine maximum torque of the calculated torque.

(8) If the measured torque is not within the above requirements, adjust or repair the system. Repeat steps in paragraphs (b)(1) through (b)(6) of this section with the adjusted or repaired system.

(c) Optional. A master load-cell or transfer standard may be used to verify the torque measurement system.

(1) The master load-cell and read out system must be calibrated with weights at each test weight specified in § 89.306. The calibration weights must be traceable to within 0.1 percent of applicable national standards.

(2) Warm up the dynamometer following the equipment manufacturer's specifications.

(3) Attach the master load-cell and loading system.

(4) Load the dynamometer to a minimum of 6 equally spaced torque values as indicated by the master load-cell for each in-use range used.

(5) The in-use torque measurement must be within 2 percent of the torque measured by the master system for each load used.

(6) If the in-use torque is not within 2 percent of the master torque, adjust or repair the system. Repeat steps in paragraphs (c)(2) through (c)(5) of this section with the adjusted or repaired system.

(d) Calibrated resistors may not be used for engine flywheel torque transducer calibration, but may be used to span the transducer prior to engine testing.

(e) Perform other engine dynamometer system calibrations as dictated by good engineering practice.

[59 FR 31335, June 17, 1994. Redesignated and amended at 63 FR 56995, 57010, Oct. 23, 1998]

§ 89.308 Sampling system requirements for gaseous emissions.

(a) For each component (pump, sample line section, filters, and so forth) in the heated portion of the sampling system that has a separate source of power or heating element, use engineering judgment to locate the coolest portion of that component and monitor the temperature at that location. If several components are within an oven, then only the surface temperature of the component with the largest thermal mass and the oven temperature need be measured.

(b) If water is removed by condensation, the sample gas temperature shall be monitored within the water trap or the sample dewpoint shall be monitored downstream. In either case, the indicated temperature shall not exceed 7 °C.

[59 FR 31335, June 17, 1994. Redesignated and amended at 63 FR 56995, 57010, Oct. 23, 1998]

§ 89.309 Analyzers required for gaseous emissions.

(a) *Analyzers.* The following instruments are required for analyzing the measured gases:

(1) *Carbon Monoxide (CO) analysis.* (i) The carbon monoxide analyzer must be of the non-dispersive infrared (NDIR) absorption type.

(ii) The use of linearizing circuits is permitted.

(2) *Carbon Dioxide (CO_2) analysis.* (i) The carbon dioxide analyzer must be of the non-dispersive infrared (NDIR) absorption type.

(ii) The use of linearizing circuits is permitted.

(3) [Reserved]

(4) *Hydrocarbon (HC) analysis.* (i) The hydrocarbon analyzer must be of the heated flame ionization (HFID) type.

(ii) If the temperature of the exhaust gas at the sample probe is below 190 °C, the temperature of the valves, pipework, and so forth, must be controlled so as to maintain a wall temperature of 190 °C ±11 °C. If the temperature of the exhaust gas at the sample probe is above 190 °C, the temperature of the valves, pipework, and so forth, must be controlled so as to maintain a wall temperature greater than 180 °C.

(iii) The FID oven must be capable of maintaining temperature within 5.5 °C of the set point.

(iv) Fuel and burner air must conform to the specifications in § 89.312.

(v) The percent of oxygen interference must be less than 3 percent, as specified in § 89.319(d).

(5) *Oxides of nitrogen (NO_X) analysis.* (i) This analysis device must consist of the subsequent items, following the sample probe, in the given order:

(A) Pipework, valves, and so forth, controlled so as to maintain a wall temperature above 60 °C.

(B) A NO_2 to NO converter. The NO_2 to NO converter efficiency must be at least 90 percent.

(C) For raw analysis, an ice bath or other cooling device located after the NO_X converter (optional for dilute analysis).

(D) A chemiluminescent detector (CLD or HCLD).

(ii) The quench interference must be less than 3.0 percent as measured in § 89.318.

(b) Other gas analyzers yielding equivalent results may be used with advance approval of the Administrator.

(c) The following requirements must be incorporated in each system used for testing under this subpart.

(1) Carbon monoxide and carbon dioxide measurements must be made on a dry basis (for raw exhaust measurement only). Specific requirements for the means of drying the sample can be found in § 89.309(e).

(2) Calibration or span gases for the NO_X measurement system must pass through the NO_2 to NO converter.

(d) The electromagnetic compatibility (EMC) of the equipment must be on a level as to minimize additional errors.

(e) *Gas drying*. Chemical dryers are not an acceptable method of removing water from the sample. Water removal by condensation is acceptable. A water trap performing this function and meeting the specifications in § 89.308(b) is an acceptable method. Means other than condensation may be used only with prior approval from the Administrator.

[59 FR 31335, June 17, 1994. Redesignated and amended at 63 FR 56995, 57010, Oct. 23, 1998]

§ 89.310 Analyzer accuracy and specifications.

(a) *Measurement accuracy—general*. The analyzers must have a measuring range which allows them to measure the concentrations of the exhaust gas sample pollutants with the accuracies shown in Table 3 in Appendix A of this subpart.

(1) *Response time*. As necessary, measure and account for the response time of the analyzer.

(2) *Precision*. The precision of the analyzer must be, at worst, ±1 percent of full-scale concentration for each range used at or above 100 ppm (or ppmC) or ±2 percent for each range used below 100 ppm (or ppmC). The precision is defined as 2.5 times the standard deviation(s) of 10 repetitive responses to a given calibration or span gas.

(3) *Noise*. The analyzer peak-to-peak response to zero and calibration or span gases over any 10-second period must not exceed 2 percent of full-scale chart deflection on all ranges used.

(4) *Zero drift*. The analyzer zero-response drift during a 1-hour period must be less than 2 percent of full-scale chart deflection on the lowest range used. The zero-response is defined as the mean response including noise to a zero-gas during a 30-second time interval.

(5) *Span drift*. The analyzer span drift during a 1-hour period must be less than 2 percent of full-scale chart deflection on the lowest range used. The analyzer span is defined as the difference between the span-response and the zero-response. The span-response is defined as the mean response including noise to a span gas during a 30-second time interval.

(b) *Operating procedure for analyzers and sampling system*. Follow the start-up and operating instructions of the instrument manufacturer. Adhere to the minimum requirements given in § 89.314 to § 89.323.

(c) *Emission measurement accuracy—Bag sampling*. (1) Good engineering practice dictates that exhaust emission sample analyzer readings below 15 percent of full-scale chart deflection should generally not be used.

(2) Some high resolution read-out systems, such as computers, data loggers, and so forth, can provide sufficient accuracy and resolution below 15 percent of full scale. Such systems may be used provided that additional calibrations of at least 4 non-zero nominally equally spaced points, using good engineering judgement, below 15 percent of full scale are made to ensure the accuracy of the calibration curves. If a gas divider is used, the gas divider must conform to the accuracy requirements specified in § 89.312(c). The procedure in paragraph (c)(3) of this section may be used for calibration below 15 percent of full scale.

(3) The following procedure shall be followed:

(i) Span the analyzer using a calibration gas meeting the accuracy requirements of § 89.312(c), within the operating range of the analyzer, and at least 90% of full scale.

(ii) Generate a calibration over the full concentration range at a minimum of 6, approximately equally spaced, points (e.g. 15, 30, 45, 60, 75, and 90 percent of the range of concentrations provided by the gas divider). If a gas divider or blender is being used to calibrate the analyzer and the requirements of paragraph (c)(2) of this section are met, verify that a second calibration gas between 10 and 20 percent of full scale can be named within 2 percent of its certified concentration.

(iii) If a gas divider or blender is being used to calibrate the analyzer, input the value of a second calibration gas (a span gas may be used for the CO2 analyzer) having a named concentration between 10 and 20 percent of full scale. This gas shall be included on the calibration curve. Continue adding calibration points by dividing this gas until the requirements of paragraph (c)(2) of this section are met.

(iv) Fit a calibration curve per § 89.319 through § 89.322 for the full scale range of the analyzer using the calibration data obtained with both calibration gases.

(d) *Emission measurement accuracy—continuous sampling*. Analyzers used for continuous analysis must be operated such that the measured concentration falls between 15 and 100 percent of full-scale chart deflection. Exceptions to these limits are:

(1) The analyzer's response may be less than 15 percent or more than 100 percent of full scale if automatic range change circuitry is used and the limits for range changes are between 15 and 100 percent of full-scale chart deflection;

(2) The analyzer's response may be less than 15 percent of full scale if:

(i) Alternative (c)(2) of this section is used to ensure that the accuracy of the calibration curve is maintained below 15 percent; or

(ii) The full-scale value of the range is 155 ppm (or ppmC) or less.

[59 FR 31335, June 17, 1994. Redesignated and amended at 63 FR 56995, 57010, Oct. 23, 1998]

§ 89.311 Analyzer calibration frequency.

(a) Prior to initial use and after major repairs, bench check each analyzer (see § 89.315).

(b) Calibrations are performed as specified in §§ 89.319 through 89.324.

(c) At least monthly, or after any maintenance which could alter calibration, the following calibrations and checks are performed.

(1) Leak check the vacuum side of the system (see § 89.316).

(2) Check that the analysis system response time has been measured and accounted for.

(3) Verify that the automatic data collection system (if used) meets the requirements found in Table 3 in appendix A of this subpart.

(4) Check the fuel flow measurement instrument to insure that the specifications in Table 3 in appendix A of this subpart are met.

(d) Verify that all NDIR analyzers meet the water rejection ratio and the CO_2 rejection ratio as specified in § 89.318.

(e) Verify that the dynamometer test stand and power output instrumentation meet the specifications in Table 3 in appendix A of this subpart.

[59 FR 31335, June 17, 1994. Redesignated at 63 FR 56995, Oct. 23, 1998]

§ 89.312 Analytical gases.

(a) The shelf life of all calibration gases must not be exceeded. The expiration date of the calibration gases stated by the gas manufacturer shall be recorded.

(b) *Pure gases*. The required purity of the gases is defined by the contamination limits given below. The following gases must be available for operation:

(1) Purified nitrogen (Contamination ≤ 1 ppm C, ≤ 1 ppm CO, ≤ 400 ppm CO_2, ≤ 0.1 ppm NO)

(2) [Reserved]

(3) Hydrogen-helium mixture (40 ±2 percent hydrogen, balance helium) (Contamination ≤ 31 ppm C, ≤ 400 ppm CO)

(4) Purified synthetic air (Contamination ≤ 1 ppm C, ≤ 1 ppm CO, ≤ 400 ppm CO_2, ≤ 0.1 ppm NO) (Oxygen content between 18–21 percent vol.)

(c) *Calibration and span gases.* (1) Calibration gas values are to be derived from NIST Standard Reference Materials (SRM's) or other standardized gas samples and are to be single blends as listed in the following paragraph.

(2) Mixtures of gases having the following chemical compositions shall be available:

(i) C_3H_8 and purified synthetic air ;

(ii) C_3H_8 and purified nitrogen (optional for raw measurements);

(iii) CO and purified nitrogen;

(iv) NO_X and purified nitrogen (the amount of NO_2 contained in this calibration gas must not exceed 5 percent of the NO content);

(v) CO_2 and purified nitrogen.

(3) The true concentration of a span gas must be within ±2 percent of the NIST gas standard. The true concentration of a calibration gas must be within ±1 percent of the NIST gas standard. The use of precision blending devices (gas dividers) to obtain the required calibration gas concentrations is acceptable, provided that the blended gases are accurate to within ±1.5 percent of NIST gas standards, or other gas standards which have been approved by the Administrator. This accuracy implies that primary gases used (or blending) must be ''named'' to an accuracy of at least ±1 percent, traceable to NIST or other approved gas standards. All concentrations of calibration gas shall be given on a volume basis (volume percent or volume ppm).

(4) The gas concentrations used for calibration and span may also be obtained by means of a gas divider, either diluting with purified N_2 or diluting with purified synthetic air. The accuracy of the mixing device must be such that the concentration of the diluted gases may be determined to within ±2 percent.

(d) Oxygen interference check gases shall contain propane with 350 ppmC ±75 ppmC hydrocarbon. The three oxygen interference gases shall contain 21% ± 1% O_2, 10% ± 1% O_2, and 5% ± 1% O_2. The concentration value shall be determined to calibration gas tolerances by chromatographic analysis of total hydrocarbons plus impurities or by dynamic blending. Nitrogen shall be the predominant diluent with the balance oxygen.

(e) Fuel for the FID shall be a blend of 40 percent ±2 percent hydrogen with the balance being helium. The mixture shall contain less than 1 ppm equivalent carbon response; 98 to 100 percent hydrogen fuel may be used with advance approval of the Administrator.

(f) Hydrocarbon analyzer burner air. The concentration of oxygen for raw sampling must be within 1 mole percent of the oxygen concentration of the burner air used in the latest oxygen interference check ($\%O_2I$). If the difference in oxygen concentration is greater than 1 mole percent, then the oxygen interference must be checked and, if necessary, the analyzer adjusted to meet the $\%O_2I$ requirements. The burner air must contain less than 2 ppmC hydrocarbon.

(g) Gases for the methane analyzer shall be single blends of methane using air as the diluent.

[59 FR 31335, June 17, 1994. Redesignated and amended at 63 FR 56995, 57010, Oct. 23, 1998]

§ 89.313 Initial calibration of analyzers.

(a) *Warming-up time.* The warming-up time should be according to the recommendations of the manufacturer. If not specified, a minimum of two hours shall be allowed for warming up the analyzers.

(b) *NDIR and HFID analyzer.* The NDIR analyzer shall be tuned and maintained according to the instrument manufacturer's instructions. The combustion flame of the HFID analyzer shall be optimized in order to meet the specifications in § 89.319(b)(2).

(c) *Zero setting and calibration.* (1) Using purified synthetic air (or nitrogen), the CO, CO_2, NO_X. and HC analyzers shall be set at zero.

(2) Introduce the appropriate calibration gases to the analyzers and the values recorded. The same gas flow rates shall be used as when sampling exhaust.

(d) *Rechecking of zero setting*. The zero setting shall be rechecked and the procedure described in paragraph (c) of this section repeated, if necessary.

[59 FR 31335, June 17, 1994. Redesignated at 63 FR 56995, Oct. 23, 1998]

§ 89.314 Pre- and post-test calibration of analyzers.

Each operating range used during the test shall be checked prior to and after each test in accordance with the following procedure. (A chronic need for parameter adjustment can indicate a need for instrument maintenance.):

(a) The calibration is checked by using a zero gas and a span gas whose nominal value is between 75 percent and 100 percent of full-scale, inclusive, of the measuring range.

(b) After the end of the final mode, a zero gas and the same span gas will be used for rechecking. As an option, the zero and span may be rechecked at the end of each mode or each test segment. The analysis will be considered acceptable if the difference between the two measuring results is less than 2 percent of full scale.

[59 FR 31335, June 17, 1994. Redesignated and amended at 63 FR 56995, 57011, Oct. 23, 1998]

§ 89.315 Analyzer bench checks.

(a) Prior to initial use and after major repairs verify that each analyzer complies with the specifications given in Table 3 in appendix A of this subpart.

(b) If a stainless steel NO_2 to NO converter is used, condition all new or replacement converters. The conditioning consists of either purging the converter with air for a minimum of 4 hours or until the converter efficiency is greater than 90 percent. The converter must be at operational temperature while purging. Do not use this procedure prior to checking converter efficiency on in-use converters.

[59 FR 31335, June 17, 1994. Redesignated at 63 FR 56995, Oct. 23, 1998]

§ 89.316 Analyzer leakage and response time.

(a) *Vacuum side leak check*. (1) Any location within the analysis system where a vacuum leak could affect the test results must be checked.

(2) The maximum allowable leakage rate on the vacuum side is 0.5 percent of the in-use flow rate for the portion of the system being checked. The analyzer flows and bypass flows may be used to estimate the in-use flow rates.

(3) The sample probe and the connection between the sample probe and valve V2 (see Figure 1 in appendix B of this subpart) may be excluded from the leak check.

(b) [Reserved]

(c) The response time shall be accounted for in all emission measurement and calculations.

[59 FR 31335, June 17, 1994. Redesignated and amended at 63 FR 56995, 57011, Oct. 23, 1998]

§ 89.317 NO_X converter check.

(a) Prior to its introduction into service, and monthly thereafter, the chemiluminescent oxides of nitrogen analyzer shall be checked for NO_2 to NO converter efficiency. Figure 2 in appendix B of this subpart is a reference for the following paragraphs.

(b) Follow good engineering practices for instrument start-up and operation. Adjust the analyzer to optimize performance.

(c) Zero the oxides of nitrogen analyzer with zero-grade air or zero-grade nitrogen.

(d) Connect the outlet of the NO_X generator to the sample inlet of the oxides of nitrogen analyzer which has been set to the most common operating range.

(e) Introduce into the NO_X generator analyzer-system an NO-in-nitrogen (N_2) mixture with an NO concentration equal to approximately 80 percent of the most common operating range. The NO_2 content of the gas mixture shall be less than 5 percent of the NO concentration.

(f) With the oxides of nitrogen analyzer in the NO mode, record the concentration of NO indicated by the analyzer.

(g) Turn on the NO_X generator O_2 (or air) supply and adjust the O_2 (or air) flow rate so that the NO indicated by the analyzer is about 10 percent less than indicated in paragraph (f) of this section. Record the concentration of NO in this $NO+O_2$ mixture.

(h) Switch the NO_X generator to the generation mode and adjust the generation rate so that the NO measured on the analyzer is 20 percent of that measured in paragraph (f) of this section. There must be at least 10 percent unreacted NO at this point. Record the concentration of residual NO.

(i) Switch the oxides of nitrogen analyzer to the NO_X mode and measure total NO_X. Record this value.

(j) Switch off the NO_X generator but maintain gas flow through the system. The oxides of nitrogen analyzer will indicate the NO_X in the $NO+O_2$ mixture. Record this value.

(k) Turn off the NO_X generator O_2 (or air) supply. The analyzer will now indicate the NO_X in the original NO-in-N_2 mixture. This value should be no more than 5 percent above the value indicated in paragraph (f) of this section.

[59 FR 31335, June 17, 1994. Redesignated and amended at 63 FR 56995, 57011, Oct. 23, 1998]

§ 89.318 Analyzer interference checks.

(a) Gases present in the exhaust other than the one being analyzed can interfere with the reading in several ways. Positive interference occurs in NDIR and PMD instruments when the interfering gas gives the same effect as the gas being measured, but to a lesser degree. Negative interference occurs in NDIR instruments by the interfering gas broadening the absorption band of the measured gas and in CLD instruments by the interfering gas quenching the radiation. The interference checks described in this section are to be made initially and after any major repairs that could affect analyzer performance.

(b) *CO analyzer water and CO_2 interference checks.* Prior to its introduction into service and annually thereafter, the NDIR carbon monoxide analyzer shall be checked for response to water vapor and CO_2.

(1) Follow good engineering practices for instrument start-up and operation. Adjust the analyzer to optimize performance on the most sensitive range to be used.

(2) Zero the carbon monoxide analyzer with either zero-grade air or zero-grade nitrogen.

(3) Bubble a mixture of 3 percent CO_2 in N_2 through water at room temperature and record analyzer response.

(4) An analyzer response of more than 1 percent of full scale for ranges above 300 ppm full scale or more than 3 ppm on ranges below 300 ppm full scale requires corrective action. (Use of conditioning columns is one form of corrective action which may be taken.)

(c) *NO_X analyzer quench check.* The two gases of concern for CLD (and HCLD) analyzers are CO_2 and water vapor. Quench responses to these two gases are proportional to their concentrations and, therefore, require test techniques to determine quench at the highest expected concentrations experienced during testing.

(1) *NO_X analyzer CO_2 quench check.* A CO_2 span gas having a concentration of 80 percent to 100 percent of full scale of the maximum operating range used during testing shall be passed through the CO_2 NDIR analyzer and the value recorded as *a*. It is diluted approximately 50 percent with NO span gas and then passed through the CO_2 NDIR and CLD (or HCLD), with the CO_2 and NO values recorded as *b* and *c* respectively. The CO_2 shall then be shut off and only the NO span gas passed through the CLD (or HCLD) and the NO value recorded as *d*. Percent CO_2 quench shall be calculated as follows and shall not exceed 3 percent:

$$\%\,CO_2\ \text{quench} = 100 \times \left(1 - \frac{(c \times a)}{(d \times a) - (d \times b)}\right) \times (a / b)$$

Where:

a = Undiluted CO_2 concentration (percent)
b = Diluted CO2 concentration (percent)
c = Diluted NO concentration (ppm)
d = Undiluted NO concentration (ppm)

(2) *NO_X analyzer water quench check.* (i) This check applies to wet measurements only. An NO span gas having a

concentration of 80 to 100 percent of full scale of a normal operating range shall be passed through the CLD (or HCLD) and the response recorded as D. The NO span gas shall then be bubbled through water at room temperature and passed through the CLD (or HCLD) and the analyzer response recorded as AR. Determine and record the bubbler absolute operating pressure and the bubbler water temperature. (It is important that the NO span gas contains minimal NO_2 concentration for this check. No allowance for absorption of NO_2 in water has been made in the following quench calculations. This test may be optionally run in the NO mode to minimize the effect of any NO_2 in the NO span gas.)

(ii) Calculations for water quench must consider dilution of the NO span gas with water vapor and scaling of the water vapor concentration of the mixture to that expected during testing. Determine the mixture's saturated vapor pressure (designated as *Pwb*) that corresponds to the bubbler water temperature. Calculate the water concentration (Z1, percent) in the mixture by the following equation:

$$Z1 = 100 \times \frac{Pwb}{GP}$$

where

GP = analyzer operating pressure (Pa)

(iii) Calculate the expected dilute NO span gas and water vapor mixture concentration (designated as *D1*) by the following equation:

$$D1 = D \times \left(1 - \frac{Z1}{100}\right)$$

(iv)(A) The maximum raw or dilute exhaust water vapor concentration expected during testing (designated as Wm) can be estimated from the CO_2 span gas (or as defined in the equation in this paragraph and designated as A) criteria in paragraph (c)(1) of this section and the assumption of a fuel atom H/C ratio of 1.8:1 as:

$Wm(\%)=0.9\times A(\%)$

Where:

A = maximum CO2 concentration expected in the sample system during testing.

(B) Percent water quench shall not exceed 3 percent and shall be calculated by:

$$\%\text{Water Quench} = 100 \times \frac{D1 - AR}{D1} \times \frac{Wm}{Z1}$$

[59 FR 31335, June 17, 1994. Redesignated and amended at 63 FR 56995, 57011, Oct. 23, 1998; 63 FR 58101, Oct. 29, 1998]

§ 89.319 Hydrocarbon analyzer calibration.

(a) The FID hydrocarbon analyzer shall receive the initial and periodic calibration as described in this section. The HFID used with petroleum-fueled diesel (compression-ignition) engines shall be operated to a set point ±5.5 °C between 185 and 197 °C.

(b) *Initial and periodic optimization of detector response.* Prior to introduction into service and at least annually thereafter, adjust the FID hydrocarbon analyzer for optimum hydrocarbon response as specified in this paragraph. Alternate methods yielding equivalent results may be used, if approved in advance by the Administrator.

(1) Follow good engineering practices for initial instrument start-up and basic operating adjustment using the appropriate fuel (see § 89.312(e)) and zero-grade air.

(2) Optimize the FID's response on the most common operating range. The response is to be optimized with respect to fuel pressure or flow. Efforts shall be made to minimize response variations to different hydrocarbon species that are expected to be in the exhaust. Good engineering judgment is

to be used to trade off optimal FID response to propane-in-air against reductions in relative responses to other hydrocarbons. A good example of trading off response on propane for relative responses to other hydrocarbon species is given in Society of Automotive Engineers (SAE) Paper No. 770141, ''Optimization of Flame Ionization Detector for Determination of Hydrocarbon in Diluted Automotive Exhausts''; author Glenn D. Reschke. It is also required that the response be set to optimum condition with respect to air flow and sample flow. Heated Flame Ionization Detectors (HFIDs) must be at their specified operating temperature. One of the following procedures is required for FID or HFID optimization:

(i) The procedure outlined in Society of Automotive Engineers (SAE) paper No. 770141, ''Optimization of a Flame Ionization Detector for Determination of Hydrocarbon in Diluted Automotive Exhausts''; author, Glenn D. Reschke. This procedure has been incorporated by reference at § 89.6.

(ii) The HFID optimization procedures outlined in 40 CFR part 1065, subpart D.

(iii) Alternative procedures may be used if approved in advance by the Administrator.

(iv) The procedures specified by the manufacturer of the FID or HFID.

(3) After the optimum flow rates have been determined, record them for future reference.

(c) *Initial and periodic calibration.* Prior to introduction into service, after any maintenance which could alter calibration, and monthly thereafter, the FID or HFID hydrocarbon analyzer shall be calibrated on all normally used instrument ranges using the steps in this paragraph (c). Use the same flow rate and pressures as when analyzing samples. Calibration gases shall be introduced directly at the analyzer, unless the ''overflow'' calibration option of 40 CFR part 1065, subpart F, for the HFID is taken. New calibration curves need not be generated each month if the existing curve can be verified as continuing to meet the requirements of paragraph (c)(3) of this section.

(1) Adjust analyzer to optimize performance.

(2) Zero the hydrocarbon analyzer with zero-grade air.

(3) Calibrate on each used operating range with propane-in-air (dilute or raw) or propane-in-nitrogen (raw) calibration gases having nominal concentrations starting between 10–15 percent and increasing in at least six incremental steps to 90 percent (e.g., 15, 30, 45, 60, 75, and 90 percent of that range) of that range. The incremental steps are to be spaced to represent good engineering practice. For each range calibrated, if the deviation from a least-squares best-fit straight line is 2 percent or less of the value at each data point, concentration values may be calculated by use of a single calibration factor for that range. If the deviation exceeds 2 percent at each non-zero data point and within ±0.3 percent of full scale on the zero, the best-fit non-linear equation which represents the data to within these limits shall be used to determine concentration.

(d) *Oxygen interference optimization (required for raw).* Choose a range where the oxygen interference check gases will fall in the upper 50 percent. Conduct the test, as outlined in this paragraph, with the oven temperature set as required by the instrument manufacturer. Oxygen interference check gas specifications are found in § 89.312(d).

(1) Zero the analyzer.

(2) Span the analyzer with the 21% oxygen interference gas specified in § 89.312(d).

(3) Recheck zero response. If it has changed more than 0.5 percent of full scale repeat paragraphs (d)(1) and (d)(2) of this section to correct problem.

(4) Introduce the 5 percent and 10 percent oxygen interference check gases.

(5) Recheck the zero response. If it has changed more ±1 percent of full scale, repeat the test.

(6) Calculate the percent of oxygen interference (designated as percent O_2I) for each mixture in paragraph (d)(4) of this section.

$$\text{percent } O_2I = ((B - C) \times 100)/B$$

Where:

A = hydrocarbon concentration (ppmC) of the span gas used in paragraph (d)(2) of this section.

B = hydrocarbon concentration (ppmC) of the oxygen interference check gases used in paragraph (d)(4) of this section.
C = analyzer response (ppmC) = A/D; where
D = (percent of full-scale analyzer response due to A) × (percent of full-scale analyzer response due to B)

[59 FR 31335, June 17, 1994. Redesignated and amended at 63 FR 56995, 57011, Oct. 23, 1998; 70 FR 40445, July 13, 2005]

§ 89.320 Carbon monoxide analyzer calibration.

(a) Calibrate the NDIR carbon monoxide as described in this section.

(b) *Initial and periodic interference check.* Prior to its introduction into service and annually thereafter, the NDIR carbon monoxide analyzer shall be checked for response to water vapor and CO_2 in accordance with § 318.96(b).

(c) *Initial and periodic calibration.* Prior to its introduction into service, after any maintenance which could alter calibration, and every two months thereafter, the NDIR carbon monoxide analyzer shall be calibrated. New calibration curves need not be generated every two months if the existing curve can be verified as continuing to meet the requirements of paragraph (c)(3) of this section.

(1) Adjust the analyzer to optimize performance.

(2) Zero the carbon monoxide analyzer with either zero-grade air or zero-grade nitrogen.

(3) Calibrate on each used operating range with carbon monoxide-in-N_2 calibration gases having nominal concentrations starting between 10 and 15 percent and increasing in at least six incremental steps to 90 percent (e.g., 15, 30, 45, 60, 75, and 90 percent) of that range. The incremental steps are to be spaced to represent good engineering practice. For each range calibrated, if the deviation from a least-squares best-fit straight line is 2 percent or less of the value at each non-zero data point and within ±0.3 percent of full scale on the zero, concentration values may be calculated by use of a single calibration factor for that range. If the deviation exceeds these limits, the best-fit non-linear equation which represents the data to within these limits shall be used to determine concentration.

(d) The initial and periodic interference, system check, and calibration test procedures specified in 40 CFR part 1065 may be used in lieu of the procedures specified in this section.

[59 FR 31335, June 17, 1994. Redesignated and amended at 63 FR 56995, 57012, Oct. 23, 1998; 70 FR 40445, July 13, 2005]

§ 89.321 Oxides of nitrogen analyzer calibration.

(a) The chemiluminescent oxides of nitrogen analyzer shall receive the initial and periodic calibration described in this section.

(b) Prior to its introduction into service, and monthly thereafter, the chemiluminescent oxides of nitrogen analyzer is checked for NO_2 to NO converter efficiency according to § 89.317.

(c) *Initial and periodic calibration.* Prior to its introduction into service, after any maintenance which could alter calibration, and monthly thereafter, the chemiluminescent oxides of nitrogen analyzer shall be calibrated on all normally used instrument ranges. New calibration curves need not be generated each month if the existing curve can be verified as continuing to meet the requirements of paragraph (c)(3) of this section. Use the same flow rate as when analyzing samples. Proceed as follows:

(1) Adjust analyzer to optimize performance.

(2) Zero the oxides of nitrogen analyzer with zero-grade air or zero-grade nitrogen.

(3) Calibrate on each normally used operating range with NO-in-N_2 calibration gases with nominal concentrations starting at between 10 and 15 percent and increasing in at least six incremental steps to 90 percent (e.g., 15, 30, 45, 60, 75, and 90 percent) of that range. The incremental steps are to be spaced to represent good engineering practice. For each range calibrated, if the deviation from a least-squares best-fit straight line is 2 percent or less of the value at each non-zero data point and within ±0.3 percent of full scale on the zero, concentration values may be calculated by use of a single calibration factor for that range. If the deviation exceeds these limits, the best-fit non-linear equation which represents the data to within these limits shall be used to determine concentration.

(d) The initial and periodic interference, system check, and calibration test procedures specified in 40 CFR part 1065 may be used in lieu of the procedures specified in this section.

[59 FR 31335, June 17, 1994. Redesignated and amended at 63 FR 56995, 57012, Oct. 23, 1998; 70 FR 40445, July 13, 2005]

§ 89.322 Carbon dioxide analyzer calibration.

(a) Prior to its introduction into service, after any maintenance which could alter calibration, and bi-monthly thereafter, the NDIR carbon dioxide analyzer shall be calibrated on all normally used instrument ranges. New calibration curves need not be generated each month if the existing curve can be verified as continuing to meet the requirements of paragraph (a)(3) of this section. Proceed as follows:

(1) Follow good engineering practices for instrument start-up and operation. Adjust the analyzer to optimize performance.

(2) Zero the carbon dioxide analyzer with either zero-grade air or zero-grade nitrogen.

(3) Calibrate on each normally used operating range with carbon dioxide-in-N_2 calibration or span gases having nominal concentrations starting between 10 and 15 percent and increasing in at least six incremental steps to 90 percent (e.g., 15, 30, 45, 60, 75, and 90 percent) of that range. The incremental steps are to be spaced to represent good engineering practice. For each range calibrated, if the deviation from a least-squares best-fit straight line is 2 percent or less of the value at each non-zero data point and within ±0.3 percent of full scale on the zero, concentration values may be calculated by use of a single calibration factor for that range. If the deviation exceeds these limits, the best-fit nonlinear equation which represents the data to within these limits shall be used to determine concentration.

(b) The initial and periodic interference, system check, and calibration test procedures specified in 40 CFR part 1065 may be used in lieu of the procedures in this section.

[59 FR 31335, June 17, 1994. Redesignated and amended at 63 FR 56995, 57012, Oct. 23, 1998; 70 FR 40445, July 13, 2005]

§ 89.323 NDIR analyzer calibration.

(a) *Detector optimization*. If necessary, follow the instrument manufacturer's instructions for initial start-up and basic operating adjustments.

(b) *Calibration curve*. Develop a calibration curve for each range used as follows:

(1) Zero the analyzer.

(2) Span the analyzer to give a response of approximately 90 percent of full-scale chart deflection.

(3) Recheck the zero response. If it has changed more than 0.5 percent of full scale, repeat the steps given in paragraphs (b)(1) and (b)(2) of this section.

(4) Record the response of calibration gases having nominal concentrations starting between 10 and 15 percent and increasing in at least six incremental steps to 90 percent of that range. The incremental steps are to be spaced to represent good engineering practice.

(5) Generate a calibration curve. The calibration curve shall be of fourth order or less, have five or fewer coefficients. If any range is within 2 percent of being linear a linear calibration may be used. Include zero as a data point. Compensation for known impurities in the zero gas can be made to the zero-data point. The calibration curve must fit the data points within 2 percent of point.

(6) Optional. A new calibration curve need not be generated if:

(i) A calibration curve conforming to paragraph (b)(5) of this section exists; or

(ii) The responses generated in paragraph (b)(4) of this section are within 1 percent of full scale or 2 percent of point, whichever is less, of the responses predicted by the calibration curve for the gases used in paragraph (b)(4) of this section.

(7) If multiple range analyzers are used, the lowest range used must meet the curve fit requirements below 15 percent of full scale.

[59 FR 31335, June 17, 1994. Redesignated at 63 FR 56995, Oct. 23, 1998]

§ 89.324 Calibration of other equipment.

(a) Other test equipment used for testing shall be calibrated as often as

required by the instrument manufacturer or necessary according to good practice.

(b) If a methane analyzer is used, the methane analyzer shall be calibrated prior to introduction into service and monthly thereafter:

(1) Follow the manufacturer's instructions for instrument startup and operation. Adjust the analyzer to optimize performance.

(2) Zero the methane analyzer with zero-grade air.

(3) Calibrate on each normally used operating range with CH_4 in air with nominal concentrations starting between 10 and 15 percent and increasing in at least six incremental steps to 90 percent (e.g., 15, 30, 45, 60, 75, and 90 percent) of that range. The incremental steps are to be spaced to represent good engineering practice. For each range calibrated, if the deviation from a least-squares best-fit straight line is 2 percent or less of the value at each non-zero data point and within ±0.3 percent of full scale on the zero, concentration values may be calculated by use of a single calibration factor for that range. If the deviation exceeds these limits, the best-fit nonlinear equation which represents the data to within these limits shall be used to determine concentration.

[63 FR 57013, Oct. 23, 1998]

§ 89.325 Engine intake air temperature measurement.

(a) Engine intake air temperature measurement must be made within 122 cm of the engine. The measurement location must be made either in the supply system or in the air stream entering the supply system.

(b) The temperature measurements shall be accurate to within ±2 °C.

[59 FR 31335, June 17, 1994. Redesignated at 63 FR 56995, Oct. 23, 1998]

§ 89.326 Engine intake air humidity measurement.

(a) *Humidity conditioned air supply.* Air that has had its absolute humidity altered is considered humidity- conditioned air. For this type of intake air supply, the humidity measurements must be made within the intake air supply system and after the humidity conditioning has taken place.

(b) *Nonconditioned air supply procedure.* Humidity measurements in nonconditioned intake air supply systems must be made in the intake air stream entering the supply system. Alternatively, the humidity measurements can be measured within the intake air supply stream.

[59 FR 31335, June 17, 1994. Redesignated at 63 FR 56995, Oct. 23, 1998]

§ 89.327 Charge cooling.

For engines with an air-to-air intercooler (or any other low temperature charge air cooling device) between the turbocharger compressor and the intake manifold, follow SAE J1937. This procedure has been incorporated by reference. See § 89.6. The temperature of the cooling medium and the temperature of the charge air shall be monitored and recorded.

[59 FR 31335, June 17, 1994. Redesignated at 63 FR 56995, Oct. 23, 1998]

§ 89.328 Inlet and exhaust restrictions.

(a) The manufacturer is liable for emission compliance over the full range of restrictions that are specified by the manufacturer for that particular engine.

(b) Perform testing at the following inlet and exhaust restriction settings.

(1) Equip the test engine with an air inlet system presenting an air inlet restriction within 5 percent of the upper limit at maximum air flow, as specified by the engine manufacturer for a clean air cleaner. A system representative of the installed engine may be used. In other cases a test shop system may be used.

(2) The exhaust backpressure must be within 5 percent of the upper limit at maximum declared power, as specified by the engine manufacturer. A system representative of the installed engine may be used. In other cases a test shop system may be used.

[59 FR 31335, June 17, 1994. Redesignated and amended at 63 FR 56995, 57013, Oct. 23, 1998]

§ 89.329 Engine cooling system.

An engine cooling system is required with sufficient capacity to maintain

the engine at normal operating temperatures as prescribed by the engine manufacturer.

[59 FR 31335, June 17, 1994. Redesignated at 63 FR 56995, Oct. 23, 1998]

§ 89.330 Lubricating oil and test fuels.

(a) *Lubricating oil.* Use the engine lubricating oil for testing that meets the requirements as specified by the manufacturer for a particular engine and intended usage. Record the specifications of the lubricating oil used for the test.

(b) *Test fuels.* (1) Use diesel fuels for testing which are clean and bright, with pour and cloud points adequate for operability. The diesel fuel may contain nonmetallic additives as follows: Cetane improver, metal deactivator, antioxidant, dehazer, antirust, pour depressant, dye, dispersant, and biocide.

(2) Use petroleum fuel meeting the specifications in Table 4 in Appendix A of this subpart, or substantially equivalent specifications approved by the Administrator, for exhaust emission testing. The grade of diesel fuel used must be commercially designated as ''Type 2–D'' grade diesel fuel and recommended by the engine manufacturer.

(3) Testing of Tier 1 and Tier 2 engines rated under 37 kW and Tier 2 and Tier 3 engines rated at or above 37 kW that is conducted by the Administrator shall be performed using test fuels that meet the specifications in Table 4 in Appendix A of this subpart and that have a sulfur content no higher than 0.20 weight percent.

(c) Other fuels may be used for testing provided they meet the following qualifications:

(1) They are commercially available;

(2) Information acceptable to the Administrator is provided to show that only the designated fuel would be used in customer service;

(3) Use of a fuel listed under paragraph (b) of this section would have a detrimental effect on emissions or durability; and

(4) Fuel specifications are approved in writing by the Administrator prior to the start of testing.

(d) Report the specification range of the fuel to be used under paragraphs (b)(2) and (c)(1) through (c)(4) of this section in the application for certification in accordance with § 89.115 (a)(8).

(e) *Low-sulfur test fuel.* (1) Upon request, for engines rated at or above 75 kW in model years 2006 or 2007, the diesel test fuel may be the low-sulfur diesel test fuel specified in 40 CFR part 1065, subject to the provisions of this paragraph (e)(1).

(i) To use this option, the manufacturer must—

(A) Ensure that ultimate purchasers of equipment using these engines are informed that the use of fuel meeting the 500 ppm specification is recommended.

(B) Recommend to equipment manufacturers that a label be applied at the fuel inlet recommending 500 ppm fuel.

(ii) None of the engines in the engine family may employ sulfur-sensitive technologies.

(iii) For engines rated at or above 130 kW, this option may be used in 2006 and 2007. For engines rated at or above 75 kW and under 130 kW, this option may be used only in 2007.

(2) For model years 2008 through 2010, except as otherwise provided, the diesel test fuel shall be the low-sulfur diesel test fuel specified in 40 CFR part 1065.

(3) The diesel test fuel shall be the ultra low-sulfur diesel test fuel specified in 40 CFR part 1065 for model years 2011 and later.

(4) For model years 2007 through 2010 engines that use sulfur-sensitive emission-control technology, the diesel test fuel is the ultra low-sulfur fuel specified in 40 CFR part 1065 if the manufacturer demonstrates that the in-use engines will use only fuel with 15 ppm or less of sulfur.

(5) Instead of the test fuels described in paragraphs (e)(2) through (4) of this section, for model years 2008 and later, manufacturers may use the test fuel described in appendix A of this subpart. In such cases, the test fuel described in appendix A of this subpart shall be the test fuel for all manufacturer and EPA testing.

[59 FR 31335, June 17, 1994. Redesignated and amended at 63 FR 56995, 57013, Oct. 23, 1998; 69 FR 39213, June 29, 2004]

§ 89.331 Test conditions.

(a) *General requirements.* Calculate all volumes and volumetric flow rates at

standard conditions for temperature and pressure (0 °C and 101.3 kPa), and these conditions must be used consistently throughout all calculations.

(b) *Engine test conditions*. Measure the absolute temperature (designated as *T* and expressed in Kelvin) of the engine air at the inlet to the engine, and the dry atmospheric pressure (designated as *p* and expressed in kPa), and determine the parameter *f* according to the following provisions:

(1) Naturally aspirated and mechanically supercharged engines:

$$f = \frac{99}{p_s} \times \left(\frac{T}{298}\right)^{0.7}$$

(2) Turbocharged engine with or without cooling of inlet air:

$$f = \left(\frac{99}{p_s}\right)^{0.7} \times \left(\frac{T}{298}\right)^{1.5}$$

(c) For a test to be recognized as valid, the parameter *f* shall be between the limits as shown below:

$$0.98 < f < 1.02$$

[59 FR 31335, June 17, 1994. Redesignated at 63 FR 56995, Oct. 23, 1998]

APPENDIX A TO SUBPART D OF PART 89—TABLES

TABLE 1—ABBREVIATIONS USED IN SUBPART D

CLD	Chemiluminescent detector.
CO	Carbon monoxide.
CO_2	Carbon dioxide.
HC	Hydrocarbons.
HCLD	Heated chemiluminescent detector.
HFID	Heated flame ionization detector.
GC	Gas chromatograph.
NDIR	Non-dispersive infra-red analyzer.
NIST	National Institute for Standards and Testing.
NO	Nitric Oxide.
NO_2	Nitrogen Dioxide.
NO_X	Oxides of nitrogen.
O_2	Oxygen.

TABLE 2—SYMBOLS USED IN SUBPARTS D AND E

Symbol	Term	Unit
conc	Concentration (ppm by volume)	ppm
f	Engine specific parameter considering atmospheric conditions	
F_{FCB}	Fuel specific factor for the carbon balance calculation	
F_{FD}	Fuel specific factor for exhaust flow calculation on dry basis	
F_{FH}	Fuel specific factor representing the hydrogen to carbon ratio	
F_{FW}	Fuel specific factor for exhaust flow calculation on wet basis	
FR	Rate of fuel consumed	g/h
G_{AIRW}	Intake air mass flow rate on wet basis	kg/h
G_{AIRD}	Intake air mass flow rate on dry basis	kg/h
G_{EXHW}	Exhaust gas mass flow rate on wet basis	kg/h
G_{Fuel}	Fuel mass flow rate	kg/h
H	Absolute humidity (water content related to dry air)	g/kg
i	Subscript denoting an individual mode	
K_H	Humidity correction factor	
L	Percent torque related to maximum torque for the test mode	%
mass	Pollutant mass flow	g/h
$n_{d,i}$	Engine speed (average at the i'th mode during the cycle)	1/min
P_s	Dry atmospheric pressure	kPa
P_d	Test ambient saturation vapor pressure at ambient temperature	kPa
P	Observed brake power output uncorrected	kW
P_{AUX}	Declared total power absorbed by auxiliaries fitted for the test	kW
P_M	Maximum power measured at the test speed under test conditions	kW
P_i	$P_i = P_{M,i} + P_{AUX,i}$	
P_B	Total barometric pressure (average of the pre-test and post-test values)	kPa
P_v	Saturation pressure at dew point temperature	kPa
R_a	Relative humidity of the ambient air	%
S	Dynamometer setting	kW
T	Absolute temperature at air inlet	K
T_{be}	Air temperature after the charge air cooler (if applicable) (average)	K
$T_{cl out}$	Coolant temperature outlet (average)	K
T_{Dd}	Absolute dewpoint temperature	K
$T_{d,i}$	Torque (average at the i'th mode during the cycle)	N-m
T_{SC}	Temperature of the intercooled air	K
$T_{ref.}$	Reference temperature	K
V_{EXHD}	Exhaust gas volume flow rate on dry basis	m^3/h
V_{AIRW}	Intake air volume flow rate on wet basis	m^3/h
P_B	Total barometric pressure	kPa
V_{EXHW}	Exhaust gas volume flow rate on wet basis	m^3/h

TABLE 2—SYMBOLS USED IN SUBPARTS D AND E—Continued

Symbol	Term	Unit
WF	Weighing factor	
WF_E	Effective weighing factor	

TABLE 3—MEASUREMENT ACCURACY AND CALIBRATION FREQUENCY

No.	Item	Calibration accuracy [1]	Calibration frequency
1	Engine speed	±2%	30 days.
2	Torque	Larger of ±2% of point or ±1% of engine maximum.	30 days.
3	Fuel consumption (raw measurement)	±2% of engine maximum	30 days.
4	Air consumption (raw measurement)	±2% of engine maximum	As required.
5	Coolant temperature	±2 °K	As required.
6	Lubricant temperature	±2 °K	As required.
7	Exhaust backpressure	±1.0% of engine maximum	As required.
8	Inlet depression	1.0% of engine maximum	As required.
9	Exhaust gas temperature	±15 °K	As required.
10	Air inlet temperature (combustion air)	±2 °K	As required.
11	Atmospheric pressure	±0.5%	As required.
12	Humidity (combustion air) (g of H_2O/Kg of dry air)	±0.5	As required.
13	Fuel temperature	±2 °K	As required.
14	Temperature with regard to dilution tunnel	±2 °K	As required.
15	Dilution air humidity (g of H_2O/Kg of dry air)	±0.5	As required.
16	HC analyzer	±2%	Monthly or as required.
17	CO analyzer	±2%	Once per 60 days or as required.
18	NO_X analyzer	±2%	Monthly or as required.
19	Methane analyzer	±2%	Monthly or as required.
20	NO_X converter efficiency check	90%	Monthly.
21	CO_2 analyzer	±2%	Once per 60 days or as required.

[1] All accuracy requirements pertain to the final recorded value which is inclusive of the data acquisition system.

TABLE 4—FEDERAL TEST FUEL SPECIFICATIONS

Item	Procedure (ASTM) [1]	Value (type 2–D)
Cetane	D613–95	40–48
Distillation Range:		
IBP, °C	D86–97	171–204
10% point, °C	86–97	204–238
50% point, °C	86–97	243–282
90% point, °C	86–97	293–332
EP, °C	86–97	321–366
Gravity, API	D287–92	32–37
Total Sulfur, %mass	D129–95 or D2622–98	0.03–0.40
Hydrocarbon composition:		
Aromatics, %vol	D1319–98 or D5186–96	[2] 10
Paraffins, Naphthenes, Olefins	D1319–98	([3])
Flash Point, °C (minimum)	D93–09	54
Viscosity @ 38 °C, centistokes	D445–09	2.0–3.2

[1] All ASTM procedures in this table have been incorporated by reference. See § 89.6.
[2] Minimum.
[3] Remainder.

[63 FR 57013, Oct. 23, 1998, as amended at 77 FR 2461, Jan. 18, 2012]

APPENDIX B TO SUBPART D OF PART 89—FIGURES

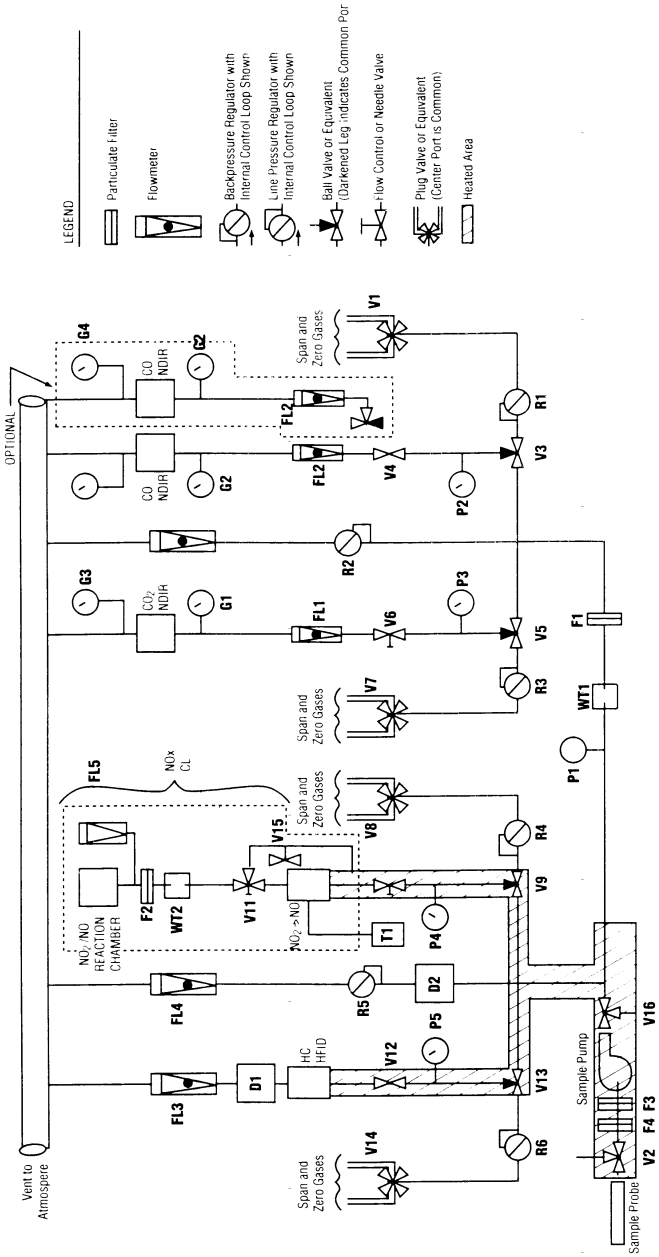

Figure 1. — Exhaust Gas Sampling and Analytical Train

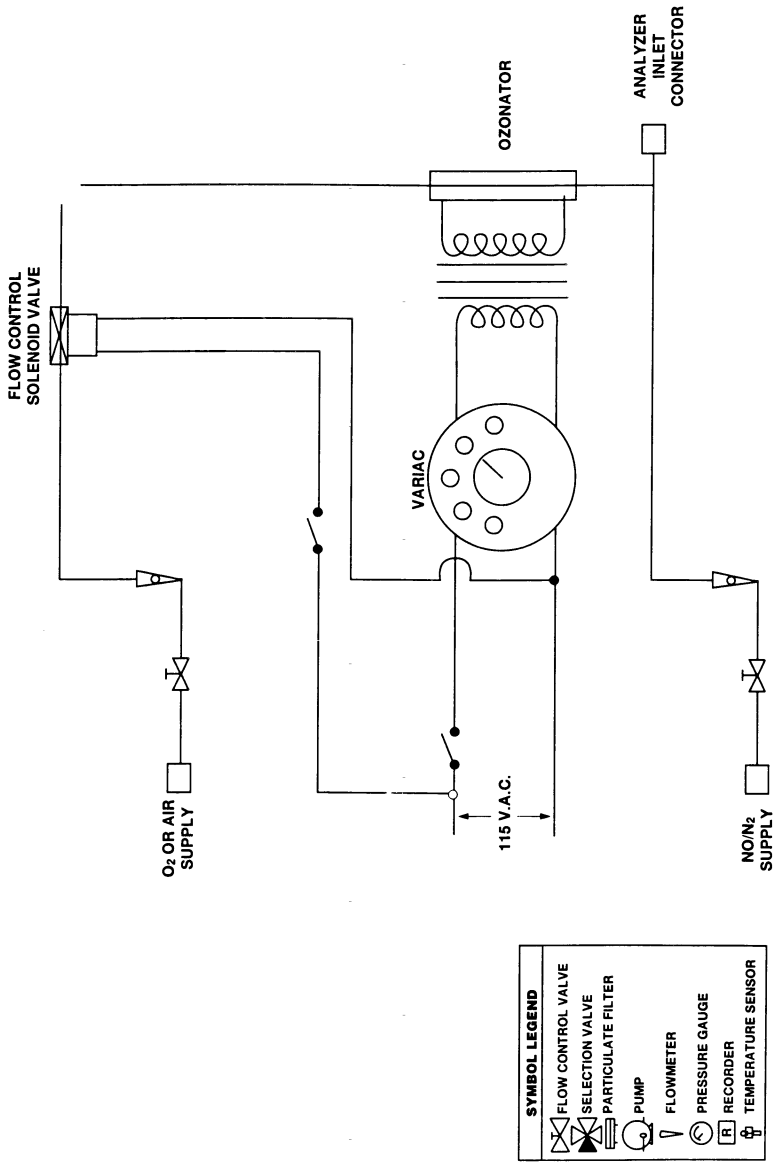

Figure 2. — NOx Converter Efficiency Detector

Subpart E—Exhaust Emission Test Procedures

§ 89.401 Scope; applicability.

(a) This subpart describes the procedures to follow in order to perform exhaust emission tests on new nonroad compression-ignition engines subject to the provisions of subpart B of this part.

(b) Exhaust gases, either raw or dilute, are sampled while the test engine is operated using the appropriate test cycle on an engine dynamometer. The

exhaust gases receive specific component analysis determining concentration of pollutant, exhaust volume, the fuel flow (raw analysis), and the power output during each mode. Emissions are reported as grams per kilowatt hour (g/kW-hr).

(c) Requirements for emission test equipment and calibrating this equipment are found in subpart D of this part.

[59 FR 31335, June 17, 1994. Redesignated and amended at 63 FR 56995, 57015, Oct. 23, 1998]

§ 89.402 Definitions.

The definitions in subpart A of this part apply to this subpart. For terms not defined in this part, the definitions in 40 CFR part 86, subparts A, D, I, and N, apply to this subpart.

[63 FR 57015, Oct. 23, 1998]

§ 89.403 Symbols/abbreviations.

(a) The abbreviations in § 86.094–3 or § 89.3 of this chapter apply to this subpart.

(b) The abbreviations in Table 1 in appendix A to subpart D also apply to this subpart. Some abbreviations from § 89.3 have been included for the convenience of the reader.

(c) The symbols in Table 2 in appendix A to subpart D apply to this subpart.

[59 FR 31335, June 17, 1994. Redesignated at 63 FR 56996, Oct. 23, 1998]

§ 89.404 Test procedure overview.

(a) The test consists of prescribed sequences of engine operating conditions to be conducted on an engine dynamometer. The exhaust gases, generated raw or dilute during engine operation, are sampled for specific component analysis through the analytical train. The test is applicable to engines equipped with catalytic or direct-flame afterburners, induction system modifications, or other systems, or to uncontrolled engines.

(b) The test is designed to determine the brake-specific emissions of hydrocarbons, carbon monoxide, oxides of nitrogen, and particulate matter. For more information on particulate matter sampling see § 89.112(c). The test cycles consist of various steady-state operating modes that include different combinations of engine speeds and loads. These procedures require the determination of the concentration of each pollutant, exhaust volume, the fuel flow (raw analysis), and the power output during each mode. The measured values are weighted and used to calculate the grams of each pollutant emitted per kilowatt hour (g/kW-hr).

(c)(1) When an engine is tested for exhaust emissions, the complete engine shall be tested with all emission control devices installed and functioning.

(2) On air-cooled engines, the fan shall be installed.

(3) Additional accessories (for example, oil cooler, alternators, or air compressors) may be installed but such accessory loading will be considered parasitic in nature and observed power shall be used in the emission calculation.

(d) All emission control systems installed on or incorporated in the application must be functioning during all procedures in this subpart. In cases of component malfunction or failure, maintenance to correct component failure or malfunction must be authorized in accordance with § 86.094–25 of this chapter.

[59 FR 31335, June 17, 1994. Redesignated and amended at 63 FR 56995, 57015, Oct. 23, 1998]

§ 89.405 Recorded information.

(a) The information described in this section must be recorded, where applicable, for each test.

(b) *Engine description and specification.* A copy of the information specified in this paragraph must accompany each engine sent to the Administrator for compliance testing. The manufacturer need not record the information specified in this paragraph for each test if the information, with the exception of paragraphs (b)(3) and (b)(9) of this section, is included in the manufacturer's application for certification.

(1) Engine-system combination.

(2) Engine identification numbers.

(3) Number of hours of operation accumulated on engine.

(4) Rated maximum horsepower and torque.

(5) Maximum horsepower and torque speeds.

(6) Engine displacement.

(7) Governed speed.

(8) Idle rpm.

(9) Fuel consumption at maximum power and torque.

(10) Maximum air flow.

(11) Air inlet restriction.

(12) Exhaust pipe diameter(s).

(13) Maximum exhaust system backpressure.

(c) *Test data; general.* (1) Engine-system combination.

(2) Engine identification number.

(3) Instrument operator.

(4) Engine operator.

(5) Number of hours of operation accumulated on the engine prior to beginning the warm-up portion of the test.

(6) Fuel identification.

(7) Date of most recent analytical assembly calibration.

(8) All pertinent instrument information such as tuning, gain, serial numbers, detector number, and calibration curve numbers. As long as this information is available for inspection by the Administrator, it may be summarized by system number or analyzer identification numbers.

(d) *Test data; pre-test.* (1) Date and time of day.

(2) Test number.

(3) Intermediate speed and rated speed as defined in § 89.2 and maximum observed torque for these speeds.

(4) Recorder chart or equivalent. Identify the zero traces for each range used, and span traces for each range used.

(5) Air temperature after and pressure drop across the charge air cooler (if applicable) at maximum observed torque and rated speed.

(e) *Test data; modal.* (1) Recorder chart or equivalent. Identify for each test mode the emission concentration traces and the associated analyzer range(s). Identify the start and finish of each test.

(2) Observed engine torque.

(3) Observed engine rpm.

(4) Record engine torque and engine rpm continuously during each mode with a chart recorder or equivalent recording device.

(5) Intake air flow (for raw mass flow sampling method only) and depression for each mode.

(6) Engine intake air temperature at the engine intake or turbocharger inlet for each mode.

(7) Mass fuel flow (for raw sampling) for each mode.

(8) Engine intake humidity.

(9) Coolant temperature outlet.

(10) Engine fuel inlet temperature at the pump inlet.

(f) *Test data; post-test.* (1) Recorder chart or equivalent. Identify the zero traces for each range used and the span traces for each range used. Identify hangup check, if performed.

(2) Total number of hours of operation accumulated on the engine.

[59 FR 31335, June 17, 1994. Redesignated and amended at 63 FR 56995, 57015, Oct. 23, 1998]

§ 89.406 Pre-test procedures.

(a) Allow a minimum of 30 minutes warmup in the standby or operating mode prior to spanning the analyzers.

(b) Replace or clean the filter elements and then vacuum leak check the system per § 89.316(a). Allow the heated sample line, filters, and pumps to reach operating temperature.

(c) Perform the following system checks:

(1) Check the sample-line temperatures (see § 89.309(a)(4)(ii) and (a)(5)(i)(A)).

(2) Check that the system response time has been accounted for prior to sample collection data recording.

(3) A hang-up check is permitted, but is optional.

(d) Check analyzer zero and span at a minimum before and after each test. Further, check analyzer zero and span any time a range change is made or at the maximum demonstrated time span for stability for each analyzer used.

(e) Check system flow rates and pressures.

[59 FR 31335, June 17, 1994. Redesignated and amended at 63 FR 56995, 57015, Oct. 23, 1998]

§ 89.407 Engine dynamometer test run.

(a) Measure and record the temperature of the air supplied to the engine, the fuel temperature, the intake air humidity, and the observed barometric pressure during the sampling for each mode. The fuel temperature shall be less than or equal to 43C during the sampling for each mode.

(b) The governor and fuel system shall have been adjusted to provide engine performance at the levels reported in the application for certification required under § 89.115.

(c) The following steps are taken for each test:

(1) Install instrumentation and sample probes as required.

(2) Perform the pre-test procedure as specified in § 89.406.

(3) Read and record the general test data as specified in § 89.405(c).

(4) Start cooling system.

(5) Precondition (warm up) the engine in the following manner:

(i) For variable-speed engines:

(A) Operate the engine at idle for 2 to 3 minutes;

(B) Operate the engine at approximately 50 percent power at the peak torque speed for 5 to 7 minutes;

(C) Operate the engine at rated speed and maximum horsepower for 25 to 30 minutes;

(ii) For constant-speed engines:

(A) Operate the engine at minimum load for 2 to 3 minutes;

(B) Operate the engine at 50 percent load for 5 to 7 minutes;

(C) Operate the engine at maximum load for 25 to 30 minutes;

(iii) Optional. It is permitted to precondition the engine at rated speed and maximum horsepower until the oil and water temperatures are stabilized. The temperatures are defined as stabilized if they are maintained within 2 percent of point on an absolute basis for 2 minutes. The engine must be operated a minimum of 10 minutes for this option. This optional procedure may be substituted for the procedure in paragraph (c)(5)(i)or (c)(5)(ii) of this section;

(iv) Optional. If the engine has been operating on service accumulation for a minimum of 40 minutes, the service accumulation may be substituted for the procedure in paragraphs (c)(5)(i) through (iii) of this section.

(6) Read and record all pre-test data specified in § 89.405(d).

(7) Start the test cycle (see § 89.410) within 20 minutes of the end of the warmup. (See paragraph (c)(13) of this section.) A mode begins when the speed and load requirements are stabilized to within the requirements of § 89.410(b). A mode ends when valid emission sampling for that mode ends. For a mode to be valid, the speed and load requirements must be maintained continuously during the mode. Sampling in the mode may be repeated until a valid sample is obtained as long the speed and torque requirements are met.

(8) Calculate the torque for any mode with operation at rated speed.

(9) During the first mode with intermediate speed operation, if applicable, calculate the torque corresponding to 75 and 50 percent of the maximum observed torque for the intermediate speed.

(10) Record all modal data specified in § 89.405(e) during a minimum of the last 60 seconds of each mode.

(11) Record the analyzer(s) response to the exhaust gas during the a minimum of the last 60 seconds of each mode.

(12) Test modes may be repeated, as long as the engine is preconditioned by running the previous mode. In the case of the first mode of any cycle, precondition according to paragraph (c)(5) of this section.

(13) If a delay of more than 20 minutes, but less than 4 hours, occurs between the end of one mode and the beginning of another mode, precondition the engine by running the previous mode. If the delay exceeds 4 hours, the test shall include preconditioning (begin at paragraph (c)(2) of this section).

(14) The speed and load points for each mode are listed in Tables 1 through 4 of Appendix B of this subpart. The engine speed and load shall be maintained as specified in § 89.410(b).

(15) If at any time during a test mode, the test equipment malfunctions or the specifications in paragraph (c)(14) of this section are not met, the test mode is void and may be aborted. The test mode may be restarted by preconditioning with the previous mode.

(16) Fuel flow and air flow during the idle load condition may be determined just prior to or immediately following the dynamometer sequence, if longer times are required for accurate measurements.

(d) *Exhaust gas measurements.* (1) Measure HC, CO, CO_2, and NO_X concentrations in the exhaust sample. Use the same units and modal calculations

as for your other results to report a single weighted value for CO_2; round CO_2 to the nearest 1 g/kW-hr.

(2) Each analyzer range that may be used during a test mode must have the zero and span responses recorded prior to the execution of the test. Only the zero and span for the range(s) used to measure the emissions during the test are required to be recorded after the completion of the test.

(3) It is permissible to change filter elements between test modes.

(4) A leak check is permitted between test segments.

(5) A hangup check is permitted between test segments.

(6) If, during the emission measurement portion of a test segment, the value of the gauges downstream of the NDIR analyzer(s) *G3* or *G4* (see Figure 1 in appendix B to subpart D) differs by more than ±0.5 kPa from the pretest value, the test segment is void.

[59 FR 31335, June 17, 1994. Redesignated and amended at 63 FR 56996, 57015, Oct. 23, 1998; 74 FR 56374, Oct. 30, 2009]

§ 89.408 Post-test procedures.

(a) A hangup check is recommended at the completion of the last test mode using the following procedure:

(1) Within 30 seconds introduce a zero-grade gas or room air into the sample probe or valve *V2* (see Figure 1 in appendix B to subpart D) to check the ''hangup zero'' response. Simultaneously start a time measurement.

(2) Select the lowest HC range used during the test.

(3) Within four minutes of beginning the time measurement in paragraph (a)(1) of this section, the difference between the span-zero response and the hangup zero response shall not be greater than 5.0 percent of full scale or 10 ppmC whichever is greater.

(b) Begin the analyzer span checks within 6 minutes after the completion of the last mode in the test. Record for each analyzer the zero and span response

(c) If during the test, the filter element(s) were replaced or cleaned, as of § 89.316(a), the test is void.

(d) Record the post-test data specified in § 89.405(f).

(e) For a valid test, the zero and span checks performed before and after each test for each analyzer must meet the following requirements:

(1) The span drift (defined as the change in the difference between the zero response and the span response) must not exceed 3 percent of full-scale chart deflection for each range used.

(2) The zero response drift must not exceed 3 percent of full-scale chart deflection.

[59 FR 31335, June 17, 1994. Redesignated and amended at 63 FR 56996, 57016, Oct. 23, 1998]

§ 89.409 Data logging.

(a) A computer or any other automatic data processing device(s) may be used as long as the system meets the requirements of this subpart.

(b) Determine from the data collection records the analyzer responses corresponding to the end of each mode.

(c) Record data at a minimum of once every 5 seconds.

(d) Determine the final value for CO_2, CO, HC, and NO_X concentrations by averaging the concentration of each point taken during the sample period for each mode.

(e) For purposes of this section, calibration data includes calibration curves, linearity curves, span-gas responses, and zero-gas responses.

[59 FR 31335, June 17, 1994. Redesignated at 63 FR 56996, Oct. 23, 1998]

§ 89.410 Engine test cycle.

(a) Emissions shall be measured using one of the test cycles specified in tables 1 through 4 of appendix B of this subpart, subject to the provisions of paragraphs (a)(1) through (a)(4) of this section. These cycles shall be used to test engines on a dynamometer.

(1) The 8-mode test cycle described in table 1 of appendix B of this subpart shall be used for all engines, except constant speed engines, engines rated under 19 kW, and propulsion marine diesel engines.

(2) The 5-mode test cycle described in table 2 of appendix B of this subpart shall be used for constant-speed engines as defined in § 89.2. Any engine certified under this test cycle must meet the labeling requirements of § 89.110(b)(11).

(3) The 6-mode test cycle described in table 3 of appendix B of this subpart

shall be used for variable speed engines rated under 19 kW.

(4) Notwithstanding the provisions of paragraphs (a)(1) through (a)(3) of this section, the 4-mode test cycle described in table 4 of appendix B of this subpart shall be used for propulsion marine diesel engines.

(5) Notwithstanding the provisions of paragraphs (a)(1) through (a)(4) of this section:

(i) Manufacturers may use the 8-mode test cycle described in table 1 of appendix B of this subpart for:

(A) Constant speed engines, or variable speed engines rated under 19 kW; or

(B) Propulsion marine diesel engines, provided the propulsion marine diesel engines are certified in an engine family that includes primarily non-marine diesel engines, and the manufacturer obtains advance approval from the Administrator.

(ii) The Administrator may use the 8-mode test cycle specified in table 1 of appendix B of this subpart during testing of any engine which was certified based on emission data collected from that test cycle.

(b) During each non-idle mode, hold the specified load to within 2 percent of the engine maximum value and speed to within ±2 percent of point. During each idle mode, speed must be held within the manufacturer's specifications for the engine, and the throttle must be in the fully closed position and torque must not exceed 5 percent of the peak torque value of mode 5.

(c) For any mode except those involving either idle or full-load operation, if the operating conditions specified in paragraph (b) of this section cannot be maintained, the Administrator may authorize deviations from the specified load conditions. Such deviations shall not exceed 10 percent of the maximum torque at the test speed. The minimum deviations above and below the specified load necessary for stable operation shall be determined by the manufacturer and approved by the Administrator prior to the test run.

(d) Power generated during the idle mode may not be included in the calculation of emission results.

(e) Manufacturers may optionally use the ramped-modal duty cycles corresponding to the discrete-mode duty cycles specified in this section, as described in 40 CFR 1039.505.

[59 FR 31335, June 17, 1994. Redesignated and amended at 63 FR 56996, 57016, Oct. 23, 1998; 70 FR 40445, July 13, 2005]

§ 89.411 Exhaust sample procedure—gaseous components.

(a) *Automatic data collection equipment requirements.* The analyzer response may be read by automatic data collection (ADC) equipment such as computers, data loggers, and so forth. If ADC equipment is used, the following is required:

(1) For bag sample analysis, the analyzer response must be stable at greater than 99 percent of the final reading for the dilute exhaust sample bag. A single value representing the average chart deflection over a 10-second stabilized period shall be stored.

(2) For continuous analysis systems, a single value representing the average integrated concentration over a cycle shall be stored.

(3) The chart deflections or average integrated concentrations required in paragraphs (a)(1) and (a)(2) of this section may be stored on long-term computer storage devices such as computer tapes, storage discs, punch cards, and so forth, or they may be printed in a listing for storage. In either case a chart recorder is not required and records from a chart recorder, if they exist, need not be stored.

(4) If ADC equipment is used to interpret analyzer values, the ADC equipment is subject to the calibration specifications of the analyzer as if the ADC equipment is part of analyzer system.

(b) Data records from any one or a combination of analyzers may be stored as chart recorder records.

(c) *Bag sample analysis.* For bag sample analysis perform the following sequence:

(1) Warm up and stabilize the analyzers; clean and/or replace filter elements, conditioning columns (if used), and so forth, as necessary.

(2) Obtain a stable zero reading.

(3) Zero and span the analyzers with zero and span gases. The span gases must have concentrations between 75 and 100 percent of full-scale chart deflection. The flow rates and system

pressures during spanning shall be approximately the same as those encountered during sampling. A sample bag may be used to identify the required analyzer range.

(4) Recheck zero response. If this zero response differs from the zero response recorded in paragraph (c)(3) of this section by more than 1 percent of full scale, then paragraphs (c)(2), (c)(3), and (c)(4) of this section must be repeated.

(5) If a chart recorder is used, identify and record the most recent zero and span response as the pre-analysis values.

(6) If ADC equipment is used, electronically record the most recent zero and span response as the pre-analysis values.

(7) Measure HC, CO, CO_2, and NO_X background concentrations in the sample bag(s) with approximately the same flow rates and pressures used in paragraph (c)(3) of this section. (Constituents measured continuously do not require bag analysis.)

(8) A post-analysis zero and span check of each range must be performed and the values recorded. The number of events that may occur between the pre- and post-analysis checks is not specified. However, the difference between pre-analysis zero and span values (recorded in paragraph (c)(5) or (c)(6) of this section) versus those recorded for the post-analysis check may not exceed the zero drift limit or the span drift limit of 2 percent of full-scale chart deflection for any range used. Otherwise the test is void.

(d) *Continuous sample analysis.* For continuous sample analysis perform the following sequence:

(1) Warm up and stabilize the analyzers; clean and/or replace filter elements, conditioning columns (if used), and so forth, as necessary.

(2) Leak check portions of the sampling system that operate at negative gauge pressures when sampling, and allow heated sample lines, filters, pumps, and so forth to stabilize at operating temperature.

(3) Optional: Perform a hangup check for the HFID sampling system:

(i) Zero the analyzer using zero air introduced at the analyzer port.

(ii) Flow zero air through the overflow sampling system. Check the analyzer response.

(iii) If the overflow zero response exceeds the analyzer zero response by 2 percent or more of the HFID full-scale deflection, hangup is indicated and corrective action must be taken.

(iv) The complete system hangup check specified in paragraph (e) of this section is recommended as a periodic check.

(4) Obtain a stable zero reading.

(5) Zero and span each range to be used on each analyzer operated prior to the beginning of the test cycle. The span gases shall have a concentration between 75 and 100 percent of full-scale chart deflection. The flow rates and system pressures shall be approximately the same as those encountered during sampling. The HFID analyzer shall be zeroed and spanned either through the overflow sampling system or through the analyzer port.

(6) Re-check zero response. If this zero response differs from the zero response recorded in paragraph (d)(5) of this section by more than 1 percent of full scale, then paragraphs (d)(4), (d)(5), and (d)(6) of this section must be repeated.

(7) If a chart recorder is used, identify and record the most recent zero and span response as the pre-analysis values.

(8) If ADC equipment is used, electronically record the most recent zero and span response as the pre-analysis values.

(9) Collect background HC, CO, CO_2, and NO_X in a sample bag (for dilute exhaust sampling only, see § 89.420).

(10) Perform a post-analysis zero and span check for each range used at the conditions specified in paragraph (d)(5) of this section. Record these responses as the post-analysis values.

(11) Neither the zero drift nor the span drift between the pre-analysis and post-analysis checks on any range used may exceed 3 percent for HC, or 2 percent for NO_X. CO, and CO_2, of full scale chart deflection, or the test is void. (If the HC drift is greater than 3 percent of full-scale chart deflection, hydrocarbon hangup is likely.)

(12) Determine background levels of NO_X. CO, or CO_2 (for dilute exhaust

sampling only) by the bag sample technique outlined in paragraph (c) of this section.

(e) *Hydrocarbon hangup*. If HC hangup is indicated, the following sequence may be performed:

(1) Fill a clean sample bag with background air.

(2) Zero and span the HFID at the analyzer ports.

(3) Analyze the background air sample bag through the analyzer ports.

(4) Analyze the background air through the entire sample probe system.

(5) If the difference between the readings obtained greater than or equal to 2 percent of full scale deflection, clean the sample probe and the sample line.

(6) Reassemble the sample system, heat to specified temperature, and repeat the procedure in paragraphs (e)(1) through (e)(6) of this section.

[59 FR 31335, June 17, 1994. Redesignated and amended at 63 FR 56996, 57016, Oct. 23, 1998]

§ 89.412 Raw gaseous exhaust sampling and analytical system description.

(a) *Schematic drawing*. An example of a sampling and analytical system which may be used for testing under this subpart is shown in Figure 1 in appendix B to subpart D. All components or parts of components that are wetted by the sample or corrosive calibration gases shall be either chemically cleaned stainless steel or inert material, for example, polytetrafluoroethylene resin. The use of ''gauge savers'' or ''protectors'' with nonreactive diaphragms to reduce dead volumes is permitted.

(b) *Sample probe*. (1) The sample probe shall be a straight, closed-end, stainless steel, multi-hole probe. The inside diameter shall not be greater than the inside diameter of the sample line plus 0.03 cm. The wall thickness of the probe shall not be greater than 0.10 cm. The fitting that attaches the probe to the exhaust pipe shall be as small as practical in order to minimize heat loss from the probe.

(2) The probe shall have a minimum of three holes. The spacing of the radial planes for each hole in the probe must be such that they cover approximately equal cross-sectional areas of the exhaust duct. See Figure 1 in appendix A to this subpart. The angular spacing of the holes must be approximately equal. The angular spacing of any two holes in one plane may not be 180° ±20° (that is, section view C-C of Figure 1 in appendix A to this subpart). The holes should be sized such that each has approximately the same flow. If only three holes are used, they may not all be in the same radial plane.

(3) The probe shall extend radially across the exhaust duct. The probe must pass through the approximate center and must extend across at least 80 percent of the diameter of the duct.

(c) *Sample transfer line*. (1) The maximum inside diameter of the sample line shall not exceed 1.32 cm.

(2) If valve *V2* is used, the sample probe must connect directly to valve *V2*. The location of optional valve *V2* may not be greater than 1.22 m from the exhaust duct.

(3) The location of optional valve V16 may not be greater than 61 cm from the sample pump.

(d) *Venting*. All vents, including analyzer vents, bypass flow, and pressure relief vents of regulators, should be vented in such a manner to avoid endangering personnel in the immediate area.

(e) Any variation from the specifications in this subpart including performance specifications and emission detection methods may be used only with prior approval by the Administrator.

(f) Additional components, such as instruments, valves, solenoids, pumps, switches, and so forth, may be employed to provide additional information and coordinate the functions of the component systems.

(g) The following requirements must be incorporated in each system used for raw testing under this subpart.

(1) [Reserved]

(2) The sample transport system from the engine exhaust pipe to the HC analyzer and the NO_X analyzer must be heated as indicated in Figure 1 in appendix B of subpart D.

[59 FR 31335, June 17, 1994. Redesignated and amended at 63 FR 56996, 57016, Oct. 23, 1998]

§ 89.413 Raw sampling procedures.

Follow these procedures when sampling for gaseous emissions.

(a) The gaseous emission sampling probe must be installed at least 0.5 m or 3 times the diameter of the exhaust pipe—whichever is the larger—upstream of the exit of the exhaust gas system.

(b) In the case of a multi-cylinder engine with a branched exhaust manifold, the inlet of the probe shall be located sufficiently far downstream so as to ensure that the sample is representative of the average exhaust emissions from all cylinders.

(c) In multi-cylinder engines having distinct groups of manifolds, such as in a ''Vee'' engine configuration, it is permissible to:

(1) Sample after all exhaust pipes have been connected together into a single exhaust pipe.

(2) For each mode, sample from each exhaust pipe and average the gaseous concentrations to determine a value for each mode.

(3) Sample from all exhaust pipes simultaneously with the sample lines connected to a common manifold prior to the analyzer. It must be demonstrated that the flow rate through each individual sample line is ±4 percent of the average flow rate through all the sample lines.

(4) Use another method, if it has been approved in advance by the Administrator.

(d) All gaseous heated sampling lines shall be fitted with a heated filter to extract solid particles from the flow of gas required for analysis. The sample line for CO and CO_2 analysis may be heated or unheated.

[59 FR 31335, June 17, 1994. Redesignated and amended at 63 FR 56996, 57016, Oct. 23, 1998]

§ 89.414 Air flow measurement specifications.

(a) The air flow measurement method used must have a range large enough to accurately measure the air flow over the engine operating range during the test. Overall measurement accuracy must be ±2 percent of the maximum engine value for all modes. The Administrator must be advised of the method used prior to testing.

(b) When an engine system incorporates devices that affect the air flow measurement (such as air bleeds) that result in understated exhaust emission results, corrections to the exhaust emission results shall be made to account for such effects.

[59 FR 31335, June 17, 1994. Redesignated and amended at 63 FR 56996, 57017, Oct. 23, 1998]

§ 89.415 Fuel flow measurement specifications.

The fuel flow rate measurement instrument must have a minimum accuracy of 2 percent of the engine maximum fuel flow rate. The controlling parameters are the elapsed time measurement of the event and the weight or volume measurement.

[63 FR 57017, Oct. 23, 1998]

§ 89.416 Raw exhaust gas flow.

The exhaust gas flow shall be determined by one of the methods described in this section and conform to the tolerances of table 3 in appendix A to subpart D:

(a) Measurement of the air flow and the fuel flow by suitable metering systems (for details see SAE J244. This procedure has been incorporated by reference. See § 89.6.) and calculation of the exhaust gas flow as follows:

$G_{EXHW} = G_{AIRW} + G_{FUEL}$ (for wet exhaust mass)

or

$V_{EXHD} = V_{AIRD} + (-.767) \times G_{FUEL}$ (for dry exhaust volume)

or

$V_{EXHW} = V_{AIRW} + .749 \times G_{FUEL}$ (for wet exhaust volume)

(b) Exhaust mass calculation from fuel consumption (see § 89.415) and exhaust gas concentrations using the method found in § 89.418.

[59 FR 31335, June 17, 1994. Redesignated at 63 FR 56996, Oct. 23, 1998]

§ 89.417 Data evaluation for gaseous emissions.

For the evaluation of the gaseous emission recording, the last 60 seconds of each mode are recorded, and the average values for HC, CO, CO_2, and NO_X during each mode are determined from

the average concentration readings determined from the corresponding calibration data.

[59 FR 31335, June 17, 1994. Redesignated at 63 FR 56996, Oct. 23, 1998]

§ 89.418 Raw emission sampling calculations.

(a) The final test results shall be derived through the steps described in this section.

(b) The exhaust gas flow rate G_{EXHW} and V_{EXHW} shall be determined for each mode.

(1) For measurements using the mass flow method, see § 89.416(a).

(2) For measurements using the fuel consumption and exhaust gas concentrations method, use the following equations:

$$G_{EXHW} = G_{fuel} + G_{aird}\left(1 + \left(\frac{H}{1000}\right)\right)$$

Where:

$$G_{aird} = \frac{G_{fuel}}{(fla)} = \frac{\text{Mass Fuel Measured}}{G_{airw} \times \left(1 - \frac{H}{1000}\right)}$$

$$(fla) = \frac{4.77\,(1+\alpha/4)\,(fla)_{stoich}}{\frac{1}{X} - \left(\frac{DCO}{2X(10)^6}\right) - \left(\frac{DHC}{X(10)^6}\right) + \frac{\alpha}{4}\left(1 - \frac{DHC}{X(10)^6}\right) - \frac{0.75\,\alpha}{\left(\frac{K}{\left(\frac{DCO}{X(10)^6}\right)}\right) + \left(\frac{(1-K)}{\left(1 - \frac{DHC}{X(10)^6}\right)}\right)}}$$

$$(fla)_{Stoich} = \frac{M_c + \alpha M_H}{138.18\,(1+\alpha/4)}$$

$$X = \frac{DCO_2}{10^2} + \frac{DCO}{10^6} + \frac{DHC}{10^6}$$

K = 3.5

(3) Humidity values may be calculated from either one of the following equations:

$$H = \frac{6.22 \times R_a \times p_d}{p_R - \left(p_d \times R_a \times 10^{-2}\right)}$$

or

$$H = \frac{622 \times P_v}{(P_B - P_v)}$$

(c) When applying G_{EXHW}, the measured ''dry'' concentration shall be corrected to a wet basis, if not already measured on a wet basis. This section is applicable only for measurements made on raw exhaust gas. Correction to a wet basis shall be according to the following formula:

$$Conc_{WET} = K_w \times Conc_{DRY}$$

Where:

K_W is determined according to the equations in paragraph (c)(1) or (c)(2) of this section.

(1) For measurements using the mass flow method (see § 89.416(a)):

$$K_W = \left[1 - F_{FH} \times \frac{G_{fuel}}{G_{aird}}\right] - K_{W1}$$

$$F_{FH} = ALF \times 0.1448 \times \frac{1}{1 + \left(\frac{G_{fuel}}{G_{aird}}\right)} \text{ for diesel fuel only}$$

$$ALF = \text{Hydrogen mass percentage of fuel} = \frac{1.008 \times \alpha}{12.01 + 1.008 \times \alpha} \times 100 = 13.12 \text{ for } CH_{1.8}\text{fuel}$$

α = H/C mole ratio of the fuel.

(2) For measurements using the fuel consumption and exhaust gas concentrations method (see § 89.416(b)):

$$K_W = \frac{1}{1 + 1.8 \times 0.005 \times \left[\frac{DCO}{10^4} = DCO_2\right]} - K_{W1}$$

Where:

$$K_{W1} = \frac{1.608 \times H}{1000 + 1.608 \times H}$$

(d) As the NO_X emission depends on intake air conditions, the NO_X concentration shall be corrected for intake air temperature and humidity with the factor K_h given in the following formula. For engines operating on alternative combustion cycles, other correction formulas may be used if they can be justified or validated. The formula follows:

$$K_H = \frac{1}{1 - 0.0182(H - 10.71)}$$

(e) The pollutant mass flow for each mode shall be calculated as follows:

Gas mass = $u \times$ Gas conc. $\times G_{EXHW}$
Gas mass = $v \times$ Gas conc. $\times V_{EXHD}$
Gas mass = $w \times$ Gas conc. $\times V_{EXHW}$

The coefficients u (wet), v (dry), and w (wet) are to be used according to the following table:

Gas	u	v	w	conc.
NO_X	0.001587	0.00205	0.00205	ppm.
CO	0.000966	0.00125	0.00125	ppm.
HC	0.000478		0.000618	ppm.
CO_2	15.19	19.64	19.64	percent.

NOTE: The given coefficients u, v, and w are calculated for 273.15 °K (0 °C) and 101.3 kPa. In cases where the reference conditions vary from those stated, an error may occur in the calculations.

(f) The following equations may be used to calculate the coefficients u, v, and w in paragraph (e) of this section for other conditions of temperature and pressure:

(1) For the calculation of u, v, and w for NO_X (as NO_2), CO, HC (in paragraph (e) of this section as $CH_{1.80}$), CO_2, and O_2:

Where:

w = $4.4615.10^{-5} \times$ M if conc. in ppm
w = $4.4615.10^{-1} \times$ M if conc. in percent
v = w
u = w/ρ_{Air}
M = Molecular weight
ρ_{Air} = Density of dry air at 273.15 °K (0 °C), 101.3 kPa = 1.293 kg/m³

(2) For real gases at 273.15 °K (0 °C) and 101.3 kPa: For the calculation of u, v, and w

w = gas $\times 10^{-6}$ if conc. in ppm
$v = w$
u = w/p_{Air}
p_{Gas} = Density of measured gas at 0 °C, 101.3 kPas in g/m³

(3) General formulas for the calculation of concentrations at temperature (designated as T) and pressure (designated as p):

—for ideal gases

$$\text{conc}\frac{g}{m_3} = \frac{M}{M_v} \times \frac{T_o}{T_o + T} \times \frac{P}{P_o} \quad \frac{\text{Conc(ppm)}}{10^6}$$

—for real gases

$$\text{conc}\frac{g}{m_3} = \rho_{Gas} \times \frac{T_o}{T_o + T} \times \frac{P}{P_o} \quad \frac{\text{Conc(ppm)}}{10^6}$$

with:

1% = 10^4 ppm
M = Molecular weight in g/Mo1
M_v = Molecular Volume = 22.414×10^{-3} m³/Mol for ideal gases
T = reference temperature 273.15 K
p = reference pressure 101.3 kPa
T = Temperature in °C
p = pressure in kPa
p_{Gas} = Density of the measured gas at 0 °C, 101.3 kPa
Conc. = Gas concentration

(g)(1) The emission shall be calculated for all individual components

in the following way where power at idle is equal to zero:

$$\text{individualgas} = \frac{\sum_{i=1}^{i=n}\left(g_i \times WF_i\right)}{\sum_{i=1}^{i=n}\left(P_i \times WF_i\right)}$$

(2) The weighting factors and the number of modes (n) used in the calculation in paragraph (g)(1) of this section are according to § 89.410.

[59 FR 31335, June 17, 1994. Redesignated and amended at 63 FR 56996, 57017, Oct. 23, 1998]

§ 89.419 Dilute gaseous exhaust sampling and analytical system description.

(a) *General*. The exhaust gas sampling system described in this section is designed to measure the true mass of gaseous emissions in the exhaust of petroleum-fueled nonroad compression-ignition engines. This system utilizes the CVS concept (described in 40 CFR part 1065, subparts A and B) of measuring mass emissions of HC, CO, and CO_2. A continuously integrated system is required for HC and NO_X measurement and is allowed for all CO and CO_2 measurements. The mass of gaseous emissions is determined from the sample concentration and total flow over the test period. As an option, the measurement of total fuel mass consumed over a cycle may be substituted for the exhaust measurement of CO_2. General requirements are as follows:

(1) This sampling system requires the use of a PDP-CVS and a heat exchanger or a CFV-CVS with either a heat exchanger or electronic flow compensation. Figure 2 in appendix A to this subpart is a schematic drawing of the PDP-CVS system. Figure 3 in appendix A to this subpart is a schematic drawing of the CFV-CVS system.

(2) The HC analytical system for petroleum-fueled compression-ignition engines requires a heated flame ionization detector (HFID) and heated sample system (191 ±11 °C).

(i) The HFID sample must be taken directly from the diluted exhaust stream through a heated probe and integrated continuously over the test cycle. Unless compensation for varying flow is made, the HFID must be used with a constant flow system to ensure a representative sample.

(ii) The heated probe shall be located in the primary dilution tunnel and far enough downstream of the mixing chamber to ensure a uniform sample distribution across the CVS duct at the point of sampling.

(3) The CO and CO_2 analytical system requires:

(i) Bag sampling (see 40 CFR part 1065) and analytical capabilities (see 40 CFR part 1065), as shown in Figure 2 and Figure 3 in appendix A to this subpart; or

(ii) Continuously integrated measurement of diluted CO and CO_2 meeting the minimum requirements and technical specifications contained in paragraph (b)(4) of this section. Unless compensation for varying flow is made, a constant flow system must be used to ensure a representative sample.

(4) The NO_X analytical system requires a continuously integrated measurement of diluted NO_X meeting the minimum requirements and technical specifications contained in paragraph (b)(4) of this section. Unless compensation for varying flow is made, a constant flow system must be used to ensure a representative sample.

(5) Since various configurations can produce equivalent results, exact conformance with these drawings is not required. Additional components such as instruments, valves, solenoids, pumps, and switches may be used to provide additional information and coordinate the functions of the component systems. Other components, such as snubbers, which are not needed to maintain

accuracy on some systems, may be excluded if their exclusion is based upon good engineering judgment.

(6) Other sampling and/or analytical systems may be used if shown to yield equivalent results and if approved in advance by the Administrator.

(b) *Component description*. The components necessary for exhaust sampling shall meet the following requirements:

(1) *Exhaust dilution system*. The PDP–CVS shall conform to all of the requirements listed for the exhaust gas PDP–CVS in 40 CFR part 1065. The CFV–CVS shall conform to all the requirements listed for the exhaust gas CFV–CVS in 40 CFR part 1065. In addition, the CVS must conform to the following requirements:

(i) The flow capacity of the CVS must be sufficient to maintain the diluted exhaust stream at or below the temperature required for the measurement of hydrocarbon emissions noted in the following paragraph and to prevent condensation of water at any point in the dilution tunnel.

(ii) The flow capacity of the CVS must be sufficient to maintain the diluted exhaust stream in the primary dilution tunnel at a temperature of 191 °C or less at the sampling zone for hydrocarbon measurement and as required to prevent condensation at any point in the dilution tunnel. Gaseous emission samples may be taken directly from this sampling point.

(iii) For the CFV-CVS, either a heat exchanger or electronic flow compensation is required (see Figure 3 in appendix A to this subpart).

(iv) For the CFV-CVS when a heat exchanger is used, the gas mixture temperature, measured at a point immediately ahead of the critical flow venturi, shall be within ±11 °C) of the average operating temperature observed during the test with the simultaneous requirement that condensation does not occur. The temperature measuring system (sensors and readout) shall have an accuracy and precision of ±2 °C. For systems utilizing a flow compensator to maintain proportional flow, the requirement for maintaining constant temperature is not necessary.

(v) The primary dilution air shall have a temperature of 25 °C ±5 °C.

(2) *Continuous HC measurement system*. (i) The continuous HC sample system (as shown in Figure 2 or 3 in appendix A to this subpart) uses an ''overflow'' zero and span system. In this type of system, excess zero or span gas spills out of the probe when zero and span checks of the analyzer are made. The ''overflow'' system may also be used to calibrate the HC analyzer according to 40 CFR part 1065, subpart F, although this is not required.

(ii) No other analyzers may draw a sample from the continuous HC sample probe, line or system, unless a common sample pump is used for all analyzers and the sample line system design reflects good engineering practice.

(iii) The overflow gas flow rates into the sample line shall be at least 105 percent of the sample system flow rate.

(iv) The overflow gases shall enter the heated sample line as close as practical to the outside surface of the CVS duct or dilution tunnel.

(v) The continuous HC sampling system shall consist of a probe (which must raise the sample to the specified temperature) and, where used, a sample transfer system (which must maintain the specified temperature). The continuous hydrocarbon sampling system (exclusive of the probe) shall:

(A) Maintain a wall temperature of 191 °C ±11 °C as measured at every separately controlled heated component (that is, filters, heated line sections), using permanent thermocouples located at each of the separate components.

(B) Have a wall temperature of 191 °C ±11 °C over its entire length. The temperature of the system shall be demonstrated by profiling the thermal characteristics of the system where possible at initial installation and after any major maintenance performed on the system. The profiling shall be accomplished using the insertion thermocouple probing technique. The system temperature will be monitored continuously during testing at the locations and temperature described in 40 CFR 1065.145.

(C) Maintain a gas temperature of 191 °C ±11 °C immediately before the heated filter and HFID. These gas temperatures will be determined by a temperature sensor located immediately upstream of each component.

(vi) The continuous hydrocarbon sampling probe shall:

(A) Be defined as the first 25 cm to 76 cm of the continuous hydrocarbon sampling system.

(B) Have a 0.48 cm minimum inside diameter.

(C) Be installed in the primary dilution tunnel at a point where the dilution air and exhaust are well mixed (that is, approximately 10 tunnel diameters downstream of the point where the exhaust enters the dilution tunnel).

(D) Be sufficiently distant (radially) from other probes and the tunnel wall so as to be free from the influence of any wakes or eddies.

(E) Increase the gas stream temperature to 191 °C ±11 °C at the exit of the probe. The ability of the probe to accomplish this shall be demonstrated using the insertion thermocouple technique at initial installation and after any major maintenance. Compliance with the temperature specification shall be demonstrated by continuously recording during each test the temperature of either the gas stream or the wall of the sample probe at its terminus.

(vii) The response time of the continuous measurement system shall be no greater than:

(A) 1.5 seconds from an instantaneous step change at the port entrance to the analyzer to within 90 percent of the step change.

(B) 20 seconds from an instantaneous step change at the entrance to the sample probe or overflow span gas port to within 90 percent of the step change. Analysis system response time shall be coordinated with CVS flow fluctuations and sampling time/test cycle offsets if necessary.

(C) For the purpose of verification of response times, the step change shall be at least 60 percent of full-scale chart deflection.

(3) *Primary dilution tunnel.* (i) The primary dilution tunnel shall be:

(A) Small enough in diameter to cause turbulent flow (Reynolds Number greater than 4000) and of sufficient length to cause complete mixing of the exhaust and dilution air;

(B) At least 46 cm in diameter; (engines below 110 kW may use a dilution tunnel that is 20 cm in diameter or larger)

(C) Constructed of electrically conductive material which does not react with the exhaust components; and

(D) Electrically grounded.

(ii) The temperature of the diluted exhaust stream inside of the primary dilution tunnel shall be sufficient to prevent water condensation.

(iii) The engine exhaust shall be directed downstream at the point where it is introduced into the primary dilution tunnel.

(4) *Continuously integrated NO_X.* CO, and CO_2 *measurement systems.* (i) The sample probe shall:

(A) Be in the same plane as the continuous HC probe, but shall be sufficiently distant (radially) from other probes and the tunnel wall so as to be free from the influences of any wakes or eddies.

(B) Heated and insulated over the entire length, to prevent water condensation, to a minimum temperature of 55 °C. Sample gas temperature immediately before the first filter in the system shall be at least 55 °C.

(ii) The continuous NO_X, CO, or CO_2 sampling and analysis system shall conform to the specifications of 40 CFR 1065.145 with the following exceptions and revisions:

(A) The system components required to be heated by 40 CFR 1065.145 need only be heated to prevent water condensation, the minimum component temperature shall be 55 °C.

(B) The system response shall meet the specifications in 40 CFR part 1065, subpart C.

(C) Alternative NO_X measurement techniques outlined in 40 CFR part 1065, subpart D, are not permitted for NO_X measurement in this subpart.

(D) All analytical gases must conform to the specifications of § 89.312.

(E) Any range on a linear analyzer below 155 ppm must have and use a calibration curve conforming to § 89.310.

(iii) The chart deflections or voltage output of analyzers with non-linear

calibration curves shall be converted to concentration values by the calibration curve(s) specified in § 89.313 before flow correction (if used) and subsequent integration takes place.

[59 FR 31335, June 17, 1994. Redesignated at 63 FR 56996, Oct. 23, 1998, as amended at 70 FR 40445, July 13, 2005]

§ 89.420 Background sample.

(a) Background samples are produced by continuously drawing a sample of dilution air during the exhaust collection phase of each test cycle mode.

(1) Individual background samples may be produced and analyzed for each mode. Hence, a unique background value will be used for the emission calculations for each mode.

(2) Alternatively, a single background sample may be produced by drawing a sample during the collection phase of each of the test cycle modes. Hence, a single cumulative background value will be used for the emission calculations for each mode.

(b) For analysis of the individual sample described in paragraph (a)(1) of this section, a single value representing the average chart deflection over a 10-second stabilized period is stored. All readings taken during the 10-second interval must be stable at the final value to within ±1 percent of full scale.

(c) Measure HC, CO, CO_2, and NO_X exhaust and background concentrations in the sample bag(s) with approximately the same flow rates and pressures used during calibration.

[59 FR 31335, June 17, 1994. Redesignated and amended at 63 FR 56996, 57018, Oct. 23, 1998]

§ 89.421 Exhaust gas analytical system; CVS bag sample.

(a) *Schematic drawings*. Figure 4 in appendix A to this subpart is a schematic drawing of the exhaust gas analytical system used for analyzing CVS bag samples from compression- ignition engines. Since various configurations can produce accurate results, exact conformance with the drawing is not required. Additional components such as instruments, valves, solenoids, pumps and switches may be used to provide additional information and coordinate the functions of the component systems. Other components such as snubbers, which are not needed to maintain accuracy in some systems, may be excluded if their exclusion is based upon good engineering judgment.

(b) *Major component description*. The analytical system, Figure 4 in appendix A to this subpart, consists of a flame ionization detector (FID) (heated for petroleum-fueled compression-ignition engines to 191 °C ±6 °C) for the measurement of hydrocarbons, nondispersive infrared analyzers (NDIR) for the measurement of carbon monoxide and carbon dioxide, and a chemiluminescence detector (CLD) (or HCLD) for the measurement of oxides of nitrogen. The exhaust gas analytical system shall conform to the following requirements:

(1) The CLD (or HCLD) requires that the nitrogen dioxide present in the sample be converted to nitric oxide before analysis. Other types of analyzers may be used if shown to yield equivalent results and if approved in advance by the Administrator.

(2) If CO instruments are used which are essentially free of CO_2 and water vapor interference, the use of the conditioning column may be deleted. (See 40 CFR part 1065, subpart D.)

(3) A CO instrument will be considered to be essentially free of CO_2 and water vapor interference if its response to a mixture of 3 percent CO_2 in N2, which has been bubbled through water at room temperature, produces an equivalent CO response, as measured on the most sensitive CO range, which is less than 1 percent of full scale CO concentration on ranges above 300 ppm full scale or less than 3 ppm on ranges below 300 ppm full scale. (See 40 CFR part 1065, subpart D.)

(c) *Alternate analytical systems*. Alternate analysis systems meeting the specifications of 40 CFR part 1065, subpart A, may be used for the testing required under this subpart. Heated analyzers may be used in their heated configuration.

(d) Other analyzers and equipment. Other types of analyzers and equipment may be used if shown to yield equivalent results and if approved in advance by the Administrator.

[59 FR 31335, June 17, 1994. Redesignated at 63 FR 56996, Oct. 23, 1998, as amended at 70 FR 40446, July 13, 2005]

§ 89.422 Dilute sampling procedures—CVS calibration.

(a) The CVS is calibrated using an accurate flowmeter and restrictor valve.

(1) The flowmeter calibration must be traceable to NIST measurements, and will serve as the reference value (NIST ''true'' value) for the CVS calibration. (Note: In no case should an upstream screen or other restriction which can affect the flow be used ahead of the flowmeter unless calibrated throughout the flow range with such a device.)

(2) The CVS calibration procedures are designed for use of a ''metering venturi'' type flowmeter. Large radius or ASME flow nozzles are considered equivalent if traceable to NIST measurements. Other measurement systems may be used if shown to be equivalent under the test conditions in this section and traceable to NIST measurements.

(3) Measurements of the various flowmeter parameters are recorded and related to flow through the CVS.

(4) Procedures used by EPA for both PDP-CVS and CFV-CVS are outlined below. Other procedures yielding equivalent results may be used if approved in advance by the Administrator.

(b) After the calibration curve has been obtained, verification of the entire system may be performed by injecting a known mass of gas into the system and comparing the mass indicated by the system to the true mass injected. An indicated error does not necessarily mean that the calibration is wrong, since other factors can influence the accuracy of the system (for example, analyzer calibration, leaks, or HC hangup). A verification procedure is found in paragraph (e) of this section.

(c) *PDP-CVS calibration*. (1) The following calibration procedure outlines the equipment, the test configuration, and the various parameters which must be measured to establish the flow rate of the PDP-CVS pump.

(i) All the parameters related to the pump are simultaneously measured with the parameters related to a flowmeter which is connected in series with the pump.

(ii) The calculated flow rate, in (cm^3/s), (at pump inlet absolute pressure and temperature) can then be plotted versus a correlation function which is the value of a specific combination of pump parameters.

(iii) The linear equation which relates the pump flow and the correlation function is then determined.

(iv) In the event that a CVS has a multiple speed drive, a calibration for each range used must be performed.

(2) This calibration procedure is based on the measurement of the absolute values of the pump and flowmeter parameters that relate the flow rate at each point. Two conditions must be maintained to assure the accuracy and integrity of the calibration curve:

(i) The temperature stability must be maintained during calibration. (Flowmeters are sensitive to inlet temperature oscillations; this can cause the data points to be scattered. Gradual changes in temperature are acceptable as long as they occur over a period of several minutes.)

(ii) All connections and ducting between the flowmeter and the CVS pump must be absolutely void of leakage.

(3) During an exhaust emission test the measurement of these same pump parameters enables the user to calculate the flow rate from the calibration equation.

(4) Connect a system as shown in Figure 5 in appendix A to this subpart. Although particular types of equipment are shown, other configurations that yield equivalent results may be used if approved in advance by the Administrator. For the system indicated, the following measurements and accuracies are required:

CALIBRATION DATA MEASUREMENTS

Parameter	Symbol	Units	Sensor-readout tolerances
Barometric pressure (corrected)	P_B	kPa	±.34 kPa
Ambient temperature	T_A	°C	±.3 °C
Air temperature into metering venturi	*ETI*	°C	±1.1 °C

CALIBRATION DATA MEASUREMENTS—Continued

Parameter	Symbol	Units	Sensor-readout tolerances
Pressure drop between the inlet and throat of metering venturi.	*EDP*	kPa	±.01 kPa
Air flow	Q_S	m³/min	±.5% of NIST value.
Air temperature at CVS pump inlet	*PTI*	°C	±1.1 °C
Pressure depression at CVS pump inlet	*PPI*	kPa	±.055 kPa
Pressure head at CVS pump outlet	*PPO*	kPa	±.055 kPa
Air temperature at CVS pump outlet (optional)	*PTO*	°C	±1.1 °C
Pump revolutions during test period	*N*	Revs	±1 Rev.
Elapsed time for test period	*t*	s	±.5 s.

(5) After the system has been connected as shown in Figure 5 in appendix A to this subpart, set the variable restrictor in the wide open position and run the CVS pump for 20 minutes. Record the calibration data.

(6) Reset the restrictor valve to a more restricted condition in an increment of pump inlet depression that will yield a minimum of six data points for the total calibration. Allow the system to stabilize for 3 minutes and repeat the data acquisition.

(7) Data analysis:

(i) The air flow rate, Q_s, at each test point is calculated in standard cubic meters per minute (0 °C, 101.3 kPa) from the flowmeter data using the manufacturer's prescribed method.

(ii) The air flow rate is then converted to pump flow, V_o, in cubic meter per revolution at absolute pump inlet temperature and pressure:

$$V_o = \frac{Q_s}{n} \times \frac{T_p}{273} \times \frac{101.3}{P_p}$$

Where:

V_o = Pump flow, (m³/rev) at T_p, P_p.

Q_s = Meter air flow rate in standard cubic meters per minute, standard conditions are 0 °C, 101.3 kPa.

n=Pump speed in revolutions per minute.

T_p=Pump inlet temperature °K=P_{ti}+273 °K, P_{ti}=Pump inlet temp °C

P_p=Absolute pump inlet pressure, (kPa) = $P_B - P_{PI}$

Where:

P_B=barometric pressure, (kPa).

P_{PI}=Pump inlet depression, (kPa).

(iii) The correlation function at each test point is then calculated from the calibration data:

$$X_o = \frac{1}{n}\sqrt{\left(\frac{\Delta p}{P_e}\right)}$$

X_o = correlation function.

Δp = The pressure differential from pump inlet to pump outlet, (kPa). = $P_e - P_p$.

P_e = Absolute pump outlet pressure, (kPa) = $P_B + P_{PO}$

Where:

P_{PO}=Pressure head at pump outlet, (kPa).

(iv) A linear least squares fit is performed to generate the calibration equation which has the form:

$V_o = D_o - M(X_o)$

D_o and M are the intercept and slope constants, respectively, describing the regression line.

(8) A CVS system that has multiple speeds must be calibrated on each speed used. The calibration curves generated for the ranges will be approximately parallel and the intercept values, D_o, will increase as the pump flow range decreases.

(9) If the calibration has been performed carefully, the calculated values from the equation will be within ±0.50 percent of the measured value of V_o. Values of M will vary from one pump to another, but values of D_o for pumps of the same make, model, and range should agree within ±3 percent of each other. Calibrations should be performed at pump start-up and after major maintenance to assure the stability of the pump slip rate. Analysis of mass injection data will also reflect pump slip stability.

(d) *CFV-CVS calibration.* (1) Calibration of the CFV is based upon the flow equation for a critical venturi. Gas flow is a function of inlet pressure and temperature:

$$Q_s = \frac{K_v P}{\sqrt{T}}$$

Where:

Qs = flow.
Kv = calibration coefficient.
P = absolute pressure.
T = absolute temperature.

The calibration procedure described in paragraph (d)(3) of this section establishes the value of the calibration coefficient at measured values of pressure, temperature, and air flow.

(2) The manufacturer's recommended procedure shall be followed for calibrating electronic portions of the CFV.

(3) Measurements necessary for flow calibration are as follows:

CALIBRATION DATA MEASUREMENTS

Parameter	Symbol	Units	Tolerances
Barometric pressure (corrected)	P_B	kPa (Inches Hg)	0.034 (0.01).
Air temperature, flowmeter	ETI	deg.C (deg.F)	0.14 (0.25).
Pressure depression upstream of LFE	EPI	kPa(Inches H_2O)	0.012 (0.05).
Pressure drop across LFE matrix	EDP	kPa (Inches H_2O)	0.001 (0.005).
Air flow	Q_s	m^3/min. (Ft^3/min)	0.5 pct.
CFV inlet depression	PPI	kPa (Inches Hg)	0.055 (0.016).
CFV outlet pressure	PPO	kPa (Inches Hg)	0.17 (0.05).
Temperature at venturi inlet	T_v	deg.C (deg.F)	0.28 (0.5)
Specific gravity of manometer fluid	Sp.Gr		(1.75 oil).

(4) Set up equipment as shown in Figure 6 in appendix A to subpart and eliminate leaks. (Leaks between the flow measuring devices and the critical flow venturi will seriously affect the accuracy of the calibration.)

(5) Set the variable flow restrictor to the open position, start the blower, and allow the system to stabilize. Record data from all instruments.

(6) Vary the flow restrictor and make at least eight readings across the critical flow range of the venturi.

(7) *Data analysis*. The data recorded during the calibration are to be used in the following calculations:

(i) The air flow rate (designated as Q_s) at each test point is calculated in standard cubic feet per minute from the flow meter data using the manufacturer's prescribed method.

(ii) Calculate values of the calibration coefficient for each test point:

$$K_v = \frac{Q_s \sqrt{T_v}}{P_v}$$

Where:

Q_s = Flow rate in standard cubic meter per minute, at the standard conditions of 0 °C, 101.3 kPa.
T_v = Temperature at venturi inlet, °K.
P_v = PB - PPI (= Pressure at venturi inlet, kPA)

Where:

P_{PI} = Venturi inlet pressure depression, (kPa).

(iii) Plot K_v as a function of venturi inlet pressure. For choked flow, K_v will have a relatively constant value. As pressure decreases (vacuum increases), the venturi becomes unchoked and K_v decreases. (See Figure 7 in appendix A to this subpart.)

(iv) For a minimum of eight points in the critical region calculate an average K_v and the standard deviation.

(v) If the standard deviation exceeds 0.3 percent of the average K_v, take corrective action.

(e) *CVS system verification*. The following ''gravimetric'' technique can be used to verify that the CVS and analytical instruments can accurately measure a mass of gas that has been injected into the system. (Verification can also be accomplished by constant flow metering using critical flow orifice devices.)

(1) Obtain a small cylinder that has been charged with 99.5 percent or greater propane or carbon monoxide gas (Caution—carbon monoxide is poisonous).

(2) Determine a reference cylinder weight to the nearest 0.01 grams.

(3) Operate the CVS in the normal manner and release a quantity of pure propane into the system during the sampling period (approximately 5 minutes).

(4) The calculations are performed in the normal way except in the case of propane. The density of propane (0.6109 kg/m^3/carbon atom)) is used in place of the density of exhaust hydrocarbons.

(5) The gravimetric mass is subtracted from the CVS measured mass and then divided by the gravimetric mass to determine the percent accuracy of the system.

(6) Good engineering practice requires that the cause for any discrepancy greater than ±2 percent must be found and corrected.

[59 FR 31335, June 17, 1994. Redesignated and amended at 63 FR 56996, 57018, Oct. 23, 1998]

§ 89.423 [Reserved]

§ 89.424 Dilute emission sampling calculations.

(a) The final reported emission test results are computed by use of the following formula:

$$A_{WM} = \frac{\sum_{i=1}^{i=n}\left(g_i \times WF_i\right)}{\sum_{i=1}^{i=n}\left(P_i \times WF_i\right)}$$

Where:

A_{wm} = Weighted mass emission level (HC, CO, CO_2, PM, or NO_X) in g/kW-hr.

g_i = Mass flow in grams per hour, = grams measured during the mode divided by the sample time for the mode.

WF_i = Effective weighing factor.

P_i = Power measured during each mode (Power set = zero for the idle mode).

(b) The mass of each pollutant for each mode for bag measurements and diesel heat exchanger system measurements is determined from the following equations:

(1) Hydrocarbon mass:

$$HC_{mass} = V_{mix} \times Density_{HC} \times (HC_{conc}/10^6)$$

(2) Oxides of nitrogen mass:

$$NO_{Xmass} = V_{mix} \times Density_{NO2} \times KH \times (NO_{Xconc}/10^6)$$

(3) Carbon monoxide mass:

$$CO_{mass} = V_{mix} \times Density_{CO} \times (CO_{conc}/10^6)$$

(4) Carbon dioxide mass:

$$CO_{2mass} = V_{mix} \times Density_{CO2} \times (CO_{2conc}/10_2)$$

(c) The mass of each pollutant for the mode for flow compensated sample systems is determined from the following equations:

$$HC_{mass} = V_{mix} \times Density_{HC} \frac{HC_e - HC_d\left(1 - \frac{1}{DF}\right)}{10^6}$$

$$NOX_{mass} = K_H \frac{NOX_e - NOX_d\left(1 - \frac{1}{DF}\right)}{10^6} V_{mix} \times Density_{NO_2}$$

$$CO_{mass} = V_{mix} \times Density_{CO} \frac{CO_c - CO_d\left(1 - \frac{1}{DF}\right)}{10^6}$$

$$CO_{2_{mass}} = V_{mix} \times Density_{CO_2} \frac{CO_{2_e} - CO_{2_d}\left(1 - \frac{1}{DF}\right)}{10^6}$$

(d) Meaning of symbols:

(1) For hydrocarbon equations:

HC_{mass}= Hydrocarbon emissions, in grams per test mode.

$Density_{HC}$= Density of hydrocarbons is (.5800 kg/m³) for #1 diesel, and (0.5746 kg/m³) for #2 diesel, assuming an average carbon to hydrogen ratio of 1:1.93 for #1 diesel, and 1:1.80 for #2 diesel at 20 °C and 101.3 kPa pressure.

HC_{conc}= Hydrocarbon concentration of the dilute exhaust sample corrected for background, in ppm carbon equivalent (that is, equivalent propane times 3).

$$HC_{conc} = HC_e - HC_d\left(1 - \frac{1}{DF}\right)$$

Where:

HC_e= Hydrocarbon concentration of the dilute exhaust bag sample or, for diesel heat exchanger systems, average hydrocarbon concentration of the dilute exhaust sample as calculated from the integrated HC traces, in ppm carbon equivalent. For flow compensated sample systems $(HC_e)_i$ is the instantaneous concentration.

HC_d= Hydrocarbon concentration of the dilution air as measured, in ppm carbon equivalent.

(2) For oxides of nitrogen equations:

NO_{Xmass} = Oxides of nitrogen emissions, in grams per test mode.

$Density\ NO_2$= Density of oxides of nitrogen is 1.913 kg/m³, assuming they are in the form of nitrogen dioxide, at 20 °C and 101.3 kPa pressure.

NO_{Xconc}= Oxides of nitrogen concentration of the dilute exhaust sample corrected for background, in ppm:

$$NOx_{conc} = NOx_e - NOx_d\left(1 - \frac{1}{DF}\right)$$

Where:

NO_X.= Oxides of nitrogen concentration of the dilute exhaust bag sample as measured, in ppm. For flow compensated sample systems $(NO_X.)_i$ is the instantaneous concentration.

NO_X.= Oxides of nitrogen concentration of the dilute air as measured, in ppm.

(3) For carbon monoxide equations:

CO_{mass}=Carbon monoxide emissions, grams per test mode. $Density_{CO}$=Density of carbon monoxide (1.164 kg/m³ at 20 °C and 101.3 kPa pressure).

CO_{conc}=Carbon monoxide concentration of the dilute exhaust sample corrected for background, water vapor, and CO_2 extraction, ppm.

$$CO_{conc} = CO_e - CO_d\left(1 - \frac{1}{DF}\right)$$

Where:

CO_e=Carbon monoxide concentration of the dilute exhaust bag sample volume corrected for water vapor and carbon dioxide extraction, ppm. For flow compensated

sample systems, $(CO_e)_i$ is the instantaneous concentration.

The following calculation assumes the carbon to hydrogen ratio of the fuel is 1:1.85. As an option the measured actual carbon to hydrogen ratio may be used:

$CO_e = [1 - 0.01925CO_2. - 0.000323R]CO_{em}$

Where:

CO_{em}=Carbon monoxide concentration of the dilute exhaust sample as measured, ppm.

CO_2.=Carbon dioxide concentration of the dilute exhaust bag sample, in percent, if measured. For flow compensated sample systems, $(CO_2.)_i$ is the instantaneous concentration. For cases where exhaust sampling of CO_2 is not performed, the following approximation is permitted:

$$CO_{2_e} = \frac{44.010}{12.011 + 1.008\alpha} \frac{M^1\ 453.6}{Density_{CO_2}} \frac{100}{V_{mix}}$$

[a]=Average carbon to hydrogen ratio.

M^1 = Fuel mass consumed during the mode.

R=Relative humidity of the dilution air, percent.

CO_d=Carbon monoxide concentration of the dilution air corrected for water vapor extraction, ppm.

$CO_d = (1 - 0.000323R)CO_{dm}$

Where:

CO_{dm}=Carbon monoxide concentration of the dilution air sample as measured, ppm.

(Note: If a CO instrument that meets the criteria specified in 40 CFR part 1065, subpart C, is used without a sample dryer according to 40 CFR 1065.145, CO_{em} must be substituted directly for CO_e and CO_{dm} must be substituted directly for CO_d.)

(4) For carbon dioxide equation:

CO_{2mass}=Carbon dioxide emissions, in grams per test mode.

Density CO_2=Density of carbon dioxide is 1.830 kg/m^3, at 20 °C and 760 mm Hg pressure.

CO_{2conc}=Carbon dioxide concentration of the dilute exhaust sample corrected for background, in percent.

$$CO_{2_{mass}} = CO_{2_e} - CO_{2_d}\left(1 - \frac{1}{DF}\right)$$

Where:

CO_2.=Carbon dioxide concentration of the dilution air as measured, in percent.

$$(5)\ DF = \frac{13.4}{CO_{2_e} + \left(HC_e + CO_e \times 10^{-4}\right)},\ \text{or}\ DF = \frac{13.4}{CO_{2_e}}.$$

(6) Measured ''dry'' concentrations shall be corrected to a wet basis, if not already measured on a wet basis. This section is applicable only for measurements made on dilute exhaust gas. Correction to a wet basis shall be according to the following formula:

$Conc_{WET} = K_W \times Conc_{DRY}$

Where: K_W is determined according to the equation in paragraph (d)(6)(i) or (d)(6)(ii), of this section.

(i) For wet CO_2 measurement:

$$K_w = \left(1 - \frac{\alpha \times CO_2\%\,conc\,(wet)}{200}\right) - K_{w1}$$

(ii) For dry CO_2 measurement:

$$K_w = \left(\frac{(1 - K_{W1})}{1 + \frac{\alpha \times CO_2\%\,\mathrm{conc(dry)}}{200}} \right)$$

(iii) For the equations in paragraph (d)(6)(i) and (d)(6)(ii) of this section, the following equation applies:

$$K_{w1} = \frac{1.608 \times \left[H_d \times \left(1 - {}^{1}\!/_{DF}\right) + H_a \times \left({}^{1}\!/_{DF}\right) \right]}{1000 + \left\{ 1.608 \times \left[H_d \times \left(1 - {}^{1}\!/_{DF}\right) + H_a \times \left({}^{1}\!/_{DF}\right) \right] \right\}} +$$

Where: H_a and H_d are the grams of water per kilogram of dry air; as illustrated in the following equations:

$$H_d = \frac{6.22 \times R_d \times p_d}{p_B - \left(p_d \times R_d \times 10^{-2}\right)}$$

$$H_a = \frac{6.22 \times R_a \times p_a}{p_B - \left(p_a \times R_a \times 10^{-2}\right)}$$

(e) The final modal reported brake-specific fuel consumption (bsfc) shall be computed by use of the following formula:

$$\mathrm{bsfc} = \frac{M}{kW - hr}$$

Where:

bsfc = brake-specific fuel consumption for a mode in grams of fuel per kilowatt-hour (kW-hr).

M = mass of fuel in grams, used by the engine during a mode.

kW-hr = total kilowatts integrated with respect to time for a mode.

(f) The mass of fuel for the mode is determined from mass fuel flow measurements made during the mode, or from the following equation:

$$M = \left(\frac{G_S}{R_2} \right) \left(\frac{1}{273.15} \right)$$

Where:

M=Mass of fuel, in grams, used by the engine during the mode.

G_s=Grams of carbon measured during the mode:

$$G_S = \left[\frac{12.011}{12.011 + \alpha\,(1.008)}\right] HC_{mass} + 0.429 CO_{mass} + 0.273 CO_{2_{mass}}$$

R_2=Grams C in fuel per gram of fuel

Where:

HC_{mass}=hydrocarbon emissions, in grams for the mode

CO_{2mass}=carbon monoxide emissions, in grams for the mode

CO_{2mass}=carbon dioxide emissions, in grams for the mode

α=The atomic hydrogen to carbon ratio of the fuel.

[59 FR 31335, June 17, 1994. Redesignated and amended at 63 FR 56996, 57018, Oct. 23, 1998; 70 FR 40446, July 13, 2005]

§ 89.425 [Reserved]

APPENDIX A TO SUBPART E OF PART 89—FIGURES

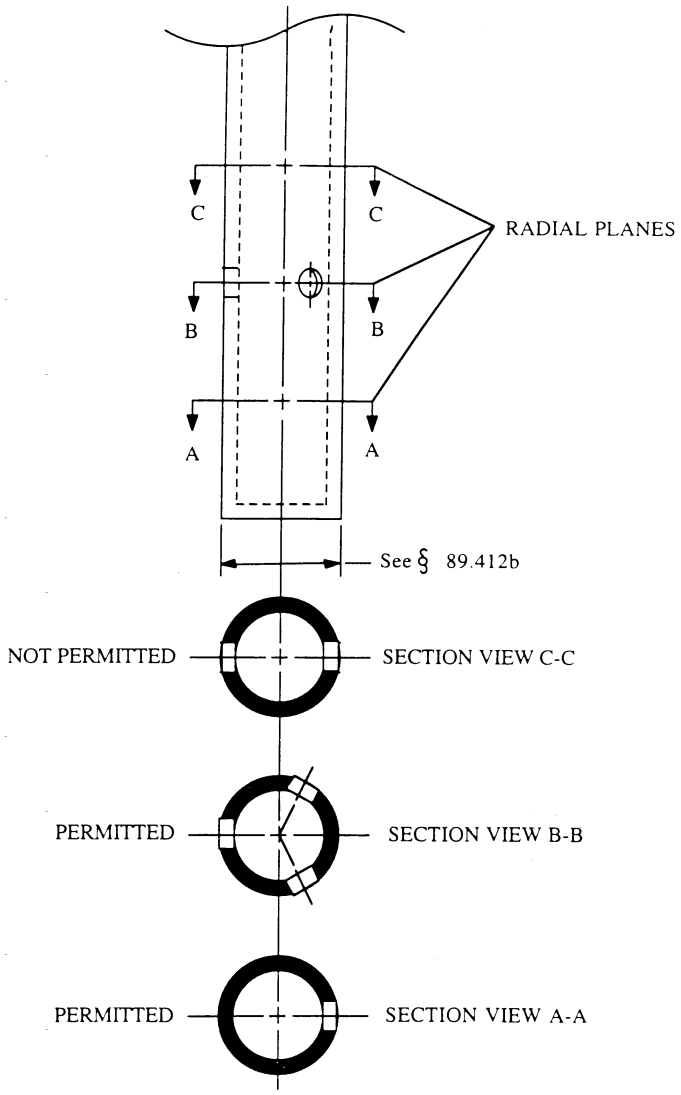

Figure 1.--SAMPLE PROBE AND TYPICAL HOLE SPACING

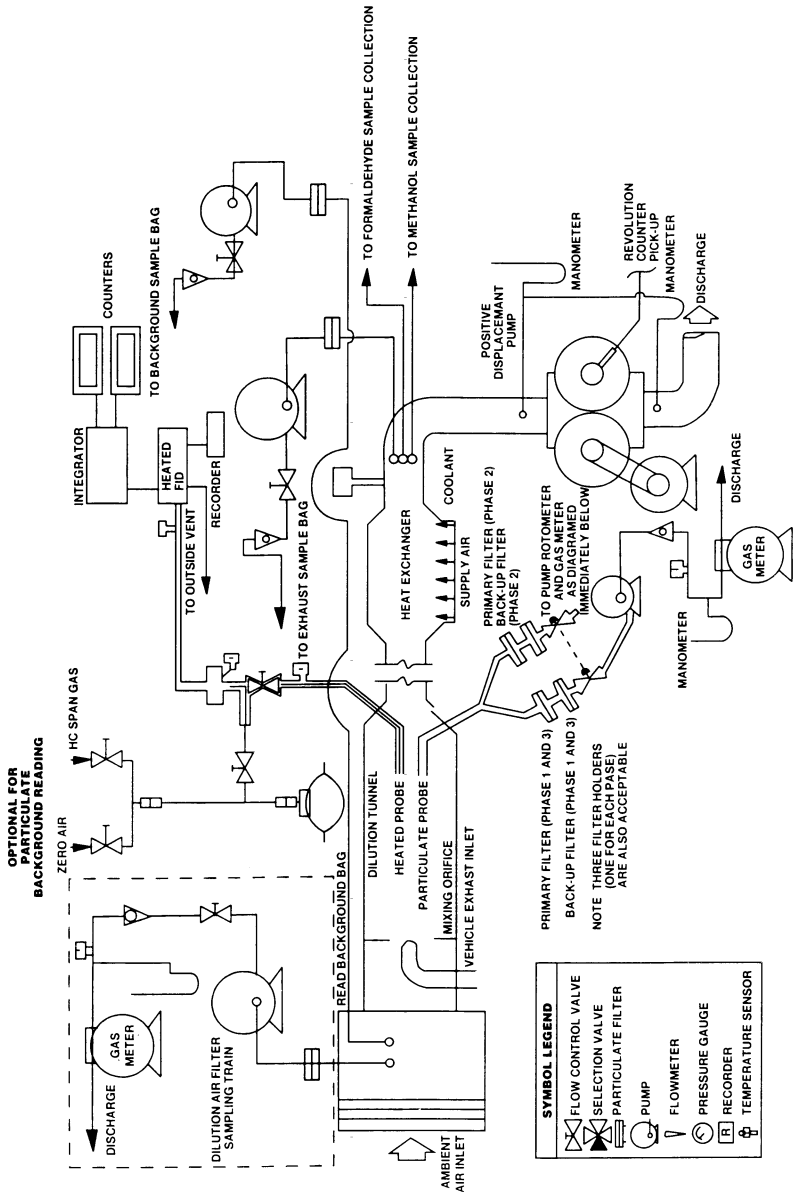

Figure 2 — Gaseous & Particulate Emissions Sampling System (PDP-CVS)

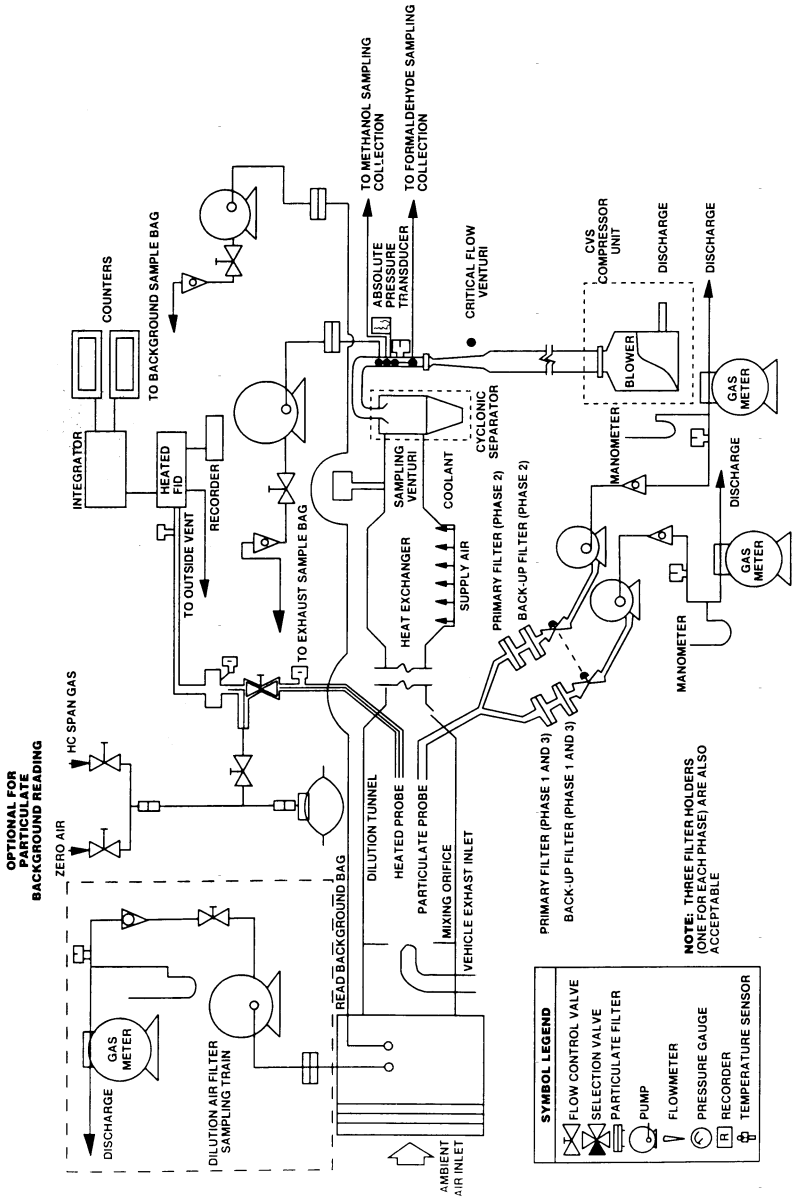

Figure 3. — Gaseous and Particulate Emissions Sampling System (CVF-CVS)

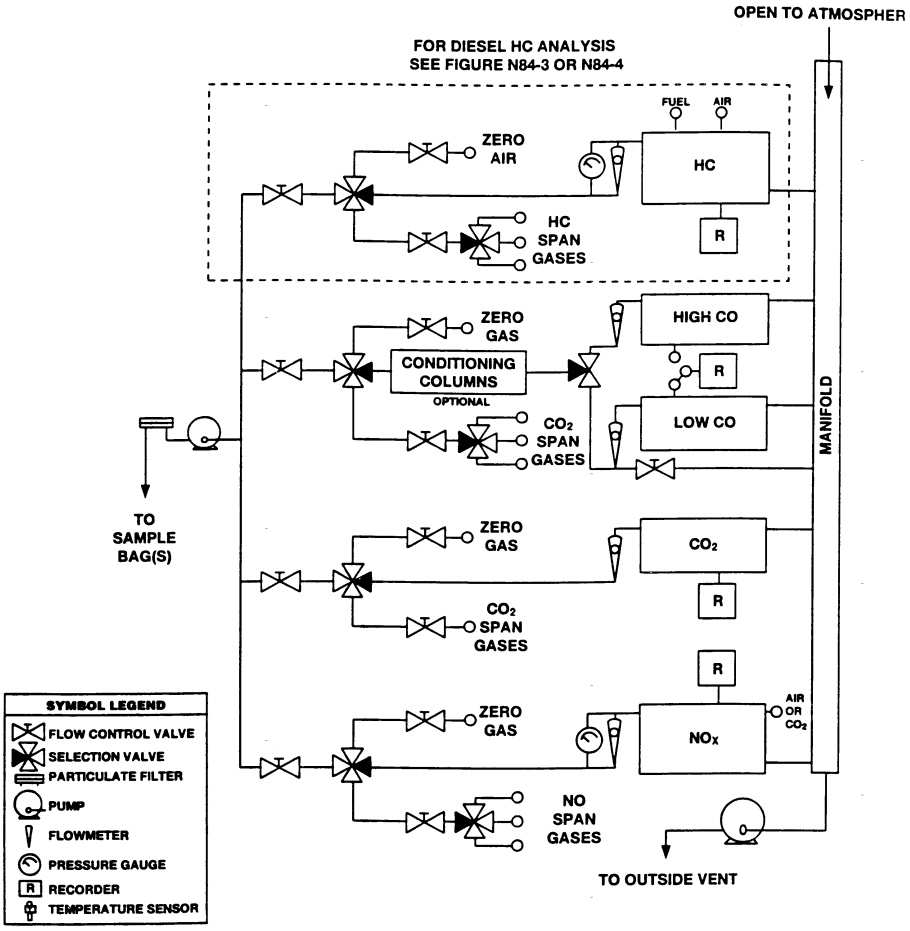

Figure 4. — Exhaust Gas Analytical System

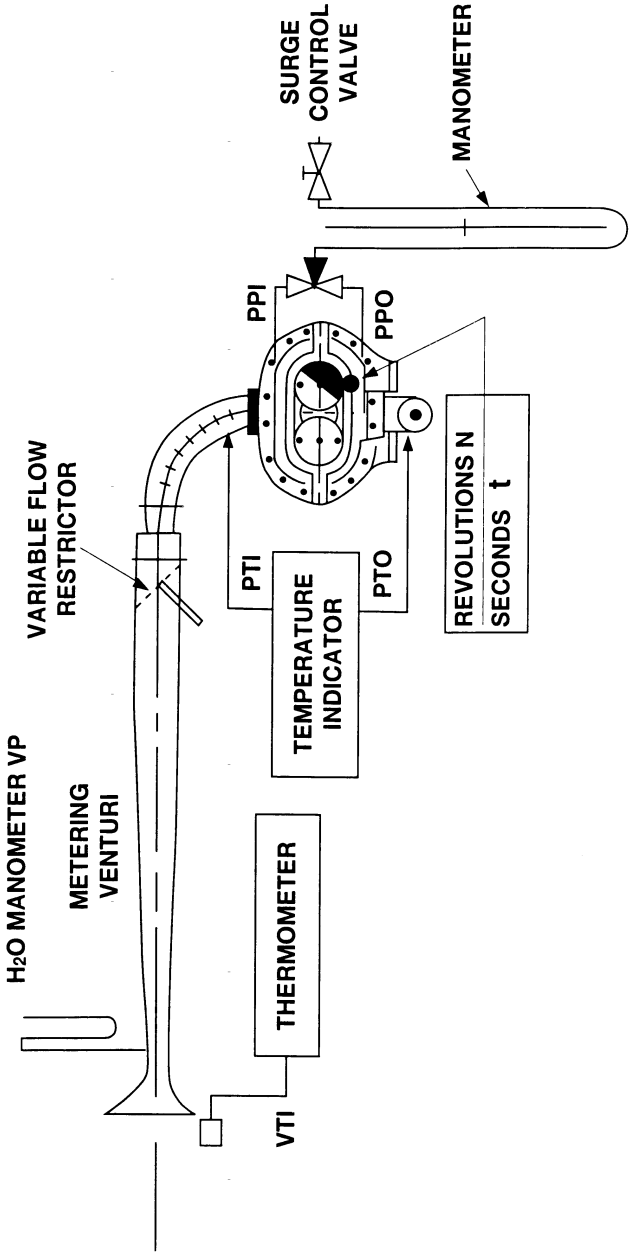

Figure 5. — PDP-CVS Calibration Configuration

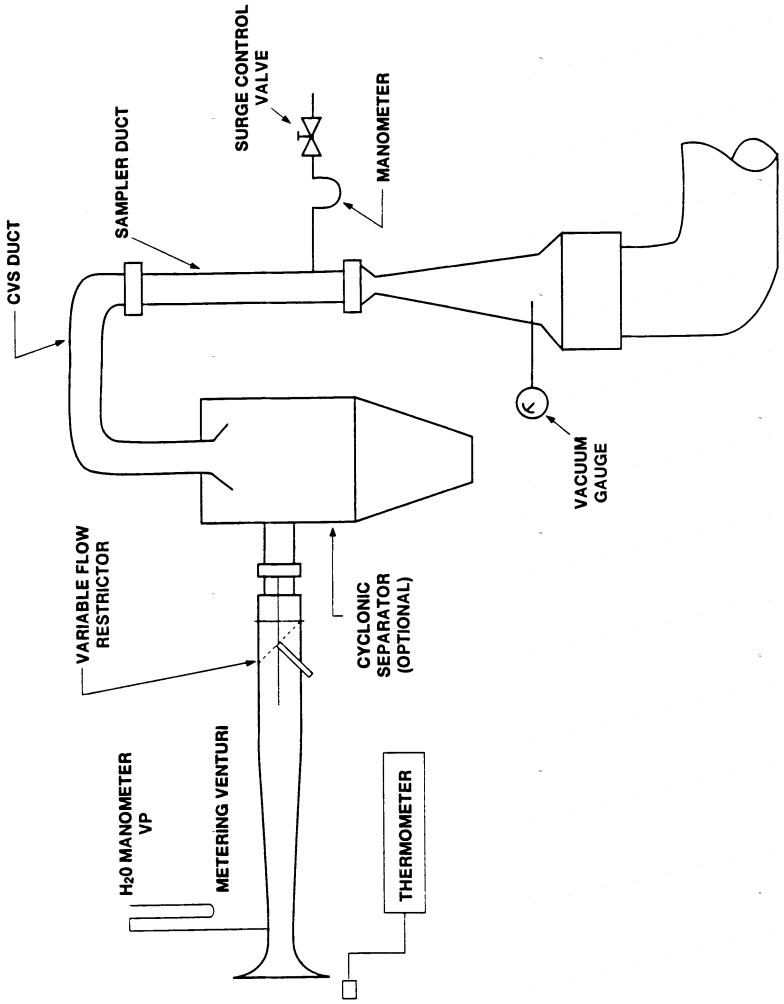

Figure 6. — CFV-CVS Calibration Configuration

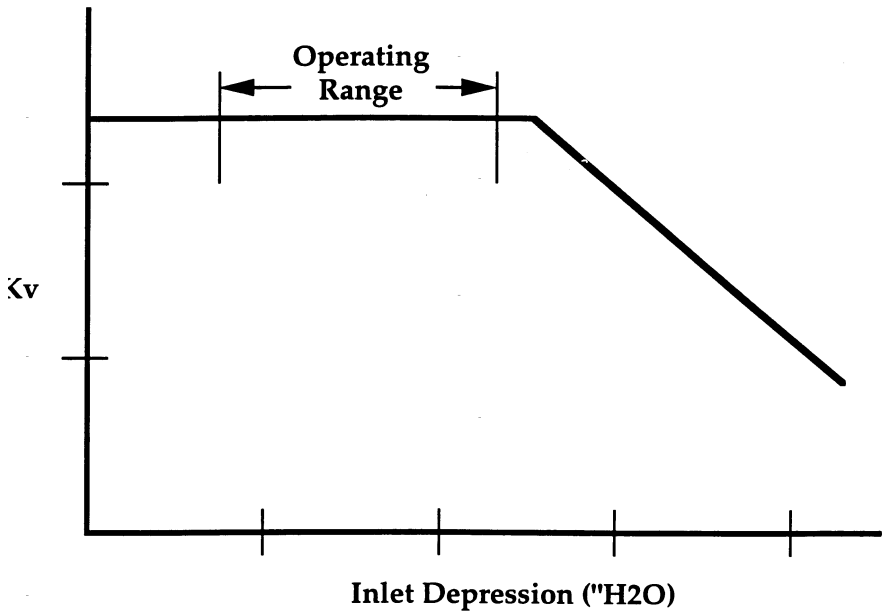

Figure 7.—Sonic Flow Choking

APPENDIX B TO SUBPART E OF PART 89—TABLES

TABLE 1—8-MODE TEST CYCLE FOR VARIABLE-SPEED ENGINES

Test segment	Mode number	Engine speed [1]	Observed torque [2] (percent of max. observed)	Minimum time in mode (minutes)	Weighting factors
1	1	Rated	100	5.0	0.15
1	2	Rated	75	5.0	0.15
1	3	Rated	50	5.0	0.15
1	4	Rated	10	5.0	0.10
2	5	Int	100	5.0	0.10
2	6	Int	75	5.0	0.10
2	7	Int	50	5.0	0.10
2	8	Idle	0	5.0	0.15

[1] Engine speed (non-idle): ±2 percent of point. Engine speed (idle): Within manufacturer's specifications. Idle speed is specified by the manufacturer.

[2] Torque (non-idle): Throttle fully open for 100 percent points. Other non-idle points: ±2 percent of engine maximum value. Torque (idle): Throttle fully closed. Load less than 5 percent of peak torque.

TABLE 2—5-MODE TEST CYCLE FOR CONSTANT-SPEED ENGINES

Mode number	Engine[1] Speed	Observed torque [2] (percent of max. observed)	Minimum time in mode (minutes)	Weighting factors
1	Rated	100	5.0	0.05
2	Rated	75	5.0	0.25
3	Rated	50	5.0	0.30

TABLE 2—5-MODE TEST CYCLE FOR CONSTANT-SPEED ENGINES—Continued

Mode number	Engine[1] Speed	Observed torque[2] (percent of max. observed)	Minimum time in mode (minutes)	Weighting factors
4	Rated	25	5.0	0.30
5	Rated	10	5.0	0.10

[1] Engine speed: ±2 percent of point.
[2] Torque: Throttle fully open for 100 percent point. Other points: ±2 percent of engine maximum value.

TABLE 3—6-MODE TEST CYCLE FOR ENGINES RATED UNDER 19 kW

Mode number	Engine speed[1]	Observed torque[2] (percent of max. observed)	Minimum time in mode (minutes)	Weighting factors
1	Rated	100	5.0	0.09
2	Rated	75	5.0	0.20
3	Rated	50	5.0	0.29
4	Rated	25	5.0	0.30
5	Rated	10	5.0	0.07
6	Idle	0	5.0	0.05

[1] Engine speed (non-idle): ±2 percent of point. Engine speed (idle): Within manufacturer's specifications. Idle speed is specified by the manufacturer.
[2] Torque (non-idle): Throttle fully open for operation at 100 percent point. Other nonidle points: ±2 percent of engine maximum value. Torque (idle): Throttle fully closed. Load less than 5 percent of peak torque.

TABLE 4—4-MODE TEST CYCLE FOR PROPULSION MARINE DIESEL ENGINES

Mode number	Engine speed[1] (percent of max. observed)	Observed power[2] (percent of max. observed)	Minimum time in mode (minutes)	Weighting factors
1	100	100	5.0	0.20
2	91	75	5.0	0.50
3	80	50	5.0	0.15
4	63	25	5.0	0.15

[1] Engine speed: ±2 percent of point.
[2] Power: Throttle fully open for operation at 100 percent point. Other points: ±2 percent of engine maximum value.

[63 FR 57019, Oct. 23, 1998]

Subpart F—Selective Enforcement Auditing

§ 89.501 Applicability.

The requirements of subpart F are applicable to all nonroad engines subject to the provisions of subpart A of part 89.

[59 FR 31335, June 17, 1994. Redesignated at 63 FR 56996, Oct. 23, 1998]

§ 89.502 Definitions.

The definitions in subpart A of this part apply to this subpart. The following definitions also apply to this subpart.

Acceptable quality level (AQL) means the maximum percentage of failing engines that can be considered a satisfactory process average for sampling inspections.

Configuration means any subclassification of an engine family which can be described on the basis of gross power, emission control system, governed speed, injector size, engine calibration, and other parameters as designated by the Administrator.

Inspection criteria means the pass and fail numbers associated with a particular sampling plan.

Test engine means an engine in a test sample.

Test sample means the collection of engines selected from the population of an engine family for emission testing.

[59 FR 31335, June 17, 1994. Redesignated at 63 FR 56996, Oct. 23, 1998]

§ 89.503 Test orders.

(a) A test order addressed to the manufacturer is required for any testing under this subpart.

(b) The test order is signed by the Assistant Administrator for Air and Radiation or his or her designee. The test order must be delivered in person by an EPA enforcement officer or EPA authorized representative to a company representative or sent by registered mail, return receipt requested, to the manufacturer's representative who signed the application for certification submitted by the manufacturer, pursuant to the requirements of the applicable section of subpart B of this part. Upon receipt of a test order, the manufacturer must comply with all of the provisions of this subpart and instructions in the test order.

(c) *Information included in test order.* (1) The test order will specify the engine family to be selected for testing, the manufacturer's engine assembly plant or associated storage facility or port facility (for imported engines) from which the engines must be selected, the time and location at which engines must be selected, and the procedure by which engines of the specified family must be selected. The test order may specify the configuration to be audited and/or the number of engines to be selected per day. Engine manufacturers are required to select a minimum of four engines per day unless an alternate selection procedure is approved pursuant to § 89.507(a), or unless total production of the specified configuration is less than four engines per day. If total production of the specified configuration is less than four engines per day, the manufacturer selects the actual number of engines produced per day.

(2) The test order may include alternate families to be selected for testing at the Administrator's discretion in the event that engines of the specified family are not available for testing because those engines are not being manufactured during the specified time or are not being stored at the specified assembly plant, associated storage facilities, or port of entry.

(3) If the specified family is not being manufactured at a rate of at least two engines per day in the case of manufacturers specified in § 89.508(g)(1), or one engine per day in the case of manufacturers specified in § 89.508(g)(2), over the expected duration of the audit, the Assistant Administrator or her or his designated representative may select engines of the alternate family for testing.

(4) In addition, the test order may include other directions or information essential to the administration of the required testing.

(d) A manufacturer may submit a list of engine families and the corresponding assembly plants, associated storage facilities, or (in the case of imported engines) port facilities from which the manufacturer prefers to have engines selected for testing in response to a test order. In order that a manufacturer's preferred location be considered for inclusion in a test order for a particular engine family, the list must be submitted prior to issuance of the test order. Notwithstanding the fact that a manufacturer has submitted the list, the Administrator may order selection at other than a preferred location.

(e) Upon receipt of a test order, a manufacturer must proceed in accordance with the provisions of this subpart.

(f)(1) During a given model year, the Administrator may not issue to a manufacturer more Selective Enforcement Auditing (SEA) test orders than an annual limit determined to be the larger of the following factors:

(i) Production factor, determined by dividing the projected nonroad engine sales in the United States for that model year, as declared by the manufacturer under § 89.505(c)(1), by 16,000 and rounding to the nearest whole number. If the projected sales are less than 8,000, this factor is one.

(ii) Family factor, determined by dividing the manufacturer's total number of certified engine families by five and rounding to the nearest whole number.

(2) If a manufacturer submits to EPA in writing prior to or during the model year a reliable sales projection update or adds engine families or deletes engine families from its production, that information is used for recalculating

the manufacturer's annual limit of SEA test orders.

(3) Any SEA test order for which the family fails under § 89.510 or for which testing is not completed is not counted against the annual limit.

(4) When the annual limit has been met, the Administrator may issue additional test orders to test those families for which evidence exists indicating noncompliance. An SEA test order issued on this basis will include a statement as to the reason for its issuance.

[59 FR 31335, June 17, 1994. Redesignated at 63 FR 56996, Oct. 23, 1998]

§ 89.504 Testing by the Administrator.

(a) The Administrator may require by test order under § 89.503 that engines of a specified family be selected in a manner consistent with the requirements of § 89.507 and submitted to the Administrator at the place designated for the purpose of conducting emission tests. These tests will be conducted in accordance with § 89.508 to determine whether engines manufactured by the manufacturer conform with the regulations with respect to which the certificate of conformity was issued.

(b) *Designating official data.* (1) Whenever the Administrator conducts a test on a test engine or the Administrator and manufacturer each conduct a test on the same test engine, the results of the Administrator's test comprise the official data for that engine.

(2) Whenever the manufacturer conducts all tests on a test engine, the manufacturer's test data is accepted as the official data, provided that if the Administrator makes a determination based on testing conducted under paragraph (a) of this section that there is a substantial lack of agreement between the manufacturer's test results and the Administrator's test results, no manufacturer's test data from the manufacturer's test facility will be accepted for purposes of this subpart.

(c) If testing conducted under § 89.503 is unacceptable under paragraph (b)(2) of this section, the Administrator must:

(1) Notify the manufacturer in writing of the Administrator's determination that the test facility is inappropriate for conducting the tests required by this subpart and the reasons therefor; and

(2) Reinstate any manufacturer's data upon a showing by the manufacturer that the data acquired under § 89.503 was erroneous and the manufacturer's data was correct.

(d) The manufacturer may request in writing that the Administrator reconsider the determination in paragraph (b)(2) of this section based on data or information which indicates that changes have been made to the test facility and these changes have resolved the reasons for disqualification.

[59 FR 31335, June 17, 1994. Redesignated at 63 FR 56996, Oct. 23, 1998]

§ 89.505 Maintenance of records; submittal of information.

(a) The manufacturer of any new nonroad engine subject to any of the provisions of this subpart must establish, maintain, and retain the following adequately organized and indexed records:

(1) *General records.* A description of all equipment used to test engines in accordance with § 89.508 pursuant to a test order issued under this subpart, specifically, the equipment requirements specified in §§ 86.884–8 and 86.884–9 of this chapter and the equipment requirements specified in §§ 89.306, 89.308, 89.309, and 89.312.

(2) *Individual records.* These records pertain to each audit conducted pursuant to this subpart and include:

(i) The date, time, and location of each test;

(ii) The number of hours of service accumulated on the engine when the test began and ended;

(iii) The names of all supervisory personnel involved in the conduct of the audit;

(iv) A record and description of any repairs performed prior to and/or subsequent to approval by the Administrator, giving the date, associated time, justification, name(s) of the authorizing personnel, and names of all supervisory personnel responsible for the conduct of the repair;

(v) The date the engine was shipped from the assembly plant, associated storage facility or port facility, and date the engine was received at the testing facility;

(vi) A complete record of all emission tests performed pursuant to this subpart (except tests performed directly by EPA), including all individual worksheets and/or other documentation relating to each test, or exact copies thereof, to be in accordance with the record requirements specified in § 89.404 or § 86.884–10 of this chapter.

(vii) A brief description of any significant audit events not described under paragraph (a)(2) of this section, commencing with the test engine selection process and including such extraordinary events as engine damage during shipment.

(3) The manufacturer must record test equipment description, pursuant to paragraph (a)(1) of this section, for each test cell that can be used to perform emission testing under this subpart.

(b) The manufacturer must retain all records required to be maintained under this subpart for a period of one year after completion of all testing in response to a test order. Records may be retained as hard copy or reduced to microfilm, floppy disc, and so forth, depending upon the manufacturer's record retention procedure; provided, that in every case, all the information contained in the hard copy is retained.

(c) The manufacturer must, upon request by the Administrator, submit the following information with regard to engine production:

(1) Projected production for each engine configuration within each engine family for which certification is requested;

(2) Number of engines, by configuration and assembly plant, scheduled for production for the time period designated in the request;

(3) Number of engines, by configuration and by assembly plant, storage facility or port facility, scheduled to be stored at facilities for the time period designated in the request; and

(4) Number of engines, by configuration and assembly plant, produced during the time period designated in the request that are complete for introduction into commerce.

(d) Nothing in this section limits the Administrator's discretion in requiring the manufacturer to retain additional records or submit information not specifically required by this section.

(e) All reports, submissions, notifications, and requests for approvals made under this subpart are addressed to: Director, Engine Programs and Compliance Division (6405–J), U.S. Environmental Protection Agency, 1200 Pennsylvania Ave., NW., Washington, DC 20460.

[59 FR 31335, June 17, 1994. Redesignated and amended at 63 FR 56996, 57020, Oct. 23, 1998]

§ 89.506 Right of entry and access.

(a) To allow the Administrator to determine whether a manufacturer is complying with the provisions of this subpart and a test order issued thereunder, EPA enforcement officers or EPA authorized representatives may enter during operating hours and upon presentation of credentials any of the following places:

(1) Any facility where any engine to be introduced into commerce, including ports of entry, or any emission-related component is manufactured, assembled, or stored;

(2) Any facility where any tests conducted pursuant to a test order or any procedures or activities connected with these tests are or were performed;

(3) Any facility where any engine which is being tested, was tested, or will be tested is present; and

(4) Any facility where any record or other document relating to any of the above is located.

(b) Upon admission to any facility referred to in paragraph (a) of this section, EPA enforcement officers or EPA authorized representatives are authorized to perform the following inspection-related activities:

(1) To inspect and monitor any aspects of engine manufacture, assembly, storage, testing and other procedures, and the facilities in which these procedures are conducted;

(2) To inspect and monitor any aspect of engine test procedures or activities, including, but not limited to, engine selection, preparation, service accumulation, emission test cycles, and maintenance and verification of test equipment calibration;

(3) To inspect and make copies of any records or documents related to the assembly, storage, selection, and testing

of an engine in compliance with a test order; and

(4) To inspect and photograph any part or aspect of any engine and any component used in the assembly thereof that is reasonably related to the purpose of the entry.

(c) EPA enforcement officers or EPA authorized representatives are authorized to obtain reasonable assistance without cost from those in charge of a facility to help the officers perform any function listed in this subpart and they are authorized to request the recipient of a test order to make arrangements with those in charge of a facility operated for the manufacturer's benefit to furnish reasonable assistance without cost to EPA whether or not the recipient controls the facility.

(1) Reasonable assistance includes, but is not limited to, clerical, copying, interpretation and translation services; the making available on an EPA enforcement officer's or EPA authorized representative's request of personnel of the facility being inspected during their working hours to inform the EPA enforcement officer or EPA authorized representative of how the facility operates and to answer the officer's or representative's questions; and the performance on request of emission tests on any engine which is being, has been, or will be used for SEA testing.

(2) A manufacturer may be compelled to cause the personal appearance of any employee at such a facility before an EPA enforcement officer or EPA authorized representative by written request for his appearance, signed by the Assistant Administrator for Air and Radiation, served on the manufacturer. Any such employee who has been instructed by the manufacturer to appear will be entitled to be accompanied, represented, and advised by counsel.

(d) EPA enforcement officers or EPA authorized representatives are authorized to seek a warrant or court order authorizing the EPA enforcement officers or EPA authorized representatives to conduct activities related to entry and access as authorized in this section, as appropriate, to execute the functions specified in this section. EPA enforcement officers or authorized representatives may proceed ex parte to obtain a warrant whether or not the EPA enforcement officers or EPA authorized representatives first attempted to seek permission of the recipient of the test order or the party in charge of the facilities in question to conduct activities related to entry and access as authorized in this section.

(e) A recipient of a test order must permit an EPA enforcement officer(s) or EPA authorized representative(s) who presents a warrant or court order to conduct activities related to entry and access as authorized in this section and as described in the warrant or court order. The recipient must also cause those in charge of its facility or a facility operated for its benefit to permit entry and access as authorized in this section pursuant to a warrant or court order whether or not the recipient controls the facility. In the absence of a warrant or court order, an EPA enforcement officer(s) or EPA authorized representative(s) may conduct activities related to entry and access as authorized in this section only upon the consent of the recipient of the test order or the party in charge of the facilities in question.

(f) It is not a violation of this part or the Clean Air Act for any person to refuse to permit an EPA enforcement officer(s) or EPA authorized representative(s) to conduct activities related to entry and access as authorized in this section if the officer(s) or representative(s) appears without a warrant or court order.

(g) A manufacturer is responsible for locating its foreign testing and manufacturing facilities in jurisdictions where local law does not prohibit an EPA enforcement officer(s) or EPA authorized representative(s) from conducting the entry and access activities specified in this section. EPA will not attempt to make any inspections which it has been informed that local foreign law prohibits.

[59 FR 31335, June 17, 1994. Redesignated and amended at 63 FR 56996, 57020, Oct. 23, 1998]

§ 89.507 Sample selection.

(a) Engines comprising a test sample will be selected at the location and in the manner specified in the test order. If a manufacturer determines that the test engines cannot be selected in the manner specified in the test order, an

alternative selection procedure may be employed, provided the manufacturer requests approval of the alternative procedure prior to the start of test sample selection, and the Administrator approves the procedure.

(b) The manufacturer must assemble the test engines of the family selected for testing using its normal mass production process for engines to be distributed into commerce. If, between the time the manufacturer is notified of a test order and the time the manufacturer finishes selecting test engines, the manufacturer implements any change(s) in its production processes, including quality control, which may reasonably be expected to affect the emissions of the engines selected, then the manufacturer must, during the audit, inform the Administrator of such changes. If the test engines are selected at a location where they do not have their operational and emission control systems installed, the test order will specify the manner and location for selection of components to complete assembly of the engines. The manufacturer must assemble these components onto the test engines using normal assembly and quality control procedures as documented by the manufacturer.

(c) No quality control, testing, or assembly procedures will be used on the test engine or any portion thereof, including parts and subassemblies, that have not been or will not be used during the production and assembly of all other engines of that family, unless the Administrator approves the modification in assembly procedures pursuant to paragraph (b) of this section.

(d) The test order may specify that an EPA enforcement officer(s) or authorized representative(s), rather than the manufacturer, select the test engines according to the method specified in the test order.

(e) The order in which test engines are selected determines the order in which test results are to be used in applying the sampling plan in accordance with § 89.510.

(f) The manufacturer must keep on hand all untested engines, if any, comprising the test sample until a pass or fail decision is reached in accordance with § 89.510(e). The manufacturer may ship any tested engine which has not failed the requirements as set forth in § 89.510(b). However, once the manufacturer ships any test engine, it relinquishes the prerogative to conduct retests as provided in § 89.508(i).

[59 FR 31335, June 17, 1994. Redesignated at 63 FR 56996, Oct. 23, 1998]

§ 89.508 Test procedures.

(a)(1) For nonroad engines subject to the provisions of this subpart, the prescribed test procedures are the nonroad engine 8-mode test procedure as described in subpart E of this part, the federal smoke test as described in part 86, subpart I of this chapter, and the particulate test procedure as adopted in the California Regulations for New 1996 and Later Heavy-Duty Off-Road Diesel Cycle Engines. This procedure is incorporated by reference. See § 89.6.

(2) The Administrator may, on the basis of a written application by a manufacturer, prescribe test procedures other than those specified in paragraph (a)(1) of this section for any nonroad engine he or she determines is not susceptible to satisfactory testing using the procedures specified in paragraph (a)(1) of this section.

(b)(1) The manufacturer may not adjust, repair, prepare, or modify the engines selected for testing and may not perform any emission tests on engines selected for testing pursuant to the test order unless this adjustment, repair, preparation, modification, and/or tests are documented in the manufacturer's engine assembly and inspection procedures and are actually performed or unless these adjustments and/or tests are required or permitted under this subpart or are approved in advance by the Administrator.

(2) The Administrator may adjust or cause to be adjusted any engine parameter which the Administrator has determined to be subject to adjustment for certification and Selective Enforcement Audit testing in accordance with § 89.108, to any setting within the physically adjustable range of that parameter, as determined by the Administrator in accordance with § 89.108, prior to the performance of any tests. However, if the idle speed parameter is one which the Administrator has determined to be subject to adjustment, the

Administrator may not adjust it to any setting which causes a lower engine idle speed than would have been possible within the physically adjustable range of the idle speed parameter if the manufacturer had accumulated 125 hours of service on the engine under paragraph (c) of this section, all other parameters being identically adjusted for the purpose of the comparison. The manufacturer may be requested to supply information needed to establish an alternate minimum idle speed. The Administrator, in making or specifying these adjustments, may consider the effect of the deviation from the manufacturer's recommended setting on emission performance characteristics as well as the likelihood that similar settings will occur on in-use engines. In determining likelihood, the Administrator may consider factors such as, but not limited to, the effect of the adjustment on engine performance characteristics and surveillance information from similar in-use engines.

(c) *Service Accumulation.* Prior to performing exhaust emission testing on an SEA test engine, the manufacturer may accumulate on each engine a number of hours of service equal to the greater of 125 hours or the number of hours the manufacturer accumulated during certification on the emission data engine corresponding to the family specified in the test order.

(1) Service accumulation must be performed in a manner using good engineering judgment to obtain emission results representative of normal production engines. This service accumulation must be consistent with the new engine break-in instructions contained in the applicable owner's manual.

(2) The manufacturer must accumulate service at a minimum rate of 16 hours per engine during each 24-hour period, unless otherwise approved by the Administrator.

(i) The first 24-hour period for service begins as soon as authorized checks, inspections, and preparations are completed on each engine.

(ii) The minimum service or mileage accumulation rate does not apply on weekends or holidays.

(iii) If the manufacturer's service or target is less than the minimum rate specified (16 hours per day), then the minimum daily accumulation rate is equal to the manufacturer's service target.

(3) Service accumulation must be completed on a sufficient number of test engines during consecutive 24-hour periods to assure that the number of engines tested per day fulfills the requirements of paragraphs (g)(1) and (g)(2) of this section.

(d) The manufacturer may not perform any maintenance on test engines after selection for testing, nor may the Administrator allow deletion of any engine from the test sequence, unless requested by the manufacturer and approved by the Administrator before any engine maintenance or deletion.

(e) The manufacturer must expeditiously ship test engines from the point of selection to the test facility. If the test facility is not located at or in close proximity to the point of selection, the manufacturer must assure that test engines arrive at the test facility within 24 hours of selection. The Administrator may approve more time for shipment based upon a request by the manufacturer accompanied by a satisfactory justification.

(f) If an engine cannot complete the service accumulation or an emission test because of a malfunction, the manufacturer may request that the Administrator authorize either the repair of that engine or its deletion from the test sequence.

(g) Whenever a manufacturer conducts testing pursuant to a test order issued under this subpart, the manufacturer must notify the Administrator within one working day of receipt of the test order as to which test facility will be used to comply with the test order. If no test cells are available at a desired facility, the manufacturer must provide alternate testing capability satisfactory to the Administrator.

(1) A manufacturer with projected nonroad engine sales for the United States market for the applicable year of 7,500 or greater must complete emission testing at a minimum rate of two engines per 24-hour period, including each voided test and each smoke test.

(2) A manufacturer with projected nonroad engine sales for the United States market for the applicable year

of less than 7,500 must complete emission testing at a minimum rate of one engine per 24-hour period, including each voided test and each smoke test.

(3) The Administrator may approve a lower daily rate of emission testing based upon a request by a manufacturer accompanied by a satisfactory justification.

(h) The manufacturer must perform test engine selection, shipping, preparation, service accumulation, and testing in such a manner as to assure that the audit is performed in an expeditious manner.

(i) *Retesting*. (1) The manufacturer may retest any engines tested during a Selective Enforcement Audit once a fail decision for the audit has been reached in accordance with § 89.510(e).

(2) The Administrator may approve retesting at other times based upon a request by the manufacturer accompanied by a satisfactory justification.

(3) The manufacturer may retest each engine a total of three times. The manufacturer must test each engine or vehicle the same number of times. The manufacturer may accumulate additional service before conducting a retest, subject to the provisions of paragraph (c) of this section.

(j) A manufacturer must test engines with the test procedure specified in subpart E of this part to demonstrate compliance with the exhaust emission standard (or applicable FEL) for oxides of nitrogen. If alternate procedures were used in certification pursuant to § 89.114, then those alternate procedures must be used.

[59 FR 31335, June 17, 1994. Redesignated at 63 FR 56996, Oct. 23, 1998]

§ 89.509 Calculation and reporting of test results.

(a) Initial test results are calculated following the applicable test procedure specified in § 89.508(a). The manufacturer rounds these results, in accordance with ASTM E29–93a, to the number of decimal places contained in the applicable emission standard expressed to one additional significant figure. This procedure has been incorporated by reference. See § 89.6.

(b) Final test results are calculated by summing the initial test results derived in paragraph (a) of this section for each test engine, dividing by the number of tests conducted on the engine, and rounding in accordance with the procedure specified in paragraph (a) of this section to the same number of decimal places contained in the applicable standard expressed to one additional significant figure.

(c) Within five working days after completion of testing of all engines pursuant to a test order, the manufacturer must submit to the Administrator a report which includes the following information:

(1) The location and description of the manufacturer's exhaust emission test facilities which were utilized to conduct testing reported pursuant to this section;

(2) The applicable standards and/or FEL against which the engines were tested;

(3) A description of the engine and its associated emission-related component selection method used;

(4) For each test conducted;

(i) Test engine description, including:

(A) Configuration and engine family identification;

(B) Year, make, and build date;

(C) Engine identification number; and

(D) Number of hours of service accumulated on engine prior to testing;

(ii) Location where service accumulation was conducted and description of accumulation procedure and schedule;

(iii) Test number, date, test procedure used, initial test results before and after rounding, and final test results for all exhaust emission tests, whether valid or invalid, and the reason for invalidation, if applicable;

(iv) A complete description of any modification, repair, preparation, maintenance, and/or testing which was performed on the test engine and has not been reported pursuant to any other paragraph of this subpart and will not be performed on all other production engines;

(v) Where an engine was deleted from the test sequence by authorization of the Administrator, the reason for the deletion;

(vi) Any other information the Administrator may request relevant to the determination as to whether the new engines being manufactured by the

manufacturer do in fact conform with the regulations with respect to which the certificate of conformity was issued; and

(5) The following statement and endorsement:

This report is submitted pursuant to sections 213 and 208 of the Clean Air Act. This Selective Enforcement Audit was conducted in complete conformance with all applicable regulations under 40 CFR part 89 *et seq.* and the conditions of the test order. No emission-related changes to production processes or quality control procedures for the engine family tested have been made between receipt of the test order and conclusion of the audit. All data and information reported herein is, to the best of (Company Name) knowledge, true and accurate. I am aware of the penalties associated with violations of the Clean Air Act and the regulations thereunder. (Authorized Company Representative.)

[59 FR 31335, June 17, 1994. Redesignated and amended at 63 FR 56996, 57020, Oct. 23, 1998]

§ 89.510 Compliance with acceptable quality level and passing and failing criteria for selective enforcement audits.

(a) The prescribed acceptable quality level is 40 percent.

(b) A failed engine is one whose final test results pursuant to § 89.509(b), for one or more of the applicable pollutants, exceed the applicable emission standard or family emission level.

(c) The manufacturer must test engines comprising the test sample until a pass decision is reached for all pollutants or a fail decision is reached for one pollutant. A pass decision is reached when the cumulative number of failed engines, as defined in paragraph (b) of this section, for each pollutant is less than or equal to the pass decision number, as defined in paragraph (d) of this section, appropriate to the cumulative number of engines tested. A fail decision is reached when the cumulative number of failed engines for one or more pollutants is greater than or equal to the fail decision number, as defined in paragraph (d) of this section, appropriate to the cumulative number of engines tested.

(d) The pass and fail decision numbers associated with the cumulative number of engines tested are determined by using the tables in appendix A to this subpart, ''Sampling Plans for Selective Enforcement Auditing of Nonroad Engines,'' appropriate to the projected sales as made by the manufacturer in its report to EPA under § 89.505(c)(1). In the tables in appendix A to this subpart, sampling plan ''stage'' refers to the cumulative number of engines tested. Once a pass or fail decision has been made for a particular pollutant, the number of engines with final test results exceeding the emission standard for that pollutant shall not be considered any further for the purposes of the audit.

(e) Passing or failing of an SEA occurs when the decision is made on the last engine required to make a decision under paragraph (c) of this section.

(f) The Administrator may terminate testing earlier than required in paragraph (c) of this section.

[59 FR 31335, June 17, 1994. Redesignated at 63 FR 56996, Oct. 23, 1998]

§ 89.511 Suspension and revocation of certificates of conformity.

(a) The certificate of conformity is suspended with respect to any engine failing pursuant to paragraph (b) of § 89.510 effective from the time that testing of that engine is completed.

(b) The Administrator may suspend the certificate of conformity for a family which does not pass an SEA, pursuant to paragraph § 89.510(c), based on the first test or all tests conducted on each engine. This suspension will not occur before ten days after failure of the audit, unless the manufacturer requests an earlier suspension.

(c) If the results of testing pursuant to these regulations indicate that engines of a particular family produced at one plant of a manufacturer do not conform to the regulations with respect to which the certificate of conformity was issued, the Administrator may suspend the certificate of conformity with respect to that family for engines manufactured by the manufacturer at all other plants.

(d) Notwithstanding the fact that engines described in the application may be covered by a certificate of conformity, the Administrator may suspend such certificate immediately in whole or in part if the Administrator finds any one of the following infractions to be substantial:

(1) The manufacturer refuses to comply with the provisions of a test order issued by the Administrator under § 89.503.

(2) The manufacturer refuses to comply with any of the requirements of this subpart.

(3) The manufacturer submits false or incomplete information in any report or information provided to the Administrator under this subpart.

(4) The manufacturer renders inaccurate any test data submitted under this subpart.

(5) An EPA enforcement officer(s) or EPA authorized representative(s) is denied the opportunity to conduct activities related to entry and access as authorized in this subpart and a warrant or court order is presented to the manufacturer or the party in charge of a facility in question.

(6) An EPA enforcement officer(s) or EPA authorized representative(s) is unable to conduct activities related to entry and access as authorized in § 89.506 because a manufacturer has located a facility in a foreign jurisdiction where local law prohibits those activities.

(e) The Administrator must notify the manufacturer in writing of any suspension or revocation of a certificate of conformity in whole or in part; a suspension or revocation is effective upon receipt of the notification or ten days, except that the certificate is immediately suspended with respect to any failed engines as provided for in paragraph (a) of this section.

(f) The Administrator may revoke a certificate of conformity for a family when the certificate has been suspended pursuant to paragraph (b) or (c) of this section if the proposed remedy for the nonconformity, as reported by the manufacturer to the Administrator, is one requiring a design change or changes to the engine and/or emission control system as described in the application for certification of the affected family.

(g) Once a certificate has been suspended for a failed engine, as provided for in paragraph (a) of this section, the manufacturer must take the following actions before the certificate is reinstated for that failed engine:

(1) Remedy the nonconformity.

(2) Demonstrate that the engine conforms to applicable standards or family emission levels by retesting the engine in accordance with these regulations.

(3) Submit a written report to the Administrator, after successful completion of testing on the failed engine, which contains a description of the remedy and test results for each engine in addition to other information that may be required by this part.

(h) Once a certificate for a failed family has been suspended pursuant to paragraph (b) or (c) of this section, the manufacturer must take the following actions before the Administrator will consider reinstating the certificate:

(1) Submit a written report to the Administrator which identifies the reason for the noncompliance of the engines, describes the proposed remedy, including a description of any proposed quality control and/or quality assurance measures to be taken by the manufacturer to prevent future occurrences of the problem, and states the date on which the remedies will be implemented.

(2) Demonstrate that the engine family for which the certificate of conformity has been suspended does in fact comply with these regulations by testing engines selected from normal production runs of that engine family, at the plant(s), port facility(ies) or associated storage facility(ies) specified by the Administrator, in accordance with the conditions specified in the initial test order. If the manufacturer elects to continue testing individual engines after suspension of a certificate, the certificate is reinstated for an engine actually determined to be in conformance with the applicable standards or family emission levels through testing in accordance with the applicable test procedures, provided that the Administrator has not revoked the certificate pursuant to paragraph (f) of this section.

(i) Once the certificate for a family has been revoked under paragraph (f) of this section and the manufacturer desires to continue introduction into commerce of a modified version of that family, the following actions must be taken before the Administrator may consider issuing a certificate for that modified family:

(1) If the Administrator determines that the proposed change(s) in engine design may have an effect on emission performance deterioration, the Administrator will notify the manufacturer, within five working days after receipt of the report in paragraph (g) of this section, whether subsequent testing under this subpart is sufficient to evaluate the proposed change or changes or whether additional testing is required; and

(2) After implementing the change or changes intended to remedy the nonconformity, the manufacturer must demonstrate that the modified engine family does in fact conform with these regulations by testing engines selected from normal production runs of that modified engine family in accordance with the conditions specified in the initial test order. If the subsequent audit results in passing of the audit, the Administrator will reissue the certificate or issue a new certificate, as the case may be, to include that family, provided that the manufacturer has satisfied the testing requirements of paragraph (i)(1) of this section. If the subsequent audit is failed, the revocation remains in effect. Any design change approvals under this subpart are limited to the family affected by the test order.

(j) At any time subsequent to an initial suspension of a certificate of conformity for a test engine pursuant to paragraph (a) of this section, but not later than 15 days (or such other period as may be allowed by the Administrator) after notification of the Administrator's decision to suspend or revoke a certificate of conformity in whole or in part pursuant to paragraph (b), (c), or (f) of this section, a manufacturer may request a hearing as to whether the tests have been properly conducted or any sampling methods have been properly applied.

(k) Any suspension of a certificate of conformity under paragraph (d) of this section:

(1) will be in writing and will include the offer of an opportunity for a hearing conducted in accordance with §§ 89.512, 89.513, and 89.514 and

(2) need not apply to engines no longer in the hands of the manufacturer.

(l) After the Administrator suspends or revokes a certificate of conformity pursuant to this section and prior to the commencement of a hearing under § 89.512, if the manufacturer demonstrates to the Administrator's satisfaction that the decision to suspend, revoke, or void the certificate was based on erroneous information, the Administrator will reinstate the certificate.

(m) To permit a manufacturer to avoid storing non-test engines when conducting an audit of a family subsequent to a failure of an SEA and while reauditing of the failed family, it may request that the Administrator conditionally reinstate the certificate for that family. The Administrator may reinstate the certificate subject to the condition that the manufacturer consents to recall all engines of that family produced from the time the certificate is conditionally reinstated if the family fails the subsequent audit at the level of the standard and to remedy any nonconformity at no expense to the owner.

[59 FR 31335, June 17, 1994. Redesignated at 63 FR 56996, Oct. 23, 1998]

§ 89.512 Request for public hearing.

(a) If the manufacturer disagrees with the Administrator's decision under § 89.511 (b), (c), (d), or (f) to suspend or revoke a certificate or disputes the basis for an automatic suspension pursuant to § 89.511 (a), the manufacturer may request a public hearing.

(b) The manufacturer's request must be filed with the Administrator not later than 15 days after the Administrator's notification of the decision to suspend or revoke, unless otherwise specified by the Administrator. The manufacturer must simultaneously serve two copies of this request upon the Director of the Engine Programs and Compliance Division and file two copies with the Hearing Clerk of the Agency. Failure of the manufacturer to request a hearing within the time provided constitutes a waiver of the right to a hearing. Subsequent to the expiration of the period for requesting a hearing as of right, the Administrator may, at her or his discretion and for good cause shown, grant the manufacturer a

hearing to contest the suspension or revocation.

(c) The manufacturer's request for a public hearing must include:

(1) A statement as to which engine configuration(s) within a family is to be the subject of the hearing;

(2) A concise statement of the issues to be raised by the manufacturer at the hearing, except that in the case of the hearing requested under § 89.511(j), the hearing is restricted to the following issues:

(i) Whether tests have been properly conducted, specifically, whether the tests were conducted in accordance with applicable regulations under this part and whether test equipment was properly calibrated and functioning;

(ii) Whether sampling plans have been properly applied, specifically, whether sampling procedures specified in appendix A of this subpart were followed and whether there exists a basis for distinguishing engines produced at plants other than the one from which engines were selected for testing which would invalidate the Administrator's decision under § 89.511(c);

(3) A statement specifying reasons why the manufacturer believes it will prevail on the merits of each of the issues raised; and

(4) A summary of the evidence which supports the manufacturer's position on each of the issues raised.

(d) A copy of all requests for public hearings will be kept on file in the Office of the Hearing Clerk and will be made available to the public during Agency business hours.

[59 FR 31335, June 17, 1994. Redesignated and amended at 63 FR 56996, 57020, Oct. 23, 1998]

§ 89.513 Administrative procedures for public hearing.

(a) The Presiding Officer is an Administrative Law Judge appointed pursuant to 5 U.S.C. 3105 (see also 5 CFR part 930 as amended).

(b) The Judicial Officer is an officer or employee of the Agency appointed as a Judicial Officer by the Administrator, pursuant to this section, who meets the qualifications and performs functions as follows:

(1) *Qualifications*. A Judicial Officer may be a permanent or temporary employee of the Agency who performs other duties for the Agency. The Judicial Officer may not be employed by the Office of Enforcement or have any connection with the preparation or presentation of evidence for a hearing held pursuant to this subpart. The Judicial Officer must be a graduate of an accredited law school and a member in good standing of a recognized Bar Association of any state or the District of Columbia.

(2) *Functions*. The Administrator may consult with the Judicial Officer or delegate all or part of the Administrator's authority to act in a given case under this section to a Judicial Officer, provided that this delegation does not preclude the Judicial Officer from referring any motion or case to the Administrator when the Judicial Officer determines such referral to be appropriate.

(c) For the purposes of this section, one or more Judicial Officers may be designated. As work requires, a Judicial Officer may be designated to act for the purposes of a particular case.

(d) *Summary decision*. (1) In the case of a hearing requested under § 89.511(j), when it clearly appears from the data and other information contained in the request for a hearing that no genuine and substantial question of fact or law exists with respect to the issues specified in § 89.512(c)(2), the Administrator may enter an order denying the request for a hearing and reaffirming the original decision to suspend or revoke a certificate of conformity.

(2) In the case of a hearing requested under § 89.512 to challenge a suspension of a certificate of conformity for the reasons specified in § 89.511(d), when it clearly appears from the data and other information contained in the request for the hearing that no genuine and substantial question of fact or law exists with respect to the issue of whether the refusal to comply with the provisions of a test order or any other requirement of § 89.503 was caused by conditions and circumstances outside the control of the manufacturer, the Administrator may enter an order denying the request for a hearing and suspending the certificate of conformity.

(3) Any order issued under paragraph (d)(1) or (d)(2) of this section has the

force and effect of a final decision of the Administrator, as issued pursuant to § 89.515.

(4) If the Administrator determines that a genuine and substantial question of fact or law does exist with respect to any of the issues referred to in paragraphs (d)(1) and (d)(2) of this section, the Administrator will grant the request for a hearing and publish a notice of public hearing in the FEDERAL REGISTER or by such other means as the Administrator finds appropriate to provide notice to the public.

(e) *Filing and service.* (1) An original and two copies of all documents or papers required or permitted to be filed pursuant to this section and § 89.512(c) must be filed with the Hearing Clerk of the Agency. Filing is considered timely if mailed, as determined by the postmark, to the Hearing Clerk within the time allowed by this section and § 89.512(b). If filing is to be accomplished by mailing, the documents must be sent to the address set forth in the notice of public hearing referred to in paragraph (d)(4) of this section.

(2) To the maximum extent possible, testimony will be presented in written form. Copies of written testimony will be served upon all parties as soon as practicable prior to the start of the hearing. A certificate of service will be provided on or accompany each document or paper filed with the Hearing Clerk. Documents to be served upon the Director of the Engine Programs and Compliance Division must be sent by registered mail to: Director, Engine Programs and Compliance Division (6405–J), U.S. Environmental Protection Agency, 1200 Pennsylvania Ave., NW., Washington, DC 20460. Service by registered mail is complete upon mailing.

(f) *Computation of time.* (1) In computing any period of time prescribed or allowed by this section, except as otherwise provided, the day of the act or event from which the designated period of time begins to run is not included. Saturdays, Sundays, and federal legal holidays are included in computing the period allowed for the filing of any document or paper, except that when the period expires on a Saturday, Sunday, or federal legal holiday, the period is extended to include the next following business day.

(2) A prescribed period of time within which a party is required or permitted to do an act is computed from the time of service, except that when service is accomplished by mail, three days will be added to the prescribed period.

(g) *Consolidation.* The Administrator or the Presiding Officer in his discretion may consolidate two or more proceedings to be held under this section for the purpose of resolving one or more issues whenever it appears that consolidation will expedite or simplify consideration of these issues. Consolidation does not affect the right of any party to raise issues that could have been raised if consolidation had not occurred.

(h) *Hearing date.* To the extent possible hearings under § 89.512 will be scheduled to commence within 14 days of receipt of the application in § 89.512.

[59 FR 31335, June 17, 1994. Redesignated and amended at 63 FR 56996, 57020, Oct. 23, 1998]

§ 89.514 Hearing procedures.

The procedures provided in § 86.1014–84 (i) to (s) apply for hearings requested pursuant to § 89.512, suspension, revocation, or voiding of a certificate of conformity.

[59 FR 31335, June 17, 1994. Redesignated at 63 FR 56996, Oct. 23, 1998]

§ 89.515 Appeal of hearing decision.

The procedures provided in § 86.1014–84 (t) to (aa) apply for appeals filed with respect to hearings held pursuant to § 89.514.

[59 FR 31335, June 17, 1994. Redesignated at 63 FR 56996, Oct. 23, 1998]

§ 89.516 Treatment of confidential information.

The provisions for treatment of confidential information as described in § 89.7 apply.

[59 FR 31335, June 17, 1994. Redesignated at 63 FR 56996, Oct. 23, 1998]

APPENDIX A TO SUBPART F OF PART 89—SAMPLING PLANS FOR SELECTIVE ENFORCEMENT AUDITING OF NONROAD ENGINES

TABLE 1—SAMPLING PLAN CODE LETTER

Annual engine family sales	Code letter
20–50	AA [1]
20–99	A
100–299	B
300–499	C
500 or greater	D

[1] A manufacturer may optionally use either the sampling plan for code letter "AA" or sampling plan for code letter "A" for Selective Enforcement Audits of engine families with annual sales between 20 and 50 engines. Additionally, the manufacturer may switch between these plans during the audit.

TABLE 2—SAMPLING PLAN FOR CODE LETTER "AA"

[Sample inspection criteria]

Stage	Pass No.	Fail No.
1	(1)	(2)
2	(1)	(2)
3	0	(2)
4	0	(2)
5	1	5
6	1	6
7	2	6
8	2	7
9	3	7
10	3	8
11	4	8
12	4	9
13	5	9
14	5	10
15	6	10
16	6	10
17	7	10
18	8	10
19	8	10
20	9	10

[1] Test sample passing not permitted at this stage.
[2] Test sample failure not permitted at this stage.

TABLE 3—SAMPLING PLAN FOR CODE LETTER "A"

[Sample inspection criteria]

Stage	Pass No.	Fail No.
1	(1)	(2)
2	(1)	(2)
3	(1)	(2)
4	0	(2)
5	0	(2)
6	1	6
7	1	7
8	2	7
9	2	8
10	3	8
11	3	8
12	4	9
13	5	10
14	5	10
15	6	11
16	6	11
17	7	12

TABLE 3—SAMPLING PLAN FOR CODE LETTER "A"—Continued

[Sample inspection criteria]

Stage	Pass No.	Fail No.
18	7	12
19	8	13
20	8	13
21	9	14
22	10	14
23	10	15
24	11	15
25	11	16
26	12	16
27	12	17
28	13	17
29	14	17
30	16	17

[1] Test sample passing not permitted at this stage.
[2] Test sample failure not permitted at this stage.

TABLE 4—SAMPLING PLAN FOR CODE LETTER "B"

[Sample Inspection Criteria]

Stage	Pass No.	Fail No.
1	(1)	(2)
2	(1)	(2)
3	(1)	(2)
4	(1)	(2)
5	0	(2)
6	1	6
7	1	7
8	2	7
9	2	8
10	3	8
11	3	9
12	4	9
13	4	10
14	5	10
15	5	11
16	6	12
17	6	12
18	7	13
19	8	13
20	8	14
21	9	14
22	9	15
23	10	15
24	10	16
25	11	16
26	11	17
27	12	17
28	12	18
29	13	18
30	13	19
31	14	19
32	14	20
33	15	20
34	16	21
35	16	21
36	17	22
37	17	22
38	18	22
39	18	22
40	21	22

[1] Test sample passing not permitted at this stage.
[2] Test sample failure not permitted at this stage.

TABLE 5—SAMPLING PLAN FOR CODE LETTER "C"

[Sample Inspection Criteria]

Stage	Pass No.	Fail No.
1	(1)	(2)
2	(1)	(2)
3	(1)	(2)
4	(1)	(2)
5	0	(2)
6	0	6
7	1	7
8	2	7
9	2	8
10	3	9
11	3	9
12	4	10
13	4	10
14	5	11
15	5	11
16	6	12
17	6	12
18	7	13
19	7	13
20	8	14
21	8	14
22	9	15
23	10	15
24	10	16
25	11	16
26	11	17
27	12	17
28	12	18
29	13	18
30	13	19
31	14	19
32	14	20
33	15	20
34	15	21
35	16	21
36	16	22
37	17	22
38	18	23
39	18	23
40	19	24
41	19	24
42	20	25
43	20	25
44	21	26
45	21	27
46	22	27
47	22	27
48	23	27
49	23	27
50	26	27

[1] Test sample passing not permitted at this stage.
[2] Test sample failure not permitted at this stage.

TABLE 6—SAMPLING PLAN FOR CODE LETTER "D"

[Sample Inspection Criteria]

Stage	Pass No.	Fail No.
1	(1)	(2)
2	(1)	(2)
3	(1)	(2)
4	(1)	(2)
5	0	(2)
6	0	6
7	1	7
8	2	8
9	2	8

TABLE 6—SAMPLING PLAN FOR CODE LETTER "D"—Continued

[Sample Inspection Criteria]

Stage	Pass No.	Fail No.
10	3	9
11	3	9
12	4	10
13	4	10
14	5	11
15	5	11
16	6	12
17	6	12
18	7	13
19	7	13
20	8	14
21	8	14
22	9	15
23	9	15
24	10	16
25	11	16
26	11	17
27	12	17
28	12	18
29	13	19
30	13	19
31	14	20
32	14	20
33	15	21
34	15	21
35	16	22
36	16	22
37	17	23
38	17	23
39	18	24
40	18	24
41	19	25
42	19	26
43	20	26
44	21	27
45	21	27
46	22	28
47	22	28
48	23	29
49	23	29
50	24	30
51	24	30
52	25	31
53	25	31
54	26	32
55	26	32
56	27	33
57	27	33
58	28	33
59	28	33
60	32	33

[1] Test sample passing not permitted at this stage.
[2] Test sample failure not permitted at this stage.

[59 FR 31335, June 17, 1994, as amended at 70 FR 40446, July 13, 2005]

Subpart G—Importation of Nonconforming Nonroad Engines

§ 89.601 Applicability.

(a) Except where otherwise indicated, this subpart is applicable to nonroad engines for which the Administrator has promulgated regulations under this part prescribing emission standards

and nonroad vehicles and equipment containing such nonroad engines that are offered for importation or imported into the United States, but which engines, at the time of conditional importation, are not covered by certificates of conformity issued under section 213 and section 206(a) of the Clean Air Act as amended (that is, which are nonconforming nonroad engines as defined in § 89.602), and this part. Compliance with regulations under this subpart does not relieve any person or entity from compliance with other applicable provisions of the Clean Air Act.

(b) Regulations prescribing further procedures for the importation of nonroad engines and nonroad vehicles and equipment into the customs territory of the United States, as defined in 19 U.S.C. 1202, are set forth in U.S. Bureau of Customs regulations.

(c) For the purposes of this subpart, the term ''nonroad engine'' includes all nonroad engines incorporated into nonroad equipment or nonroad vehicles at the time they are imported or offered for import into the United States.

(d) Importers must complete the appropriate EPA declaration form before importing an engine. These forms are available on the Internet at *http://www.epa.gov/OTAQ/imports/* or by phone at 734–214–4100. Importers must keep the forms for five years and make them available upon request.

[59 FR 31335, June 17, 1994. Redesignated at 63 FR 56996, Oct. 23, 1998, as amended at 72 FR 53129, Sept. 18, 2007]

§ 89.602 Definitions.

The definitions in subpart A of this part apply to this subpart. The following definitions also apply to this subpart.

Certificate of conformity. The document issued by the Administrator under section 213 and section 206(a) of the Act.

Currently valid certificate of conformity. A certificate of conformity for which the current date is within the effective period as specified on the certificate of conformity, and which has not been withdrawn, superseded, voided, suspended, revoked, or otherwise rendered invalid.

Fifteen working day hold period. The period of time between a request for final admission and the automatic granting of final admission (unless EPA intervenes) for a nonconforming nonroad engine conditionally imported pursuant to § 89.605 or § 89.609. Day one of the hold period is the first working day (see definition for ''working day'' in this section) after the Engine Programs and Compliance Division of EPA receives a complete and valid application for final admission.

Independent commercial importer (ICI). An importer who is not an original engine manufacturer (OEM) (see definition below), but is the entity in whose name a certificate of conformity for a class of nonroad engines has been issued.

Model year for imported engines. The manufacturer's annual production period (as determined by the Administrator) which includes January 1 of the calendar year; provided, that if the manufacturer has no annual production period, the term ''model year'' means the calendar year in which a nonroad engine is modified. An independent commercial importer (ICI) is deemed to have produced a nonroad engine when the ICI has modified (including labeling) the nonconforming nonroad engine to meet applicable emission requirements.

Nonconforming nonroad engine. A nonroad engine which is not covered by a certificate of conformity prior to final or conditional admission (or for which such coverage has not been adequately demonstrated to EPA) and which has not been finally admitted into the United States under the provisions of § 89.605 or § 89.609.

Original engine manufacturer (OEM). The entity which originally manufactured the nonroad engine.

Original production (OP) year. The calendar year in which the nonroad engine was originally produced by the OEM.

Original production (OP) years old. The age of a nonroad engine as determined by subtracting the original production year of the nonroad engine from the calendar year of importation.

Production changes. Those changes in nonroad engine configuration, equipment, or calibration which are made by an OEM or ICI in the course of nonroad engine production and required to be reported under § 89.123.

United States. United States includes the customs territory of the United States as defined in 19 U.S.C. 1202, and the Virgin Islands, Guam, American Samoa, and the Commonwealth of the Northern Mariana Islands.

Useful life. A period of time as specified in subpart B of this part which for a nonconforming nonroad engine begins at the time of resale (for a nonroad engine owned by the ICI at the time of importation) or release to the owner (for a nonroad engine not owned by the ICI at the time of importation) of the nonroad engine by the ICI after modification and/or testing pursuant to § 89.605 or § 89.609.

Working day. Any day on which federal government offices are open for normal business. Saturdays, Sundays, and official federal holidays are not working days.

[59 FR 31335, June 17, 1994. Redesignated and amended at 63 FR 56996, 57021, Oct. 23, 1998]

§ 89.603 General requirements for importation of nonconforming nonroad engines.

(a) A nonconforming nonroad engine offered for importation into the United States is to be imported only by an Independent Commercial Importer (ICI) who is a holder of a currently valid certificate of conformity unless an exemption or exclusion is granted by the Administrator under § 89.611 of this subpart. For a nonroad engine imported pursuant to § 89.605, the ICI must hold a currently valid certificate of conformity for that specific nonroad engine model.

(b) Any nonroad engine imported into the United States must have a legible unique engine identification number permanently affixed to or engraved on the engine.

(c) Final admission may not be granted unless:

(1) The nonroad engine is covered by a certificate of conformity issued under subpart B of this part in the name of the ICI and the ICI has complied with all requirements of § 89.605; or

(2) The nonroad engine is modified and emission tested in accordance with the provisions of § 89.609 and the ICI has complied with all other requirements of § 89.609; or

(3) The nonroad engine is exempted or excluded under § 89.611.

(d) The ICI must submit to the Engine Programs and Compliance Division of EPA a copy of all approved applications for certification used to obtain certificates of conformity for the purpose of importing nonconforming nonroad engines pursuant to § 89.605 or § 89.609. In addition, the ICI must submit to the Engine Programs and Compliance Division a copy of all approved production changes implemented pursuant to § 89.605 or subpart B of this part. Documentation submitted pursuant to this paragraph (d) must be provided to the Engine Programs and Compliance Division within 10 working days of approval of the certification application (or production change) by EPA.

(e)(1) The applicable emission standards for engines imported by an ICI under this subpart are the emission standards applicable to the Original Production (OP) year of the engine.

(2) Where engine manufacturers have choices in emission standards for one or more pollutants in a given model year, the standard that applies to the ICI is the least stringent standard for that pollutant applicable to the OP year for the appropriate power category.

(3) ICIs may not generate, use or trade emission credits or otherwise participate in any way in the averaging, banking and trading program.

(4) An ICI may import no more than a total of five engines under this part for any given model year, except as allowed by paragraph (e)(5) of this section. For ICIs owned by a parent company, the importation limit includes importation by the parent company and all its subsidiaries.

(5) An ICI may exceed the limit outlined in paragraph (e)(4) of this section, provided that any engines in excess of the limit meet the emission standards and other requirements outlined in the applicable provisions of Part 89 or 1039 of this chapter for the model year in which the engine is modified (instead

of the emission standards and other requirements applicable for the OP year of the vehicle/engine).

[59 FR 31335, June 17, 1994. Redesignated and amended at 63 FR 56996, 57021, Oct. 23, 1998; 70 FR 40446, July 13, 2005]

§ 89.604 Conditional admission.

(a) A nonroad engine offered for importation under § 89.605 or § 89.609 may be conditionally admitted into the United States. These engines are refused final admission, unless at the time of conditional admission the importer has submitted to the Administrator a written report that the subject nonroad engine has been permitted conditional admission pending EPA approval of its application for final admission under § 89.605 or § 89.609. This written report is to contain the following:

(1) Identification of the importer of the nonroad engine and the importer's address, telephone number, and taxpayer identification number;

(2) Identification of the nonroad engine owner, the owner's address, telephone number, and taxpayer identification number;

(3) Identification of the nonroad engine including make, model, identification number, and original production year;

(4) Information indicating under what provision of these regulations the nonroad engine is to be imported;

(5) Identification of the place where the subject nonroad engine is to be stored until EPA approval of the importer's application to the Administrator for final admission;

(6) Authorization for EPA enforcement officers to conduct inspections or testing otherwise permitted by the Act or regulations thereunder;

(7) Identification of the Independent Commercial Importer's (ICI) certificate of conformity that permits the ICI to import that nonroad engine (for importation under § 89.605 or § 89.609); and

(8) Such other information as is deemed necessary by the Administrator.

(b) EPA will not require a U.S. Customs Service bond for a nonconforming nonroad engine which is imported under § 89.605 or § 89.609. The period of conditional admission may not exceed 120 days. Nonroad engines imported under § 89.605 or § 89.609 may not be operated during the period of conditional admission except for that operation necessary to comply with the requirements of this subpart. During the period of conditional admission applicable to § 89.605 or § 89.609, the importer must store the nonroad engine at a location where the Administrator has reasonable access to the nonroad engine for inspection.

(c) During the period of conditional admission under § 89.605 or § 89.609, an ICI may transfer responsibility of a nonroad engine to another qualified ICI for the purposes of complying with this subpart.

(1) The transferee ICI must be a holder of a currently valid certificate of conformity for the specific nonroad engine being transferred or be authorized to import the nonroad engine pursuant to § 89.609 as of the transfer date. The transferee ICI must comply with all the requirements of § 89.603, § 89.604, and either § 89.605 or § 89.609, as applicable.

(2) For the purpose of this subpart, the transferee ICI has ''imported'' the nonroad engine as of the transfer date as designated in a written record that is signed by both ICIs.

(3) The ICI that originally imported the nonroad engine is responsible for all requirements of this subpart from the actual date of importation until the date of transfer as designated in the written record. The transferee ICI is responsible for all requirements of this subpart beginning on the date of transfer.

(4) A copy of the written record is to be submitted to the Engine Programs and Compliance Division of EPA within five working days of the transfer date.

(d) Notwithstanding any other requirement of this subpart or U.S. Customs Service regulations, an ICI may also assume responsibility for the modification and testing of a nonconforming nonroad engine which was previously imported by another party. The ICI must be a holder of a currently valid certificate of conformity for that specific nonroad engine or authorized to import it pursuant to § 89.609 at the time of assuming such responsibility.

The ICI must comply with all the requirements of § 89.603, § 89.604, and either § 89.605 or § 89.609, as applicable. For the purposes of this subpart, the ICI has ''imported'' the nonroad engine as of the date the ICI assumes responsibility for the modification and testing of the nonroad engine. The ICI must submit written notification to the Engine Programs and Compliance Division of EPA within 10 working days of the assumption of that responsibility.

[59 FR 31335, June 17, 1994. Redesignated and amended at 63 FR 56996, 57021, Oct. 23, 1998]

§ 89.605 Final admission of certified nonroad engines.

(a) A nonroad engine may be finally admitted into the United States upon approval of the ICI's application to the Administrator. The application is made by completing EPA forms in accordance with EPA instructions. The application contains:

(1) The information required in § 89.604(a);

(2) Information demonstrating that the nonroad engine has been modified in accordance with a valid certificate of conformity. Demonstration is made in one of the following ways:

(i) The ICI attests that the nonroad engine has been modified in accordance with the provisions of the ICI's certificate of conformity; presents to EPA a statement written by the applicable Original Engine Manufacturer that the Original Engine Manufacturer must provide to the ICI, and to EPA, information concerning production changes to the class of nonroad engines described in the ICI's application for certification; delivers to the Engine Programs and Compliance Division of EPA notification by the ICI of any production changes already implemented by the Original Engine Manufacturer at the time of application and their effect on emissions; and obtains from EPA written approval to use this demonstration option; or

(ii) The ICI attests that the nonroad engine has been modified in accordance with the provisions of the ICI's certificate of conformity. The ICI also attests that it has conducted, within 120 days of entry, an applicable and valid emission test on every third nonroad engine imported under that certificate of conformity to demonstrate compliance with Federal emission requirements. The test is to be conducted at a laboratory located within the United States. Sequencing of the tests is determined by the date of importation of each nonroad engine beginning with the prototype nonroad engine used to obtain the applicable certificate of conformity. Should the ICI exceed a threshold of 300 nonroad engines imported under the certificate of conformity without adjustments or other changes in accordance with paragraph (a)(3) of this section, the amount of required testing is reduced to every fifth nonroad engine.

(3) The results of every emission test which the ICI conducted on the nonroad engine pursuant to paragraph (a)(2)(ii) of this section. Should a subject nonroad engine fail an emission test at any time, the following procedures are applicable:

(i) The ICI may either:

(A) Conduct one retest that involves no adjustment of the nonroad engine from the previous test (for example, adjusting the RPM, timing, air-to-fuel ratio, and so forth) other than adjustments to adjustable parameters that, upon inspection, were found to be out of tolerance. When such an allowable adjustment is made, the parameter may be reset only to the specified (that is, nominal) value (and not any other value within the tolerance band); or

(B) Initiate a change in production (production change) under the provisions of subpart B of this part that causes the nonroad engine to meet federal emission requirements.

(ii) If the ICI chooses to retest in accordance with paragraph (a)(3)(i)(A) of this section:

(A) The retests are to be completed no later than five working days subsequent to the first emission test;

(B) Should the subject nonroad engine fail the second emission test, then the ICI must initiate a change in production (a production change) under the provisions of subpart B of this part that causes the nonroad engine to meet federal emission requirements.

(iii) If the ICI chooses to initiate a change in production (a production change) under the provisions of subpart B of this part that causes the nonroad

engine to meet federal requirements, a change involving adjustments of adjustable nonroad engine parameters (for example, adjusting the RPM, timing, air/fuel ratio) represents a change in the specified (that is, nominal) value to be deemed acceptable by EPA.

(iv) A production change made in accordance with this section is to be implemented on all subsequent nonroad engines imported under the certificate of conformity after the date of importation of the nonroad engine which gave rise to the production change.

(v) Commencing with the first nonroad engine receiving the production change, every third nonroad engine imported under the certificate of conformity is to be emission tested to demonstrate compliance with federal emission requirements until, as in paragraph (a)(2)(ii) of this section, a threshold of 300 nonroad engines imported under the certificate of conformity is exceeded without adjustments or other changes in accordance with paragraph (a)(3)(i)(A) of this section, at which time the amount of required emission testing is reduced to every fifth nonroad engine.

(vi) A report concerning these production changes is to be made to the Engine Programs and Compliance Division of EPA within ten working days of initiation of the production change. The cause of any failure of an emission test is to be identified, if known;

(4) The applicable deterioration factor, if any;

(5) The emission test results adjusted by the deterioration factor;

(6) Other information that may be specified by applicable regulations or on the certificate of conformity under which the nonroad engine has been modified in order to assure compliance with requirements of the Act;

(7) All information required under § 89.610 related to maintenance, warranties, and labeling;

(8) An attestation by the ICI that the ICI is responsible for the nonroad engine's compliance with federal emission requirements, regardless of whether the ICI owns the nonroad engine imported under this section;

(9) The name, address, and telephone number of the person who the ICI prefers to receive EPA notification under § 89.605(c);

(10) An attestation by the ICI that all requirements of § 89.607 and § 89.610 have been met; and

(11) Other information as is deemed necessary by the Administrator.

(b) EPA approval for final admission of a nonroad engine under this section is to be presumed not to have been granted if a requirement of this subpart has not been met. This includes, but is not limited to, properly modifying the nonroad engine to be in conformity in all material respects with the description in the application for certification or not complying with the provisions of § 89.605(a)(2) or if the final emission test results, adjusted by the deterioration factor, if applicable, do not comply with applicable emission standards.

(c) Except as provided in paragraph (b) of this section, EPA approval for final admission of a nonroad engine under this section is presumed to have been granted if the ICI does not receive oral or written notice from EPA to the contrary within 15 working days of the date that the Engine Programs and Compliance Division of EPA receives the ICI's application under paragraph (a) of this section. EPA notice of nonapproval may be made to any employee of the ICI. It is the responsibility of the ICI to ensure that the Engine Programs and Compliance Division of EPA receives the application and to confirm the date of receipt. During this 15 working day hold period, the nonroad engine is to be stored at a location where the Administrator has reasonable access to the nonroad engine for the Administrator's inspection. The storage is to be within 50 miles of the ICI's testing facility to allow the Administrator reasonable access for inspection and testing. A storage facility not meeting this criterion must be approved in writing by the Administrator prior to the submittal of the ICI's application under paragraph (a) of this section.

[59 FR 31335, June 17, 1994. Redesignated and amended at 63 FR 56996, 57021, Oct. 23, 1998]

§ 89.606 Inspection and testing of imported nonroad engines.

(a) In order to allow the Administrator to determine whether an ICI's production nonroad engines comply with applicable emission requirements or requirements of this subpart, an EPA enforcement officer or authorized representative is authorized to conduct inspections and/or tests of nonroad engines imported by the ICI. The ICI must admit an EPA enforcement officer or authorized representative during operating hours to any of the following places upon demand and upon presentation of credentials:

(1) Any facility where any nonroad engine imported by the ICI under this subpart was or is being modified, tested, or stored and

(2) Any facility where any record or other document relating to modification, testing, or storage of the nonroad engine, or required to be kept by § 89.607, is located. EPA may require inspection or testing of nonroad engines at the test facility used by the ICI or at an EPA-designated testing facility, with transportation and/or testing costs to be borne by the ICI.

(b) Upon admission to any facility referred to in paragraph (a) of this section, an EPA enforcement officer or authorized representative is allowed during operating hours:

(1) To inspect and monitor any part or aspect of activities relating to the ICI's modification, testing, and/or storage of nonroad engines imported under this subpart;

(2) To inspect and make copies of record(s) or document(s) related to modification, testing, and storage of a nonroad engine, or required by § 89.607; and

(3) To inspect and photograph any part or aspect of the nonroad engine and any component used in the assembly thereof.

(c) An EPA enforcement officer or authorized representative is to be furnished, by those in charge of a facility being inspected, with such reasonable assistance as the officer or representative may request to help discharge any function listed in this subpart. An ICI must make arrangements with those in charge of a facility operated for its benefit to furnish such reasonable assistance without charge to EPA. Reasonable assistance includes, but is not limited to, clerical, copying, interpretation and translation services, and the making available on request of personnel of the facility being inspected during their working hours to inform the EPA enforcement officer or authorized representative of how the facility operates and to answer any questions.

(d) The requirements of paragraphs (a), (b), and (c) of this section apply whether or not the ICI owns or controls the facility in question. It is the ICI's responsibility to make such arrangements as may be necessary to assure compliance with paragraphs (a), (b), and (c) of this section. Failure to do so, or other failure to comply with paragraphs (a), (b), or (c), may result in sanctions as provided for in the Act or § 89.612(e).

(e) Duly designated enforcement officers are authorized to proceed ex parte to seek warrants authorizing the inspection or testing of the nonroad engines described in paragraph (a) of this section whether or not the enforcement officers first attempted to seek permission from the ICI or facility owner to inspect such nonroad engines.

(f) The results of the Administrator's test under this section comprise the official test data for the nonroad engine for purposes of determining whether the nonroad engine should be permitted final entry under § 89.605 or § 89.609.

[59 FR 31335, June 17, 1994. Redesignated at 63 FR 56996, Oct. 23, 1998]

§ 89.607 Maintenance of independent commercial importer's records.

(a) The Independent Commercial Importer (ICI) subject to any of the provisions of this subpart must establish and maintain adequately organized and indexed records, correspondence and other applicable documents relating to the certification, modification, test, purchase, sale, storage, registration, and importation of that nonroad engine. The ICI must retain such records for 8 years from the date of final admission or exportation of a nonconforming nonroad engine imported by the ICI. These records include, but are not limited to:

(1) The declaration required by U.S. Bureau of Customs regulations.

(2) Any documents or other written information required by a federal government agency to be submitted or retained in conjunction with the certification, importation or emission testing (if applicable) of nonroad engines;

(3) All bills of sale, invoices, purchase agreements, purchase orders, principal or agent agreements, and correspondence between the ICI and the ultimate purchaser of each nonroad engine and between any agents of the above parties;

(4) For nonroad engines imported by an ICI pursuant to § 89.605 or § 89.609, documents providing parts identification data (including calibration changes and part numbers and location of such parts on each nonroad engine) associated with the emission control system installed on each nonroad engine demonstrating that such emission control system was properly installed on such nonroad engine;

(5) For nonroad engines imported by an ICI pursuant to § 89.605 or § 89.609, documents demonstrating that, where applicable, each nonroad engine was emission tested in accordance with subpart E of this part and part 86, subpart I of this chapter;

(6) Documents providing evidence that the requirements of § 89.610 have been met;

(7) Documents providing evidence of compliance with all relevant requirements of the Clean Air Act;

(8) Documents providing evidence of the initiation of the 15 working day hold period (that is, evidence that the application submitted pursuant to § 89.605(a) or § 89.609(b) was received by EPA) for each nonroad engine imported pursuant to § 89.605 or § 89.609;

(9) For nonroad engines owned by the ICI at the time of importation, documents providing evidence of the date of sale and date of delivery to the ultimate purchaser, together with the name, address, and telephone number of the ultimate purchaser for each nonroad engine imported pursuant to § 89.605 or § 89.609;

(10) For nonroad engines not owned by the ICI at the time of importation, documents providing evidence and date of release to the owner (including owner's name, address, and telephone number) for each nonroad engine imported pursuant to § 89.605 or § 89.609;

(11) Documents providing evidence of the date of original manufacture of the nonroad engine. The importer may substitute an alternate date in lieu of the date of original manufacture, provided that the substitution of such alternate date is approved in advance by the Administrator.

(b) The ICI is responsible for ensuring the maintenance of records required by this section, regardless of whether or not facilities used by the ICI to comply with requirements of this subpart are under the control of the ICI.

[59 FR 31335, June 17, 1994. Redesignated at 63 FR 56996, Oct. 23, 1998]

§ 89.608 "In Use" inspections and recall requirements.

(a) Nonroad engines which have been imported by an Independent Commercial Importer (ICI) pursuant to § 89.605 or § 89.609 and finally admitted by EPA may be inspected and emission tested by EPA for the recall period specified in § 89.104(b).

(b) ICIs must maintain for eight years, and provide to EPA upon request, a list of owners or ultimate purchasers of all nonroad engines imported by the ICI under this subpart.

(c) The Administrator must notify the ICI whenever the Administrator has determined that a substantial number of a class or category of the ICI's nonroad engines, although properly maintained and used, do not conform to the regulations prescribed under section 213 of the Act when in actual use throughout their useful lives. After such notification, the recall regulations at subpart H of this part govern the ICI's responsibilities. References to a manufacturer in the recall regulations apply to the ICI.

[59 FR 31335, June 17, 1994. Redesignated at 63 FR 56996, Oct. 23, 1998]

§ 89.609 Final admission of modification nonroad engines and test nonroad engines.

(a) A nonroad engine may be imported under this section by an Independent Commercial Importer (ICI) possessing a currently valid certificate of conformity only if:

(1) The nonroad engine is six original production years old or older; and

(2) The ICI's name has not been placed on a currently effective EPA list of ICIs ineligible to import such modification/test nonroad engines, as described in paragraph (e) of this section; and

(3) The ICI has a currently valid certificate of conformity for the same nonroad engine class and fuel type as the nonroad engine being imported.

(b) A nonroad engine conditionally imported under this section may be finally admitted into the United States upon approval of the ICI's application by the Administrator. The application is to be made by completing EPA forms, in accordance with EPA instructions. The ICI includes in the application:

(1) The identification information required in § 89.604;

(2) An attestation by the ICI that the nonroad engine has been modified and tested in accordance with the applicable emission tests as specified in Subpart B § 89.119(a) of this part at a laboratory within the United States;

(3) The results of all emission tests;

(4) The applicable deterioration factor assigned by EPA, if any;

(5) The emission test results adjusted by the applicable deterioration factor;

(6) All information required under § 89.610 related to maintenance, warranties, and labeling;

(7) An attestation by the ICI that the ICI is responsible for the nonroad engine's compliance with federal emission requirements, regardless of whether the ICI owns the nonroad engine imported under this section;

(8) The applicable address and telephone number of the ICI, or the name, address, and telephone number of the person who the ICI prefers to receive EPA notification under § 89.609(d);

(9) An attestation by the ICI that all requirements of § 89.607–95 and § 89.610 have been met; and

(10) Such other information as is deemed necessary by the Administrator.

(c) EPA approval for final admission of a nonroad engine under this section is presumed not to have been granted if any requirement of this subpart has not been met.

(d) Except as provided in paragraph (c) of this section, EPA approval for final admission of a nonroad engine under this section is presumed to have been granted if the ICI does not receive oral or written notice from EPA to the contrary within 15 working days of the date that the Engine Programs and Compliance Division of EPA receives the ICI's application under paragraph (b) of this section. Such EPA notice of nonapproval may be made to any employee of the ICI. It is the responsibility of the ICI to ensure that the Engine Programs and Compliance Division of EPA receives the application and to confirm the date of receipt. During this 15 working day hold period, the nonroad engine is stored at a location where the Administrator has reasonable access to the nonroad engine for the Administrator's inspection. The storage is to be within 50 miles of the ICI's testing facility to allow the Administrator reasonable access for inspection and testing. A storage facility not meeting this criterion must be approved in writing by the Administrator prior to the submittal of the ICI's application under paragraph (b) of this section.

(e) *EPA list of ICIs ineligible to import nonroad engines for modification/test.* EPA maintains a current list of ICIs who have been determined to be ineligible to import nonroad engines under this section. The determination of ineligibility is made in accordance with the criteria and procedures in § 89.612(e) of this subpart.

(f) *Inspections.* Prior to final admission, a nonroad engine imported under this section is subject to special inspections as described in § 89.606 with these additional provisions:

(1) If, in the judgment of the Administrator, a significant number of nonroad engines imported by an ICI fail to comply with emission requirements upon inspection or retest or if the ICI fails to comply with a provision of these regulations that pertain to nonroad engines imported pursuant to § 89.609, the ICI may be placed on the EPA list of ICIs ineligible to import nonroad engines under this section as specified in paragraph (e) of this section and § 89.612(e).

(2) An individual nonroad engine which fails a retest or inspection is to be repaired and retested, as applicable, to demonstrate compliance with emission requirements before final admission is granted by EPA.

(3) Unless otherwise specified by EPA, the ICI bears the costs of all retesting under this subsection, including transportation.

(g) *In-use inspection and testing.* A nonroad engine imported under this section may be tested or inspected by EPA at any time during the recall period specified in § 89.104(b), in accordance with § 89.608(a). If, in the judgment of the Administrator, a significant number of properly maintained and used nonroad engines imported by the ICI pursuant to this section fail to meet emission requirements, the name of the ICI may be placed on the EPA list of ICIs ineligible to import nonroad engines under the modification/test provision as specified in paragraph (e) of this section and § 89.612(e).

[59 FR 31335, June 17, 1994. Redesignated and amended at 63 FR 56996, 57021, Oct. 23, 1998]

§ 89.610 Maintenance instructions, warranties, emission labeling.

The provisions of this section are applicable to all nonroad engines imported under the provisions of § 89.605 or § 89.609.

(a) *Maintenance instructions.* (1) The Independent Commercial Importer (ICI) must furnish to the purchaser, or to the owner of each nonroad engine imported under § 89.605 or § 89.609 of this subpart, written instructions for the maintenance and use of the nonroad engine by the purchaser or owner. Each application for final admission of a nonroad engine is to provide an attestation that such instructions have been or will be (if the ultimate purchaser is unknown) furnished to the purchaser or owner of such nonroad engine at the time of sale or delivery. The ICI must maintain a record of having furnished such instructions.

(2) For each nonroad engine imported under § 89.609, a copy of the maintenance and use instructions is to be maintained in a file containing the records for that nonroad engine.

(3) The maintenance and use instructions are not to contain requirements more restrictive than those set forth in § 89.109 (Maintenance Instructions) and are to be in sufficient detail and clarity that a mechanic of average training and ability can maintain or repair the nonroad engine.

(4) For each nonroad engine imported pursuant to § 89.605 or § 89.609, ICIs must furnish with each nonroad engine a list of the emission control parts, emission-related parts added by the ICI, and the emission control and emission-related parts furnished by the Original Engine Manufacturer (OEM).

(5) The information required in this section to be furnished to the ultimate purchaser or owner is to be copied and maintained in a file containing the records for that nonroad engine prior to submitting each application for final admission pursuant to § 89.605(a) or § 89.609(b).

(b) *Warranties.* (1) ICIs must submit to the Engine Programs and Compliance Division of EPA sample copies (including revisions) of any warranty documents required by this section prior to importing nonroad engines under this subpart.

(2) ICIs must provide to nonroad engine owners emission warranties identical to those required by sections 207(a) of the Act. The warranty period for each nonroad engine is to commence on the date the nonroad engine is delivered by the ICI to the ultimate purchaser or owner.

(3) ICIs must provide warranty insurance coverage by a prepaid mandatory service insurance policy underwritten by an independent insurance company. The policy is to:

(i) Be subject to the approval of the Administrator if the insurance coverage is less than the required warranty;

(ii) At a minimum, provide coverage for emission-related components installed or modified by the ICI and, to the maximum extent possible, the emission-related components installed by the OEM;

(iii) Be transferable to each successive owner for the periods specified in § 89.104(c); and

(iv) Provide that in the absence of an ICI's facility being reasonably available (that is, within 50 miles) for performance of warranty repairs, the warranty repairs may be performed anywhere.

(4) ICIs must attest in each application for final admission that the warranty requirements have been met, that the mandatory insurance has been paid and is in effect, and that certificates and statements of the warranties have been or will be provided to the owner or ultimate purchaser. A copy of the warranties and evidence that the warranties are paid and in effect is to be maintained in a file containing the records for each nonroad engine prior to submitting each application for final admission pursuant to § 89.605(a) or § 89.609(b).

(c) *Emission labeling.* (1) For each nonroad engine imported pursuant to § 89.605 or § 89.609, the ICI must affix a permanent legible label which identifies each nonroad engine and also satisfies the following:

(i) The label meets all the requirements of § 89.110 and contains the following statement ''This nonroad engine was originally produced in (month and year of original production). It has been imported and modified by (ICI's name, address, and telephone number) to conform to United States emission regulations applicable to the (year) model year.''

(ii) If the nonroad engine is owned by the ICI at the time of importation, the label also states ''This nonroad engine is warranted for five years or 3000 hours of operation from the date of purchase, whichever first occurs.''

(iii) If the nonroad engine is not owned by the ICI at the time of importation, the label states ''This nonroad engine is warranted for five years or 3000 hours of operation from the date of release to the owner, whichever first occurs.''

(iv) For nonroad engines imported under § 89.609, the label clearly states in bold letters that ''This nonroad engine has not been manufactured under a certificate of conformity but conforms to United States emission regulations under a modification/test program.'' For all nonroad engines imported pursuant to § 89.605 or § 89.609, the label contains the vacuum hose routing diagram applicable to the nonroad engines.

(2) As part of the application to the Administrator for final admission of each individual nonroad engine under § 89.609, the ICI must maintain a copy of the labels for each nonroad engine in a file containing the records for that nonroad engine prior to submitting each application for final admission. ICIs importing under § 89.605 or § 89.609 must attest to compliance with the preceding labeling requirements of this section in each application for final admission.

[59 FR 31335, June 17, 1994. Redesignated and amended at 63 FR 56996, 57021, Oct. 23, 1998]

§ 89.611 Exemptions and exclusions.

(a) Individuals, as well as ICIs, are eligible for importing nonroad engines into the United States under the provisions of this section, unless otherwise specified.

(b) Notwithstanding other requirements of this subpart, a nonroad engine entitled to one of the temporary exemptions of this paragraph may be conditionally admitted into the United States if prior written approval for the conditional admission is obtained from the Administrator. Conditional admission is to be under bond. The Administrator may request that the U.S. Customs Service require a specific bond amount to ensure compliance with the requirements of the Act and this subpart. A written request for approval from the Administrator is to contain the identification required in § 89.604(a) (except for § 89.604(a)(5)) and information that demonstrates that the importer is entitled to the exemption. Noncompliance with provisions of this section may result in the forfeiture of the total amount of the bond or exportation of the nonroad engine. The following temporary exemptions are permitted by this paragraph:

(1) *Exemption for repairs or alterations.* A person may conditionally import under bond a nonconforming engine solely for purpose of repairs or alterations. The engine may not be operated in the United States other than for the sole purpose of repair or alteration or shipment to the point of repair or alteration and to the port of export. It

may not be sold or leased in the United States and is to be exported upon completion of the repairs or alterations.

(2) *Testing exemption.* A test nonroad engine may be conditionally imported by a person subject to the requirements of § 89.905. A test nonroad engine may be operated in the United States provided that the operation is an integral part of the test. This exemption is limited to a period not exceeding one year from the date of importation unless a request is made by the appropriate importer concerning the nonroad engine in accordance with § 89.905(f) for a subsequent one-year period.

(3) *Precertification exemption.* A prototype nonroad engine for use in applying to EPA for certification pursuant to this subpart may be conditionally imported subject to applicable provisions of § 89.906 and the following requirements:

(i) No more than one prototype nonroad engine for each engine family for which an importer is seeking certification is to be imported.

(ii) The granting of precertification exemptions by the Administrator is discretionary. Normally, no more than three outstanding precertification exemptions are allowed for each importer. No precertification exemption is allowed if the importer requesting the exemption is in noncompliance with any requirement of this subpart until the noncompliance is corrected.

(iii) Unless a certificate of conformity is issued for the prototype nonroad engine and the nonroad engine is finally admitted pursuant to the requirements of § 89.605 within 180 days from the date of entry, the total amount of the bond is to be forfeited or the nonroad engine exported unless an extension is granted by the Administrator. A request for an extension is to be in writing and received by the Administrator prior to the date that the precertification exemption expires.

(iv) Such precertification nonroad engine may not be operated in the United States other than for the sole purpose of the precertification exemption.

(4) *Display exemptions.* (i) A nonroad engine intended solely for display may be conditionally imported subject to the requirements of § 89.907.

(ii) A display nonroad engine may be imported by any person for purposes related to a business or the public interest. Such purposes do not include collections normally inaccessible or unavailable to the public on a daily basis, display of a nonroad engine at a dealership, private use, or other purpose that the Administrator determines is not appropriate for display exemptions. A display nonroad engine may not be sold in the United States and may not be operated in the United States except for the operation incident and necessary to the display purpose.

(iii) A temporary display exemption is granted for 12 months or for the duration of the display purpose, whichever is shorter. Two extensions of up to 12 months each are available upon approval by the Administrator. In no circumstances, however, may the total period of exemption exceed 36 months. The U.S. Customs Service bonds a temporary display exemption.

(c) Notwithstanding any other requirement of this subpart, a nonroad engine may be finally admitted into the United States under this paragraph if prior written approval for such final admission is obtained from the Administrator. Conditional admission of these nonroad engines under this subpart is not permitted for the purpose of obtaining such written approval from the Administrator. A request for approval is to contain the identification information required in § 89.604(a) (except for § 89.604(a)(5)) and information that demonstrates that the importer is entitled to the exemption or exclusion. The following exemptions or exclusions are permitted by this paragraph:

(1) *National security exemption.* A nonroad engine may be imported under the national security exemption found at § 89.908.

(2) *Hardship exemption.* The Administrator may exempt on a case-by-case basis a nonroad engine from federal emission requirements to accommodate unforeseen cases of extreme hardship or extraordinary circumstances.

(3) *Exemption for nonroad engines identical to United States certified versions.* (i)

A person (including businesses) is eligible for importing a nonroad engine into the United States under the provisions of this paragraph. An exemption will be granted if the nonroad engine:

(A) is owned by the importer;

(B) is not offered for importation for the purpose of resale; and

(C) is proven to be identical, in all material respects, to a nonroad engine certified by the Original Engine Manufacturer (OEM) for sale in the United States or is proven to have been modified to be identical, in all material respects, to a nonroad engine certified by the OEM for sale in the United States according to complete written instructions provided by the OEM's United States representative, or his/her designee.

(ii) *Proof of conformity.* (A) Documentation submitted pursuant to this section for the purpose of proving conformity of individual nonroad engines is to contain sufficiently organized data or evidence demonstrating that the nonroad engine identified pursuant to § 89.604(a) is identical, in all material respects, to a nonroad engine identified in an OEM's application for certification.

(B) If the documentation does not contain all the information required by this part, or is not sufficiently organized, EPA notifies the importer of any areas of inadequacy, and that the documentation does not receive further consideration until the required information or organization is provided.

(C) If EPA determines that the documentation does not clearly or sufficiently demonstrate that a nonroad engine is eligible for importation, EPA notifies the importer in writing.

(D) If EPA determines that the documentation clearly and sufficiently demonstrates that a nonroad engine is eligible for importation, EPA grants approval for importation and notifies the importer in writing. Notwithstanding any other requirement of this subpart, the notice constitutes approval for final admission into the United States.

(d) Foreign diplomatic and military personnel may import a nonconforming nonroad engine without bond. At the time of admission, the importer must submit to the Administrator the written report required in § 89.604(a) (except for information required by § 89.604(a)(5)) and a statement from the U.S. Department of State confirming qualification for this exemption. The nonroad engine may not be sold in the United States and must be exported if the individual's diplomatic status is no longer applicable, as determined by the Department of State, unless subsequently brought into conformity in accordance with §§ 89.605, 89.609, or 89.611(c)(3).

(e) *Competition exclusion.* A nonconforming engine may be imported by any person provided the importer demonstrates to the Administrator that the engine is used to propel a vehicle used solely for competition and obtains prior written approval from the Administrator. A nonconforming engine imported pursuant to this paragraph may not be operated in the United States except for that operation incident and necessary for the competition purpose, unless subsequently brought into conformity with United States emission requirements in accordance with §§ 89.605, 89.609, or 89.611(c)(3).

(f) *Exclusions/exemptions based on date of original manufacture.* (1) Notwithstanding any other requirements of this subpart, the following nonroad engines are excluded, as determined by the engine's gross power output, from the requirements of the Act in accordance with section 213 of the Act and may be imported by any person:

(i) All nonroad engines greater than or equal to 37 kW but less than 75 kW originally manufactured prior to January 1, 1998.

(ii) All nonroad engines greater than or equal to 75 kW but less than 130 kW originally manufactured prior to January 1, 1997.

(iii) All nonroad engines greater than or equal to 130 kW but less than or equal to 560 kW originally manufactured prior to January 1, 1996.

(iv) All nonroad engines greater than 560 kW originally manufactured prior to January 1, 2000.

(v) All nonroad engines greater than or equal to 19 kW but less than 37 kW originally manufactured prior to January 1, 1999.

(vi) All nonroad engines less than 19 kW originally manufactured prior to January 1, 2000.

(2) Notwithstanding other requirements of this subpart, a nonroad engine not subject to an exclusion under § 89.611(f)(1) but greater than 20 original production (OP) years old is entitled to an exemption from the requirements of the Act, provided that it has not been modified in those 20 OP years and it is imported into the United States by an ICI. At the time of admission, the ICI must submit to the Administrator the written report required in § 89.604(a) (except for information required by § 89.604(a)(5)).

(g) An application for exemption and exclusion provided for in paragraphs (b), (c), and (e) of this section is to be mailed to: U.S. Environmental Protection Agency, Office of Mobile Sources, Engine Programs and Compliance Division (6405–J), 1200 Pennsylvania Ave., NW., Washington, DC 20460, Attention: Imports.

[59 FR 31335, June 17, 1994. Redesignated and amended at 63 FR 56996, 57022, Oct. 23, 1998; 70 FR 40446, July 13, 2005; 72 FR 53129, Sept. 18, 2007]

§ 89.612 Prohibited acts; penalties.

(a) The importation of a nonroad engine, including a nonroad engine incorporated into a nonroad vehicle or nonroad equipment, which is not covered by a certificate of conformity other than in accordance with this subpart and the entry regulations of the U.S. Customs Service is prohibited. Failure to comply with this section is a violation of section 213(d) and section 203 of the Act.

(b) Unless otherwise permitted by this subpart, during a period of conditional admission, the importer of a nonroad engine may not:

(1) Register, license, or operate the nonroad engine in the United States;

(2) Sell or offer the nonroad engine for sale;

(3) Store the nonroad engine on the premises of a dealer (unless approved by the Administrator), owner, or purchaser;

(4) Relinquish control of the nonroad engine to the owner or purchaser; or

(5) Cause a nonroad engine to be altered in any manner subsequent to modification and testing, if applicable, for which an application for final admission is based and submitted to the Administrator, unless approved in advance by the Administrator.

(c) A nonroad engine conditionally admitted pursuant to § 89.604 and not granted final admission within 120 days of such conditional admission, or within such additional time as the Administrator and the U.S. Customs Service may allow, is deemed to be unlawfully imported into the United States in violation of section 213(d) and section 203 of the Act, unless the nonroad engine has been delivered to the U.S. Customs Service for export or other disposition under applicable Customs laws and regulations. A nonroad engine not so delivered is subject to seizure by the U.S. Customs Service.

(d) An importer who violates section 213(d) and section 203 of the Act is subject to the provisions of section 209 of the Act and is also subject to a civil penalty under section 205 of the Act of not more than $32,500 for each nonroad engine subject to the violation.

In addition to the penalty provided in the Act, where applicable, a person or entity who imports an engine under the exemption provisions of § 89.611(b) and, who fails to deliver the nonroad engine to the U.S. Customs Service is liable for liquidated damages in the amount of the bond required by applicable Customs laws and regulations. The maximum penalty value listed in this paragraph (d) is shown for calendar year 2004. Maximum penalty limits for later years may be adjusted based on the Consumer Price Index. The specific regulatory provisions for changing the maximum penalties, published in 40 CFR part 19, reference the applicable U.S. Code citation on which the prohibited action is based.

(e)(1) An ICI whose nonroad engines imported under § 89.605 or § 89.609 fail to conform to federal emission requirements after modification and/or testing or who fails to comply with applicable provisions of this subpart, may, in addition to any other applicable sanctions and penalties, be subject to any, or all, of the following sanctions:

(i) The ICI's currently held certificates of conformity may be revoked or suspended;

(ii) The ICI may be deemed ineligible to apply for new certificates of conformity for up to three years; and

(iii) The ICI may be deemed ineligible to import nonroad engines under § 89.609 in the future and be placed on a list of ICIs ineligible to import nonroad engines under the provisions of § 89.609.

(2) Grounds for the actions described in paragraph (e)(1) of this section include, but are not limited to, the following:

(i) Action or inaction by the ICI or the laboratory performing the emission test on behalf of the ICI, which results in fraudulent, deceitful, or grossly inaccurate representation of any fact or condition which affects a nonroad engine's eligibility for admission to the United States under this subpart;

(ii) Failure of a significant number of imported nonroad engines to comply with federal emission requirements upon EPA inspection or retest; or

(iii) Failure by an ICI to comply with requirements of this subpart.

(3) The following procedures govern any decision to suspend, revoke, or refuse to issue certificates of conformity under this subpart:

(i) When grounds appear to exist for the actions described in paragraph (e)(1) of this section, the Administrator must notify the ICI in writing of any intended suspension or revocation of a certificate of conformity, proposed ineligibility to apply for new certificates of conformity, or intended suspension of eligibility to conduct modification/testing under § 89.609, and the grounds for such action.

(ii) Except as provided by paragraph (e)(3)(iv), the ICI must take the following actions before the Administrator will consider withdrawing notice of intent to suspend or revoke the ICI's certificate of conformity or to deem the ICI ineligible to apply for new certification or to deem the ICI ineligible to perform modification/testing under § 89.609:

(A) Submit a written report to the Administrator which identifies the reason for the noncompliance of the nonroad engine, describes the proposed remedy, including a description of any proposed quality control and/or quality assurance measures to be taken by the ICI to prevent the future occurrence of the problem, and states the date on which the remedies are to be implemented or

(B) Demonstrate that the nonroad engine does in fact comply with applicable regulations in this chapter by retesting, if applicable, the nonroad engine in accordance with the applicable emission test specified in subpart E of this part.

(iii) An ICI may request, within 15 calendar days of the Administrator's notice of intent to suspend or revoke the ICI's certificate of conformity or to deem the ICI ineligible to apply for new certificates or to deem the ICI ineligible to perform modification/testing under § 89.609, that the Administrator grant such ICI a hearing:

(A) As to whether the tests, if applicable, have been properly conducted,

(B) As to any substantial factual issue raised by the Administrator's proposed action.

(iv) If, after the Administrator notifies an ICI of the intent to suspend or revoke the ICI's certificate of conformity or to deem the ICI ineligible to apply for new certificates or to deem the ICI ineligible to perform modification/testing under § 89.609 and prior to any final suspension or revocation, the ICI demonstrates to the Administrator's satisfaction that the decision to initiate suspension or revocation of the certificate of conformity or eligibility to perform modification/testing under § 89.609 was based on erroneous information, the Administrator will withdraw the notice of intent.

(4) Hearings on suspensions and revocations of certificates of conformity or of eligibility to apply for new certificates or of eligibility to perform modification/testing under § 89.609 will be held in accordance with the following:

(i) The procedures prescribed by this section will apply whenever an ICI requests a hearing pursuant to paragraph (e)(3)(iii) of this section.

(ii) Hearings under paragraph (e)(3)(iii) will be held in accordance with the procedures outlined in § 86.614 of this chapter, where applicable, provided that where § 86.612 is referred to in § 86.614: § 86.612(a) is replaced by § 89.612(e)(2); and § 86.612(i) is replaced by § 89.612(e)(3)(iii).

(5) When a hearing is requested under this section and it clearly appears from the data or other information contained in the request for a hearing, or submitted at the hearing, that no genuine and substantial question of fact exists with respect to the issue of whether the ICI failed to comply with this subpart, the Administrator will enter an order denying the request for a hearing, or terminating the hearing, and suspending or revoking the certificate of conformity and/or deeming the ICI ineligible to apply for new certificates or to perform modification/testing under § 89.609.

(6) In lieu of requesting a hearing under paragraph (e)(3)(iii) of this section, an ICI may respond in writing to EPA's charges in the notice of intent to suspend or revoke. An ICI's written response must be received by EPA within 30 days of the date of EPA's notice of intent. No final decision to suspend or revoke will be made before that time.

[59 FR 31335, June 17, 1994. Redesignated at 63 FR 56996, Oct. 23, 1998, as amended at 70 FR 40446, July 13, 2005]

§ 89.613 Treatment of confidential information.

The provisions for treatment of confidential information as described in § 89.7 apply.

[59 FR 31335, June 17, 1994. Redesignated at 63 FR 56996, Oct. 23, 1998]

Subpart H—Recall Regulations

§ 89.701 Applicability.

The requirements of subpart H are applicable to all nonroad engines subject to the provisions of subpart A of part 89.

§ 89.702 Definitions.

The definitions in subpart A of this part apply to this subpart.

§ 89.703 Applicability of part 85, subpart S.

(a) Nonroad engines subject to provisions of subpart B of this part are subject to recall regulations specified in part 85, subpart S of this title, except for the items set forth in this section.

(b) Reference to section 214 of the Clean Air Act in § 85.1801 is replaced by reference to section 216 of the Clean Air Act.

(c) Reference to section 202 of the Act in § 85.1802(a) is replaced by reference to section 213 of the Act.

(d) Reference to ''family particulate emission limits as defined in Part 86 promulgated under section 202 of the Act'' in § 85.1803(a) and § 85.1805(a)(1) is replaced by reference to family emission limits as defined in part 89 promulgated under section 213 of the Act.

(e) Reference to ''vehicles or engines'' throughout the subpart is replaced by reference to ''engines.''

Subpart I—Emission Defect Reporting Requirements

§ 89.801 Applicability.

The requirements of subpart I are applicable to all nonroad engines subject to the provisions of subpart A of part 89. The requirement to report emission-related defects affecting a given class or category of engines remains applicable for five years from the end of the model year in which such engines were manufactured.

§ 89.802 Definitions.

The definitions in subpart A of this part apply to this subpart.

§ 89.803 Applicability of part 85, subpart T.

(a) Nonroad engines subject to provisions of subpart B of this part are subject to emission defect reporting requirements specified in part 85, subpart T of this chapter, except for the items set forth in this section.

(b) Section 85.1901 is replaced by § 89.801.

(c) Reference to the Clean Air Act, 42 U.S.C. 1857 in § 85.1902(a) is replaced by reference to the Clean Air Act, 42 U.S.C. 7401.

(d) Reference to the ''approved Application for Certification required by 40 CFR 86.077–22 and like provisions of part 85 and part 86 of title 40 of the Code of Federal Regulations'' in § 85.1902(b) is replaced by reference to the approved application for certification required by § 89.115 and like provisions of part 89 of this chapter.

(e) Reference to section 202(d) of the Act in § 85.1902(c) is replaced by reference to section 202(d) and section 213 of the Act.

(f) Reference to section 214 of the Act in § 85.1902 (e) and (f) is replaced by reference to section 216 of the Act.

(g) Reference to ''vehicles or engines'' throughout the subpart is replaced by reference to ''engines.''

Subpart J—Exemption Provisions

§ 89.901 Applicability.

The requirements of subpart J are applicable to all nonroad engines subject to the provisions of subpart A of part 89.

§ 89.902 Definitions.

The definitions in subpart A of this part apply to this subpart. The following definitions also apply to this subpart.

Exemption means exemption from the prohibitions of § 89.1006.

Export exemption means an exemption granted under § 89.1004(b) for the purpose of exporting new nonroad engines.

National security exemption means an exemption which may be granted under § 89.1004(b) for the purpose of national security.

Manufacturer-owned nonroad engine means an uncertified nonroad engine owned and controlled by a nonroad engine manufacturer and used in a manner not involving lease or sale by itself or in a vehicle or piece of equipment employed from year to year in the ordinary course of business for product development, production method assessment, and market promotion purposes.

Testing exemption means an exemption which may be granted under § 89.1004(b) for the purpose of research investigations, studies, demonstrations or training, but not including national security.

§ 89.903 Application of section 216(10) of the Act.

(a) For the purpose of determining the applicability of section 216(10) of the Act, an internal combustion engine (including the fuel system) that is not used in a motor vehicle is deemed a nonroad engine if it meets the definition in subpart A of this part.

(b) EPA will maintain a list of nonroad engines that have been determined to be excluded because they are used solely for competition. This list will be available to the public and may be obtained by writing to the following address: Chief, Selective Enforcement Auditing Section, Engine Programs and Compliance Division (6405–J), Environmental Protection Agency, 1200 Pennsylvania Ave., NW., Washington, DC 20460.

(c) Upon written request, EPA will make written determinations as to whether certain engines are or are not nonroad engines. Engines that are determined not to be nonroad engines are excluded from regulations under this part.

[59 FR 31335, June 17, 1994, as amended at 63 FR 57022, Oct. 23, 1998]

§ 89.904 Who may request an exemption.

(a) Any person may request a testing exemption under § 89.905.

(b) Any nonroad engine manufacturer may request a national security exemption under § 89.908.

(c) For nonroad engine manufacturers, nonroad engines manufactured for export purposes are exempt without application, subject to the provisions of § 89.909.

(d) For eligible manufacturers, as determined by § 89.906, manufacturer-owned nonroad engines are exempt without application, subject to the provisions of § 89.906.

(e) For any person, display nonroad engines are exempt without application, subject to the provisions of § 89.907.

§ 89.905 Testing exemption.

(a) Any person requesting a testing exemption must demonstrate the following:

(1) That the proposed test program has a purpose which constitutes an appropriate basis for an exemption in accordance with this section;

(2) That the proposed test program necessitates the granting of an exemption;

(3) That the proposed test program exhibits reasonableness in scope; and

(4) That the proposed test program exhibits a degree of control consonant

with the purpose of the test program and EPA's monitoring requirements.

(5) Paragraphs (b), (c), (d), and (e) of this section describe what constitutes a sufficient demonstration for each of the four identified elements.

(b) With respect to the purpose of the proposed test program, an appropriate purpose would be research, investigations, studies, demonstrations, or training, but not national security. A concise statement of purpose is a required item of information.

(c) With respect to the necessity that an exemption be granted, necessity arises from an inability to achieve the stated purpose in a practicable manner without performing or causing to be performed one or more of the prohibited acts under § 89.1003. In appropriate circumstances, time constraints may be a sufficient basis for necessity, but the cost of certification alone, in the absence of extraordinary circumstances, is not a basis for necessity.

(d) With respect to reasonableness, a test program must exhibit a duration of reasonable length and affect a reasonable number of engines. In this regard, required items of information include:

(1) An estimate of the program's duration, and

(2) The maximum number of nonroad engines involved.

(e) With respect to control, the test program must incorporate procedures consistent with the purpose of the test and be capable of affording EPA monitoring capability. As a minimum, required items of information include:

(1) The technical nature of the test;

(2) The site of the test;

(3) The time or mileage duration of the test;

(4) The ownership arrangement with regard to the engines involved in the test;

(5) The intended final disposition of the engines;

(6) The manner in which the engine identification numbers will be identified, recorded, and made available; and

(7) The means or procedure whereby test results will be recorded.

(f) A manufacturer of new nonroad engines may request a testing exemption to cover nonroad engines intended for use in test programs planned or anticipated over the course of a subsequent one-year period. Unless otherwise required by the Director, Engine Programs and Compliance Division, a manufacturer requesting such an exemption need only furnish the information required by paragraphs (a)(1) and (d)(2) of this section along with a description of the record-keeping and control procedures that will be employed to assure that the engines are used for purposes consistent with paragraph (a) of this section.

[59 FR 31335, June 17, 1994, as amended at 63 FR 57022, Oct. 23, 1998]

§ 89.906 Manufacturer-owned exemption and precertification exemption.

(a) Except as provided in paragraph (b) of this section, any manufacturer-owned nonroad engine, as defined by § 89.902, is exempt from § 89.1003, without application, if the manufacturer complies with the following terms and conditions:

(1) The manufacturer must establish, maintain, and retain the following adequately organized and indexed information on each exempted engine:

(i) Engine identification number,

(ii) Use of the engine on exempt status and

(iii) Final disposition of any engine removed from exempt status; and

(2) The manufacturer must provide right of entry and access to these records to EPA authorized representatives as outlined in § 89.506.

(3) Unless the requirement is waived or an alternate procedure is approved by the Director, Engine Programs and Compliance Division, the manufacturer must permanently affix a label to each nonroad engine on exempt status. This label should:

(i) Be affixed in a readily visible portion of the engine,

(ii) Be attached in such a manner that cannot be removed without destruction or defacement,

(iii) State in the English language and in block letters and numerals of a color that contrasts with the background of the label, the following information:

(A) The label heading ''Emission Control Information;''

(B) Full corporate name and trademark of manufacturer;

(C) Engine displacement, engine family identification, and model year of engine; or person of office to be contacted for further information about the engine;

(D) The statement ''This nonroad engine is exempt from the prohibitions of 40 CFR 89.1003.''

(4) No provision of paragraph (a)(3) of this section prevents a manufacturer from including any other information it desires on the label.

(b) Any independent commercial importer that desires a precertification exemption pursuant to § 89.611(b)(3) and is in the business of importing, modifying, or testing uncertified nonroad engines for resale under the provisions of subpart G of this part, must apply to the Director, Engine Programs and Compliance Division. The Director may require such independent commercial importer to submit information regarding the general nature of the fleet activities, the number of nonroad engines involved, and a demonstration that adequate record-keeping procedures for control purposes will be employed.

[59 FR 31335, June 17, 1994, as amended at 63 FR 57022, Oct. 23, 1998]

§ 89.907 Display exemption.

Where an uncertified nonroad engine is a display engine to be used solely for display purposes, will only be operated incident and necessary to the display purpose, and will not be sold unless an applicable certificate of conformity has been received or the engine has been finally admitted pursuant to subpart G of this part, no request for exemption of the engine is necessary.

§ 89.908 National security exemption.

(a)(1) Any nonroad engine, otherwise subject to this part, which is used in a vehicle that exhibits substantial features ordinarily associated with military combat such as armor and/or permanently affixed weaponry and which will be owned and/or used by an agency of the federal government with responsibility for national defense, will be considered exempt from these regulations for purposes of national security. No request for exemption is necessary.

(2) Manufacturers may request a national security exemption for any nonroad engine, otherwise subject to this part, which does not meet the conditions described in paragraph (a)(1) of this section. A manufacturer requesting a national security exemption must state the purpose for which the exemption is required and the request must be endorsed by an agency of the federal government charged with responsibility for national defense.

(b) EPA will maintain a list of models of nonroad engines (and the vehicles which use them) that have been granted a national security exemption under paragraph (a)(2) of this section. This list will be available to the public and may be obtained by writing to the following address: Group Manager, Engine Compliance Programs Group, Engine Programs and Compliance Division (6403J) Environmental Protection Agency, 1200 Pennsylvania Ave., NW., Washington, DC 20460.

(c) Manufacturers must add a legible label, written in block letters in English, to each engine exempted under this section. The label must be permanently secured to a readily visible part of the engine needed for normal operation and not normally requiring replacement, such as the engine block. This label must include at least the following items:

(1) The label heading ''EMISSION CONTROL INFORMATION''.

(2) Your corporate name and trademark.

(3) Engine displacement, engine family identification (as applicable), and model year of the engine or whom to contact for further information.

(4) The statement ''THIS ENGINE HAS AN EXEMPTION FOR NATIONAL SECURITY UNDER 40 CFR 89.908.''.

[61 FR 52102, Oct. 4, 1996, as amended at 69 FR 39213, June 29, 2004]

§ 89.909 Export exemptions.

(a) A new nonroad engine intended solely for export, and so labeled or tagged on the outside of the container and on the engine itself, is subject to the provisions of § 89.1003, unless the importing country has new nonroad engine emission standards which differ from EPA standards.

(b) For the purpose of paragraph (a) of this section, a country having no standards, whatsoever, is deemed to be a country having emission standards which differ from EPA standards.

(c) EPA will maintain a list of foreign countries that have in force nonroad emission standards identical to EPA standards and have so notified EPA. This list may be obtained by writing to the following address: Chief, Selective Enforcement Auditing Section, Manufacturers Operations Division (6405–J), Environmental Protection Agency, 1200 Pennsylvania Ave., NW., Washington, DC 20460. New nonroad engines exported to such countries must comply with EPA certification regulations.

(d) It is a condition of any exemption for the purpose of export under paragraph (a) of this section, that such exemption is void ab initio with respect to a new nonroad engine intended solely for export, where such nonroad engine is sold, or offered for sale, to an ultimate purchaser or otherwise distributed or introduced into commerce in the United States for purposes other than export.

§ 89.910 Granting of exemptions.

(a) If upon completion of the review of an exemption request made pursuant to § 89.905 or § 89.908, EPA determines it is appropriate to grant such an exemption, a memorandum of exemption is to be prepared and submitted to the person requesting the exemption. The memorandum is to set forth the basis for the exemption, its scope, and such terms and conditions as are deemed necessary. Such terms and conditions generally include, but are not limited to, agreements by the applicant to conduct the exempt activity in the manner described to EPA, create and maintain adequate records accessible to EPA at reasonable times, employ labels for the exempt engines setting forth the nature of the exemption, take appropriate measures to assure that the terms of the exemption are met, and advise EPA of the termination of the activity and the ultimate disposition of the engines.

(b) Any exemption granted pursuant to paragraph (a) of this section is deemed to cover any subject engine only to the extent that the specified terms and conditions are complied with. A breach of any term or condition causes the exemption to be void ab initio with respect to any engine. Consequently, the causing or the performing of an act prohibited under § 89.1003(a)(1) or (a)(3), other than in strict conformity with all terms and conditions of this exemption, renders the person to whom the exemption is granted, and any other person to whom the provisions of § 89.1003(a) are applicable, liable to suit under sections 204 and 205 of the Act.

(c) Manufacturers may ask EPA to apply the provisions of 40 CFR 1068.201(i) to engines exempted or excluded under this subpart.

[59 FR 31335, June 17, 1994, as amended at 69 FR 39213, June 29, 2004]

§ 89.911 Submission of exemption requests.

Requests for exemption or further information concerning exemptions and/or the exemption request review procedure should be addressed to: Chief, Selective Enforcement Auditing Section, Engine Programs and Compliance Division (6405–J), Environmental Protection Agency, 1200 Pennsylvania Ave., NW., Washington, DC 20460.

[63 FR 57022, Oct. 23, 1998]

§ 89.912 Treatment of confidential information.

The provisions for treatment of confidential information as described in § 89.7 apply.

§ 89.913 What provisions apply to engines certified under the motor-vehicle program?

You may use the provisions of 40 CFR 1039.605 to introduce new nonroad engines into commerce if they are already certified to the requirements that apply to compression-ignition engines under 40 CFR parts 85 and 86. However, when using the provisions of 40 CFR 1039.605, references to this part 89 or sections in this part shall be used instead of references to 40 CFR part 1039 or sections in that part.

[70 FR 40447, July 13, 2005]

§ 89.914 What provisions apply to vehicles certified under the motor-vehicle program?

You may use the provisions of 40 CFR 1039.610 to introduce new nonroad engines or equipment into commerce if the vehicle is already certified to the requirements that apply under 40 CFR parts 85 and 86. However, when using the provisions of 40 CFR 1039.610, references to this part 89 or sections in this part shall be used instead of references to 40 CFR part 1039 or sections in that part.

[70 FR 40447, July 13, 2005]

§ 89.915 Staged-assembly exemption.

You may ask us to provide a temporary exemption to allow you to complete production of your engines at different facilities, as long as you maintain control of the engines until they are in their certified configuration. We may require you to take specific steps to ensure that such engines are in their certified configuration before reaching the ultimate purchaser. You may request an exemption under this section in your application for certification, or in a separate submission.

[70 FR 40447, July 13, 2005]

§ 89.916 Emergency-vessel exemption for marine engines below 37 kW.

The prohibitions in § 89.1003(a)(1) do not apply to new marine engines used in lifeboats and rescue boats as described in 40 CFR 94.914.

[73 FR 37194, June 30, 2008]

Subpart K—General Enforcement Provisions and Prohibited Acts

§ 89.1001 Applicability.

The requirements of subpart K are applicable to all nonroad engines subject to the provisions of subpart A of part 89, and to all nonroad vehicles and equipment that contain such nonroad engines.

§ 89.1002 Definitions.

The definitions in subpart A of this part apply to this subpart.

§ 89.1003 Prohibited acts.

(a) The following acts and the causing thereof are prohibited:

(1)(i) In the case of a manufacturer of new nonroad engines, vehicles, or equipment for distribution in commerce, the sale, or the offering for sale, or the introduction, or delivery for introduction, into commerce, of any new nonroad engine manufactured after the applicable effective date under this part, or any nonroad vehicle or equipment containing such engine, unless such engine is covered by a certificate of conformity issued (and in effect) under regulations found in this part.

(ii) In the case of any person, except as provided in subpart G of this part, the importation into the United States of any new nonroad engine manufactured after the applicable effective date under this part, or any nonroad vehicle or equipment containing such engine, unless such engine is covered by a certificate of conformity issued (and in effect) under regulations found in this part.

(2)(i) For a person to fail or refuse to permit access to or copying of records or to fail to make reports or provide information required under § 89.1004.

(ii) For a person to fail or refuse to permit entry, testing, or inspection authorized under §§ 89.129, 89.506 or 89.1004.

(iii) For a person to fail or refuse to perform tests, or to have tests performed as required under §§ 89.119 or 89.1004.

(iv) For a person to fail to establish or maintain records as required under § 89.1004.

(3)(i) For a person to remove or render inoperative a device or element of design installed on or in a nonroad engine, vehicle or equipment in compliance with regulations under this part prior to its sale and delivery to the ultimate purchaser, or for a person knowingly to remove or render inoperative such a device or element of design after the sale and delivery to the ultimate purchaser; or

(ii) For a person to manufacture, sell or offer to sell, or install, a part or component intended for use with, or as part of, a nonroad engine, vehicle or equipment, where a principal effect of the part or component is to bypass, defeat, or render inoperative a device or

element of design installed on or in a nonroad engine in compliance with regulations issued under this part, and where the person knows or should know that the part or component is being offered for sale or installed for this use or put to such use; or

(iii) For a person to deviate from the provisions of § 89.130 when rebuilding an engine (or rebuilding a portion of an engine or engine system). Such a deviation violates paragraph (a)(3)(i) of this section.

(4) For a manufacturer of a new nonroad engine subject to standards prescribed under this part:

(i) To sell, offer for sale, or introduce or deliver into commerce, a nonroad engine unless the manufacturer has complied with the requirements of § 89.1007.

(ii) To sell, offer for sale, or introduce or deliver into commerce, a nonroad engine unless a label or tag is affixed to the engine in accordance with § 89.110.

(iii) To fail or refuse to comply with the requirements of § 89.1008.

(iv) Except as provided in § 89.109, to provide directly or indirectly in any communication to the ultimate purchaser or a subsequent purchaser that the coverage of a warranty under the Act is conditioned upon use of a part, component, or system manufactured by the manufacturer or a person acting for the manufacturer or under its control, or conditioned upon service performed by such persons.

(v) To fail or refuse to comply with the terms and conditions of the warranty under § 89.1007.

(5) For a person to circumvent or attempt to circumvent the residence time requirements of paragraph (2)(iii) of the nonroad engine definition in § 89.2.

(6) For a manufacturer of nonroad vehicles or equipment to distribute in commerce, sell, offer for sale, or introduce into commerce a nonroad vehicle or piece of equipment which contains an engine not covered by a certificate of conformity, except as otherwise allowed by this part.

(b) For the purposes of enforcement of this part, the following apply:

(1) Nothing in paragraph (a)(3) of this section is to be construed to require the use of manufacturer parts in maintaining or repairing a nonroad engine.

(2) Actions for the purpose of repair or replacement of a device or element of design or any other item are not considered prohibited acts under § 89.1003(a) if the action is a necessary and temporary procedure, the device or element is replaced upon completion of the procedure, and the action results in the proper functioning of the device or element of design.

(3) Actions for the purpose of a conversion of a nonroad engine for use of a clean alternative fuel (as defined in Title II of the Act) are not considered prohibited acts under § 89.1003(a) if:

(i) the vehicle complies with the applicable standard when operating on the alternative fuel, and the device or element is replaced upon completion of the conversion procedure, and

(ii) in the case of engines converted to dual fuel or flexible use, the action results in proper functioning of the device or element when the nonroad engine operates on conventional fuel.

(4) Certified nonroad engines shall be used in all vehicles and equipment manufactured on or after the applicable model years in § 89.112 that are self-propelled, portable, transportable, or are intended to be propelled while performing their function, unless the manufacturer of the vehicle or equipment can prove that the vehicle or equipment will be used in a manner consistent with paragraph (2) of the definition of nonroad engine in § 89.2. After the date on which a new standard takes effect, nonroad vehicle and equipment manufacturers may continue to use nonroad engines built prior to this date that are not certified to the standard until inventories of those engines are depleted; however, stockpiling of such nonroad engines will be considered a violation of this section.

(5)–(6) [Reserved]

(7) A new nonroad engine intended solely to replace a nonroad engine in a piece of nonroad equipment, where the engine requiring replacement is not certified or is certified to emission standards that are less stringent than those in effect when the replacement engine is built, shall not be subject to the prohibitions of paragraph (a)(1) of this section or to the requirements of

§ 89.105 and paragraph (b)(4) of this section, provided that:

(i) The engine manufacturer has ascertained that no engine produced by itself or by the manufacturer of the engine that is being replaced, if different, and certified to the requirements of this subpart, is available with the appropriate physical or performance characteristics to repower the equipment; and

(ii) The engine manufacturer or its agent takes ownership and possession of the engine being replaced or confirms that the engine has been destroyed; and

(iii) If the engine being replaced was not subject to any emission standards under this part, the replacement engine must have a permanent label with your corporate name and trademark and the following language, or similar alternate language approved by the Administrator: THIS ENGINE DOES NOT COMPLY WITH FEDERAL NONROAD OR ON-HIGHWAY EMISSION REQUIREMENTS. SALE OR INSTALLATION OF THIS ENGINE FOR ANY PURPOSE OTHER THAN AS A REPLACEMENT ENGINE FOR AN ENGINE MANUFACTURED PRIOR TO JANUARY 1 [INSERT APPROPRIATE YEAR] IS A VIOLATION OF FEDERAL LAW SUBJECT TO CIVIL PENALTY.

(iv) If the engine being replaced was subject to emission standards less stringent than those in effect when you produce the replacement engine, the replacement engine must have a permanent label with your corporate name and trademark and the following language, or similar alternate language approved by the Administrator:

THIS ENGINE COMPLIES WITH U.S. EPA NONROAD EMISSION REQUIREMENTS FOR [Identify the appropriate emission standards (by model year, tier, or emission levels) for the replaced engine] ENGINES UNDER 40 CFR 89.1003(b)(7). SELLING OR INSTALLING THIS ENGINE FOR ANY PURPOSE OTHER THAN TO REPLACE A [Identify the appropriate emission standards (by model year, tier, or emission levels) for the replaced engine] ENGINE MAY BE A VIOLATION OF FEDERAL LAW SUBJECT TO CIVIL PENALTY.

(v) If the old engine was subject to emission standards less stringent than those in effect when you produce the replacement engine, you must make the replacement engine in a configuration identical in all material respects to the old engine. You may alternatively make the replacement engine in a configuration identical in all material respects to another certified engine of the same or later model year, as long as the engine is not certified with a family emission limit higher than that of the engine being replaced.

(vi) Engines sold pursuant to the provisions of this paragraph (b)(7) will neither generate nor use emission credits and will not be part of any accounting under the averaging, banking and trading program.

(vii) In cases where an engine is to be imported for replacement purposes under the provisions of this paragraph (b)(7), the term ''engine manufacturer'' shall not apply to an individual or other entity that does not possess a current Certificate of Conformity issued by EPA under this part; and

(viii) The provisions of this section may not be used to circumvent emission standards that apply to new engines under this part.

[59 FR 31335, June 17, 1994, as amended at 61 FR 58106, Nov. 12, 1996; 63 FR 57022, Oct. 23, 1998; 70 FR 40447, July 13, 2005; 73 FR 59179, Oct. 8, 2008]

§ 89.1004 General enforcement provisions.

(a) *Information collection provisions.* (1) Every manufacturer of new nonroad engines and other persons subject to the requirements of this part must establish and maintain records, perform tests where such testing is not otherwise reasonably available under this part, make reports and provide information the Administrator may reasonably require to determine whether the manufacturer or other person has acted or is acting in compliance with this part or to otherwise carry out the provisions of this part, and must, upon request of an officer or employee duly designated by the Administrator, permit the officer or employee at reasonable times to have access to and copy such records. The manufacturer shall

comply in all respects with the requirements of subpart I of this part.

(2) For purposes of enforcement of this part, an officer or employee duly designated by the Administrator, upon presenting appropriate credentials, is authorized:

(i) To enter, at reasonable times, any establishment of the manufacturer, or of any person whom the manufacturer engaged to perform any activity required under paragraph (a) (1) of this section, for the purposes of inspecting or observing any activity conducted pursuant to paragraph (a)(1) of this section, and

(ii) To inspect records, files, papers, processes, controls, and facilities used in performing an activity required by paragraph (a)(1) of this section, by the manufacturer or by a person whom the manufacturer engaged to perform the activity.

(b) *Exemption provision*. The Administrator may exempt a new nonroad engine from § 89.1003 upon such terms and conditions as the Administrator may find necessary for the purpose of export, research, investigations, studies, demonstrations, or training, or for reasons of national security.

(c) *Importation provision*. (1) A new nonroad engine, vehicle, or equipment offered for importation or imported by a person in violation of § 89.1003 is to be refused admission into the United States, but the Secretary of the Treasury and the Administrator may, by joint regulation, provide for deferring a final determination as to admission and authorizing the delivery of such a nonroad engine offered for import to the owner or consignee thereof upon such terms and conditions (including the furnishing of a bond) as may appear to them appropriate to insure that the nonroad engine will be brought into conformity with the standards, requirements, and limitations applicable to it under this part.

(2) If a nonroad engine is finally refused admission under this paragraph, the Secretary of the Treasury shall cause disposition thereof in accordance with the customs laws unless it is exported, under regulations prescribed by the Secretary, within 90 days of the date of notice of the refusal or additional time as may be permitted pursuant to the regulations.

(3) Disposition in accordance with the customs laws may not be made in such manner as may result, directly or indirectly, in the sale, to the ultimate consumer, of a new nonroad engine that fails to comply with applicable standards of the Administrator under this part.

(d) *Export provision*. A new nonroad engine intended solely for export, and so labeled or tagged on the outside of the container and on the engine itself, shall be subject to the provisions of § 89.1003, except that if the country that is to receive the engine has emission standards that differ from the standards prescribed under subpart B of this part, then the engine must comply with the standards of the country that is to receive the engine.

§ 89.1005 Injunction proceedings for prohibited acts.

(a) The district courts of the United States have jurisdiction to restrain violations of § 89.1003(a).

(b) Actions to restrain violations of § 89.1003(a) must be brought by and in the name of the United States. In an action, subpoenas for witnesses who are required to attend a district court in any district may run into any other district.

§ 89.1006 Penalties.

(a) *Violations*. A violation of the requirements of this subpart is a violation of the applicable provisions of the Act, including sections 213(d) and 203, and is subject to the penalty provisions thereunder.

(1) A person who violates § 89.1003(a)(1), (a)(4), or (a)(6), or a manufacturer or dealer who violates § 89.1003(a)(3)(i), is subject to a civil penalty of not more than $32,500 for each violation.

(2) A person other than a manufacturer or dealer who violates § 89.1003(a)(3)(i) or any person who violates § 89.1003(a)(3)(ii) is subject to a civil penalty of not more than $2,750 for each violation.

(3) A violation with respect to § 89.1003 (a)(1), (a)(3)(i), (a)(4), or (a)(6) constitutes a separate offense with respect to each nonroad engine.

(4) A violation with respect to § 89.1003(a)(3)(ii) constitutes a separate offense with respect to each part or component. Each day of a violation with respect to § 89.1003(a)(5) constitutes a separate offense.

(5) A person who violates § 89.1003(a)(2) or (a)(5) is subject to a civil penalty of not more than $32,500 per day of violation.

(6) The maximum penalty values listed in this section are shown for calendar year 2004. Maximum penalty limits for later years may be adjusted based on the Consumer Price Index. The specific regulatory provisions for changing the maximum penalties, published in 40 CFR part 19, reference the applicable U.S. Code citation on which the prohibited action is based.

(b) *Civil actions.* The Administrator may commence a civil action to assess and recover any civil penalty under paragraph (a) of this section.

(1) An action under this paragraph may be brought in the district court of the United States for the district in which the defendant resides or has the Administrator's principal place of business, and the court has jurisdiction to assess a civil penalty.

(2) In determining the amount of a civil penalty to be assessed under this paragraph, the court is to take into account the gravity of the violation, the economic benefit or savings (if any) resulting from the violation, the size of the violator's business, the violator's history of compliance with Title II of the Act, action taken to remedy the violation, the effect of the penalty on the violator's ability to continue in business, and such other matters as justice may require.

(3) In any such action, subpoenas for witnesses who are required to attend a district court in any district may run into any other district.

(c) *Administrative assessment of certain penalties*—(1) Administrative penalty authority. In lieu of commencing a civil action under paragraph (b) of this section, the Administrator may assess any civil penalty prescribed in paragraph (a) of this section, except that the maximum amount of penalty sought against each violator in a penalty assessment proceeding shall not exceed $270,000, unless the Administrator and the Attorney General jointly determine that a matter involving a larger penalty amount is appropriate for administrative penalty assessment. Any such determination by the Administrator and the Attorney General is not subject to judicial review. Assessment of a civil penalty shall be by an order made on the record after opportunity for a hearing held in accordance with the procedures found at part 22 of this chapter. The Administrator may compromise, or remit, with or without conditions, any administrative penalty which may be imposed under this section.

(2) *Determining amount.* In determining the amount of any civil penalty assessed under this paragraph, the Administrator shall take into account the gravity of the violation, the economic benefit or savings (if any) resulting from the violation, the size of the violator's business, the violator's history of compliance with Title II of the Act, action taken to remedy the violation, the effect of the penalty on the violator's ability to continue in business, and such other matters as justice may require.

(3) *Effect of administrator's action.* (i) Action by the Administrator under this paragraph does not affect or limit the Administrator's authority to enforce any provisions of the Act; except that any violation with respect to which the Administrator has commenced and is diligently prosecuting an action under this paragraph, or for which the Administrator has issued a final order not subject to further judicial review and for which the violator has paid a penalty assessment under this paragraph shall not be the subject of a civil penalty action under paragraph (b) of this section.

(ii) No action by the Administrator under this paragraph shall affect a person's obligation to comply with a section of this part.

(4) *Finality of order.* An order issued under this subsection is to become final 30 days after its issuance unless a petition for judicial review is filed under paragraph (c)(5) of this section.

(5) *Judicial review.* A person against whom a civil penalty is assessed in accordance with this subsection may seek review of the assessment in the

United States District Court for the District of Columbia or for the district in which the violation is alleged to have occurred, in which such person resides, or where the person's principal place of business is located, within the 30-day period beginning on the date a civil penalty order is issued. The person shall simultaneously send a copy of the filing by certified mail to the Administrator and the Attorney General. The Administrator shall file in the court within 30 days a certified copy, or certified index, as appropriate, of the record on which the order was issued. The court is not to set aside or remand any order issued in accordance with the requirements of this paragraph unless substantial evidence does not exist in the record, taken as a whole, to support the finding of a violation or unless the Administrator's assessment of the penalty constitutes an abuse of discretion, and the court is not to impose additional civil penalties unless the Administrator's assessment of the penalty constitutes an abuse of discretion. In any proceedings, the United States may seek to recover civil penalties assessed under this section.

(6) *Collection.* (i) If any person fails to pay an assessment of a civil penalty imposed by the Administrator as provided in this part after the order making the assessment has become final or after a court in an action brought under paragraph (c)(5) of this section has entered a final judgment in favor of the Administrator, the Administrator shall request that the Attorney General bring a civil action in an appropriate district court to recover the amount assessed (plus interest at rates established pursuant to section 6621(a)(2) of the Internal Revenue Code of 1986 from the date of the final order or the date of final judgment, as the case may be). In such an action, the validity, amount, and appropriateness of the penalty is not subject to review.

(ii) A person who fails to pay on a timely basis the amount of an assessment of a civil penalty as described in paragraph (c)(6)(i) of this section shall be required to pay, in addition to that amount and interest, the United States' enforcement expenses, including attorney's fees and costs for collection proceedings, and a quarterly nonpayment penalty for each quarter during which the failure to pay persists. The nonpayment penalty is an amount equal to ten percent of the aggregate amount of that person's penalties and nonpayment penalties which are unpaid as of the beginning of such quarter.

[59 FR 31335, June 17, 1994, as amended at 70 FR 40447, July 13, 2005]

§ 89.1007 Warranty provisions.

(a) The manufacturer of each nonroad engine must warrant to the ultimate purchaser and each subsequent purchaser that the engine is designed, built, and equipped so as to conform at the time of sale with applicable regulations under section 213 of the Act, and is free from defects in materials and workmanship which cause such engine to fail to conform with applicable regulations for its warranty period (as determined under § 89.104).

(b) In the case of a nonroad engine part, the manufacturer or rebuilder of the part may certify according to § 85.2112 that use of the part will not result in a failure of the engine to comply with emission standards promulgated in this part.

(c) For the purposes of this section, the owner of any nonroad engine warranted under this part is responsible for the proper maintenance of the engine. Proper maintenance includes replacement and service, at the owner's expense at a service establishment or facility of the owner's choosing, of all parts, items, or devices related to emission control (but not designed for emission control) under the terms of the last sentence of section 207(a)(3) of the Act, unless such part, item, or device is covered by any warranty not mandated by this Act.

[59 FR 31335, June 17, 1994, as amended at 63 FR 57023, Oct. 23, 1998]

§ 89.1008 In-use compliance provisions.

(a) Effective with respect to nonroad vehicles, equipment, and engines manufactured during model years 1996 and after:

(1) If the Administrator determines that a substantial number of any class

or category of engines, although properly maintained and used, do not conform to the regulations prescribed under section 213 of the Act when in actual use throughout their recall period (as defined under § 89.104(b)), the Administrator shall immediately notify the manufacturer of such nonconformity and require the manufacturer to submit a plan for remedying the nonconformity of the engines with respect to which such notification is given.

(i) The manufacturer's plan shall provide that the nonconformity of any such engines which are properly used and maintained will be remedied at the expense of the manufacturer.

(ii) If the manufacturer disagrees with such determination of nonconformity and so advises the Administrator, the Administrator shall afford the manufacturer and other interested persons an opportunity to present their views and evidence in support thereof at a public hearing. Unless, as a result of such hearing, the Administrator withdraws such determination of nonconformity, the Administrator shall, within 60 days after the completion of such hearing, order the manufacturer to provide prompt notification of such nonconformity in accordance with paragraph (a)(2) of this section. The manufacturer shall comply in all respects with the requirements of subpart G of this part.

(2) Any notification required to be given by the manufacturer under paragraph (a)(1) of this section with respect to any class or category of engines shall be given to dealers, ultimate purchasers, and subsequent purchasers (if known) in such manner and containing such information as required in subparts H and I of this part.

(3)(i) The manufacturer shall furnish with each new nonroad engine written instructions for the proper maintenance and use of the engine by the ultimate purchaser as required under § 89.109. The manufacturer shall provide in boldface type on the first page of the written maintenance instructions notice that maintenance, replacement, or repair of the emission control devices and systems may be performed by any nonroad engine repair establishment or individual using any nonroad engine part which has been certified as provided in § 89.1007(a).

(ii) The instruction under paragraph (3)(i) of this section must not include any condition on the ultimate purchaser's using, in connection with such engine, any component or service (other than a component or service provided without charge under the terms of the purchase agreement) which is identified by brand, trade, or corporate name. Subject instructions also must not directly or indirectly distinguish between service performed by the franchised dealers of such manufacturer, or any other service establishments with which such manufacturer has a commercial relationship, and service performed by independent nonroad engine repair facilities with which such manufacturer has no commercial relationship.

(iii) The prohibition of paragraph (a)(3)(ii) of this section may be waived by the Administrator if:

(A) The manufacturer satisfies the Administrator that the engine will function properly only if the component or service so identified is used in connection with such engine, and

(B) The Administrator finds that such a waiver is in the public interest.

(iv) In addition, the manufacturer shall indicate by means of a label or tag permanently affixed to the engine that the engine is covered by a certificate of conformity issued for the purpose of assuring achievement of emission standards prescribed under section 213 of the Act. This label or tag shall also contain information relating to control of emissions as prescribed under § 89.110.

(b) The manufacturer bears all cost obligation a dealer incurs as a result of a requirement imposed by paragraph (a) of this section. The transfer of any such cost obligation from a manufacturer to a dealer through franchise or other agreement is prohibited.

(c) If a manufacturer includes in an advertisement a statement respecting the cost or value of emission control devices or systems, the manufacturer shall set forth in the statement the cost or value attributed to these devices or systems by the Secretary of Labor (through the Bureau of Labor Statistics). The Secretary of Labor,

and his or her representatives, has the same access for this purpose to the books, documents, papers, and records of a manufacturer as the Comptroller General has to those of a recipient of assistance for purposes of section 311 of the Act.

(d) Any inspection of a nonroad engine for purposes of paragraph (a)(1) of this section, after its sale to the ultimate purchaser, is to be made only if the owner of such vehicle or engine voluntarily permits such inspection to be made, except as may be provided by any state or local inspection program.

§ 89.1009 What special provisions apply to branded engines?

A manufacturer identifying the name and trademark of another company on the emission control information label, as provided by § 89.110(b)(2), must comply with the provisions of 40 CFR 1039.640.

[70 FR 40448, July 13, 2005]

PART 90—CONTROL OF EMISSIONS FROM NONROAD SPARK-IGNITION ENGINES AT OR BELOW 19 KILOWATTS

Subpart A—General

Sec.
90.1 Applicability.
90.2 Effective dates.
90.3 Definitions.
90.4 Treatment of confidential information.
90.5 Acronyms and abbreviations.
90.6 Table and figure numbering; position.
90.7 Reference materials.

Subpart B—Emission Standards and Certification Provisions

90.101 Applicability.
90.102 Definitions.
90.103 Exhaust emission standards.
90.104 Compliance with emission standards.
90.105 Useful life periods for Phase 2 engines.
90.106 Certificate of conformity.
90.107 Application for certification.
90.108 Certification.
90.109 Requirement of certification—closed crankcase.
90.110 Requirement of certification—prohibited controls.
90.111 Requirement of certification—prohibition of defeat devices.
90.112 Requirement of certification—adjustable parameters.
90.113 In-use testing program for Phase 1 engines.
90.114 Requirement of certification—engine information label.
90.115 Requirement of certification—supplying production engines upon request.
90.116 Certification procedure—determining engine displacement, engine class, and engine families.
90.117 Certification procedure—test engine selection.
90.118 Certification procedure—service accumulation and usage of deterioration factors.
90.119 Certification procedure—testing.
90.120 Certification procedure—use of special test procedures.
90.121 Certification procedure—recordkeeping.
90.122 Amending the application and certificate of conformity.
90.123 Denial, revocation of certificate of conformity.
90.124 Request for hearing.
90.125 Hearing procedures.
90.126 Right of entry and access.
90.127 Fuel line permeation from nonhandheld engines and equipment.
90.128 Installation instructions.
90.129 Fuel tank permeation from handheld engines and equipment.

Subpart C—Certification Averaging, Banking, and Trading Provisions

90.201 Applicability.
90.202 Definitions.
90.203 General provisions.
90.204 Averaging.
90.205 Banking.
90.206 Trading.
90.207 Credit calculation and manufacturer compliance with emission standards.
90.208 Certification.
90.209 Maintenance of records.
90.210 End-of-year and final reports.
90.211 Request for hearing.

Subpart D—Emission Test Equipment Provisions

90.301 Applicability.
90.302 Definitions.
90.303 Symbols, acronyms, abbreviations.
90.304 Test equipment overview.
90.305 Dynamometer specifications and calibration accuracy.
90.306 Dynamometer torque cell calibration.
90.307 Engine cooling system.
90.308 Lubricating oil and test fuels.
90.309 Engine intake air temperature measurement.
90.310 Engine intake air humidity measurement.
90.311 Test conditions.
90.312 Analytical gases.
90.313 Analyzers required.