AUTHENTICATED
U.S. GOVERNMENT
INFORMATION
GPO

FIGURE 7 TO PART 1203—TYPICAL TEST APPARATUS FOR POSITIONAL STABILITY TEST

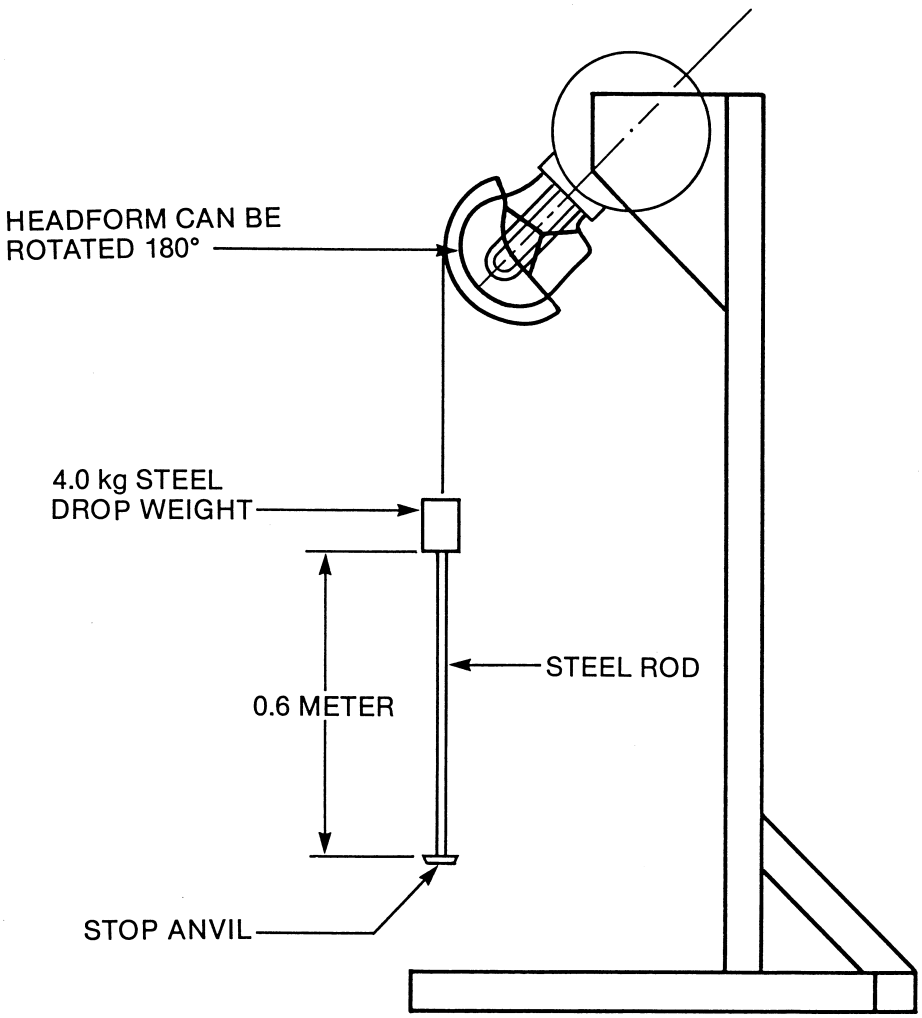

Figure 7. Typical Test Apparatus for Positional Stability Test