AUTHENTICATED
U.S. GOVERNMENT
INFORMATION
GPO

FIGURE 5 TO SUBPART A OF PART 1209—ZERO REFERENCE POINT RELATED TO DETECTING PLANE

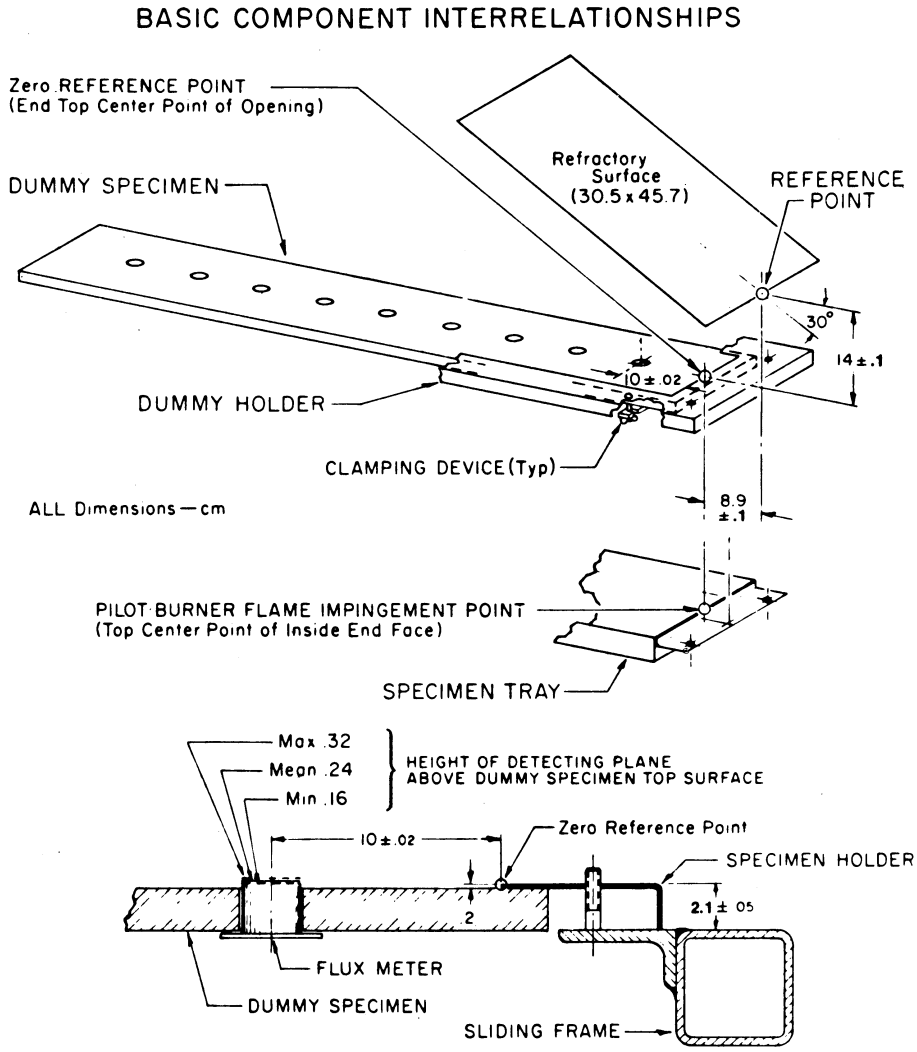

FIG 5 — ZERO REFERENCE POINT RELATED TO DETECTING PLANE