AUTHENTICATED
U.S. GOVERNMENT
INFORMATION
GPO



FIGURE 1 TO PART 1511—PACIFIER TEST FIXTURE

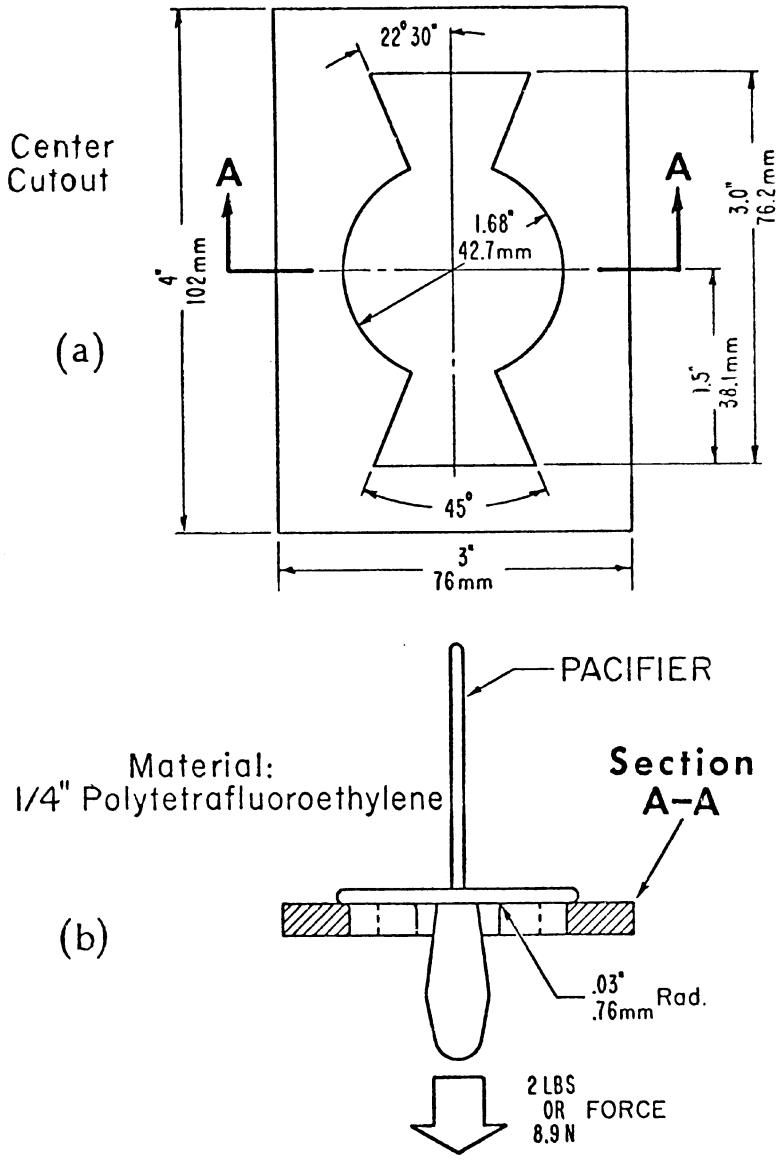


FIG 1 – PACIFIER TEST FIXTURE