AUTHENTICATED
U.S. GOVERNMENT
INFORMATION
GPO

FIGURES TO PART 1194

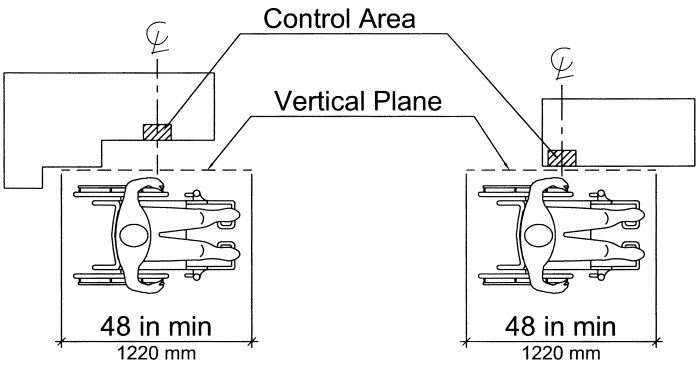

Vertical Plane Relative to the Operable Control

Figure 1

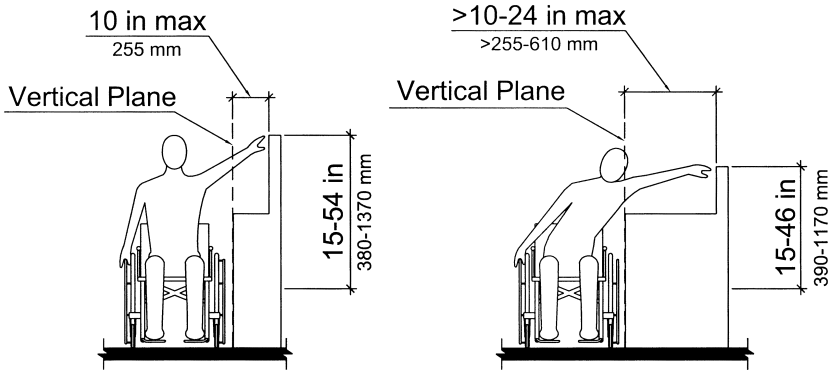

Height of Operable Control Relative to the Vertical Plane

Figure 2

PARTS 1195–1199 [RESERVED]