AUTHENTICATED
U.S. GOVERNMENT
INFORMATION
GPO

(7) Claxton, L., Houk, V.S., Monteith, L.G., Myers, L.E., Hughes, T.J., ''Assessing the use of known mutagens to calibrate the *Salmonella typhimurium* mutagenicity assay: I. Without exogenous activation.'' Mutation Research 253:137–147 (1991).

(8) Claxton, L., Houk, V.S., Warner, J.R., Myers, L.E., Hughes, T.J., ''Assessing the use of known mutagens to calibrate the *Salmonella typhimurium* mutagenicity assay: II. With exogenous activation.'' Mutation Research 253:149–159 (1991).

(9) Claxton, L., Creason, J., Lares, B., Augurell, E., Bagley, S., Bryant, D.W., Courtois, Y.A., Douglas, G., Clare, C.B., Goto, S., Quillardet, P., Jagannath, D.R., Mohn, G., Neilsen, P.A., Ohnishi, Y., Ong, T., Pederson, T.C., Shimizu, H., Nylund, L., Tokiwa, H., Vink, I.G.R., Wang, Y., Warshawsky, D., ''Results of the IPCS Collaborative Study on Complex Mixtures'' Mutation Research 276:23–32 (1992).

(10) Claxton, L., Douglas, G., Krewski, D., Lewtas, J., Matsushita, H., Rosenkranz, H., ''Overview, conclusions, and recommendations of the IPCS Collaborative Study on Complex Mixtures'' Mutation Research 276:61–80 (1992).

(11) Houk, V.S., Schalkowsky, S., and Claxton, L.D., ''Development and Validation of the Spiral Salmonella Assay: An Automated Approach to Bacterial Mutagenicity Testing'' Mutation Research 223:49–64 (1989).

(12) Jones, E., Richold, M., May, J.H., and Saje, A. ''The Assessment of the Mutagenic Potential of Vehicle Engine Exhaust in the Ames Salmonella Assay Using a Direct Exposure Method'' Mutation Research 97:35–40 (1985).

(13) Maron, D., and Ames, B. N., Revised methods for the Salmonella mutagenicity test, Mutation Research, 113:173–212 (1983).

(14) Prival, M.J., and Mitchell, V.D. ''Analysis of a method for testing azo dyes for mutagenic activity in *Salmonella typhimurium* in the presence of flavin mononucleotide and hamster liver S-9,'' Mutation Research 97:103–116 (1982).

(15) Rosenkranz, H.S., et.al. ''Nitropyrenes: Isolation, identification, and reduction of mutagenic impurities in carbon black and toners'' Science 209:1039–43 (1980).

(16) Stump, F., Snow, R., et.al., ''Trapping gaseous hydrocarbons for mutagenic testing'' SAE Technical Paper Series, No. 820776 (1982).

(17) Vogel, H.J., Bonner, D.M. ''Acetylornithinase of E. coli: partial purification and some properties,'' Journal of Biological Chemistry. 218:97–106 (1956).

[59 FR 33093, June 27, 1994, as amended at 61 FR 36513, July 11, 1996]

PART 80—REGULATION OF FUELS AND FUEL ADDITIVES

Subpart A—General Provisions

Sec.
80.1 Scope.
80.2 Definitions.
80.3 Test methods.
80.4 Right of entry; tests and inspections.
80.5 Penalties.
80.7 Requests for information.
80.8 Sampling methods for gasoline and diesel fuel.
80.9 Rounding a test result for determining conformance with a fuels standard.

Subpart B—Controls and Prohibitions

80.20–80.21 [Reserved]
80.22 Controls and prohibitions.
80.23 Liability for violations.
80.24 Controls applicable to motor vehicle manufacturers.
80.25 [Reserved]
80.26 Confidentiality of information.
80.27 Controls and prohibitions on gasoline volatility.
80.28 Liability for violations of gasoline volatility controls and prohibitions.
80.29 Controls and prohibitions on diesel fuel quality.
80.30 Liability for violations of diesel fuel control and prohibitions.
80.32 Controls applicable to liquefied petroleum gas retailers and wholesale purchaser-consumers.
80.33 Controls applicable to natural gas retailers and wholesale purchaser-consumers.

Subpart C—Oxygenated Gasoline

80.35 Labeling of retail gasoline pumps; oxygenated gasoline.
80.36–80.39 [Reserved]

Subpart D—Reformulated Gasoline

80.40 Fuel certification procedures.

80.41 Standards and requirements for compliance.
80.42 Simple emissions model.
80.43–80.44 [Reserved]
80.45 Complex emissions model.
80.46 Measurement of reformulated gasoline fuel parameters.
80.47 [Reserved]
80.48 Augmentation of the complex emission model by vehicle testing.
80.49 Fuels to be used in augmenting the complex emission model through vehicle testing.
80.50 General test procedure requirements for augmentation of the emission models.
80.51 Vehicle test procedures.
80.52 Vehicle preconditioning.
80.53–80.54 [Reserved]
80.55 Measurement methods for benzene and 1,3-butadiene.
80.56 Measurement methods for formaldehyde and acetaldehyde.
80.57–80.58 [Reserved]
80.59 General test fleet requirements for vehicle testing.
80.60 Test fleet requirements for exhaust emission testing.
80.61 [Reserved]
80.62 Vehicle test procedures to place vehicles in emitter group sub-fleets.
80.63–80.64 [Reserved]
80.65 General requirements for refiners and importers.
80.66 Calculation of reformulated gasoline properties.
80.67 Compliance on average.
80.68 Compliance surveys.
80.69 Requirements for downstream oxygenate blending.
80.70 Covered areas.
80.71 Descriptions of VOC-control regions.
80.72 Procedures for opting out of the covered areas.
80.73 Inability to produce conforming gasoline in extraordinary circumstances.
80.74 Recordkeeping requirements.
80.75 Reporting requirements.
80.76 Registration of refiners, importers or oxygenate blenders.
80.77 Product transfer documentation.
80.78 Controls and prohibitions on reformulated gasoline.
80.79 Liability for violations of the prohibited activities.
80.80 Penalties.
80.81 Enforcement exemptions for California gasoline.
80.82 Butane blending.
80.83 Renewable oxygenate requirements.
80.84 Treatment of interface and transmix.
80.85–80.89 [Reserved]

Subpart E—Anti-Dumping

80.90 Conventional gasoline baseline emissions determination.
80.91 Individual baseline determination.
80.92 Baseline auditor requirements.
80.93 Individual baseline submission and approval.
80.94 Requirements for gasoline produced at foreign refineries.
80.95–80.100 [Reserved]
80.101 Standards applicable to refiners and importers.
80.102 [Reserved]
80.103 Registration of refiners and importers.
80.104 Recordkeeping requirements.
80.105 Reporting requirements.
80.106 Product transfer documents.
80.107–80.124 [Reserved]

Subpart F—Attest Engagements

80.125 Attest engagements.
80.126 Definitions.
80.127 Sample size guidelines.
80.128 Alternative agreed upon procedures for refiners and importers.
80.129 [Reserved]
80.130 Agreed upon procedures reports.
80.131 Agreed upon procedures for GTAB, certain conventional gasoline imported by truck, previously certified gasoline used to produce gasoline, and butane blenders.
80.132 [Reserved]
80.133 Agreed-upon procedures for refiners and importers.
80.134–80.135 [Reserved]

Subpart G—Detergent Gasoline

80.140 Definitions.
80.141 Interim detergent gasoline program.
80.142–80.154 [Reserved]
80.155 Interim detergent program controls and prohibitions.
80.156 Liability for violations of the interim detergent program controls and prohibitions.
80.157 Volumetric additive reconciliation (''VAR''), equipment calibration, and recordkeeping requirements.
80.158 Product transfer documents (PTDs).
80.159 Penalties.
80.160 Exemptions.
80.161 Detergent additive certification program.
80.162 Additive compositional data.
80.163 Detergent certification options.
80.164 Certification test fuels.
80.165 Certification test procedures and standards.
80.166 Carburetor deposit control performance test and test fuel guidelines.
80.167 Confirmatory testing.
80.168 Detergent certification program controls and prohibitions.
80.169 Liability for violations of the detergent certification program controls and prohibitions.

80.170 Volumetric additive reconciliation (VAR), equipment calibration, and recordkeeping requirements.
80.171 Product transfer documents (PTDs).
80.172 Penalties.
80.173 Exemptions.
80.174 Addresses.

Subpart H—Gasoline Sulfur

GENERAL INFORMATION

80.180–80.185 [Reserved]
80.190 Who must register with EPA under the sulfur program?

GASOLINE SULFUR STANDARDS

80.195 What are the gasoline sulfur standards for refiners and importers?
80.200 What gasoline is subject to the sulfur standards and requirements?
80.205 How is the annual refinery or importer average and corporate pool average sulfur level determined?
80.210 What sulfur standards apply to gasoline downstream from refineries and importers?
80.211 What are the requirements for treating imported gasoline as blendstock?
80.212 What requirements apply to oxygenate blenders?
80.213 What alternative sulfur standards and requirements apply to transmix processors and transmix blenders?
80.214 [Reserved]

GEOGRAPHIC PHASE-IN PROGRAM

80.215 What is the scope of the geographic phase-in program?
80.216 What standards apply to gasoline produced or imported for use in the GPA?
80.217 How does a refiner or importer apply for the GPA standards?
80.218 [Reserved]
80.219 Designation and downstream requirements for GPA gasoline.
80.220 What are the downstream standards for GPA gasoline?

HARDSHIP PROVISIONS

80.225 What is the definition of a small refiner?
80.230 Who is not eligible for the hardship provisions for small refiners?
80.235 How does a refiner obtain approval as a small refiner?
80.240 What are the small refiner gasoline sulfur standards?
80.245 How does a small refiner apply for a sulfur baseline?
80.250 How is the small refiner sulfur baseline and volume determined?
80.255 Compliance plans and demonstration of commitment to produce low sulfur gasoline.
80.260 What are the procedures and requirements for obtaining a hardship extension?
80.265 How will the EPA approve or disapprove a hardship extension application?
80.270 Can a refiner seek temporary relief from the requirements of this subpart?

ALLOTMENT TRADING PROGRAM

80.271 How can a small refiner obtain an adjustment of its 2004–2007 per-gallon cap standard?
80.275 How are allotments generated and used?

AVERAGING, BANKING AND TRADING (ABT) PROGRAM—GENERAL INFORMATION

80.280 [Reserved]
80.285 Who may generate credits under the ABT program?
80.290 How does a refiner apply for a sulfur baseline?

ABT PROGRAM—BASELINE DETERMINATION

80.295 How is a refinery sulfur baseline determined?
80.300 [Reserved]

ABT PROGRAM—CREDIT GENERATION

80.305 How are credits generated during the time period 2000 through 2003?
80.310 How are credits generated beginning in 2004?

ABT PROGRAM—CREDIT USE

80.315 How are credits used and what are the limitations on credit use?
80.320–80.325 [Reserved]

SAMPLING, TESTING AND RETENTION REQUIREMENTS FOR REFINERS AND IMPORTERS

80.330 What are the sampling and testing requirements for refiners and importers?
80.335 What gasoline sample retention requirements apply to refiners and importers?
80.340 What standards and requirements apply to refiners producing gasoline by blending blendstocks into previously certified gasoline (PCG)?
80.345 [Reserved]
80.350 What alternative sulfur standards and requirements apply to importers who transport gasoline by truck?
80.355 [Reserved]

RECORDKEEPING AND REPORTING REQUIREMENTS

80.360 [Reserved]
80.365 What records must be kept?
80.370 What are the sulfur reporting requirements?
80.371–80.373 [Reserved]

EXEMPTIONS

80.374 What if a refiner or importer is unable to produce gasoline conforming to the requirements of this subpart?
80.375 What requirements apply to California gasoline?
80.380 What are the requirements for obtaining an exemption for gasoline used for research, development or testing purposes?
80.382 What requirements apply to gasoline for use in American Samoa, Guam and the Commonwealth of the Northern Mariana Islands?

VIOLATION PROVISIONS

80.385 What acts are prohibited under the gasoline sulfur program?
80.390 What evidence may be used to determine compliance with the prohibitions and requirements of this subpart and liability for violations of this subpart?
80.395 Who is liable for violations under the gasoline sulfur program?
80.400 What defenses apply to persons deemed liable for a violation of a prohibited act?
80.405 What penalties apply under this subpart?

PROVISIONS FOR FOREIGN REFINERS WITH INDIVIDUAL SULFUR BASELINES

80.410 What are the additional requirements for gasoline produced at foreign refineries having individual small refiner sulfur baselines, foreign refineries granted temporary relief under §80.270, or baselines for generating credits during 2000 through 2003?

ATTEST ENGAGEMENTS

80.415 What are the attest engagement requirements for gasoline sulfur compliance applicable to refiners and importers?

Subpart I—Motor Vehicle Diesel Fuel; Nonroad, Locomotive, and Marine Diesel Fuel; and ECA Marine Fuel

GENERAL INFORMATION

80.500 What are the implementation dates for the motor vehicle diesel fuel sulfur control program?
80.501 What fuel is subject to the provisions of this subpart?
80.502 What definitions apply for purposes of this subpart?
80.503–80.509 [Reserved]
80.510 What are the standards and marker requirements for NRLM diesel fuel and ECA marine fuel?
80.511 What are the per-gallon and marker requirements that apply to NRLM diesel fuel, ECA marine fuel, and heating oil downstream of the refiner or importer?
80.512 May an importer treat diesel fuel as blendstock?
80.513 What provisions apply to transmix processing facilities and pipelines that produce diesel fuel from pipeline interface?
80.514–80.519 [Reserved]

MOTOR VEHICLE DIESEL FUEL STANDARDS AND REQUIREMENTS

80.520 What are the standards and dye requirements for motor vehicle diesel fuel?
80.521 What are the standards and identification requirements for diesel fuel additives?
80.522 May used motor oil be dispensed into diesel motor vehicles or nonroad diesel engines?
80.523 [Reserved]
80.524 What sulfur content standard applies to motor vehicle diesel fuel downstream of the refinery or importer?
80.525 What requirements apply to kerosene blenders?
80.526 [Reserved]
80.527 Under what conditions may motor vehicle diesel fuel subject to the 15 ppm sulfur standard be downgraded to motor vehicle diesel fuel subject to the 500 ppm sulfur standard?
80.528–80.529 [Reserved]

TEMPORARY COMPLIANCE OPTION

80.530 Under what conditions can 500 ppm motor vehicle diesel fuel be produced or imported after May 31, 2006?
80.531 How are motor vehicle diesel fuel credits generated?
80.532 How are motor vehicle diesel fuel credits used and transferred?
80.533 How does a refiner or importer apply for a motor vehicle or non-highway baseline for the generation of NRLM credits or the use of the NRLM small refiner compliance options?
80.534 [Reserved]
80.535 How are NRLM diesel fuel credits generated?
80.536 How are NRLM diesel fuel credits used and transferred?
80.537–80.539 [Reserved]

GEOGRAPHIC PHASE-IN PROVISIONS

80.540 How may a refiner be approved to produce gasoline under the GPA gasoline sulfur standards in 2007 and 2008?
80.541–80.549 [Reserved]

SMALL REFINER HARDSHIP PROVISIONS

80.550 What is the definition of a motor vehicle diesel fuel small refiner or a NRLM diesel fuel small refiner under this subpart?

80.551 How does a refiner obtain approval as a small refiner under this subpart?
80.552 What compliance options are available to motor vehicle diesel fuel small refiners?
80.553 Under what conditions may the small refiner gasoline sulfur standards be extended for a small refiner of motor vehicle diesel fuel?
80.554 What compliance options are available to NRLM diesel fuel small refiners?
80.555 What provisions are available to a large refiner that acquires a small refiner or one or more of its refineries?
80.556–80.559 [Reserved]

OTHER HARDSHIP PROVISIONS

80.560 How can a refiner seek temporary relief from the requirements of this subpart in case of extreme hardship circumstances?
80.561 How can a refiner or importer seek temporary relief from the requirements of this subpart in case of extreme unforeseen circumstances?
80.562–80.569 [Reserved]

LABELING REQUIREMENTS

80.570 What labeling requirements apply to retailers and wholesale purchaser-consumers of diesel fuel beginning June 1, 2006?
80.571 What labeling requirements apply to retailers and wholesale purchaser-consumers of NRLM diesel fuel or heating oil beginning June 1, 2007?
80.572 What labeling requirements apply to retailers and wholesale purchaser-consumers of Motor Vehicle, NR, LM and NRLM diesel fuel and heating oil beginning June 1, 2010?
80.573 What labeling requirements apply to retailers and wholesale purchaser-consumers of NRLM diesel fuel and heating oil beginning June 1, 2012?
80.574 What labeling requirements apply to retailers and wholesale purchaser-consumers of ECA marine fuel beginning June 1, 2014?
80.575–80.579 [Reserved]

SAMPLING AND TESTING

80.580 What are the sampling and testing methods for sulfur?
80.581 What are the batch testing and sample retention requirements for motor vehicle diesel fuel, NRLM diesel fuel, and ECA marine fuel?
80.582 What are the sampling and testing methods for the fuel marker?
80.583 What alternative sampling and testing requirements apply to importers who transport motor vehicle diesel fuel, NRLM diesel fuel, or ECA marine fuel by truck or rail car?
80.584 What are the precision and accuracy criteria for approval of test methods for determining the sulfur content of motor vehicle diesel fuel, NRLM diesel fuel, and ECA marine fuel?
80.585 What is the process for approval of a test method for determining the sulfur content of diesel or ECA marine fuel?
80.586 What are the record retention requirements for test methods approved under this subpart?
80.587–80.589 [Reserved]

RECORDKEEPING AND REPORTING REQUIREMENTS

80.590 What are the product transfer document requirements for motor vehicle diesel fuel, NRLM diesel fuel, heating oil, ECA marine fuel, and other distillates?
80.591 What are the product transfer document requirements for additives to be used in diesel fuel?
80.592 What records must be kept by entities in the motor vehicle diesel fuel and diesel fuel additive distribution systems?
80.593 What are the reporting requirements for refiners and importers of motor vehicle diesel fuel subject to temporary refiner relief standards?
80.594 What are the pre-compliance reporting requirements for motor vehicle diesel fuel?
80.595 How does a small or GPA refiner apply for a motor vehicle diesel fuel volume baseline for the purpose of extending their gasoline sulfur standards?
80.596 How is a refinery motor vehicle diesel fuel volume baseline calculated?
80.597 What are the registration requirements?
80.598 What are the designation requirements for refiners, importers, and distributors?
80.599 How do I calculate volume balances for designation purposes?
80.600 What records must be kept for purposes of the designate and track provisions?
80.601 What are the reporting requirements for purposes of the designate and track provisions?
80.602 What records must be kept by entities in the NRLM diesel fuel, ECA marine fuel, and diesel fuel additive production, importation, and distribution systems?
80.603 What are the pre-compliance reporting requirements for NRLM diesel fuel?
80.604 What are the annual reporting requirements for refiners and importers of NRLM diesel fuel?

EXEMPTIONS

80.605 [Reserved]
80.606 What national security exemption applies to fuels covered under this subpart?

80.607 What are the requirements for obtaining an exemption for diesel fuel or ECA marine fuel used for research, development or testing purposes?
80.608 What requirements apply to diesel fuel and ECA marine fuel for use in the Territories?
80.609 [Reserved]

VIOLATION PROVISIONS

80.610 What acts are prohibited under the diesel fuel sulfur program?
80.611 What evidence may be used to determine compliance with the prohibitions and requirements of this subpart and liability for violations of this subpart?
80.612 Who is liable for violations of this subpart?
80.613 What defenses apply to persons deemed liable for a violation of a prohibited act under this subpart?
80.614 What are the alternative defense requirements in lieu of § 80.613(a)(1)(vi)?
80.615 What penalties apply under this subpart?
80.616 What are the enforcement exemptions for California diesel distributed within the State of California?
80.617 How may California diesel fuel be distributed or sold outside of the State of California?
80.618–80.619 [Reserved]

PROVISIONS FOR FOREIGN REFINERS AND IMPORTERS FOR MOTOR VEHICLE DIESEL FUEL SUBJECT TO A TEMPORARY COMPLIANCE OPTION OR HARDSHIP PROVISION

80.620 What are the additional requirements for diesel fuel or distillates produced by foreign refineries subject to a temporary refiner compliance option, hardship provisions, or motor vehicle or NRLM diesel fuel credit provisions?

Subpart J—Gasoline Toxics

GENERAL INFORMATION

80.800–80.805 [Reserved]
80.810 Who shall register with EPA under the gasoline toxics program?

GASOLINE TOXICS PERFORMANCE REQUIREMENTS

80.815 What are the gasoline toxics performance requirements for refiners and importers?
80.820 What gasoline is subject to the toxics performance requirements of this subpart?
80.825 How is the refinery or importer annual average toxics value determined?
80.830 What requirements apply to oxygenate blenders?
80.835 What requirements apply to butane blenders?
80.840 What requirements apply to transmix processors?
80.845 What requirements apply to California gasoline?
80.850 How is the compliance baseline determined?
80.855 What is the compliance baseline for refineries or importers with insufficient data?
80.860–80.905 [Reserved]

BASELINE DETERMINATION

80.910 How does a refiner or importer apply for a toxics baseline?
80.915 How are the baseline toxics value and the baseline toxics volume determined?
80.920–80.980 [Reserved]

RECORDKEEPING AND REPORTING REQUIREMENTS

80.985 What records shall be kept?
80.990 What are the toxics reporting requirements?

EXEMPTIONS

80.995 What if a refiner or importer is unable to produce gasoline conforming to the requirements of this subpart?
80.1000 What are the requirements for obtaining an exemption for gasoline used for research, development or testing purposes?

VIOLATION PROVISIONS

80.1005 What acts are prohibited under the gasoline toxics program?
80.1010 [Reserved]
80.1015 Who is liable for violations under the gasoline toxics program?
80.1020 [Reserved]
80.1025 What penalties apply under this subpart?

PROVISIONS FOR FOREIGN REFINERS WITH INDIVIDUAL TOXICS BASELINES

80.1030 What are the requirements for gasoline produced at foreign refineries having individual refiner toxics baselines?

ATTEST ENGAGEMENTS

80.1035 What are the attest engagement requirements for gasoline toxics compliance applicable to refiners and importers?
80.1040 [Reserved]

ADDITIONAL RULEMAKING

80.1045 What additional rulemaking will EPA conduct?

Subpart K—Renewable Fuel Standard

80.1100 How is the statutory default requirement for 2006 implemented?
80.1101 Definitions.

80.1102–80.1103 [Reserved]
80.1104 What are the implementation dates for the Renewable Fuel Standard Program?
80.1105 What is the Renewable Fuel Standard?
80.1106 To whom does the Renewable Volume Obligation apply?
80.1107 How is the Renewable Volume Obligation calculated?
80.1108–80.1114 [Reserved]
80.1115 How are equivalence values assigned to renewable fuel?
80.1116–80.1124 [Reserved]
80.1125 Renewable Identification Numbers (RINs).
80.1126 How are RINs generated and assigned to batches of renewable fuel by renewable fuel producers or importers?
80.1127 How are RINs used to demonstrate compliance?
80.1128 General requirements for RIN distribution.
80.1129 Requirements for separating RINs from volumes of renewable fuel.
80.1130 Requirements for exporters of renewable fuels.
80.1131 Treatment of invalid RINs.
80.1132 Reported spillage or disposal of renewable fuel.
80.1133–80.1140 [Reserved]
80.1141 Small refinery exemption.
80.1142 What are the provisions for small refiners under the RFS program?
80.1143 What are the opt-in provisions for noncontiguous states and territories?
80.1144–80.1149 [Reserved]
80.1150 What are the registration requirements under the RFS program?
80.1151 What are the recordkeeping requirements under the RFS program?
80.1152 What are the reporting requirements under the RFS program?
80.1153 What are the product transfer document (PTD) requirements for the RFS program?
80.1154 What are the provisions for renewable fuel producers and importers who produce or import less than 10,000 gallons of renewable fuel per year?
80.1155 What are the additional requirements for a producer of cellulosic biomass ethanol or waste derived ethanol?
80.1156–80.1159 [Reserved]
80.1160 What acts are prohibited under the RFS program?
80.1161 Who is liable for violations under the RFS program?
80.1162 [Reserved]
80.1163 What penalties apply under the RFS program?
80.1164 What are the attest engagement requirements under the RFS program?
80.1165 What are the additional requirements under this subpart for a foreign small refiner?
80.1166 What are the additional requirements under this subpart for a foreign producer of cellulosic biomass ethanol or waste derived ethanol?
80.1167 What are the additional requirements under this subpart for a foreign RIN owner?

Subpart L—Gasoline Benzene

80.1200–80.1219 [Reserved]

GENERAL INFORMATION

80.1220 What are the implementation dates for the gasoline benzene program?
80.1225 Who must register with EPA under the gasoline benzene program?

GASOLINE BENZENE REQUIREMENTS

80.1230 What are the gasoline benzene requirements for refiners and importers?
80.1235 What gasoline is subject to the benzene requirements of this subpart?
80.1236 What requirements apply to California gasoline?
80.1238 How is a refinery's or importer's average benzene concentration determined?
80.1240 How is a refinery's or importer's compliance with the gasoline benzene requirements of this subpart determined?

AVERAGING, BANKING AND TRADING (ABT) PROGRAM

80.1270 Who may generate benzene credits under the ABT program?
80.1275 How are early benzene credits generated?
80.1280 How are refinery benzene baselines calculated?
80.1285 How does a refiner apply for a benzene baseline?
80.1290 How are standard benzene credits generated?
80.1295 How are gasoline benzene credits used?

HARDSHIP PROVISIONS

80.1334 What are the requirements for early compliance with the gasoline benzene program?
80.1335 Can a refiner seek relief from the requirements of this subpart?
80.1336 What if a refiner or importer cannot produce gasoline conforming to the requirements of this subpart?

SMALL REFINER PROVISIONS

80.1338 What criteria must be met to qualify as a small refiner for the gasoline benzene requirements of this subpart?
80.1339 Who is not eligible for the provisions for small refiners?
80.1340 How does a refiner obtain approval as a small refiner?
80.1342 What compliance options are available to small refiners under this subpart?

80.1343 What hardship relief provisions are available only to small refiners?
80.1344 What provisions are available to a non-small refiner that acquires one or more of a small refiner's refineries?

SAMPLING, TESTING AND RETENTION REQUIREMENTS

80.1347 What are the sampling and testing requirements for refiners and importers?
80.1348 What gasoline sample retention requirements apply to refiners and importers?

RECORDKEEPING AND REPORTING REQUIREMENTS

80.1350 What records must be kept?
80.1352 What are the pre-compliance reporting requirements for the gasoline benzene program?
80.1354 What are the reporting requirements for the gasoline benzene program?

ATTEST ENGAGEMENTS

80.1356 What are the attest engagement requirements for gasoline benzene compliance?

VIOLATIONS AND PENALTIES

80.1358 What acts are prohibited under the gasoline benzene program?
80.1359 What evidence may be used to determine compliance with the prohibitions and requirements of this subpart and liability for violations of this subpart?
80.1360 Who is liable for violations under the gasoline benzene program?
80.1361 What penalties apply under the gasoline benzene program?

FOREIGN REFINERS

80.1363 What are the additional requirements under this subpart for gasoline produced at foreign refineries?

Subpart M—Renewable Fuel Standard

80.1400 Applicability.
80.1401 Definitions.
80.1402 [Reserved]
80.1403 Which fuels are not subject to the 20% GHG thresholds?
80.1404 [Reserved]
80.1405 What are the Renewable Fuel Standards?
80.1406 Who is an obligated party under the RFS program?
80.1407 How are the Renewable Volume Obligations calculated?
80.1408–80.1414 [Reserved]
80.1415 How are equivalence values assigned to renewable fuel?
80.1416 Petition process for evaluation of new renewable fuels pathways.
80.1417–80.1424 [Reserved]
80.1425 Renewable Identification Numbers (RINs).
80.1426 How are RINs generated and assigned to batches of renewable fuel by renewable fuel producers or importers?
80.1427 How are RINs used to demonstrate compliance?
80.1428 General requirements for RIN distribution.
80.1429 Requirements for separating RINs from volumes of renewable fuel.
80.1430 Requirements for exporters of renewable fuels.
80.1431 Treatment of invalid RINs.
80.1432 Reported spillage or disposal of renewable fuel.
80.1433–80.1439 [Reserved]
80.1440 What are the provisions for blenders who handle and blend less than 125,000 gallons of renewable fuel per year?
80.1441 Small refinery exemption.
80.1442 What are the provisions for small refiners under the RFS program?
80.1443 What are the opt-in provisions for noncontiguous states and territories?
80.1444–80.1448 [Reserved]
80.1449 What are the Production Outlook Report requirements?
80.1450 What are the registration requirements under the RFS program?
80.1451 What are the reporting requirements under the RFS program?
80.1452 What are the requirements related to the EPA Moderated Transaction System (EMTS)?
80.1453 What are the product transfer document (PTD) requirements for the RFS program?
80.1454 What are the recordkeeping requirements under the RFS program?
80.1455 What are the small volume provisions for renewable fuel production facilities and importers?
80.1456 What are the provisions for cellulosic biofuel waiver credits?
80.1457 Petition process for aggregate compliance approach for foreign countries.
80.1458–80.1459 [Reserved]
80.1460 What acts are prohibited under the RFS program?
80.1461 Who is liable for violations under the RFS program?
80.1462 [Reserved]
80.1463 What penalties apply under the RFS program?
80.1464 What are the attest engagement requirements under the RFS program?
80.1465 What are the additional requirements under this subpart for foreign small refiners, foreign small refineries, and importers of RFS–FRFUEL?
80.1466 What are the additional requirements under this subpart for RIN-generating foreign producers and importers of renewable fuels for which RINs have been generated by the foreign producer?

80.1467 What are the additional requirements under this subpart for a foreign RIN owner?
80.1468 Incorporation by reference.

Subpart N—Additional Requirements for Gasoline-Ethanol Blends

80.1500 Definitions.
80.1501 What are the labeling requirements that apply to retailers and wholesale purchaser-consumers of gasoline-ethanol blends that contain greater than 10.0 volume percent ethanol and not more than 15.0 volume percent ethanol?
80.1502 What are the survey requirements for gasoline-ethanol blends?
80.1503 What are the product transfer document requirements for gasoline-ethanol blends, gasolines, and conventional blendstocks for oxygenate blending subject to this subpart?
80.1504 What acts are prohibited under this subpart?
80.1505 Who is liable for violations of this subpart?
80.1506 What penalties apply under this subpart?
80.1507 What are the defenses for acts prohibited under this subpart?
80.1508 What evidence may be used to determine compliance with the requirements of this subpart and liability for violations of this subpart?
APPENDIX A TO PART 80—TEST FOR THE DETERMINATION OF PHOSPHORUS IN GASOLINE
APPENDIX B TO PART 80—TEST METHODS FOR LEAD IN GASOLINE
APPENDIXES C–G TO PART 80 [RESERVED]

AUTHORITY: 42 U.S.C. 7414, 7521, 7542, 7545, and 7601(a).

SOURCE: 38 FR 1255, Jan. 10, 1973, unless otherwise noted.

EFFECTIVE DATE NOTE: At 59 FR 7716, Feb. 16, 1994, EPA published amendments to part 80 containing information collection and recordkeeping requirements, which will not become effective until approval has been given by the Office of Management and Budget.

Subpart A—General Provisions

§ 80.1 Scope.

(a) This part prescribes regulations for the control and/or prohibition of fuels and additives for use in motor vehicles and motor vehicle engines. These regulations are based upon a determination by the Administrator that the emission product of a fuel or additive will endanger the public health, or will impair to a significant degree the performance of a motor vehicle emission control device in general use or which the Administrator finds has been developed to a point where in a reasonable time it would be in general use were such regulations promulgated; and certain other findings specified by the Act.

(b) Nothing in this part is intended to preempt the ability of State or local governments to control or prohibit any fuel or additive for use in motor vehicles and motor vehicle engines which is not explicitly regulated by this part.

[38 FR 1255, Jan. 10, 1973, as amended at 38 FR 33741, Dec. 6, 1973; 42 FR 25732, May 19, 1977]

§ 80.2 Definitions.

As used in this part:

(a) *Act* means the Clean Air Act, as amended (42 U.S.C. 1857 *et seq.*).

(b) *Administrator* means the Administrator of the Environmental Protection Agency.

(c) *Gasoline* means any fuel sold in any State[1] for use in motor vehicles and motor vehicle engines, and commonly or commercially known or sold as gasoline.

(d) *Previously certified gasoline*, or PCG, means gasoline or RBOB that previously has been included in a batch for purposes of complying with the standards in subparts D, E, H, and J of this part, as appropriate.

(e) *Lead additive* means any substance containing lead or lead compounds.

(f) *Previously designated diesel fuel* or *PDD* means diesel fuel that has been previously designated and included by a refiner or importer in a batch for purposes of complying with the standards and requirements of subpart I of this part.

(g) *Unleaded gasoline* means gasoline which is produced without the use of any lead additive and which contains not more than 0.05 gram of lead per gallon and not more than 0.005 gram of phosphorus per gallon.

(h) *Refinery* means any facility, including but not limited to, a plant, tanker truck, or vessel where gasoline

[1] *State* means a State, the District of Columbia, the Commonwealth of Puerto Rico, the Virgin Islands, Guam, American Samoa and the Commonwealth of the Northern Mariana Islands.

or diesel fuel is produced, including any facility at which blendstocks are combined to produce gasoline or diesel fuel, or at which blendstock is added to gasoline or diesel fuel.

(i) *Refiner* means any person who owns, leases, operates, controls, or supervises a refinery.

(j) *Retail outlet* means any establishment at which gasoline, diesel fuel, methanol, natural gas or liquified petroleum gas is sold or offered for sale for use in motor vehicles or nonroad engines, including locomotive engines or marine engines.

(k) *Retailer* means any person who owns, leases, operates, controls, or supervises a retail outlet.

(l) *Distributor* means any person who transports or stores or causes the transportation or storage of gasoline or diesel fuel at any point between any gasoline or diesel fuel refinery or importer's facility and any retail outlet or wholesale purchaser-consumer's facility.

(m) *Lead additive manufacturer* means any person who produces a lead additive or sells a lead additive under his own name.

(n) *Reseller* means any person who purchases gasoline or diesel fuel identified by the corporate, trade, or brand name of a refiner from such refiner or a distributor and resells or transfers it to retailers or wholesale purchaser-consumers displaying the refiner's brand, and whose assets or facilities are not substantially owned, leased, or controlled by such refiner.

(o) *Wholesale purchaser-consumer* means any person that is an ultimate consumer of gasoline, diesel fuel, methanol, natural gas, or liquified petroleum gas and which purchases or obtains gasoline, diesel fuel, natural gas or liquified petroleum gas from a supplier for use in motor vehicles or nonroad engines, including locomotive engines or marine engines and, in the case of gasoline, diesel fuel, methanol or liquified petroleum gas, receives delivery of that product into a storage tank of at least 550-gallon capacity substantially under the control of that person.

(p)–(q) [Reserved]

(r) *Importer* means a person who imports gasoline, gasoline blending stocks or components, or diesel fuel from a foreign country into the United States (including the Commonwealth of Puerto Rico, the Virgin Islands, Guam, American Samoa, and the Northern Mariana Islands).

(s) *Gasoline blending stock, blendstock, or component* means any liquid compound which is blended with other liquid compounds to produce gasoline.

(t) *Carrier* means any distributor who transports or stores or causes the transportation or storage of gasoline or diesel fuel without taking title to or otherwise having any ownership of the gasoline or diesel fuel, and without altering either the quality or quantity of the gasoline or diesel fuel.

(u) *Ethanol blending plant* means any refinery at which gasoline is produced solely through the addition of ethanol to gasoline, and at which the quality or quantity of gasoline is not altered in any other manner.

(v) *Ethanol blender* means any person who owns, leases, operates, controls, or supervises an ethanol blending plant.

(w) *Cetane index* or *''Calculated cetane index''* is a number representing the ignition properties of diesel fuel oils from API gravity and mid-boiling point as determined by ASTM standard method D 976–80, entitled ''Standard Methods for Calculated Cetane Index of Distillate Fuels''. ASTM test method D 976–80 is incorporated by reference. This incorporation by reference was approved by the Director of the Federal Register in accordance with 5 U.S.C. 552(a) and 1 CFR part 51. A copy may be obtained from the American Society for Testing and Materials, 1916 Race Street, Philadelphia, PA 19103. A copy may be inspected at the Air Docket Section (A–130), Room M–1500, U.S. Environmental Protection Agency, Docket No. A–86–03, 401 M Street SW., Washington, DC 20460 or at the National Archives and Records Administration (NARA). For information on the availability of this material at NARA, call 202–741–6030, or go to: *http://www.archives.gov/federal_register/code_of_federal_regulations/ibr_locations.html.*

(x) *Diesel fuel* means any fuel sold in any State or Territory of the United States and suitable for use in diesel engines, and that is—

(1) A distillate fuel commonly or commercially known or sold as No. 1 diesel fuel or No. 2 diesel fuel;

(2) A non-distillate fuel other than residual fuel with comparable physical and chemical properties (*e.g.*, biodiesel fuel); or

(3) A mixture of fuels meeting the criteria of paragraphs (1) and (2) of this definition.

(y) *Motor vehicle diesel fuel* means any diesel fuel or other distillate fuel that is used, intended for use, or made available for use in motor vehicles or motor vehicle engines.

(z) *Aromatic content* is the aromatic hydrocarbon content in volume percent as determined by ASTM standard test method D1319–03^{e1}, entitled, ''Standard Test Method for Hydrocarbon Types in Liquid Petroleum Products by Fluorescent Indicator Adsorption''. ASTM standard test method D1319–03^{e1}, approved November 1, 2003, is incorporated by reference. This incorporation by reference was approved by the Director of the Federal Register in accordance 5 U.S.C. 552(a) and 1 CFR part 51. Copies may be obtained from the American Society for Testing and Materials, 100 Barr Harbor Dr., West Conshohocken, PA 19428–2959, or by contacting ASTM customer service at 610–832–9585, or by contacting the e-mail address of *service@astm.org* from the ASTM Web site of *http://www.astm.org*. For further information on this test method, please contact the Environmental Protection Agency at 734–214–4582. Copies may be inspected at the Air Docket, EPA/DC, EPA West, Room B102, 1301 Constitution Ave., NW., Washington, DC, or at the National Archives and Records Administration (NARA). The telephone number for the Air Docket Public Reading Room is (202) 566–1742. For information on the availability of this material at NARA, call 202–741–6030 or go to: *http://www.archives.gov/federal_register/code_of_federal_regulations/ibr_locations.html*.

(aa) [Reserved]

(bb) *Sulfur percentage* is the percentage of sulfur in diesel fuel by weight, as determined using the applicable sampling and testing methodologies set forth in § 80.580.

(cc) *Designated Volatility Nonattainment Area* means any area designated as being in nonattainment with the National Ambient Air Quality Standard for ozone pursuant to rulemaking under section 107(d)(4)(A)(ii) of the Clean Air Act.

(dd) *Designated Volatility Attainment Area* means an area not designated as being in nonattainment with the National Ambient Air Quality Standard for ozone pursuant to rulemaking under section 107(d)(4)(A)(ii) of the Clean Air Act.

(ee) *Reformulated gasoline* means any gasoline whose formulation has been certified under § 80.40, and which meets each of the standards and requirements prescribed under § 80.41.

(ff) *Conventional gasoline* means any gasoline which has not been certified under § 80.40.

(gg) *Batch of gasoline* means a quantity of gasoline that is homogeneous with regard to those properties that are specified for conventional or reformulated gasoline.

(hh) *Covered area* means each of the geographic areas specified in § 80.70 in which only reformulated gasoline may be sold or dispensed to ultimate consumers.

(ii) *Reformulated gasoline credit* means the unit of measure for the paper transfer of benzene content resulting from reformulated gasoline which contains less than 0.95 volume percent benzene.

(jj) *Oxygenate* means any substance which, when added to gasoline, increases the oxygen content of that gasoline. Lawful use of any of the substances or any combination of these substances requires that they be ''substantially similar'' under section 211(f)(1) of the Clean Air Act, or be permitted under a waiver granted by the Administrator under the authority of section 211(f)(4) of the Clean Air Act.

(kk) *Reformulated gasoline blendstock for oxygenate blending, or RBOB* means a petroleum product which, when blended with a specified type and percentage of oxygenate, meets the definition of reformulated gasoline, and to which the specified type and percentage of oxygenate is added other than by the refiner or importer of the RBOB

at the refinery or import facility where the RBOB is produced or imported.

(ll) *Oxygenate blending facility* means any facility (including a truck) at which oxygenate is added to gasoline or blendstock, and at which the quality or quantity of gasoline is not altered in any other manner except for the addition of deposit control additives.

(mm) *Oxygenate blender* means any person who owns, leases, operates, controls, or supervises an oxygenate blending facility, or who owns or controls the blendstock or gasoline used or the gasoline produced at an oxygenate blending facility.

(nn) [Reserved]

(oo) *Liquefied petroleum gas* means a liquid hydrocarbon fuel that is stored under pressure and is composed primarily of species that are gases at atmospheric conditions (temperature = 25 °C and pressure = 1 atm), excluding natural gas.

(pp) *Control area* means a geographic area in which only oxygenated gasoline under the oxygenated gasoline program may be sold or dispensed, with boundaries determined by section 211(m) of the Act.

(qq) *Control period* means the period during which oxygenated gasoline must be sold or dispensed in any control area, pursuant to section 211(m)(2) of the Act.

(rr) *Oxygenated gasoline* means gasoline which contains a measurable amount of oxygenate.

(ss) *Tank truck* means a truck and/or trailer used to transport or cause the transportation of gasoline or diesel fuel, that meets the definition of motor vehicle in section 216(2) of the Act.

(tt) *Natural gas* means a fuel whose primary constituent is methane.

(uu) *Methanol* means any fuel sold for use in motor vehicles and commonly known or commercially sold as methanol or MXX, where XX is the percent methanol (CH_3OH) by volume.

(vv) *Opt-in area*. An area which becomes a covered area under § 80.70 pursuant to section 211(k)(6) of the Clean Air Act.

(ww) *Gasoline Treated as Blendstock, or GTAB*, means imported gasoline that is excluded from the import facility's compliance calculations, but is treated as blendstock in a related refinery that includes the GTAB in its refinery compliance calculations.

(xx) *Diesel fuel additive* means any substance not composed solely of carbon and/or hydrogen, or of diesel blendstocks, that is added to, intended to be added to, used in, or offered for use in motor vehicle diesel fuel or NRLM diesel fuel or in diesel motor vehicle or diesel NRLM engine fuel systems subsequent to the production of diesel fuel by processing crude oil from refinery processing units.

(yy)–(zz) [Reserved]

(aaa) *Distillate fuel* means diesel fuel and other petroleum fuels that can be used in engines that are designed for diesel fuel. For example, jet fuel, heating oil, kerosene, No. 4 fuel, DMX, DMA, DMB, and DMC are distillate fuels; and natural gas, LPG, gasoline, and residual fuel are not distillate fuels. Blends containing residual fuel may be distillate fuels.

(bbb) *Residual fuel* means a petroleum fuel that can only be used in diesel engines if it is preheated before injection. For example, No. 5 fuels, No. 6 fuels, and RM grade marine fuels are residual fuels. Note: Residual fuels do not necessarily require heating for storage or pumping.

(ccc) *Heating oil* means any #1, #2, or non-petroleum diesel blend that is sold for use in furnaces, boilers, and similar applications and which is commonly or commercially known or sold as heating oil, fuel oil, and similar trade names, and that is not jet fuel, kerosene, or MVNRLM diesel fuel.

(ddd) *Jet fuel* means any distillate fuel used, intended for use, or made available for use in aircraft.

(eee) *Kerosene* means any No.1 distillate fuel commonly or commercially sold as kerosene.

(fff) *#1D* means the distillate fuel classification relating to ''No. 1–D'' diesel fuels as described in ASTM D 975–04. The Director of the Federal Register approved the incorporation by reference of ASTM D 975–04, Standard Specification for Diesel Fuel Oils, as prescribed in 5 U.S.C. 552(a) and 1 CFR part 51. Anyone may purchase copies of this standard from the American Society for Testing and Materials, 100 Barr Harbor Dr., West Conshohocken, PA 19428. Anyone may inspect copies at

the U.S. EPA, Air and Radiation Docket and Information Center, 1301 Constitution Ave., NW., Room B102, EPA West Building, Washington, DC 20460 or at the National Archives and Records Administration (NARA). For information on the availability of this material at NARA, call 202–741–6030, or go to: *http://www.archives.gov/federal_register/code_of_federal_regulations/ibr_locations.html*.

(ggg) *#2D* means the distillate fuel classification relating to ''No. 2–D'' diesel fuels as described in ASTM D 975–04.

(hhh)–(jjj) [Reserved]

(kkk) *Nonroad diesel engine* means an engine that is designed to operate with diesel fuel that meets the definition of nonroad engine in 40 CFR 1068.30, including locomotive and marine diesel engines.

(lll) *Locomotive engine* means an engine used in a locomotive as defined under 40 CFR 92.2.

(mmm) *Marine engine* and *Category 3* have the meanings given under 40 CFR 94.2.

(nnn) *Nonroad, locomotive, or marine (NRLM) diesel fuel* means any diesel fuel or other distillate fuel that is used, intended for use, or made available for use, as a fuel in any nonroad diesel engines, including locomotive and marine diesel engines, except the following: Distillate fuel with a T90 at or above 700 °F that is used only in Category 2 and 3 marine engines is not NRLM diesel fuel, and ECA marine fuel is not NRLM diesel fuel (note that fuel that conforms to the requirements of NRLM diesel fuel is excluded from the definition of ''ECA marine fuel'' in this section without regard to its actual use). Use the distillation test method specified in 40 CFR 1065.1010 to determine the T90 of the fuel. NR diesel fuel and LM diesel fuel are subcategories of NRLM diesel fuel.

(1) Any diesel fuel that is sold for use in stationary engines that are required to meet the requirements of § 80.510(a) and/or (b), when such provisions are applicable to nonroad engines, shall be considered NRLM diesel fuel.

(2) [Reserved]

(ooo) *Nonroad (NR) diesel fuel* means any NRLM diesel fuel that is not ''locomotive or marine (LM) diesel fuel.''

(ppp) *Locomotive or marine (LM) diesel fuel* means any diesel fuel or other distillate fuel that is used, intended for use, or made available for use, as a fuel in locomotive or marine diesel engines, except for the following fuels:

(1) Fuel that is also used, intended for use, or made available for use in motor vehicle engines or nonroad engines other than locomotive and marine diesel engines is not LM diesel fuel.

(2) Distillate fuel with a T90 greater than 700 °F that is used only in Category 2 and 3 marine engines is not LM diesel fuel. Use the distillation test method specified in 40 CFR 1065.1010 to determine the T90 of the fuel.

(qqq) *MVNRLM diesel fuel* means any diesel fuel or other distillate fuel that meets the definition of motor vehicle (MV) or nonroad, locomotive, or marine (NRLM) diesel fuel. Motor vehicle diesel fuel, NRLM diesel fuel, NR diesel fuel, and LM diesel fuel are subcategories of MVNRLM diesel fuel.

(rrr) *Solvent yellow 124* means N-ethyl-N-[2-[1-(2-methylpropoxy)ethoxyl]-4-phenylazo]-benzeneamine.

(sss) *Non-petroleum diesel (NP diesel)* means a diesel fuel that contains at least 80 percent mono-alkyl esters of long chain fatty acids derived from vegetable oils or animal fats.

(ttt) *ECA marine fuel* is diesel, distillate, or residual fuel that meets the criteria of paragraph (ttt)(1) of this section, but not the criteria of paragraph (ttt)(2) of this section.

(1) All diesel, distillate, or residual fuel used, intended for use, or made available for use in Category 3 marine vessels while the vessels are operating within an Emission Control Area (ECA) is ECA marine fuel, unless it meets the criteria of paragraph (ttt)(2) of this section.

(2) ECA marine fuel does not include any of the following fuel:

(i) Fuel that is allowed by 40 CFR part 1043 to exceed the fuel sulfur limits for operation in an ECA (such as fuel used by excluded vessels or vessels

equipped with equivalent emission controls in conformance with 40 CFR 1043.55).

(ii) Fuel that conforms fully to the requirements of this part for NRLM diesel fuel (including being designated as NRLM).

(iii) Fuel used, or made available for use, in any diesel engines not installed on a Category 3 marine vessel.

(uuu) *Category 3 marine vessels,* for the purposes of this part 80, are vessels that are propelled by engines meeting the definition of ''Category 3'' in 40 CFR part 1042.901.

(Sec. 211, (Sec. 223, Pub. L. 95-95, 91 Stat. 764, 42 U.S.C. 7545(g)) and sec. 301(a) 42 U.S.C. 7602(a), formerly 42 U.S.C. 1857g(a)) of the Clean Air Act, as amended)

[38 FR 1255, Jan. 10, 1973]

EDITORIAL NOTE: For FEDERAL REGISTER citations affecting § 80.2, see the List of CFR Sections Affected, which appears in the Finding Aids section of the printed volume and at *www.fdsys.gov*.

§ 80.3 Test methods.

The lead and phosphorus content of gasoline shall be determined in accordance with test methods set forth in the appendices to this part.

[47 FR 765, Jan. 7, 1982]

§ 80.4 Right of entry; tests and inspections.

The Administrator or his authorized representative, upon presentation of appropriate credentials, shall have a right to enter upon or through any refinery, retail outlet, wholesale purchaser-consumer facility, or detergent manufacturer facility; or the premises or property of any gasoline or detergent distributor, carrier, or importer; or any place where gasoline or detergent is stored; and shall have the right to make inspections, take samples, obtain information and records, and conduct tests to determine compliance with the requirements of this part.

[61 FR 35356, July 5, 1996]

§ 80.5 Penalties.

Any person who violates these regulations shall be liable to the United States for a civil penalty of not more than the sum of $25,000 for every day of such violation and the amount of economic benefit or savings resulting from the violation. Any violation with respect to a regulation proscribed under section 211(c), (k), (l) or (m) of the Act which establishes a regulatory standard based upon a multi-day averaging period shall constitute a separate day of violation for each and every day in the averaging period. Civil penalties shall be assessed in accordance with section 205(b) and (c) of the Act.

[58 FR 65554, Dec. 15, 1993]

§ 80.7 Requests for information.

(a) When the Administrator, the Regional Administrator, or their delegates have reason to believe that a violation of section 211(c) or section 211(n) of the Act and the regulations thereunder has occurred, they may require any refiner, distributor, wholesale purchaser-consumer, or retailer to report the following information regarding receipt, transfer, delivery, or sale of gasoline represented to be unleaded gasoline and to allow the reproduction of such information at all reasonable times.

(1) For any bulk shipment of gasoline represented to be unleaded gasoline which is transferred, sold, or delivered within the previous 6 months by a refiner or a distributor to a distributor, wholesale purchaser-consumer or a retail outlet, the refiner or distributor shall maintain and provide the following information as applicable:

(i) Business or corporate name and address of distributors, wholesale purchaser-consumers or retail outlets to which the gasoline has been transferred, sold, or delivered.

(ii) Quantity of gasoline involved.

(iii) Date of delivery.

(iv) Storage location of gasoline prior to transit via delivery vessel (e.g., location of a bulk terminal).

(v) Business or corporate name and address of the person who delivered the gasoline.

(vi) Identification of delivery vessel (e.g., truck number). This information shall be supplied by the person in paragraph (a)(1)(v) of this section who performed the delivery, e.g., common or contract carrier.

(2) For any bulk shipment of gasoline represented to be unleaded gasoline received by a retail outlet or a wholesale-purchaser-consumer facility within the previous 6 months, whether by purchase or otherwise, the retailer or wholesale purchaser-consumer shall maintain accessibility to and provide the following information:

(i) Business or corporate name and address of the distributor.

(ii) Quantity of gasoline received.

(iii) Date of receipt.

(b) Upon request by the Administrator, the Regional Administrator, or their delegates, any retailer shall provide documentation of his annual total sales volume in gallons of gasoline for each retail outlet for each calendar year beginning with 1971.

(c) Any refiner, distributor, wholesale purchaser-consumer, retailer, or importer shall provide such other information as the Administrator or his authorized representative may reasonably require to enable him to determine whether such refiner, distributor, wholesale purchaser-consumer, retailer, or importer has acted or is acting in compliance with sections 211(c) and 211(n) of the Act and the regulations thereunder and shall, upon request of the Administrator or his authorized representative, produce and allow reproduction of any relevant records at all reasonable times. Such information may include but is not limited to records of unleaded gasoline inventory at a wholesale purchaser-consumer facility or a retail outlet, unleaded pump meter readings at a wholesale purchaser-consumer facility or a retail outlet, and receipts providing the date of acquisition of signs, labels, and nozzles required by § 80.22. No person shall be required to furnish information requested under this paragraph if he can establish that such information is not maintained in the normal course of his business.

(Secs. 211, 301, Clean Air Act, as amended (42 U.S.C. 1857f–6c, 1857g))

[40 FR 36336, Aug. 20, 1975, as amended at 42 FR 45307, Sept. 9, 1977; 47 FR 49332, Oct. 29, 1982; 61 FR 3837, Feb. 2, 1996]

§ 80.8 Sampling methods for gasoline and diesel fuel.

The sampling methods specified in this section shall be used to collect samples of gasoline and diesel fuel for purposes of determining compliance with the requirements of this part.

(a) *Manual sampling.* Manual sampling of tanks and pipelines shall be performed according to the applicable procedures specified in American Society for Testing and Materials (ASTM) method D 4057–95(2000), entitled ''Standard Practice for Manual Sampling of Petroleum and Petroleum Products.''

(b) *Automatic sampling.* Automatic sampling of petroleum products in pipelines shall be performed according to the applicable procedures specified in ASTM method D 4177–95(2000), entitled ''Standard Practice for Automatic Sampling of Petroleum and Petroleum Products.''

(c) *Sampling and sample handling for volatility measurement.* Samples to be analyzed for Reid Vapor Pressure (RVP) shall be collected and handled according to the applicable procedures in ASTM method D 5842–95(2000), entitled ''Standard Practice for Sampling and Handling of Fuels for Volatility Measurement.''

(d) *Sample compositing.* Composite samples shall be prepared using the applicable procedures in ASTM method D 5854–96(2000), entitled ''Standard Practice for Mixing and Handling of Liquid Samples of Petroleum and Petroleum Products.''

(e) *Incorporations by reference.* ASTM standard practices D 4057–95(2000), D 4177–95(2000), D 5842–95(2000), and D 5854–96(2000), are incorporated by reference. These incorporations by reference were approved by the Director of the Federal Register in accordance with 5 U.S.C. 552(a) and 1 CFR part 51. Copies may be obtained from the American Society for Testing and Materials, 100 Barr Harbor Dr., West Conshohocken, PA 19428–2959. Copies may be inspected at the Air Docket Section (LE–131), room M–1500, U.S. Environmental Protection Agency, Docket No. A–97–03, 401 M Street, SW., Washington, DC 20460, or at the National Archives and Records

Administration (NARA). For information on the availability of this material at NARA, call 202–741–6030, or go to: *http://www.archives.gov/federal_register/code_of_federal_regulations/ibr_locations.html.*

[67 FR 8736, Feb. 26, 2002]

§ 80.9 Rounding a test result for determining conformance with a fuels standard.

(a) For purposes of determining compliance with the fuel standards of 40 CFR part 80, a test result will be rounded to the nearest unit of significant digits specified in the applicable fuel standard in accordance with the rounding method described in the ASTM standard practice, ASTM E 29–02[e1], entitled, ''Standard Practice for Using Significant Digits in Test Data to Determine Conformance with Specifications''.

(b) ASTM standard practice, E 29–02[e1] is incorporated by reference. This incorporation by reference was approved by the Director of the Federal Register in accordance with 5 U.S.C. 552(a) and 1 CFR part 51. A copy may be obtained from the American Society for Testing and Materials, 100 Barr Harbor Dr., West Conshohocken, PA 19428–2959. Copies may be inspected at the Air Docket, EPA/DC, EPA West, Room B102, 1301 Constitution Ave., NW., Washington, DC, or at the National Archives and Records Administration (NARA). For information on the availability of this material at NARA, call 202–741–6030 or go to: *http://www.archives.gov/federal_register/code_of_federal_regulations/ibr_locations.html.*

[71 FR 16499, Apr. 3, 2006]

Subpart B—Controls and Prohibitions

§§ 80.20–80.21 [Reserved]

§ 80.22 Controls and prohibitions.

(a) After December 31, 1995, no person shall sell, offer for sale, supply, offer for supply, dispense, transport, or introduce into commerce gasoline represented to be unleaded gasoline unless such gasoline meets the defined requirements for unleaded gasoline in § 80.2(g); nor shall he dispense, or cause or allow the gasoline other than unleaded gasoline to be dispensed into any motor vehicle which is equipped with a gasoline tank filler inlet which is designed for the introduction of unleaded gasoline.

(b) After December 31, 1995, no person shall sell, offer for sale, supply, offer for supply, dispense, transport, or introduce into commerce for use as fuel in any motor vehicle (as defined in Section 216(2) of the Clean Air Act, 42 U.S.C. 7550(2)), any gasoline which is produced with the use of lead additives or which contains more than 0.05 gram of lead per gallon.

(c)–(e) [Reserved]

(f) Every retailer and wholesale purchaser-consumer shall equip all gasoline pumps from which gasoline is dispensed into motor vehicles with a nozzle spout that meets all the following specifications:

(1) The outside diameter of the terminal end shall not be greater than 0.840 inches (2.134 centimeters).

(2) The terminal end shall have a straight section of at least 2.5 inches (6.34 centimeters).

(3) The retaining spring shall terminate at least 3.0 inches (7.6 centimeters) from the terminal end.

(g) The specifications in this paragraph (g) apply for any new nozzle installations used primarily for dispensing gasoline into marine vessels beginning January 1, 2009. (Note that nozzles meeting the specifications of this paragraph (g) also meet the specifications of paragraph (f) of this section. Note also that the additional specifications in this paragraph (g) do not apply for nozzles used primarily for dispensing gasoline into motor vehicles rather than marine vessels.) Every retailer and wholesale purchaser-consumer shall use nozzles meeting these specifications for any new construction or for nozzle replacements. This does not require replacement of existing nozzles for refueling marine vessels before they would be replaced for other reasons. The following specifications apply to spouts on new or replacement nozzles intended for dispensing gasoline into marine vessels:

(1) The outside diameter of the terminal end shall have a diameter of 0.824 ±0.017 inches (2.093 ±0.043 centimeters).

(2) The spout shall include an aspirator hole for automatic shutoff positioned with a center that is 0.67 ±0.05 inches (1.70 ±0.13 centimeters) from the terminal end of the spout.

(3) The terminal end shall have a straight section of at least 2.5 inches (6.34 centimeters) with no holes or grooves other than the aspirator hole.

(4) The retaining spring (if applicable) shall terminate at least 3.0 inches (7.6 centimeters) from the terminal end.

(h)–(i) [Reserved]

(j) After July 1, 1996 every retailer and wholesale purchaser-consumer handling over 10,000 gallons (37,854 liters) of fuel per month shall limit each nozzle from which gasoline or methanol is introduced into motor vehicles to a maximum fuel flow rate not to exceed 10 gallons per minute (37.9 liters per minute). The flow rate may be controlled through any means in the pump/dispenser system, provided the nozzle flow rate does not exceed 10 gallons per minute (37.9 liters per minute). After January 1, 1998 this requirement applies to every retailer and wholesale purchaser-consumer. Any dispensing pump that is dedicated exclusively to heavy-duty vehicles, boats, or airplanes is exempt from this requirement.

[38 FR 1255, Jan. 10, 1973, as amended at 39 FR 16125, May 17, 1974; 39 FR 43283, Dec. 12, 1974; 48 FR 4287, Jan. 31, 1983; 56 FR 13768, Apr. 4, 1991; 58 FR 16019, Mar. 24, 1993; 61 FR 3837, Feb. 2, 1996; 61 FR 33039, June 26, 1996; 73 FR 59178, Oct. 8, 2008]

§ 80.23 Liability for violations.

Liability for violations of paragraphs (a) and (b) of § 80.22 shall be determined as follows:

(a)(1) Where the corporate, trade, or brand name of a gasoline refiner or any of its marketing subsidiaries appears on the pump stand or is displayed at the retail outlet or wholesale purchaser-consumer facility from which the gasoline was sold, dispensed, or offered for sale, the retailer or wholesale purchaser-consumer, the reseller (if any), and such gasoline refiner shall be deemed in violation. Except as provided in paragraph (b)(2) of this section, the refiner shall be deemed in violation irrespective of whether any other refiner, distributor, retailer, or wholesale purchaser-consumer or the employee or agent of any refiner, distributor, retailer, or wholesale purchaser-consumer may have caused or permitted the violation.

(2) Where the corporate, trade, or brand name of a gasoline refiner or any of its marketing subsidiaries does not appear on the pump stand and is not displayed at the retail outlet or wholesale purchaser-consumer facility from which the gasoline was sold, dispensed, or offered for sale, the retailer or wholesale purchaser-consumer and any distributor who sold that person gasoline contained in the storage tank which supplied that pump at the time of the violation shall be deemed in violation.

(b)(1) In any case in which a retailer or wholesale purchaser-consumer and any gasoline refiner or distributor would be in violation under paragraph (a) (1) or (2) of this section, the retailer or wholesale purchaser-consumer shall not be liable if he can demonstrate that the violation was not caused by him or his employee or agent.

(2) In any case in which a retailer or wholesale purchaser-consumer, a reseller (if any), and any gasoline refiner would be in violation under paragraph (a)(1) of this section, the refiner shall not be deemed in violation if he can demonstrate:

(i) That the violation was not caused by him or his employee or agent, and

(ii) That the violation was caused by an act in violation of law (other than the Act or this part), or an act of sabotage, vandalism, or deliberate commingling of gasoline which is produced with the use of lead additives or phosphorus additives with unleaded gasoline, whether or not such acts are violations of law in the jurisdiction where the violation of the requirements of this part occurred, or

(iii) That the violation was caused by the action of a reseller or a retailer supplied by such reseller, in violation of a contractual undertaking imposed by the refiner on such reseller designed to prevent such action, and despite reasonable efforts by the refiner (such as

periodic sampling) to insure compliance with such contractual obligation, or

(iv) That the violation was caused by the action of a retailer who is supplied directly by the refiner (and not by a reseller), in violation of a contractual undertaking imposed by the refiner on such retailer designed to prevent such action, and despite reasonable efforts by the refiner (such as periodic sampling) to insure compliance with such contractual obligation, or

(v) That the violation was caused by the action of a distributor subject to a contract with the refiner for transportation of gasoline from a terminal to a distributor, retailer or wholesale purchaser-consumer, in violation of a contractual undertaking imposed by the refiner on such distributor designed to prevent such action, and despite reasonable efforts by the refiner (such as periodic sampling) to insure compliance with such contractual obligation, or

(vi) That the violation was caused by a distributor (such as a common carrier) not subject to a contract with the refiner but engaged by him for transportation of gasoline from a terminal to a distributor, retailer or wholesale purchaser-consumer, despite reasonable efforts by the refiner (such as specification or inspection of equipment) to prevent such action, or

(vii) That the violation occurred at a wholesale purchaser-consumer facility: *Provided, however,* That if such wholesale purchaser-consumer was supplied by a reseller, the refiner must demonstrate that the violation could not have been prevented by such reseller's compliance with a contractual undertaking imposed by the refiner on such reseller as provided in paragraph (b)(2)(iii) of this section.

(viii) In paragraphs (b)(2)(ii) through (vi) hereof, the term ''was caused'' means that the refiner must demonstrate by reasonably specific showings by direct or circumstantial evidence that the violation was caused or must have been caused by another.

(c) In any case in which a retailer or wholesale purchaser-consumer, a reseller, and any gasoline refiner would be in violation under paragraph (a)(1) of this section, the reseller shall not be deemed in violation if he can demonstrate that the violation was not caused by him or his employee or agent.

(d) In any case in which a retailer or wholesale purchaser-consumer and any gasoline distributor would be in violation under paragraph (a)(2) of this section, the distributor will not be deemed in violation if he can demonstrate that the violation was not caused by him or his employee or agent.

(e)(1) In any case in which a retailer or his employee or agent or a wholesale purchase-consumer or his employee or agent introduced gasoline other than unleaded gasoline into a motor vehicle which is equipped with a gasoline tank filler inlet designed for the introduction of unleaded gasoline, only the retailer or wholesale purchaser-consumer shall be deemed in violation.

(2) [Reserved]

(Secs. 211, 301 of the Clean Air Act, as amended (42 U.S.C. 1857f–6c, 1857g))

[38 FR 1255, Jan. 10, 1973, as amended at 39 FR 42360, Dec. 5, 1974; 39 FR 43284, Dec. 12, 1974; 42 FR 45307, Sept. 9, 1977; 61 FR 3837, Feb. 2, 1996]

§ 80.24 Controls applicable to motor vehicle manufacturers.

(a) [Reserved]

(b) The manufacturer of any motor vehicle equipped with an emission control device which the Administrator has determined will be significantly impaired by the use of gasoline other than unleaded gasoline shall manufacture such vehicle with each gasoline tank filler inlet having a restriction which prevents the insertion of a nozzle with a spout having a terminal end with an outside diameter of 0.930 inch (2.363 centimeters) or more and allows the insertion of a nozzle with a spout meeting the specifications of § 80.22(f)(2).

(c) A motorcycle, as defined at 40 CFR 86.402 for the applicable model year, is exempt from the requirements of paragraph (b) of this section.

[38 FR 26450, Sept. 21, 1973, as amended at 39 FR 34538, Sept. 26, 1974; 46 FR 50472, Oct. 13, 1981; 48 FR 29692, June 28, 1983; 51 FR 33731, Sept. 22, 1986; 61 FR 3838, Feb. 2, 1996; 61 FR 8221, Mar. 4, 1996; 61 FR 28766, June 6, 1996; 67 FR 36771, May 24, 2002]

§ 80.25 [Reserved]

§ 80.26 Confidentiality of information.

Information obtained by the Administrator or his representatives pursuant to this part shall be treated, in so far as its confidentiality is concerned, in accordance with the provisions of 40 CFR part 2.

[38 FR 33741, Dec. 6, 1973]

§ 80.27 Controls and prohibitions on gasoline volatility.

(a)(1) *Prohibited activities in 1991.* During the 1991 regulatory control periods, no refiner, importer, distributor, reseller, carrier, retailer or wholesale purchaser-consumer shall sell, offer for sale, dispense, supply, offer for supply, or transport gasoline whose Reid vapor pressure exceeds the applicable standard. As used in this section and § 80.28, ''applicable standard'' means the standard listed in this paragraph for the geographical area and time period in which the gasoline is intended to be dispensed to motor vehicles or, if such area and time period cannot be determined, the standard listed in this paragraph that specifies the lowest Reid vapor pressure for the year in which the gasoline is being sampled. As used in this section and § 80.28, ''regulatory control periods'' mean June 1 to September 15 for retail outlets and wholesale purchaser-consumers and May 1 to September 15 for all other facilities.

APPLICABLE STANDARDS [1]

State	May	June	July	Aug.	Sept.
Alabama	10.5	10.5	9.5	9.5	10.5
Arizona:					
North of 34 degrees latitude and east of 111 degrees longitude	9.5	9.0	9.0	9.5	9.5
All areas except North of 34 degrees latitude and east of 111 degrees longitude	9.5	9.0	9.0	9.0	9.5
Arkansas	10.5	10.5	9.5	9.5	10.5
California: [2]					
North Coast	10.5	9.5	9.5	9.5	9.5
South Coast	9.5	9.5	9.5	9.5	9.5
Southeast	9.5	9.5	9.5	9.5	9.5
Interior	9.5	9.5	9.5	9.5	9.5
Colorado	10.5	9.5	9.5	9.5	9.5
Connecticut	10.5	10.5	10.5	10.5	10.5
Delaware	10.5	10.5	10.5	10.5	10.5
District of Columbia	10.5	10.5	10.5	10.5	10.5
Florida	10.5	10.5	10.5	10.5	10.5
Georgia	10.5	10.5	9.5	9.5	10.5
Idaho	10.5	10.5	10.5	10.5	10.5
Illinois:					
North of 40° Latitude	10.5	10.5	10.5	10.5	10.5
South of 40° Latitude	10.5	10.5	9.5	9.5	10.5
Indiana	10.5	10.5	10.5	10.5	10.5
Iowa	10.5	10.5	10.5	10.5	10.5
Kansas	10.5	10.5	9.5	9.5	10.5
Kentucky	10.5	10.5	10.5	10.5	10.5
Louisiana	10.5	10.5	9.5	9.5	10.5
Maine	10.5	10.5	10.5	10.5	10.5
Maryland	10.5	10.5	10.5	10.5	10.5
Massachusetts	10.5	10.5	10.5	10.5	10.5
Michigan	10.5	10.5	10.5	10.5	10.5
Minnesota	10.5	10.5	10.5	10.5	10.5
Mississippi	10.5	10.5	9.5	9.5	10.5
Missouri	10.5	10.5	9.5	9.5	10.5
Montana	10.5	10.5	10.5	10.5	10.5
Nebraska	10.5	10.5	10.5	10.5	10.5
Nevada:					
North of 38° Latitude	10.5	9.5	9.5	9.5	9.5
South of 38° Latitude	9.5	9.5	9.5	9.5	9.5
New Hampshire	10.5	10.5	10.5	10.5	10.5
New Jersey	10.5	10.5	10.5	10.5	10.5
New Mexico:					
North of 34° Latitude	9.5	9.0	9.0	9.5	9.5
South of 34° Latitude	9.5	9.0	9.0	9.0	9.5
New York	10.5	10.5	10.5	10.5	10.5
North Carolina	10.5	10.5	9.5	9.5	10.5
North Dakota	10.5	10.5	10.5	10.5	10.5

APPLICABLE STANDARDS [1]—Continued

State	May	June	July	Aug.	Sept.
Ohio	10.5	10.5	10.5	10.5	10.5
Oklahoma	10.5	9.5	9.5	9.5	9.5
Oregon:					
East of 122° Longitude	10.5	10.5	10.5	10.5	10.5
West of 122° Longitude	10.5	10.5	10.5	10.5	10.5
Pennsylvania	10.5	10.5	10.5	10.5	10.5
Rhode Island	10.5	10.5	10.5	10.5	10.5
South Carolina	10.5	10.5	9.5	9.5	10.5
South Dakota	10.5	10.5	10.5	10.5	10.5
Tennessee	10.5	10.5	9.5	9.5	10.5
Texas:					
East of 99° Longitude	9.5	9.0	9.0	9.0	9.5
West of 99° Longitude	9.5	9.0	9.0	9.0	9.5
Utah	10.5	9.5	9.5	9.5	9.5
Vermont	10.5	10.5	10.5	10.5	10.5
Virginia	10.5	10.5	10.5	10.5	10.5
Washington:					
East of 122° Longitude	10.5	10.5	10.5	10.5	10.5
West of 122° Longitude	10.5	10.5	10.5	10.5	10.5
West Virginia	10.5	10.5	10.5	10.5	10.5
Wisconsin	10.5	10.5	10.5	10.5	10.5
Wyoming	10.5	10.5	10.5	10.5	10.5

[1] Standards are expressed in pounds per square inch (psi).
[2] California areas include the following counties:
North Coast—Alameda, Contra Costa, Del Norte, Humbolt, Lake, Marin, Mendocino, Monterey, Napa, San Benito, San Francisco, San Mateo, Santa Clara, Santa Cruz, Solano, Sonoma, and Trinity.
Interior—Lassen, Modoc, Plumas, Sierra, Siskiyou, Alpine, Amador, Butte, Calaveras, Colusa, El Dorado, Fresno, Glenn, Kern (except that portion lying east of the Los Angeles County Aqueduct), Kings, Madera, Mariposa, Merced, Placer, Sacramento, San Joaquin, Shasta, Stanislaus, Sutter, Tehama, Tulare, Tuolumne, Yolo, Yuba, and Nevada.
South Coast—Orange, San Diego, San Luis Obispo, Santa Barbara, Ventura, and Los Angeles (except that portion north of the San Gabriel mountain range and east of the Los Angeles County Aqueduct).
Southeast—Imperial, Riverside, San Bernardino, Los Angeles (that portion north of the San Gabriel mountain range and east of the Los Angeles County Aqueduct), Mono, Inyo, and Kern (that portion lying east of the Los Angeles County Aqueduct).

(2) *Prohibited activities in 1992 and beyond.* During the 1992 and later high ozone seasons no person, including without limitation, no retailer or wholesale purchaser-consumer, and during the 1992 and later regulatory control periods, no refiner, importer, distributor, reseller, or carrier shall sell, offer for sale, dispense, supply, offer for supply, transport or introduce into commerce gasoline whose Reid vapor pressure exceeds the applicable standard. As used in this section and § 80.28, ''applicable standard'' means:

(i) 9.0 psi for all designated volatility attainment areas; and

(ii) The standard listed in this paragraph for the state and time period in which the gasoline is intended to be dispensed to motor vehicles for any designated volatility nonattainment area within such State or, if such area and time period cannot be determined, the standard listed in this paragraph that specifies the lowest Reid vapor pressure for the year in which the gasoline is sampled. Designated volatility attainment and designated volatility nonattainment areas and their exact boundaries are described in 40 CFR part 81, or such part as shall later be designated for that purpose. As used in this section and § 80.27, ''high ozone season'' means the period from June 1 to September 15 of any calendar year and ''regulatory control period'' means the period from May 1 to September 15 of any calendar year.

APPLICABLE STANDARDS [1] 1992 AND SUBSEQUENT YEARS

State	May	June	July	August	September
Alabama	9.0	7.8	7.8	7.8	7.8
Arizona	9.0	7.8	7.8	7.8	7.8
Arkansas	9.0	7.8	7.8	7.8	7.8
California	9.0	7.8	7.8	7.8	7.8
Colorado [2]	9.0	7.8	7.8	7.8	7.8
Connecticut	9.0	9.0	9.0	9.0	9.0
Delaware	9.0	9.0	9.0	9.0	9.0

APPLICABLE STANDARDS[1] 1992 AND SUBSEQUENT YEARS—Continued

State	May	June	July	August	September
District of Columbia	9.0	7.8	7.8	7.8	7.8
Florida	9.0	7.8	7.8	7.8	7.8
Georgia	9.0	7.8	7.8	7.8	7.8
Idaho	9.0	9.0	9.0	9.0	9.0
Illinois	9.0	9.0	9.0	9.0	9.0
Indiana	9.0	9.0	9.0	9.0	9.0
Iowa	9.0	9.0	9.0	9.0	9.0
Kansas	9.0	7.8	7.8	7.8	7.8
Kentucky	9.0	9.0	9.0	9.0	9.0
Louisiana:					
Grant Parish[4]	9.0	9.0	9.0	9.0	9.0
All other volatility nonattainment areas	9.0	7.8	7.8	7.8	7.8
Maine	9.0	9.0	9.0	9.0	9.0
Maryland	9.0	7.8	7.8	7.8	7.8
Massachusetts	9.0	9.0	9.0	9.0	9.0
Michigan	9.0	9.0	9.0	9.0	9.0
Minnesota	9.0	9.0	9.0	9.0	9.0
Mississippi	9.0	7.8	7.8	7.8	7.8
Missouri	9.0	7.8	7.8	7.8	7.8
Montana	9.0	9.0	9.0	9.0	9.0
Nebraska	9.0	9.0	9.0	9.0	9.0
Nevada	9.0	7.8	7.8	7.8	7.8
New Hampshire	9.0	9.0	9.0	9.0	9.0
New Jersey	9.0	9.0	9.0	9.0	9.0
New Mexico	9.0	7.8	7.8	7.8	7.8
New York	9.0	9.0	9.0	9.0	9.0
North Carolina	9.0	7.8	7.8	7.8	7.8
North Dakota	9.0	9.0	9.0	9.0	9.0
Ohio	9.0	9.0	9.0	9.0	9.0
Oklahoma	9.0	7.8	7.8	7.8	7.8
Oregon	9.0	7.8	7.8	7.8	7.8
Pennsylvania	9.0	9.0	9.0	9.0	9.0
Rhode Island	9.0	9.0	9.0	9.0	9.0
South Carolina[3]	9.0	9.0	9.0	9.0	9.0
South Dakota	9.0	9.0	9.0	9.0	9.0
Tennessee:.					
Knox County	9.0	9.0	9.0	9.0	9.0
All other volatility nonattainment areas	9.0	7.8	7.8	7.8	7.8
Texas	9.0	7.8	7.8	7.8	7.8
Utah	9.0	7.8	7.8	7.8	7.8
Vermont	9.0	9.0	9.0	9.0	9.0
Virginia	9.0	7.8	7.8	7.8	7.8
Washington	9.0	9.0	9.0	9.0	9.0
West Virginia	9.0	9.0	9.0	9.0	9.0
Wisconsin	9.0	9.0	9.0	9.0	9.0
Wyoming	9.0	9.0	9.0	9.0	9.0

[1] Standards are expressed in pounds per square inch (psi).
[2] The Colorado Covered Area encompasses the Denver-Boulder-Greeley-Ft. Collins-Loveland, CO, 8-hour ozone nonattainment area (*see* 40 CFR part 81).
[3] The standard for nonattainment areas in South Carolina from June 1 until September 15 in 1992 and 1993 was 7.8 psi.
[4] The standard for Grant Parish from June 1 until September 15 in 1992 through 2007 was 7.8 psi.

(b) *Determination of compliance*. Compliance with the standards listed in paragraph (a) of this section shall be determined by the use of the sampling methodologies specified in § 80.8 and the testing methodology specified in § 80.46(c).

(c) *Liability*. Liability for violations of paragraph (a) of this section shall be determined according to the provisions of § 80.28. Where the terms refiner, importer, distributor, reseller, carrier, ethanol blender, retailer, or wholesale purchaser-consumer are expressed in the singular in § 80.28, these terms shall include the plural.

(d) *Special provisions for alcohol blends*. (1) Any gasoline which meets the requirements of paragraph (d)(2) of this section shall not be in violation of this section if its Reid vapor pressure does not exceed the applicable standard in paragraph (a) of this section by more than one pound per square inch (1.0 psi).

(2) In order to qualify for the special regulatory treatment specified in paragraph (d)(1) of this section, gasoline

must contain denatured, anhydrous ethanol. The concentration of the ethanol, excluding the required denaturing agent, must be at least 9% and no more than 10% (by volume) of the gasoline. The ethanol content of the gasoline shall be determined by the use of one of the testing methodologies specified in § 80.46(g). The maximum ethanol content shall not exceed any applicable waiver conditions under section 211(f) of the Clean Air Act.

(3) Each invoice, loading ticket, bill of lading, delivery ticket and other document which accompanies a shipment of gasoline containing ethanol shall contain a legible and conspicuous statement that the gasoline being shipped contains ethanol and the percentage concentration of ethanol.

(e) *Testing exemptions.* (1)(i) Any person may request a testing exemption by submitting an application that includes all the information listed in paragraphs (e)(3), (4), (5) and (6) of this section to:

Director (6406J), Field Operations and Support Division, U.S. Environmental Protection Agency, 1200 Pennsylvania Ave., NW., Washington, DC 20460

(ii) For purposes of this section, ''testing exemption'' means an exemption from the requirements of § 80.27(a) that is granted by the Administrator for the purpose of research or emissions certification.

(2)(i) In order for a testing exemption to be granted, the applicant must demonstrate the following:

(A) The proposed test program has a purpose that constitutes an appropriate basis for exemption;

(B) The proposed test program necessitates the granting of an exemption;

(C) The proposed test program exhibits reasonableness in scope; and

(D) The proposed test program exhibits a degree of control consistent with the purpose of the program and the Environmental Protection Agency's (EPA's) monitoring requirements.

(ii) Paragraphs (e)(3), (4), (5) and (6) of this section describe what constitutes a sufficient demonstration for each of the four elements in paragraphs (e)(2)(i) (A) through (D) of this section.

(3) An appropriate purpose is limited to research or emissions certification. The testing exemption application must include a concise statement of the purpose(s) of the testing program.

(4) With respect to the necessity that an exemption be granted, the applicant must demonstrate an inability to achieve the stated purpose in a practicable manner, during a period of the year in which the volatility regulations do not apply, or without performing or causing to be performed one or more of the prohibited activities under § 80.27(a). If any site of the proposed test program is located in an area that has been classified by the Administrator as a nonattainment area for purposes of the ozone national ambient air quality standard, the application must also demonstrate an inability to perform the test program in an area that is not so classified.

(5) With respect to reasonableness, a test program must exhibit a duration of reasonable length, effect a reasonable number of vehicles or engines, and utilize a reasonable amount of high volatility fuel. In this regard, the testing exemption application must include:

(i) An estimate of the program's duration;

(ii) An estimate of the maximum number of vehicles or engines involved in the test program;

(iii) The time or mileage duration of the test program;

(iv) The range of volatility of the fuel (expressed in Reid Vapor Pressure (RVP)) expected to be used in the test program; and

(v) The quantity of fuel which exceeds the applicable standard that is expected to be used in the test program.

(6) With respect to control, a test program must be capable of affording EPA a monitoring capability. At a minimum, the testing exemption application must also include:

(i) The technical nature of the test program;

(ii) The site(s) of the test program (including the street address, city, county, State, and zip code);

(iii) The manner in which information on vehicles and engines used in the test program will be recorded and made available to the Administrator;

(iv) The manner in which results of the test program will be recorded and made available to the Administrator;

(v) The manner in which information on the fuel used in the test program (including RVP level(s), name, address, telephone number, and contact person of supplier, quantity, date received from the supplier) will be recorded and made available to the Administrator;

(vi) The manner in which the distribution pumps will be labeled to insure proper use of the test fuel;

(vii) The name, address, telephone number and title of the person(s) in the organization requesting a testing exemption from whom further information on the request may be obtained; and

(viii) The name, address, telephone number and title of the person(s) in the organization requesting a testing exemption who will be responsible for recording and making available to the Administrator the information specified in paragraphs (e)(6)(iii), (iv), and (v) of this section, and the location in which such information will be maintained.

(7) A testing exemption will be granted by the Administrator upon a demonstration that the requirements of paragraphs (e)(2), (3), (4), (5) and (6) of this section have been met. The testing exemption will be granted in the form of a memorandum of exemption signed by the applicant and the Administrator (or his delegate), which shall include such terms and conditions as the Administrator determines necessary to monitor the exemption and to carry out the purposes of this section. Any violation of such a term or condition shall cause the exemption to be void.

[54 FR 11883, Mar. 22, 1989]

EDITORIAL NOTE: For FEDERAL REGISTER citations affecting § 80.27, see the List of CFR Sections Affected, which appears in the Finding Aids section of the printed volume and at *www.fdsys.gov*.

§ 80.28 Liability for violations of gasoline volatility controls and prohibitions.

(a) *Violations at refineries or importer facilities.* Where a violation of the applicable standard set forth in § 80.27 is detected at a refinery that is not an ethanol blending plant or at an importer's facility, the refiner or importer shall be deemed in violation.

(b) *Violations at carrier facilities.* Where a violation of the applicable standard set forth in § 80.27 is detected at a carrier's facility, whether in a transport vehicle, in a storage facility, or elsewhere at the facility, the following parties shall be deemed in violation:

(1) The carrier, except as provided in paragraph (g)(1) of this section;

(2) The refiner (if he is not an ethanol blender) at whose refinery the gasoline was produced or the importer at whose import facility the gasoline was imported, except as provided in paragraph (g)(2) of this section;

(3) The ethanol blender (if any) at whose ethanol blending plant the gasoline was produced, except as provided in paragraph (g)(6) of this section; and

(4) The distributor and/or reseller, except as provided in paragraph (g)(3) of this section.

(c) *Violations at branded distributor facilities, reseller facilities, or ethanol blending plants.* Where a violation of the applicable standard set forth in § 80.27 is detected at a distributor facility, a reseller facility, or an ethanol blending plant which is operating under the corporate, trade, or brand name of a gasoline refiner or any of its marketing subsidiaries, the following parties shall be deemed in violation:

(1) The distributor or reseller, except as provided in paragraph (g)(3) or (g)(8) of this section;

(2) The carrier (if any), if the carrier caused the gasoline to violate the applicable standard;

(3) The refiner under whose corporate, trade, or brand name (or that of any of its marketing subsidiaries) the distributor, reseller, or ethanol blender is operating, except as provided in paragraph (g)(4) of this section; and

(4) The ethanol blender (if any) at whose ethanol blending plant the gasoline was produced, except as provided in paragraph (g)(6) or (g)(8) of this section.

(d) *Violations at unbranded distributor facilities or ethanol blending plants.* Where a violation of the applicable standard set forth in § 80.27 is detected at a distributor facility or an ethanol blending plant not operating under a

refiner's corporate, trade, or brand name, or that of any of its marketing subsidiaries, the following parties shall be deemcd in violation:

(1) The distributor, except as provided in paragraph (g)(3) or (g)(8) of this section;

(2) The carrier (if any), if the carrier caused the gasoline to violate the applicable standard;

(3) The refiner (if he is not an ethanol blender) at whose refinery the gasoline was produced or the importer at whose import facility the gasoline was imported, except as provided in paragraph (g)(2) of this section; and

(4) The ethanol blender (if any) at whose ethanol blending plant the gasoline was produced, except as provided in paragraph (g)(6) or (g)(8) of this section.

(e) *Violations at branded retail outlets or wholesale purchaser-consumer facilities.* Where a violation of the applicable standard set forth in § 80.27 is detected at a retail outlet or at a wholesale purchaser-consumer facility displaying the corporate, trade, or brand name of a gasoline refiner or any of its marketing subsidiaries, the following parties shall be deemed in violation:

(1) The retailer or wholesale purchaser-consumer, except as provided in paragraph (g)(5) or (g)(8) of this section;

(2) The distributor and/or reseller (if any), except as provided in paragraph (g)(3) or (g)(8) of this section;

(3) The carrier (if any), if the carrier caused the gasoline to violate the applicable standard;

(4) The refiner whose corporate, trade, or brand name (or that of any of its marketing subsidiaries) is displayed at the retail outlet or wholesale purchaser-consumer facility, except as provided in paragraph (g)(4) of this section; and

(5) The ethanol blender (if any) at whose ethanol blending plant the gasoline was produced, except as provided in paragraph (g)(6) or (g)(8) of this section.

(f) *Violations at unbranded retail outlets or wholesale purchaser-consumer facilities.* Where a violation of the applicable standard set forth in § 80.27 is detected at a retail outlet or at a wholesale purchaser-consumer facility not displaying the corporate, trade, or brand name of a refiner or any of its marketing subsidiaries, the following parties shall be deemed in violation:

(1) The retailer or wholesale purchaser-consumer, except as provided in paragraph (g)(5) or (g)(8) of this section;

(2) The distributor (if any), except as provided in paragraph (g)(3) or (g)(8) of this section;

(3) The carrier (if any), if the carrier caused the gasoline to violate the applicable standard;

(4) The ethanol blender (if any) at whose ethanol blending plant the gasoline was produced, except as provided in paragraph (g)(6) of this section; and

(5) The refiner (if he is not an ethanol blender) at whose refinery the gasoline was produced and/or the importer at whose import facility the gasoline was imported, except as provided in paragraph (g)(2) of this section.

(g) *Defenses.* (1) In any case in which a carrier would be in violation under paragraph (b)(1) of this section, the carrier shall not be deemed in violation if he can demonstrate:

(i) That the violation was not caused by him or his employee or agent; and

(ii) Evidence of an oversight program conducted by the carrier, such as periodic sampling and testing of incoming gasoline, for monitoring the volatility of gasoline stored or transported by that carrier.

(iii) An oversight program under paragraph (g)(1)(ii) of this section need not include periodic sampling and testing of gasoline in a tank truck operated by a common carrier, but in lieu of such tank truck sampling and testing, the common carrier shall demonstrate evidence of an oversight program for monitoring compliance with the volatility requirements of § 80.27 relating to the transport or storage of gasoline by tank truck, such as appropriate guidance to drivers on compliance with applicable requirements and the periodic review of records normally received in the ordinary course of business concerning gasoline quality and delivery.

(2) In any case in which a refiner or importer would be in violation under paragraphs (b)(2), (d)(3), or (f)(5) of this section, the refiner or importer shall

not be deemed in violation if he can demonstrate:

(i) That the violation was not caused by him or his employee or agent; and

(ii) Test results using the sampling methodology set forth in § 80.8 and the testing methodology set forth in § 80.46(c), or any other test method where adequate correlation to § 80.46(c) is demonstrated, which show evidence that the gasoline determined to be in violation was in compliance with the applicable standard when it was delivered to the next party in the distribution system.

(3) In any case in which a distributor or reseller would be in violation under paragraph (b)(4), (c)(1), (d)(1), (e)(2), or (f)(2) of this section, the distributor or reseller shall not be deemed in violation if he can demonstrate:

(i) That the violation was not caused by him or his employee or agent; and

(ii) Evidence of an oversight program conducted by the distributor or reseller, such as periodic sampling and testing of gasoline, for monitoring the volatility of gasoline that the distributor or reseller sells, supplies, offers for sale or supply, or transports.

(4) In any case in which a refiner would be in violation under paragraphs (c)(3) or (e)(4) of this section, the refiner shall not be deemed in violation if he can demonstrate all of the following:

(i) Test results using the sampling methodology set forth in § 80.8 and the testing methodology set forth in § 80.46(c), or any other test method where adequate correlation to § 80.46(c) is demonstrated, which show evidence that the gasoline determined to be in violation was in compliance with the applicable standard when transported from the refinery.

(ii) That the violation was not caused by him or his employee or agent; and

(iii) That the violation:

(A) Was caused by an act in violation of law (other than the Act or this part), or an act of sabotage or vandalism, whether or not such acts are violations of law in the jurisdiction where the violation of the requirements of this part occurred, or

(B) Was caused by the action of a reseller, an ethanol blender, or a retailer supplied by such reseller or ethanol blender, in violation of a contractual undertaking imposed by the refiner on such reseller or ethanol blender designed to prevent such action, and despite reasonable efforts by the refiner (such as periodic sampling and testing) to insure compliance with such contractual obligation, or

(C) Was caused by the action of a retailer who is supplied directly by the refiner (and not by a reseller), in violation of a contractual undertaking imposed by the refiner on such retailer designed to prevent such action, and despite reasonable efforts by the refiner (such as periodic sampling and testing) to insure compliance with such contractual obligation, or

(D) Was caused by the action of a distributor or an ethanol blender subject to a contract with the refiner for transportation of gasoline from a terminal to a distributor, ethanol blender, retailer or wholesale purchaser-consumer, in violation of a contractual undertaking imposed by the refiner on such distributor or ethanol blender designed to prevent such action, and despite reasonable efforts by the refiner (such as periodic sampling and testing) to insure compliance with such contractual obligation, or

(E) Was caused by a carrier or other distributor not subject to a contract with the refiner but engaged by him for transportation of gasoline from a terminal to a distributor, ethanol blender, retailer or wholesale purchaser-consumer, despite reasonable efforts by the refiner (such as specification or inspection of equipment) to prevent such action, or

(F) Occurred at a wholesale purchaser-consumer facility: *Provided, however,* That if such wholesale purchaser-consumer was supplied by a reseller or ethanol blender, the refiner must demonstrate that the violation could not have been prevented by such reseller's or ethanol blender's compliance with a contractual undertaking imposed by the refiner on such reseller or ethanol blender as provided in paragraph (g)(4)(iii)(B) of this section.

(iv) In paragraphs (g)(4)(iii)(A) through (E) of this section, the term ''was caused'' means that the refiner

must demonstrate by reasonably specific showings, by direct or circumstantial evidence, that the violation was caused or must have been caused by another.

(5) In any case in which a retailer or wholesale purchaser-consumer would be in violation under paragraphs (e)(1) or (f)(1) of this section, the retailer or wholesale purchaser-consumer shall not be deemed in violation if he can demonstrate that the violation was not caused by him or his employee or agent.

(6) In any case in which an ethanol blender would be in violation under paragraphs (b)(3), (c)(4), (d)(4), (e)(5) or (f)(4) of this section, the ethanol blender shall not be deemed in violation if he can demonstrate:

(i) That the violation was not caused by him or his employee or agent; and

(ii) Evidence of an oversight program conducted by the ethanol blender, such as periodic sampling and testing of gasoline, for monitoring the volatility of gasoline that the ethanol blender sells, supplies, offers for sale or supply or transports; and

(iii) That the gasoline determined to be in violation contained no more than 10% ethanol (by volume) when it was delivered to the next party in the distribution system.

(7) In paragraphs (g)(1)(i), (g)(2)(i), (g)(3)(i), (g)(4)(ii), (g)(5), and (g)(6)(i) of this section, the respective party must demonstrate by reasonably specific showings, by direct or circumstantial evidence, that it or its employee or agent did not cause the violation.

(8) In addition to the defenses provided in paragraphs (g)(1) through (g)(6) of this section, in any case in which an ethanol blender, distributor, reseller, carrier, retailer, or wholesale purchaser-consumer would be in violation under paragraphs (b), (c), (d), (e) or (f), of this section, as a result of gasoline which contains between 9 and 10 percent ethanol (by volume) but exceeds the applicable standard by more than one pound per square inch (1.0 psi), the ethanol blender, distributor, reseller, carrier, retailer or wholesale purchaser-consumer shall not be deemed in violation if such person can demonstrate, by showing receipt of a certification from the facility from which the gasoline was received or other evidence acceptable to the Administrator, that:

(i) The gasoline portion of the blend complies with the Reid vapor pressure limitations of § 80.27(a); and

(ii) The ethanol portion of the blend does not exceed 10 percent (by volume); and

(iii) No additional alcohol or other additive has been added to increase the Reid vapor pressure of the ethanol portion of the blend.

In the case of a violation alleged against an ethanol blender, distributor, reseller, or carrier, if the demonstration required by paragraphs (g)(8)(i), (ii), and (iii) of this section is made by a certification, it must be supported by evidence that the criteria in paragraphs (g)(8)(i), (ii), and (iii) of this section have been met, such as an oversight program conducted by or on behalf of the ethanol blender, distributor, reseller or carrier alleged to be in violation, which includes periodic sampling and testing of the gasoline or monitoring the volatility and ethanol content of the gasoline. Such certification shall be deemed sufficient evidence of compliance provided it is not contradicted by specific evidence, such as testing results, and provided that the party has no other reasonable basis to believe that the facts stated in the certification are inaccurate. In the case of a violation alleged against a retail outlet or wholesale purchaser-consumer facility, such certification shall be deemed an adequate defense for the retailer or wholesale purchaser-consumer, provided that the retailer or wholesale purchaser-consumer is able to show certificates for all of the gasoline contained in the storage tank found in violation, and, provided that the retailer or wholesale purchaser-consumer has no reasonable basis to believe that the facts stated in the certifications are inaccurate.

[54 FR 11885, Mar. 22, 1989; 54 FR 27017, June 27, 1989, as amended at 56 FR 64711, Dec. 12, 1991; 58 FR 14484, Mar. 17, 1993; 62 FR 68205, Dec. 31, 1997; 67 FR 8736, Feb. 26, 2002]

§ 80.29 Controls and prohibitions on diesel fuel quality.

(a) *Prohibited activities*. Beginning October 1, 1993 and continuing until the

implementation dates for subpart I of part 80 as specified in § 80.500, except as provided in 40 CFR 69.51, no person, including but not limited to, refiners, importers, distributors, resellers, carriers, retailers or wholesale purchaser-consumers, shall manufacture, introduce into commerce, sell, offer for sale, supply, store, dispense, offer for supply or transport any diesel fuel for use in motor vehicles, unless the diesel fuel:

(1) Has a sulfur percentage, by weight, no greater than 0.05 percent;

(2)(i) Has a cetane index of at least 40; or

(ii) Has a maximum aromatic content of 35 volume percent; and

(3) Is free of visible evidence of the dye solvent red 164; unless it is used in a manner that is tax-exempt as defined under section 4082 of the Internal Revenue Code (26 U.S.C. 4082).

(b) *Determination of compliance.* (1) Any diesel fuel which does not show visible evidence of being dyed with dye solvent red 164 (which has a characteristic red color in diesel fuel) shall be considered to be available for use in diesel motor vehicles and motor vehicle engines, and shall be subject to the prohibitions of paragraph (a) of this section.

(2) Compliance with the sulfur, cetane, and aromatics standards in paragraph (a) of this section shall be determined based on the level of the applicable component or parameter, using the sampling methodologies specified in § 80.330(b), as applicable, and the appropriate testing methodologies specified in § 80.580(a) for sulfur, § 80.2(w) for cetane index, and § 80.2(z) for aromatic content. Any evidence or information, including the exclusive use of such evidence or information, may be used to establish the level of the applicable component or parameter in the diesel fuel, if the evidence or information is relevant to whether that level would have been in compliance with the standard if the appropriate sampling and testing methodology had been correctly performed. Such evidence may be obtained from any source or location and may include, but is not limited to, test results using methods other than the compliance methods in this paragraph (b), business records, and commercial documents.

(3) Determination of compliance with the requirements of this section other than the standards described in paragraph (a) of this section, and determination of liability for any violation of this section, may be based on information obtained from any source or location. Such information may include, but is not limited to, business records and commercial documents.

(c) *Transfer documents.* (1) Any person that transfers custody or title of diesel fuel for use in motor vehicles which contains visible evidence of the dye solvent red 164 shall provide documents to the transferee which state that such fuel meets the applicable standards for sulfur and cetane index or aromatic content under these regulations and is only for tax-exempt use in diesel motor vehicles as defined under section 4082 of the Internal Revenue Code.

(2) Any person that is the transferor or the transferee of diesel fuel for use in motor vehicles which contains visible evidence of the dye solvent red 164, shall retain the documents required under paragraph (c)(1) of this section for a period of five years from the date of transfer of such fuel and shall provide such documents to the Administrator or the Administrator's representative upon request.

(d) *Liability.* Liability for violations of paragraph (a)(1) of this section shall be determined according to the provisions of § 80.30. Any person that violates paragraph (a)(2) or (c) of this section shall be liable for penalties in accordance with paragraph (e) of this section.

(e) *Penalties.* Penalties for violations of paragraph (a) or (c) of this section shall be determined according to the provisions of § 80.5.

[59 FR 35858, July 14, 1994, as amended at 63 FR 49465, Sept. 16, 1998; 66 FR 5135, Jan. 18, 2001]

§ 80.30 Liability for violations of diesel fuel control and prohibitions.

(a) *Violations at refiners or importers facilities.* Where a violation of a diesel fuel standard set forth in § 80.29 is detected at a refinery or importer's facility, the refiner or importer shall be deemed in violation.

(b) *Violations at carrier facilities.* Where a violation of a diesel fuel

standard set forth in § 80.29 is detected at a carrier's facility, whether in a transport vehicle, in a storage facility, or elsewhere at the facility, the following parties shall be deemed in violation:

(1) The carrier, except as provided in paragraph (g)(1) of this section; and

(2) The refiner or importer at whose refinery or import facility the diesel fuel was produced or imported, except as provided in paragraph (g)(2) of this section.

(c) *Violations at branded distributor or reseller facilities.* Where a violation of a diesel fuel standard set forth in § 80.29 is detected at a distributor or reseller's facility which is operating under the corporate, trade or brand name of a refiner or any of its marketing subsidiaries, the following parties shall be deemed in violation:

(1) The distributor or reseller, except as provided in paragraph (g)(3) of this section;

(2) The carrier (if any), if the carrier caused the diesel fuel to violate the standard by fuel switching, blending, mislabeling, or any other means; and

(3) The refiner under whose corporate, trade, or brand name (or that of any of its marketing subsidiaries) the distributor or reseller is operating, except as provided in paragraph (g)(4) of this section.

(d) *Violations at unbranded distributor facilities.* Where a violation of a diesel fuel standard set forth in § 80.29 is detected at the facility of a distributor not operating under a refiner's corporate, trade, or brand name, or that of any of its marketing subsidiaries, the following shall be deemed in violation:

(1) The distributor, except as provided in paragraph (g)(3) of this section;

(2) The carrier (if any), if the carrier caused the diesel fuel to violate the standard by fuel switching, blending, mislabeling, or any other means; and

(3) The refiner or importer at whose refinery or import facility the diesel fuel was produced or imported, except as provided in paragraph (g)(2) of this section.

(e) *Violations at branded retail outlets or wholesale purchaser-consumer facilities.* Where a violation of a diesel fuel standard set forth in § 80.29 is detected at a retail outlet or at a wholesale purchaser-consumer facility displaying the corporate, trade, or brand name of a refiner or any of its marketing subsidiaries, the following parties shall be deemed in violation:

(1) The retailer or wholesale purchaser-consumer, except as provided in paragraph (g)(5) of this section;

(2) The distributor and/or reseller (if any), except as provided in paragraph (g)(3) of this section;

(3) The carrier (if any), if the carrier caused the diesel fuel to violate the standard by fuel switching, blending, mislabeling, or any other means; and

(4) The refiner whose corporate, trade, or brand name, or that of any of its marketing subsidiaries, is displayed at the retail outlet or wholesale purchaser-consumer facility, except as provided in paragraph (g)(4) of this section.

(f) *Violations at unbranded retail outlets or wholesale purchaser-consumer facilities.* Where a violation of a diesel fuel standard set forth in § 80.29 is detected at a retail outlet or at a wholesale purchaser-consumer facility not displaying the corporate, trade, or brand name of a refiner or any of its marketing subsidiaries, the following parties shall be deemed in violation:

(1) The retailer or wholesale purchaser-consumer, except as provided in paragraph (g)(5) of this section;

(2) The distributor (if any), except as provided in paragraph (g)(3) of this section;

(3) The carrier (if any), if the carrier caused the diesel fuel to violate the standard by fuel switching, blending, mislabeling, or any other means; and

(4) The refiner or importer at whose refinery or import facility the diesel fuel was produced or imported, except as provided in paragraph (g)(2) of this section.

(g) *Defenses.* (1) In any case in which a carrier would be in violation under paragraph (b)(1) of this section, the carrier shall not be deemed in violation if he can demonstrate:

(i) Evidence of an oversight program conducted by the carrier, for monitoring the diesel fuel stored or transported by that carrier, such as periodic sampling and testing of the cetane

index and sulfur percentage of incoming diesel fuel. Such an oversight program need not include periodic sampling and testing of diesel fuel in a tank truck operated by a common carrier, but in lieu of such tank truck sampling and testing the common carrier shall demonstrate evidence of an oversight program for monitoring compliance with the diesel fuel requirements of § 80.29 relating to the transport or storage of diesel fuel by tank truck, such as appropriate guidance to drivers on compliance with applicable requirements and the periodic review of records normally received in the ordinary course of business concerning diesel fuel quality and delivery; and

(ii) That the violation was not caused by the carrier or his employee or agent.

(2) In any case in which a refiner or importer would be in violation under paragraphs (b)(2), (d)(3), or (f)(4) of this section, the refiner or importer shall not be deemed in violation if he can demonstrate:

(i) That the violation was not caused by him or his employee or agent; and

(ii) Test results, performed in accordance with the applicable sampling and testing methodologies set forth in §§ 80.2(w), 80.2(z), 80.2(bb), and 80.580, which evidence that the diesel fuel determined to be in violation was in compliance with the diesel fuel standards of § 80.29(a) when it was delivered to the next party in the distribution system;

(3) In any case in which a distributor or reseller would be in violation under paragraphs (c)(1), (d)(1), (e)(2) or (f)(2) of this section, the distributor or reseller shall not be deemed in violation if he can demonstrate:

(i) That the violation was not caused by him or his employee or agent; and

(ii) Evidence of an oversight program conducted by the distributor or reseller, such as periodic sampling and testing of diesel fuel, for monitoring the sulfur percentage and cetane index of the diesel fuel that the distributor or reseller sells, supplies, offers for sale or supply, or transports.

(4) In any case in which a refiner would be in violation under paragraphs (c)(3) or (e)(4) of this section, the refiner shall not be deemed in violation if he can demonstrate all of the following:

(i) Test results, performed in accordance with the applicable sampling and testing methodologies set forth in §§ 80.2(w), 80.2(z), 80.2(bb), and 80.580, which evidence that the diesel fuel determined to be in violation was in compliance with the diesel fuel standards of § 80.29(a) when it was delivered to the next party in the distribution system;

(ii) That the violation was not caused by him or his employee or agent; and

(iii) That the violation:

(A) Was caused by an act in violation of law (other than the Act or this part), or an act of sabotage or vandalism, whether or not such acts are violations of law in the jurisdiction where the violation of the requirements of this part occurred, or

(B) Was caused by the action of a reseller or a retailer supplied by such reseller, in violation of a contractual undertaking imposed by the refiner on such reseller designed to prevent such action, and despite reasonable efforts by the refiner (such as periodic sampling and testing) to insure compliance with such contractual obligation, or

(C) Was caused by the action of a retailer who is supplied directly by the refiner (and not by a reseller), in violation of a contractual undertaking imposed by the refiner on such retailer designed to prevent such action, and despite reasonable efforts by the refiner (such as periodic sampling and testing) to insure compliance with such contractual obligation, or

(D) Was caused by the action of a distributor subject to a contract with the refiner for transportation of diesel fuel from a terminal to a distributor, retailer or wholesale purchaser-consumer, in violation of a contractual undertaking imposed by the refiner on such distributor designed to prevent such action, and despite reasonable efforts by the refiner (such as periodic sampling and testing) to ensure compliance with such contractual obligation, or

(E) Was caused by a carrier or other distributor not subject to a contract with the refiner but engaged by him for transportation of diesel fuel from a terminal to a distributor, retailer or wholesale purchaser-consumer, despite

reasonable efforts by the refiner (such as specification or inspection of equipment) to prevent such action, or

(F) Occurred at a wholesale purchaser-consumer facility: *Provided, however,* That if such wholesale purchaser-consumer was supplied by a reseller, the refiner must demonstrate that the violation could not have been prevented by such reseller's compliance with a contractual undertaking imposed by the refiner on such reseller as provided in paragraph (g)(4)(iii)(B) of this section.

(iv) In paragraphs (g)(4)(iii) (A) through (E) of this section, the term *was caused* means that the refiner must demonstrate by reasonably specific showings, by direct or circumstantial evidence, that the violation was caused or must have been caused by another.

(5) In any case in which a retailer or wholesale purchaser-consumer would be in violation under paragraphs (e)(1) or (f)(1) of this section, the retailer or wholesale purchaser-consumer shall not be deemed in violation if he can demonstrate that the violation was not caused by him or his employee or agent.

(6) In paragraphs (g)(1)(iii), (g)(2)(i), (g)(3)(i), (g)(4)(ii) and (g)(5) of this section, the respective party must demonstrate by reasonably specific showings, by direct or circumstantial evidence, that it or its employee or agent did not cause the violation.

(7) In the case of any distributor or reseller that would be in violation under paragraph (e)(2) or (f)(2) of this section or any wholesale purchaser-consumer or retailer that would be in violation under paragraph (e)(1) or (f)(1) of this section for diesel fuel for use in motor vehicles which contains visible evidence of the dye solvent red 164, the distributor or reseller or wholesale purchaser-consumer or retailer shall not be deemed in violation if he can:

(i) Demonstrate that the violation was not caused by him or his employee or agent,

(ii) Demonstrate that the fuel has been supplied, offered for supply, transported or available for tax-exempt use as defined under section 4082 of the Internal Revenue Code, and

(iii) Provide evidence from the supplier in the form of documentation that the fuel met the applicable standards under paragraph (a)(1) of this section for sulfur and cetane index or aromatics content for use in motor vehicles.

(h) *Detection of violations.* In paragraphs (a) through (f) of this section, the term ''is detected at'' means that the violation existed at the facility in question, and the existence of the violation at that facility may be established through evidence obtained or created at that facility, at any other location, and by any party.

[55 FR 34138, Aug. 21, 1990, as amended at 59 FR 35859, July 14, 1994; 62 FR 68205, Dec. 31, 1997; 66 FR 5135, Jan. 18, 2001]

§ 80.32 Controls applicable to liquefied petroleum gas retailers and wholesale purchaser-consumers.

After January 1, 1998 every retailer and wholesale purchaser- consumer handling over 13,660 gallons of liquefied petroleum gas per month shall equip each pump from which liquefied petroleum gas is introduced into motor vehicles with a nozzle that has no greater than 2.0 cm^3 dead space from which liquefied petroleum gas will be released upon nozzle disconnect from the vehicle, as measured from the nozzle face which seals against the vehicle receptacle ''O'' ring, and as determined by calculation of the geometric shape of the nozzle. After January 1, 2000 this requirement applies to every liquefied petroleum gas retailer and wholesale purchaser- consumer. Any dispensing pump shown to be dedicated to heavy-duty vehicles is exempt from this requirement.

[59 FR 48490, Sept. 21, 1994]

§ 80.33 Controls applicable to natural gas retailers and wholesale purchaser-consumers.

(a) After January 1, 1998 every retailer and wholesale purchaser-consumer handling over 1,215,000 standard cubic feet of natural gas per month shall equip each pump from which natural gas is introduced into natural gas motor vehicles with a nozzle and hose configuration which vents no more than 1.2 grams of natural gas to the atmosphere per refueling of a vehicle

complying with § 86.098–8(d)(1)(iv) of this chapter, as determined by calculation of the geometric shape of the nozzle and hose. After January 1, 2000 this requirement applies to every natural gas retailer and wholesale purchaser-consumer. Any dispensing pump shown to be dedicated to heavy-duty vehicles is exempt from this requirement.

(b) The provisions of paragraph (a) of this section can be waived for refueling stations which were in operation on or before January 1, 1998 provided the station operator can demonstrate, to the satisfaction of the Administrator, that compliance with paragraph (a) of this section would require additional compression equipment or other modifications with costs similar to or greater than the cost of additional compression equipment.

[59 FR 48490, Sept. 21, 1994]

Subpart C—Oxygenated Gasoline

§ 80.35 Labeling of retail gasoline pumps; oxygenated gasoline.

(a) For oxygenated gasoline programs with a minimum oxygen content per gallon or minimum oxygen content requirement in conjunction with a credit program, the following shall apply:

(1) Each gasoline pump stand from which oxygenated gasoline is dispensed at a retail outlet in the control area shall be affixed during the control period with a legible and conspicuous label which contains the following statement:

The gasoline dispensed from this pump is oxygenated and will reduce carbon monoxide pollution from motor vehicles.

(2) The posting of the above statement shall be in block letters of no less than 20-point bold type; in a color contrasting with the intended background. The label shall be placed on the vertical surface of the pump on each side with gallonage and price meters and shall be on the upper two-thirds of the pump, clearly readable to the public.

(3) The retailer shall be responsible for compliance with the labeling requirements of this section.

(b) For oxygenated gasoline programs with a credit program and no minimum oxygen content requirement, the following shall apply:

(1) Each gasoline pump stand from which oxygenated gasoline is dispensed at a retail outlet in the control area shall be affixed during the control period with a legible and conspicuous label which contains the following statement:

The fuel dispensed from this pump meets the requirements of the Clean Air Act as part of a program to reduce carbon monoxide pollution from motor vehicles.

(2) The posting of the above statement shall be in block letters of no less than 20-point bold type; in a color contrasting with the intended background. The label shall be placed on the vertical surface of the pump on each side with gallonage and price meters and shall be on the upper two-thirds of the pump, clearly readable to the public.

(3) The retailer shall be responsible for compliance with the labeling requirements of this section.

[57 FR 47771, Oct. 20, 1992]

§§ 80.36–80.39 [Reserved]

Subpart D—Reformulated Gasoline

SOURCE: 59 FR 7813, Feb. 16, 1994, unless otherwise noted.

§ 80.40 Fuel certification procedures.

(a) Gasoline that complies with one of the standards specified in § 80.41 (a) through (f) that is relevant for the gasoline, and that meets all other relevant requirements prescribed under § 80.41, shall be deemed certified.

(b) Any refiner or importer may, with regard to a specific fuel formulation, request from the Administrator a certification that the formulation meets one of the standards specified in § 80.41 (a) through (f).

(c)(1) Adjusted VOC gasoline for purposes of the general requirements in 80.65(d)(2)(ii), and the certification procedures in this section is gasoline that contains 10 to 15 volume percent ethanol, or RBOB intended for blending with 10 to 15 volume percent ethanol,

that is intended for use in the areas described at 80.70(f) and (i), and is designated by the refiner as adjusted VOC gasoline subject to less stringent VOC standards in 80.41(e) and (f). In order for adjusted VOC gasoline to qualify for the regulatory treatment specified in 80.41(e) and (f), reformulated gasoline must contain denatured, anhydrous ethanol. The concentration of the ethanol, excluding the required denaturing agent, must be at least 9 percent and no more than 15 percent (by volume) of the gasoline. The ethanol content of the gasoline shall be determined by use of one of the testing methodologies specified in 80.46(g).

(2) Refiners may choose not to designate as adjusted VOC gasoline or RBOB that otherwise meets the requirements of paragraph (c)(1) of this section, in which case the more stringent VOC standards in § 80.41 apply.

(3) For purposes of § 80.78(a)(1)(v), the ''Adjusted VOC gasoline'' standards under § 80.41 are the applicable VOC emissions performance standards only for adjusted VOC gasoline that is intended for use in or sold for use by an ultimate consumer in the covered areas described at § 80.70(f) and (i). For purposes of § 80.78(a)(1)(v), gasoline designated as adjusted VOC gasoline that is intended for use or that is sold for use by an ultimate consumer in any covered area in VOC-Control Region 2 other than those described at § 80.70(f) and (i), is subject to the VOC performance standards in § 80.41 applicable to all other gasoline designated for VOC-Control Region 2.

[59 FR 7813, Feb. 16, 1994, as amended at 66 FR 37164, July 17, 2001; 67 FR 8736, Feb. 26, 2002; 76 FR 44443, July 25, 2011]

§ 80.41 Standards and requirements for compliance.

(a) *Simple model per-gallon standards.* The ''simple model'' standards for compliance when achieved on a per-gallon basis are as follows:

SIMPLE MODEL PER-GALLON STANDARDS

Reid vapor pressure (in pounds per square inch):	
Gasoline designated for VOC-Control Region 1	≤7.2
Gasoline designated for VOC-Control Region 2	≤8.1
Oxygen content (percent, by weight)	≥2.0
Toxic air pollutants emissions reduction (percent)	≥15.0
Benzene (percent, by volume)	≤1.00

(b) *Simple model averaged standards.* The ''simple model'' standards when achieved on average are as follows:

SIMPLE MODEL AVERAGED STANDARDS

Reid vapor pressure (in pounds per square inch):	
Gasoline designated for VOC-Control Region 1:	
Standard	≤7.1
Per-Gallon Maximum	≤7.4
Gasoline designated for VOC-Control Region 2:	
Standard	≤8.0
Per-Gallon Maximum	≤8.3
Oxygen content (percent, by weight):	
Standard	≥2.1
Per-Gallon Minimum	≥1.5
Toxic air pollutants emissions reduction (percent)	≥16.5
Benzene (percent, by volume):	
Standard	≤0.95
Per-Gallon Maximum	≤1.30

(c) *Phase I complex model per gallon standards.* The Phase I ''complex model'' standards for compliance when achieved on a per-gallon basis are as follows:

PHASE I—COMPLEX MODEL PER-GALLON STANDARDS

VOC emissions performance reduction (percent):	
Gasoline designated for VOC-Control Region 1	≥35.1
Gasoline designated for VOC-Control Region 2	≥15.6
Toxic air pollutants emissions performance reduction (percent)	≥15.0
NO_X emissions performance reduction (percent)	≥0.0
Oxygen content (percent, by weight)	≥2.0
Benzene (percent, by volume)	≤1.00

(d) *Phase I complex model averaged standards.* The Phase I ''complex model'' standards for compliance when achieved on average are as follows:

PHASE I COMPLEX MODEL AVERAGED STANDARDS

VOC emissions performance reduction (percent)	
Gasoline designated for VOC-Control Region 1:	
Standard	≥36.6
Per-Gallon Minimum	≥32.6
Gasoline designated for VOC-Control Region 2:	
Standard	≥17.1
Per-Gallon Minimum	≥13.1
Toxics air pollutants emissions performance reduction (percent)	≥16.5
NO_X emissions performance reduction (percent)	≥1.5
Oxygen content (percent, by weight):	
Standard	≥2.1
Per-Gallon Minimum	≥1.5
Benzene (percent, by volume):	
Standard	≤0.95
Per-Gallon Maximum	≤1.30

(e)(1) *Phase II complex model per-gallon standards.* The Phase II ''complex model'' standards for compliance when

achieved on a per-gallon basis are as follows:

PHASE II—COMPLEX MODEL PER-GALLON STANDARDS

VOC emissions performance reduction (percent):	
Gasoline designated for VOC-Control Region 1	≥27.5
Adjusted VOC gasoline designated for VOC-Control Region 2	≥23.9
All other gasoline designated for VOC-Control Region 2	≥25.9
Toxic air pollutants emissions performance reduction (percent)	≥20.0
NO_X emissions performance reduction (percent):	
Gasoline designated as VOC-controlled	≥5.5
Gasoline not designated as VOC-controlled	≥0.0
Benzene (percent, by volume)	≤1.00

(2)(i) The NO_X emissions performance reduction specified in paragraph (e)(1) of this section shall no longer apply beginning January 1, 2007, except as provided in paragraph (e)(2)(ii) of this section.

(ii) For a refiner subject to the small refiner gasoline sulfur standards at § 80.240, the NO_X emissions performance reduction specified in paragraph (e)(1) of this section shall no longer apply beginning January 1, 2008. For a refiner subject to the gasoline sulfur standards at § 80.240 that has received an extension of its small refiner gasoline sulfur standards under § 80.553, the NO_X emissions performance reduction specified in paragraph (e)(1) of this section shall no longer apply beginning January 1, 2011.

(3)(i) Beginning January 1, 2011, or January 1, 2015 for small refiners approved under § 80.1340, the toxic air pollutants emissions performance reduction and benzene content specified in paragraph (e)(1) of this section shall apply to reformulated gasoline that is not subject to the benzene standard of § 80.1230, pursuant to the provisions of § 80.1235.

(ii) The toxic air pollutants emissions performance reduction and benzene content specified in paragraph (e)(1) of this section shall not apply to reformulated gasoline produced by a refinery approved under § 80.1334, pursuant to § 80.1334(c).

(f)(1) *Phase II complex model averaged standards.* The Phase II ''complex model'' standards for compliance when achieved on average are as follows:

PHASE II COMPLEX MODEL AVERAGED STANDARDS

VOC emissions performance reduction (percent):	
Gasoline designated for VOC-Control Region 1	
Standard	≥29.0
Per-Gallon Minimum	≥25.0
Adjusted VOC gasoline designated for VOC-Control Region 2	
Standard	≥25.4
Per-Gallon Minimum	≥21.4
All other gasoline designated for VOC-Control Region 2	
Standard	≥27.4
Per-Gallon Minimum	≥23.4
Toxic air pollutants emissions performance reduction (percent)	≥21.5
NO_X emissions performance reduction (percent):	
Gasoline designated as VOC-controlled	≥6.8
Gasoline not designated as VOC-controlled	≥1.5
Benzene (percent, by volume):	
Standard	≤0.95
Per-Gallon Maximum	≤1.30

(2)(i) The NO_X emissions performance reduction specified in paragraph (f)(1) of this section shall no longer apply beginning January 1, 2007, except as provided in paragraph (f)(2)(ii) of this section.

(ii) For a refiner subject to the small refiner gasoline sulfur standards at § 80.240, the NO_X emissions performance reduction specified in paragraph (f)(1) of this section shall no longer apply beginning January 1, 2008. For a refiner subject to the gasoline sulfur standards at § 80.240 that has received an extension of its small refiner gasoline sulfur standards under § 80.553, the NO_X emissions performance reduction specified in paragraph (f)(1) of this section shall no longer apply beginning January 1, 2011.

(3)(i) Beginning January 1, 2011, or January 1, 2015 for small refiners approved under § 80.1340, the toxic air pollutants emissions performance reduction and benzene content specified in paragraph (f)(1) of this section shall apply only to reformulated gasoline that is not subject to the benzene standard of § 80.1230, pursuant to the provisions of § 80.1235.

(ii) The toxic air pollutants emissions performance reduction and benzene content specified in paragraph (f)(1) of this section shall not apply to reformulated gasoline produced by a refinery approved under § 80.1334, pursuant to § 80.1334(c).

(g) *Oxygen maximum standard.* (1) The per-gallon standard for maximum oxygen content, which applies to reformulated gasoline subject to the simple model per-gallon or average standards, is as follows:

(i) Oxygen content shall not exceed 3.2 percent by weight from ethanol within the boundaries of any State if the State notifies the Administrator that the use of an oxygenate will interfere with attainment or maintenance of an ambient air quality standard or will contribute to an air quality problem.

(ii) A State may request the standard specified in paragraph (g)(1)(i) of this section separately for reformulated gasoline designated as VOC-controlled and reformulated gasoline not designated as VOC-controlled.

(2) The standard in paragraph (g)(1)(i) of this section shall apply 60 days after the Administrator publishes a notice in the FEDERAL REGISTER announcing such a standard.

(h) *Additional standard requirements.* In addition to the standards specified in paragraphs (a) through (g) of this section, the following standards apply for all reformulated gasoline:

(1) The standard for heavy metals, including lead or manganese, on a per-gallon basis, is that reformulated gasoline may contain no heavy metals. The Administrator may waive this prohibition for a heavy metal (other than lead) if the Administrator determines that addition of the heavy metal to the gasoline will not increase, on an aggregate mass or cancer-risk basis, toxic air pollutant emissions from motor vehicles.

(2) In the case of any refinery or importer subject to the simple model standards:

(i) The annual average levels for sulfur, T–90, and olefins cannot exceed that refinery's or importer's 1990 baseline levels for each of these parameters; and

(ii) The 1990 baseline levels and the annual averages for these parameters shall be established using the methodology set forth in §§ 80.91 through 80.92; and

(iii) In the case of a refiner that operates more than one refinery, the standards specified under this paragraph (h)(2) shall be met using the refinery grouping selected by the refiner under § 80.101(h).

(i) *Use of simple and complex models.* (1) During each calendar year 1995 through 1997, any refinery or importer shall be subject to either the simple model standards specified in paragraphs (a) and (b) of this section, or the Phase I complex model standards specified in paragraphs (c) and (d) of this section, at the option of the refiner or importer, provided that:

(i) No refinery or importer may be subject to a combination of simple and complex standards during any calendar year; and

(ii) Any refiner or importer that elects to achieve compliance with the anti-dumping requirements using the:

(A) Simple model shall meet the requirements of this subpart D using the simple model standards; or

(B) Complex model or optional complex model shall meet the requirements of this subpart D using the complex model standards.

(2) During the period January 1, 1998 through December 31, 1999, any refiner or importer shall be subject to the Phase I complex model standards specified in paragraphs (c) and (d) of this section.

(3) Beginning on January 1, 2000, any refiner or importer shall be subject to the Phase II complex model standards specified in paragraphs (e) and (f) of this section.

(j) *Complex model early use.* Before January 1, 1998, the VOC, toxics, and NO_X emissions performance standards for any refinery or importer subject to the Phase I complex model standards shall be determined by evaluating all of the following parameter levels in the Phase I complex model (specified in § 80.45) at one time:

(1) The simple model values for benzene, RVP, and oxygen specified in § 80.41 (a) or (b), as applicable;

(2) The aromatics value which, together with the values for benzene, RVP, and oxygen determined under paragraph (j)(1) of this section, meets the Simple Model toxics requirement specified in paragraph (a) or (b) of this section, as applicable;

(3) The refinery's or importer's individual baseline values for sulfur, E–300,

and olefins, as established under §80.91; and

(4) The appropriate seasonal value of E–200 specified in §80.45(b)(2).

(k) *Effect of VOC survey failure.* (1) On each occasion during 1995 or 1996 that a covered area fails a simple model VOC emissions reduction survey conducted pursuant to §80.68, the RVP requirements for that covered area beginning in the year following the failure shall be adjusted to be more stringent as follows:

(i) The required average RVP level shall be decreased by an additional 0.1 psi; and

(ii) The maximum RVP level for each gallon of averaged gasoline shall be decreased by an additional 0.1 psi.

(2) On each occasion that a covered area fails a complex model VOC emissions reduction survey conducted pursuant to §80.68, or fails a simple model VOC emissions reduction survey conducted pursuant to §80.68 during 1997, the VOC emissions performance standard for that covered area beginning in the year following the failure shall be adjusted to be more stringent as follows:

(i) The required average VOC emissions reduction shall be increased by an additional 1.0%; and

(ii) The minimum VOC emissions reduction, for each gallon of averaged gasoline, shall be increased by an additional 1.0%.

(3) In the event that a covered area for which required VOC emissions reductions have been made more stringent passes all VOC emissions reduction surveys in two consecutive years, the averaging standards VOC emissions reduction for that covered area beginning in the year following the second year of passed survey series shall be made less stringent as follows:

(i) The required average VOC emissions reduction shall be decreased by 1.0%; and

(ii) The minimum VOC emissions reduction shall be decreased by 1.0%.

(4) In the event that a covered area for which the required VOC emissions reductions have been made less stringent fails a subsequent VOC emissions reduction survey:

(i) The required average VOC emission reductions for that covered area beginning in the year following this subsequent failure shall be made more stringent by increasing the required average and the minimum VOC emissions reduction by 1.0%; and

(ii) The required VOC emission reductions for that covered area thereafter shall not be made less stringent regardless of the results of subsequent VOC emissions reduction surveys.

(l) *Effect of toxics survey failure.* (1) On each occasion during 1995 or 1996 that a covered area fails a simple model toxics emissions reduction survey series, conducted pursuant to §80.68, the simple model toxics emissions reduction requirement for that covered area beginning in the year following the year of the failure is made more stringent by increasing the average toxics emissions reduction by an additional 1.0%.

(2) On each occasion that a covered area fails a complex model toxics emissions reduction survey series, conducted pursuant to §80.68, or fails a simple model toxics emissions reduction survey series conducted pursuant to §80.68 during 1997, the complex model toxics emissions reduction requirement for that covered area beginning in the year following the year of the failure is made more stringent by increasing the average toxics emissions reduction by an additional 1.0%.

(3) In the event that a covered area for which the toxics emissions standard has been made more stringent passes all toxics emissions survey series in two consecutive years, the averaging standard for toxics emissions reductions for that covered area beginning in the year following the second year of passed survey series shall be made less stringent by decreasing the average toxics emissions reduction by 1.0%.

(4) In the event that a covered area for which the toxics emissions reduction standard has been made less stringent fails a subsequent toxics emissions reduction survey series:

(i) The standard for toxics emissions reduction for that covered area beginning in the year following this subsequent failure shall be made more stringent by increasing the average toxics emissions reduction by 1.0%; and

(ii) The standard for toxics emissions reduction for that covered area thereafter shall not be made less stringent regardless of the results of subsequent toxics emissions reduction surveys.

(m) *Effect of NO_X survey or survey series failure.* (1) On each occasion that a covered area fails a NO_X emissions reduction survey or survey series conducted pursuant to § 80.68, the required average NO_X emissions reductions for that covered area beginning in the year following the failure shall be increased in stringency by an additional 1.0%.

(2) In the event that a covered area for which required NO_X emissions reductions have been made more stringent passes all NO_X emissions reduction surveys and survey series in two consecutive years, the required average NO_X emissions reductions for that covered area beginning in the year following the second year of passed surveys and survey series shall be decreased in stringency by 1.0%.

(3) In the event that a covered area for which the required NO_X emissions reductions have been made less stringent fails a subsequent NO_X emissions reduction survey or survey series:

(i) The required average NO_X emission reductions for that covered area beginning in the year following this subsequent failure shall be increased in stringency by 1.0%; and

(ii) The required NO_X emission reductions for that covered area thereafter shall not be made less stringent regardless of the results of subsequent NO_X emissions reduction surveys or survey series.

(n) *Effect of benzene survey failure.* (1) On each occasion that a covered area fails a benzene content survey series, conducted pursuant to § 80.68, the benzene content standards for that covered area beginning in the year following the year of the failure shall be made more stringent as follows:

(i) The average benzene content shall be decreased by 0.05% by volume; and

(ii) The maximum benzene content for each gallon of averaged gasoline shall be decreased by 0.10% by volume.

(2) In the event that a covered area for which the benzene standards have been made more stringent passes all benzene content survey series conducted in two consecutive years, the benzene standards for that covered area beginning in the year following the second year of passed survey series shall be made less stringent as follows:

(i) The average benzene content shall be increased by 0.05% by volume; and

(ii) The maximum benzene content for each gallon of averaged gasoline shall be increased by 0.10% by volume.

(3) In the event that a covered area for which the benzene standards have been made less stringent fails a subsequent benzene content survey series:

(i) The standards for benzene content for that covered area beginning in the year following this subsequent failure shall be the more stringent standards which were in effect prior to the operation of paragraph (n)(2) of this section; and

(ii) The standards for benzene content for that covered area thereafter shall not be made less stringent regardless of the results of subsequent benzene content surveys.

(o) [Reserved]

(p) *Effective date for changed minimum or maximum standards.* In the case of any minimum or maximum standard that is changed to be more stringent by operation of paragraphs (k), (m), (n), or (o) of this section, the effective date for such change shall be the following number of days after the date EPA announces the change:

(1) 90 days for refinery or import facilities;

(2) 180 days for retail outlets and wholesale purchaser-consumer facilities; and

(3) 150 days for all other facilities.

(q) *Refineries and importers subject to adjusted standards.* Standards for average compliance that are adjusted to be more or less stringent by operation of paragraphs (k), (l) (m) or (n) of this section apply to average reformulated gasoline produced at each refinery or imported by each importer as follows:

(1) Adjusted standards for a covered area apply to averaged reformulated gasoline that is produced at a refinery if:

(i) Any averaged reformulated gasoline from that refinery supplied the covered area during any year a survey was conducted which gave rise to a standards adjustment; or

(ii) Any averaged reformulated gasoline from that refinery supplies the covered area during any year that the standards are more stringent than the initial standards; unless

(iii) The refiner is able to show that the volume of averaged reformulated gasoline from a refinery that supplied the covered area during any years under paragraphs (q)(1)(i) or (ii) of this section was less than one percent of the reformulated gasoline produced at the refinery during that year, or 100,000 barrels, whichever is less.

(2) Adjusted standards for a covered area apply to averaged reformulated gasoline that is imported by an importer if:

(i) The covered area with the adjusted standard is located in Petroleum Administration for Defense District (PADD) I, and the gasoline is imported at a facility located in PADDs I, II or III;

(ii) The covered area with the adjusted standard is located in PADD II, and the gasoline is imported at a facility located in PADDs I, II, III, or IV;

(iii) The covered area with the adjusted standard is located in PADD III, and the gasoline is imported at a facility located in PADDs II, III, or IV;

(iv) The covered area with the adjusted standard is located in PADD IV, and the gasoline is imported at a facility located in PADDs II, or IV; or

(v) The covered area with the adjusted standard is located in PADD V, and the gasoline is imported at a facility located in PADDs III, IV, or V; unless

(vi) Any gasoline which is imported by an importer at any facility located in any PADD supplies the covered area, in which case the adjusted standard also applies to averaged gasoline imported at that facility by that importer.

(3) Any gasoline that is transported in a fungible manner by a pipeline, barge, or vessel shall be considered to have supplied each covered area that is supplied with any gasoline by that pipeline, or barge or vessel shipment, unless the refiner or importer is able to establish that the gasoline it produced or imported was supplied only to a smaller number of covered areas.

(4) Adjusted standards apply to all averaged reformulated gasoline produced by a refinery or imported by an importer identified in this paragraph (q), except:

(i) In the case of adjusted VOC standards for a covered area located in VOC Control Region 1, the adjusted VOC standards apply only to averaged reformulated gasoline designated as VOC-controlled intended for use in VOC Control Region 1; and

(ii) In the case of adjusted VOC standards for a covered area located in VOC Control Region 2, the adjusted VOC standards apply only to averaged reformulated gasoline designated as VOC-controlled intended for use in VOC Control Region 2.

(r) *Definition of PADD*. For the purposes of this section only, the following definitions of PADDs apply:

(1) The following States are included in PADD I:

Connecticut	New Hampshire
Delaware	New Jersey
District of Columbia	North Carolina
Florida	Pennsylvania
Georgia	Rhode Island
Maine	South Carolina
Maryland	Vermont
Massachusetts	Virginia
New York	West Virginia

(2) The following States are included in PADD II:

Illinois	Nebraska
Indiana	North Dakota
Iowa	Ohio
Kansas	Oklahoma
Kentucky	South Dakota
Michigan	Tennessee
Minnesota	Wisconsin
Missouri	

(3) The following States are included in PADD III:

Alabama	Mississippi
Arkansas	New Mexico
Louisiana	Texas

(4) The following States are included in PADD IV:

Colorado	Utah
Idaho	Wyoming
Montana	

(5) The following States are included in PADD V:

Arizona	Oregon
California	Washington
Nevada	

[59 FR 7813, Feb. 16, 1994, as amended at 59 FR 36958, July 20, 1994; 61 FR 12041, Mar. 25, 1996; 62 FR 68205, Dec. 31, 1997; 64 FR 37689, July 13, 1999; 66 FR 37164, July 17, 2001; 71 FR 74566, Dec. 15, 2005; 71 FR 8972, Feb. 22, 2006; 71 FR 26698, May 8, 2006; 72 FR 8543, Feb. 26, 2007]

§ 80.42 Simple emissions model.

(a) *VOC emissions*. The following equations shall comprise the simple model for VOC emissions. The simple model for VOC emissions shall be used only in determining toxics emissions:

Summer = The period of May 1 through September 15

Winter = The period of September 16 through April 30

EXHVOCS1 = Exhaust nonmethane, nonethane VOC emissions from the fuel in question, in grams per mile, for VOC control region 1 during the summer period.

EXHVOCS2 = Exhaust nonmethane, nonethane VOC emissions from the fuel in question, in grams per mile, for VOC control region 2 during the summer period.

EXHVOCW = Exhaust nonmethane, nonethane VOC emissions from the fuel in question, in grams per mile, during the winter period.

EVPVOCS1 = Evaporative nonmethane, nonethane VOC emissions from the fuel in question, in grams per mile, for VOC control region 1 during the summer period.

EVPVOCS2 = Evaporative nonmethane, nonethane VOC emissions from the fuel in question, in grams per mile, for VOC control region 2 during the summer period.

RLVOCS1 = Running loss nonmethane, nonethane VOC emissions from the fuel in question, in grams per mile, for VOC control region 1 during the summer period.

RLVOCS2 = Running loss nonmethane, nonethane VOC emissions from the fuel in question, in grams per mile, for VOC control region 2 during the summer period.

REFVOCS1 = Refueling nonmethane, nonethane VOC emissions from the fuel in question, in grams per mile, for VOC control region 1 during the summer period.

REFVOCS2 = Refueling nonmethane, nonethane VOC emissions from the fuel in question, in grams per mile, for VOC control region 2 during the summer period.

OXCON = Oxygen content of the fuel in question, in terms of weight percent (as measured under § 80.46)

RVP = Reid vapor pressure of the fuel in question, in pounds per square inch (psi)

(1) The following equations shall comprise the simple model for VOC emissions in VOC Control Region 1 during the summer period:

$$EXHVOCS1 = 0.444\times(1-(0.127/2.7)\times OXCON)$$
$$EVPVOCS1 = 0.7952-0.2461\times RVP+0.02293\times RVP\times RVP$$
$$RLVOCS1 = -0.734+0.1096\times RVP+0.002791\times RVP\times RVP$$
$$REFVOCS1 = 0.04\times((0.1667\times RVP)-0.45)$$

(2) The following equations shall comprise the simple model for VOC emissions in VOC Control Region 2 during the summer period:

$$EXHVOCS2 = 0.444 \times (1 - (0.127/2.7) \times OXCON)$$
$$EVPVOCS2 = 0.813 - 0.2393 \times RVP + 0.021239 \times RVP \times RVP$$
$$RLVOCS2 = 0.2963 - 0.1306 \times RVP + 0.016255 \times RVP \times RVP$$
$$REFVOCS2 = 0.04 \times ((0.1667 \times RVP) - 0.45)$$

(3) The following equation shall comprise the simple model for VOC emissions during the winter period:

$$EXHVOCW = 0.656 \times (1 - (0.127/2.7) \times OXCON)$$

(b) *Toxics emissions*. The following equations shall comprise the simple model for toxics emissions:

EXHBEN = Exhaust benzene emissions from the fuel in question, in milligrams per mile

EVPBEN = Evaporative benzene emissions from the fuel in question, in milligrams per mile

HSBEN = Hot soak benzene emissions from the fuel in question, in milligrams per mile

DIBEN = Diurnal benzene emissions from the fuel in question, in milligrams per mile

RLBEN = Running loss benzene emissions from the fuel in question, in milligrams per mile

REFBEN = Refueling benzene emissions from the fuel in question, in milligrams per mile

MTBE = Oxygen content of the fuel in question in the form of MTBE, in terms of weight percent (as measured under § 80.46)

ETOH = Oxygen content of the fuel in question in the form of ethanol, in terms of weight percent (as measured under § 80.46)

ETBE = Oxygen content of the fuel in question in the form of ETBE, in terms of weight percent (as measured under § 80.46)

FORM = Formaldehyde emissions from the fuel in question, in milligrams per mile

ACET = Acetaldehyde emissions from the fuel in question, in milligrams per mile

POM = Emissions of polycyclic organic matter from the fuel in question, in milligrams per mile

BUTA = Emissions of 1,3-Butadiene from the fuel in question, in milligrams per mile
FBEN = Fuel benzene of the fuel in question, in terms of volume percent (as measured under § 80.46)
FAROM = Fuel aromatics of the fuel in question, in terms of volume percent (as measured under § 80.46)
TOXREDS1 = Total toxics reduction of the fuel in question during the summer period for VOC control region 1 in percent
TOXREDS2 = Total toxics reduction of the fuel in question during the summer period for VOC control region 2 in percent
TOXREDW = Total toxics reduction of the fuel in question during the winter period in percent

(1) The following equations shall comprise the simple model for toxics emissions in VOC control region 1 during the summer period:

TOXREDS1 = [100 × (53.2 − EXHBEN − EVPBEN − RLBEN − REFBEN − FORM − ACET − BUTA − POM)] / 53.2
EXHBEN = [1.884+0.949 × FBEN + 0.113 × (FAROM − FBEN)) / 100] × 1000 × EXHVOCS1
EVPBEN = HSBEN + DIBEN
HSBEN = FBEN × (EVPVOCS1 × 0.679) × 1000 × [(1.4448 − (0.0684 × MTBE/2.0) − (0.080274 × RVP)) / 100]
DIBEN = FBEN × (EVPVOCS1 × 0.321) × 1000 × [(1.3758 − (0.0579 × MTBE/2.0) − (0.080274 × RVP)) / 100]
RLBEN = FBEN × RLVOCS1 × 1000 × [(1.4448 − (0.0684 × MTBE/2.0) − (0.080274 × RVP)) / 100]
REFBEN = FBEN × REFVOCS1 × 1000 × [(1.3972 − (0.0591 × MTBE / 2.0) − (0.081507 × RVP)) / 100] BUTA = 0.00556 × EXHVOCS1 × 1000
POM = 3.15 × EXHVOCS1

(i) For any oxygenate or mixtures of oxygenates, the formaldehyde and acetaldehyde shall be calculated with the following equations:

FORM = 0.01256 × EXHVOCS1 × 1000 × [1 + (0.421 / 2.7) × MTBE + TAME) + (0.358 / 3.55) × ETOH + (0.137 / 2.7) × (ETBE + ETAE)]
ACET = 0.00891 × EXHVOCS1 × 1000 × [1 + (0.078 / 2.7) × (MTBE + TAME) + (0.865 / 3.55) × ETOH + (0.867 / 2.7) × (ETBE + ETAE)]

(ii) When calculating formaldehyde and acetaldehyde emissions using the equations in paragraph (b)(1)(i) of this section, oxygen in the form of alcohols which are more complex or have higher molecular weights than ethanol shall be evaluated as if it were in the form of ethanol. Oxygen in the form of methyl ethers other than TAME and MTBE shall be evaluated as if it were in the form of MTBE. Oxygen in the form of ethyl ethers other than ETBE shall be evaluated as if it were in the form of ETBE. Oxygen in the form of non-methyl, non-ethyl ethers shall be evaluated as if it were in the form of ETBE. Oxygen in the form of methanol or non-alcohol, non-ether oxygenates shall not be evaluated with the Simple Model, but instead must be evaluated through vehicle testing under the Complex Model per § 80.48.

(2) The following equations shall comprise the simple model for toxics emissions in VOC control region 2 during the summer period:

TOXREDS2 = 100 × (52.1 − EXHBEN − EVPBEN − RLBEN − REFBEN − FORM − ACET − BUTA − POM) / 52.1
EXHBEN = [(1.884 + 0.949 × FBEN + 0.113 × (FAROM − FBEN)) / 100] × 1000 × EXHVOCS2
EVPBEN = HSBEN + DIBEN
HSBEN = FBEN × (EVPVOCS2 × 0.679) × 1000 × [(1.4448 − (0.0684 × MTBE / 2.0) − (0.080274 × RVP)) / 100]
DIBEN = FBEN × (EVPVOCS2 × 0.321) × 1000 × [(1.3758 − (0.0579 × MTBE / 2.0) − (0.080274 × RVP)) / 100]
RLBEN = FBEN × RLVOCS2 × 1000 × [(1.4448 − (0.0684 × MTBE / 2.0) − (0.080274 × RVP)) / 100]
REFBEN = FBEN × REFVOCS2 × 1000 × [(1.3972 − (0.0591 × MTBE / 2.0) − (0.081507 × RVP)) / 100]
BUTA = 0.00556 × EXHVOCS2 × 1000
POM = 3.15 × EXHVOCS2

(i) For any oxygenate or mixtures of oxygenates, the formaldehyde and acetaldehyde shall be calculated with the following equations:

FORM = 0.01256 × EEXHVOCS2 × 1000 × [1 + (0.421 / 2.7) × (MTBE + TAME) + (0.358 / 3.55) × ETOH + (0.137 / 2.7) × (ETBE + ETAE)]
ACET = 0.00891 × EXHVOCS2 × 1000 × [1 + (0.078 / 2.7) × (MTBE + TAME) + (0.865 / 3.55) × ETOH + (0.867 / 2.7) × (ETBE + ETAE)]

(ii) When calculating formaldehyde and acetaldehyde emissions using the equations in paragraph (b)(2)(i) of this section, oxygen in the form of alcohols which are more complex or have higher molecular weights than ethanol shall be evaluated as if it were in the form of ethanol. Oxygen in the form of methyl ethers other than TAME and MTBE shall be evaluated as if it were in the

form of MTBE. Oxygen in the form of ethyl ethers other than ETBE shall be evaluated as if it were in the form of ETBE. Oxygen in the form of non-methyl, non-ethyl ethers shall be evaluated as if it were in the form of ETBE. Oxygen in the form of methanol or non-alcohol, non-ether oxygenates shall not be evaluated with the Simple Model, but instead must be evaluated through vehicle testing under the Complex Model per § 80.48.

(3) The following equations shall comprise the simple model for toxics emissions during the winter period:

$$TOXREDW = 100 \times (55.5 - EXHBEN - FORM - ACET - BUTA - POM) / 55.5$$

$$EXHBEN = [(1.884 + 0.949 \times FBEN + 0.113 \times (FAROM - FBEN)) / 100] \times 1000 \times EXHVOCW$$

$$BUTA = 0.00556 \times EXHVOCW \times 1000$$

$$POM = 2.13 \times EXHVOCW$$

(i) For any oxygenate or mixtures of oxygenates, the formaldehyde and acetaldehyde shall be calculated with the following equations:

$$FORM = 0.01256 \times EXHVOCS1 \times 1000 \times [1 + (0.421 / 2.7) \times (MTBE + TAME) + (0.358 / 3.55) \times ETOH + (0.137 / 2.7) \times (ETBE + ETAE)]$$

$$ACET = 0.00891 \times EXHVOCS1 \times 1000 \times [1 + (0.078 / 2.7) \times (MTBE + TAME) + (0.865 / 3.55) \times ETOH + (0.867 / 2.7) \times (ETBE + ETAE)]$$

(ii) When calculating formaldehyde and acetaldehyde emissions using the equations in paragraph (b)(3)(i) of this section, oxygen in the form of alcohols which are more complex or have higher molecular weights than ethanol shall be evaluated as if it were in the form of ethanol. Oxygen in the form of methyl ethers other than TAME and MTBE shall be evaluated as if it were in the form of MTBE. Oxygen in the form of ethyl ethers other than ETBE shall be evaluated as if it were in the form of ETBE. Oxygen in the form of non-methyl, non-ethyl ethers shall be evaluated as if it were in the form of ETBE. Oxygen in the form of methanol or non-alcohol, non-ether oxygenates shall not be evaluated with the Simple Model, but instead must be evaluated through vehicle testing under the Complex Model per § 80.48.

(4) If the fuel aromatics content of the fuel in question is less than 10 volume percent, then an FAROM value of 10 volume percent shall be used when evaluating the toxics emissions equations given in paragraphs (b)(1), (b)(2), and (b)(3) of this section.

(c) *Limits of the model.* (1) The model given in paragraphs (a) and (b) of this section shall be used as given to determine VOC and toxics emissions, respectively, if the properties of the fuel being evaluated fall within the ranges shown in this paragraph (c). If the properties of the fuel being evaluated fall outside the range shown in this paragraph (c), the model may not be used to determine the VOC or toxics performance of the fuel:

Fuel parameter	Range
Benzene content	0.0–4.9 vol %.
RVP	6.6–9.0 psi.[1]
Oxygenate content	0–4.0 wt %.
Aromatics content	0–55 vol %.

[1] For gasoline sold in California, the applicable RVP range shall be 6.4–9.0 psi.

(2) The model given in paragraphs (a) and (b) of this section shall be effective from January 1, 1995 through December 31, 1997, unless extended by action of the Administrator.

[59 FR 7813, Feb. 16, 1994, as amended at 59 FR 36958, July 20, 1994; 61 FR 20738, May 8, 1996]

§§ 80.43–80.44 [Reserved]

§ 80.45 Complex emissions model.

(a) *Definition of terms.* For the purposes of this section, the following definitions shall apply:

Target fuel = The fuel which is being evaluated for its emissions performance using the complex model

OXY = Oxygen content of the target fuel in terms of weight percent

SUL = Sulfur content of the target fuel in terms of parts per million by weight

RVP = Reid Vapor Pressure of the target fuel in terms of pounds per square inch

E200 = 200 °F distillation fraction of the target fuel in terms of volume percent

E300 = 300 °F distillation fraction of the target fuel in terms of volume percent

ARO = Aromatics content of the target fuel in terms of volume percent

BEN = Benzene content of the target fuel in terms of volume percent

OLE = Olefins content of the target fuel in terms of volume percent

MTB = Methyl tertiary butyl ether content of the target fuel in terms of weight percent oxygen

ETB = Ethyl tertiary butyl ether content of the target fuel in terms of weight percent oxygen
TAM = Tertiary amyl methyl ether content of the target fuel in terms of weight percent oxygen
ETH = Ethanol content of the target fuel in terms of weight percent oxygen
exp = The function that raises the number e (the base of the natural logarithm) to the power in its domain
Phase I = The years 1995–1999
Phase II = Year 2000 and beyond

(b) *Weightings and baselines for the complex model.* (1) The weightings for normal and higher emitters (w_1 and w_2, respectively) given in table 1 shall be used to calculate the exhaust emission performance of any fuel for the appropriate pollutant and Phase:

TABLE 1—NORMAL AND HIGHER EMITTER WEIGHTINGS FOR EXHAUST EMISSIONS

	Phase I		Phase II	
	VOC & toxics	NO_X	VOC & toxics	NO_X
Normal Emitters (w_1)	0.52	0.82	0.444	0.738
Higher Emitters (w_2) ..	0.48	0.18	0.556	0.262

(2) The following properties of the baseline fuels shall be used when determining baseline mass emissions of the various pollutants:

TABLE 2—SUMMER AND WINTER BASELINE FUEL PROPERTIES

Fuel property	Summer	Winter
Oxygen (wt %)	0.0	0.0
Sulfur (ppm)	339	338
RVP (psi)	8.7	11.5

TABLE 2—SUMMER AND WINTER BASELINE FUEL PROPERTIES—Continued

Fuel property	Summer	Winter
E200 (%)	41.0	50.0
E300 (%)	83.0	83.0
Aromatics (vol %)	32.0	26.4
Olefins (vol %)	9.2	11.9
Benzene (vol %)	1.53	1.64

(3) The baseline mass emissions for VOC, NO_X and toxics given in tables 3, 4 and 5 of this paragraph (b)(3) shall be used in conjunction with the complex model during the appropriate Phase and season:

TABLE 3—BASELINE EXHAUST EMISSIONS

Exhaust pollutant	Phase I		Phase II	
	Summer (mg/mile)	Winter (mg/mile)	Summer (mg/mile)	Winter (mg/mile)
VOC	446.0	660.0	907.0	1341.0
NO_X	660.0	750.0	1340.0	1540.0
Benzene	26.10	37.57	53.54	77.62
Acetaldehyde	2.19	3.57	4.44	7.25
Formaldehyde	4.85	7.73	9.70	15.34
1,3-Butadiene	4.31	7.27	9.38	15.84
POM	1.50	2.21	3.04	4.50

TABLE 4—BASELINE NON-EXHAUST EMISSIONS (SUMMER ONLY)

Non-exhaust pollutant	Phase I		Phase II	
	Region 1 (mg/mile)	Region 2 (mg/mile)	Region 1 (mg/mile)	Region 2 (mg/mile)
VOC	860.48	769.10	559.31	492.07
Benzene	9.66	8.63	6.24	5.50

TABLE 5—TOTAL BASELINE VOC, NO_X AND TOXICS EMISSIONS

Pollutant	Summer (mg/mile)				Winter (mg/mile)			
	Phase I		Phase II		Phase I		Phase II	
	Region 1	Region 2	Region 1	Region 2	Region 1	Region 2	Region 1	Region 2
NO_X	660.0	660.0	1340.0	1340.0	750.0	750.0	1540.0	1540.0
VOC	1306.5	1215.1	1466.3	1399.1	660.0	660.0	1341.0	1341.0
Toxics	48.61	47.58	86.34	85.61	58.36	58.36	120.55	120.55

(c) *VOC performance.* (1) The exhaust VOC emissions performance of gasolines shall be given by the following equations:

$$VOCE = VOC(b)+(VOC(b)\times Y_{voc}(t)/100)$$
$$Y_{voc}(t) = [(w_1\times N_v)+(w_2\times H_v)-1]\times 100$$

where

VOCE = Exhaust VOC emissions in milligrams/mile
$Y_{voc}(t)$ = Exhaust VOC performance of the target fuel in terms of percentage change from baseline
VOC(b) = Baseline exhaust VOC emissions as defined in paragraph (b)(2) of this section for the appropriate Phase and season
$N_v = [\exp v_1(t)]/[\exp v_1(b)]$

H_v = [exp $v_2(t)$]/[exp $v_2(b)$]

w_1 = Weighting factor for normal emitters as defined in paragraph (b)(1) of this section for the appropriate Phase

w_2 = Weighting factor for higher emitters as defined in paragraph (b)(1) of this section for the appropriate Phase

$v_1(t)$ = Normal emitter VOC equation as defined in paragraph (c)(1)(i) of this section, evaluated using the target fuel's properties subject to paragraphs (c)(1)(iii) and (iv) of this section

$v_2(t)$ = Higher emitter VOC equation as defined in paragraph (c)(1)(ii) of this section, evaluated using the target fuel's properties subject to paragraphs (c)(1)(iii) and (iv) of this section

$v_1(b)$ = Normal emitter VOC equation as defined in paragraph (c)(1)(i) of this section, evaluated using the base fuel's properties

$v_2(b)$ = Higher emitter VOC equation as defined in paragraph (c)(1)(ii) of this section, evaluated using the base fuel's properties

(i) *Consolidated VOC equation for normal emitters.*

$$v_1 = (-0.003641 \times OXY) + (0.0005219 \times SUL) + (0.0289749 \times RVP) + (-0.014470 \times E200) + (-0.068624 \times E300) + (0.0323712 \times ARO) + (-0.002858 \times OLE) + (0.0001072 \times E2002) + (0.0004087 \times E3002) + (-0.0003481 \times ARO \times E300)$$

(ii) *VOC equation for higher emitters.*

$$v_2 = (-0.003626 \times OXY) + (-5.40\times10^{-5} \times SUL) + (0.043295 \times RVP) + (-0.013504 \times E200) + (-0.062327 \times E300) + (0.0282042 \times ARO) + (-0.002858 \times OLE) + (0.000106 \times E200^2) + (0.000408 \times E300^2) + (-0.000287 \times ARO \times E300)$$

(iii) *Flat line extrapolations.* (A) During Phase I, fuels with E200 values greater than 65.83 percent shall be evaluated with the E200 fuel parameter set equal to 65.83 percent when calculating $Y_{voc}(t)$ and VOCE using the equations described in paragraphs (c)(1) (i) and (ii) of this section. Fuels with E300 values greater than E300* (calculated using the equation E300* = 80.32+[0.390×ARO]) shall be evaluated with the E300 parameter set equal to E300* when calculating VOCE using the equations described in paragraphs (c)(1)(i) and (ii) of this section. For E300* values greater than 94, the linearly extrapolated model presented in paragraph (c)(1)(iv) of this section shall be used.

(B) During Phase II, fuels with E200 values greater than 65.52 percent shall be evaluated with the E200 fuel parameter set equal to 65.52 percent when calculating VOCE using the equations described in paragraphs (c)(1) (i) and (ii) of this section. Fuels with E300 values greater than E300* (calculated using the equation E300* = 79.75+[0.385 × ARO]) shall be evaluated with the E300 parameter set equal to E300* when calculating VOCE using the equations described in paragraphs (c)(1) (i) and (ii) of this section. For E300* values greater than 94, the linearly extrapolated model presented in paragraph (c)(1)(iv) of this section shall be used.

(C) During Phase II, fuels with an oxygen concentration greater than 4.0 weight percent and not more than 5.8 weight percent shall be evaluated with the OXY fuel parameter set equal to 4.0 percent by weight when calculating VOCE using the equations described in paragraphs (c)(1)(i) and (c)(1)(ii) of this section.

(iv) *Linear extrapolations.* (A) The equations in paragraphs (c)(1) (i) and (ii) of this section shall be used within the allowable range of E300, E200, and ARO for the appropriate Phase, as defined in table 6:

TABLE 6—ALLOWABLE RANGES OF E200, E300, AND ARO FOR THE EXHAUST VOC EQUATIONS IN PARAGRAPHS (C)(1)(I) AND (II) OF THIS SECTION

Fuel parameter	Phase I		Phase II	
	Lower limit	Higher limit	Lower limit	Higher limit
E200 ..	33.00	65.83	33.00	65.52
E300 ..	72.00	Variable [1]	72.00	Variable [2]
ARO ...	18.00	46.00	18.00	46.00

[1] Higher E300 limit = lower of 94.0 or 80.32+[0.390×(ARO)].
[2] Higher E300 limit = lower of 94.0 or 79.75+[0.385×(ARO)].

(B) For fuels with E200, E300 and/or ARO levels outside the ranges defined in table 6, $Y_{VOC}(t)$ shall be defined:

(*1*) For Phase I:

$$Y_{VOC}(t) = 100\% \times 0.52 \times [\exp(v_1(et)) / \exp(v_1(b)) - 1] + 100\% \times 0.48 \times [\exp(v_2(et)) / \exp(v_2(b)) - 1] + \{100\% \times 0.52 \times [\exp(v^1(et)) / \exp(v_1(b))] \times [\{[(0.0002144 \times E200_{et}) - 0.014470] \times \Delta E200\} + \{[(0.0008174 \times E300_{et}) - 0.068624 - (0.000348 \times ARO_{et})] \times \Delta E300\} + \{[(-0.000348 \times E300_{et}) + .0323712] \times \Delta ARO\}]\} + \{100\% \times 0.48 \times$$

$[\exp(v_1(et)) / \exp(v_2(b))\}] \times [\{[(0.000212 \times E200_{et}) - 0.01350] \times \Delta E200\} + \{[(0.000816 \times E300_{et}) - 0.06233 - (0.00029 \times ARO_{et})] \times \Delta E300\} + \{[(-0.00029 \times E300\}) + 0.028204] \times \Delta ARO\}]\}$

(*2*) For Phase II:

$Y_{VOC}(t) = 100\% \times 0.444 \times [\exp(v_1(et)) / \exp(v_1(b)) - 1] + 100\% \times 0.556 \times [\exp(v_2(et)) / \exp(v_2(b)) - 1] + \{100\% \times 0.444 \times [\exp(v_1(et)) / \exp(v_1(b))] \times [\{[(0.0002144 \times E200_{et}) - 0.014470] \times \Delta E200\} + \{[(0.0008174 \times E300_{et}) - 0.068624 - (0.000348 \times ARO_{et})] \times \Delta E300\} + \{[(-0.000348 \times E300_{et}) + 0.0323712] \times \Delta ARO\}]\} + \{100\% \times 0.556 \times [\exp(v_2(et)) / \exp(v_2(b))] \times [\{[(0.000212 \times E200_{et}) - 0.01350] \times \Delta E200\} + \{[(0.000816 \times E300_{et}) - 0.06233 - (0.00029 \times ARO_{et})] \times \Delta E300\} + \{[(-0.00029 \times E300_{et}) + 0.028204] \times \Delta ARO\}]\}$

(C) During Phase I, the ''edge target'' fuel shall be identical to the target fuel for all fuel parameters, with the following exceptions:

(*1*) If the E200 level of the target fuel is less than 33 volume percent, then the E200 value for the ''edge target'' fuel shall be set equal to 33 volume percent.

(*2*) If the aromatics level of the target fuel is less than 18 volume percent, then the ARO value for the ''edge target'' fuel shall be set equal to 18 volume percent.

(*3*) If the aromatics level of the target fuel is greater than 46 volume percent, then the ARO value for the ''edge target'' fuel shall be set equal to 46 volume percent.

(*4*) If the E300 level of the target fuel is less than 72 volume percent, then the E300 value for the ''edge target'' fuel shall be set equal to 72 volume percent.

(*5*) If the E300 level of the target fuel is greater than 95 volume percent, then the E300 value of the target fuel shall be set equal to 95 volume percent for the purposes of calculating VOC emissions with the Phase I equation given in paragraph (c)(1)(iv)(B) of this section.

(*6*) If [80.32 + (0.390 × ARO)] exceeds 94 for the target fuel, and the target fuel value for E300 exceeds 94, then the E300 value for the ''edge target'' fuel shall be set equal to 94 volume percent.

(*7*) If the E200 level of the target fuel is less than 33 volume percent, then ΔE200 shall be set equal to (E200 − 33 volume percent).

(*8*) If the E200 level of the target fuel equals or exceeds 33 volume percent, then ΔE200 shall be set equal to zero.

(*9*) If the aromatics level of the target fuel is less than 18 volume percent, then ΔARO shall be set equal to (ARO − 18 volume percent). If the aromatics level of the target fuel is less than 10 volume percent, then ΔARO shall be set equal to −8 volume percent.

(*10*) If the aromatics level of the target fuel is greater than 46 volume percent, then ΔARO shall be set equal to (ARO − 46 volume percent).

(*11*) If neither of the conditions established in paragraphs (c)(1)(iv)(C)(*9*) and (*10*) of this section are met, then ΔARO shall be set equal to zero.

(*12*) If the E300 level of the target fuel is less than 72 percent, then ΔE300 shall be set equal to (E300 − 72 percent).

(*13*) If the E300 level of the target fuel is greater than 94 volume percent and [80.32+(0.390xARO)] also is greater than 94, then ΔE300 shall be set equal to (E300 − 94 volume percent). If the E300 level of the target fuel is greater than 95 volume percent and [80.32+(0.390×ARO)] also is greater than 94, then ΔE300 shall be set equal to 1 volume percent.

(*14*) If neither of the conditions established in paragraphs (c)(1)(iv)(C)(*12*) and (*13*) of this section are met, then ΔE300 shall be set equal to zero.

(D) During Phase II, the ''edge target'' fuel is identical to the target fuel for all fuel parameters, with the following exceptions:

(*1*) If the E200 level of the target fuel is less than 33 volume percent, then the E200 value for the ''edge target'' fuel shall be set equal to 33 volume percent.

(*2*) If the aromatics level of the target fuel is less than 18 volume percent, then the ARO value for the ''edge target'' fuel shall be set equal to 18 volume percent.

(*3*) If the aromatics level of the target fuel is greater than 46 volume percent, then the ARO value for the ''edge target'' fuel shall be set equal to 46 volume percent.

(*4*) If the E300 level of the target fuel is less than 72 volume percent, then the E300 value for the ''edge target'' fuel shall be set equal to 72 volume percent.

(*5*) If the E300 level of the target fuel is greater than 95 volume percent, then the E300 value of the target fuel shall be set equal to 95 volume percent for the purposes of calculating VOC emissions with the Phase II equation given in paragraph (c)(1)(iv)(B) of this section.

(*6*) If [79.75 + (0.385 × ARO)] exceeds 94 for the target fuel, and the target fuel value for E300 exceeds 94, then the E300 value for the ''edge target'' fuel shall be set equal to 94 volume percent.

(*7*) If the E200 level of the target fuel is less than 33 volume percent, then ΔE200 shall be set equal to (E200 − 33 volume percent).

(*8*) If the E200 level of the target fuel equals or exceeds 33 volume percent, then ΔE200 shall be set equal to zero.

(*9*) If the aromatics level of the target fuel is less than 18 volume percent and greater than or equal to 10 volume percent, then ΔARO shall be set equal to (ARO − 18 volume percent). If the aromatics level of the target fuel is less than 10 volume percent, then ΔARO shall be set equal to −8 volume percent.

(*10*) If the aromatics level of the target fuel is greater than 46 volume percent, then ΔARO shall be set equal to (ARO − 46 volume percent).

(*11*) If neither of the conditions established in paragraphs (c)(1)(iv)(D)(9) and (10) of this section are met, then ΔARO shall be set equal to zero.

(*12*) If the E300 level of the target fuel is less than 72 percent, then ΔE300 shall be set equal to (E300 − 72 percent).

(*13*) If the E300 level of the target fuel is greater than 94 volume percent and (79.75 + (0.385 × ARO)) also is greater than 94, then ΔE300 shall be set equal to (E300 − 94 volume percent). If the E300 level of the target fuel is greater than 95 volume percent and (79.75 + (0.385 × ARO)) also is greater than 94, then ''E300 shall be set equal to 1 volume percent.

(2) The winter exhaust VOC emissions performance of gasolines shall be given by the equations presented in paragraph (c)(1) of this section with the RVP value set to 8.7 psi for both the baseline and target fuels.

(3) The nonexhaust VOC emissions performance of gasolines in VOC Control Region 1 shall be given by the following equations, where:

VOCNE1 = Total nonexhaust emissions of volatile organic compounds in VOC Control Region 1 in grams per mile
VOCDI1 = Diurnal emissions of volatile organic compounds in VOC Control Region 1 in grams per mile
VOCHS1 = Hot soak emissions of volatile organic compounds in VOC Control Region 1 in grams per mile
VOCRL1 = Running loss emissions of volatile organic compounds in VOC Control Region 1 in grams per mile
VOCRF1 = Refueling emissions of volatile organic compounds in VOC Control Region 1 in grams per mile

(i) During Phase I:

$$VOCNE1 = VOCDI1 + VOCHS1 + VOCRL1 + VOCRF1$$
$$VOCDI1 = [0.00736 \times (RVP^2)] - [0.0790 \times RVP] + 0.2553$$
$$VOCHS1 = [0.01557 \times (RVP^2)] - [0.1671 \times RVP] + 0.5399$$
$$VOCRL1 = [0.00279 \times (RVP^2)] + [0.1096 \times RVP] - 0.7340$$
$$VOCRF1 = [0.006668 \times RVP] - 0.0180$$

(ii) During Phase II:

$$VOCNE1 = VOCDI1 + VOCHS1 + VOCRL1 + VOCRF1$$
$$VOCDI1 = [0.007385 \times (RVP^2)] - [0.08981 \times RVP] + 0.3158$$
$$VOCHS1 = [0.006654 \times (RVP^2)] - [0.08094 \times RVP] + 0.2846$$
$$VOCRL1 = [0.017768 \times (RVP^2)] - [0.18746 \times RVP] + 0.6146$$
$$VOCRF1 = [0.004767 \times RVP] + 0.011859$$

(4) The nonexhaust VOC emissions performance of gasolines in VOC Control Region 2 shall be given by the following equations, where:

VOCNE2 = Total nonexhaust emissions of volatile organic compounds in VOC Control Region 2 in grams per mile
VOCDI2 = Diurnal emissions of volatile organic compounds in VOC Control Region 2 in grams per mile
VOCHS2 = Hot soak emissions of volatile organic compounds in VOC Control Region 2 in grams per mile
VOCRL2 = Running loss emissions of volatile organic compounds in VOC Control Region 2 in grams per mile
VOCRF2 = Refueling emissions of volatile organic compounds in VOC Control Region 2 in grams per mile

(i) During Phase I:

$VOCNE2 = VOCDI2 + VOCHS2 + VOCRL2 + VOCRF2$
$VOCDI2 = [0.006818 \times (RVP^2)] - [0.07682 \times RVP] + 0.2610$
$VOCHS2 = [0.014421 \times (RVP^2)] - [0.16248 \times RVP] + 0.5520$
$VOCRL2 = [0.016255 \times (RVP^2)] - [0.1306 \times RVP] + 0.2963$
$VOCRF2 = [0.006668 \times RVP] - 0.0180$

(ii) During Phase II:

$VOCNE2 = VOCDI2 + VOCHS2 + VOCRL2 + VOCRF2$
$VOCDI2 = [0.004775 \times (RVP^2)] - [0.05872 \times RVP] + 0.21306$
$VOCHS2 = [0.006078 \times (RVP^2)] - [0.07474 \times RVP] + 0.27117$
$VOCRL2 = [0.016169 \times (RVP^2)] - [0.17206 \times RVP] + 0.56724$
$VOCRF2 = [0.004767 \times RVP] + 0.011859$

(5) Winter VOC emissions shall be given by VOCE, as defined in paragraph (c)(2) of this section, using the appropriate baseline emissions given in paragraph (b)(3) of this section. Total nonexhaust VOC emissions shall be set equal to zero under winter conditions.

(6) *Total VOC emissions.* (i) Total summer VOC emissions shall be given by the following equations:

$VOCS1 = (VOCE / 1000) + VOCNE1$
$VOCS2 = (VOCE / 1000) + VOCNE2$
VOCS1 = Total summer VOC emissions in VOC Control Region 1 in terms of grams per mile
VOCS2 = Total summer VOC emissions in VOC Control Region 2 in terms of grams per mile

(ii) Total winter VOC emissions shall be given by the following equations:

$VOCW = (VOCE/1000)$
VOCW = Total winter VOC emissions in terms of grams per mile

(7) *Phase I total VOC emissions performance.* (i) The total summer VOC emissions performance of the target fuel in percentage terms from baseline levels shall be given by the following equations during Phase I:

$VOCS1\% = [100\% \times (VOCS1 - 1.306 \text{ g/mi})]/(1.306 \text{ g/mi})$
$VOCS2\% = [100\% \times (VOCS2 - 1.215 \text{ g/mi})]/(1.215 \text{ g/mi})$
VOC1% = Percentage change in VOC emissions from baseline levels in VOC Control Region 1
VOC2% = Percentage change in VOC emissions from baseline levels in VOC Control Region 2

(ii) The total winter VOC emissions performance of the target fuel in percentage terms from baseline levels shall be given by the following equations during Phase I:

$VOCW\% = [100\% \times (VOCW - 0.660 \text{ g/mi})]/(0.660 \text{ g/mi})$
VOCW% = Percentage change in winter VOC emissions from baseline levels

(8) *Phase II total VOC emissions performance.* (i) The total summer VOC emissions performance of the target fuel in percentage terms from baseline levels shall be given by the following equations during Phase II:

$VOCS1\% = [100\% \times (VOCS1 - 1.4663 \text{ g/mi})]/(1.4663 \text{ g/mi})$
$VOCS2\% = [100\% \times (VOCS2 - 1.3991 \text{ g/mi})]/(1.3991 \text{ g/mi})$

(ii) The total winter VOC emissions performance of the target fuel in percentage terms from baseline levels shall be given by the following equation during Phase II:

$VOCW\% = [100\% \times (VOC - 1.341 \text{ g/mi})] / (1.341 \text{ g/mi})$

(d) *NO_X performance.* (1) The summer NO_X emissions performance of gasolines shall be given by the following equations:

$NO_X = NO_X(b) + [NO_X(b) \times Y(t)/100]$
$Y_{NOX}(t) = [(w_1 \times N_n) + (w_2 \times H_n) - 1] \times 100$

where

NO_X = NO_X emissions in milligrams/mile
$Y_{NOx}(t)$ = NO_X performance of target fuel in terms of percentage change from baseline
$NO_X(b)$ = Baseline NO_X emissions as defined in paragraph (b)(2) of this section for the appropriate phase and season
$N_n = \exp n_1(t)/\exp n_1(b)$
$H_n = \exp n_2(t)/\exp n_2(b)$
w_1 = Weighting factor for normal emitters as defined in paragraph (b)(1) of this section for the appropriate Phase
w_2 = Weighting factor for higher emitters as defined in paragraph (b)(1) of this section for the appropriate Phase
$n_1(t)$ = Normal emitter NO_X equation as defined in paragraph (d)(1)(i) of this section, evaluated using the target fuel's properties subject to paragraphs (d)(1)(iii) and (iv) of this section
$n_2(t)$ = Higher emitter NO_X equation as defined in paragraph (d)(1)(ii) of this section, evaluated using the target fuel's properties subject to paragraphs (d)(1)(iii) and (iv) of this section

$n_1(b)$ = Normal emitter NO_X equation as defined in paragraph (d)(1)(i) of this section, evaluated using the base fuel's properties

$n_2(b)$ = Higher emitter NO_X equation as defined in paragraph (d)(1)(ii) of this section, evaluated using the base fuel's properties

(i) *Consolidated equation for normal emitters.*

$$n_1 = (0.0018571 \times OXY) + (0.0006921 \times SUL) + (0.0090744 \times RVP) + (0.0009310 \times E200) + (0.0008460 \times E300) + (0.0083632 \times ARO) + (-0.002774 \times OLE) + (-6.63\times10^{-7} \times SUL^2) + (-0.000119 \times ARO^2) + (0.0003665 \times OLE^2)$$

(ii) *Equation for higher emitters.*

$$n_2 = (-0.00913 \times OXY) + (0.000252 \times SUL) + (-0.01397 \times RVP) + (0.000931 \times E200) + (-0.00401 \times E300) + (0.007097 \times ARO) + (-0.00276 \times OLE) + (0.0003665 \times OLE^2) + (-7.995\times10^{-5} \times ARO^2)$$

(iii) *Flat line extrapolations.* (A) During Phase I, fuels with olefin levels less than 3.77 volume percent shall be evaluated with the OLE fuel parameter set equal to 3.77 volume percent when calculating NO_X performance using the equations described in paragraphs (d)(1)(i) and (ii) of this section. Fuels with aromatics levels greater than 36.2 volume percent shall be evaluated with the ARO fuel parameter set equal to 36.2 volume percent when calculating NO_X performance using the equations described in paragraphs (d)(1)(i) and (ii) of this section.

(B) During Phase II, fuels with olefin levels less than 3.77 volume percent shall be evaluated with the OLE fuel parameter set equal to 3.77 volume percent when calculating NO_X performance using the equations described in paragraphs (d)(1)(i) and (ii) of this section. Fuels with aromatics levels greater than 36.8 volume percent shall be evaluated with the ARO fuel parameter set equal to 36.8 volume percent when calculating NO_X performance using the equations described in paragraphs (d)(1)(i) and (ii) of this section.

(iv) *Linear extrapolations.* (A) The equations in paragraphs (d)(1)(i) and (ii) of this section shall be used within the allowable range of SUL, OLE, and ARO for the appropriate Phase, as defined in the following table 7:

TABLE 7—ALLOWABLE RANGES OF SUL, OLE, AND ARO FOR THE NO_X EQUATIONS IN PARAGRAPHS/(D)(1)(I) AND (II) OF THIS SECTION

Fuel parameter	Phase I		Phase II	
	Low end	High end	Low end	High end
SUL	10.0	450.0	10.0	450.0
OLE	3.77	19.0	3.77	19.0
ARO	18.0	36.2	18.0	36.8

(B) For fuels with SUL, OLE, and/or ARO levels outside the ranges defined in Table 7 of paragraph (d)(1)(iv)(A) of this section, $Y_{NOx}(t)$ shall be defined as:

(*1*) For Phase I:

$$Y_{NOx}(t) = 100\% \times 0.82 \times [\exp(n_1(et))/\exp(n_1(b)) - 1]$$
$$+ 100\% \times 0.18 \times [\exp(n_2(et))/\exp(n_2(b)) - 1]$$
$$+ \{100\% \times 0.82 \times [\exp(n_1(et))/\exp(n_1(b))] \times [\{[(-0.00000133 \times SUL_{et}) + 0.000692] \times \Delta SUL\}$$
$$+ \{[(-0.000238 \times ARO_{et}) + 0.0083632] \times \Delta ARO\}$$
$$+ \{[(0.000733 \times OLE_{et}) - 0.002774] \times \Delta OLE\}]\}$$
$$+ \{100\% \times 0.18 \times [\exp(n_2(et))/\exp(n_2(b))] \times [\{0.000252 \times \Delta SUL\} +$$
$$+ \{[(-0.0001599 \times ARO_{et}) + 0.007097] \times \Delta ARO\}$$
$$+ \{[(0.000732 \times OLE_{et}) - 0.00276] \times \Delta OLE\}]\}$$

(*2*) For Phase II:

$$Y_{NOx}(t) = 100\% \times 0.738 \times [\exp(n_1(et))/\exp(n_1(b)) - 1]$$
$$+ 100\% \times 0.262 \times [\exp(n_2(et)/\exp(n_2(b)) - 1]$$
$$+ [100\% \times 0.738 \times [\exp(n_1(et))/\exp(n_1(b))] \times [\{[(-0.00000133 \times SUL_{et}) + 0.000692] \times \Delta SUL\}$$
$$+ \{[(-0.000238 \times ARO_{et}) + 0.0083632] \times \Delta ARO\}$$
$$+ \{[(0.000733 \times OLE_{et}) - 0.002774] \times \Delta OLE\}]\}$$
$$+ \{100\% \times 0.262 \times [\exp(n_2(et))/\exp(n_2(b))] \times [\{0.000252 \times \Delta SUL\} +$$
$$\times [\{(-0.0001599 \times ARO_{et}) + 0.007097] \times \Delta ARO\}$$
$$+ \{[(0.000732 \times OLE_{et}) - 0.00276] \times \Delta OLE\}]\}$$

Where:

n_1, n_2 = The equations defined in paragraphs (d)(1) (i) and (ii) of this section.

et = Collection of fuel parameters for the ''edge target'' fuel. These parameters are defined in paragraphs (d)(1)(iv) (C) and (D) of this section.

n_1(et) = The function n_1 evaluated with ''edge target'' fuel parameters, which are defined in paragraph (d)(1)(iv)(C) of this section.

n_2(et) = The function n_2 evaluated with ''edge target'' fuel parameters, which are defined in paragraph (d)(1)(iv)(C) of this section.

n_1(b) = The function n_1 evaluated with the appropriate baseline fuel parameters defined in paragraph (b)(2) of this section.

n_2(b) = The function n_2 evaluated with the appropriate baseline fuel parameters defined in paragraph (b)(2) of this section.

SUL_{et} = The value of SUL for the ''edge target'' fuel, as defined in paragraph (d)(1)(iv)(C) of this section.

ARO_{et} = The value of ARO for the ''edge target'' fuel, as defined in paragraph (d)(1)(iv)(C) of this section.

OLE_{et} = The value of OLE for the ''edge target'' fuel, as defined in paragraph (d)(1)(iv)(C) of this section.

(C) For both Phase I and Phase II, the ''edge target'' fuel is identical to the target fuel for all fuel parameters, with the following exceptions:

(*1*) If the sulfur level of the target fuel is less than 10 parts per million, then the value of SUL for the ''edge target'' fuel shall be set equal to 10 parts per million.

(*2*) If the sulfur level of the target fuel is greater than 450 parts per million, then the value of SUL for the ''edge target'' fuel shall be set equal to 450 parts per million.

(*3*) If the aromatics level of the target fuel is less than 18 volume percent, then the value of ARO for the ''edge target'' fuel shall be set equal to 18 volume percent.

(*4*) If the olefins level of the target fuel is greater than 19 volume percent, then the value of OLE for the ''edge target'' fuel shall be set equal to 19 volume percent.

(*5*) If the E300 level of the target fuel is greater than 95 volume percent, then the E300 value of the target fuel shall be set equal to 95 volume percent for the purposes of calculating NO_X emissions with the equations given in paragraph (d)(1)(iv)(B) of this section.

(*6*) If the sulfur level of the target fuel is less than 10 parts per million, then ΔSUL shall be set equal to (SUL − 10 parts per million).

(*7*) If the sulfur level of the target fuel is greater than 450 parts per million, then ΔSUL shall be set equal to (SUL − 450 parts per million).

(*8*) If the sulfur level of the target fuel is neither less than 10 parts per million nor greater than 450 parts per million, ΔSUL shall be set equal to zero.

(*9*) If the aromatics level of the target fuel is less than 18 volume percent and greater than 10 volume percent, then ΔARO shall be set equal to (ARO − 18 volume percent). If the aromatics level of the target fuel is less than 10 volume percent, then ΔARO shall be set equal to −8 volume percent.

(*10*) If the aromatics level of the target fuel is greater than or equal to 18 volume percent, then ΔARO shall be set equal to zero.

(*11*) If the olefins level of the target fuel is greater than 19 volume percent, then ΔOLE shall be set equal to (OLE − 19 volume percent).

(*12*) If the olefins level of the target fuel is less than or equal to 19 volume percent, then ΔOLE shall be set equal to zero.

(2) The winter NO_X emissions performance of gasolines shall be given by the equations presented in paragraph (d)(1) of this section with the RVP value set to 8.7 psi.

(3) The NO_X emissions performance of the target fuel in percentage terms from baseline levels shall be given by the following equations:

For Phase I:

Summer $NO_X\% = [100\% \times (NO_X - 0.660\ g/mi)]/(0.660\ g/mi)$

Winter $NO_X\% = [100\% \times (NO_X - 0.750\ g/mi)]/(0.750\ g/mi)$

For Phase II:

Summer $NO_X\% = [100\% \times (NO_X - 1.340\ g/mi)]/(1.340\ g/mi)$

Winter $NO_X\% = [100\% \times (NO_X - 1.540\ g/mi)]/(1.540\ g/mi)$

Summer $NO_X\%$ = Percentage change in NO_X emissions from summer baseline levels

Winter NO_X% = Percentage change in NO_X emissions from winter baseline levels

(e) *Toxics performance*—(1) *Summer toxics performance*. (i) Summer toxic emissions performance of gasolines in VOC Control Regions 1 and 2 shall be given by the following equations:

TOXICS1 = EXHBZ + FORM + ACET + BUTA + POM + NEBZ1

TOXICS2 = EXHBZ + FORM + ACET + BUTA + POM + NEBZ2

where

TOXICS1 = Summer toxics performance in VOC Control Region 1 in terms of milligrams per mile.

TOXICS2 = Summer toxics performance in VOC Control Region 2 in terms of milligrams per mile.

EXHBZ = Exhaust emissions of benzene in terms of milligrams per mile, as determined in paragraph (e)(4) of this section.

FORM = Emissions of formaldehyde in terms of milligrams per mile, as determined in paragraph (e)(5) of this section.

ACET = Emissions of acetaldehyde in terms of milligrams per mile, as determined in paragraph (e)(6) of this section.

BUTA = Emissions of 1,3-butadiene in terms of milligrams per mile, as determined in paragraph (e)(7) of this section.

POM = Polycyclic organic matter emissions in terms of milligrams per mile, as determined in paragraph (e)(8) of this section.

NEBZ1 = Nonexhaust emissions of benzene in VOC Control Region 1 in milligrams per mile, as determined in paragraph (e)(9) of this section.

NEBZ2 = Nonexhaust emissions of benzene in VOC Control Region 2 in milligrams per mile, as determined in paragraph (e)(10) of this section.

(ii) The percentage change in summer toxics performance in VOC Control Regions 1 and 2 shall be given by the following equations:

For Phase I:

TOXICS1% = [100% × (TOXICS1 − 48.61 mg/mi)]/(48.61 mg/mi)

TOXICS2% = [100% × (TOXICS2 − 47.58 mg/mi)] / (47.58 mg/mi)

For Phase II:

TOXICS1% = [100% × (TOXICS1 − 86.34 mg/mi)] / (86.34 mg/mi)

TOXICS2% = [100% × (TOXICS2 − 85.61 mg/mi)]/(85.61 mg/mi)

where

TOXICS1% = Percentage change in summer toxics emissions in VOC Control Region 1 from baseline levels.

TOXICS2% = Percentage change in summer toxics emissions in VOC Control Region 2 from baseline levels.

(2) *Winter toxics performance*. (i) Winter toxic emissions performance of gasolines in VOC Control Regions 1 and 2 shall be given by the following equation, evaluated with the RVP set at 8.7 psi:

TOXICW = [EXHBZ + FORM + ACET + BUTA + POM]

where

TOXICW = Winter toxics performance in VOC Control Regions 1 and 2 in terms of milligrams per mile.

EXHBZ = Exhaust emissions of benzene in terms of milligrams per mile, as determined in paragraph (e)(4) of this section.

FORM = Emissions of formaldehyde in terms of milligrams per mile, as determined in paragraph (e)(5) of this section.

ACET = Emissions of acetaldehyde in terms of milligrams per mile, as determined in paragraph (e)(6) of this section.

BUTA = Emissions of 1,3-butadiene in terms of milligrams per mile, as determined in paragraph (e)(7) of this section.

POM = Polycyclic organic matter emissions in terms of milligrams per mile, as determined in paragraph (e)(8) of this section.

(ii) The percentage change in winter toxics performance in VOC Control Regions 1 and 2 shall be given by the following equation:

For Phase I:

TOXICW% = [100%×(TOXICW − 58.36 mg/mi)] / (58.36 mg/mi)

For Phase II:

TOXICW% = [100%×(TOXICW − 120.55 mg/mi)] / (120.55 mg/mi)

where

TOXICW% = Percentage change in winter toxics emissions in VOC Control Regions 1 and 2 from baseline levels.

(3) The year-round toxics performance in VOC Control Regions 1 and 2 shall be derived from volume-weighted performances of individual batches of fuel as described in § 80.67(g).

(4) Exhaust benzene emissions shall be given by the following equation, subject to paragragh (e)(4)(iii) of this section:

$$EXHBZ = BENZ(b) + (BENZ(b) \times Y_{BEN}(t)/100)$$

$$Y_{BEN}(t) = [(w_1 \times N_b) + (w_2 \times H_b) - 1] \times 100$$

where

EXHBZ = Exhaust benzene emissions in milligrams/mile

$Y_{BEN}(t)$ = Benzene performance of target fuel in terms of percentage change from baseline.

BENZ(b) = Baseline benzene emissions as defined in paragraph (b)(2) of this section for the appropriate phase and season.

$N_b = \exp b_1(t)/\exp b_1(b)$

$H_b = \exp b_2(t)/\exp b_2(b)$

w_1 = Weighting factor for normal emitters as defined in paragraph (b)(1) of this section for the appropriate Phase.

w_2 = Weighting factor for higher emitters as defined in paragraph (b)(1) of this section for the appropriate Phase.

$b_1(t)$ = Normal emitter benzene equation, as defined in paragraph (e)(4)(i) of this section, evaluated using the target fuel's properties subject to paragraph (e)(4)(iii) of this section.

$b_2(t)$ = Higher emitter benzene equation as defined in paragraph (e)(4)(ii) of this section, evaluated using the target fuel's properties subject to paragraph (e)(4)(iii) of this section.

$b_1(b)$ = Normal emitter benzene equation as defined in paragraph (e)(4)(i) of this section, evaluated for the base fuel's properties.

$b_2(b)$ = Higher emitter benzene equation, as defined in paragraph (e)(4)(ii) of this section, evaluated for the base fuel's properties.

(i) *Consolidated equation for normal emitters.*

$$b_1 = (0.0006197 \times SUL) + (-0.003376 \times E200) + (0.0265500 \times ARO) + (0.2223900 \times BEN)$$

(ii) *Equation for higher emitters.*

$$b_2 = (-0.096047 \times OXY) + (0.0003370 \times SUL) + (0.0112510 \times E300) + (0.0118820 \times ARO) + (0.2223180 \times BEN)$$

(iii) If the aromatics value of the target fuel is less than 10 volume percent, then an aromatics value of 10 volume percent shall be used when evaluating the equations given in paragraphs (e)(4)(i) and (ii) of this section. If the E300 value of the target fuel is greater than 95 volume percent, then an E300 value of 95 volume percent shall be used when evaluating the equations in paragraphs (e)(4)(i) and (ii) of this section.

(5) Formaldehyde mass emissions shall be given by the following equation, subject to paragraphs (e)(5) (iii) and (iv) of this section:

$$FORM = FORM(b) + (FORM(b) \times Y_{FORM}(t) / 100)$$

$$Y_{FORM}(t) = [(w_1 \times N_f) + (w_2 \times H_f) - 1] \times 100$$

where

FORM = Exhaust formaldehyde emissions in terms of milligrams/mile.

$Y_{FORM}(t)$ = Formaldehyde performance of target fuel in terms of percentage change from baseline.

FORM(b) = Baseline formaldehyde emissions as defined in paragraph (b)(2) of this section for the appropriate Phase and season.

$N_f = \exp f_1(t)/\exp f_1(b)$

$H_f = \exp f_2(t)/\exp f_2(b)$

w_1 = Weighting factor for normal emitters as defined in paragraph (b)(1) of this section for the appropriate Phase.

w_2 = Weighting factor for higher emitters as defined in paragraph (b)(1) of this section for the appropriate Phase.

$f_1(t)$ = Normal emitter formaldehyde equation as defined in paragraph (e)(5)(i) of this section, evaluated using the target fuel's properties subject to paragraphs (e)(5) (iii) and (iv) of this section.

$f_2(t)$ = Higher emitter formaldehyde equation as defined in paragraph (e)(5)(ii) of this section, evaluated using the target fuel's properties subject to paragraphs (e)(5) (iii) and (iv) of this section.

$f_1(b)$ = Normal emitter formaldehyde equation as defined in paragraph (e)(5)(i) of this section, evaluated for the base fuel's properties.

$f_2(b)$ = Higher emitter formaldehyde equation as defined in paragraph (e)(5)(ii) of this section, evaluated for the base fuel's properties.

(i) *Consolidated equation for normal emitters.*

$$f_1 = (-0.010226 \times E300) + (-0.007166 \times ARO) + (0.0462131 \times MTB)$$

(ii) *Equation for higher emitters.*

$$f_2 = (-0.010226 \times E300) + (-0.007166 \times ARO) + (-0.031352 \times OLE) + (0.0462131 \times MTB)$$

(iii) If the aromatics value of the target fuel is less than 10 volume percent, then an aromatics value of 10 volume percent shall be used when evaluating the equations given in paragraphs (e)(5)(i) and (ii) of this section. If the E300 value of the target fuel is greater than 95 volume percent, then an E300 value

of 95 volume percent shall be used when evaluating the equations given in paragraphs (e)(5) (i) and (ii) of this section.

(iv) When calculating formaldehyde emissions and emissions performance, oxygen in the form of alcohols which are more complex or have higher molecular weights than ethanol shall be evaluated as if it were in the form of ethanol. Oxygen in the form of methyl ethers other than TAME and MTBE shall be evaluated as if it were in the form of MTBE. Oxygen in the form of ethyl ethers other than ETBE shall be evaluated as if it were in the form of ETBE. Oxygen in the form of non-methyl, non-ethyl ethers shall be evaluated as if it were in the form of ETBE. Oxygen in the form of methanol or non-alcohol, non-ether oxygenates shall not be evaluated with the Complex Model, but instead must be evaluated through vehicle testing per § 80.48.

(6) Acetaldehyde mass emissions shall be given by the following equation, subject to paragraphs (e)(6) (iii) and (iv) of this section:

$$ACET = ACET(b) + (ACET(b) \times Y_{ACET}(t)/100)$$

$$Y_{ACET}(t) = [(w_1 \times N_a) + (w_2 \times H_a) - 1] \times 100$$

where

ACET = Exhaust acetaldehyde emissions in terms of milligrams/mile

$Y_{ACET}(t)$ = Acetaldehyde performance of target fuel in terms of percentage change from baseline

ACET(b) = Baseline acetaldehyde emissions as defined in paragraph (b)(2) of this section for the appropriate phase and season

$N_a = \exp a_1(t)/\exp a_1(b)$

$H_a = \exp a_2(t)/\exp a_2(b)$

w_1 = Weighting factor for normal emitters as defined in paragraph (b)(1) of this section for the appropriate phase

w_2 = Weighting factor for higher emitters as defined in paragraph (b)(1) of this section for the appropriate phase

$a_1(t)$ = Normal emitter acetaldehyde equation as defined in paragraph (e)(6)(i) of this section, evaluated using the target fuel's properties, subject to paragraphs (e)(6) (iii) and (iv) of this section

$a_2(t)$ = Higher emitter acetaldehyde equation as defined in paragraph (e)(6)(ii) of this section, evaluated using the target fuel's properties, subject to paragraphs (e)(6) (iii) and (iv) of this section

$a_1(b)$ = Normal emitter acetaldehyde equation as defined in paragraph (e)(6)(i) of this section, evaluated for the base fuel's properties

$f_2(b)$ = Higher emitter acetaldehyde equation as defined in paragraph (e)(6)(ii) of this section, evaluated for the base fuel's properties

(i) *Consolidated equation for normal emitters.*

$$a_1 = (0.0002631 \times SUL) + (0.0397860 \times RVP) + (-0.012172 \times E300) + (-0.005525 \times ARO) + (-0.009594 \times MTB) + (0.3165800 \times ETB) + (0.2492500 \times ETH)$$

(ii) *Equation for higher emitters.*

$$a_2 = (0.0002627 \times SUL) + (-0.012157 \times E300) + (-0.005548 \times ARO) + (-0.055980 \times MTB) + (0.3164665 \times ETB) + (0.2493259 \times ETH)$$

(iii) If the aromatics value of the target fuel is less than 10 volume percent, then an aromatics value of 10 volume percent shall be used when evaluating the equations given in paragraphs (e)(6) (i) and (ii) of this section. If the E300 value of the target fuel is greater than 95 volume percent, then an E300 value of 95 volume percent shall be used when evaluating the equations given in paragraphs (e)(6) (i) and (ii) of this section.

(iv) When calculating acetaldehyde emissions and emissions performance, oxygen in the form of alcohols which are more complex or have higher molecular weights than ethanol shall be evaluated as if it were in the form of ethanol. Oxygen in the form of methyl ethers other than TAME and MTBE shall be evaluated as if it were in the form of MTBE. Oxygen in the form of ethyl ethers other than ETBE shall be evaluated as if it were in the form of ETBE. Oxygen in the form of non-methyl, non-ethyl ethers shall be evaluated as if it were in the form of ETBE. Oxygen in the form of methanol or non-alcohol, non-ether oxygenates shall not be evaluated with the Complex Model, but instead must be evaluated through vehicle testing per § 80.48.

(7) 1,3-butadiene mass emissions shall be given by the following equations, subject to paragraph (e)(7)(iii) of this section:

$$BUTA = BUTA(b) + (BUTA(b) \times Y_{BUTA}(t)/100)$$

$$Y_{BUTA}(t) = [(w_1 \times N_d) + (w_2 \times H_d) - 1] \times 100$$

where

BUTA = Exhaust 1,3-butadiene emissions in terms of milligrams/mile

$Y_{BUTA}(t)$ = 1,3-butadiene performance of target fuel in terms of percentage change from baseline

BUTA(b) = Baseline 1,3-butadiene emissions as defined in paragraph (b)(2) of this section for the appropriate phase and season

$N_d = \exp d_1(t)/\exp d_1(b)$

$H_d = \exp d_2(t)/\exp d_2(b)$

w_1 = eighting factor for normal emitters as defined in paragraph (b)(1) of this section for the appropriate phase

w_2 = Weighting factor for higher emitters as defined in paragraph (b)(1) of this section for the appropriate Phase.

$d_1(t)$ = Normal emitter 1,3-butadiene equation as defined in paragraph (e)(7)(i) of this section, evaluated using the target fuel's properties, subject to paragraph (e)(7)(iii) of this section.

$d_2(t)$ = Higher emitter 1,3-butadiene equation as defined in paragraph (e)(7)(ii) of this section, evaluated using the target fuel's properties, subject to paragraph (e)(7)(iii) of this section.

$d_1(b)$ = Normal emitter 1,3-butadiene equation as defined in paragraph (e)(7)(i) of this section, evaluated for the base fuel's properties.

$d_2(b)$ = Higher emitter 1,3-butadiene equation as defined in paragraph (e)(7)(ii) of this section, evaluated for the base fuel's properties.

(i) *Consolidated equation for normal emitters.*

$$d_1 = (0.0001552 \times SUL) + (-0.007253 \times E200) + (-0.014866 \times E300) + (-0.004005 \times ARO) + (0.0282350 \times OLE)$$

(ii) *Equation for higher emitters.*

$$d_2 = (-0.060771 \times OXY) + (-0.007311 \times E200) + (-0.008058 \times E300) + (-0.004005 \times ARO) + (0.0436960 \times OLE)$$

(iii) If the aromatics value of the target fuel is less than 10 volume percent, then an aromatics value of 10 volume percent shall be used when evaluating the equations given in paragraphs (e)(7)(i) and (ii) of this section. If the E300 value of the target fuel is greater than 95 volume percent, then an E300 value of 95 volume percent shall be used when evaluating the equations given in paragraphs (e)(7) (i) and (ii) of this section.

(8) Polycyclic organic matter mass emissions shall be given by the following equation:

$$POM = 0.003355 \times VOCE$$

POM = Polycyclic organic matter emissions in terms of milligrams per mile

VOCE = Non-methane, non-ethane exhaust emissions of volatile organic compounds in grams per mile.

(9) Nonexhaust benzene emissions in VOC Control Region 1 shall be given by the following equations for both Phase I and Phase II:

$$NEBZ1 = DIBZ1 + HSBZ1 + RLBZ1 + RFBZ1$$

$$HSBZ1 = 10 \times BEN \times VOCHS1 \times [(-0.0342 \times MTB) + (-0.080274 \times RVP) + 1.4448]$$

$$DIBZ1 = 10 \times BEN \times VOCD11 \times [(-0.0290 \times MTB) + (-0.080274 \times RVP) + 1.3758]$$

$$RLBZ1 = 10 \times BEN \times VOCRL1 \times [(-0.0342 \times MTB) + (-0.080274 \times RVP) + 1.4448]$$

$$RFBZ1 = 10 \times BEN \times VOCRF1 \times [(-0.0296 \times MTB) + (-0.081507 \times RVP) + 1.3972$$

where

NEBZ1 = Nonexhaust emissions of volatile organic compounds in VOC Control Region 1 in milligrams per mile.

DIBZ1 = Diurnal emissions of volatile organic compounds in VOC Control Region 1 in milligrams per mile.

HSBZ1 = Hot soak emissions of volatile organic compounds in VOC Control Region 1 in milligrams per mile.

RLBZ1 = Running loss emissions of volatile organic compounds in VOC Control Region 1 in milligrams per mile.

RFBZ1 = Refueling emissions of volatile organic compounds in VOC Control Region 1 in grams per mile.

VOCDI1 = Diurnal emissions of volatile organic compounds in VOC Control Region 1 in milligrams per mile, as determined in paragraph (c)(3) of this section.

VOCHS1 = Hot soak emissions of volatile organic compounds in VOC Control Region 1 in milligrams per mile, as determined in paragraph (c)(3) of this section.

VOCRL1 = Running loss emissions of volatile organic compounds in VOC Control Region 1 in milligrams per mile, as determined in paragraph (c)(3) of this section.

VOCRF1 = Refueling emissions of volatile organic compounds in VOC Control Region 1 in milligrams per mile, as determined in paragraph (c)(3) of this section.

(10) Nonexhaust benzene emissions in VOC Control Region 2 shall be given by the following equations for both Phase I and Phase II:

$$NEBZ2 = DIBZ2 + HSBZ2 + RLBZ2 + RFBZ2$$

$$HSBZ2 = 10 \times BEN \times VOCHS2 \times [(-0.0342 \times MTB) + (-0.080274 \times RVP) + 1.4448]$$

$$DIBZ2 = 10 \times BEN \times VOCD12 \times [(-0.0290 \times MTB) + (-0.080274 \times RVP) + 1.3758]$$

$$RLBZ2 = 10 \times BEN \times VOCRL2 \times [(-0.0342 \times MTB) + (-0.080274 \times RVP) + 1.4448]$$

$$RFBZ2 = 10 \times BEN \times VOCRF2 \times [(-0.0296 \times MTB) + (-0.081507 \times RVP) + 1.3972$$

where

NEBZ2 = Nonexhaust emissions of volatile organic compounds in VOC Control Region 2 in milligrams per mile.

DIBZ2 = Diurnal emissions of volatile organic compounds in VOC Control Region 2 in milligrams per mile.

HSBZ2 = Hot soak emissions of volatile organic compounds in VOC Control Region 2 in milligrams per mile.

RLBZ2 = Running loss emissions of volatile organic compounds in VOC Control Region 2 in milligrams per mile.

RFBZ2 = Refueling emissions of volatile organic compounds in VOC Control Region 2 in grams per mile.

VOCDI2 = Diurnal emissions of volatile organic compounds in VOC Control Region 2 in milligrams per mile, as determined in paragraph (c)(4) of this section.

VOCHS2 = Hot soak emissions of volatile organic compounds in VOC Control Region 2 in milligrams per mile, as determined in paragraph (c)(4) of this section.

VOCRL2 = Running loss emissions of volatile organic compounds in VOC Control Region 2 in milligrams per mile, as determined in paragraph (c)(4) of this section.

VOCRF2 = Refueling emissions of volatile organic compounds in VOC Control Region 2 in milligrams per mile, as determined in paragraph (c)(4) of this section.

(f) *Limits of the model.* (1) The equations described in paragraphs (c), (d), and (e) of this section shall be valid only for fuels with fuel properties that fall in the following ranges for reformulated gasolines and conventional gasolines:

(i) For reformulated gasolines:

Fuel property	Acceptable range
Oxygen	0.0–5.8 weight percent.
Sulfur	0.0–500.0 parts per million by weight.
RVP	6.4–10.0 pounds per square inch.
E200	30.0–70.0 percent evaporated.
E300	70.0–100.0 percent evaporated.
Aromatics	0.0–50.0 volume percent.
Olefins	0.0–25.0 volume percent.
Benzene	0.0–2.0 volume percent.

(ii) For conventional gasoline:

Fuel property	Acceptable range
Oxygen	0.0–5.8 weight percent.
Sulfur	0.0–1000.0 parts per million by weight.
RVP	6.4–11.0 pounds per square inch.
E200	30.0–70.0 evaporated percent.
E300	70.0–100.0 evaporated percent.
Aromatics	0.0–55.0 volume percent.
Olefins	0.0–30.0 volume percent.
Benzene	0.0–4.9 volume percent.

(2) Fuels with one or more properties that do not fall within the ranges described in above shall not be certified or evaluated for their emissions performance using the complex emissions model described in paragraphs (c), (d), and (e) of this section.

[59 FR 7813, Feb. 16, 1994, as amended at 59 FR 36959, July 20, 1994; 62 FR 68206, Dec. 31, 1997; 71 FR 74566, Dec. 15, 2005; 76 FR 44443, July 25, 2011]

§ 80.46 Measurement of reformulated gasoline fuel parameters.

(a) *Sulfur.* Sulfur content of gasoline and butane must be determined by use of the following methods:

(1) The sulfur content of gasoline must be determined by use of American Society for Testing and Materials (ASTM) standard method D2622 (incorporated by reference, see paragraph (h) of this section) or by one of the alternative methods specified in paragraph (a)(3) of this section.

(2) Beginning January 1, 2004, the sulfur content of butane must be determined by the use of ASTM standard test method D 6667–01, entitled, ''Standard Test Method for Determination of Total Volatile Sulfur in Gaseous Hydrocarbons and Liquefied Petroleum Gases by Ultraviolet Fluorescence'' or by the alternative method specified in paragraph (a)(4) of this section.

(3) Any refiner or importer may use any of the following methods for determining the sulfur content of gasoline; provided the refiner or importer test result is correlated with the method specified in paragraph (a)(1) of this section:

(i) ASTM standard method D5453 (incorporated by reference, see paragraph (h) of this section) or

(ii) ASTM standard method D6920 (incorporated by reference, see paragraph (h) of this section) or

(iii) ASTM standard method D3120 (incorporated by reference, see paragraph (h) of this section) or

(iv) ASTM standard method D7039 (incorporated by reference, see paragraph (h) of this section).

(4) Beginning January 1, 2004, any refiner or importer may determine the sulfur content of butane using any of the following methods; provided the refiner or importer test result is correlated with the method specified in paragraph (a)(2) of this section:

(i) ASTM standard method D 4468–85 (Reapproved 2000), ''Standard Test Method for Total Sulfur in Gaseous Fuels by Hydrogenolysis and Rateometric Colorimetry,'' or

(ii) ASTM standard method D 3246–96, entitled, ''Standard Test Method for Sulfur in Petroleum Gas by Oxidative Microcoulemetry.''

(b) *Olefins.* Olefin content must be determined by use of the following methods:

(1) Olefin content must be determined by use of ASTM standard method D1319 (incorporated by reference, see paragraph (h) of this section).

(2)(i) Any refiner or importer may determine olefin content using ASTM standard method ASTM D6550 (incorporated by reference, see paragraph (h) of this section) for purposes of meeting any testing requirement involving olefin content; provided that

(ii) The refiner or importer test result is correlated with the method specified in paragraph (b)(1) of this section on a site-specific basis, in order to achieve an unbiased prediction of the result in volume percent, for the method specified in paragraph (b)(1) of this section.

(c) *Reid vapor pressure (RVP).* Reid vapor pressure must be determined using ASTM standard test method ASTM D5191 (incorporated by reference, see paragraph (h) of this section), except that the following correlation equation must be used:

$$\text{RVP psi} = (0.956 * X) - 0.347$$

$$\text{RVP kPa} = (0.956 * X) - 2.39$$

(d) *Distillation.* Distillation parameters must be determined using ASTM standard test method D86 (incorporated by reference, see paragraph (h) of this section).

(e) *Benzene.* (1) Benzene content must be determined using ASTM standard test method ASTM D3606–07 (incorporated by reference, see paragraph (h) of this section), except that.

(2) Instrument parameters shall be adjusted to ensure complete resolution of the benzene, ethanol and methanol peaks because ethanol and methanol may cause interference with ASTM standard method D–3606–99 when present.

(f)(1) Aromatic content must be determined using ASTM D5769 (incorporated by reference, see paragraph (h) of this section), except that the sample chilling requirements in section 8 of this standard method are optional.

(2) [Reserved]

(3)(i) Any refiner or importer may determine aromatics content using ASTM standard method D1319 (incorporated by reference, see paragraph (h) of this section) for purposes of meeting any testing requirement involving aromatics content; provided that

(ii) The refiner or importer test result is correlated with the method specified in paragraph (f)(1) of this section.

(g) *Oxygen and oxygenate content analysis.* (1) Oxygen and oxygenate content must be determined using ASTM standard method D5599 (incorporated by reference, see paragraph (h) of this section).

(2)(i) When oxygenates present are limited to MTBE, ETBE, TAME, DIPE, tertiary-amyl alcohol and C_1 to C_4 alcohols, any refiner, importer, or oxygenate blender may determine oxygen and oxygen content using ASTM standard method D4815 (incorporated by reference, see paragraph (h) of this section) for purposes of meeting any testing requirement; provided that:

(ii) The refiner or importer test result is correlated with the method specified in paragraph (g)(1) of this section.

(h) *Materials incorporated by reference.* The Director of the Federal Register approved the incorporation by reference of the documents listed in this section as prescribed in 5 U.S.C. 552(a) and 1 CFR 51. Anyone may inspect copies at the U.S. EPA, Air and Radiation

Docket and Information Center, 1301 Constitution Ave., NW., Room B102, EPA West Building, Washington, DC, 20460, under EPA docket ID Number EPA–HQ–OAR–2008–0558, or at the National Archives and Records Administration (NARA). The telephone number for the Air Docket Public Reading Room is (202) 566–1742. For information on the availability of this material at NARA, call 202–741–6030 or go to: *http://www.archives.gov/federal_register/code_of_federal_regulations/ibr_locations.html*. For further information on these test methods, please contact the Environmental Protection Agency at 734–214–4582.

(1) *ASTM material.* Anyone may purchase copies of these materials from the American Society for Testing and Materials (ASTM), 100 Barr Harbor Dr., West Conshohocken, PA 19428–2959, or by contacting ASTM customer service at 610–832–9585, or by contacting the email address of *service@astm.org* from the ASTM Web site of *http://www.astm.org*.

(i) ASTM standard method D3606–07 (''ASTM D3606''), Standard Test Method for Determination of Benzene and Toluene in Finished Motor and Aviation Gasoline by Gas Chromatography, approved November 1, 2007.

(ii) ASTM standard method D1319–03^{e1} (''ASTM D1319''), Standard Test Method for Hydrocarbon Types in Liquid Petroleum Products by Fluorescent Indicator Adsorption, approved November 1, 2003.

(iii) ASTM standard method D6550–05 (''ASTM D6550''), Standard Test Method for Determination of Olefin Content of Gasolines by Supercritical-Fluid Chromatography, approved November 1, 2005.

(iv) ASTM standard method D4815–04 (''ASTM D4815''), Standard Test Method for Determination of MTBE, ETBE, TAME, DIPE, tertiary-Amyl Alcohol and C_1 to C_4 Alcohols in Gasoline by Gas Chromatography, approved November 1, 2004.

(v) ASTM standard method D2622–05 (''ASTM D2622''), Standard Test Method for Sulfur in Petroleum Products by Wavelength Dispersive X-Ray Fluorescence Spectrometry, approved November 1, 2005.

(vi) ASTM standard method D3246–96 (''ASTM D3246''), Standard Test Method for Sulfur in Petroleum Gas by Oxidative Microcoulometry.

(vii) ASTM standard method D5191–07 (''ASTM D5191''), Standard Test Method for Vapor Pressure of Petroleum Products (Mini Method), approved May 1, 2007.

(viii) ASTM standard method D5599–00(2005) (''ASTM D5599''), Standard Test Method for Determination of Oxygenates in Gasoline by Gas Chromatography and Oxygen Selective Flame Ionization Detection, approved November 1, 2005.

(ix) ASTM standard method D5769–04 (''ASTM D5769''), Standard Test Method for Determination of Benzene, Toluene, and Total Aromatics in Finished Gasolines by Gas Chromatography/Mass Spectrometry, approved May 1, 2004.

(x) ASTM standard method D86–07b (''ASTM D86''), Standard Test Method for Distillation of Petroleum Products at Atmospheric Pressure, approved November 15, 2007.

(xi) ASTM standard method D5453–08a (''ASTM D5453''), Standard Test Method for Determination of Total Sulfur in Light Hydrocarbons, Spark Ignition Engine Fuel, Diesel Engine Fuel, and Engine Oil by Ultraviolet Fluorescence, approved February 1, 2008.

(xii) ASTM standard method D6920–07 (''ASTM D6920''), Standard Test Method for Total Sulfur in Naphthas, Distillates, Reformulated Gasolines, Diesels, Biodiesels, and Motor Fuels by Oxidative Combustion and Electrochemical Detection, approved December 1, 2007.

(xiii) ASTM standard method D3120–06^{e1} (''ASTM D3120''), Standard Test Method for Trace Quantities of Sulfur in Light Petroleum Hydrocarbons by Oxidative Microcoulometry, approved December 1, 2006.

(xiv) ASTM standard method D7039–07 (''ASTM D7039''), Standard Test Method for Sulfur in Gasoline and Diesel Fuel by Monochromatic Wavelength Dispersive X-ray Fluorescence Spectrometry, approved May 1, 2007.

(xv) ASTM standard method D6667–01 (''ASTM D6667''), Standard Test Method for Determination of Total Volatile

Sulfur in Gaseous Hydrocarbons and Liquefied Petroleum Gases by Ultraviolet Fluorescence.

(xvi) ASTM standard method D4468–85 (reapproved 2000) (''ASTM D4468''), Standard Test Method for Total Sulfur in Gaseous Fuels by Hydrogenolysis and Rateometric Colorimetry.

(2) [Reserved]

[59 FR 7813, Feb. 16, 1994, as amended at 59 FR 36961, July 20, 1994; 61 FR 58306, Nov. 13, 1996; 63 FR 63793, Nov. 17, 1998; 65 FR 6822, Feb. 10, 2000; 65 FR 53189, Sept. 1, 2000; 66 FR 17263, Mar. 29, 2001; 67 FR 8737, Feb. 26, 2002; 67 FR 40181, June 12, 2002; 68 FR 56781, Oct. 2, 2003; 68 FR 57819, Oct. 7, 2003; 71 FR 16499, Apr. 3, 2006; 73 FR 74355, Dec. 8, 2008; 74 FR 6233, Feb. 6, 2009; 76 FR 65385, Oct. 21, 2011]

§ 80.47 [Reserved]

§ 80.48 Augmentation of the complex emission model by vehicle testing.

(a) The provisions of this section apply only if a fuel claims emission reduction benefits from fuel parameters that are not included in the complex emission model or complex emission model database, or if the values of fuel parameters included in the complex emission model set forth in § 80.45 fall outside the range of values for which the complex emission model is deemed valid.

(b) To augment the complex emission model described at § 80.45, the following requirements apply:

(1) The petitioner must obtain prior approval from the Administrator for the design of the test program before beginning the vehicle testing process. To obtain approval, the petitioner must at minimum provide the following information: the fuel parameter to be evaluated for emission effects; the number and description of vehicles to be used in the test fleet, including model year, model name, vehicle identification number (VIN), mileage, emission performance (exhaust THC emission level), technology type, and manufacturer; a description of the methods used to procure and prepare the vehicles; the properties of the fuels to be used in the testing program (as specified at § 80.49); the pollutants and emission categories intended to be evaluated; the precautions used to ensure that the effects of the parameter in question are independent of the effects of other parameters already included in the model; a description of the quality assurance procedures to be used during the test program; the statistical analysis techniques to be used in analyzing the test data, and the identity and location of the organization performing the testing.

(2) Exhaust emissions shall be measured per the requirements of this section and §§ 80.49 through 80.62.

(3) The nonexhaust emission model (including evaporative, running loss, and refueling VOC and toxics emissions) shall not be augmented by vehicle testing.

(4) The Agency reserves the right to observe and monitor any testing that is performed pursuant to the requirements of this section.

(5) The Agency reserves the right to evaluate the quality and suitability of data submitted pursuant to the requirements of this section and to reject, re-analyze, or otherwise evaluate such data as is technically warranted.

(6) Upon a showing satisfactory to the Administrator, the Administrator may approve a petition to waive the requirements of this section and § 80.49, § 80.50(a), § 80.60(d)(3), and § 80.60(d)(4) in order to better optimize the test program to the needs of the particular fuel parameter. Any such waiver petition should provide information justifying the requested waiver, including an acceptable rationale and supporting data. Petitioners must obtain approval from the Administrator prior to conducting testing for which the requirements in question are waived. The Administrator may waive the noted requirements in whole or in part, and may impose appropriate conditions on any such waiver.

(c) In the case of petitions to augment the complex model defined at § 80.45 with a new parameter, the effect of the parameter being tested shall be determined separately, for each pollutant and for each emitter class category. If the parameter is not included in the complex model but is represented in whole or in part by one or more parameters included in the model, the petitioner shall be required to demonstrate the emission effects of the parameter in question independent of the effects of the already-included

parameters. The petitioner shall also have to demonstrate the effects of the already-included parameters independent of the effects of the parameter in question. The emission performance of each vehicle on the fuels specified at § 80.49, as measured through vehicle testing in accordance with § 80.50 through § 80.62, shall be analyzed to determine the effects of the fuel parameter being tested on emissions according to the following procedure:

(1) The analysis shall fit a regression model to the natural logarithm of emissions measured from addition fuels 1, 2, and 3 only (as specified at § 80.49(a) and adjusted as per paragraph (c)(1)(iv) of this section and § 80.49(d)) that includes the following terms:

(i) A term for each vehicle that shall reflect the effect of the vehicle on emissions independent of fuel compositions. These terms shall be of the form $D_i \times V_i$, where D_i is the coefficient for the term and V_i is a dummy variable which shall have the value 1.0 for the ith vehicle and the value 0 for all other vehicles.

(ii) A linear term in the parameter being tested for each emitter class, of the form $A_i \times (P_1 - P_1\ (avg)) \times E_i$, where A_i is the coefficient for the term, P_1 is the level of the parameter in question, P_1 (avg) is the average level of the parameter in question for all seven test fuels specified at § 80.49(a)(1), and E_i is a dummy variable representing emitter class, as defined at § 80.62. For normal emitters, $E_1 = 1$ and $E_2 = 0$. For higher emitters, $E_1 = 0$ and $E_2 = 1$.

(iii) For the VOC and NO_X models, a squared term in the parameter being tested for each emitter class, of the form $B_i \times (P_1 - P_1\ (avg))^2 \times E_i$, where B_i is the coefficient for the term and where P_1 , P_1 (avg), and E_i are as defined in paragraph (c)(1)(ii) of this section.

(iv) To the extent that the properties of fuels 1, 2, and 3 which are incorporated in the complex model differ in value among the three fuels, the complex model shall be used to adjust the observed emissions from test vehicles on those fuels to compensate for those differences prior to fitting the regression model.

(v) The A_i and B_i terms and coefficients developed by the regression described in this paragraph (c) shall be evaluated against the statistical criteria defined in paragraph (e) of this section. If both terms satisfy these criteria, then both terms shall be retained. If the B_i term satisfies these criteria and the A_i term does not, then both terms shall be retained. If the B_i term does not satisfy these criteria, then the B_i term shall be dropped from the regression model and the model shall be re-estimated. If, after dropping the B_i term and re-estimating the model, the A_i term does not satisfy these criteria, then both terms shall be dropped, all test data shall be reported to EPA, and the augmentation request shall be denied.

(2) After completing the steps outlined in paragraph (c)(1) of this section, the analysis shall fit a regression model to a combined data set that includes vehicle testing results from all seven addition fuels specified at § 80.49(a), the vehicle testing results used to develop the model specified at § 80.45, and vehicle testing results used to support any prior augmentation requests which the Administrator deems necessary.

(i) The analysis shall fit the regression models described in paragraphs (c)(2) (ii) through (v) of this section to the natural logarithm of measured emissions.

(ii) All regressions shall include a term for each vehicle that shall reflect the effect of the vehicle on emissions independent of fuel compositions. These terms shall be of the form $D_i \times V_i$, where D_i is the coefficient for the term and V_i is a dummy variable which shall have the value 1.0 for the ith vehicle and the value 0 for all other vehicles. Vehicles shall be represented by separate terms for each test program in which they were tested. The vehicle terms for the vehicles included in the test program undertaken by the petitioner shall be calculated based on the results from all seven fuels specified at § 80.49(a). Note that the D_i estimates for the petitioner's test vehicles in this regression are likely to differ from the D_i estimates discussed in paragraph (c)(1)(i) of this section since they will be based on a different set of fuels.

(iii) All regressions shall include existing complex model terms and their

coefficients, including those augmentations that the Administrator deems necessary. All terms and coefficients shall be expressed in centered form. The Administrator shall make available upon request existing complex model terms and coefficients in centered form.

(iv) All regressions shall include the linear and squared terms, and their coefficients, estimated in the final regression model described in paragraph (c)(1) of this section.

(v) The VOC and NO_X regressions shall include those interactive terms with other fuel parameters, of the form $C_{i(1,j)} \times (P_1 - P_1 \text{ (avg)}) \times (P_j - P_j \text{ (avg)}) \times E_i$, where $C_{i(1,j)}$ is the coefficient for the term, P_1 is the level of the parameter being added to the model, P_1 (avg) is the average level of the parameter being added for all seven addition fuels specified at § 80.49(a), P_j is the level of the other fuel parameter, P_j (avg) is the centering value for the other fuel parameter used to develop the complex model or used in the other parameter's augmentation study, and E_i is as defined in paragraph (c)(1) of this section, which are found to satisfy the statistical criteria defined in paragraph (e) of this section. Such terms shall be added to the regression model in a stepwise manner.

(3) The model described in paragraphs (c) (1) and (2) of this section shall be developed separately for normal-emitting and higher-emitting vehicles. Each emitter class shall be treated as a distinct population for the purposes of determining regression coefficients.

(4) Once the augmented models described in paragraphs (c) (1) through (3) of this section have been developed, they shall be converted to an uncentered form through appropriate algebraic manipulation.

(5) The augmented model described in paragraph (c)(4) of this section shall be used to determine the effects of the parameter in question at levels between the levels in Fuels 1 and 3, as defined at § 80.49(a)(1), for all fuels which claim emission benefits from the parameter in question.

(d)(1) In the case of petitions to augment the complex model defined at § 80.45 by extending the range of an existing complex model parameter, the effect of the parameter being tested shall be determined separately, for each pollutant and for each technology group and emitter class category, at levels between the extension level and the nearest limit of the core of the data used to develop the unaugmented complex model as follows:

Fuel parameter	Data core limits	
	Lower	Upper
Sulfur, ppm	10	450
RVP, psi	7	10
E200, vol %	33	66
E300, vol %	72	94
Aromatics, vol %	18	46
Benzene, vol %	0.4	1.8
Olefins, vol %	1	19
Oxygen, wt %.		
As ethanol	0	3.4
All others:	0	2.7

(2) The emission performance of each vehicle on the fuels specified at § 80.49(b)(2), as measured through vehicle testing in accordance with §§ 80.50 through 80.62, shall be analyzed to determine the effects of the fuel parameter being tested on emissions according to the following procedure:

(i) The analysis shall incorporate the vehicle testing data from the extension fuels specified at § 80.49(b), the vehicle testing results used to develop the model specified at § 80.45, and vehicle testing results used to support any prior augmentation requests which the Administrator deems necessary. A regression incorporating the following terms shall be fitted to the natural logarithm of emissions contained in this combined data set:

(A) A term for each vehicle that shall reflect the effect of the vehicle on emissions independent of fuel compositions. These terms shall be of the form $D_i \times V_i$, where D_i is the coefficient for the term and V_i is a dummy variable which shall have the value 1.0 for the ith vehicle and the value 0 for all other vehicles. Vehicles shall be represented by separate terms for each test program in which they were tested. The vehicle terms for the vehicles included in the test program undertaken by the petitioner shall be calculated based on the results from all three fuels specified at § 80.49(b)(2).

(B) Existing complex model terms that do not include the parameter being extended and their coefficients,

including those augmentations that the Administrator deems necessary. The centering values for these terms shall be identical to the centering values used to develop the complex model described at § 80.45.

(C) Existing complex model terms that include the parameter being extended. The coefficients for these terms shall be estimated by the regression. The centering values for these terms shall be identical to the centering values used to develop the complex model described at § 80.45.

(D) If the unaugmented VOC or NO_X complex models do not contain a squared term for the parameter being extended, such a term should be added in a stepwise fashion after completing the model described in paragraphs (d)(2)(i)(A) through (C) of this section. The coefficient for this term shall be estimated by the regression. The centering value for this term shall be identical to the centering value used to develop the complex model described at § 80.45.

(E) The terms defined in paragraphs (d)(2)(i)(C) and (D) of this section shall be evaluated against the statistical criteria defined in paragraph (e) of this section.

(ii) The model described in paragraph (d)(2)(i) of this section shall be developed separately for normal-emitting and higher-emitting vehicles, as defined at § 80.62. Each emitter class shall be treated as a distinct population for the purposes of determining regression coefficients.

(e) *Statistical criteria.* (1) The petitioner shall be required to submit evidence with the petition which demonstrates the statistical validity of the regression described in paragraph (c) or (d) of this section, including at minimum:

(i) Evidence demonstrating that colinearity problems are not severe, including but not limited to variance inflation statistics of less than 10 for the second-order and interactive terms included in the regression model.

(ii) Evidence demonstrating that the regression residuals are normally distributed, including but not limited to the skewness and Kurtosis statistics for the residuals.

(iii) Evidence demonstrating that overfitting and underfitting risks have been balanced, including but not limited to the use of Mallow's C_p criterion.

(2) The petitioner shall be required to submit evidence with the petition which demonstrates that the appropriate terms have been included in the regression, including at minimum:

(i) Descriptions of the analysis methods used to develop the regressions, including any computer code used to analyze emissions data and the results of regression runs used to develop the proposed augmentation, including intermediate regressions produced during the stepwise regression process.

(ii) Evidence demonstrating that the significance level used to include terms in the model was equal to 0.90.

(f) The complex emission model shall be augmented with the results of vehicle testing as follows:

(1) The terms and coefficients determined in paragraph (c) or (d) of this section shall be used to supplement the complex emission model equation for the corresponding pollutant and emitter category. These terms and coefficients shall be weighted to reflect the contribution of the emitter category to in-use emissions as shown at § 80.45.

(2) If the candidate parameter is not included in the unaugmented complex model and is not represented in whole or in part by one or more parameters included in the model, the modification shall be accomplished by adding the terms and coefficients to the complex model equation for that pollutant, technology group, and emitter category.

(3) If the parameter is included in the complex model but is being tested at levels beyond the current range of the model, the terms and coefficients determined in paragraph (d) of this section shall be used to supplement the complex emission model equation for the corresponding pollutant.

(i) The terms and coefficients of the complex model described at § 80.45 shall be used to evaluate the emissions performance of fuels with levels of the parameter being tested that are within the valid range of the model, as defined at § 80.45.

(ii) The emissions performance of fuels with levels of the parameter that

are beyond the valid range of the unaugmented model shall be given in percentage change terms by 100 − [(100 + A) × (100 + C) / (100 + B)], where:

(A) ''A'' shall be set equal to the percentage change in emissions for a fuel with identical fuel property values to the fuel being evaluated except for the parameter being extended, which shall be set equal to the nearest limit of the data core, using the unaugmented complex model.

(B) ''B'' shall be set equal to the percentage change in emissions for the fuel described in paragraph (f)(3)(i) of this section according to the augmented complex model.

(C) ''C'' shall be set equal to the percentage change in emissions of the actual fuel being evaluated using the augmented complex model.

(g) EPA reserves the right to analyze the data generated during vehicle testing, to use such analyses to determine the validity of other augmentation petitions, and to use such data to update the complex model for use in certifying all reformulated gasolines.

(h) Duration of acceptance of emission effects determined through vehicle testing:

(1) If the Agency does not accept, modify, or reject a particular augmentation for inclusion in an updated complex model (performed through rulemaking), then the augmentation shall remain in effect until the next update to the complex model takes effect.

(2) If the Agency does reject or modify a particular augmentation for inclusion in an updated complex model, then the augmentation shall no longer be able to be used as of the date the updated complex model is deemed to take effect, unless the following conditions and limitations apply:

(i) The augmentation in question may continue to be used by those fuel suppliers which can prove, to the Administrator's satisfaction, that the fuel supplier had already begun producing a fuel utilizing the augmentation at the time the revised model is promulgated.

(ii) The augmentation in question may only be used to evaluate the emissions performance of fuels in conjunction with the complex emission model in effect as of the date of production of the fuels.

(iii) The augmentation may only be used for three years of fuel production, or a total of five years from the date the augmentation first took effect, whichever is shorter.

(3) The Administrator shall determine when sufficient new information on the effects of fuel properties on vehicle emissions has been obtained to warrant development of an updated complex model.

[59 FR 7813, Feb. 16, 1994, as amended at 59 FR 36962, July 20, 1994]

§ 80.49 Fuels to be used in augmenting the complex emission model through vehicle testing.

(a) Seven fuels (hereinafter called the ''addition fuels'') shall be tested for the purpose of augmenting the complex emission model with a parameter not currently included in the complex emission model. The properties of the addition fuels are specified in paragraphs (a)(1) and (2) of this section. The addition fuels shall be specified with at least the same level of detail and precision as in paragraph (a)(5)(i) of this section, and this information must be included in the petition submitted to the Administrator requesting augmentation of the complex emission model.

(1) The seven addition fuels to be tested when augmenting the complex model specified at § 80.45 with a new fuel parameter shall have the properties specified as follows:

PROPERTIES OF FUELS TO BE TESTED WHEN AUGMENTING THE MODEL WITH A NEW FUEL PARAMETER

Fuel property	Fuels						
	1	2	3	4	5	6	7
Sulfur, ppm	150	150	150	35	35	500	500
Benzene, vol %	1.0	1.0	1.0	0.5	0.5	1.3	1.3
RVP, psi	7.5	7.5	7.5	6.5	6.5	8.1	8.1
E200, %	50	50	50	62	62	37	37
E300, %	85	85	85	92	92	79	79

PROPERTIES OF FUELS TO BE TESTED WHEN AUGMENTING THE MODEL WITH A NEW FUEL PARAMETER—Continued

Fuel property	Fuels						
	1	2	3	4	5	6	7
Aromatics, vol %	27	27	27	20	20	45	45
Olefins, vol %	9.0	9.0	9.0	2.0	2.0	18	18
Oxygen, wt %	2.1	2.1	2.1	2.7	2.7	1.5	1.5
Octane, (R+M)/2	87	87	87	87	87	87	87
New Parameter [1]	C	(C+B)/2	B	C	B	C	B

[1] C = Candidate level, B = Baseline level.

(i) For the purposes of vehicle testing, the ''baseline'' level of the parameter shall refer to the level of the parameter in Clean Air Act baseline gasoline. The ''candidate'' level of the parameter shall refer to the most extreme value of the parameter, relative to baseline levels, for which the augmentation shall be valid.

(ii) If the fuel parameter for which the fuel supplier is petitioning EPA to augment the complex emission model (hereinafter defined as the ''candidate parameter'') is not specified for Clean Air Act summer baseline fuel, then the baseline level for the candidate parameter shall be set at the levels found in typical gasoline. This level and the justification for this level shall be included in the petitioner's submittal to EPA prior to initiating the test program, and EPA must approve this level prior to the start of the program.

(iii) If the candidate parameter is not specified for Clean Air Act summer baseline fuel, and is not present in typical gasoline, its baseline level shall be zero.

(2) The addition fuels shall contain detergent control additives in accordance with section 211(l) of the Clean Air Act Amendments of 1990 and the associated EPA requirements for such additives.

(3) The addition fuels shall be specified with at least the same level of detail and precision as in paragraph (a)(5)(i) of this section, and this information shall be included in the petition submitted to the Administrator requesting augmentation of the complex emission model.

(i) Paraffin levels in Fuels 1 and 2 shall be altered from the paraffin level in Fuel 3 to compensate for the addition or removal of the candidate parameter, if necessary. Paraffin levels in Fuel 4 shall be altered from the paraffin level in Fuel 5 to compensate for the addition or removal of the candidate parameter, if necessary. Paraffin levels in Fuel 6 shall be altered from the paraffin level in Fuel 7 to compensate for the addition or removal of the candidate parameter, if necessary.

(ii) Other properties of Fuels 4 and 6 shall not vary from the levels for Fuels 5 and 7, respectively, unless such variations are the naturally-occurring result of the changes described in paragraphs (a)(1) and (2) of this section. Other properties of Fuels 1 and 2 shall not vary from the levels for Fuel 3, unless such variations are the naturally-occurring result of the changes described in paragraphs (a)(1) and (2) of this section.

(iii) The addition fuels shall be specified with at least the same level of detail and precision as defined in paragraph (a)(5)(i) of this section, and this information must be included in the petition submitted to the Administrator requesting augmentation of the complex emission model.

(4) The properties of the addition fuels shall be within the blending tolerances defined in this paragraph (a)(4) relative to the values specified in paragraphs (a)(1) and (2) of this section. Fuels that do not meet these tolerances shall require the approval of the Administrator to be used in vehicle testing to augment the complex emission model:

Fuel parameter	Blending tolerance
Sulfur content	±25 ppm.
Benzene content	±0.2 vol %.
RVP	±0.2 psi.
E200 level	±2 %.
E300 level	±4 %.
Oxygenate content	±1.0 vol %.

Fuel parameter	Blending tolerance
Aromatics content	±2.7 vol %.
Olefins content	±2.5 vol %.
Saturates content	±2.0 vol %.
Octane	±0.5.
Detergent control additives	±10% of the level required by EPA's detergents rule.
Candidate parameter	To be determined as part of the augmentation process.

(5) The composition and properties of the addition fuels shall be determined by averaging a series of independent tests of the properties and compositional factors defined in paragraph (a)(5)(i) of this section as well as any additional properties or compositional factors for which emission benefits are claimed.

(i) The number of independent tests to be conducted shall be sufficiently large to reduce the measurement uncertainty for each parameter to a sufficiently small value. At a minimum the 95% confidence limits (as calculated using a standard t-test) for each parameter must be within the following range of the mean measured value of each parameter:

Fuel parameter	Measurement uncertainty
API gravity	±0.2°API
Sulfur content	±10 ppm
Benzene content	±0.02 vol %
RVP	±0.05 psi
Octane	±0.2 (R+M/2)
E200 level	±2%
E300 level	±2%
Oxygenate content	±0.2 vol %
Aromatics content	±0.5 vol %
Olefins content	±0.3 vol %
Saturates content	±1.0 vol %
Detergent control Additives.	±2% of the level required by EPA's detergents rule.

(ii) The 95% confidence limits for measurements of fuel parameters for which emission reduction benefits are claimed and for which tolerances are not defined in paragraph (a)(5)(i) of this section must be within ±5% of the mean measured value.

(iii) Each test must be conducted in the same laboratory in accordance with the procedures outlined at § 80.46.

(b) Three fuels (hereinafter called ''extention fuels'') shall be tested for purpose of extending the valid range of the complex emission model for a parameter currently included in the complex emission model. The properties of the extension fuels are specified in paragraphs (b)(2) through (4) of this section. The extension fuels shall be specified with at least the same level of detail and precision as in paragraph (a)(5)(i) of this section, and this information must be included in the petition submitted to the Administrator requesting augmentation of the complex emission model. Each set of three extension fuels shall be used only to extend the range of a single complex model parameter.

(1) The ''extension level'' shall refer to the level to which the parameter being tested is to be extended. The three fuels to be tested when extending the range of fuel parameters already included in the complex model or a prior augmentation to the complex model shall be referred to as ''extension fuels.''

(2) The composition and properties of the extension fuels shall be as described in paragraphs (b)(2) (i) and (ii) of this section.

(i) The extension fuels shall have the following levels of the parameter being extended:

LEVEL OF EXISTING COMPLEX MODEL PARAMETERS BEING EXTENDED

Fuel property being extended	Extension fuel No. 1	Extension fuel No. 2	Extension fuel No. 3
Sulfur, ppm	Extension level	80	450
Benzene, vol %	Extension level	0.5	1.5
RVP, psi	Extension level	6.7	8.0
E200, %	Extension level	38	61
E300, %	Extension level	78	92
Aromatics, vol %	Extension level	20	45
Olefins, vol %	Extension level	3.0	18
Oxygen, wt %	Extension level	1.7	2.7
Octane, R+M/2	87	87	87

(ii) The levels of parameters other than the one being extended shall be given by the following table for all three extension fuels:

LEVELS FOR FUEL PARAMETERS OTHER THAN THOSE BEING EXTENDED

Fuel property	Extension fuel No. 1	Extension fuel No. 2	Extension fuel No. 3
Sulfur, ppm	150	150	150
Benzene, vol %	1.0	1.0	1.0
RVP, psi	7.5	7.5	7.5
E200, %	50	50	50
E300, %	85	85	85
Aromatics, vol %	25	25	25
Olefins, vol %	9.0	9.0	9.0
Oxygen, wt %	2.0	2.0	2.0
Octane, R+M/2	87	87	87

(3) If the Complex Model for any pollutant includes one or more interactive terms involving the parameter being extended, then two additional extension fuels shall be required to be tested for each such interactive term. These additional extension fuels shall have the following properties:

(i) The parameter being tested shall be present at its extension level.

(ii) The interacting parameter shall be present at the levels specified in paragraph (b)(2)(i) of this section for extension Fuels 2 and 3.

(iii) All other parameters shall be present at the levels specified in paragraph (b)(2)(ii) of this section.

(4) All extension fuels shall contain detergent control additives in accordance with Section 211(l) of the Clean Air Act Amendments of 1990 and the associated EPA requirements for such additives.

(c) The addition fuels defined in paragraph (a) of this section and the extension fuels defined in paragraph (b) of this section shall meet the following requirements for blending and measurement precision:

(1) The properties of the test and extension fuels shall be within the blending tolerances defined in this paragraph (c) relative to the values specified in paragraphs (a) and (b) of this section. Fuels that do not meet the following tolerances shall require the approval of the Administrator to be used in vehicle testing to augment the complex emission model:

Fuel parameter	Blending tolerance
Sulfur content	±25 ppm.
Benzene content	±0.2 vol %.
RVP	±0.2 psi.
E200 level	±2 %.
E300 level	±4 %.
Oxygenate content	±1.5 vol %.
Aromatics content	±2.7 vol %.
Olefins content	±2.5 vol %.
Saturates content	±2.0 vol %.
Octane	±0.5.
Candidate parameter	To be determined as part of the augmentation process.

(2) The extension and addition fuels shall be specified with at least the same level of detail and precision as defined in paragraph (c)(2)(ii) of this section, and this information must be included in the petition submitted to the Administrator requesting augmentation of the complex emission model.

(i) The composition and properties of the addition and extension fuels shall be determined by averaging a series of independent tests of the properties and compositional factors defined in paragraph (c)(2)(ii) of this section as well as any additional properties or compositional factors for which emission benefits are claimed.

(ii) The number of independent tests to be conducted shall be sufficiently large to reduce the measurement uncertainty for each parameter to a sufficiently small value. At a minimum the 95% confidence limits (as calculated using a standard t-test) for each parameter must be within the following range of the mean measured value of each parameter:

Fuel parameter	Measurement uncertainty
API gravity	±0.2 °API.
Sulfur content	±5 ppm.
Benzene content	±0.05 vol %.
RVP	±0.08 psi.
Octane	±0.1 (R+M/2).
E200 level	±2 %.
E300 level	±2 %.
Oxygenate content	±0.2 vol %.
Aromatics content	±0.5 vol %.
Olefins content	±0.3 vol %.
Saturates content	±1.0 vol.%
Octane	±0.2.
Candidate parameter	To be determined as part of the augmentation process.

(iii) Petitioners shall obtain approval from EPA for the 95% confidence limits for measurements of fuel parameters for which emission reduction benefits are claimed and for which tolerances are not defined in paragraph (c)(2)(i) of this section.

(iv) Each test must be conducted in the same laboratory in accordance with the procedures outlined at § 80.46.

(v) The complex emission model described at § 80.45 shall be used to adjust the emission performance of the addition and extension fuels to compensate for differences in fuel compositions that are incorporated in the complex model, as described at § 80.48. Compensating adjustments for naturally-resulting variations in fuel parameters shall also be made using the complex model. The adjustment process is described in paragraph (d) of this section.

(d) The complex emission model described at § 80.45 shall be used to adjust

the emission performance of addition and extension fuels to compensate for differences in fuel parameters other than the parameter being tested. Compensating adjustments for naturally-resulting variations in fuel parameters shall also be made using the complex model. These adjustments shall be calculated as follows:

(1) Determine the exhaust emissions performance of the actual addition or extension fuels relative to the exhaust emissions performance of Clean Air Act baseline fuel using the complex model. For addition fuels, set the level of the parameter being tested at baseline levels for purposes of emissions performance evaluation using the complex model. For extension fuel #1, set the level of the parameter being extended at the level specified in extension fuel #2. Also determine the exhaust emissions performance of the addition fuels specified in paragraph (a)(1) of this section with the level of the parameter being tested set at baseline levels.

(2) Calculate adjustment factors for each addition fuel as follows:

(i) Adjustment factors shall be calculated using the formula:

$$A = \frac{[1+(P(\text{actual})/100)]}{[1+(P(\textit{nominal})/100)]}$$

where

A = the adjustment factor

P(actual) = the performance of the actual fuel used in testing according to the complex model

P(nominal) = the performance that would have been achieved by the test fuel defined in paragraph (a)(1) of this section according to the complex model (as described in paragraph (d)(1) of this section).

(ii) Adjustment factors shall be calculated for each pollutant and for each emitter class.

(3) Multiply the measured emissions from each vehicle by the corresponding adjustment factor for the appropriate addition or extension fuel, pollutant, and emitter class. Use the resulting adjusted emissions to conduct all modeling and emission effect estimation activities described in § 80.48.

(e) All fuels included in vehicle testing programs shall have an octane number of 87.5, as measured by the (R+M)/2 method following the ASTM D4814 procedures, to within the measurement and blending tolerances specified in paragraph (c) of this section.

(f) A single batch of each addition or extension fuel shall be used throughout the duration of the testing program.

[59 FR 7813, Feb. 16, 1994, as amended at 59 FR 36962, July 20, 1994; 71 FR 74567, Dec. 15, 2005]

§ 80.50 General test procedure requirements for augmentation of the emission models.

(a) The following test procedure must be followed when testing to augment the complex emission model described at § 80.45.

(1) VOC, NO_X, CO, and CO_2 emissions must be measured for all fuel-vehicle combinations tested.

(2) Toxics emissions must be measured when testing the extension fuels per the requirements of § 80.49(b) or when testing addition fuels 1, 2, or 3 per the requirements of § 80.49(a).

(3) When testing addition fuels 4, 5, 6, and 7 per the requirements of § 80.49(a), toxics emissions need not be measured. However, EPA reserves the right to require the inclusion of such measurements in the test program prior to approval of the test program if evidence exists which suggests that adverse interactive effects of the parameter in question may exist for toxics emissions.

(b) The general requirements per 40 CFR 86.130–96 shall be met.

(c) The engine starting and restarting procedures per 40 CFR 86.136–90 shall be followed.

(d) Except as provided for at § 80.59, general preparation of vehicles being tested shall follow procedures detailed in 40 CFR 86.130–96 and 86.131–96.

[59 FR 7813, Feb. 16, 1994, as amended at 71 FR 74567, Dec. 15, 2005]

§ 80.51 Vehicle test procedures.

The test sequence applicable when augmenting the emission models through vehicle testing is as follows:

(a) Prepare vehicles per § 80.50.

(b) Initial preconditioning per § 80.52(a)(1). Vehicles shall be refueled randomly with the fuels required in § 80.49 when testing to augment the complex emission model.

(c) Exhaust emissions tests, dynamometer procedure per 40 CFR 86.137–90 with:

(1) Exhaust Benzene and 1,3–Butadiene emissions measured per § 80.55; and

(2) Formaldehyde and Acetelaldehyde emissions measured per § 80.56.

§ 80.52 Vehicle preconditioning.

(a) Initial vehicle preconditioning and preconditioning between tests with different fuels shall be performed in accordance with the ''General vehicle handling requirements'' per 40 CFR 86.132–96, up to and including the completion of the hot start exhaust test.

(b) The preconditioning procedure prescribed at 40 CFR 86.132–96 shall be observed for preconditioning vehicles between tests using the same fuel.

§§ 80.53–80.54 [Reserved]

§ 80.55 Measurement methods for benzene and 1,3-butadiene.

(a) Sampling for benzene and 1,3-butadiene must be accomplished by bag sampling as used for total hydrocarbons determination. This procedure is detailed in 40 CFR 86.109.

(b) Benzene and 1,3-butadiene must be analyzed by gas chromatography. Expected values for benzene and 1,3-butadiene in bag samples for the baseline fuel are 4.0 ppm and 0.30 ppm respectively. At least three standards ranging from at minimum 50% to 150% of these expected values must be used to calibrate the detector. An additional standard of at most 0.01 ppm must also be measured to determine the required limit of quantification as described in paragraph (d) of this section.

(c) The sample injection size used in the chromatograph must be sufficient to be above the laboratory determined limit of quantification (LOQ) as defined in paragraph (d) of this section for at least one of the bag samples. A control chart of the measurements of the standards used to determine the response, repeatability, and limit of quantitation of the instrumental method for 1,3-butadiene and benzene must be reported.

(d) As in all types of sampling and analysis procedures, good laboratory practices must be used. See, Lawrence, Principals of Environmental Analysis, 55 Analytical Chemistry 14, at 2210–2218 (1983) (copies may be obtained from the publisher, American Chemical Society, 1155 16th Street NW., Washington, DC 20036). Reporting reproducibility control charts and limits of detection measurements are integral procedures to assess the validity of the chosen analytical method. The repeatability of the test method must be determined by measuring a standard periodically during testing and recording the measured values on a control chart. The control chart shows the error between the measured standard and the prepared standard concentration for the periodic testing. The error between the measured standard and the actual standard indicates the uncertainty in the analysis. The limit of detection (LOD) is determined by repeatedly measuring a blank and a standard prepared at a concentration near an assumed value of the limit of detection. If the average concentration minus the average of the blanks is greater than three standard deviations of these measurements, then the limit of detection is at least as low as the prepared standard. The limit of quantitation (LOQ) is defined as ten times the standard deviation of these measurements. This quantity defines the amount of sample required to be measured for a valid analysis.

(e) Other sampling and analytical techniques will be allowed if they can be proven to have equal specificity and equal or better limits of quantitation. Data from alternative methods that can be demonstrated to have equivalent or superior limits of detection, precision, and accuracy may be accepted by the Administrator with individual prior approval.

§ 80.56 Measurement methods for formaldehyde and acetaldehyde.

(a) Formaldehyde and acetaldehyde will be measured by drawing exhaust samples from heated lines through either 2,4–Dinitrophenylhydrazine (DNPH) impregnated cartridges or impingers filled with solutions of DNPH in acetonitrile (ACN) as described in §§ 86.109 and 86.140 of this chapter for formaldehyde analysis. Diluted exhaust sample volumes must be at least 15 L for impingers containing

20 ml of absorbing solution (using more absorbing solution in the impinger requires proportionally more gas sample to be taken) and at least 4 L for cartridges. As required in § 86.109 of this chapter, two impingers or cartridges must be connected in series to detect breakthrough of the first impinger or cartridge.

(b) In addition, sufficient sample must be drawn through the collecting cartridges or impingers so that the measured quantity of aldehyde is sufficiently greater than the minimum limit of quantitation of the test method for at least a portion of the exhaust test procedure. The limit of quantitation is determined using the technique defined in § 80.55(d).

(c) Each of the impinger samples are quantitatively transferred to a 25 mL volumetric flask (5 mL more than the sample impinger volume) and brought to volume with ACN. The cartridge samples are eluted in reversed direction by gravity feed with 6mL of ACN. The eluate is collected in a graduated test tube and made up to the 5mL mark with ACN. Both the impinger and cartridge samples must be analyzed by HPLC without additional sample preparation.

(d) The analysis of the aldehyde derivatives collected is accomplished with a high performance liquid chromatograph (HPLC). Standards consisting of the hydrazone derivative of formaldehyde and acetaldehyde are used to determine the response, repeatability, and limit of quantitation of the HPLC method chosen for acetaldehyde and formaldehyde.

(e) Other sampling and analytical techniques will be allowed if they can be proven to have equal specificity and equal or better limits of quantitation. Data from alternative methods that can be demonstrated to have equivalent or superior limits of detection, precision, and accuracy may be accepted by the Administrator with individual prior approval.

§§ 80.57–80.58 [Reserved]

§ 80.59 General test fleet requirements for vehicle testing.

(a) The test fleet must consist of only 1989–91 MY vehicles which are technologically equivalent to 1990 MY vehicles, or of 1986–88 MY vehicles for which no changes to the engine or exhaust system that would significantly affect emissions have been made through the 1990 model year. To be technologically equivalent vehicles at minimum must have closed-loop systems and possess adaptive learning.

(b) No maintenance or replacement of any vehicle component is permitted except when necessary to ensure operator safety or as specifically permitted in § 80.60 and § 80.61. All vehicle maintenance procedures must be reported to the Administrator.

(c) Each vehicle in the test fleet shall have no fewer than 4,000 miles of accumulated mileage prior to being included in the test program.

[59 FR 7813, Feb. 16, 1994, as amended at 59 FR 36962, July 20, 1994]

§ 80.60 Test fleet requirements for exhaust emission testing.

(a) Candidate vehicles which conform to the emission performance requirements defined in paragraphs (b) through (d) of this section shall be obtained directly from the in-use fleet and tested in their as-received condition.

(b) Candidate vehicles for the test fleet must be screened for their exhaust VOC emissions in accordance with the provisions in § 80.62.

(c) On the basis of pretesting pursuant to paragraph (b) of this section, the test fleet shall be subdivided into two emitter group sub-fleets: the normal emitter group and the higher emitter group.

(1) Each vehicle with an exhaust total hydrocarbon (THC) emissions rate which is less than or equal to twice the applicable emissions standard shall be placed in the normal emitter group.

(2) Each vehicle with an exhaust THC emissions rate which is greater than two times the applicable emissions standard shall be placed in the higher emitter group.

(d) The test vehicles in each emitter group must conform to the requirements of paragraphs (d)(1) through (4) of this section.

(1) Test vehicles for the normal emitter sub-fleet must be selected from the

list shown in this paragraph (d)(1). This list is arranged in order of descending vehicle priority, such that the order in which vehicles are added to the normal emitter sub-fleet must conform to the order shown (e.g., a ten-vehicle normal emitter group sub-fleet must consist of the first ten vehicles listed in this paragraph (d)(1)). If more vehicles are tested than the minimum number of vehicles required for the normal emitter sub-fleet, additional vehicles are to be added to the fleet in the order specified in this paragraph (d)(1), beginning with the next vehicle not already included in the group. The vehicles in the normal emitter sub-fleet must possess the characteristics indicated in the list. If the end of the list is reached in adding vehicles to the normal emitter sub-fleet and additional vehicles are desired then they shall be added beginning with vehicle number one, and must be added to the normal emitter sub-fleet in accordance with the order in table A:

TABLE A—TEST FLEET DEFINITIONS

Veh. No.	Fuel system	Catalyst	Air injection	EGR	Tech. group	Manufacturer
1	Multi	3W	No Air	EGR	1	GM.
2	Multi	3W	No Air	No EGR	2	Ford.
3	TBI	3W	No Air	EGR	3	GM.
4	Multi	3W+OX	Air	EGR	4	Ford.
5	Multi	3W	No Air	EGR	1	Honda.
6	Multi	3W	No Air	No EGR	2	GM.
7	TBI	3W	No Air	EGR	3	Chrysler.
8	Multi	3W+OX	Air	EGR	4	GM.
9	TBI	3W+OX	Air	EGR	7	Chrysler.
10	Multi	3W	Air	EGR	5	Toyota.
11	Multi	3W	No Air	EGR	1	Ford.
12	Multi	3W	No Air	No EGR	2	Chrysler.
13	Carb	3W+OX	Air	EGR	9	Toyota.
14	TBI	3W	No Air	EGR	3	Ford.
15	Multi	3W+OX	Air	EGR	4	GM.
16	Multi	3W	No Air	EGR	1	Toyota.
17	Multi	3W	No Air	No EGR	2	Mazda.
18	TBI	3W	No Air	EGR	3	GM.
19	Multi	3W+OX	Air	EGR	4	Ford.
20	Multi	3W	No Air	EGR	1	Nissan.

TABLE B—TECH GROUP DEFINITIONS IN TABLE A

Tech group	Fuel system	Catalyst	Air injection	EGR
1	Multi	3W	No Air	EGR.
2	Multi	3W	No Air	No EGR.
3	TBI	3W	No Air	EGR.
4	Multi	3W+OX	Air	EGR.
5	Multi	3W	Air	EGR.
6	TBI	3W	Air	EGR.
7	TBI	3W+OX	Air	EGR.
8	TBI	3W	No Air	No EGR.
9	Carb	3W+OX	Air	EGR.

Legend:

Fuel system:
- Multi = Multi-point fuel injection
- TBI = Throttle body fuel injection
- Carb = Carburetted

Catalyst:
- 3W = 3–Way catalyst
- 3W+OX = 3–Way catalyst plus an oxidation catalyst

Air Injection:
- Air = Air injection

EGR = Exhaust gas recirculation

(2) Test vehicles for the higher emitter sub-fleet shall be selected from the in-use fleet in accordance with paragraphs (a) and (b) of this section and with § 80.59. Test vehicles for the higher emitter sub-fleet are not required to follow the pattern established in paragraph (d)(1) of this section.

(3) The minimum test fleet size is 20 vehicles. Half of the vehicles tested must be included in the normal emitter sub-fleet and half of the vehicles tested

must be in the higher emitter sub-fleet. If additional vehicles are tested beyond the minimum of twenty vehicles, the additional vehicles shall be distributed equally between the normal and higher emitter sub-fleets.

(4) For each emitter group sub-fleet, 70 ±9.5% of the sub-fleet must be LDVs, & 30 ±9.5% must be LDTs. LDTs include light-duty trucks class 1 (LDT1), and light-duty trucks class 2 (LDT2) up to 8500 lbs GVWR.

§ 80.61 [Reserved]

§ 80.62 Vehicle test procedures to place vehicles in emitter group sub-fleets.

One of the two following test procedures must be used to screen candidate vehicles for their exhaust THC emissions to place them within the emitter group sub-fleets in accordance with the requirements of § 80.60.

(a) Candidate vehicles may be tested for their exhaust THC emissions using the Federal test procedure as detailed in 40 CFR part 86, with gasoline conforming to requirements detailed in 40 CFR 86.113–90. The results shall be used in accordance with the requirements in § 80.60 to place the vehicles within their respective emitter groups.

(b) Alternatively, candidate vehicles may be screened for their exhaust THC emissions with the IM240 short test procedure.[1] The results from the IM240 shall be converted into results comparable with the standard exhaust FTP as detailed in this paragraph (b) to place the vehicles within their respective emitter groups in accordance with the requirements of § 80.60.

(1) A candidate vehicle with IM240 test results <0.367 grams THC per vehicle mile shall be classified as a normal emitter.

(2) A candidate vehicle with IM240 test results ≥0.367 grams THC per vehicle mile shall be classified as a higher emitter.

[1] EPA Technical Report EPA-AA-TSS-91-1. Copies may be obtained by ordering publication number PB92104405 from the National Technical Information Service, 5285 Port Royal Road, Springfield, Virginia 22161.

§§ 80.63–80.64 [Reserved]

§ 80.65 General requirements for refiners and importers.

(a) *Date requirements begin.* The requirements of this subpart D apply to all gasoline produced, imported, transported, stored, sold, or dispensed:

(1) At any location other than retail outlets and wholesale purchaser-consumer facilities on or after December 1, 1994; and

(2) At any location on or after January 1, 1995.

(b) *Certification of gasoline and RBOB.* Gasoline or RBOB sold or dispensed in a covered area must be certified under § 80.40.

(c) *Standards must be met on either a per-gallon or on an average basis.* (1) Any refiner or importer, for each batch of reformulated gasoline or RBOB it produces or imports, shall meet:

(i) Those standards and requirements it designated under paragraph (d) of this section for per-gallon compliance on a per-gallon basis; and

(ii) Those standards and requirements it designated under paragraph (d) of this section for average compliance on an average basis over the applicable averaging period.

(2) [Reserved]

(3)(i) For each averaging period, and separately for each parameter that may be met either per-gallon or on average, any refiner shall designate for each refinery, or any importer shall designate its gasoline or RBOB as being subject to the standard applicable to that parameter on either a per-gallon or average basis. For any specific averaging period and parameter all batches of gasoline or RBOB shall be designated as being subject to the per-gallon standard, or all batches of gasoline and RBOB shall be designated as being subject to the average standard. For any specific averaging period and parameter a refiner for a refinery, or any importer may not designate certain batches as being subject to the per-gallon standard and others as being subject to the average standard.

(ii) In the event any refiner for a refinery, or any importer fails to meet the requirements of paragraph (c)(3)(i) of this section and for a specific averaging period and parameter designates

certain batches as being subject to the per-gallon standard and others as being subject to the average, all batches produced or imported during the averaging period that were designated as being subject to the average standard shall, *ab initio*, be redesignated as being subject to the per-gallon standard. This redesignation shall apply regardless of whether the batches in question met or failed to meet the per-gallon standard for the parameter in question.

(d) *Designation of gasoline*. Any refiner or importer of gasoline shall designate the gasoline it produces or imports as follows:

(1) All gasoline produced or imported shall be properly designated as either reformulated or conventional gasoline, or as RBOB.

(2) All gasoline designated as reformulated or as RBOB shall be further properly designated as:

(i) Either VOC-controlled or not VOC-controlled;

(ii) In the case of gasoline or RBOB designated as VOC-controlled:

(A) Either intended for use in VOC-Control Region 1 or VOC-Control Region 2 (as defined in § 80.71); or

(B) Designated as ''adjusted VOC gasoline'' (as defined in § 80.40(c)(1));

(iii) [Reserved]

(iv) For gasoline or RBOB produced, imported, sold, dispensed or used during the period January 1, 1995 through December 31, 1997, either as being subject to the simple model standards, or to the complex model standards;

(v) For each of the following parameters, either gasoline or RBOB which meets the standard applicable to that parameter on a per-gallon basis or on average:

(A) Toxics emissions performance;

(B) NO_X emissions performance in the case of gasoline certified using the complex model.

(C) Benzene content;

(D) [Reserved]

(E) In the case of VOC-controlled gasoline or RBOB certified using the simple model, RVP; and

(F) In the case of VOC-controlled gasoline or RBOB certified using the complex model, VOC emissions performance; and

(vi) In the case of RBOB, the gasoline must be designated as RBOB and the designation must include the type(s) and amount(s) of oxygenate required to be blended with the RBOB.

(3) Every batch of reformulated or conventional gasoline or RBOB produced or imported at each refinery or import facility shall be assigned a number (the ''batch number''), consisting of the EPA-assigned refiner or importer registration number, the EPA facility registration number, the last two digits of the year in which the batch was produced, and a unique number for the batch, beginning with the number one for the first batch produced or imported each calendar year and each subsequent batch during the calendar year being assigned the next sequential number (*e.g.*, 4321–54321–95–000001, 4321–543321–95–000002, etc.)

(e) *Determination of volume and properties*. (1) Each refiner or importer shall for each batch of reformulated gasoline or RBOB produced or imported determine the volume and the value of each of the properties specified in paragraph (e)(2)(i) of this section, except that the value for RVP must be determined only in the case of reformulated gasoline or RBOB that is VOC-controlled. These determinations shall:

(i) Be based on a representative sample of the reformulated gasoline or RBOB that is analyzed using the methodologies specified in § 80.46;

(ii) In the case of RBOB, follow the oxygenate blending instructions specified in § 80.69(a);

(iii) Be carried out either by the refiner or importer, or by an independent laboratory; and

(iv) Be completed prior to the gasoline or RBOB leaving the refinery or import facility for each parameter that the gasoline or RBOB is subject to, or that is used to calculate an emissions performance that the gasoline or RBOB is subject to, under § 80.41(a) through (f).

(2) In the event that the values of any of these properties is determined by the refiner or importer and by an independent laboratory in conformance with the requirements of paragraph (f) of this section:

(i) The results of the analyses conducted by the refiner or importer for such properties shall be used as the basis for compliance determinations

unless the absolute value of the differences of the test results from the two laboratories is larger than the following values:

Fuel property	Range
Sulfur content	25 ppm
Aromatics content	2.7 vol %
Olefins content	2.5 vol %
Benzene content	0.21 vol %
Ethanol content	0.4 vol %
Methanol content	0.2 vol %
MTBE (and other methyl ethers) content	0.6 vol %
ETBE (and other ethyl ethers) content	0.6 vol %
TAME	0.6 vol %
t-Butanol content	0.6 vol %
RVP	0.3 psi
50% distillation (T50)	5 °F
90% distillation (T90)	5 °F
E200	2.5 vol %
E300	3.5 vol %
API Gravity	0.3 °API

(ii) In the event the values from the two laboratories for any property fall outside these ranges, the refiner or importer shall use as the basis for compliance determinations:

(A) The larger of the two values for the property, except the smaller of the two results shall be used for oxygenates; or

(B) The refiner or importer shall have the gasoline analyzed for the property at one additional independent laboratory. If this second independent laboratory obtains a result for the property that is within the range, as listed in paragraph (e)(2)(i) of this section, of the refiner's or importer's result for this property, then the refiner's or importer's result shall be used as the basis for compliance determinations.

(f) *Independent analysis requirement.* (1) Any refiner or importer of reformulated gasoline or RBOB shall carry out a program of independent sample collection and analyses for the reformulated gasoline it produces or imports, which meets the requirements of one of the following two options:

(i) *Option 1.* The refiner or importer shall, for each batch of reformulated gasoline or RBOB that is produced or imported, have the value for each property specified in paragraph (e)(2)(i) of this section determined by an independent laboratory that collects and analyzes a representative sample from the batch using the methodologies specified in § 80.46.

(ii) *Option 2.* The refiner or importer shall have a periodic independent testing program carried out for all reformulated gasoline produced or imported, which shall consist of the following:

(A) An independent laboratory shall collect a representative sample from each batch of reformulated gasoline that the refiner or importer produces or imports;

(B) EPA will identify up to ten percent of the total number of samples collected under paragraph (f)(1)(ii)(A) of this section; and

(C) The designated independent laboratory shall, for each sample identified by EPA under paragraph (f)(1)(ii)(B) of this section, determine the value for each property using the methodologies specified in § 80.46.

(2)(i) Any refiner or importer shall designate one independent laboratory for each refinery or import facility at which reformulated gasoline or RBOB is produced or imported. This independent laboratory will collect samples and perform analyses in compliance with the requirements of this paragraph (f) of this section.

(ii) Any refiner or importer shall identify this designated independent laboratory to EPA under the registration requirements of § 80.76.

(iii) In order to be considered independent:

(A) The laboratory shall not be operated by any refiner or importer, and shall not be operated by any subsidiary or employee of any refiner or importer;

(B) The laboratory shall be free from any interest in any refiner or importer; and

(C) The refiner or importer shall be free from any interest in the laboratory; however

(D) Notwithstanding the restrictions in paragraphs (f)(2)(iii) (A) through (C) of this section, a laboratory shall be considered independent if it is owned or operated by a gasoline pipeline company, regardless of ownership or operation of the gasoline pipeline company by refiners or importers, provided that such pipeline company is owned and operated by four or more refiners or importers.

(iv) Use of a laboratory that is debarred, suspended, or proposed for debarment pursuant to the Governmentwide Debarment and Suspension

regulations, 2 CFR part 1532, or the Debarment, Suspension and Ineligibility provisions of the Federal Acquisition Regulations, 48 CFR part 9, subpart 9.4, shall be deemed noncompliance with the requirements of this paragraph (f).

(v) Any laboratory that fails to comply with the requirements of this paragraph (f) shall be subject to debarment or suspension under Governmentwide Debarment and Suspension regulations, 2 CFR part 1532, or the Debarment, Suspension and Ineligibility regulations, Federal Acquisition Regulations, 48 CFR part 9, subpart 9.4.

(3) Any refiner or importer shall, for all samples collected or analyzed pursuant to the requirements of this paragraph (f), cause its designated independent laboratory:

(i) At the time the designated independent laboratory collects a representative sample from a batch of reformulated gasoline, to:

(A) Obtain the refiner's or importer's assigned batch number for the batch being sampled;

(B) Determine the volume of the batch;

(C) Determine the identification number of the gasoline storage tank or tanks in which the batch was stored at the time the sample was collected;

(D) Determine the date and time the batch became finished reformulated gasoline, and the date and time the sample was collected;

(E) Determine the grade of the batch (e.g., premium, mid-grade, or regular); and

(F) In the case of reformulated gasoline produced through computer-controlled in-line blending, determine the date and time the blending process began and the date and time the blending process ended, unless exempt under paragraph (f)(4) of this section;

(ii) To retain each sample collected pursuant to the requirements of this paragraph (f) for a period of 30 days, except that this period shall be extended to a period of up to 180 days upon request by EPA;

(iii) To submit to EPA periodic reports, as follows:

(A) A report for the period January through March shall be submitted by May 31; a report for the period April through June shall be submitted by August 31; a report for the period July through September shall be submitted by November 30; and a report for the period October through December shall be submitted by February 28;

(B) Each report shall include, for each sample of reformulated gasoline that was analyzed pursuant to the requirements of this paragraph (f):

(*1*) The results of the independent laboratory's analyses for each property; and

(*2*) The information specified in paragraph (f)(3)(i) of this section for such sample; and

(iv) To supply to EPA, upon EPA's request, any sample collected or a portion of any such sample.

(4) Any refiner that produces reformulated gasoline using computer-controlled in-line blending equipment is exempt from the independent sampling and testing requirements specified in paragraphs (f)(1) through (3) of this section and from the requirement of paragraph (e)(1) of this section to obtain test results for each batch prior to the gasoline leaving the refinery, provided that such refiner:

(i) Obtains from EPA an exemption from these requirements. In order to seek such an exemption, the refiner shall submit a petition to EPA, such petition to include:

(A) A description of the refiner's computer-controlled in-line blending operation, including a description of:

(*1*) The location of the operation;

(*2*) The length of time the refiner has used the operation;

(*3*) The volumes of gasoline produced using the operation since the refiner began the operation or during the previous three years, whichever is shorter, by grade;

(*4*) The movement of the gasoline produced using the operation to the point of fungible mixing, including any points where all or portions of the gasoline produced is accumulated in gasoline storage tanks;

(*5*) The physical lay-out of the operation;

(*6*) The automated control system, including the method of monitoring and controlling blend properties and proportions;

(*7*) Any sampling and analysis of gasoline that is conducted as a part of the

operation, including on-line, off-line, and composite, and a description of the methods of sampling, the methods of analysis, the parameters analyzed and the frequency of such analyses, and any written, printed, or computer-stored results of such analyses, including information on the retention of such results;

(*8*) Any sampling and analysis of gasoline produced by the operation that occurs downstream from the blending operation prior to fungible mixing of the gasoline, including any such sampling and analysis by the refiner and by any purchaser, pipeline or other carrier, or by independent laboratories;

(*9*) Any quality assurance procedures that are carried out over the operation; and

(*10*) Any occasion(s) during the previous three years when the refiner adjusted any physical or chemical property of any gasoline produced using the operation downstream from the operation, including the nature of the adjustment and the reason the gasoline had properties that required adjustment; and

(B) A description of the independent audit program of the refiner's computer-controlled in-line blending operation that the refiner proposes will satisfy the requirements of this paragraph (f)(4); and

(ii) Carries out an independent audit program of the refiner's computer-controlled in-line blending operation, such program to include:

(A) For each batch of reformulated gasoline produced using the operation, a review of the documents generated that is sufficient to determine the properties and volume of the gasoline produced;

(B) Audits that occur no less frequently than annually;

(C) Reports of the results of such audits submitted to the refiner, and to EPA by the auditor no later than February 28 of each year;

(D) Audits that are conducted by an auditor that meets the non-debarred criteria specified in § 80.125 (a) and/or (d); and

(iii) Complies with any other requirements that EPA includes as part of the exemption.

(g) [Reserved]

(h) *Compliance audits*. Any refiner and importer of any reformulated gasoline or RBOB shall have the reformulated gasoline and RBOB it produced or imported during each calendar year audited for compliance with the requirements of this subpart D, in accordance with the requirements of subpart F, at the conclusion of each calendar year.

(i) *Exclusion of previously certified gasoline*. Any refiner who uses previously certified reformulated or conventional gasoline or RBOB to produce reformulated gasoline or RBOB must exclude the previously certified gasoline for purposes of demonstrating compliance with the standards under § 80.41. This exclusion must be accomplished by the refiner as follows:

(1)(i) Determine the volume and properties of each batch of previously certified gasoline used to produce reformulated gasoline or RBOB using the procedures in paragraph (e)(1) of this section and § 80.66, and the independent analysis requirements in paragraph (f) of this section in the case of previously certified reformulated gasoline.

(ii) In the case of previously certified reformulated gasoline or RBOB determine the emissions performances for toxics and NO_X, and VOC for VOC-controlled gasoline, and the designations for VOC control.

(iii) In the case of previously certified conventional gasoline determine the exhaust toxics and NO_X emissions performances.

(2) Determine the volume and properties, and the emissions performance for toxics and NO_X, and VOC for VOC-controlled gasoline, of any batch of reformulated gasoline or RBOB produced at the refinery using previously certified gasoline and include each batch in the refinery's compliance calculations without regard to the presence of previously certified gasoline in the batch.

(3) In the case of any parameter or emissions performance standard that the refiner has designated for the refinery to meet on a per-gallon basis under paragraph (d)(2)(v) of this section, the per-gallon standard that applies to any batch of reformulated gasoline or RBOB produced by the refinery is as follows:

(i) When using any previously certified reformulated gasoline or RBOB, the more stringent of:

(A) The per-gallon standard that applies to the refinery under § 80.41; or

(B) The most stringent value for that parameter or emissions performance for any previously certified reformulated gasoline or RBOB used to produce the batch.

(ii) When using any previously certified conventional gasoline, the per-gallon standard that applies to the refinery under § 80.41.

(4) In the case of any parameter or emissions performance standard that the refiner has designated for the refinery to meet on average under paragraph (d)(2)(v) of this section, any previously certified gasoline must be excluded from the refinery's compliance calculations as follows:

(i) Where a refiner uses previously certified reformulated gasoline or RBOB to produce reformulated gasoline or RBOB:

(A) The refiner must include the volume and properties of any batch of previously certified reformulated gasoline or RBOB in the refinery's compliance calculations for the standard under § 80.67(g) as a negative batch, by multiplying the term V_i in § 80.67(g)(1)(ii) (i.e., the batch volume) times negative 1; and

(B) The negative batch under paragraph (i)(4)(i)(A) of this section must be included in the averaging categories that correspond to the designation regarding VOC control of the previously certified gasoline batch when received; and

(C) The net volume of gasoline in the refinery's reformulated gasoline compliance calculations must be positive in each of the following categories where the standard is being met on average:

Standard	Gasoline category that must have net positive volume
(*1*) Oxygen	All RFG [1].
(*2*) Benzene	All RFG and RBOB.
(*3*) VOC emissions performance.	(*i*)RFG and RBOB that is VOC-controlled for Region 1. (*ii*) RFG and RBOB that is VOC-controlled for Region 2.
(*4*) Toxics emissions performance.	All RFG and RBOB.
(*5*) NO_X emissions performance.	(*i*) All RFG and RBOB. (*ii*) RFG and RBOB that is VOC-controlled.

[1] "RFG" is an abbreviation for reformulated gasoline.

(ii) Where a refiner uses previously certified conventional gasoline to produce reformulated gasoline or RBOB:

(A) The refiner must include the volume and properties of any batch of previously certified conventional gasoline as a negative batch in the refiner's anti-dumping compliance calculations under § 80.101(g) for the refinery, or where applicable, the refiner's aggregation under § 80.101(h); and

(B) The net volume of gasoline in the refiner's anti-dumping compliance calculations for the refinery, or, where applicable, the refiner's aggregation under § 80.101(h), must be positive.

(5) The refiner must use any previously certified gasoline that the refiner includes as a negative batch under paragraph (i)(4) of this section in its compliance calculations for the refinery, or where appropriate, the refiner's aggregation, as a component in gasoline production during the annual averaging period in which the previously certified gasoline was included as a negative batch in the refiner's compliance calculations.

(6) (i) Any refiner may use the procedures specified in this paragraph (i) to combine previously certified conventional gasoline with reformulated gasoline or RBOB, to reclassify conventional gasoline into reformulated gasoline or RBOB, or to change the designations of reformulated gasoline or RBOB with regard to VOC control.

(ii) The procedures under this section are refinery procedures. Any person who uses the procedures under this section is a refiner who must meet all requirements applicable to refiners under this subpart.

(7) Nothing in this paragraph (i) prevents any party from combining previously certified reformulated gasolines from different sources in a manner that does not violate the prohibitions in § 80.78(a).

[59 FR 7813, Feb. 16, 1994, as amended at 59 FR 36962, July 20, 1994; 59 FR 39289, Aug. 2, 1994; 59 FR 60715, Nov. 28, 1994; 62 FR 60135, Nov. 6, 1997; 66 FR 37165, July 17, 2001; 66 FR 67105, Dec. 28, 2001; 67 FR 8737, Feb. 26, 2002; 71 FR 74567, Dec. 15, 2005; 71 FR 26698, May 8, 2006; 72 FR 2427, Jan. 19, 2007]

§ 80.66 Calculation of reformulated gasoline properties.

(a) All volume measurements required by these regulations shall be temperature adjusted to 60 degrees Fahrenheit.

(b) The percentage of oxygen by weight contained in a gasoline blend, based upon its percentage oxygenate by volume and density, shall exclude denaturants and water.

(c) The properties of reformulated gasoline consist of per-gallon values separately and individually determined on a batch-by-batch basis using the methodologies specified in § 80.46 for each of those physical and chemical parameters necessary to determine compliance with the standards to which the gasoline is subject, and per-gallon values for the VOC, NO_X, and toxics emissions performance standards to which the gasoline is subject.

(d) Per-gallon oxygen content shall be determined based upon the weight percent oxygen of a representative sample of gasoline, using the method set forth in § 80.46(g). The total oxygen content associated with a batch of gasoline (in percent-gallons) is calculated by multiplying the weight percent oxygen content times the volume.

(e) Per-gallon benzene content shall be determined based upon the volume percent benzene of a representative sample of a batch of gasoline by the method set forth in § 80.46(e). The total benzene content associated with a batch of gasoline (in percent-gallons) is calculated by multiplying the volume percent benzene content times the volume.

(f) Per-gallon RVP shall be determined based upon the measurement of RVP of a representative sample of a batch of gasoline by the sampling methodologies specified in appendix D of this part and the testing methodology specified in appendix E of this part. The total RVP value associated with a batch of gasoline (in RVP-gallons) is calculated by multiplying the RVP times the volume.

(g)(1) Per gallon values for VOC and NO_X emissions reduction shall be calculated using the methodology specified in § 80.45 that is appropriate for the gasoline.

(2) Per-gallon values for toxic emissions performance reduction shall be established using:

(i) For gasoline subject to the simple model, the methodology under § 80.42 that is appropriate for the gasoline; and

(ii) For gasoline subject to the complex model, the methodology specified in § 80.45 that is appropriate for the gasoline.

(3) The total VOC, NO_X, and toxic emissions performance reduction values associated with a batch of gasoline (in percent reduction-gallons) is calculated by multiplying the per-gallon percent emissions performance reduction times the volume of the batch.

[59 FR 7813, Feb. 16, 1994, as amended at 59 FR 36963, July 20, 1994]

§ 80.67 Compliance on average.

The requirements of this section apply to all reformulated gasoline and RBOB produced or imported for which compliance with one or more of the requirements of § 80.41 is determined on average (''averaged gasoline'').

(a) *Compliance survey required in order to meet standards on average.* (1) Any refiner or importer that complies with the compliance survey requirements of § 80.68 has the option of meeting the standards specified in § 80.41 for average compliance in addition to the option of meeting the standards specified in § 80.41 for per-gallon compliance; any refiner or importer that does not comply with the survey requirements must meet the standards specified in § 80.41 for per-gallon compliance, and does not have the option of meeting standards on average.

(2)(i)(A) A refiner or importer that produces or imports reformulated gasoline that exceeds the average standard

for benzene (but not for other parameters that have average standards) may use such gasoline to offset reformulated gasoline which does not achieve this average standard, but only if the reformulated gasoline that does not achieve this average standard is sold to ultimate consumers in the same covered area as was the reformulated gasoline which exceeds the average standard; provided that:

(B) Prior to the beginning of the averaging period when the averaging approach described in paragraph (a)(2)(i)(A) of this section is used, the refiner or importer obtains approval from EPA. In order to seek such approval, the refiner or importer shall submit a petition to EPA, such petition to include:

(*1*) The identification of the refiner and refinery, or importer, the covered area, and the averaging period; and

(*2*) A detailed description of the procedures the refiner or importer will use to ensure the gasoline is produced by the refiner or is imported by the importer and is used only in the covered area in question and is not used in any other covered area, and the record keeping, reporting, auditing, and other quality assurance measures that will be followed to establish the gasoline is used as intended; and

(C) The refiner or importer properly completes any requirements that are specified by EPA as conditions for approval of the petition.

(ii) Any refiner or importer that meets the requirements of paragraph (a)(2)(i) of this section will be deemed to have satisfied the compliance survey requirements of § 80.68 for the covered area in question.

(b) *Scope of averaging*. (1) Any refiner shall meet all applicable averaged standards separately for each of the refiner's refineries;

(2)(i) Any importer shall meet all applicable averaged standards on the basis of all averaged reformulated gasoline and RBOB imported by the importer; except that

(ii) Any importer to whom different standards apply for gasoline imported at different facilities by operation of § 80.41(i), shall meet the averaged standards separately for the averaged reformulated gasoline and RBOB imported into each group of facilities that is subject to the same standards; and

(3) [Reserved]

(c) *RVP and VOC emissions performance reduction compliance on average*. (1) The VOC-controlled reformulated gasoline and RBOB produced at any refinery or imported by any importer during the period January 1 through September 15 of each calendar year which is designated for average compliance for RVP or VOC emissions performance on average must meet the standards for RVP (in the case of a refinery or importer subject to the simple model standards) or the standards for VOC emissions performance reduction (in the case of a refinery or importer subject to the complex model standards) which are applicable to that refinery or importer as follows:

(i) Gasoline and RBOB designated for VOC Control Region 1 must meet the standards for that Region which are applicable to that refinery or importer; and

(ii) Gasoline and RBOB designated for VOC Control Region 2 must meet the standards for that Region which are applicable to that refinery or importer.

(2) In the case of a refinery or importer subject to the simple model standards, each gallon of reformulated gasoline and RBOB designated as being VOC-controlled may not exceed the maximum standards for RVP specified in § 80.41(b) which are applicable to that refiner or importer.

(3) In the case of a refinery or importer subject to the complex model standards, each gallon of reformulated gasoline designated as being VOC-controlled must equal or exceed the minimum standards for VOC emissions performance specified in § 80.41 which are applicable to that refinery or importer.

(d) *Toxics emissions reduction and benzene compliance on average*. (1) The averaging period for the requirements for benzene content and toxics emission performance is January 1 through December 31 of each year.

(2) The reformulated gasoline and RBOB produced at any refinery or imported by any importer during the toxics emissions performance and benzene averaging periods that is designated for average compliance for

these parameters shall on average meet the standards specified for toxics emissions performance and benzene in § 80.41 which are applicable to that refinery or importer.

(3) Each gallon of reformulated gasoline may not exceed the maximum standard for benzene content specified in § 80.41 which is applicable to that refinery or importer.

(e) *NO_X compliance on average.* (1) The averaging period for NO_X emissions performance is January 1 through December 31 of each year.

(2) The requirements of this paragraph (e) apply separately to reformulated gasoline and RBOB in the following categories:

(i) All reformulated gasoline and RBOB that is designated as VOC-controlled; and

(ii) All reformulated gasoline and RBOB that is not designated as VOC-controlled.

(3) The reformulated gasoline and RBOB produced at any refinery or imported by any importer during the NO_X averaging period that is designated for average compliance for NO_X shall on average meet the standards for NO_X specified in § 80.41 that are applicable to that refinery or importer.

(f) [Reserved]

(g) *Compliance calculation.* To determine compliance with the averaged standards in § 80.41, any refiner for each of its refineries at which averaged reformulated gasoline or RBOB is produced, and any importer that imports averaged reformulated gasoline or RBOB shall, for each averaging period and for each portion of gasoline for which standards must be separately achieved, and for each relevant standard, calculate:

(1)(i)(A) The compliance total using the following formula:

$$\text{COMPLIANCE TOTAL} = \left(\sum_{i=1}^{n} V_i\right) \times \text{std}$$

Where:

V_i=the volume in gallons of gasoline batch i.

std=the standard for the parameter being evaluated.

n=the number of batches of gasoline produced or imported during the averaging period.

(B) For computation of the VOC performance standard compliance total, Std for each VOC control region is determined by the following formula:

$$\text{Std} = \frac{\text{Std}_u \times \sum_{i=1}^{n_u} VU_i + \text{Std}_a \times \sum_{i=1}^{n_a} VA_i}{\sum_{i=1}^{n_u} VU_i + \sum_{i=1}^{n_a} VA_i}$$

Where, for gasoline and RBOB designated for that VOC control region:

Std=the value to be used in the compliance total formula.

Std_u=the averaged VOC emissions performance reduction standard applicable to reformulated gasoline and RBOB not designated for compliance with the adjusted VOC gasoline standard.

Std_a=the averaged VOC emissions performance reduction standard applicable to reformulated gasoline and RBOB designated for compliance with the adjusted VOC gasoline standard.

VU_i=the volume of batch i not designated for compliance with the adjusted VOC gasoline standard.

VA_i=the volume of batch i designated for compliance with the adjusted VOC gasoline standard.

n_u=the number of batches produced or imported and not designated for compliance with the adjusted VOC gasoline standard.

n_a=the number of batches produced or imported and designated for compliance with the adjusted VOC gasoline standard.

(C) The actual total using the following formula:

$$\text{ACTUAL TOTAL} = \sum_{i=1}^{n} \left(V_i \times \text{parm}_i\right)$$

Where:

V_i=the volume in gallons of gasoline batch i.

parm_i=the parameter value of gasoline batch i.

n=the number of batches of gasoline produced or imported during the averaging period.

(ii) [Reserved]

(2) For each standard, compare the actual total with the compliance total.

(3) For the VOC, NO_X, and toxics emissions performance standards, the actual totals must be equal to or greater than the compliance totals to achieve compliance.

(4) For RVP and benzene standards, the actual total must be equal to or

less than the compliance totals to achieve compliance.

(5) If the actual total for the benzene standard is greater than the compliance total, credits for this parameter must be obtained from another refiner or importer in order to achieve compliance:

(i) [Reserved]

(ii) The total number of benzene credits required to achieve compliance is calculated by subtracting the compliance total from the actual total benzene.

(6) If the actual total for the benzene standard is less than the compliance totals, credits for this parameter are generated.

(i) [Reserved]

(ii) The total number of benzene credits which may be traded to another refinery or importer is calculated by subtracting the actual total from the compliance total for benzene.

(7) In 2006 only, compliance with the oxygen standards in § 80.41 may be based on the volume and oxygen content of all reformulated gasoline produced or imported during the period January 1, 2006, through May 5, 2006 or the volume and oxygen content of all oxygenated reformulated gasoline produced or imported during the 2006 annual averaging period (January 1 through December 31).

(h) *Credit transfers.* (1) Compliance with the averaged standards specified in § 80.41 for benzene (but for no other standards or requirements) may be achieved through the transfer of benzene credits provided that:

(i) The credits were generated in the same averaging period as they are used;

(ii) The credit transfer takes place no later than fifteen working days following the end of the averaging period in which the reformulated gasoline credits were generated;

(iii) The credits are properly created;

(iv) The credits are transferred, either through inter-company or intra-company transfers, directly from the refiner or importer that creates the credits to the refiner or importer that uses the credits to achieve compliance; and

(v) Benzene credits are not used to achieve compliance with the maximum benzene content standards in § 80.41.

(2) No party may transfer any credits to the extent such a transfer would result in the transferor having a negative credit balance at the conclusion of the averaging period for which the credits were transferred. Any credits transferred in violation of this paragraph are improperly created credits.

(3) In the case of credits that were improperly created, the following provisions apply:

(i) Improperly created credits may not be used to achieve compliance, regardless of a credit transferee's good faith belief that it was receiving valid credits;

(ii) No refiner or importer may create, report, or transfer improperly created credits; and

(iii) Where any credit transferor has in its balance at the conclusion of any averaging period both credits which were properly created and credits which were improperly created, the properly created credits will be applied first to any credit transfers before the transferor may apply any credits to achieve its own compliance.

(i) *Average compliance for reformulated gasoline produced or imported before January 1, 1995.* In the case of any reformulated gasoline that is intended to be used beginning January 1, 1995, but that is produced or imported prior to that date:

(1) Any refiner or importer may meet standards specified in § 80.41 for average compliance for such gasoline, provided the refiner or importer has the option of meeting standards on average for 1995 under paragraph (a) of this section, and provided the refiner or importer elects to be subject to average standards under § 80.65(c)(3); and

(2) Any average compliance gasoline under paragraph (i)(1) of this section shall be combined with average compliance gasoline produced during 1995 for purposes of compliance calculations under paragraph (g) of this section.

[38 FR 1255, Jan. 10, 1973, as amended at 62 FR 60135, Nov. 6, 1997; 62 FR 68207, Dec. 31, 1997; 66 FR 37165, July 17, 2001; 71 FR 74568, Dec. 15, 2005; 71 FR 26699, May 8, 2006]

§ 80.68 Compliance surveys.

(a)(1) Beginning January 1, 2007, the compliance surveys for NO_X emissions performance under this section shall cease to be required.

(2) Beginning January 1, 2011, the compliance surveys for toxics emissions performance under this section shall cease to be required.

(b) *Compliance survey option 1.* In order to satisfy the compliance survey requirements, any refiner or importer shall properly conduct a program of compliance surveys in accordance with a survey program plan which has been approved by the Administrator of EPA in each covered area which is supplied with any gasoline for which compliance is achieved on average that is produced by that refinery or imported by that importer. Such approval shall be based upon the survey program plan meeting the following criteria:

(1) The survey program shall consist of at least four surveys which shall occur during the following time periods: one survey during the period January 1 through May 31; two surveys during the period June 1 through September 15; and one survey during the period September 16 through December 31.

(2) The survey program shall meet the criteria stated in paragraph (d) of this section.

(3) In the event that any refiner or importer fails to properly carry out an approved survey program, the refiner or importer shall achieve compliance with all applicable standards on a per-gallon basis for the calendar year in which the failure occurs, and may not achieve compliance with any standard on an average basis during this calendar year. This requirement to achieve compliance per-gallon shall apply *ab initio* to the beginning of any calendar year in which the failure occurs, regardless of when during the year the failure occurs.

(c) *Compliance survey option 2.* A refiner or importer shall be deemed to have satisfied the compliance survey requirements described in paragraph (b) of this section if a comprehensive program of surveys is properly conducted in accordance with a survey program plan which has been approved by the Administrator of EPA. Such approval shall be based upon the survey program plan meeting the following criteria:

(1) The initial schedule for the conduct of surveys shall be as follows:

(i) 120 surveys shall be conducted in 1995;

(ii) 80 surveys shall be conducted in 1996;

(iii) 60 surveys shall be conducted in 1997;

(iv) 70 surveys shall be conducted in 1998 and thereafter.

(2) This initial survey schedule shall be adjusted as follows:

(i) In the event one or more ozone nonattainment areas in addition to the nine specified in § 80.70, opt into the reformulated gasoline program, the number of surveys to be conducted in the year the area or areas opt into the program and in each subsequent year shall be increased according to the following formula:

$$ANS_i = \left(\frac{V_{opt-in}}{V_{orig}} \times NS_i \right) + NS_i$$

where:

ANS_i = the adjusted number of surveys for year i; i = the opt-in year and each subsequent year

NS_i = the number of surveys according to the schedule in paragraph (c)(1) of this section in year i; i = the opt-in year and each subsequent year

V_{opt-in} = the total volume of gasoline supplied to the opt-in covered areas in the year preceding the year of the opt-in

V_{orig} = the total volume of gasoline supplied to the original nine covered areas in the year preceding the year of the opt-in

(ii) In the event that any covered area(s) fails a survey or survey series according to the criteria set forth in paragraph (d) of this section, the annual decreases in the numbers of surveys prescribed by paragraph (c)(1) of this section, as adjusted by paragraph (c)(2)(i) of this section, shall be adjusted as follows in the year following the year of the failure. Any such adjustment to the number of surveys shall remain in effect so long as any standard for the affected covered area has been adjusted to be more stringent as a result of a failed survey or survey

series. The adjustments shall be calculated according to the following formula:

$$ANS_i = \left(\frac{V_{failed}}{V_{total}} \times \left(NS_{i-1} - NS_i \right) \right) + NS_i$$

where:

ANS_i = the adjusted number of surveys in year i; i = the year after the failure and each subsequent year

V_{failed} = the total volume of gasoline supplied to the covered area which failed the survey or survey series in the year of the failure

V_{total} = the total volume of gasoline supplied to all covered areas in the year of the failure

NS_i = the number of surveys in year i according to the schedule in paragraph (c)(1) of this section and as adjusted by paragraph (c)(2)(i) of this section; i = the year after the failure and each subsequent year

(3) The survey program shall meet the criteria stated in paragraph (d) of this section.

(4) On each occasion the comprehensive survey program does not occur as specified in the approved plan with regard to any covered area:

(i) Each refiner or importer who supplied any reformulated gasoline or RBOB to the covered area and who has not satisfied the survey requirements described in paragraph (b) of this section shall be deemed to have failed to carry out an approved survey program; and

(ii) The covered area will be deemed to have failed surveys for VOC and NO_X emissions performance, and survey series for benzene and toxic and NO_X emissions performance.

(d) *General survey requirements.* (1) During the period January 1, 1995 through December 31, 1997:

(i) Any sample taken from a retail gasoline storage tank for which the three most recent deliveries were of gasoline designated as meeting:

(A) Simple model standards shall be considered a ''simple model sample''; or

(B) Complex model standards shall be considered a ''complex model sample.''

(ii) A survey shall consist of the combination of a simple model portion and a complex model portion, as follows:

(A) The simple model portion of a survey shall consist of all simple model samples that are collected pursuant to the applicable survey design in a single covered area during any consecutive seven-day period and that are not excluded under paragraph (d)(6) of this section.

(B) The complex model portion of a survey shall consist of all complex model samples that are collected pursuant to the applicable survey design in a single covered area during any consecutive seven-day period and that are not excluded under paragraph (d)(6) of this section.

(iii)(A) The simple model portion of each survey shall be representative of all gasoline certified using the simple model which is being dispensed in the covered area.

(B) The complex model portion of each survey shall be representative of all gasoline certified using the complex model which is being dispensed in the covered area.

(2) Beginning on January 1, 1998:

(i) A survey shall consist of all samples that are collected pursuant to the applicable survey design in a single covered area during any consecutive seven-day period and that are not excluded under paragraph (d)(6) of this section.

(ii) A survey shall be representative of all gasoline which is being dispensed in the covered area.

(3)(i) A VOC survey and a NO_X survey shall consist of any survey conducted during the period June 1 through September 15;

(ii) A sample of gasoline taken at a retail outlet or wholesale purchaser-consumer facility that has within the

past 30 days commingled ethanol blended reformulated gasoline with non-ethanol blended reformulated gasoline in accordance with the provisions in § 80.78(a)(8) shall not be used in a VOC survey required under this section.

(4)(i) A toxics and benzene survey series shall consist of all surveys conducted in a single covered area during a single calendar year.

(ii) A NO_X survey series shall consist of all surveys conducted in a single covered area during the periods January 1 through May 31, and September 16 through December 31 during a single calendar year.

(5)(i) Each simple model sample included in a survey shall be analyzed for oxygenate type and content, benzene content, aromatic hydrocarbon content, and RVP in accordance with the methodologies specified in § 80.46; and

(ii) Each complex model sample included in a survey shall be analyzed for oxygenate type and content, olefins, benzene, sulfur, and aromatic hydrocarbons, E–200, E–300, and RVP in accordance with the methodologies specified in § 80.46.

(6)(i) The results of each survey shall be based upon the results of the analysis of each sample collected during the course of the survey, unless the sample violates the applicable per-gallon maximum or minimum standards for the parameter being evaluated plus any enforcement tolerance that applies to the parameter (*e.g.*, a sample that violates the benzene per-gallon maximum plus any benzene enforcement tolerance but meets other per-gallon maximum and minimum standards would be excluded from the benzene survey, but would be included in the surveys for parameters other than benzene).

(ii) Any sample from a survey that violates any standard under § 80.41, or that constitutes evidence of the violation of any prohibition or requirement under this subpart D, may be used by the Administrator in an enforcement action for such violation.

(7) Each laboratory at which samples in a survey are analyzed shall participate in a correlation program with EPA to ensure the validity of analysis results.

(8)(i) The results of each simple model VOC survey shall be determined as follows:

(A) For each simple model sample from the survey, the VOC emissions reduction percentage shall be determined based upon the tested values for RVP and oxygen for that sample as applied to the VOC emissions reduction equation at § 80.42(a)(1) for VOC-Control Region 1 and § 80.42(a)(2) for VOC-Control Region 2;

(B) The VOC emissions reduction survey standard applicable to each covered area shall be calculated by using the VOC emissions equation at § 80.42(a)(1) with RVP = 7.2 and OXCON = 2.0 for covered areas located in VOC-Control Region 1 and using the VOC emissions equation at § 80.42(a)(2) with RVP = 8.1 and OXCON = 2.0 for covered areas located in VOC-Control Region 2; and

(C) The covered area shall have failed the simple model VOC survey if the VOC emissions reduction average of all survey samples is less than VOC emissions reduction survey standard calculated under paragraph (d)(8)(i)(B) of this section.

(ii) The results of each complex model VOC emissions reduction survey shall be determined as follows:

(A) For each complex model sample from the survey series, the VOC emissions reduction percentage shall be determined based upon the tested parameter values for that sample and the appropriate methodology for calculating VOC emissions reduction at § 80.45;

(B) The covered area shall have failed the complex model VOC survey if the VOC emissions reduction percentage average of all survey samples is less than the applicable per-gallon standard for VOC emissions reduction;

(C) For adjusted VOC gasoline sold in the covered areas described at § 80.70(f) and (i), the covered area shall have failed the complex model VOC survey if the VOC emissions reduction percentage average of all survey samples is less than the weighted average of the applicable per-gallon standards for VOC emissions reduction calculated according to the following formula:

$$WSTD = \frac{VOCU \times n_u + VOCA \times n_a}{n}$$

Where:

WSTD=Weighted average of the applicable per-gallon VOC standards.

VOCU=Per gallon VOC standard applicable in the covered area to RFG containing less than 10 percent ethanol by volume.

VOCA=Per gallon VOC standard applicable in the covered area to RFG containing 10 percent ethanol by volume.

n_u=Number of samples in the VOC survey with oxygen content less than 3.5 percent by weight.

n_a=Number of samples in the VOC survey with oxygen content equal to or greater than 3.5 percent by weight.

n=Total number of samples in the VOC survey.

(9)(i) The results of each simple model toxics emissions reduction survey series conducted in any covered area shall be determined as follows:

(A) For each simple model sample from the survey series, the toxics emissions reduction percentage shall be determined based upon the tested parameter values for that sample and the appropriate methodology for calculating toxics emissions performance reduction at § 80.42.

(B) The annual average of the toxics emissions reduction percentages for all samples from a survey series shall be calculated according to the following formula[2]:

$$\mathrm{AATER} = \left(\left(\frac{\sum_{i=1}^{s_1} \left(\frac{\sum_{j=1}^{n_1} \mathrm{TER}_{1,j}}{n_1} \right)_i}{s_1} \right) \times 0.468 \right) + \left(\left(\frac{\sum_{i=1}^{s_2} \left(\frac{\sum_{j=1}^{n_2} \mathrm{TER}_{2,j}}{n_2} \right)_i}{s_2} \right) \times 0.532 \right)$$

Where:

AATER = the annual average toxics emissions reduction

$TER_{1,j}$ = the toxics emissions reduction for sample j of gasoline collected during the high ozone season

$TER_{2,j}$ = the toxics emissions reduction for sample j of gasoline collected outside the high ozone season

n_1 = the number of gasoline samples collected during a one-week survey conducted within the high ozone season

s_1 = the number of one-week surveys conducted within the high ozone season

n_2 = the number of gasoline samples collected during a one-week survey conducted outside the high ozone season

s_2 = the number of one-week surveys conducted outside of the high ozone season

(C) The covered area shall have failed the simple model toxics survey series if the annual average toxics emissions reduction is less than the simple model per-gallon standard for toxics emissions reduction.

(ii) The results of each complex model toxics emissions reduction survey series conducted in any covered area shall be determined as follows:

[2] The formula requires, first, that the toxic reductions of samples taken in each one-week survey be averaged to obtain an average for each such survey. Then these survey averages are, themselves, averaged separately for high-ozone and non-high-ozone season surveys, to obtain two overall averages. These overall averages are each to be multiplied by a seasonal weight (0.468 for high-ozone season and 0.532 for non-high ozone season) and the resulting products added together to obtain the average annual toxic emission reduction.

(A) For each complex model sample from the survey series, the toxics emissions reduction percentage shall be determined based upon the tested parameter values for that sample and the appropriate methodology for calculating toxics emissions reduction at § 80.45;

(B) The annual average of the toxics emissions reduction percentages for a survey series shall be calculated according to the formula specified in paragraph (d)(9)(i)(B) of this section; and

(C) The covered area shall have failed the complex model toxics survey series if the annual average toxics emissions reduction is less than the applicable per-gallon complex model standard for toxics emissions reduction.

(10) The results of each NO_X emissions reduction survey and survey series shall be determined as follows:

(i) For each sample from the survey and survey series, the NO_X emissions reduction percentage shall be determined based upon the tested parameter values for that sample and the appropriate methodology for calculating NO_X emissions reduction at § 80.45; and

(ii) The average NO_X emission reduction percentage for each single week-long NO_X survey shall be calculated as the average of all NO_X emission reduction percentages from the survey.

(iii) The covered area shall have failed a NO_X survey if the average NO_X emissions reduction percentage for all survey samples is less than the applicable Phase I or Phase II complex model per-gallon standard for NO_X emissions reduction.

(iv) The average NO_X emission reduction percentage for a NO_X survey series shall be calculated according to the following formula:

$$ANER = \frac{\sum_{i=1}^{S}\left(\frac{\sum_{j=1}^{n} NER_j}{n}\right)_i}{S}$$

Where:

ANER = the average NO_X emission reduction percentage for a NO_X survey series,

n = the number of gasoline samples taken in the course of a week-long NO_X survey,

NER_j = the NO_X emissions reduction percentage for gasoline sample j determined according to the appropriate methodology at § 80.45, and

S = the number of week-long NO_X surveys conducted during the NO_X survey series period

(v) The covered area shall have failed a NO_X survey series if the average NO_X emissions reduction percentage for the series, as computed in paragraph (d)(10)(iv) of this section, is less than the applicable Phase I or Phase II complex model per gallon standard for NO_X emissions reduction.

(11)(i) The results of each benzene content survey series conducted in any covered area shall be determined according to the following formula:

$$AABC = \frac{\sum_{i=1}^{S}\left(\frac{\sum_{j=1}^{n} BC_j}{n}\right)_i}{S}$$

Where:

AABC = the annual average benzene content for a benzene content survey series,

n = the number of gasoline samples taken in the course of a week-long benzene content survey,

BC_j = the benzene content for gasoline sample j taken in the course of a week-long benzene content survey, and

S = the number of week-long benzene content surveys conducted during the year.

(ii) If the annual average benzene content computed in paragraph (d)(11)(i) of this section is greater than 1.000 percent by volume, the covered area shall have failed a benzene content survey series.

(12) [Reserved]

(13) Each survey program shall:

(i) Be planned and conducted by a person who is independent of the refiner or importer (the surveyor). In order to be considered independent:

(A) The surveyor shall not be an employee of any refiner or importer;

(B) The surveyor shall be free from any obligation to or interest in any refiner or importer; and

(C) The refiner or importer shall be free from any obligation to or interest in the surveyor; and

(ii) Include procedures for selecting sample collection locations, numbers of samples, and gasoline compositions which will result in:

(A) Simple model surveys representing all gasoline certified using the simple model being dispensed at retail outlets within the covered area during the period of the survey; and

(B) Complex model surveys representing all gasoline certified using the complex model being dispensed at retail outlets within the covered area during the period of the survey; and

(iii) Include procedures such that the number of samples included in each survey or survey series (whichever is applicable) assures that:

(A) In the case of simple model surveys or survey series, the average levels of oxygen, benzene, RVP, and aromatic hydrocarbons are determined with a 95% confidence level, with error of less than 0.1 psi for RVP, 0.05% for benzene (by volume), and 0.1% for oxygen (by weight); and

(B) In the case of complex model surveys or survey series, the average levels of oxygen, benzene, RVP, aromatic hydrocarbons, olefins, T–50, T–90 and sulfur are determined with a 95% confidence level, with error of less than 0.1 psi for RVP, 0.05% for benzene (by volume), 0.1% for oxygen (by weight), 0.5% for olefins (by volume), 5 °F. for T–50 and T–90, and 10 ppm for sulfur; or an equivalent level of precision for the complex model-determined emissions parameters; and

(iv) Require that the surveyor shall:

(A) Not inform anyone, in advance, of the date or location for the conduct of any survey;

(B) Upon request by EPA made within thirty days following the submission of the report of a survey, provide a duplicate of any gasoline sample taken during that survey to EPA at a location to be specified by EPA each sample to be identified by the name and address of the facility where collected, the date of collection, and the classification of the sample as simple model or complex model; and

(C) At any time permit any representative of EPA to monitor the conduct of the survey, including sample collection, transportation, storage, and analysis; and

(v) Require the surveyor to submit to EPA a report of each survey, within thirty days following completion of the survey, such report to include the following information:

(A) The identification of the person who conducted the survey;

(B) An attestation by an officer of the surveyor company that the survey was conducted in accordance with the survey plan and that the survey results are accurate;

(C) If the survey was conducted for one refiner or importer, the identification of that party;

(D) The identification of the covered area surveyed;

(E) The dates on which the survey was conducted;

(F) The address of each facility at which a gasoline sample was collected, the date of collection, and the classification of the sample as simple model or complex model;

(G) The results of the analyses of simple model samples for oxygenate type and oxygen weight percent, benzene content, aromatic hydrocarbon content, and RVP, the calculated toxics emission reduction percentage, and for each survey conducted during the period June 1 through September 15 the VOC emissions reduction percentage calculated using the methodology specified in paragraph (d)(8)(i) of this section;

(H) The results of the analyses of complex model samples for oxygenate type and oxygen weight percent, benzene, aromatic hydrocarbon, and olefin content, E–200, E–300, and RVP, the calculated NO_X and toxics emissions reduction percentage, and for each survey conducted during the period June 1 through September 15, the calculated VOC emissions reduction percentage;

(I) The name and address of each laboratory where gasoline samples were analyzed;

(J) A description of the methodology utilized to select the locations for sample collection and the numbers of samples collected;

(K) For any samples which were excluded from the survey, a justification for such exclusion; and

(L) The average toxics emissions reduction percentage for simple model

samples and the percentage for complex model samples, the average benzene percentage, and for each survey conducted during the period June 1 through September 15, the average VOC emissions reduction percentage for simple model samples and the percentage for complex model samples, and the average NO_X emissions reduction percentage for all complex model samples;

(14) Each survey shall be conducted at a time and in a covered area selected by EPA no earlier than two weeks before the date of the survey.

(15) The procedure for seeking EPA approval for a survey program plan shall be as follows:

(i) The survey program plan shall be submitted to the Administrator of EPA for EPA's approval no later than September 1 of the year preceding the year in which the surveys will be conducted; and

(ii) Such submittal shall be signed by a responsible corporate officer of the refiner, importer, or oxygenate blender, or in the case of a comprehensive survey program plan, by an officer of the organization coordinating the survey program.

(16)(i) No later than December 1 of the year preceding the year in which the surveys will be conducted, the contract with the surveyor to carry out the entire survey plan shall be in effect, and an amount of money necessary to carry out the entire survey plan shall be paid to the surveyor or placed into an escrow account with instructions to the escrow agent to pay the money over to the surveyor during the course of the conduct of the survey plan.

(ii) No later than December 15 of the year preceding the year in which the surveys will be conducted, the Administrator of EPA shall be given a copy of the contract with the surveyor, proof that the money necessary to carry out the plan has either been paid to the surveyor or placed into an escrow account, and if placed into an escrow account, a copy of the escrow agreement.

[59 FR 7813, Feb. 16, 1994, as amended at 59 FR 36963, July 20, 1994; 62 FR 12576, Mar. 17, 1997; 62 FR 68207, Dec. 31, 1997; 66 FR 37165, July 17, 2001; 71 FR 74568, Dec. 15, 2005; 71 FR 26699, May 8, 2006; 72 FR 8543, Feb. 26, 2007]

§ 80.69 Requirements for downstream oxygenate blending.

The requirements of this section apply to all reformulated gasoline blendstock for oxygenate blending, or RBOB, to which oxygenate is added at any oxygenate blending facility, except that paragraph (a)(7) of this section does not apply to adjusted VOC gasoline as defined in § 80.40(c).

(a) *Requirements for refiners and importers.* For any RBOB produced or imported, the refiner or importer of the RBOB shall:

(1) Produce or import the RBOB such that, when blended with a specified type and percentage of oxygenate, it meets the applicable standards for reformulated gasoline;

(2) In order to determine the properties of RBOB for purposes of calculating compliance with per-gallon or averaged standards, conduct tests on each batch of the RBOB by:

(i) Adding the specified type and amount of oxygenate to a representative sample of the RBOB; and

(ii) Determining the properties and characteristics of the resulting gasoline using the methodology specified in § 80.65(e);

(3) Carry out the independent analysis requirements specified in § 80.65(f);

(4) [Reserved]

(5) Transfer ownership of the RBOB only to an oxygenate blender who is registered with EPA as such, or to an intermediate owner with the restriction that it only be transferred to a registered oxygenate blender;

(6) Have a contract with each oxygenate blender who receives any RBOB produced or imported by the refiner or importer that requires the oxygenate blender, or, in the case of a contract with an intermediate owner, that requires the intermediate owner to require the oxygenate blender to:

(i) Comply with blender procedures that are specified by the contract and are calculated to assure blending with the proper type and amount of oxygenate;

(ii) Allow the refiner or importer to conduct the quality assurance sampling and testing required under this paragraph (a); and

(iii) Stop selling any gasoline found not to comply with the standards under

which the RBOB was produced or imported.

(7) Conduct a quality assurance sampling and testing program to be carried out at the facilities of each oxygenate blender who blends any RBOB produced or imported by the refiner or importer with any oxygenate, to determine whether the reformulated gasoline which has been produced through blending complies with the applicable standards, using the methodology specified in § 80.46 for this determination.

(i) The sampling and testing program shall be conducted as follows:

(A) All samples shall be collected subsequent to the addition of oxygenate, and either:

(*1*) Prior combining the resulting gasoline with any other gasoline; or

(*2*) In the case of truck splash blending, subsequent to the delivery of the gasoline to a retail outlet or wholesale purchaser-consumer facility provided that the three most recent deliveries to the retail outlet or wholesale purchaser facility were of gasoline produced using that refiner's or importer's RBOB, and provided that any discrepancy found through the retail outlet or wholesale purchaser facility sampling is followed-up with measures reasonably designed to discover the cause of the discrepancy; and

(B) Sampling and testing shall be at one of the following rates:

(*1*) In the case of RBOB which is blended with oxygenate in a gasoline storage tank, a rate of not less than one sample for every 400,000 barrels of RBOB produced or imported by that refiner or importer that is blended by that blender, or one sample every month, whichever is more frequent; or

(*2*) In the case of RBOB which is blended with oxygenate in gasoline delivery trucks through the use of computer-controlled in-line blending equipment, a rate of not less than one sample for every 200,000 barrels of RBOB produced or imported by that refiner or importer that is blended by that blender, or one sample every three months, whichever is more frequent; or

(*3*) In the case of RBOB which is blended with oxygenate in gasoline delivery trucks without the use of computer-controlled in-line blending equipment, a rate of not less than one sample for each 50,000 barrels of RBOB produced or imported by that refiner or importer which is blended, or one sample per month, whichever is more frequent;

(ii) In the event the test results for any sample indicate the gasoline does not comply with applicable standards (within the correlation ranges specified in § 80.65(e)(2)(i)), the refiner or importer shall:

(A) Immediately take steps to stop the sale of the gasoline that was sampled;

(B) Take steps which are reasonably calculated to determine the cause of the noncompliance and to prevent future instances of noncompliance;

(C) Increase the rate of sampling and testing to one of the following rates:

(*1*) In the case of RBOB which is blended with oxygenate in a gasoline storage tank, a rate of not less than one sample for every 200,000 barrels of RBOB produced or imported by that refiner or importer that is blended by that blender, or one sample every two weeks, whichever is more frequent; or

(*2*) In the case of RBOB which is blended with oxygenate in gasoline delivery trucks through the use of computer-controlled in-line blending equipment, a rate of not less than one sample for every 100,000 barrels of RBOB produced or imported by that refiner or importer that is blended by that blender, or one sample every two months, whichever is more frequent; or

(*3*) In the case of RBOB which is blended with oxygenate in gasoline delivery trucks without the use of computer-controlled in-line blending equipment, a rate of not less than one sample for each 25,000 barrels of RBOB produced or imported by that refiner or importer which is blended, or one sample every two weeks, whichever is more frequent;

(D) Continue the increased frequency of sampling and testing until the results of ten consecutive samples and tests indicate the gasoline complies with applicable standards, at which time the sampling and testing may be conducted at the original frequency;

(iii) This quality assurance program is in addition to any quality assurance requirements carried out by other parties;

(8)–(9) [Reserved]

(10) Specify in the product transfer documentation for the RBOB each oxygenate type or types and amount or range of amounts which, if blended with the RBOB will result in reformulated gasoline which:

(i) Has VOC, toxics, or NO_X emissions reduction percentages which are no lower than the percentages that formed the basis for the refiner's or importer's compliance determination for these parameters;

(ii) Has a benzene content and RVP level which are no higher than the values for these characteristics that formed the basis for the refiner's or importer's compliance determinations for these parameters; and

(iii) Will not cause the reformulated gasoline to violate any standard specified in § 80.41.

(11) Any refiner or importer who produces or imports RBOB may comply with the following alternative quality assurance requirement instead of the contract and quality assurance sampling and testing requirements in paragraphs (a)(6) and (a)(7) of this section:

(i) To comply with the alternative quality assurance requirement under this paragraph (a)(11), a refiner or importer must either arrange to have an independent surveyor conduct a comprehensive program of annual compliance surveys, or participate in the funding of an organization which arranges to have an independent surveyor conduct a comprehensive program of annual compliance surveys, to be carried out in accordance with a survey plan which has been approved by EPA.

(ii) The annual compliance surveys under this paragraph (a)(11) shall be:

(A) Planned and conducted by an independent surveyor that meets the requirements in § 80.68(c)(13)(i);

(B) Conducted at retail gasoline outlets in a specified reformulated gasoline covered area;

(C) Representative of all reformulated gasoline being dispensed in the specified reformulated gasoline covered area; and

(D) Designed to achieve at least the same level of quality assurance required under paragraph (a)(7) of this section.

(iii) The compliance survey program shall require the independent surveyor conducting the surveys to:

(A) Obtain gasoline samples in accordance with the survey plan approved under this paragraph (a)(11), or immediately notify EPA of any refusal of retail outlets to allow samples to be taken;

(B) Test or arrange for the samples to be tested for type and amount of oxygenate;

(C)(*1*) Obtain the product transfer documents associated with the gasoline sample from the retail outlet; or immediately notify EPA of any refusal of any party to provide product transfer documents that should be within their possession; and

(*2*) Immediately notify EPA of any case where the product transfer documents obtained from the retail outlet do not contain the information required in paragraph (a)(11)(vii)(A) of this section, or any case where the gasoline does not contain the type and/or minimum amount of oxygenate stated on the product transfer documents;

(D) Where the test results indicate that the gasoline does not contain the type and/or minimum amount of oxygenate stated on the product transfer documents:

(*1*) Determine the oxygenate blending facility that supplied the gasoline; and

(*2*) Obtain from the oxygenate blender documentation of the refiner's or importer's oxygenate blending instructions for the gasoline;

(E) Immediately notify EPA of any case where the test results obtained by the independent surveyor indicate that the gasoline does not contain the type and/or minimum amount of oxygenate designated for the RBOB in the refiner's or importer's blending instructions;

(F) Immediately notify EPA of any instances where a refiner, importer, terminal, distributor, carrier or retail outlet fails to cooperate in the manner described in paragraph (a)(11)(vi) of this section.

(G) Submit to EPA a report of each survey, within thirty days following completion of the survey, such report to include the following information:

(*1*) The identification of the person who conducted the survey;

(*2*) An attestation by an officer of the surveyor company that the survey was conducted in accordance with the survey plan and that the survey results are accurate;

(*3*) Identification of the party(ies) for whom the survey was conducted;

(*4*) The identification of the covered area surveyed;

(*5*) The dates on which the survey was conducted;

(*6*) The address of each facility at which a gasoline sample was collected and the date of collection;

(*7*) The results of the analyses of the samples for type and amount of oxygenate;

(*8*) The name and address of each laboratory where the gasoline samples were analyzed;

(*9*) A description of the methodology utilized to select the locations for sample collection and the number of samples collected; and

(*10*) For any samples excluded from the survey, a justification for such exclusion.

(H) Maintain all records relating to the surveys conducted under this paragraph (a)(11) for a period of at least 5 years; and

(I) At any time permit any representative of EPA to monitor the conduct of the surveys, including sample collection, transportation, storage, and analysis.

(iv) A survey plan under this paragraph (a)(11) must include:

(A) Identification of the party(ies) for whom the survey is to be conducted;

(B) Identification of the independent surveyor;

(C) A methodology for determining:

(*1*) When the samples will be collected;

(*2*) The sample collection locations; and

(*3*) The number of samples to be collected during the annual compliance period;

(D) A process for notifying oxygenate blenders and other downstream parties in the affected RFG area of the product transfer documentation requirements in paragraph (a)(11)(vii)(A) of this section; and

(E) Any other elements determined by EPA to be necessary to achieve the level of quality assurance required under paragraph (a)(11)(ii)(D) of this section.

(v) Any sampling and testing pursuant to a survey plan under this paragraph (a)(11) must be conducted in a manner consistent with the applicable provisions of §§ 80.8 and 80.46.

(vi)(A) Each refiner and importer who participates in the alternative quality assurance program under this paragraph (a)(11) must take all reasonable steps to ensure that each oxygenate blender, distributor, carrier and retail outlet cooperates in this program by allowing the independent surveyor to collect samples and by providing to the independent surveyor and/or EPA, upon request, copies of product transfer documents and other records or information regarding the source of any gasoline received, the destination of any gasoline distributed, the oxygenate blending instructions for the RBOB, and the rate (volume %) that oxygenate was blended into the gasoline.

(B) Reasonable steps under paragraph (a)(11)(vii) of this section must include, but typically should not be limited to, contractual agreements with any branded facilities of the refiner or importer, including any terminals, distributors, carriers and retail outlets, which require the branded facility to cooperate with the independent surveyor and/or EPA in the manner described in paragraph (a)(11)(vii)(A) of this section.

(vii)(A) Any terminal that blends oxygenate with RBOB which is produced or imported by any refiner or importer that complies with the alternative quality assurance requirement under this paragraph (a)(11), and any parties downstream from such oxygenate blending terminal, must include on product transfer documents information regarding the type and amount of oxygenate contained in the gasoline and identification of the oxygenate blending facility that blended the gasoline.

(B) If a party downstream from a refiner or importer that complies with the alternative quality assurance requirement under this paragraph (a)(11) fails to receive notice of the requirements in paragraph (a)(11)(vii)(A) of this section, upon notification from

EPA, the party must thereafter comply with the requirements in paragraph (a)(11)(vii)(A) of this section.

(viii) The procedure for obtaining EPA approval of a survey plan under this paragraph (a)(11), and for revocation of any such approval, are as follows:

(A) A detailed survey plan which complies with the requirements of this paragraph (a)(11) must be submitted to EPA, no later than September 1 of the year preceding the calendar year in which the surveys will be conducted;

(B) The survey plan must be signed by a responsible corporate officer of the refiner or importer, or responsible officer of the organization which arranges to have an independent surveyor conduct a program of compliance surveys, as applicable; and

(C) The survey plan must be sent to the following address: Director, Transportation and Regional Programs Division, U.S. Environmental Protection Agency, 1200 Pennsylvania Ave., NW., (6406J), Washington, DC 20460;

(D) EPA will send a letter to the party submitting a survey plan under this section, either approving or disapproving the survey plan;

(E) EPA may revoke any approval of a survey plan under this section for cause, including an EPA determination that the approved survey plan has proved to be inadequate in practice or that it was not diligently implemented;

(F) The approving official for an alternative quality assurance program under this section is the Director of the Transportation and Regional Programs Division, Office of Transportation and Air Quality.

(G) Any notifications required under this paragraph (a)(11) must be directed to the official designated in paragraph (a)(11)(viii)(F) of this section.

(ix)(A) No later than December 1 of the year preceding the year in which the surveys will be conducted, the contract with the independent surveyor shall be in effect, and an amount of money necessary to carry out the entire survey plan shall be paid to the independent surveyor or placed into an escrow account with instructions to the escrow agent to pay the money to the independent surveyor during the course of the conduct of the survey plan;

(B) No later than December 15 of the year preceding the year in which the surveys will be conducted, EPA must receive a copy of the contract with the independent surveyor, proof that the money necessary to carry out the survey plan has either been paid to the independent surveyor or placed into an escrow account, and, if placed into an escrow account, a copy of the escrow agreement, to be sent to the official designated in paragraph (a)(11)(viii)(F) of this section.

(x) A failure of any refiner or importer to fulfill or cause to be fulfilled any of the requirements of this paragraph (a)(11) will cause the option to use the alternative quality assurance requirements under this paragraph (a)(11) to be void *ab initio*.

(b) *Requirements for oxygenate blenders*. For all RBOB received by any oxygenate blender, the oxygenate blender shall:

(1) Add oxygenate of the type(s) and amount (or within the range of amounts) specified in the product transfer documents for the RBOB; and

(2) Meet the recordkeeping requirements specified in § 80.74.

(c) [Reserved]

(d) *Requirements for distributors dispensing RBOB into trucks for blending*. Any distributor who dispenses any RBOB into any truck which delivers gasoline to retail outlets or wholesale purchase-consumer facilities, shall for such RBOB so dispensed:

(1) Transfer the RBOB only to an oxygenate blender who has registered with the Administrator or EPA as such; and

(2) Obtain from the oxygenate blender the oxygenate blender's EPA registration number.

(e) *Additional requirements for oxygenate blenders who blend oxygenate in trucks*. Any oxygenate blender who obtains any RBOB in any gasoline delivery truck shall on each occasion it obtains RBOB from a distributor, supply

the distributor with the oxygenate blender's EPA registration number.

[59 FR 7813, Feb. 16, 1994, as amended at 59 FR 36964, July 20, 1994; 62 FR 60135, Nov. 6, 1997; 66 FR 37165, July 17, 2001; 71 FR 74569, Dec. 15, 2005; 71 FR 26700, May 8, 2006; 71 FR 31959, June 2, 2006]

§ 80.70 Covered areas.

For purposes of subparts D, E, and F of this part, the covered areas are as follows:

(a) The Los Angeles-Anaheim-Riverside, California, area, comprised of:

(1) Los Angeles County;

(2) Orange County;

(3) Ventura County;

(4) That portion of San Bernadino County that lies south of latitude 35 degrees, 10 minutes north and west of longitude 115 degrees, 45 minutes west; and

(5) That portion of Riverside County, which lies to the west of a line described as follows:

(i) Beginning at the northeast corner of Section 4, Township 2 South, Range 5 East, a point on the boundary line common to Riverside and San Bernadino Counties;

(ii) Then southerly along section lines to the centerline of the Colorado River Aqueduct;

(iii) Then southeasterly along the centerline of said Colorado River Aqueduct to the southerly line of Section 36, Township 3 South, Range 7 East;

(iv) Then easterly along the township line to the northeast corner of Section 6, Township 4 South, Range 9 East;

(v) Then southerly along the easterly line of Section 6 to the southeast corner thereof;

(vi) Then easterly along section lines to the northeast corner of Section 10, Township 4 South, Range 9 East;

(vii) Then southerly along section lines to the southeast corner of Section 15, Township 4 South, Range 9 East;

(viii) Then easterly along the section lines to the northeast corner of Section 21, Township 4 South, Range 10 East;

(ix) Then southerly along the easterly line of Section 21 to the southeast corner thereof;

(x) Then easterly along the northerly line of Section 27 to the northeast corner thereof;

(xi) Then southerly along section lines to the southeast corner of Section 34, Township 4 South, Range 10 East;

(xii) Then easterly along the township line to the northeast corner of Section 2, Township 5 South, Range 10 East;

(xiii) Then southerly along the easterly line of Section 2, to the southeast corner thereof;

(xiv) Then easterly along the northerly line of Section 12 to the northeast corner thereof;

(xv) Then southerly along the range line to the southwest corner of Section 18, Township 5 South, Range 11 East;

(xvi) Then easterly along section lines to the northeast corner of Section 24, Township 5 South, Range 11 East; and

(xvii) Then southerly along the range line to the southeast corner of Section 36, Township 8 South, Range 11 East, a point on the boundary line common to Riverside and San Diego Counties.

(b) San Diego County, California.

(c) The Greater Connecticut area, comprised of:

(1) The following Connecticut counties:

(i) Hartford;

(ii) Middlesex;

(iii) New Haven;

(iv) New London;

(v) Tolland;

(vi) Windham; and

(2) Portions of certain Connecticut counties, described as follows:

(i) In Fairfield County, the City of Shelton; and

(ii) In Litchfield County, all cities and townships except the towns of Bridgewater and New Milford.

(d) The New York-Northern New Jersey-Long Island-Connecticut area, comprised of:

(1) Portions of certain Connecticut counties, described as follows:

(i) In Fairfield County, all cities and townships except Shelton City;

(ii) In Litchfield County, the towns of Bridgewater and New Milford;

(2) The following New Jersey counties:

(i) Bergen;

(ii) Essex;

(iii) Hudson;

(iv) Hunterdon;

(v) Middlesex;

(vi) Monmouth;
(vii) Morris;
(viii) Ocean;
(ix) Passaic;
(x) Somerset;
(xi) Sussex;
(xii) Union; and
(3) The following New York counties:
(i) Bronx;
(ii) Kings;
(iii) Nassau;
(iv) New York (Manhattan);
(v) Queens;
(vi) Richmond;
(vii) Rockland;
(viii) Suffolk;
(ix) Westchester;
(x) Orange; and
(xi) Putnam.

(e) The Philadelphia-Wilmington-Trenton area, comprised of:
(1) The following Delaware counties:
(i) New Castle; and
(ii) Kent;
(2) Cecil County, Maryland;
(3) The following New Jersey counties:
(i) Burlington;
(ii) Camden;
(iii) Cumberland;
(iv) Gloucester;
(v) Mercer;
(vi) Salem; and
(4) The following Pennsylvania counties:
(i) Bucks;
(ii) Chester;
(iii) Delaware;
(iv) Montgomery; and
(v) Philadelphia.

(f) The Chicago-Gary-Lake County, Illinois-Indiana-Wisconsin area, comprised of:
(1) The following Illinois counties:
(i) Cook;
(ii) Du Page;
(iii) Kane;
(iv) Lake;
(v) McHenry;
(vi) Will;
(2) Portions of certain Illinois counties, described as follows:
(i) In Grundy County, the townships of Aux Sable and Goose Lake; and
(ii) In Kendall County, Oswego township; and
(3) The following Indiana counties:
(i) Lake; and
(ii) Porter.

(g) The Baltimore, Maryland area, comprised of:
(1) The following Maryland counties:
(i) Anne Arundel;
(ii) Baltimore;
(iii) Carroll;
(iv) Harford;
(v) Howard; and
(2) The City of Baltimore.

(h) The Houston-Galveston-Brazoria, Texas area, comprised of the following Texas counties:
(1) Brazoria;
(2) Fort Bend;
(3) Galveston;
(4) Harris;
(5) Liberty;
(6) Montgomery;
(7) Waller; and
(8) Chambers.

(i) The Milwaukee-Racine, Wisconsin area, comprised of the following Wisconsin counties:
(1) Kenosha;
(2) Milwaukee;
(3) Ozaukee;
(4) Racine;
(5) Washington; and
(6) Waukesha.

(j) Any other area classified under 40 CFR part 81, subpart C as a marginal, moderate, serious, or severe ozone nonattainment area may be included as a covered area on petition of the Governor of the State in which the area is located. The ozone nonattainment areas listed in this paragraph (j) opted into the reformulated gasoline program prior to the start of the reformulated gasoline program. These areas are covered areas for purposes of subparts D, E, and F of this part. The geographic extent of each covered area listed in this paragraph (j) shall be the nonattainment area boundaries as specified in 40 CFR part 81, subpart C.
(1) Sussex County, Delaware;
(2) District of Columbia portion of the Washington ozone nonattainment area;
(3) The following Kentucky counties:
(i) Boone;
(ii) Campbell;
(iii) Jefferson; and
(iv) Kenton;
(4) Portions of the following Kentucky counties:
(i) Portion of Bullitt County described as follows:

(A) Beginning at the intersection of Ky 1020 and the Jefferson-Bullitt County Line proceeding to the east along the county line to the intersection of county road 567 and the Jefferson-Bullitt County Line;

(B) Proceeding south on county road 567 to the junction with Ky 1116 (also known as Zoneton Road);

(C) Proceeding to the south on KY 1116 to the junction with Hebron Lane;

(D) Proceeding to the south on Hebron Lane to Cedar Creek;

(E) Proceeding south on Cedar Creek to the confluence of Floyds Fork turning southeast along a creek that meets Ky 44 at Stallings Cemetery;

(F) Proceeding west along Ky 44 to the eastern most point in the Shepherdsville city limits;

(G) Proceeding south along the Shepherdsville city limits to the Salt River and west to a point across the river from Mooney Lane;

(H) Proceeding south along Mooney Lane to the junction of Ky 480;

(I) Proceeding west on Ky 480 to the junction with Ky 2237;

(J) Proceeding south on Ky 2237 to the junction with Ky 61 and proceeding north on Ky 61 to the junction with Ky 1494;

(K) Proceeding south on Ky 1494 to the junction with the perimeter of the Fort Knox Military Reservation;

(L) Proceeding north along the military reservation perimeter to Castleman Branch Road;

(M) Proceeding north on Castleman Branch Road to Ky 44;

(N) Proceeding a very short distance west on Ky 44 to a junction with Ky 1020; and

(O) Proceeding north on Ky 1020 to the beginning.

(ii) Portion of Oldham County described as follows:

(A) Beginning at the intersection of the Oldham-Jefferson County Line with the southbound lane of Interstate 71;

(B) Proceeding to the northeast along the southbound lane of Interstate 71 to the intersection of Ky 329 and the southbound lane of Interstate 71;

(C) Proceeding to the northwest on Ky 329 to the intersection of Zaring Road on Ky 329;

(D) Proceeding to the east-northeast on Zaring Road to the junction of Cedar Point Road and Zaring Road;

(E) Proceeding to the north-northeast on Cedar Point Road to the junction of Ky 393 and Cedar Point Road;

(F) Proceeding to the south-southeast on Ky 393 to the junction of county road 746 (the road on the north side of Reformatory Lake and the Reformatory);

(G) Proceeding to the east-northeast on county road 746 to the junction with Dawkins Lane (also known as Saddlers Mill Road) and county road 746;

(H) Proceeding to follow an electric power line east-northeast across from the junction of county road 746 and Dawkins Lane to the east-northeast across Ky 53 on to the La Grange Water Filtration Plant;

(I) Proceeding on to the east-southeast along the power line then south across Fort Pickens Road to a power substation on Ky 146;

(J) Proceeding along the power line south across Ky 146 and the Seaboard System Railroad track to adjoin the incorporated city limits of La Grange;

(K) Then proceeding east then south along the La Grange city limits to a point abutting the north side of Ky 712;

(L) Proceeding east-southeast on Ky 712 to the junction of Massie School Road and Ky 712;

(M) Proceeding to the south-southwest and then north-northwest on Massie School Road to the junction of Ky 53 and Massie School Road;

(N) Proceeding on Ky 53 to the north-northwest to the junction of Moody Lane and Ky 53;

(O) Proceeding on Moody Lane to the south-southwest until meeting the city limits of La Grange;

(P) Then briefly proceeding north following the La Grange city limits to the intersection of the northbound lane of Interstate 71 and the La Grange city limits;

(Q) Proceeding southwest on the northbound lane of Interstate 71 until intersecting with the North Fork of Currys Fork;

(R) Proceeding south-southwest beyond the confluence of Currys Fork to the south-southwest beyond the confluence of Floyds Fork continuing on

to the Oldham-Jefferson County Line; and

(S) Proceeding northwest along the Oldham-Jefferson County Line to the beginning.

(5) [Reserved]

(6) The following Maryland counties:

(i) Calvert;

(ii) Charles;

(iii) Frederick;

(iv) Montgomery;

(v) Prince Georges;

(vi) Queen Anne's; and

(vii) Kent;

(7) The entire State of Massachusetts;

(8) The following New Hampshire counties:

(i) Strafford;

(ii) Merrimack;

(iii) Hillsborough; and

(iv) Rockingham;

(9) The following New Jersey counties:

(i) Atlantic;

(ii) Cape May; and

(iii) Warren;

(10) The following New York counties:

(i) Dutchess;

(ii) The portion of Essex County that consists of the portion of Whiteface Mountain above 4,500 feet in elevation.

(11) The entire State of Rhode Island;

(12) The following Texas counties: and

(i) Collin;

(ii) Dallas;

(iii) Denton; and

(iv) Tarrant;

(13) The following Virginia areas:

(i) Alexandria;

(ii) Arlington County;

(iii) Fairfax;

(iv) Fairfax County;

(v) Falls Church;

(vi) Loudoun County;

(vii) Manassas;

(viii) Manassas Park;

(ix) Prince William County;

(x) Stafford County;

(xi) Charles City County;

(xii) Chesterfield County;

(xiii) Colonial Heights;

(xiv) Hanover County;

(xv) Henrico County;

(xvi) Hopewell;

(xvii) Richmond;

(xviii) Chesapeake;

(xix) Hampton;

(xx) James City County;

(xxi) Newport News;

(xxii) Norfolk;

(xxiii) Poquoson;

(xxiv) Portsmouth;

(xxv) Suffolk;

(xxvi) Virginia Beach;

(xxvii) Williamsburg; and

(xxviii) York County.

(k) The ozone nonattainment areas included in this paragraph (k) have opted into the reformulated gasoline program since the beginning of the program, and are covered areas for purposes of subparts D, E, and F of this part. The geographic extent of each covered area listed in this paragraph (k) shall be the nonattainment area boundaries as specified in 40 CFR part 81, subpart C.

(1) The St. Louis, Missouri, ozone nonattainment area is a covered area beginning June 1, 1999. The prohibitions of section 211(k)(5) of the Clean Air Act apply to all persons in the St. Louis, Missouri, covered area, other than retailers and wholesale purchaser-consumers, beginning May 1, 1999. The prohibitions of section 211(k)(5) of the Clean Air Act apply to retailers and wholesale purchase-consumers in the St. Louis, Missouri, area beginning June 1, 1999.

(2) The Illinois portion of the St. Louis, Illinois-Missouri ozone nonattainment area is a covered area beginning on July 1, 2007. The prohibitions of section 211(k)(5) of the Clean Air Act apply to all persons other than retailers and wholesale purchaser-consumers in the Illinois portion of the St. Louis, Illinois-Missouri ozone nonattainment area beginning on June 1, 2007. The prohibitions of section 211(k)(5) of the Clean Air Act apply to retailers and wholesale purchaser-consumers in the Illinois portion of the St. Louis, Illinois-Missouri ozone nonattainment area beginning July 1, 2007.

(l) Upon the effective date for removal of any opt-in area or portion of an opt-in area included in an approved petition under § 80.72(a), the geographic area covered by such approval shall no longer be considered a covered area for purposes of subparts D, E, and F of this part.

(m) Effective one year after an area has been reclassified as a Severe ozone nonattainment area under section 181(b) of the Clean Air Act, such Severe area shall also be a covered area under the reformulated gasoline program. The ozone nonattainment areas identified pursuant to this paragraph (m) were reclassified as Severe ozone nonattainment areas, and are covered areas for purposes of subparts D, E, and F of this part. The geographic extent of each covered area identified pursuant to this paragraph (m) shall be the nonattainment area boundaries as specified in 40 CFR part 81, subpart C.

(1) An area identified as a covered area pursuant to this paragraph (m), whose classification as a severe nonattainment area under the 1-hour ozone NAAQS is removed as a result of removal of the 1-hour ozone NAAQS, remains a covered area as follows:

(i) Prior to redesignation as attainment for the 8-hour ozone NAAQS the area remains a covered area;

(ii) After redesignation as attainment for the 8-hour ozone NAAQS. [Reserved]

(2) An area identified as a covered area pursuant to this paragraph (m), whose classification as a severe nonattainment area under the 1-hour ozone NAAQS is removed as a result of redesignation to attainment for the 1-hour ozone NAAQS, remains a covered area as follows: [Reserved]

[59 FR 7813, Feb. 16, 1994, as amended at 59 FR 36964, July 20, 1994; 60 FR 2699, Jan. 11, 1995; 60 FR 35491, July 10, 1995; 61 FR 35680, July 8, 1996; 62 FR 30270, June 3, 1997; 63 FR 43049, Aug. 11, 1998; 63 FR 52104, Sept. 29, 1998; 64 FR 10371, Mar. 3, 1999; 67 FR 38403, June 4, 2002; 70 FR 71705, Nov. 29, 2005; 72 FR 20242, Apr. 24, 2007]

§ 80.71 Descriptions of VOC-control regions.

(a) Reformulated gasoline covered areas which are located in the following States are included in VOC-Control Region 1:

Alabama	Georgia
Arizona	Kansas
Arkansas	Louisiana
California	Maryland
Colorado	Mississippi
District of Columbia	Missouri
Florida	Nevada
New Mexico	Tennessee
North Carolina	Texas
Oklahoma	Utah
Oregon	Virginia
South Carolina	

(b) Reformulated gasoline covered areas which are located in the following States are included in VOC-Control Region 2:

Connecticut	New Hampshire
Delaware	New Jersey
Idaho	New York
Illinois	North Dakota
Indiana	Ohio
Iowa	Pennsylvania
Kentucky	Rhode Island
Maine	South Dakota
Massachusetts	Vermont
Michigan	Washington
Minnesota	West Virginia
Montana	Wisconsin
Nebraska	Wyoming

(c) Reformulated gasoline covered areas which are partially in VOC Control Region 1 and partially in VOC Control Region 2 shall be included in VOC Control Region 1, except in the case of the Philadelphia-Wilmington-Trenton CMSA which shall be included in VOC Control Region 2.

§ 80.72 Procedures for opting out of the covered areas.

(a) In accordance with paragraph (b) of this section, the Administrator may approve a petition from a state asking for removal of any opt-in area, or portion of an opt-in area, from inclusion as a covered area under § 80.70. If the Administrator approves a petition, he or she shall set an effective date as provided in paragraph (c) of this section. The Administrator shall notify the state in writing of the Agency's action on the petition and the effective date of the removal when the petition is approved.

(b) To be approved under paragraph (a) of this section, a petition must be signed by the Governor of a State, or his or her authorized representative, and must include the following:

(1) A geographic description of each opt-in area, or portion of each opt-in area, which is covered by the petition;

(2) A description of all ways in which reformulated gasoline is relied upon as a control measure in any approved State or local implementation plan or plan revision, or in any submission to

the Agency containing any proposed plan or plan revision (and any associated request for redesignation) that is pending before the Agency when the petition is submitted; and

(3) For any opt-in areas covered by the petition for which reformulated gasoline is relied upon as a control measure as described under paragraph (b)(2) of this section, the petition shall include the following information:

(i) Identify whether the State is withdrawing any such pending plan submission;

(ii)(A) Identify whether the State intends to submit a revision to any such approved plan provision or pending plan submission that does not rely on reformulated gasoline as a control measure, and describe the alternative air quality measures, if any, that the State plans to use to replace reformulated gasoline as a control measure;

(B) A description of the current status of any proposed revision to any such approved plan provision or pending plan submission, as well as a projected schedule for submission of such proposed revision;

(iii) If the State is not withdrawing any such pending plan submission and does not intend to submit a revision to any such approved plan provision or pending plan submission, describe why no revision is necessary;

(iv) If reformulated gasoline is relied upon in any pending plan submission, other than as a contingency measure consisting of a future opt-in, and the Agency has found such pending plan submission complete or made a protectiveness finding under 40 CFR 51.448 and 93.128, demonstrate whether the removal of the reformulated gasoline program will affect the completeness and/or protectiveness determinations;

(4) The Governor of a State, or his or her authorized representative, shall submit additional information upon request of the Administrator,

(c)(1) For opt-out petitions received on or before December 31, 1997, except as provided in paragraphs (c)(2) and (c)(3) of this section, the Administrator shall set an effective date for removal of an area under paragraph (a) of this section as requested by the Governor, but no less than 90 days from the Agency's written notification to the state approving the opt-out petition, and no later than December 31, 1999.

(2) For opt-out petitions received on or before December 31, 1997, except as provided in paragraph (c)(3) of this section, where RFG is contained as an element of any plan or plan revision that has been approved by the Agency, other than as a contingency measure consisting of a future opt-in, then the effective date under paragraph (a) of this section shall be the date requested by the Governor, but no less than 90 days from the effective date of Agency approval of a revision to the plan that removes RFG as a control measure.

(3)(i) The Administrator may extend the deadline for submitting opt-out petitions in paragraphs (c)(1) and (2) of this section for a state if:

(A) The Governor or his authorized representative requests an extension prior to December 31, 1997;

(B) The request indicates that there is active or pending legislation before the state legislature that was introduced prior to March 28, 1997;

(C) The legislation is concerning opting out of or remaining in the reformulated gasoline program; and

(D) The request demonstrates that the legislation cannot reasonably be acted upon prior to December 31, 1997.

(ii) The Administrator may extend the deadline until no later than May 31, 1998. If the deadline is extended, then opt-out requests from that state received during the extension shall be considered under the provisions of paragraphs (c)(1) and (2) of this section.

(4) For opt-out petitions received January 1, 1998 through December 31, 2003, except as provided in paragraph (c)(5) of this section, the Administrator shall set an effective date for removal of an area under paragraph (a) of this section as requested by the Governor but no earlier than January 1, 2004 or 90 days from the Agency's written notification to the state approving the opt-out petition, whichever date is later.

(5) For opt-out petitions received January 1, 1998 through December 31, 2003, where RFG is contained as an element of any plan or plan revision that has been approved by the Agency, other than as a contingency measure consisting of a future opt-in, then the effective date for removal of an area

under paragraph (a) of this section shall be the date requested by the Governor, but no earlier than January 1, 2004, or 90 days from the effective date of Agency approval of a revision to the plan that removes RFG as a control measure, whichever date is later.

(6) For opt-out petitions received on or after January 1, 2004, except as provided in paragraph (c)(7) of this section, the Administrator shall set an effective date for removal of an area as requested by the Governor, but no less than 90 days from the Agency's written notification to the state approving the opt-out petition.

(7) For opt-out petitions received on or after January 1, 2004, where RFG is contained as an element of any plan or plan revision that has been approved by the Agency, other than as a contingency measure consisting of a future opt-in, then the effective date for removal of an area under paragraph (a) of this section shall be the date requested by the Governor, but no less than 90 days from the effective date of Agency approval of a revision to the plan that removes RFG as a control measure.

(d) The Administrator shall publish a notice in the FEDERAL REGISTER announcing the approval of any petition under paragraph (a) of this section, and the effective date for removal.

[61 FR 35680, July 8, 1996, as amended at 62 FR 54558, Oct. 20, 1997]

§ 80.73 Inability to produce conforming gasoline in extraordinary circumstances.

In appropriate extreme and unusual circumstances (*e.g.*, natural disaster or Act of God) which are clearly outside the control of the refiner, importer, or oxygenate blender and which could not have been avoided by the exercise of prudence, diligence, and due care, EPA may permit a refiner, importer, or oxygenate blender, for a brief period, to distribute gasoline which does not meet the requirements for reformulated gasoline, or does not contain the type(s) and amount(s) of oxygenate required under § 80.69(b)(1), if:

(a) It is in the public interest to do so (e.g., distribution of the nonconforming gasoline is necessary to meet projected shortfalls which cannot otherwise be compensated for);

(b) The refiner, importer, or oxygenate blender exercised prudent planning and was not able to avoid the violation and has taken all reasonable steps to minimize the extent of the nonconformity;

(c) The refiner, importer, or oxygenate blender can show how the requirements for reformulated gasoline will be expeditiously achieved;

(d) The refiner, importer, or oxygenate blender agrees to make up air quality detriment associated with the nonconforming gasoline, where practicable; and

(e) The refiner, importer, or oxygenate blender pays to the U.S. Treasury an amount equal to the economic benefit of the nonconformity minus the amount expended, pursuant to paragraph (d) of this section, in making up the air quality detriment.

[38 FR 1255, Jan. 10, 1973, as amended at 71 FR 26700, May 8, 2006]

§ 80.74 Recordkeeping requirements.

All parties in the gasoline distribution network, as described in this section, shall maintain records containing the information as required in this section. These records shall be retained for a period of five years from the date of creation, and shall be delivered to the Administrator of EPA or to the Administrator's authorized representative upon request.

(a) *All regulated parties.* Any refiner, importer, oxygenate blender, carrier, distributor, reseller, retailer, or wholesale-purchaser who sells, offers for sale, dispenses, supplies, offers for supply, stores, transports, or causes the transportation of any reformulated gasoline or RBOB, shall maintain records containing the following information:

(1) The product transfer documentation for all reformulated gasoline or RBOB for which the party is the transferor or transferee; and

(2) For any sampling and testing on RBOB or reformulated gasoline:

(i) The location, date, time, and storage tank or truck identification for each sample collected;

(ii) The identification of the person who collected the sample and the person who performed the testing;

(iii) The results of the tests; and

(iv) The actions taken to stop the sale of any gasoline found not to be in compliance, and the actions taken to identify the cause of any noncompliance and prevent future instances of noncompliance.

(b) *Refiners and importers*. In addition to other requirements of this section, any refiner and importer shall, for all reformulated gasoline and RBOB produced or imported, maintain records containing the following information:

(1) Results of the tests to determine reformulated gasoline properties and characteristics specified in § 80.65;

(2) [Reserved]

(3) The volume of gasoline associated with each of the above test results using the method normally employed at the refinery or import facility for this purpose;

(4) In the case of RBOB:

(i) The results of tests to ensure that, following blending, RBOB meets applicable standards; and

(ii) Each contract with each oxygenate blender to whom the refiner or importer transfers RBOB; or

(iii) Compliance calculations described in § 80.69(a)(8) based on an assumed addition of oxygenate;

(5) In the case of any refinery or importer subject to the simple model standards, the calculations used to determine the 1990 baseline levels of sulfur, T–90, and olefins, and the calculations used to determine compliance with the standards for these parameters;

(6) In the case of any refinery or importer subject to the complex model standards before January 1, 1998, the calculations used to determine the baseline levels of VOC, toxics, and NO_X emissions performance; and

(7) In the case of any gasoline classified as previously certified gasoline under the terms of § 80.65(i):

(i) Results of the tests to determine the properties and volume of the previously certified gasoline when received at the refinery; and

(ii) Records that reflect the storage and movement of the previously certified gasoline within the refinery to the point the previously certified gasoline is used to produce reformulated gasoline or RBOB;

(8) In the case of butane blended into reformulated gasoline or RBOB under § 80.82, documentation of:

(i) The volume of butane added;

(ii) The volume of reformulated gasoline or RBOB both prior to and subsequent to the butane blending;

(iii) The purity and properties of the butane specified in § 80.82(c) and (d), as appropriate;

(iv) Compliance with the requirements of § 80.82; and

(9) In the case of any imported GTAB, documents that reflect the storage and physical movement of the GTAB from the point of importation to the point of blending to produce reformulated gasoline.

(10) In the case of any interface or transmix used to produce reformulated gasoline or RBOB under § 80.84, records that reflect the results of any sampling and testing of RFG or RBOB required under § 80.84.

(i) Pipelines must keep records showing that interface was designated in the proper manner, according to the designations listed in § 80.84(b)(1);

(ii) Transmix processors and transmix blenders must keep records showing that their transmix meets the definition in § 80.84(a)(2), or contains gasoline and distillate fuel only from the sources listed in § 80.84(e);

(iii) Transmix processors must keep records showing the volumes of reformulated gasoline or RBOB recovered from transmix and the type and amount of any blendstock added, if applicable; and

(iv) Transmix blenders must keep records showing compliance with the quality assurance program and/or sampling and testing requirements in § 80.84(d)(2) or (d)(3), and for each batch of reformulated gasoline or RBOB with which transmix is blended, the volume of the batch, and the volume of transmix blended into the batch;

(c) *Refiners and importers of averaged gasoline*. In addition to other requirements of this section, any refiner or importer who produces or imports any reformulated gasoline for which compliance with one or more applicable standard is determined on an average shall maintain records containing the following information:

(1) The calculations used to determine compliance with the relevant standards on average, for each averaging period and for each quantity of gasoline for which standards must be separately achieved; and

(2) For any credits bought, sold, traded or transferred pursuant to § 80.67(h), the dates of the transactions, the names and EPA registration numbers of the parties involved, and the number of credits transferred.

(d) *Oxygenate blenders*. Any oxygenate blender who blends any oxygenate with any RBOB shall, for each occasion such blending occurs, maintain records containing the following:

(i) The date, time, location, and identification of the blending tank or truck in which the blending occurred;

(ii) The volume and oxygenate requirements of the RBOB to which oxygenate was added; and

(iii) The volume, type, and purity of the oxygenate which was added, and documents which show the source(s) of the oxygenate used.

(e) *Distributors who dispense RBOB into trucks*. In addition to other requirements of this section, any distributor who dispenses any RBOB into a truck used for delivering gasoline to retail outlets shall, for each occasion RBOB is dispensed into such a truck, obtain records identifying:

(1) The name and EPA registration number of the oxygenate blender that received the RBOB; and

(2) The volume and oxygenate requirements of the RBOB dispensed.

(f) [Reserved]

(g) *Retailers before January 1, 1998*. Prior to January 1, 1998 any retailer that sells or offers for sale any reformulated gasoline shall maintain at each retail outlet the product transfer documentation for the most recent three deliveries to the retail outlet of each grade of reformulated gasoline sold or offered for sale at the retail outlet, and shall make such documentation available to any person conducting any gasoline compliance survey pursuant to § 80.68.

[59 FR 7813, Feb. 16, 1994, as amended at 66 FR 67106, Dec. 28, 2001; 71 FR 74569, Dec. 15, 2005; 71 FR 26700, May 8, 2006; 71 FR 31961, June 2, 2006]

§ 80.75 Reporting requirements.

Any refiner or importer shall report as specified in this section, and shall report such other information as the Administrator may require.

(a) *Quarterly reports for reformulated gasoline*. Any refiner or importer that produces or imports any reformulated gasoline or RBOB shall submit quarterly reports to the Administrator for each refinery at which such reformulated gasoline or RBOB was produced and for all such reformulated gasoline or RBOB imported by each importer.

(1) The quarterly reports shall be for all such reformulated gasoline or RBOB produced or imported during the following time periods:

(i) The first quarterly report shall include information for reformulated gasoline or RBOB produced or imported from January 1 through March 31, and shall be submitted by May 31 of each year beginning in 1995;

(ii) The second quarterly report shall include information for reformulated gasoline or RBOB produced or imported from April 1 through June 30, and shall be submitted by August 31 of each year beginning in 1995;

(iii) The third quarterly report shall include information for reformulated gasoline or RBOB produced or imported from July 1 through September 30, and shall be submitted by November 30 of each year beginning in 1995; and

(iv) The fourth quarterly report shall include information for reformulated gasoline or RBOB produced or imported from October 1 through December 31, and shall be submitted by the last day of February of each year beginning in 1996.

(2) The following information shall be included in each quarterly report for each batch of reformulated gasoline or RBOB which is included under paragraph (a)(1) of this section:

(i) The batch number;

(ii) The date of production;

(iii) The volume of the batch;

(iv) The grade of gasoline produced (i.e., premium, mid-grade, or regular);

(v) For any refiner or importer:

(A) Each designation of the gasoline, pursuant to § 80.65; and

(B) The properties, pursuant to §§ 80.65 and 80.66;

(vi) For any importer, the PADD in which the import facility is located;

(vii) [Reserved]

(viii) In the case of any previously certified gasoline used in a refinery operation under the terms of § 80.65(i), the following information relative to the previously certified gasoline when received at the refinery:

(A) Identification of the previously certified gasoline as such;

(B) The batch number assigned by the receiving refinery;

(C) The date of receipt; and

(D) The volume, properties and designation of the batch.

(ix) In the case of butane blended with reformulated gasoline or RBOB under § 80.82:

(A) Identification of the butane batch as complying with the provisions of § 80.82;

(B) Identification of the butane batch as commercial or non-commercial grade butane;

(C) The batch number of the butane;

(D) The date of production of the gasoline produced using the butane batch;

(E) The volume of the butane batch;

(F) The properties of the butane batch specified by the butane supplier, or the properties specified in § 80.82(c) or (d), as appropriate;

(G) The volume of the gasoline batch subsequent to the butane blending; and

(x) In the case of any imported GTAB, identification of the gasoline as GTAB.

(3) Information pertaining to gasoline produced or imported during 1994 shall be included in the first quarterly report in 1995.

(b) *Reports for gasoline or RBOB produced or imported under the simple model*—(1) *RVP averaging reports.* (i) Any refiner or importer that produced or imported any reformulated gasoline or RBOB under the simple model that was to meet RVP standards on average (''averaged reformulated gasoline'') shall submit to the Administrator, with the third quarterly report, a report for each refinery or importer for such averaged reformulated gasoline or RBOB produced or imported during the previous RVP averaging period. This information shall be reported separately for the following categories:

(A) Gasoline or RBOB which is designated as VOC-controlled intended for areas in VOC-Control Region 1; and

(B) Gasoline or RBOB which is designated as VOC-controlled intended for VOC-Control Region 2.

(ii) The following information shall be reported:

(A) The total volume of averaged reformulated gasoline or RBOB in gallons;

(B) The compliance total value for RVP; and

(C) The actual total value for RVP.

(2) *Sulfur, olefins and T90 averaging reports.* (i) Any refiner or importer that produced or imported any reformulated gasoline or RBOB under the simple model shall submit to the Administrator, with the fourth quarterly report, a report for such reformulated gasoline or RBOB produced or imported during the previous year:

(A) For each refinery or importer; or

(B) In the case of refiners who operate more than one refinery, for each grouping of refineries as designated by the refiner pursuant to § 80.41(h)(2)(iii).

(ii) The following information shall be reported:

(A) The total volume of reformulated gasoline or RBOB in gallons;

(B) The applicable sulfur content standard under § 80.41(h)(2)(i) in parts per million;

(C) The average sulfur content in parts per million;

(D) The difference between the applicable sulfur content standard under § 80.41(h)(2)(i) in parts per million and the average sulfur content under paragraph (b)(2)(ii)(C) of this section in parts per million, indicating whether the average is greater or lesser than the applicable standard;

(E) The applicable olefin content standard under § 80.41(h)(2)(i) in volume percent;

(F) The average olefin content in volume percent;

(G) The difference between the applicable olefin content standard under § 80.41(h)(2)(i) in volume percent and the average olefin content under paragraph (b)(2)(ii)(F) of this section in volume percent, indicating whether the average is greater or lesser than the applicable standard;

(H) The applicable T90 distillation point standard under § 80.41(h)(2)(i) in degrees Fahrenheit;

(I) The average T90 distillation point in degrees Fahrenheit; and

(J) The difference between the applicable T90 distillation point standard under § 80.41(h)(2)(i) in degrees Fahrenheit and the average T90 distillation point under paragraph (b)(2)(ii)(I) of this section in degrees Fahrenheit, indicating whether the average is greater or lesser than the applicable standard.

(c) *VOC emissions performance averaging reports.* (1) Any refiner or importer that produced or imported any reformulated gasoline or RBOB under the complex model that was to meet the VOC emissions performance standards on average (''averaged reformulated gasoline'') shall submit to the Administrator, with the third quarterly report, a report for each refinery or importer for such averaged reformulated gasoline produced or imported during the previous VOC averaging period. This information shall be reported separately for the following categories:

(i) Gasoline or RBOB which is designated as VOC-controlled intended for areas in VOC-Control Region 1; and

(ii) Gasoline or RBOB which is designated as VOC-controlled intended for VOC-Control Region 2.

(2) The following information shall be reported:

(i) The total volume of averaged reformulated gasoline or RBOB in gallons;

(ii) The compliance total value for VOC emissions performance; and

(iii) The actual total value for VOC emissions performance.

(d) *Benzene content averaging reports.* (1) Any refiner or importer that produced or imported any reformulated gasoline or RBOB that was to meet the benzene content standards on average (''averaged reformulated gasoline'') shall submit to the Administrator, with the fourth quarterly report, a report for each refinery or importer for such averaged reformulated gasoline that was produced or imported during the previous toxics averaging period.

(2) The following information shall be reported:

(i) The volume of averaged reformulated gasoline or RBOB in gallons;

(ii) The compliance total content of benzene;

(iii) The actual total content of benzene;

(iv) The number of benzene credits generated as a result of actual total benzene being less than compliance total benzene;

(v) The number of benzene credits required as a result of actual total benzene being greater than compliance total benzene;

(vi) The number of benzene credits transferred to another refinery or importer; and

(vii) The number of benzene credits obtained from another refinery or importer.

(e) *Toxics emissions performance averaging reports.* (1) Any refiner or importer that produced or imported any reformulated gasoline or RBOB that was to meet the toxics emissions performance standards on average (''averaged reformulated gasoline'') shall submit to the Administrator, with the fourth quarterly report, a report for each refinery or importer for such averaged reformulated gasoline that was produced or imported during the previous toxics averaging period.

(2) The following information shall be reported:

(i) The volume of averaged reformulated gasoline or RBOB in gallons;

(ii) The compliance value for toxics emissions performance; and

(iii) The actual value for toxics emissions performance.

(f) [Reserved]

(g) *NO_X emissions performance averaging reports.* (1) Any refiner or importer that produced or imported any reformulated gasoline or RBOB that was to meet the NO_X emissions performance standard on average (''averaged reformulated gasoline'') shall submit to the Administrator, with the fourth quarterly report, a report for each refinery or importer for such averaged reformulated gasoline that was produced or imported during the previous NO_X averaging period.

(2) The following information shall be reported:

(i) The volume of averaged reformulated gasoline or RBOB in gallons;

(ii) The compliance value for NO_X emissions performance; and

(iii) The actual value for NO_X emissions performance.

(3) The information required by paragraph (g)(2) of this section shall be reported separately for the following categories:

(i) Gasoline and RBOB which is designated as VOC-controlled; and

(ii) Gasoline and RBOB which is not designated as VOC-controlled.

(h) *Credit transfer reports.* As an additional part of the fourth quarterly report required by this section, any refiner or importer shall, for each refinery or importer, supply the following information for any benzene credits that are transferred from or to another refinery or importer:

(1) The names, EPA-assigned registration numbers and facility identification numbers of the transferor and transferee of the credits;

(2) The number(s) of credits that were transferred; and

(3) The date(s) of the transaction(s).

(i) *Covered areas of gasoline use report.* Any refiner that produced any reformulated gasoline that was to meet any reformulated gasoline standard on average (''averaged reformulated gasoline'') shall, for each refinery at which such averaged reformulated gasoline was produced submit to the Administrator, with the fourth quarterly report, a report that contains the identity of each covered area that was supplied with any averaged reformulated gasoline produced at each refinery during the previous year.

(j) *Additional reporting requirements for certain importers.* In the case of any importer to whom different standards apply for gasoline imported at different facilities by operation of § 80.41(q)(2), such importer shall submit separate reports for gasoline imported into facilities subject to different standards.

(k) *Reporting requirements for early use of the complex model.* Any refiner for any refinery, or any importer, that elects to be subject to complex model standards under § 80.41(i)(1) shall report such election in writing to the Administrator no later than sixty days prior to the beginning of the calendar year during which such standards would apply. This report shall include the refinery's or importer's baseline values for VOC, NO_X, and toxics emissions performance, in milligrams per mile.

(l) *Reports for per-gallon compliance gasoline.* In the case of reformulated gasoline or RBOB for which compliance with each of the standards set forth in § 80.41 is achieved on a per-gallon basis, the refiner or importer shall submit to the Administrator, by the last day of February of each year beginning in 1996, a report of the volume of each designated reformulated gasoline or RBOB produced or imported during the previous calendar year for which compliance is achieved on a per-gallon basis, and a statement that each gallon of this reformulated gasoline or RBOB met the applicable standards.

(m) *Reports of compliance audits.* Any refiner or importer shall cause to be submitted to the Administrator, by May 31 of each year, the report of the compliance audit required by § 80.65(h).

(n) *Report submission.* The reports required by this section shall be:

(1) Submitted on forms and following procedures specified by the Administrator; and

(2) Signed and certified as correct by the owner or a responsible corporate officer of the refiner or importer.

(o) *Additional reporting requirements for refiners that blend butane with reformulated gasoline or RBOB.* For refiners that blend any butane with reformulated gasoline or RBOB under § 80.82, the refiner shall submit to the Administrator, by the last day of February of each year, a report for the refinery which includes the following information for the previous calendar year:

(1) The total volume of butane blended with reformulated gasoline or RBOB at the refinery, separately for reformulated gasoline and RBOB;

(2) The total volume of reformulated gasoline or RBOB produced using butane, separately for reformulated gasoline and RBOB;

(3) A statement that each gallon of reformulated gasoline or RBOB produced using butane met the applicable per-gallon standards under § 80.41;

(4) A statement that all butane blended with reformulated gasoline or RBOB at the refinery is included in the

volume reported in paragraph (o)(2) of this section;

[59 FR 7813, Feb. 16, 1994, as amended at 59 FR 36964, July 20, 1994; 60 FR 65574, Dec. 20, 1995; 62 FR 60135, Nov. 6, 1997; 66 FR 67106, Dec. 28, 2001; 71 FR 74569, Dec. 15, 2005; 71 FR 26700, May 8, 2006]

§ 80.76 Registration of refiners, importers or oxygenate blenders.

(a) Registration with the Administrator of EPA is required for any refiner and importer that produces or imports any reformulated gasoline or RBOB, and any oxygenate blender that blends oxygenate into RBOB.

(b) Any person required to register shall do so by November 1, 1994, or not later than three months in advance of the first date that such person will produce or import reformulated gasoline or RBOB or conventional gasoline, whichever is later.

(c) Registration shall be on forms prescribed by the Administrator, and shall include the following information:

(1) The name, business address, contact name, and telephone number of the refiner, importer, or oxygenate blender;

(2) For each separate refinery and oxygenate blending facility, the facility name, physical location, contact name, telephone number, and type of facility; and

(3) For each separate refinery and oxygenate blending facility, and for each importer's operations in a single PADD:

(i) Whether records are kept on-site or off-site of the refinery or oxygenate blending facility, or in the case of importers, the registered address;

(ii) If records are kept off-site, the primary off-site storage facility name, physical location, contact name, and telephone number; and

(iii) The name, address, contact name and telephone number of the independent laboratory used to meet the independent analysis requirements of § 80.65(f).

(d) EPA will supply a registration number to each refiner, importer, and oxygenate blender, and a facility registration number for each refinery and oxygenate blending facility that is identified, which shall be used in all reports to the Administrator.

(e)(1) Any refiner, importer, or oxygenate blender shall submit updated registration information to the Administrator within thirty days of any occasion when the registration information previously supplied becomes incomplete or inaccurate; except that

(2) EPA must be notified in writing of any change in designated independent laboratory at least thirty days in advance of such change.

[59 FR 7813, Feb. 16, 1994, as amended at 59 FR 36965, July 20, 1994; 71 FR 74570, Dec. 15, 2005; 71 FR 26701, May 8, 2006]

§ 80.77 Product transfer documentation.

On each occasion when any person transfers custody or title to any reformulated gasoline or RBOB, other than when gasoline is sold or dispensed for use in motor vehicles at a retail outlet or wholesale purchaser-consumer facility, the transferor shall provide to the transferee documents which include the following information:

(a) The name and address of the transferor;

(b) The name and address of the transferee;

(c) The volume of gasoline or RBOB which is being transferred;

(d) The location of the gasoline at the time of the transfer;

(e) The date of the transfer;

(f) The proper identification of the product as reformulated gasoline or RBOB;

(g) In the case of reformulated gasoline or RBOB:

(1) The proper identification as:

(i)(A) VOC-controlled for VOC-Control Region 1; or VOC-controlled for VOC-Control Region 2; or Not VOC-controlled; or

(B) In the case of gasoline or RBOB that is VOC-controlled for VOC-Control Region 1, the gasoline may be identified as suitable for use either in VOC-Control Region 1 or VOC-Control Region 2;

(ii) [Reserved]

(iii) Prior to January 1, 1998, certified under the simple model standards or certified under the complex model standards; and

(2) The minimum and/or maximum standards with which the gasoline or RBOB conforms for:

(i) Benzene content;

(ii) [Reserved]

(iii) In the case of VOC-controlled gasoline subject to the simple model standards, RVP;

(iv) In the case of gasoline subject to the complex model standards:

(A) Prior to January 1, 1998, the NOx emissions performance minimum, and for VOC-controlled gasoline the VOC emissions performance minimum, in milligrams per mile; and

(B) Beginning on January 1, 1998, for VOC-controlled gasoline, the VOC emissions performance minimum.

(3) Identification of VOC-controlled reformulated gasoline or RBOB as gasoline or RBOB which contains ethanol, or which does not contain any ethanol; and

(4) For transfers of custody of gasoline subject to the provisions of § 80.69(a)(11), the information required to be included on product transfer documents under § 80.69(a)(11)(vii)(A).

(h) Prior to January 1, 1998, in the case of reformulated gasoline or RBOB subject to the complex model standards:

(1) The name and EPA registration number of the refinery at which the gasoline was produced, or importer that imported the gasoline; and

(2) Instructions that the gasoline or RBOB may not be combined with any other gasoline or RBOB that was produced at any other refinery or was imported by any other importer;

(i) In the case of RBOB:

(1) The designation of the RBOB as suitable for blending with:

(i) Any-oxygenate;

(ii) Ether-only; or

(iii) Other specified oxygenate type(s) and amount(s);

(2) The oxygenate type(s) and amount(s) that are intended for blending with the RBOB;

(3) Instructions that the RBOB may not be combined with any other RBOB except other RBOB having the same requirements for oxygenate type(s) and amount(s), or, prior to blending, with reformulated gasoline.

[59 FR 7813, Feb. 16, 1994, as amended at 59 FR 36965, July 20, 1994; 62 FR 60136, Nov. 6, 1997; 62 FR 68207, Dec. 31, 1997; 71 FR 74570, Dec. 15, 2005; 71 FR 26701, May 8, 2006; 71 FR 31961, June 2, 2006]

§ 80.78 Controls and prohibitions on reformulated gasoline.

(a) *Prohibited activities.* (1) No person may manufacture and sell or distribute, offer for sale or distribution, dispense, supply, offer for supply, store, transport, or cause the transportation of any gasoline represented as reformulated and intended for sale or use in any covered area:

(i) Unless each gallon of such gasoline meets the applicable benzene maximum standard specified in § 80.41;

(ii)–(iii) [Reserved]

(iv) Unless the product transfer documentation for such gasoline complies with the requirements in § 80.77; and

(v) During the period May 1 through September 15 for all persons except retailers and wholesale purchaser-consumers, and during the period June 1 through September 15 for all persons including retailers and wholesale purchaser-consumers:

(A) Unless each gallon of such gasoline is VOC-controlled for the proper VOC Control Region, except that gasoline designated for VOC-Control Region 1 may be used in VOC-Control Region 2;

(B) Unless each gallon of such gasoline that is subject to simple model standards has an RVP which is less than or equal to the applicable RVP maximum specified in § 80.41;

(C) Unless each gallon of such gasoline that is subject to complex model standards has a VOC emissions reduction percentage which is greater than or equal to the applicable minimum specified in § 80.41.

(2) No refiner or importer may produce or import any gasoline represented as reformulated or RBOB, and intended for sale or use in any covered area:

(i) Unless such gasoline meets the definition of reformulated gasoline or RBOB; and

(ii) Unless the properties of such gasoline or RBOB correspond to the product transfer documents.

(3) [Reserved]

(4) Gasoline shall be presumed to be intended for sale or use in a covered area unless:

(i) Product transfer documentation as described in § 80.77 accompanying such gasoline clearly indicates the gasoline is intended for sale and use only outside any covered area; or

(ii) The gasoline is contained in the storage tank of a retailer or wholesale purchaser-consumer outside any covered area.

(5) No person may combine any reformulated gasoline with any conventional gasoline or blendstock, except that a refiner may do so at a refinery under the requirements specified in § 80.65(i), or if the combined product is designated as conventional gasoline.

(6) No person may add any oxygenate to reformulated gasoline, except that such oxygenate may be added to reformulated gasoline provided that such gasoline is used in an oxygenated fuels program control area during an oxygenated fuels control period.

(7) No person may combine any reformulated gasoline blendstock for oxygenate blending with any other gasoline, blendstock, or oxygenate except:

(i) Oxygenate of the type and amount (or within the range of amounts) specified by the refiner or importer at the time the RBOB was produced or imported;

(ii) Other RBOB for which the same oxygenate type and amount (or range of amounts) was specified by the refiner or importer; or

(iii) Under the terms of paragraph (a)(5) of this section.

(8)(i) No person may combine any ethanol-blended VOC-controlled reformulated gasoline with any non-ethanol-blended VOC-controlled reformulated gasoline during the period January 1 through September 15, except that:

(ii) Notwithstanding the prohibition in paragraph (a)(8)(i), retailers and wholesale purchaser-consumers may combine at a retail outlet or wholesale purchaser-consumer facility ethanol-blended VOC-controlled reformulated gasoline with non-ethanol-blended VOC-controlled reformulated gasoline, provided that the retailer or wholesale purchaser-consumer:

(A) Combines only batches of reformulated gasoline that have been certified under this subpart;

(B) Notifies EPA prior to combining the gasolines and identifies the exact location of the retail outlet or wholesale purchase-consumer facility and the specific tank in which the gasolines will be combined;

(C) Retains and, upon request by EPA, makes available for inspection product transfer documentation accounting for all gasoline at the retail outlet or wholesale purchaser-consumer facility; and

(D) Does not combine any VOC-controlled gasoline with any non-VOC controlled gasoline between June 1 and September 15 of each calendar year;

(iii) A retailer or wholesale purchaser-consumer may combine ethanol-blended reformulated gasoline with non-ethanol-blended reformulated gasoline under paragraph (a)(8)(ii) of this section a maximum of two periods between May 1 and September 15 of each calendar year, each such period to extend for a period of no more than ten consecutive calendar days. At the end of the ten-day period, the gasoline must be in compliance with the VOC minimum standard under § 80.41.

(A) The retailer or wholesale purchaser-consumer may demonstrate compliance with the VOC minimum standard by testing the gasoline at the end of the ten-day period using the test methods in § 80.46, where the test results show that the gasoline meets the VOC minimum standard. Under this option, the retailer or wholesale purchaser-consumer may add both ethanol-blended reformulated gasoline and non-ethanol-blended reformulated gasoline to the same tank an unlimited number of times during the ten-day period; or

(B) The retailer or wholesale purchaser-consumer will be deemed in compliance with the VOC minimum standard where the retailer or wholesale purchaser-consumer draws the tank down as low as practicable before receiving product of the other type into the tank and receives only product of the other type into the tank during the ten-day period. Under this option, the retailer or wholesale purchaser-consumer is not required to test the

gasoline at the end of the ten-day period.

(iv) Nothing in paragraphs (a)(8)(ii) or (iii) of this section shall preempt existing State laws or regulations regulating the combining of ethanol-blended reformulated gasoline with non-ethanol-blended reformulated gasoline or prohibit a State from adopting such laws or regulations in the future.

(9) Prior to January 1, 1998:

(i) No person may combine any reformulated gasoline or RBOB that is subject to the simple model standards with any reformulated gasoline or RBOB that is subject to the complex model standards, except that such gasolines may be combined at a retail outlet or wholesale purchaser-consumer facility;

(ii) No person may combine any reformulated gasoline subject to the complex model standards that is produced at any refinery or is imported by any importer with any other reformulated gasoline that is produced at a different refinery or is imported by a different importer, unless the other refinery or importer has an identical baseline for meeting complex model standards during this period; and

(iii) No person may combine any RBOB subject to the complex model standards that is produced at any refinery or is imported by any importer with any RBOB that is produced at a different refinery or is imported by a different importer, unless the other refinery or importer has an identical baseline for meeting complex model standards during this period.

(10) The prohibitions against combining certain categories of gasoline under paragraphs (a)(5), (a)(7) and (a)(8) of this section do not apply in the case of a party who is changing the type of gasoline stored in a gasoline storage tank or the type of gasoline transported through a gasoline pipe or manifold within a single facility (a gasoline storage tank, pipe, or manifold change of service), or in the case of a change of service that involves mixing gasoline with blendstock, provided that:

(i) The change of service is for a legitimate operational reason and is not for the purpose of combining the categories of gasoline or of combining gasoline with blendstock;

(ii) Prior to adding product of the new category the volume of product of the old category in the tank, pipe or manifold is made as low as possible through normal pumping operations;

(iii) The volume of product of the new category that is added to the tank, pipe or manifold is as large as possible taking into account the availability of product of the new category; and

(iv) In any case where the new category of product is reformulated gasoline, subsequent to adding the gasoline of the new category, a representative sample from the tank, pipe or manifold is collected and analyzed, and such analysis shows compliance with each standard under § 80.41 that is relevant to the new gasoline category. The analysis for each standard must be conducted using the method specified under § 80.46, or using another method that is approved by the American Society of Testing and Materials (ASTM), provided that the protocols of the ASTM method are followed and the alternative method is correlated to the method specified under § 80.46.

(11) The prohibition against combining reformulated gasoline with RBOB under paragraph (a)(7) of this section does not apply in the case of a party who is changing the type of product stored in a tank from which trucks are loaded, from reformulated gasoline to RBOB, or vice versa, provided that:

(i) The change of service requirements described in paragraph (a)(10) of this section cannot be met without taking the storage tank out of service;

(ii) Prior to adding product of the new category the volume of product of the old category in the tank is drawn down to the lowest point which allows trucks to be loaded during the transition;

(iii) The volume of product of the new category that is added to the tank is as large as possible taking into account the availability of product of the new category;

(iv) When transitioning from RBOB to reformulated gasoline, the reformulated gasoline must meet all applicable standards that apply at the terminal subsequent to any oxygenate blending;

(v) When transitioning from reformulated gasoline to RBOB:

(A) The oxygen content of the reformulated gasoline produced using the RBOB must be not less than the minimum oxygen amount specified in the RBOB product transfer documents;

(B) Subsequent to any oxygenate blending, the reformulated gasoline produced using the RBOB must meet all applicable standards that apply at the terminal; and

(C) The transition from reformulated gasoline to RBOB may not begin until the date the VOC-control standards no longer apply to the terminal; and

(vi) The party must demonstrate compliance with the requirements specified in paragraphs (a)(11)(iv) and (v) of this section through testing of samples collected from the terminal storage tank and from trucks loaded at the terminal subsequent to each receipt of new product until the transition is complete. The analyses must be conducted using the test method specified under § 80.46, or using another test method that is approved by the American Society of Testing and Materials (ASTM), provided that the protocols of the ASTM method are followed and the alternative method is correlated with the method specified under § 80.46.

(12)(i) The prohibited activities specified in paragraph (a)(1) of this section do not apply in the case of gasoline that is used to fuel aircraft, or racing motor vehicles or racing boats that are used only in sanctioned racing events, provided that product transfer documents associated with such gasoline, and any pump stand from which such gasoline is dispensed, identify the gasoline either as conventional gasoline that is restricted for use in aircraft, or as conventional gasoline that is restricted for use in racing motor vehicles or racing boats that are used only in sanctioned racing events.

(ii) A vehicle shall be considered to be a racing vehicle only if the vehicle:

(A) Is operated in conjunction with sanctioned racing events;

(B) Exhibits racing features and modifications such that it is incapable of safe and practical street or highway use;

(C) Is not licensed, and is not licensable, by any state for operation on public streets or highways;

(D) Is not operated on public streets or highways; and

(E) Could not be converted to public street or highway use at a cost that is reasonable compared to the value of the vehicle.

(b) *Liability*. Liability for violations of paragraph (a) of this section shall be determined according to the provisions of § 80.79.

(c) *Determination of compliance*. Compliance with the standards listed in paragraph (a) of this section shall be determined by use of one of the testing methodologies specified in § 80.46, except that where test results using the testing methodologies specified in § 80.46 are not available or where such test results are available but are in question, EPA may establish noncompliance with standards using any information, including the results of testing using methods that are not included in § 80.46.

(d) *Dates controls and prohibitions begin*. The controls and prohibitions specified in paragraph (a) of this section apply at any location other than retail outlets and wholesale purchaser-consumer facilities on or after December 1, 1994, at any location on or after January 1, 1995.

[59 FR 7813, Feb. 16, 1994, as amended at 59 FR 36965, July 20, 1994; 62 FR 60136, Nov. 6, 1997; 62 FR 68207, Dec. 31, 1997; 66 FR 67106, Dec. 28, 2001; 71 FR 74570, Dec. 15, 2005; 71 FR 8972, 8985, Feb. 22, 2006; 71 FR 26420, May 5, 2006; 71 FR 26701, May 8, 2006]

§ 80.79 Liability for violations of the prohibited activities.

(a) *Persons liable*. Where the gasoline contained in any storage tank at any facility owned, leased, operated, controlled or supervised by any refiner, importer, oxygenate blender, carrier, distributor, reseller, retailer, or wholesale purchaser-consumer is found in violation of the prohibitions described in § 80.78(a), the following persons shall be deemed in violation:

(1) Each refiner, importer, oxygenate blender, carrier, distributor, reseller, retailer, or wholesale purchaser-consumer who owns, leases, operates, controls or supervises the facility where the violation is found;

(2) Each refiner or importer whose corporate, trade, or brand name, or

whose marketing subsidiary's corporate, trade, or brand name, appears at the facility where the violation is found;

(3) Each refiner, importer, oxygenate blender, distributor, and reseller who manufactured, imported, sold, offered for sale, dispensed, supplied, offered for supply, stored, transported, or caused the transportation of any gasoline which is in the storage tank containing gasoline found to be in violation; and

(4) Each carrier who dispensed, supplied, stored, or transported any gasoline which is in the storage tank containing gasoline found to be in violation, provided that EPA demonstrates, by reasonably specific showings by direct or circumstantial evidence, that the carrier caused the violation.

(5) Notwithstanding the provisions in paragraphs (a)(1) through (a)(4) of this section: (i) Only a retailer or wholesale purchaser-consumer shall be deemed in violation for combining gasolines in a manner that is inconsistent with § 80.78(a)(8)(ii) or (iii), or for gasoline which does not comply with the VOC minimum standard under § 80.41 after the retailer or wholesale purchaser-consumer combines or causes the combining of compliant gasolines in a manner inconsistent with § 80.78(a)(8)(ii) or (iii);

(ii) No person shall be deemed in violation for gasoline which does not comply with the VOC minimum standard under § 80.41 where the non-compliance is solely due to the combining of compliant gasolines by a retailer or wholesale purchaser-consumer in a manner that is consistent with § 80.78(a)(8)(ii) and (iii).

(b) *Defenses for prohibited activities.* (1) In any case in which a refiner, importer, oxygenate blender, carrier, distributor, reseller, retailer, or wholesale purchaser-consumer would be in violation under paragraph (a) of this section, it shall be deemed not in violation if it can demonstrate:

(i) That the violation was not caused by the regulated party or its employee or agent;

(ii) That product transfer documents account for all of the gasoline in the storage tank found in violation and indicate that the gasoline met relevant requirements; and

(iii)(A) That it has conducted a quality assurance sampling and testing program, as described in paragraph (c) of this section; except that

(B) A carrier may rely on the quality assurance program carried out by another party, including the party that owns the gasoline in question, provided that the quality assurance program is carried out properly.

(2)(i) Where a violation is found at a facility which is operating under the corporate, trade or brand name of a refiner, that refiner must show, in addition to the defense elements required by paragraph (b)(1) of this section, that the violation was caused by:

(A) An act in violation of law (other than the Act or this part), or an act of sabotage or vandalism;

(B) The action of any reseller, distributor, oxygenate blender, carrier, or a retailer or wholesale purchaser- consumer supplied by any of these persons, in violation of a contractual undertaking imposed by the refiner designed to prevent such action, and despite periodic sampling and testing by the refiner to ensure compliance with such contractual obligation; or

(C) The action of any carrier or other distributor not subject to a contract with the refiner but engaged by the refiner for transportation of gasoline, despite specification or inspection of procedures and equipment by the refiner which are reasonably calculated to prevent such action.

(ii) In this paragraph (b), to show that the violation ''was caused'' by any of the specified actions the party must demonstrate by reasonably specific showings, by direct or circumstantial evidence, that the violation was caused or must have been caused by another.

(c) *Quality assurance program.* In order to demonstrate an acceptable quality assurance program for reformulated gasoline at all points in the gasoline distribution network, other than at retail outlets and wholesale purchaser-consumer facilities, a party must present evidence of the following.

(1) Of a periodic sampling and testing program to determine if the applicable maximum and/or minimum standards for oxygen, benzene, RVP, or VOC emission performance are met. For gasoline subject to the provisions in

§ 80.81, a party is not required to conduct periodic sampling and testing to determine compliance with the oxygen minimum standard.

(2) That on each occasion when gasoline is found in noncompliance with one of the requirements referred to in paragraph (c)(1) of this section:

(i) The party immediately ceases selling, offering for sale, dispensing, supplying, offering for supply, storing, transporting, or causing the transportation of the violating product; and

(ii) The party promptly remedies the violation (such as by removing the violating product or adding more complying product until the applicable standards are achieved).

(3) An oversight program conducted by a carrier under paragraph (c)(1) of this section need not include periodic sampling and testing of gasoline in a tank truck operated by a common carrier, but in lieu of such tank truck sampling and testing the common carrier shall demonstrate evidence of an oversight program for monitoring compliance with the requirements of § 80.78 relating to the transport or storage of gasoline by tank truck, such as appropriate guidance to drivers on compliance with applicable requirements and the periodic review of records normally received in the ordinary course of business concerning gasoline quality and delivery.

[38 FR 1255, Jan. 10, 1973, as amended at 62 FR 68207, Dec. 31, 1997; 71 FR 8973, 8985, Feb. 22, 2006; 71 FR 26420, May 5, 2006; 71 FR 26701, May 8, 2006; 71 FR 27533, May 11, 2006]

§ 80.80 Penalties.

(a) Any person that violates any requirement or prohibition of subpart D, E, or F of this part shall be liable to the United States for a civil penalty of not more than the sum of $25,000 for every day of each such violation and the amount of economic benefit or savings resulting from each such violation.

(b) Any violation of a standard for average compliance during any averaging period, or for per-gallon compliance for any batch of gasoline, shall constitute a separate violation for each and every standard that is violated.

(c) Any violation of any standard based upon a multi-day averaging period shall constitute a separate day of violation for each and every day in the averaging period. Any violation of any credit creation or credit transfer requirement shall constitute a separate day of violation for each and every day in the averaging period.

(d)(1)(i) Any violation of any per- gallon standard or of any per-gallon minimum or per-gallon maximum, other than the standards specified in paragraph (e) of this section, shall constitute a separate day of violation for each and every day such gasoline giving rise to such violations remains any place in the gasoline distribution system, beginning on the day that the gasoline that violates such per-gallon standard is produced or imported and distributed and/or offered for sale, and ending on the last day that any such gasoline is offered for sale or is dispensed to any ultimate consumer for use in any motor vehicle; unless

(ii) The violation is corrected by altering the properties and characteristics of the gasoline giving rise to the violations and any mixture of gasolines that contains any of the gasoline giving rise to the violations such that the said gasoline or mixture of gasolines has the properties and characteristics that would have existed if the gasoline giving rise to the violations had been produced or imported in compliance with all per-gallon standards.

(2) For the purposes of this paragraph (d), the length of time the gasoline in question remained in the gasoline distribution system shall be deemed to be twenty-five days; unless the respective party or EPA demonstrates by reasonably specific showings, by direct or circumstantial evidence, that the gasoline giving rise to the violations remained any place in the gasoline distribution system for fewer than or more than twenty-five days.

(e)(1) Any reformulated gasoline that is produced or imported and offered for sale and for which the requirements to determine the properties and characteristics under § 80.65(f) is not met, or any conventional gasoline for which the refiner or importer does not sample and test to determine the relevant properties, shall be deemed:

(i)(A) Except as provided in paragraph (e)(1)(i)(B) of this section to have the following properties:

Sulfur content—970 ppm
Benzene content—5 vol %
RVP (summer)—11 psi
50% distillation—250 °F
90% distillation—375 °F
Oxygen content—0 wt %
Aromatics content—50 vol %
Olefins content—26 vol %

(B) To have the following properties in paragraph (e)(1)(i)(A) of this section unless the respective party or EPA demonstrates by reasonably specific showings, by direct or circumstantial evidence, different properties for the gasoline giving rise to the violations; and

(ii) In the case of reformulated gasoline, to have been designated as meeting all applicable standards on a per-gallon basis.

(2) For the purposes of paragraph (e)(1) of this section, any refiner or importer that fails to meet the independent analysis requirements of § 80.65(f) may not use the results of sampling and testing that is carried out by that refiner or importer as direct or circumstantial evidence of the properties of the gasoline giving rise to the violations, unless this failure was not caused by the refiner or importer.

(f) Any violation of any affirmative requirement or prohibition not included in paragraph (c) or (d) of this section shall constitute a separate day of violation for each and every day such affirmative requirement is not properly accomplished, and/or for each and every day the prohibited activity continues. For those violations that may be ongoing under subparts D, E, and F of this part, each and every day the prohibited activity continues shall constitute a separate day of violation.

§ 80.81 Enforcement exemptions for California gasoline.

(a)(1) The requirements of subparts D, E, F, and J of this part are modified in accordance with the provisions contained in this section in the case of California gasoline.

(2) For purposes of this section, ''California gasoline'' means any gasoline that is sold, intended for sale, or made available for sale as a motor vehicle fuel in the State of California and that:

(i) Is manufactured within the State of California;

(ii) Is imported into the State of California from outside the United States; or

(iii) Is imported into the State of California from inside the United States and that is manufactured at a refinery that does not produce reformulated gasoline for sale in any covered area outside the State of California.

(b)(1) Any refiner or importer of gasoline that is sold, intended for sale, or made available for sale as a motor fuel in the State of California is, with regard to such gasoline, exempt from the compliance survey provisions contained in § 80.68.

(2) Any refiner or importer of California gasoline is, with regard to such gasoline, exempt from the independent analysis requirements contained in § 80.65(f).

(3) Any refiner, importer, or oxygenate blender of California gasoline that elects to meet any benzene content, oxygen content, or toxics emission reduction standard specified in § 80.41 on average for any averaging period specified in § 80.67 that is in part before March 1, 1996, and in part subsequent to such date, shall, with regard to such gasoline that is produced or imported prior to such date, demonstrate compliance with each of the standards specified in § 80.41 for each of the following averaging periods in lieu of those specified in § 80.67:

(i) January 1 through December 31, 1995; and

(ii) March 1, 1995, through February 29, 1996.

(4) The compliance demonstration required by paragraph (b)(3)(ii) of this section shall be submitted no later than May 31, 1996, along with the report for the first quarter of 1996 required to be submitted under § 80.75(a)(1)(i).

(c) Any refiner, importer, or oxygenate blender of California gasoline that is manufactured or imported subsequent to March 1, 1996 and that meets the requirements of the California Phase 2 or Phase 3 reformulated gasoline regulations, as set forth in Title

13, California Code of Regulations, section 2250 *et seq.* (May 1, 2003), is with regard to such gasoline, exempt from the following requirements (in addition to the requirements specified in paragraph (b) of this section:

(1) The parameter value reconciliation requirements contained in § 80.65(e)(2);

(2) The designation of gasoline requirements contained in § 80.65(d), except in the case of RBOB that is designated as ''any renewable oxygenate,'' ''non-VOC controlled renewable ether only'', or ''renewable ether only'';

(3) The reformulated gasoline and RBOB compliance requirements contained in § 80.65(c);

(4) [Reserved]

(5) The annual compliance audit requirements contained in § 80.65(h), except where such audits are required with regard to the renewable oxygenate requirements contained in § 80.83;

(6) The downstream oxygenate blending requirements contained in § 80.69, except where such requirements apply to the renewable oxygenate requirements contained in § 80.83;

(7) The record keeping requirements contained in §§ 80.74 and 80.104, except that records required to be maintained under Title 13, California Code of Regulations, section 2270, shall be maintained for a period of five years from the date of creation and shall be delivered to the Administrator or to the Administrator's authorized representative upon request;

(8) The reporting requirements contained in §§ 80.75 and 80.105;

(9) The product transfer documentation requirements contained in § 80.77; and

(10) The compliance attest engagement requirements contained in subpart F of this part, except where such requirements apply to the renewable oxygenate requirements contained in § 80.83.

(d) Any refiner or importer that produces or imports gasoline that is sold, intended for sale, or made available for sale as a motor vehicle fuel in the State of California subsequent to March 1, 1996, shall demonstrate compliance with the standards specified in §§ 80.41 and 80.90 by excluding the volume and properties of such gasoline from all conventional gasoline and reformulated gasoline that it produces or imports that is not sold, intended for sale, or made available for sale as a motor vehicle fuel in the State of California subsequent to such date. The exemption provided in this section does not exempt any refiner or importer from demonstrating compliance with such standards for all gasoline that it produces or imports.

(e)(1) The exemption provisions contained in paragraphs (b)(2), (b)(3), (c), and (f) of this section shall not apply under the circumstances set forth in paragraphs (e)(2) and (e)(3) of this section.

(2) [Reserved]

(3)(i) Such exemption provisions shall not apply to any refiner or importer of California gasoline who has been assessed a civil, criminal or administrative penalty for a violation of subpart D, E or F of this part or for a violation of the California Phase 2 reformulated gasoline regulations set forth in Title 13, California Code of Regulations, sections 2260 *et seq.*, effective 90 days after the date of final agency or district court adjudication of such penalty assessment.

(ii) Any refiner or importer subject to the provisions of paragraph (e)(3)(i) of this section may submit a petition to the Administrator for relief, in whole or in part, from the applicability of such provisions, for good cause. Good cause may include a showing that the violation for which a penalty was assessed was not a substantial violation of the Federal California reformulated gasoline regulations.

(f) In the case of any gasoline that is sold, intended for sale, or made available for sale as a motor vehicle fuel in the State of California subsequent to March 1, 1996, any person that manufactures, sells, offers for sale, dispenses, supplies, offers for supply, stores, transports, or causes the transportation of such gasoline is, with regard to such gasoline, exempt from the following prohibited activities provisions:

(1) The oxygenated fuels provisions contained in § 80.78(a)(1)(iii);

(2) The product transfer provisions contained in § 80.78(a)(1)(iv);

(3) The oxygenate blending provisions contained in § 80.78(a)(7); and

(4) The segregation of simple and complex model certified gasoline provision contained in § 80.78(a)(9).

(g)(1) Any refiner that operates a refinery located outside the State of California at which California gasoline is produced (as defined in paragraph (a)(2)(ii) or (iii) of this section) is produced shall, with regard to such gasoline, provide to any person to whom custody or title of such gasoline has transferred, and each transferee shall provide to any subsequent transferee, documents which include the following information:

(i) The name and address of the transferor;

(ii) The name and address of the transferee;

(iii) The volume of gasoline which is being transferred;

(iv) The location of the gasoline at the time of the transfer;

(v) The date and time of the transfer;

(vi) The identification of the gasoline as California gasoline.

(2) Each refiner and transferee of such gasoline shall maintain copies of the product transfer documents required to be provided by paragraph (g)(1) of this section for a period of five years from the date of creation and shall deliver such documents to the Administrator or to the Administrator's authorized representative upon request.

(h)(1) For the purposes of the batch sampling and analysis requirements contained in § 80.65(e)(1) and § 80.101(i)(1)(i)(A), any refiner or importer of California gasoline may use a sampling and/or analysis methodology prescribed in Title 13, California Code of Regulations, section 2260 *et seq*. (as amended July 2, 1996), in lieu of any applicable methodology specified in § 80.46, with regards to:

(i) Such gasoline; or

(ii) That portion of its gasoline produced or imported for use in other areas of the United States, provided that:

(A) The gasoline must be produced by a refinery that is located in the state of California that produces California gasoline, or imported into California from outside the United States as California gasoline;

(B) The gasoline must be classified as conventional gasoline upon exportation from the California; and

(C) The refiner or importer must correlate the results from the applicable sampling and/or analysis methodology prescribed in Title 13, California Code of Regulations, section 2250 *et seq*. (May 1, 2003) with the method specified in § 80.46, and such correlation must be adequately demonstrated to EPA upon request.

(2) Nothwithstanding the requirements of § 80.65(e)(1) regarding when the properties of a batch of reformulated gasoline must be determined, a refiner of California gasoline may determine the properties of gasoline as specified under § 80.65(e)(1) at off site tankage provided that:

(i) The samples are properly collected under the terms of a current and valid protocol agreement between the refiner and the California Air Resources Board with regard to sampling at the off site tankage and consistent with the requirements prescribed in Title 13, California Code of Regulations, section 2250 *et seq*. (May 1, 2003); and

(ii) The refiner provides a copy of the protocol agreement to EPA upon request.

[59 FR 7813, Feb. 16, 1994, as amended at 59 FR 36965, July 20, 1994; 59 FR 39289, Aug. 2, 1994; 59 FR 60715, Nov. 28, 1994; 63 FR 34825, June 26, 1998; 64 FR 49997, Sept. 15, 1999; 66 FR 17263, Mar. 29, 2001; 70 FR 75920, Dec. 21, 2005; 70 FR 74570, Dec. 15, 2005; 71 FR 8973, Feb. 22, 2006; 71 FR 26701, May 8, 2006]

EFFECTIVE DATE NOTE: At 59 FR 39289, Aug. 2, 1994, § 80.81 was amended by revising paragraphs (c)(2), (c)(5), (c)(6), and (c)(10) effective Sept. 1, 1994. At 59 FR 60715, Nov. 28, 1994, the amendment was stayed effective Sept. 13, 1994. At 70 FR 74570, Dec. 15, 2005, § 80.81 was amended by revising paragraphs (c)(2), (c)(5), (c)(6), and (c)(10); however, the amendment could not be incorporated because those paragraphs are stayed.

§ 80.82 Butane blending.

A refiner for any refinery that produces gasoline by blending butane with conventional gasoline or reformulated gasoline or RBOB may meet the sampling and testing requirements of subparts D and E of this part as follows:

(a) Any refinery that blends butane for which the refinery has documents from the butane supplier which demonstrate that the butane is commercial grade, as defined in paragraph (c) of this section, may demonstrate compliance with the standards in subparts D and E of this part based on the properties specified in paragraph (c) of this section, or the properties specified by the butane supplier.

(b)(1) Any refiner that blends butane for which the refiner has documents from the butane supplier which demonstrate that the butane is non-commercial grade, as defined in paragraph (d) of this section, may demonstrate compliance with the standards in subparts D and E of this part based on the properties specified in paragraph (d) of this section, or the properties specified by the butane supplier, provided that the refinery:

(i) Conducts a quality assurance program of sampling and testing the butane obtained from each separate butane supplier which demonstrates that the butane has the properties specified in paragraph (d) of this section; and

(ii) The frequency of sampling and testing for the butane received from each butane supplier must be one sample for every 500,000 gallons of butane received, or one sample every three months, whichever is more frequent.

(2) Where test results indicate the butane does not meet the requirements in paragraph (b)(1) of this section, the refiner may:

(i) Blend the butane with conventional gasoline, or reformulated gasoline that has been downgraded to conventional gasoline, provided that the equivalent emissions performance of the butane batch, as determined using the provisions in § 80.101(g)(3), meets the refinery's standards under § 80.101;

(ii) Blend the butane with reformulated gasoline or RBOB, provided that the final batch of butane blended with reformulated gasoline or RBOB meets the per-gallon standards in § 80.41, as determined using the test methods in § 80.46.

(c) Commercial grade butane is defined as butane for which test results demonstrate that the butane is 95% pure and has the following properties:

olefins ≤1.0 vol%
aromatics ≤2.0 vol%
benzene ≤0.03 vol%
sulfur ≤140 ppm until December 31, 2003; ≤120 ppm in 2004; ≤30 ppm beginning January 1, 2005 and thereafter

(d) Non-commercial grade butane is defined as butane for which test results demonstrate the butane has the following properties:

olefins ≤10.0 vol%
aromatics ≤2.0 vol%
benzene ≤0.03 vol%
sulfur ≤140 ppm until December 31, 2003; ≤120 ppm in 2004; ≤30 ppm beginning January 1, 2005 and thereafter

(e)(1) When butane is blended with conventional gasoline under this section during the period May 1 through September 15, the refiner shall demonstrate through sampling and testing, using the test method for Reid vapor pressure in § 80.46, that each batch of conventional gasoline blended with butane meets the volatility standards specified in § 80.27.

(2) Butane may not be blended with any reformulated gasoline or RBOB during the period April 1 through September 30, or with any reformulated gasoline or RBOB designated as VOC-controlled, under this section.

(f) When butane is blended with conventional gasoline or reformulated gasoline or RBOB under this section, product transfer documents which accompany the gasoline blended with butane must comply with all of the requirements of § 80.77 or § 80.106, as appropriate.

(g) Butane blended with reformulated gasoline or RBOB or conventional gasoline during a period of up to one month may be included in a single batch for purposes of reporting to EPA, however, commercial grade butane and non-commercial grade butane must be reported as separate batches.

(h) Where a refiner chooses to include butane blended with gasoline in the refinery's annual average compliance calculations:

(1) In the case of butane blended with conventional gasoline, the equivalent emissions performance of the butane must be calculated in accordance with the provisions of § 80.101(g)(3). For purposes of this paragraph (i)(1), the property values in § 80.82(c) or (d), as appropriate, may be used;

(2) In the case of butane blended with reformulated gasoline or RBOB, compliance with the reformulated gasoline standards may not be demonstrated using the provisions of this section;

(3) All butane blended into gasoline during the annual averaging period must be included in annual average compliance calculations for the refinery.

[70 FR 74570, Dec. 15, 2005]

§ 80.83 Renewable oxygenate requirements.

(a) *Definition of renewable oxygenate.* For purposes of subparts D and F of this part, renewable oxygenate is defined as provided in this paragraph (a).

(1) In the case of oxygenate added to reformulated gasoline or RBOB that is not designated as VOC-controlled or that is not subject to the additional requirements associated with an extended non-commingling season pursuant to § 80.83(i), renewable oxygenate shall be:

(i) An oxygenate that is derived from non-fossil fuel feedstocks; or

(ii) An ether that is produced using an oxygenate that is derived from non-fossil fuel feedstocks.

(2) In the case of oxygenate added to reformulated gasoline or RBOB that is designated as VOC-controlled or that is subject to the additional requirements associated with an extended non-commingling season pursuant to § 80.83(i), renewable oxygenate shall be an ether that meets the requirements of paragraph (a)(1)(ii) or (a)(3) of this section.

(3) An oxygenate other than those ethers specified in paragraphs (a)(1) or (a)(2) of this section may be considered a renewable oxygenate if the Administrator approves a petition to that effect. The Administrator may approve such a petition if it is demonstrated to the satisfaction of the Administrator that the oxygenate does not cause volatility increases in gasoline that are non-linear in nature (i.e., a non-linear vapor pressure blending curve). The Administrator may approve a petition subject to any appropriate conditions or limitations.

(4)(i) Oxygenate shall be renewable only if the refiner, importer, or oxygenate blender who uses the oxygenate is able to establish in the form of documentation that the oxygenate was produced from a non-fossil fuel feedstock.

(ii)(A) Any person who produces renewable oxygenate, as defined in paragraph (a)(1) of this section, or who stores, transports, transfers, or sells such renewable oxygenate, and where such renewable oxygenate is intended to be used in the production of gasoline, shall maintain documents that state the renewable source of the oxygenate, and shall supply to any transferee of the oxygenate documents which state the oxygenate is from a renewable source.

(B) Any person who imports oxygenate that is represented by the importer to be renewable oxygenate, as defined in paragraph (a) of this section, shall maintain documents, obtained from the person who produced the oxygenate, that include a certification signed by the owner or chief executive officer of the company that produced the oxygenate that states:

(*1*) The nature of the feedstock for the oxygenate; and

(*2*) A description of the manner in which the oxygenate meets the renewable definition under paragraph (a) of this section.

(iii) No person may represent any oxygenate as renewable unless the oxygenate meets the renewable definition under paragraph (a) of this section.

(5) For purposes of this section, an oxygenate shall be considered to be derived from non-fossil fuel feedstocks only if the oxygenate is:

(i) Derived from a source other than petroleum, coal, natural gas, or peat; or

(ii) Derived from a product:

(A) That was produced using petroleum, coal, natural gas, or peat through a substantial transformation of the fossil fuel;

(B) When the product was initially produced, it was not commonly used to generate energy (e.g. automobile tires); and

(C) The product was sold or transferred for a use other than energy generation, and was later treated as a waste product.

(b) *Renewable oxygenate standard.* (1) The reformulated gasoline and reformulated gasoline produced using RBOB that is produced by any refiner at each

refinery, or is imported by any importer, shall contain a volume of renewable oxygenate such that the reformulated gasoline and reformulated gasoline produced using RBOB, on average, has an oxygen content from such renewable oxygenate that is equal to or greater than 0.30 wt% for the period of December 1, 1994 through December 31, 1995, and 0.60 wt% beginning on January 1, 1996.

(2) The averaging period for the renewable oxygenate standard specified in paragraph (b)(1) of this section shall be:

(i) Each calendar year; except that

(ii)Any reformulated gasoline and RBOB that is produced or imported prior to January 1, 1995 shall be averaged with reformulated gasoline and RBOB produced or imported during 1995.

(3)(i) The oxygenate used to meet the standard under paragraph (b)(1) of this section may also be used to meet any oxygen standard under § 80.41; except that

(ii) The renewable oxygenate added by a downstream oxygenate blender shall not be used by any refiner or importer to meet the oxygen standard under § 80.41, except through the transfer of oxygen credits.

(c) *Downstream oxygenate blending using renewable oxygenate.* (1) In the case of any refiner that produces RBOB, or any importer that imports RBOB, the oxygenate that is blended with the RBOB may be included with the refiner's or importer's compliance calculations under paragraph (d) of this section only if:

(i) The oxygenate meets the applicable renewable oxygenate definition under paragraph (a) of this section; and

(ii) The refiner or importer meets the downstream oxygenate blending oversight requirements specified in §§ 80.69(a)(6) and (7); or

(iii)(A) In the case of RBOB designated for ''any renewable oxygenate'' the refiner or importer assumes that ethanol will be blended with the RBOB;

(B) In the case of RBOB designated for ''renewable ether only'' or ''non-VOC controlled renewable ether only '', the refiner or importer assumes that ETBE will be blended with the RBOB; and

(C) In the case of ''any renewable oxygenate,'' ''non-VOC controlled renewable ether only'' and ''renewable ether only RBOB,'' the refiner or importer assumes that the volume of oxygenate added will be such that the resulting reformulated gasoline will have an oxygen content of 2.0 wt%.

(2)(i) No person may combine any oxygenate with RBOB designated as ''any renewable oxygenate'' unless the oxygenate meets the criteria specified in paragraph (a) of this section.

(ii) No person may combine any oxygenate with RBOB designated as ''renewable ether only'' or ''non-VOC controlled renewable ether only'' unless the oxygenate meets the criteria specified in paragraph (a) of this section.

(d) *Compliance calculation.* (1) Any refiner for each of its refineries, and any importer shall, for each averaging period, determine compliance with the renewable oxygenate standard by calculating:

(i) Prior to January 1, 1996, renewable oxygen compliance total using the following formula:

$$CT_{ro} = \left(\sum_{i=1}^{n} V_i \right) * 0.30$$

(ii) Beginning on January 1, 1996, the renewable oxygen compliance total using the following formula:

$$CT_{ro} = \left(\sum_{i=1}^{n} V_i \right) * 0.60$$

where

CT_{ro} = the compliance total for renewable oxygen

V_i = the volume of reformulated gasoline or RBOB batch i

n = the number of batches of reformulated gasoline and RBOB produced or imported during the averaging period

(iii) The renewable oxygen actual total using the following formula:

$$AT_{ro} = \sum_{i=1}^{n} \left(V_i * RO_i \right)$$

where

AT_{ro} = the actual total for renewable oxygen

V_i = the volume of gasoline or RBOB batch i

RO_i = the oxygen content, in wt%, in the form of renewable oxygenate of gasoline or RBOB batch i

n = the number of batches of gasoline or RBOB produced or imported during the averaging period

(iv) Compare the renewable oxygen actual total with the renewable oxygen compliance total.

(2)(i) The actual total must be equal to or greater than the compliance totals to achieve compliance, subject to the credit transfer provisions of paragraph (e) of this section.

(ii) If the renewable oxygen actual total is less than the renewable oxygen compliance total, renewable oxygen credits must be obtained from another refinery or importer in order to achieve compliance.

(iii) The total number of renewable oxygen credits required to achieve compliance is calculated by subtracting the renewable oxygen actual total from the renewable oxygen compliance total.

(iv) If the renewable oxygen actual total is greater than the renewable oxygen compliance total, renewable oxygen credits are generated.

(v) The total number of renewable oxygen credits which may be traded to a refiner for a refinery, or to another importer, is calculated by subtracting the renewable oxygen compliance total from the renewable oxygen actual total.

(e) *Credit transfers*. Compliance with the renewable oxygenate standard specified in paragraph (b)(1) of this section may be achieved through the transfer of renewable oxygen credits, provided that the credits meet the criteria specified in §§ 80.67(h)(1) (i) through (iv) and §§ 80.67(h) (2) and (3).

(f) *Recordkeeping*. Any refiner or importer, or any oxygenate blender who blends oxygenate with any RBOB designated as ''*any renewable oxygenate*,'' ''non VOC controlled renewable ether only'' or ''renewable ether only'' shall for a period of five years maintain the records specified in this paragraph (f) in a manner consistent with the requirements under § 80.74, and deliver such records to the Administrator upon request. The records shall contain the following information:

(1)(i) Documents demonstrating the renewable nature and source of the oxygenate used, consistent with the requirements of paragraph (a)(3) of this section;

(ii) The volume, type, and purity of any renewable oxygenate used; and

(iii) Product transfer documentation for all renewable oxygenate, reformulated gasoline, or RBOB for which the party is the transferor or transferee.

(2) The requirements of this paragraph (f) shall apply in addition to the recordkeeping requirements specified in § 80.74(e).

(g) *Reporting requirements*. (1) Any refiner for each refinery, or any importer, shall for each batch of reformulated gasoline and RBOB include in the quarterly reports for reformulated gasoline required by § 80.75(a) the total weight percent oxygen and the weight percent oxygen attributable to renewable oxygenate contained in the gasoline, or contained in the RBOB subsequent to oxygenate blending if allowed under paragraph (c) of this section.

(2) Any refiner for each refinery, or any importer, shall submit to the Administrator, with the fourth quarterly report required by § 80.75(a), a report for all reformulated gasoline and RBOB that was produced or imported during the previous calendar year averaging period, that includes the following information:

(i) The total volume of reformulated gasoline and RBOB;

(ii) The compliance total for renewable oxygen;

(iii) The actual total for renewable oxygen;

(iv) The number of renewable oxygen credits generated as a result of actual total renewable oxygen being greater than compliance total renewable oxygen;

(v) The number of renewable oxygen credits required as a result of actual total renewable oxygen being less than compliance total renewable oxygen;

(vi) The number of renewable oxygen credits transferred to another refinery or importer;

(vii) The number of renewable oxygen credits obtained from another refinery or importer; and

(viii) For any renewable oxygen credits that are transferred from or to another refinery or importer, for any such transfer:

(A) The names, EPA-assigned registration numbers and facility identification numbers of the transferor and transferee of the credits;

(B) The number of renewable oxygen credits that were transferred; and

(C) The date of the transaction.

(h) *Renewable oxygenate requirements for reformulated gasoline used in the State of California.* (1) Any refiner or importer of California gasoline, as defined in § 80.81, shall meet the renewable oxygenate standard specified in paragraph (a) of this section for all reformulated gasoline or RBOB used in any reformulated gasoline covered area as specified in § 80.70.

(2) Any California gasoline shall be presumed to be used in a reformulated gasoline covered area:

(i)(A) If the gasoline is produced at a refinery that is located within a reformulated gasoline covered area; or

(B) If the gasoline is transported to a facility that is located within a reformulated gasoline covered area, or to a facility from which gasoline is transported by truck into a reformulated gasoline covered area; unless

(ii) The refiner or importer is able to establish with documentation that the gasoline was used outside any reformulated gasoline covered area.

(3) Any California gasoline shall be considered to be designated as VOC-controlled (for purposes of paragraph (a)(1) of this section) if the Reid vapor pressure of the gasoline, or RBOB subsequent to oxygenate blending, is intended to meet a standard of:

(i) 7.8 psi or less in the case of gasoline intended for use before March 1, 1996; or

(ii) 7.0 psi or less in the case of gasoline intended for use on or after March 1, 1996.

(i) *Special provisions for shoulder season.* (1) The Governor of any State may petition for an extension of the non-commingling season for any or all reformulated gasoline covered areas within the State pursuant to § 80.70.

(i) Such petition must satisfy the following criteria:

(A) Evidence showing an increase in the market share and/or use of oxygenates which produce commingling-related RVP increases in the area(s) that are covered by the petition;

(B) Evidence demonstrating a pattern of exceedances for the period for which the extension is sought, including ozone monitoring data for the preceding three(3) years of the reformulated gasoline program;

(C) An analysis showing that the pattern of ozone exceedances is likely to continue even with implementation of other ozone air quality control measures and/or programs currently planned by the State; and

(D) Evidence that the responsible State agency or authority has given the public an opportunity for a public hearing and the submission of written comments with respect to the petition.

(ii) Effective data and publication of decision.

(A) If the Administrator determines that the petition meets the requirements of paragraph (i)(1)(i) of this section, to the satisfaction of the Administrator, then EPA shall publish a notice in the FEDERAL REGISTER announcing its intention to establish the non-commingling season as requested by the Governor, and specifying a tentative effective date.

(*1*) The Administrator shall provide the public with an opportunity for a hearing and the submission of written comments.

(*2*) The tentative effective date will correspond with the first day of the next complete non-commingling season beginning not less than one year after receipt of the petition.

(B) If the Administrator receives adverse comments or information demonstrating to the satisfaction of the Administrator that the criteria of paragraph (i)(1)(i) of this section have not been met, that the tentative effective date is not reasonable, or that other good reasons exist to deny the petition, then the Administrator may reject the Governor's request for an extended non-commingling season, in whole or in part, or may delay the effective date by up to two (2) additional years. Absent receipt of such adverse comments or information, EPA shall

publish a notice in the FEDERAL REGISTER announcing its approval of the petition and specifying an effective date for the extended non-commingling season.

(2) In the case of any refiner that produces RBOB, or any importer that imports RBOB, the oxygenate that is blended with the RBOB may be included with the refiner's or importer's compliance calculations under paragraph (d) of this section only if:

(i) The oxygenate meets the applicable renewable oxygenate definition under paragraph (a) of this section; and

(ii) In the case of RBOB designated for ''non VOC controlled ether only'' the refiner or importer assumes that ETBE or other oxygenate that does not exhibit volatility-related commingling effects when mixed with other gasolines and approved by the EPA Administrator under subparagraph (a)(3) of this section will be blended with the RBOB and so labels the transfer documentation.

[59 FR 39290, Aug. 2, 1994]

EFFECTIVE DATE NOTE: At 59 FR 39290, Aug. 2, 1994, § 80.83 was added effective September 1, 1994, except for paragraphs (g) and (h), which would not become effective until approval had been given by the Office of Management and Budget. At 59 FR 60715, Nov. 28, 1994, this section was stayed, effective Sept. 13, 1994. At 70 FR 74571, Dec. 15, 2005, § 80.83 was revised; however, the amendment could not be incorporated because the section is stayed.

§ 80.84 Treatment of interface and transmix.

(a) *Definitions.* For purposes of this section, the following definitions apply:

(1) *Interface* means a volume of petroleum product generated in a pipeline between two adjacent volumes of non-identical petroleum product that consists of a mixture of the two adjacent products.

(2) *Transmix* means an interface that does not meet the specifications for a fuel that can be used or sold, and that is composed solely of any combination of:

(i) Previously certified gasoline (including previously certified gasoline blendstocks that become gasoline solely upon the addition of an oxygenate);

(ii) Distillate fuel; or

(iii) Gasoline blendstocks that are suitable for use as a blendstock without further processing.

(3) *Transmix gasoline product*, or *TGP*, means the gasoline or gasoline blendstock that is produced when transmix is separated into distillate fuel and either gasoline or gasoline blendstock. Gasoline blendstock here includes blendstock that becomes gasoline solely upon the addition of an oxygenate (such as RBOB).

(4) *Transmix processing facility* means any refinery that produces TGP from transmix by distillation or other refining processes, but does not produce gasoline by processing crude oil.

(5) *Transmix processor* means any person who owns, leases, operates, controls or supervises a transmix processing facility.

(6) *Transmix blending facility* means any facility which produces gasoline by blending transmix into gasoline.

(7) *Transmix blender* means any person who owns, leases, operates, controls or supervises a transmix blending facility.

(b) *Designation of gasoline interface by pipeline operators.* (1) Gasoline interface mixtures containing the products below shall be designated by pipeline operators in the following manner:

(i) Interface mixtures of reformulated gasoline or RBOB, and conventional gasoline shall be designated as conventional gasoline;

(ii) Interface mixtures of VOC-controlled reformulated gasoline and non-VOC-controlled reformulated gasoline shall be designated as non-VOC-controlled RFG;

(iii) Interface mixtures of RBOB and reformulated gasoline shall be designated as RBOB; and

(iv) Interface mixtures of reformulated gasoline or RBOB, and blendstock shall be designated as blendstock.

(2) Regardless of gasoline product designation, all gasoline containing interface must meet all downstream standards, including but not limited to any standards and requirements that apply downstream of the refinery in this part and the Clean Air Act.

(c) *Transmix processing*—(1) *TGP sold without further mixing with blendstocks or previously certified gasoline.* (i) Where the TGP meets all standards and requirements that apply to conventional

gasoline downstream from the refinery, including but not limited to any standards and requirements in this part and the Clean Air Act, and the TGP is designated and sold as conventional gasoline, the transmix processor may exclude the TGP from compliance calculations for the transmix processing facility under this part subpart E of this part. Except as required in paragraph (c)(4) of this section, the transmix processor must either include every batch or exclude every batch of this TGP from their compliance calculations for each compliance period;

(ii) Where the TGP is sold as a blendstock, the transmix processor must exclude the TGP from compliance calculations. Pursuant to § 80.101(d)(3), however, TGP which becomes gasoline solely upon the addition of an oxygenate must be included in the compliance calculations for the transmix processing facility under subpart E of this part.

(iii) Where the TGP is designated and sold as reformulated gasoline or RBOB, the transmix processor must fulfill all requirements and standards that apply to a refiner under subpart D of this part and must include the reformulated gasoline or RBOB produced from the transmix in compliance calculations for the transmix processing facility under subpart D of this part.

(2) *TGP blended with blendstocks.* Where the transmix processor mixes the TGP with blendstock(s) to produce reformulated or conventional gasoline or RBOB, the TGP is treated as a blendstock and the transmix processor must fulfill all requirements and standards that apply to a refiner under subpart D or E of this part, as appropriate, and include the gasoline produced in compliance calculations for the transmix processing facility under subpart D or E of this part, as appropriate.

(3) *TGP blended with previously certified gasoline.* (i) Where the TGP meets all the standards and requirements that apply to conventional gasoline downstream from the refinery, including but not limited to any standards and requirements of this part and the Clean Air Act, and the transmix processor mixes the TGP with any previously certified gasoline to produce conventional gasoline, the TGP may be excluded from compliance calculations for the transmix processing facility under subpart E of this part. Except as required in paragraph (c)(4) of this section, the transmix processor must either include every batch or exclude every batch of this TGP from compliance calculations for the transmix processing facility for each compliance period.

(ii) Where the TGP does not meet all standards that apply to conventional gasoline downstream from the refinery, including but not limited to any standards and requirements of this part and the Clean Air Act, and the transmix processor mixes the TGP with any previously certified gasoline to produce conventional gasoline, the TGP is treated as a blendstock and the transmix processor must fulfill all requirements and standards for a refiner under subpart E of this part, for the TGP, and include the TGP in the compliance calculations for the transmix processing facility under subpart E of this part.

(iii) The sampling and testing required under paragraph (c)(3)(ii) of this section may be met using one of the following methods:

(A) Sample and test the TGP prior to blending with previously certified gasoline to determine the volume and properties of the TGP and include each volume of TGP blended with previously certified gasoline as a separate batch in compliance calculations for the transmix processing facility; or

(B) Determine the volume and properties of the previously certified gasoline prior to blending with the TGP and measure the volume and properties of the gasoline subsequent to blending with the TGP. Calculate the volume and properties of the TGP by subtracting the volume and properties of the previously certified gasoline from the volume and properties of the gasoline subsequent to blending, and include each volume of TGP blended with previously certified gasoline as a separate batch in compliance calculations for the transmix processing facility; or

(C) Comply with the requirements in § 80.101(g)(9).

(iv) Where the transmix processor mixes the TGP with any previously

certified gasoline to produce reformulated gasoline or RBOB, the TGP is treated as a blendstock and the transmix processor must fulfill all requirements and standards for a refiner under subpart D of this part, for the TGP, and include the TGP in the compliance calculations for the transmix processing facility under subpart D of this part, using the procedures in § 80.65(i).

(4) *Additional requirements for conventional gasoline produced with transmix containing blendstocks.* Notwithstanding paragraphs (c)(1)(i) and (c)(3)(i) of this section, if gasoline is produced at a transmix processing facility from any transmix containing gasoline blendstocks, the transmix processor must include every batch of gasoline produced from transmix in compliance calculations for the transmix processing facility under subpart E of this part for the entire compliance period.

(d) *Transmix blending.* Transmix blenders which fulfill all of the requirements in this paragraph (d) are exempt from the requirements and standards that apply to a refiner under subparts D and E of this part.

(1) Transmix may be blended into any previously certified gasoline, provided that:

(i) The endpoint of the final transmix-blended gasoline does not exceed 437 degrees Fahrenheit as measured by ASTM standard method D 86–01^{e1}, entitled ''Standard Test Method for Distillation of Petroleum Products at Atmospheric Pressure'', which is incorporated by reference. This incorporation by reference was approved by the Director of the Federal Register in accordance with 5 U.S.C. 552(a) and 1 CFR part 51. A copy may be obtained from the American Society for Testing and Materials, 100 Barr Harbor Dr., West Conshohocken, PA 19428–2959. Copies may be inspected at the Air Docket, EPA/DC, EPA West, Room B102, 1301 Constitution Ave., NW., Washington, DC, or at the National Archives and Records Administration (NARA). For information on the availability of this material at NARA, call 202–741–6030 or go to: *http://www.archives.gov/federal_register/code_of_federal_regulations/ibr_locations.html*;

(ii) The final transmix-blended gasoline meets all applicable downstream standards; and

(iii) The transmix blender complies with the requirements in §§ 80.74(b)(10), 80.104(b) and 80.213.

(2) The transmix blender must maintain and follow a written quality assurance program designed to assure that the type and amount of transmix blended into previously certified gasoline will not cause violations of the applicable standards in paragraph (d)(1) of this section. Except as set forth in paragraph (d)(3) of this section, as a part of the quality assurance program, transmix blenders shall collect samples of gasoline subsequent to blending transmix, and test the samples to ensure the end-point temperature of the final transmix-blended gasoline does not exceed 437 degrees Fahrenheit, at one of the following rates:

(i) In the case of transmix that is blended in a tank, following each occasion transmix is blended; or

(ii) In the case of transmix that is blended by a computer controlled in-line blending system, the transmix blender shall collect composite samples of gasoline subsequent to blending transmix at a rate of not less than twice each calendar month during which transmix is blended.

(3) Any transmix blender may petition EPA for approval of a quality assurance program that does not include the minimum sampling and testing requirements in paragraph (d)(2) of this section. In order to seek such an exemption, the transmix blender shall submit a petition to EPA that includes:

(i) A detailed description of the quality assurance procedures to be carried out at each location where transmix is blended into previously certified gasoline, including a description of how the transmix blender proposes to determine the ratio of transmix that can be blended with previously certified gasoline without violating any of the applicable standards in paragraph (d)(1) of this section, and a description of how the transmix blender proposes to determine that the gasoline produced by the transmix blending operation meets the applicable standards.

(ii) If the transmix is blended by a computer controlled in-line blending system, the transmix blender shall also include all of the information required by refiners under § 80.65(f)(4)(i)(A).

(iii) A letter signed by the president, chief operating or chief executive officer of the company, or his/her designee, stating that the information contained in the submission is true to the best of his/her belief must accompany any submission under this paragraph.

(iv) Transmix blenders who seek an exemption under paragraph (d)(3) of this section must comply with any request by EPA for additional information or any other requirements that EPA includes as part of the exemption. However, they may withdraw their exemption petition or approved exemption at any time, upon notice to EPA.

(v) EPA reserves the right to modify the requirements of an exemption under paragraph (d)(3) of this section, in whole or in part, at any time, if EPA determines that the transmix blender's operation does not effectively or adequately control, monitor or document the end-point temperature of the gasoline produced, or if EPA determines that any other circumstance exists which merits modification of the requirements of an exemption. If EPA finds that a transmix blender provided false or inaccurate information in any submission required for an exemption under this section, upon notification from EPA, the transmix blender's exemption will be void ab initio.

(4) In the event the test results for any sample collected pursuant to a quality assurance program indicate the gasoline does not comply with any of the applicable standards in paragraph (d)(1) of this section, the transmix blender shall:

(i) Immediately take steps to stop the sale of the gasoline that was sampled;

(ii) Take steps which are reasonably calculated to determine the cause of the noncompliance and to prevent future instances of noncompliance;

(iii) Inform EPA of the noncompliance; and

(iv) If the transmix was blended by a computer controlled in-line blending system, increase the rate of sampling and testing to a rate of not less than once per week and continue the increased frequency of sampling and testing until the results of ten consecutive samples and tests indicate the gasoline complies with applicable standards, at which time the sampling and testing may be conducted at the original frequency;

(5) Any transmix blender who blends transmix into previously certified gasoline and who does not meet the requirements under this paragraph (d) shall meet all requirements and standards that apply to a refiner under subparts D and E of this part, other than this section and §§ 80.74(b)(10), and 80.104(b).

(e) The provisions of paragraphs (c) and (d) of this section also apply to mixtures of gasoline and distillate fuel:

(1) Produced by unintentionally combining gasoline and distillate fuel in a tank.

(2) Produced from normal business operations at terminals or pipelines, such as gasoline or distillate fuel drained from a tank, or drained from piping or hoses used to transfer gasoline or distillate fuel to tanks or trucks, or gasoline or distillate fuel discharged from a safety relief valve.

(f) Any transmix processor or transmix blender who adds a feedstock to their transmix other than gasoline, distillate fuel or gasoline blendstocks from pipeline interface must meet all requirements and standards that apply to a refiner under subparts D and E of this part, other than this section and §§ 80.74(b)(10), and 80.104(b), for all gasoline they produce during a compliance period.

[71 FR 31961, June 2, 2006]

§§ 80.85–80.89 [Reserved]

Subpart E—Anti-Dumping

SOURCE: 59 FR 7860, Feb. 16, 1994, unless otherwise noted.

§ 80.90 Conventional gasoline baseline emissions determination.

(a) *Annual average baseline values.* For any facility of a refiner or importer of conventional gasoline, the annual average baseline values of the facility's exhaust benzene emissions, exhaust

toxics emissions, NO_X emissions, sulfur, olefins and T90 shall be determined using the following equation:

$$\text{BASELINE} = \frac{\text{SUMRBASE} \times \text{SUMRVOL} + \text{WNTRBASE} \times \text{WNTRVOL}}{\text{SUMRVOL} + \text{WNTRVOL}}$$

where

BASELINE = annual average baseline value of the facility,

SUMRBASE = summer baseline value of the facility,

SUMRVOL = summer baseline gasoline volume of the facility, per § 80.91,

WNTRBASE = winter baseline value of the facility,

WNTRVOL = winter baseline gasoline volume of the facility, per § 80.91.

(b) *Baseline exhaust benzene emissions—simple model.* (1) Simple model exhaust benzene emissions of conventional gasoline shall be determined using the following equation:

$$\text{EXHBEN} = (1.884 + 0.949 \times \text{BZ} + 0.113 \times (\text{AR} - \text{BZ}))$$

where

EXHBEN = exhaust benzene emissions,

BZ = fuel benzene value in terms of volume percent (per § 80.91), and

AR = fuel aromatics value in terms of volume percent (per § 80.91).

(2) The simple model annual average baseline exhaust benzene emissions for any facility of a refiner or importer of conventional gasoline shall be determined as follows:

(i) The simple model baseline exhaust benzene emissions shall be determined separately for summer and winter using the facility's oxygenated individual baseline fuel parameter values for summer and winter (per § 80.91), respectively, in the equation specified in paragraph (b)(1) of this section.

(ii) The simple model annual average baseline exhaust benzene emissions of the facility shall be determined using the emissions values determined in paragraph (b)(2)(i) of this section in the equation specified in paragraph (a) of this section.

(c) *Baseline exhaust benzene emissions—complex model.* The complex model annual average baseline exhaust benzene emissions for any facility of a refiner or importer of conventional gasoline shall be determined as follows:

(1) The summer and winter complex model baseline exhaust benzene emissions shall be determined separately using the facility's oxygenated individual baseline fuel parameter values for summer and winter (per § 80.91), respectively, in the appropriate complex model for exhaust benzene emissions described in § 80.45.

(2) The complex model annual average baseline exhaust benzene emissions of the facility shall be determined using the emissions values determined in paragraph (c)(1) of this section in the equation specified in paragraph (a) of this section.

(d) *Baseline exhaust toxics emissions.* The annual average baseline exhaust toxics emissions for any facility of a refiner or importer of conventional gasoline shall be determined as follows:

(1) The summer and winter baseline exhaust emissions of benzene, formaldehyde, acetaldehyde, 1,3-butadiene, and polycyclic organic matter shall be determined using the oxygenated individual baseline fuel parameter values for summer and winter (per § 80.91), respectively, in the appropriate complex model for each exhaust toxic (per § 80.45).

(2) The summer and winter baseline total exhaust toxics emissions shall be determined separately by summing the summer and winter baseline exhaust emissions of each toxic (per paragraph (d)(1) of this section), respectively.

(3) The annual average baseline exhaust toxics emissions of the facility shall be determined using the emissions values determined in paragraph (d)(2) of this section in the equation specified in paragraph (a) of this section.

(e) *Baseline NO_X emissions.* The annual average baseline NO_X emissions for any

facility of a refiner or importer of conventional gasoline shall be determined as follows:

(1) The summer and winter baseline NO_X emissions shall be determined using the baseline individual baseline fuel parameter values for summer and winter (per § 80.91), respectively, in the appropriate complex model for NO_X (per § 80.45).

(2) The annual average baseline NO_X emissions of the facility shall be determined using the emissions values determined in paragraph (e)(1) of this section in the equation specified in paragraph (a) of this section.

(3) The requirements specified in paragraphs (e) (1) and (2) of this section shall be determined separately using the oxygenated and nonoxygenated individual baseline fuel parameters, per § 80.91.

(f) *Applicability of Phase I and Phase II models.* The requirements of paragraphs (d) and (e) of this section shall be determined separately for the applicable Phase I and Phase II complex models specified in § 80.45.

(g) *Calculation accuracy.* Emissions values calculated per the requirements of this section shall be determined to four (4) significant figures. Sulfur, olefin and T90 values calculated per the requirements of this section shall be determined to the same number of decimal places as the corresponding value listed in § 80.91(c)(5).

[59 FR 7860, Feb. 16, 1994, as amended at 59 FR 36965, July 20, 1994]

§ 80.91 Individual baseline determination.

(a) *Baseline definition.* (1) The ''baseline'' or ''individual baseline'' of a refinery, refiner or importer, as applicable, shall consist of:

(i) An estimate of the quality, composition and volume of its 1990 gasoline, or allowable substitute, based on the requirements specified in §§ 80.91 through 80.93; and

(ii) Its baseline emissions values calculated per paragraph (f) of this section.

(2)(i) The quality and composition of the 1990 gasoline of a refinery, refiner or importer, as applicable, shall be the set of values of the following fuel parameters: benzene content; aromatic content; olefin content; sulfur content; distillation temperature at 50 and 90 percent by volume evaporated; percent evaporated at 200 °F and 300 °F; oxygen content; RVP.

(ii) A refiner, per paragraph (b)(3)(i) of this section, shall also determine the API gravity of its 1990 gasoline.

(3) The methodology outlined in this section shall be followed in determining a baseline value for each fuel parameter listed in paragraph (a)(2) of this section.

(b) *Requirements for refiners, blenders and importers*—(1) *Requirements for producers of gasoline and gasoline blendstocks.* (i) A refinery engaged in the production of gasoline blendstocks from crude oil and/or crude oil derivatives, and the subsequent mixing of those blendstocks to form gasoline, shall have its baseline fuel parameter values determined from Method 1, 2 and/or 3-type data as described in paragraph (c) of this section, provided the refinery was in operation for at least 6 months in 1990.

(ii) A refinery which was in operation for at least 6 months in 1990, was shut down after 1990, and which restarts after June 15, 1994, and for which insufficient 1990 and post-1990 data was collected prior to January 1, 1995 from which to determine an individual baseline, shall have the values listed in paragraph (c)(5) of this section as its individual baseline parameters.

(iii) A refinery which was in operation for less than 6 months in 1990 shall have the values listed in paragraph (c)(5) of this section as its individual baseline parameters.

(2) *Requirements for producers or importers of gasoline blendstocks only.* A refiner or importer of gasoline blendstocks which did not produce or import gasoline in 1990 and which produces or imports post-1994 gasoline shall have the values listed in paragraph (c)(5) of this section as its individual baseline parameters.

(3) *Requirements for purchasers of gasoline and/or gasoline blendstocks.* (i) A refiner or refinery, as applicable, solely engaged in the production of gasoline from gasoline blendstocks and/or gasoline which are simply purchased and blended to form gasoline shall have its individual baseline determined using

Method 1-type data (per paragraph (c) of this section) from every batch of 1990 gasoline.

(ii) If Method 1-type data on every batch of the refiner's or refinery's 1990 gasoline does not exist, that refiner or refinery shall have the values listed in paragraph (c)(5) of this section as its individual baseline parameters.

(4) *Requirements for importers of gasoline and/or gasoline blendstocks.* (i) An importer of gasoline shall determine an individual baseline value for each fuel parameter listed in paragraph (a)(2) of this section using Method 1-type data on every batch of gasoline imported by that importer into the United States in 1990.

(ii) An importer which is also a foreign refiner must determine its individual baseline using Method 1, 2 and/or 3-type data (per paragraph (c) of this section) if it imported at least 75 percent, by volume, of the gasoline produced at its foreign refinery in 1990 into the United States in 1990.

(iii) An importer which cannot meet the criteria of paragraphs (b)(4)(i) or (ii) of this section for baseline determination shall have the parameter values listed in paragraph (c)(5) of this section as its individual baseline parameter values.

(5) *Requirements for exporters of gasoline and/or gasoline blendstocks.* A refiner shall not include quality or volume data on its 1990 exports of gasoline blendstocks or gasoline in its baseline determination.

(c) *Data types*—(1) *Method 1-type data.* (i) Method 1-type data shall consist of quality (composition and property data) and volume records of gasoline produced in or shipped from the refinery in 1990, excluding exported gasoline. The measured fuel parameter values and volumes of batches, or shipments if not batch blended, shall be used except that data on produced gasoline which was also shipped shall be included only once.

(ii) Gasoline blendstock which left a facility in 1990 and which could become gasoline solely upon the addition of oxygenate shall be included in the baseline determination.

(A) Fuel parameter values of such blendstock shall be accounted for as if the gasoline blendstock were blended with ten (10.0) volume percent ethanol.

(B) If the refiner or importer can provide evidence that such gasoline blendstock was not blended per paragraph (c)(1)(ii)(A) of this section, and that such gasoline blendstock was blended with another oxygenate or a different volume of ethanol, the fuel parameter values of the final gasoline (including oxygenate) shall be included in the baseline determination.

(C) If the refiner or importer can provide evidence that such gasoline blendstock was not blended per paragraph (c)(1)(ii)(A) or (B) of this section, and that such gasoline blendstock was sold with out further changes downstream, the fuel parameter values of the original product shall be included in the baseline determination.

(iii) Data on 1990 gasoline purchased or otherwise received, including intracompany transfers, shall not be included in the baseline determination of a refiner's or importer's facility if the gasoline exited the receiving refinery unchanged from its arrival state.

(2) *Method 2-type data.* Method 2-type data shall consist of 1990 gasoline blendstock quality data and 1990 blendstock production records, specifically the measured fuel parameter values and volumes of blendstock used in the production of gasoline within the refinery. Blendstock data shall include volumes purchased or otherwise received, including intracompany transfers, if the volumes were blended as part of the refiner's or importer's 1990 gasoline. Henceforth in §§ 80.91 through 80.93, ''blendstock(s)'' or ''gasoline blendstock(s)'' shall include those products or streams commercially blended to form gasoline.

(3) *Method 3-type data.* (i) Method 3-type data shall consist of post-1990 gasoline blendstock and/or gasoline quality data and 1990 blendstock and gasoline production records, specifically the measured fuel parameter values and volumes of blendstock used in the production of gasoline within the refinery. Blendstock data shall include volumes purchased or otherwise received, including intracompany transfers, if the volumes were blended as part of the refiner's or importer's 1990 gasoline.

(ii) In order to use Method 3-type data, the refiner or importer must do all of the following:

(A) Include a detailed discussion comparing its 1990 and post-1990 refinery operations and all other differences which would cause the 1990 and post-1990 fuel parameter values to differ; and

(B) Perform the appropriate calculations so as to adjust for the differences determined in paragraph (c)(3)(ii)(A) of this section; and

(C) Include a narrative, discussing the methodology and reasoning for the adjustments made per paragraph (c)(3)(ii)(B) of this section.

(iii) In order to use post-1990 gasoline data, either of the following must be shown for each blendstock-type included in 1990 gasoline, excluding butane:

(A) The post-1990 volumetric fraction of a blendstock is within (±)10.0 percent of the volumetric fraction of that blendstock in 1990 gasoline. For example, if a 1990 blendstock constituted 30 volume percent of 1990 gasoline, this criterion would be met if the post-1990 volumetric fraction of the blendstock in post-1990 gasoline was 27.0–33.0 volume percent.

(B) The post-1990 volumetric fraction of a blendstock is within (±)2.0 volume percent of the absolute value of the 1990 volumetric fraction. For example, if a 1990 blendstock constituted 5 volume percent of 1990 gasoline, this criterion would be met if the post-1990 volumetric fraction of the blendstock in post-1990 gasoline was 3–7 volume percent.

(iv) If using post-1990 gasoline data, post-1990 gasoline blendstock which left a facility and which could become gasoline solely upon the addition of oxygenate shall be included in the baseline determination, per the requirements specified in paragraph (c)(1)(ii) of this section.

(4) *Hierarchy of data use.* (i) A refiner or importer must determine a baseline fuel parameter value using only Method 1-type data if sufficient Method 1-type data is available, per paragraph (d)(1)(ii) of this section.

(ii) If a refiner has insufficient Method 1-type data for a baseline parameter value determination, it must supplement that data with all available Method 2-type data, until it has sufficient data, per paragraph (d)(1)(iii) of this section.

(iii) If a refiner has insufficient Method 1- and Method 2-type data for a baseline parameter value determination, it must supplement that data with all available Method 3-type data, until it has sufficient data, per paragraph (d)(1)(iii) of this section.

(iv) The protocol for the determination of baseline fuel parameter values in paragraphs (c)(4)(i) through (iii) of this section shall be applied to each fuel parameter one at a time.

(5) *Anti-dumping statutory baseline.* (i) The summer anti-dumping statutory baseline shall have the set of fuel parameter values identified as ''summer'' in § 80.45(b)(2). The anti-dumping summer API gravity shall be 57.4 °API.

(ii) The winter anti-dumping statutory baseline shall have the set of fuel parameter values identified as ''winter'' in § 80.45(b)(2), except that winter RVP shall be 8.7 psi. The anti-dumping winter API gravity shall be 60.2 API.

(iii) The annual average anti-dumping statutory baseline shall have the following set of fuel parameter values:

Benzene, volume percent—1.60
Aromatics, volume percent—28.6
Olefins, volume percent—10.8
RVP, psi—8.7
T50, degrees F—207
T90, degrees F—332
E200, percent—46
E300, percent—83
Sulfur, ppm—338
API Gravity, °API—59.1

(iv) The annual average anti-dumping statutory baseline shall have the following set of emission values:

Exhaust benzene emissions, simple model—6.45
Exhaust benzene emissions, complex model—33.03 mg/mile
Exhaust toxics emissions, Phase I—50.67 mg/mile
Exhaust toxics emissions, Phase II—104.5 mg/mile
NO_X emissions, Phase I—714.4 mg/mile
NO_X emissions, Phase II—1461. mg/mile

(d) *Data collection and testing requirements*—(1) *Minimum sampling requirements*—(i) *General requirements.* (A) Data shall have been obtained for at least three months of the refiner's or

importer's production of summer gasoline and at least three months of its production of winter gasoline. When method 1 per batch RVP data is available, a month is considered equivalent to 4 weeks of seasonal data.

(*1*) Method 1, per batch, actual RVP data will be used to define that batch as either summer fuel or winter fuel. Summer fuel is defined as fuel produced and intended for sale to satisfy Federal summer volatility standards. When such per batch actual RVP data is not available, data is allocated per month as follows. A summer month is defined as any month during which more than 50 percent (by volume) of the gasoline produced by a refiner met the Federal summer gasoline volatility requirements. Winter shall be any month which could not be considered a summer month under this definition.

(*2*) The three months which compose the summer and the winter data do not have to be consecutive nor within the same year.

(*3*) If, in 1990, a refiner marketed all of its gasoline only in an area or areas which experience no seasonal changes relative to gasoline requirements, e.g., Hawaii, only 3 months of data are required.

(B) Once the minimum sampling requirements have been met, data collection may cease. Additional data may only be included for the remainder of the calendar year in which the minimum sampling requirements were met. In any case, all data collected through the date of collection of the last data point included in the determination of a baseline fuel parameter value must be utilized in the baseline determination of that fuel parameter.

(C) Less than the minimum requirements specified in paragraph (d)(1) of this section may be allowed, upon petition and approval (per § 80.93), if it can be shown that the available data is sufficient in quality and quantity to use in the baseline determination.

(ii) *Method 1 sampling requirements*. At least half of the batches, or shipments if not batch blended, in a calendar month shall have been sampled over a minimum of six months in 1990.

(iii) *Method 2 sampling requirements*. (A) Continuous blendstock streams shall have been sampled at least weekly over a minimum of six months in 1990.

(B) For blendstocks produced on a batch basis, at least half of all batches of a single blendstock type produced in a calendar month shall have been sampled over a minimum of six months in 1990.

(iv) *Method 3 sampling requirements*—(A) *Blendstock data*. *(1)* Post-1990 continuous blendstock streams shall have been sampled at least weekly over a minimum of six months.

(*2*) For post-1990 blendstocks produced on a batch basis, at least half of all batches of a single blendstock type produced in a calendar month shall have been sampled over a minimum of six months.

(B) *Gasoline data*. At least half of the post-1990 batches, or shipments if not batch blended, in a calendar month shall have been sampled over a minimum of six months in order to use post-1990 gasoline data.

(2) *Sampling beyond today's date*. The necessity and actual occurrence of data collection after today's date must be shown.

(3) *Negligible quantity sampling*. Testing of a blendstock stream for a fuel parameter listed in this paragraph (d)(3) is not required if the refiner can show that the fuel parameter exists in the stream at less than or equal to the amount, on average, shown in this paragraph (d)(3) for that fuel parameter. Any fuel parameter shown to exist in a refinery stream in negligible amounts shall be assigned a value of 0.0:

Aromatics, volume percent—1.0
Benzene, volume percent—0.15
Olefins, volume percent—1.0
Oxygen, weight percent—0.2
Sulfur, ppm—30.0

(4) *Sample compositing*. (i) Samples of gasoline or blendstock which have been retained, but not analyzed, may be mixed prior to analysis and analyzed, as described in paragraphs (d)(4)(iii) (A) through (H) of this section, for the required fuel parameters. Samples must be from the same season and year and must be of a single grade or of a single type of batch-produced blendstock.

(ii) Blendstock samples of a single blendstock type obtained from continuous processes over a calendar month

may be mixed together in equal volumes to form one blendstock sample and the sample subsequently analyzed for the required fuel parameters.

(iii)(A) Samples shall have been collected and stored per the method normally employed at the refinery in order to prevent change in product composition with regard to baseline properties and to minimize loss of volatile fractions of the sample.

(B) Properties of the retained samples shall be adjusted for loss of butane by comparing the RVP measured right after blending with the RVP determined at the time that the supplemental properties are measured.

(C) The volume of each batch or shipment sampled shall have been noted and the sum of the volumes calculated to the nearest hundred (100) barrels.

(D) For each batch or shipment sampled, the ratio of its volume to the total volume determined in paragraph (d)(4)(iii)(C) of this section shall be determined to three (3) decimal places. This shall be the volumetric fraction of the shipment in the mixture.

(E) The total minimum volume required to perform duplicate analyses to obtain values of all of the required fuel parameters shall be determined.

(F) The volumetric fraction determined in paragraph (d)(4)(iii)(D) of this section for each batch or shipment shall be multiplied by the value determined in paragraph (d)(4)(iii)(E) of this section.

(G) The resulting value determined in paragraph (d)(4)(iii)(F) of this section for each batch or shipment shall be the volume of each batch or shipment's sample to be added to the mixture. This volume shall be determined to the nearest milliliter.

(H) The appropriate volumes of each shipment's sample shall be thoroughly mixed and the solution analyzed per the methods normally employed at the refinery.

(5) *Test methods.* (i) If the test methods used to obtain fuel parameter values of gasoline and gasoline blendstocks differ or are otherwise not equivalent in precision or accuracy to the corresponding test method specified in § 80.46, results obtained under those procedures will only be acceptable, upon petition and approval (per § 80.93), if the procedures are or were industry-accepted procedures for measuring the properties of gasoline and gasoline blendstocks at the time the measurement was made.

(ii) Oxygen content may have been determined analytically or from oxygenate blending records.

(A) The fuel parameter values, other than oxygen content, specified in paragraph (a) of this section, must be established as for any blendstock, per the requirements of this paragraph (d).

(B) All oxygen associated with allowable gasoline oxygenates per § 80.2(jj) shall be included in the determination of the baseline oxygen content, if oxygen content was determined analytically.

(C) Oxygen content shall be assumed to be contributed solely by the oxygenate which is indicated on the blending records, if oxygen content was determined from blending records.

(6) *Data quality.* Data may be excluded from the baseline determination if it is shown to the satisfaction of the Director of the Office of Mobile Sources, or designee, that it is not within the normal range of values expected for the gasoline or blendstock sample, considering unit configuration, operating conditions, etc.; due to:

(i) Improper labeling; or

(ii) Improper testing; or

(iii) Other reasons as verified by the auditor specified in § 80.92.

(e) *Baseline fuel parameter determination*—(1) *Closely integrated gasoline producing facilities.* Each refinery or blending facility must determine a set of baseline fuel parameter values per this paragraph (e). A single set of baseline fuel parameters may be determined, upon petition and approval, for two or more facilities under either of the following circumstances:

(i) Two or more refineries or sets of gasoline blendstock-producing units of a refiner engaged in the production of gasoline per paragraph (b)(1) of this section which are geographically proximate to each other, yet not within a single refinery gate, and whose 1990 operations were significantly interconnected.

(ii) A gasoline blending facility operating per paragraph (b)(3) of this section received at least 75 percent of its

1990 blendstock volume from a single refinery, or from one or more refineries which are part of an aggregate baseline per §80.101(h). The blending facility and associated refinery(ies) must be owned by the same refiner.

(2) *Equations*—(i) *Parameter determinations.* Average baseline fuel parameters shall be determined separately for summer and winter using summer and winter data (per paragraph (d)(1)(i)(A) of this section), respectively, in the applicable equation listed in paragraphs (e)(2) (ii) through (iv) of this section, except that average baseline winter RVP shall be 8.7 psi.

(ii) *Product included in parameter determinations.* In each of the equations listed in paragraphs (e)(2) (ii) through (iv) of this section, the following shall apply:

(A)(*1*) All gasoline produced to meet EPA's 1990 summertime volatility requirements shall be considered summer gasoline. All other gasoline shall be considered winter gasoline, except:

(*2*) Gasoline produced or imported for use in Hawaii, the Commonwealth of Puerto Rico, and the Virgin Islands that is subject to an approved petition under §80.93(d)(2) shall be considered summer gasoline for purposes of paragraph (e) of this section.

(B)(*1*) Baseline total annual 1990 gasoline volume shall be the larger of the total volume of gasoline produced in or shipped from the refinery in 1990.

(*2*) Baseline summer gasoline volume shall be the total volume of low volatility gasoline which met EPA's 1990 summertime volatility requirements. Baseline summer gasoline volume shall be determined on the same basis (produced or shipped) as baseline total annual gasoline volume.

(*3*) Baseline winter gasoline volume shall be the baseline total annual gasoline volume minus the baseline summer gasoline volume.

(C) Fuel parameter values shall be determined in the same units and at least to the same number of decimal places as the corresponding fuel parameter listed in paragraph (c)(5) of this section.

(D) Volumes shall be reported to the nearest barrel or to the degree at which historical records were kept.

(iii) *Method 1.* Summer and winter Method 1-type data, per paragraph (c)(1) of this section, shall be evaluated separately according to the following equation:

$$X_{bs} = \sum_{g=1}^{p_s} \left(\frac{T_{gs}}{n_s} \times \frac{\sum_{i=1}^{n_{gs}} \left(X_{gis} \times V_{gis} \times SG_{gis} \right)}{\sum_{i=1}^{n_{gs}} \left(V_{gis} \times SG_{gis} \right)} \right)$$

where:

X_{bs} = summer or winter baseline value of fuel parameter X for the refinery

s = season, summer or winter, per paragraph (d)(1)(i)(A)(*1*) of this section

g = separate grade of season s gasoline produced by the refinery in 1990

p_s = total number of different grades of season s gasoline produced by the refinery in 1990

T_{gs} = total volume of season s grade g gasoline produced in 1990

N_s = total volume of season s gasoline produced by the refinery in 1990

i = separate batch or shipment of season s 1990 gasoline sampled

n_{gs} = total number of season s samples of grade g gasoline

X_{gis} = parameter value of grade g gasoline sample i in season s

V_{gis} = volume of season s grade g gasoline sample i

SG_{gis} = specific gravity of season s grade g gasoline sample i (used only for fuel parameters measured on a weight basis)

(iv) *Method 2.* Summer and winter Method 2-type data, per paragraph (c)(2) of this section, shall be evaluated separately according to the following equation:

$$X_{bs}^{m_s} = \sum_{j=1}^{T_{js}} \left\{ \frac{}{N_s} \times \left(\frac{\sum_{i=1}^{n_{js}} X_{ijs}}{n_{js}} + \frac{\sum_{i=1}^{p_{js}} \left(X_{ijs} \times V_{ijs} \times SG_{ijs} \right)}{\sum_{i=1}^{p_{js}} \left(V_{ijs} \times SG_{ijs} \right)} \right) \right\}$$

where

X_{bs} = Summer or winter baseline value of fuel parameter × for the refinery

s = season, summer or winter, per paragraph (d)(1)(i)(A)(*1*) of this section

j = type of blendstock (e.g., reformate, isomerate, alkylate, etc.)

m_s = total types of blendstocks in season s 1990 gasoline

T_{js} = total 1990 volume of blendstock j used in the refinery's season s gasoline

N_s = total volume of season s gasoline produced in the refinery in 1990

i = sample of blendstock j

n_{js} = number of samples of season s blendstock j from continuous process streams

X_{ijs} = parameter value of sample i of season s blendstock j

p_{js} = number of samples of season s batch-produced blendstock j

V_{ijs} = volume of batch of sample i of season s blendstock j

SG_{ijs} = specific gravity of sample i of season s blendstock j (used only for fuel parameters measured on a weight basis)

(v) *Method 3.* (A) Post-1990 Blendstock. Summer and winter Method 3-type data, per paragraph (c)(3) of this section, shall be evaluated separately according to the following equation:

$$X_{bs} = \sum_{j=1}^{m_s} \left(\frac{T_{js}}{N_s} \times \left(\frac{\sum_{i=1}^{n_{js}} X_{ijs}}{n_{js}} + \frac{\sum_{i=1}^{p_{js}} \left(X_{ijs} \times V_{ijs} \times SG_{ijs} \right)}{\sum_{i=1}^{p_{js}} \left(V_{ijs} \times SG_{ijs} \right)} \right) \right)$$

where

X_{bs} = Summer or winter baseline value of fuel parameter X for the refinery

s = season, summer or winter, per paragraph (d)(1)(i)(A)(*1*) of this section

j = type of blendstock (e.g., reformate, isomerate, alkylate, etc.)

m_s = total types of blendstocks in season s 1990 gasoline

T_{js} = total 1990 volume of blendstock j used in the refinery's season s gasoline

N_s = total volume of season s gasoline produced in the refinery in 1990

i = sample of post-1990 season s blendstock j

n_{js} = number of samples of post-1990 season s blendstock j from continuous process streams

X_{ijs} = parameter value of sample i of post-1990 season s blendstock j

p_{js} = number of samples of post-1990 season s batch-produced blendstock j

V_{ijs} = volume of post-1990 batch of sample i of season s blendstock j

SG_{ijs} = specific gravity of sample i of season s blendstock j (used only for fuel parameters measured on a weight basis)

(B) Post-1990 gasoline. Summer and winter Method 3-type gasoline data, per paragraph (c)(3) of this section, shall be evaluated separately according tothe following equation:

$$X_{bs} = \sum_{g=1}^{p_s} \left(\frac{T_{gs}}{N_s} \times \frac{\sum_{i=1}^{n_{gs}} \left(X_{gis} \times V_{gis} \times SG_{gis} \right)}{\sum_{i=1}^{n_{gs}} \left(V_{gis} \times SG_{gis} \right)} \right)$$

where:

X_{bs} = Summer or winter baseline value of fuel parameter X for the refinery

s = season, summer or winter, per paragraph (d)(1)(i)(A)(*1*) of this section

g = separate grade of season s gasoline produced by the refinery in 1990

p_s = total number of different grades of season s gasoline produced by the refinery in 1990

T_{gs} = total volume of season s grade g gasoline produced in 1990

N_s = total volume of season s gasoline produced by the refinery in 1990

i = separate batch or shipment of post-1990 season s gasoline sampled

n_{gs} = total number of samples of post-1990 season s grade g gasoline

X_{gis} = parameter value of post-1990 grade g season s gasoline sample i

V_{gis} = volume of post-1990 season s grade g gasoline sample i

SG_{gis} = specific gravity of post-1990 season s grade g gasoline sample i (used only for fuel parameters measured on a weight basis)

(3) *Percent evaporated determination.* (i) Baseline E200 and E300 values shall be determined directly from actual measurement data.

(ii) If the data per paragraph (e)(3)(i) of this section are unavailable, upon petition and approval, baseline E200 and E300 values shall be determined from the following equations using the baseline T50 and T90 values, if the baseline T50 and T90 values are otherwise acceptable:

$$E200 = 147.91 - (0.49 \times T50)$$
$$E300 = 155.47 - (0.22 \times T90)$$

(4) *Oxygen in the baseline.* Baseline fuel parameter values shall be determined on both an oxygenated and non-oxygenated basis.

(i) If baseline values are determined first on an oxygenated basis, per paragraph (e) of this section, the calculations in paragraphs (e)(4)(i) (A) through (C) of this section shall be performed to determine the value of each baseline parameter on a non-oxygenated basis.

(A) Benzene, aromatic, olefin and sulfur content shall be determined on a non-oxygenated basis according to the following equation:

$$UV = [AV/(100 - OV)] \times 100$$

where

UV = non-oxygenated parameter value

AV = oxygenated parameter value

OV = 1990 oxygenate volume as a percent of total production

(B) Reid vapor pressure (RVP) shall be determined on a non-oxygenated basis according to the following equation:

$$UR = \left[BR - \left\{ \sum_{i=1}^{n} \left(OV_i \times OR_i \right) \right\} / 100 \right] \Big/ \left[\left\{ 100 - \sum_{i=1}^{n} OV_i \right\} / 100 \right]$$

where

UR = non-oxygenated RVP (baseline value)

BR = oxygenated RVP

i = type of oxygenate used in 1990

n = total number of different types of oxygenates used in 1990

OV_i = 1990 volume, as a percent of total production, of oxygenate i

OR_i = blending RVP of oxygenate i

(C) Test data and engineering judgement shall be used to estimate T90, T50, E300 and E200 baseline values on a non-oxygenated basis. Allowances shall

be made for physical dilution and distillation effects only, and not for refinery operational changes, e.g., decreased reformer severity required due to the octane value of oxygenate which would reduce aromatics.

(ii) If baseline values are determined first on a non-oxygenated basis, the calculations in paragraphs (e)(4)(ii) (A) through (C) of this section shall be performed to determine the value of each baseline parameter on an oxygenated basis.

(A) Benzene, aromatic, olefin and sulfur content shall be determined on an oxygenated basis according to the following equation:

$$AV = UV \times (100 - OV) / 100$$

where

AV = oxygenated parameter value
UV = non-oxygenated parameter value
OV = 1990 oxygenate volume as a percent of total production

(B) Reid vapor pressure (RVP) shall be determined on an oxygenated basis according to the following equation:

$$BR = \left\{ UR \times \left[100 - \sum_{i=1}^{n} (OV_i) \right] + \sum_{i=1}^{n} \left(OV_i \times OR_i \right) \right\} / 100$$

where

BR = oxygenated RVP
UR = non-oxygenated RVP
i = type of oxygenate
n = total number of different types of oxygenates
OV_i = 1990 volume, as a percent of total production, of oxygenate i
OR_i = blending RVP of oxygenate i

(C) Test data and engineering judgement shall be used to estimate T90, T50, E300 and E200 baseline values on an oxygenated basis. Allowances shall be made for physical dilution and distillation effects only, and not for refinery operational changes, e.g., decreased reformer severity required due to the octane value of oxygenate which would reduce aromatics.

(5) *Work-in-progress*. A refiner may, upon petition and approval (per § 80.93), be allowed to account for work- in-progress at one or more of its refineries in 1990 in the determination of that refinery's baseline fuel parameters using Method 1, 2 or 3-type data if it meets the requirements specified in this paragraph (e)(5).

(i) Work-in-progress shall include:

(A) Refinery modification projects involving gasoline blendstock or distillate producing units which were under construction in 1990; or

(B) Refinery modification projects involving gasoline blendstock or distillate producing units which were contracted for prior to or in 1990 such that the refiner was committed to purchasing materials and constructing the project.

(ii) The modifications discussed in paragraph (e)(5)(i) of this section must have been initiated with intent of complying with a legislative or regulatory environmental requirement enacted or promulgated prior to January 1, 1991.

(iii) When comparing emissions or parameter values determined with and without the anticipated work-in-progress adjustment, at least one of the following situations results when comparing annual average baseline values per § 80.90:

(A) A 2.5 percent or greater difference in exhaust benzene emissions (per § 80.90); or

(B) A 2.5 percent or greater difference in total exhaust toxics emissions (per § 80.90(d)); or

(C) A 2.5 percent or greater difference in NO_X emissions (per § 80.90(e)); or

(D) A 10.0 percent or greater difference in sulfur values; or

(E) A 10.0 percent or greater difference in olefin values; or

(F) A 10.0 percent or greater difference in T90 values.

(iv) The requirements of paragraph (e)(5)(iii) of this section shall be determined according to the following equation:

$$\text{Percent Difference} = \frac{\left|\text{Unadjusted Value} - \text{Adjusted Value}\right|}{\text{Unadjusted Value}} \times 100$$

(v) The capital involved in the work-in-progress is at least:

(A) 10.0 percent of the refinery's depreciated book value as of the work-in-progress start-up date; or

(B) $10 million.

(vi) Sufficient data shall have been obtained since reliable operation of the work-in-progress was achieved. Such data shall be used in the determination of the baseline value, due to the work-in-progress, of each of the fuel parameters specified in §80.91(a)(2)(i) and as verification of the effect of the work-in-progress.

(A) The baseline value, due to the work-in-progress, of each of the fuel parameters specified in §80.91(a)(2)(i) shall be used in the determination of the emissions specified in §80.90.

(B) The baseline values of sulfur, olefins and E300, due to the work-in-progress, shall be used in the determination of the emissions specified in §80.41(j)(3).

(vii) The annual average baseline values of exhaust benzene emissions, per §80.90(b) and §80.90(c), exhaust toxics emissions, per §80.90(d), and NO_X emissions, per §80.90(e), are the values resulting from the work-in-progress baseline adjustment, not to exceed the larger of:

(A) The unadjusted annual average baseline value of each emission specified in this paragraph (e)(5)(vii); or

(B) The following values:

(*1*) Exhaust benzene emissions, simple model, 6.77;

(*2*) Exhaust benzene emissions, complex model, 34.68 mg/mile;

(*3*) Exhaust toxics emissions, 53.20 mg/mile in Phase I, 109.7 mg/mile in Phase II;

(*4*) NO_X emissions, 750.1 mg/mile in Phase I, 1534. mg/mile in Phase II.

(viii) When compliance is achieved using the simple model, per §80.41 and/or §80.101, the baseline values of sulfur, olefins and T90 are the values resulting from the work-in-progress baseline adjustment, not to exceed the larger of:

(A) The unadjusted annual average baseline value of each fuel parameter specified in paragraph (e)(5)(viii) of this section; or

(B) The following values:

(*1*) Sulfur, 355 ppm;

(*2*) Olefins, 11.3 volume percent;

(*3*) T90, 349 °F; or

(C) An adjusted annual average baseline fuel parameter value for sulfur, olefins and T90 such that exhaust emissions of VOC, toxics, and NO_X do not exceed the complex model emission levels specified in paragraph (e)(5)(vii)(B) of this section. In the petition for a work-in-progress adjustment, the refiner shall specify sulfur, olefins and T90 values that meet these emission levels.

(ix) All work-in-progress adjustments must be accompanied by:

(A) Unadjusted and adjusted fuel parameters, emissions, and volumes; and

(B) A description of the current status of the work-in-progress (i.e., the refinery modification project) and the date on which normal operations were achieved; and

(C) A narrative describing the situation, the types of calculations, and the reasoning supporting the types of calculations done to determine the adjusted values.

(6) *Baseline adjustment for extenuating circumstances.* (i) Baseline adjustments may be allowed, upon petition and approval (per §80.93), if a refinery had downtime of a gasoline blendstock producing unit for 30 days or more in 1990 due to:

(A) Unplanned, unforeseen circumstances; or

(B) Non-annual maintenance (turnaround).

(ii) Fuel parameter and volume adjustments shall be made by assuming that the downtime did not occur in 1990.

(iii) All extenuating circumstance adjustments must be accompanied by:

(A) Unadjusted and adjusted fuel parameters, emissions, and volumes; and

(B) A description of the current status of the extenuating circumstance and the date on which normal operations were achieved; and

(C) A narrative describing the situation, the types of calculations, and the reasoning supporting the types of calculations done to determine the adjusted values.

(7) *Baseline adjustments for 1990 JP–4 production.* (i) Baseline adjustments may be allowed, upon petition and approval (per § 80.93), if a refinery produced JP–4 jet fuel in 1990 and all of the following requirements are also met:

(A) Refinery type.

(*1*) The refinery is the only refinery of a refiner such that it cannot form an aggregate baseline with another refinery (per § 80.101(h)); or

(*2*) The refinery is one refinery of a multi-refinery refiner for which all of the refiner's refineries produced JP–4 in 1990; or

(*3*) The refinery is one refinery of a multi-refinery refiner for which not all of the refiner's refineries produced JP–4 in 1990.

(B) No refinery of a given refiner produces reformulated gasoline. If any refinery of the refiner produces reformulated gasoline at any time in a calendar year, the compliance baselines of all the refiner's refineries receiving a baseline adjustment per this paragraph (e)(7) shall revert to the unadjusted baselines of each respective refinery for that year and all subsequent years.

(C) 1990 JP–4 to gasoline ratio.

(*1*) For a refiner per paragraph (e)(7)(i)(A)(*1*) of this section, the ratio of its refinery's 1990 JP–4 production to its 1990 gasoline production must be greater than or equal to 0.15.

(*2*) For a refiner per paragraph (e)(7)(i)(A)(*2*) of this section, the ratio of each of its refinery's 1990 JP–4 production to its 1990 gasoline production must be greater than or equal to 0.15.

(*3*) For a refiner per paragraph (e)(7)(i)(A)(*3*) of this section, the ratio of the refiner's 1990 JP–4 production to its 1990 gasoline production must be greater than or equal to 0.15, when determined across all of its refineries. Such a refiner must comply with its anti-dumping requirements on an aggregate basis, per § 80.101(h), across all of its refineries.

(ii) Fuel parameter and volume adjustments shall be made by assuming that no JP–4 was produced in 1990.

(iii) All adjustments due to 1990 JP–4 production must be accompanied by:

(A) Unadjusted and adjusted fuel parameters, emissions, and volumes; and

(B) A narrative describing the situation, the types of calculations, and the reasoning supporting the types of calculations done to determine the adjusted values.

(8) Baseline adjustments due to increasing crude sulfur content.

(i) Baseline adjustments may be allowed, upon petition and approval (per § 80.93), if a refinery meets all of the following requirements:

(A) The refinery does not produce reformulated gasoline. If the refinery produces reformulated gasoline at any time in a calendar year, its compliance baseline shall revert to its unadjusted baseline for that year and all subsequent years;

(B) Has an unadjusted baseline sulfur value which is less than or equal to 50 parts per million (ppm);

(C) Is not aggregated with one or more other refineries (per § 80.101(h)). If a refinery which received an adjustment per this paragraph (e)(8) subsequently is included in an aggregate baseline, its compliance baseline shall revert to its unadjusted baseline for that year and all subsequent years;

(D) Can show that installation of the refinery units necessary to process higher sulfur crude oil supplies to comply with the refinery's unadjusted baseline would cost at least $10 million or be greater than or equal to 10 percent of the depreciated book value of the refinery as of January 1, 1995;

(E) Can show that it could not reasonably or economically obtain crude oil from an alternative source that would permit it to produce conventional gasoline which would comply with its unadjusted baseline;

(F) Has experienced an increase of greater than or equal to 25 percent in the average sulfur content of the crude oil used in the production of gasoline in the refinery since 1990, calculated as follows:

$$\frac{(CSHI - CS90)}{CS90} \times 100 = CS\%CHG$$

where:

CSHI = highest annual average crude sulfur (in ppm), of the crude slates used in the production of gasoline, determined over the years 1991–1994;

CS90 = 1990 annual average crude slate sulfur (in ppm), of the crude slates used in the production of gasoline;

CS%CHG = percent change in average sulfur content of crude slate;

(G) Can show that gasoline sulfur changes are directly and solely attributable to the crude sulfur change, and not due to alterations in refinery operation nor choice of products.

(ii) The adjusted baseline sulfur value shall be the actual baseline sulfur value, in ppm, plus 100 ppm.

(iii) All adjustments made pursuant to this paragraph (e)(8) must be accompanied by:

(A) Unadjusted and adjusted fuel parameters and emissions; and

(B) A narrative describing the situation, the types of calculations, and the reasoning supporting the types of calculations done to determine the adjusted values.

(9) Baseline adjustment for low sulfur and olefins.

(i) Baseline adjustments may be allowed if a refinery meets all of the following requirements:

(A) The unadjusted annual average baseline sulfur value of the refinery is less than or equal to 30 parts per million (ppm);

(B) The unadjusted annual average baseline olefin value of the refinery is less than or equal to 1.0 percent by volume (vol%).

(ii) Adjusted baseline values.

(A) The adjusted baseline shall have an annual average sulfur value of 30 ppm, and an annual average olefin value of 1.0 vol%.

(B) The adjusted baseline shall have a summer sulfur value of 30 ppm, and a summer olefin value of 1.0 vol%.

(C) The adjusted baseline shall have a winter sulfur value of 30 ppm, and a winter olefin value of 1.0 vol%.

(f) *Baseline volume and emissions determination*—(1) *Individual baseline volume.* (i) The individual baseline volume of a refinery described in paragraph (b)(1)(i) of this section shall be the larger of the total gasoline volume produced in or shipped from the refinery in 1990, excluding gasoline blendstocks and exported gasoline, and including the oxygenate volume associated with any product meeting the requirements specified in paragraph (c)(1)(ii) of this section.

(ii) Gasoline brought into the refinery in 1990 which exited the refinery, in 1990, unchanged shall not be included in determining the refinery's baseline volume.

(iii) If a refiner is allowed to adjust its baseline per paragraphs (e)(5) through (e)(7) of this section, its individual baseline volume shall be the volume determined after the adjustment.

(iv) The individual baseline volume for facilities deemed closely integrated, per paragraph (e)(1) of this section, shall be the combined 1990 gasoline production of the facilities, so long as mutual volumes are not double-counted, i.e., volumes of blendstock sent from the refinery to the blending facility should not be included in the blending facility's volume.

(v) The baseline volume of a refiner, per paragraph (b)(3) of this section, shall be the larger of the total gasoline volume produced in or shipped from the refinery in 1990, excluding gasoline blendstocks and exported gasoline.

(vi) The baseline volume of an importer, per paragraph (b)(4) of this section, shall be the total gasoline volume imported into the U.S. in 1990.

(2) *Individual baseline emissions.* (i) Individual annual average baseline emissions (per § 80.90) shall be determined for every refinery, refiner or importer, as applicable.

(ii) If the baseline fuel value for aromatics, olefins, and/or benzene (determined per paragraph (e) of this section) is higher than the high end of the valid range limits specified in § 80.42(c)(1) if compliance is being determined under the Simple Model, or in § 80.45(f)(1)(ii) if compliance is being determined under the Complex Model, then the valid range limits may be extended for conventional gasoline in the following manner:

(A) The new high end of the valid range for aromatics is determined from the following equation:

NAROLIM = AROBASE + 5.0 volume percent

where

NAROLIM = The new high end of the valid range limit for aromatics, in volume percent

AROBASE = The seasonal baseline fuel value for aromatics, in volume percent

(B) The new high end of the valid range for olefins is determined from the following equation:

NOLELIM = OLEBASE + 3.0 volume percent

where

NOLELIM = The new high end of the valid range limit for olefins, in volume percent

OLEBASE = The seasonal baseline fuel value for olefins, in volume percent

(C) The new high end of the valid range for benzene is determined from the following equation:

NBENLIM = BENBASE + 0.5 volume percent

where

NBENLIM = The new high end of the valid range limit for benzene, in volume percent

BENBASE = The seasonal baseline fuel value for benzene, in volume percent

(D) The extension of the valid range is limited to the applicable summer or winter season in which the baseline fuel values for aromatics, olefins, and/or benzene exceed the high end of the valid range as described in paragraph (f)(2)(ii) of this section. Also, the extension of the valid range is limited to use by the refiner whose baseline value for aromatics, olefins, and/or benzene was higher than the valid range limits as described in paragraph (f)(2)(ii) of this section.

(E) Any extension of the Simple Model valid range limits is applicable only to the Simple Model. Likewise any extension of the Complex Model valid range limits is applicable only to the Complex Model.

(F) The valid range extensions calculated in paragraphs (f)(2)(ii)(A), (B), and (C) of this section are applicable to both the baseline fuel and target fuel for the purposes of determining the compliance status of conventional gasolines. The extended valid range limit represents the maximum value for that parameter above which fuels cannot be evaluated with the applicable compliance model.

(G) Under the Simple Model, baseline and compliance calculations shall subscribe to the following limitations:

(*1*) If the aromatics valid range has been extended per paragraph (f)(2)(ii)(A) of this section, an aromatics value equal to the high end of the valid range specified in § 80.42(c)(1) shall be used for the purposes of calculating the exhaust benzene fraction.

(*2*) If the fuel benzene valid range has been extended per paragraph (f)(2)(ii)(C) of this section, a benzene value equal to the high end of the valid range specified in § 80.42(c)(1) shall be used for the purposes of calculating the exhaust benzene fraction.

(H) Under the Complex Model, baseline and compliance calculations shall subscribe to the following limitations:

(*1*) If the aromatics valid range has been extended per paragraph (f)(2)(ii)(A) of this section, an aromatics value equal to the high end of the valid range specified in § 80.45(f)(1)(ii) shall be used for the purposes of calculating emissions performances.

(*2*) If the olefins valid range has been extended per paragraph (f)(2)(ii)(B) of this section, an olefins value equal to the high end of the valid range specified in § 80.45(f)(1)(ii) shall be used for the target fuel for the purposes of calculating emissions performances.

(*3*) If the benzene valid range has been extended per paragraph (f)(2)(ii)(C) of this section, a benzene value equal to the high end of the valid range specified in § 80.45(f)(1)(ii) shall be used for the target fuel for the purposes of calculating emissions performances.

(iii) Facilities deemed closely integrated, per paragraph (e)(1) of this section, shall have a single set of annual average individual baseline emissions.

(iv) Aggregate baselines (per § 80.101(h)) must have the NO_X emissions of all refineries in the aggregate determined on the same basis, using either oxygenated or non-oxygenated baseline fuel parameters.

(3) *Geographic considerations requiring individual conventional gasoline compliance baselines.* (i) Anyone may petition EPA to establish separate baselines for

refineries located in and providing conventional gasoline to an area with a limited gasoline distribution system if it can show that the area is experiencing increased toxics emissions due to an ozone nonattainment area opting into the reformulated gasoline program pursuant to section 211(k)(6) of the Act.

(ii) If EPA agrees with the finding of paragraph (f)(4)(i) of this section, it shall require that the baselines of such refineries be separate from refineries not located in the area.

(iii) If two (2) or more of a refiner's refineries are located in the geographic area of concern, the refiner may aggregate the baseline emissions and sulfur, olefin and T90 values of the refineries or have an individual baseline for one or more of the refineries, per paragraph (f)(3) of this section.

(4) *Baseline recalculations.* Aggregate baseline exhaust emissions (per § 80.90) and baseline sulfur, olefin and T90 values and aggregate baseline volumes shall be recalculated under the following circumstances:

(i) A refinery included in an aggregate baseline is entirely shutdown. If the shutdown refinery was part of an aggregate baseline, the aggregate baseline emissions, aggregate baseline sulfur, olefin and T90 values and aggregate volume shall be recalculated to account for the removal of the shutdown refinery's contributions to the aggregate baseline.

(ii) A refinery exchanges owners.

(A) All aggregate baselines affected by the exchange shall be recalculated to reflect the addition or subtraction of the baseline exhaust emissions, sulfur, olefin and T90 values and volumes of that refinery.

(B) The new owner may elect to establish an individual baseline for the refinery or to include it in an aggregate baseline.

(C) If the refinery was part of an aggregate of three or more refineries, the remaining refineries in the aggregate from which that refinery was removed will have a new aggregate baseline. If the refinery was part of an aggregate of only two refineries, the remaining refinery will have an individual baseline.

(g) *Inability to meet the requirements of this section.* If a refiner or importer is unable to comply with one or more of the requirements specified in paragraphs (a) through (f) of this section, it may, upon petition and approval, accommodate the lack of compliance in a reasonable, logical, technically sound manner, considering the appropriateness of the alternative. A narrative of the situation, as well as any calculations and results determined, must be documented.

[59 FR 7860, Feb. 16, 1994, as amended at 59 FR 36966, July 20, 1994; 60 FR 6032, Feb. 1, 1995; 60 FR 40008, Aug. 4, 1995; 62 FR 9883, Mar. 4, 1997; 67 FR 8737, Feb. 26, 2002; 72 FR 60579, Oct. 25, 2007]

§ 80.92 Baseline auditor requirements.

(a) *General requirements.* (1) Each refiner or importer is required to have its individual baseline determination methodology, resulting baseline fuel parameter, volume and emissions values verified by an auditor which meets the requirements described in this section. A refiner or importer which has the anti-dumping statutory baseline as its individual baseline is exempt from this requirement.

(2) An auditor may be an individual or organization, and may utilize contractors and subcontractors to assist in the verification of a baseline.

(3) If an auditor is an organization, one or more persons shall be designated as primary analyst(s). The primary analyst(s) shall meet the requirements described in paragraphs (c) (2) and (3) of this section and shall be responsible for the baseline audit per paragraph (f) of this section.

(b) *Independence.* The auditor, its contractors, subcontractors and their organizations shall be independent of the submitting organization. All of the criteria listed in paragraphs (b) (1) and (2) of this section must be met by every individual involved in substantive aspects of the baseline verification.

(1) *Previous employment criteria.* (i) None of the auditing personnel, including any contractor or subcontractor personnel, involved in the baseline verification for a refiner or importer shall have been employed by the refiner or importer at any time during the three (3) years preceding the date of hire of the auditor by the refiner or

importer for baseline verification purposes.

(ii) Auditor personnel may have been a contractor or subcontractor to the refiner or importer, as long as all other criteria listed in this section are met.

(iii) Auditor personnel may also have developed the baseline of the refiner or importer whose baseline they are auditing, but not as an employee (per paragraph (b)(1)(i) of this section). Those involved only in the development of the baseline of the refiner or importer need not meet the requirements specified in this section.

(2) *Financial criteria*. Neither the primary analyst, nor the auditing organization nor any organization or individual which may be contracted or subcontracted to supply baseline verification expertise shall:

(i) Have received more than one quarter of its revenue from the refiner or importer during the year prior to the date of hire of the auditor by the refiner or importer for auditing purposes. Income received from the refiner or importer to develop the baseline being audited is excepted; nor

(ii) Have a total of more than 10 percent of its net worth with the refiner or importer; nor

(iii) Receive compensation for the audit which is dependent on the outcome of the audit.

(c) *Technical ability*. All of the following criteria must be met by the auditor in order to demonstrate its technical capability to perform the baseline audit:

(1) The auditor shall be technically capable of evaluating a baseline determination. It shall have personnel familiar with petroleum refining processes, including associated computational procedures, methods of product analysis and economics, and expertise in conducting the auditing process, including skills for effective data gathering and analysis.

(2) The primary analyst must understand all technical details of the entire baseline audit process.

(3)(i) The primary analyst shall have worked at least five (5) years in either refinery operations or as a consultant for the refining industry.

(ii) If one or more computer models designed for refinery planning and/or economic analysis are used in the verification of an individual baseline, the primary analyst must have at least three (3) years experience working with the model(s) utilized in the verification.

(iii) EPA may, upon petition, waive one or more of the requirements specified in paragraph (c)(3) of this section if the technical capability of the primary analyst is demonstrated to the satisfaction of the Director of the Office of Mobile Sources, or designee.

(d) *Auditor qualification statement*. A statement documenting the qualifications of the auditor, primary analyst(s), contractors, subcontractors and their organizations must be submitted to EPA (Fuel Studies and Standards Branch, Baseline Auditor, U.S. EPA, 2565 Plymouth Rd., Ann Arbor, MI 48105).

(1) *Timing*. (i) The auditor qualification statement may be submitted by the refiner or importer prior to baseline submission (per § 80.93) or by a potential auditor at any time. The auditor will be deemed certified when all qualifications are met, to the satisfaction of the Director of the Office of Mobile Sources, or designee. If no response is received from EPA within 45 days of application or today's date, whichever is later, the auditor shall be deemed certified.

(ii) The auditor qualification statement may be submitted by the refiner or importer with its baseline submission (per § 80.93). If the auditor does not meet the criteria specified in this section, the baseline submission will not be accepted.

(2) *Content*. The auditor qualification statement must contain all of the following information and may contain additional information which may aid EPA's review of the qualification statement:

(i) The name and address of each person and organization involved in substantive aspects of the baseline audit, including the auditor, primary analyst(s), others within the organization, and contractors and subcontractors;

(ii) The refiners and/or importers for which the auditor, its contractors and subcontractors and their organizations do not meet the independence criteria

described in paragraph (b) of this section; and

(iii) The technical qualifications and experience of each person involved in the baseline audit, including a showing that the requirements described in paragraph (c) of this section are met.

(e) *Refiner and importer responsibility.* (1) Each refiner and importer required to have its baseline verified by an auditor (per paragraph (a)(1) of this section) is responsible for utilizing an auditor for baseline verification which meets the requirements specified in paragraphs (b) and (c) of this section.

(2) A refiner's or importer's baseline submission will not be accepted until it has been verified using an auditor which meets the requirements specified in paragraphs (b) and (c) of this section.

(f) *Auditor responsibilities.* (1) The auditor must verify that all baseline submission requirements are fulfilled. This includes, but is not limited to, the following:

(i) Verifying that all data is correctly accounted for;

(ii) Verifying that all calculations are performed correctly;

(iii) Verifying that all adjustments to the data and/or calculations to account for post-1990 data, work-in-progress, and/or extenuating or other circumstances, as allowed per § 80.91, are valid and performed correctly.

(2) The primary analyst shall prepare and sign a statement, to be included in the baseline submission of the refiner or importer, stating that:

(i) He/she has thoroughly reviewed the sampling methodology and baseline calculations; and

(ii) To the best of his/her knowledge, the requirements and intentions of the rulemaking are met in the baseline determination; and

(iii) He/she agrees with the final baseline parameter, volume and emission values listed in the baseline submission.

(3) The auditor may be subject to debarment under U.S.C. 1001 if it displays gross incompetency, intentionally commits an error in the verification process or misrepresents itself or information in the baseline verification.

[59 FR 7860, Feb. 16, 1994, as amended at 67 FR 8737, Feb. 26, 2002]

§ 80.93 Individual baseline submission and approval.

(a) *Submission timing.* (1) Each refiner, blender or importer shall submit two copies of its individual baseline to EPA (Fuel Studies and Standards Branch, Baseline Submission, U.S. EPA, 2565 Plymouth Rd., Ann Arbor, MI 48105) not later than June 1, 1994.

(2) If a refiner must collect data after December 15, 1993 (per § 80.91(d)(2)), it shall submit two copies of its individual baseline to EPA (per § 80.93(a)(1)) by September 1, 1994.

(3)(i) All petitions required for baseline adjustments or methodology deviations will be approved or disapproved by the Director of the Office of Mobile Sources, or designee. All instances where a ''showing'' or other proof is required are also subject to approval by the Director of the Office of Mobile Sources, or designee.

(ii) Petitions, ''showings,'' and other associated proof may be submitted to EPA prior to submittal of the individual baseline (per paragraphs (a)(1) and (a)(2) of this section). EPA will attempt to review and approve, disapprove or otherwise comment on the petition, etc., prior to the deadline for baseline submittal.

(iii) In the event that EPA does not comment on the petition prior to the deadline for baseline submittal, the refiner or importer must still comply with the applicable baseline submittal deadline.

(iv) Petitions submitted prior to the deadline for baseline submittals shall be submitted to the EPA at the following address: Fuels Studies and Standards Branch, Baseline Petition, U.S. EPA, 2565 Plymouth Road, Ann Arbor, Michigan 48105.

(4) If a baseline recalculation is required per § 80.91(f), documentation and recalculation of all affected baselines shall be submitted to EPA within 30 days of the previous baseline(s) becoming inaccurate due to the circumstances outlined in § 80.91(f).

(b) *Submission content.* (1) Individual baseline submissions shall include, at minimum, the information specified in this paragraph (b).

(i) During its review and evaluation of the baseline submission, EPA may require a refiner or importer to submit

additional information in support of the baseline determination.

(ii) Additional information which may assist EPA during its review and evaluation of the baseline may be included at the submitter's discretion.

(2) Administrative information shall include:

(i) Name and business address of the refiner or importer;

(ii) Name, business address and business phone number of the company contact;

(iii) Address and physical location of each refinery, terminal or import facility;

(iv) Address and physical location where documents which are supportive of the baseline determination for each facility are kept;

(3) The chief executive officer statement shall be:

(i) A statement signed by the chief executive officer of the company, or designee, which states that:

(A) The company is complying with the requirements as a refiner, blender or importer, as appropriate;

(B) The data used in the baseline determination is the extent of the data available for the determination of all required baseline fuel parameters;

(C) All calculations and procedures followed per §§ 80.90 through 80.93 have been done correctly;

(D) Proper adjustments have been made to the data or in the calculations, as applicable;

(E) The requirements and intentions of the rulemaking have been met in determining the baseline fuel parameters; and

(F) The baseline fuel parameter values determined for each facility represent that facility's 1990 gasoline to the fullest extent possible.

(ii) A refiner or importer which is permitted to utilize the parameter values specified in § 80.91(c)(5), and does so, shall submit a statement signed by the chief executive officer of the company, or designee, indicating that insufficient data exist for a baseline determination by the types of data allowed for that entity, as specified in § 80.91.

(4) The auditor-related requirements are:

(i) Name, address, telephone number and date of hire of each auditor hired for baseline verification, whether or not the auditor was retained through the baseline approval process.

(ii) Identification of the auditor responsible for the verification. A copy of this auditor's qualification statement, per § 80.92, must be included if the auditor has not been approved by EPA, per § 80.92;

(iii) Indication of the primary analyst(s) involved in each refinery's baseline verification; and

(iv) The signed auditor verification statement, per § 80.92.

(5) The following baseline information for each refinery, refiner or importer, as applicable, shall be provided:

(i) Individual baseline fuel parameter values, on an oxygenated and non-oxygenated basis, and on a summer and winter basis, per § 80.91;

(ii) Individual baseline exhaust emissions shall be shown separately, on a summer, winter and annual average basis (per § 80.90) as follows:

(A) Simple model exhaust benzene emissions;

(B) Complex model exhaust benzene emissions;

(C) Complex model exhaust toxics emissions, for Phase I;

(D) Complex model exhaust NO_X emissions, for Phase I, using oxygenated individual baseline fuel parameters;

(E) Complex model exhaust NO_X emissions, for Phase I, using non-oxygenated individual baseline fuel parameters;

(F) Complex model exhaust toxics emissions, for Phase II;

(G) Complex model exhaust NO_X emissions, for Phase II, using oxygenated individual baseline fuel parameters; and

(H) Complex model exhaust NO_X emissions, for Phase II, using non-oxygenated individual baseline fuel parameters;

(iii) Individual 1990 baseline gasoline volumes, per § 80.91, shall be shown separately on a summer, winter and annual average basis; and

(iv) Blendstock-to-gasoline ratios for each calendar year 1990 through to 1993, per § 80.102.

(6) *Confidential business information.* (i) Upon approval of an individual baseline, EPA will publish the individual

annualized baseline exhaust emissions, on an annual average basis, specified in paragraph (b)(5)(ii) of this section. Such individual baseline exhaust emissions shall not be considered confidential. In addition, the reporting information required under §§ 80.75(b)(2)(ii) (D), (G) and (J), and 80.105(a)(4)(i) (E), (H) and (K) shall not be considered confidential.

(ii) Information in the baseline submission which the submitter desires to be considered confidential business information (per 40 CFR part 2, subpart B) must be clearly identified. If no claim of confidentiality accompanies a submission when it is received by EPA, the information may be made available to the public without further notice to the submitter pursuant to the provisions of 40 CFR part 2, subpart B.

(7) Information related to baseline determination as specified in § 80.91 and paragraph (c) of this section.

(c) *Additional baseline submission requirements when Method 1-, 2- and/or 3-type data is utilized.* All requirements of this paragraph shall be reported separately for each facility, unless the facilities are closely integrated, per § 80.91.

(1) *General.* The following information shall be provided:

(i) The number of months in 1990 during which the facility was operating;

(ii) 1990 summer gasoline production volume, per § 80.91, total and by grade, for all gasoline produced but not exported;

(iii) 1990 winter gasoline production volume, per § 80.91, total and by grade, for all gasoline produced, excluding gasoline exported; and

(iv) Whether this facility is actually two facilities which are closely integrated, per § 80.91.

(2) *Baseline values.* The following shall be included for each fuel parameter for which a baseline value is required, per § 80.91:

(i) Narrative of the development of the baseline value of the fuel parameter, including discussion of the sampling and calculation methodologies, technical judgment used, effects of petition results on calculated values, and any additional information which may assist EPA in its review of the baseline;

(ii) Identification of the data-type(s), per § 80.91, used in the determination of a given fuel parameter;

(iii) Identification of test method. If not per § 80.46, include a narrative, explain differences and describing adequacy, per § 80.91;

(iv) Documentation that the minimum sampling requirements per § 80.91 have been met;

(v) Petition and narrative, if needed, for use of less than the minimum required data, per § 80.91;

(vi) Identification of instances of sample compositing per § 80.91;

(vii) Identification of streams for which one or more parameter values were deemed negligible per § 80.91; and

(viii) Discussion of the calculation of oxygenated or non-oxygenated fuel parameter values from non-oxygenated or oxygenated values, respectively, per § 80.91.

(3) *Method 1.* If Method 1-type data is utilized in the baseline determination, the following information on 1990 batches of gasoline, or shipments if not batch blended, are required by grade shall be provided:

(i) First and last sampling dates;

(ii) The following shall be indicated separately on a summer and winter basis, by month:

(A) Number of months sampled;

(B) Number of 1990 batches, or shipments if not batch blended;

(C) Total volume of all batches or shipments;

(D) Number of batches or shipments sampled;

(E) Total volume of all batches or shipments sampled;

(F) Baseline fuel parameter value, per § 80.91; and

(iii) A showing that data was available on every batch of 1990 gasoline, if applicable, per § 80.91 (b)(3) or (b)(4).

(4) *Method 2.* If Method 2-type data is utilized in the baseline determination, the following information on each type of 1990 blendstock used in the refinery's gasoline are required, by blendstock type shall be provided:

(i) First and last sampling dates; and

(ii) The following shall be indicated separately on a summer and winter basis, by month:

(A) Number of months sampled;

(B) Each type of blendstock used in 1990 gasoline and total number of blendstocks. Include all blendstocks produced, purchased or otherwise received which were blended to produce gasoline within the facility. Identify all blendstocks not produced in the facility but used in the facility's 1990 gasoline;

(C) Total volume of each blendstock used in gasoline in 1990;

(D) Identification of blendstock streams as batch or continuous;

(E) Number of blendstock samples from continuous blendstock streams;

(F) Number of blendstock samples from batch processes, including volume of each batch sampled; and

(G) Baseline fuel parameter value, per § 80.91.

(5) *Method 3, blendstock data.* The following information on each type of post-1990 gasoline blendstock used in the refinery's gasoline are required, by blendstock type shall be provided:

(i) First and last sampling dates;

(ii) The following shall be indicated separately on a summer and winter basis, by month:

(A) Number of post-1990 months sampled;

(B) Each type of blendstock used in 1990 gasoline and total number of blendstocks. Include all blendstocks produced, purchased or otherwise received which were blended to produce gasoline within the facility. Identify all blendstocks not produced in the facility but used in the facility's 1990 gasoline;

(C) Total volume of each blendstock used in gasoline in 1990;

(D) Identification of post-1990 blendstock streams as batch or continuous;

(E) Number of post-1990 blendstock samples from continuous blendstock streams;

(F) Number of post-1990 blendstock samples from batch processes, including volume of each batch sampled; and

(G) Baseline fuel parameter value, per § 80.91; and

(iii) Support documentation showing that the criteria of § 80.91 for using Method 3-type blendstock data are met.

(6) *Method 3, post-1990 gasoline data.* The following information on post-1990 batches of gasoline, or shipments if not batch blended, are required by grade:

(i) First and last sampling dates;

(ii) The following shall be indicated separately for summer and winter production, by month:

(A) Number of post-1990 months sampled;

(B) Number of post-1990 batches, or shipments if not batch blended;

(C) Total volume of all post-1990 batches or shipments;

(D) Number of post-1990 batches or shipments sampled;

(E) Volume of each post-1990 batch or shipment sampled; and

(F) Baseline fuel parameter value, per § 80.91; and

(iii) Support documentation showing that the criteria of § 80.91 for using post-1990 gasoline data are met.

(7) *Work-in-progress (WIP).* All of the following must be included in support of a WIP adjustment (per § 80.91(e)(5)):

(i) Petition including identification of the specific baseline emission(s) or parameter for which the WIP adjustment is desired;

(ii) Showing that all WIP criteria, per § 80.91(e)(5), are met;

(iii) Unadjusted and adjusted baseline fuel parameters, emissions and volume for the facility; and

(iv) Narrative, per § 80.91 (e)(5).

(8) *Extenuating circumstances.* All of the following must be included in support of an extenuating circumstance adjustment (per § 80.91 (e)(6) through (e)(7)):

(i) Petition including identification of the allowable circumstance, per § 80.91 (e)(6) through (e)(7);

(ii) Showing that all applicable criteria, per § 80.91 (e)(6) through (e)(7), are met;

(iii) Unadjusted and adjusted baseline fuel parameters, emissions and volume for the facility; and

(iv) Narrative, per § 80.91.

(9) *Other baseline information.* Narrative discussing any aspects of the baseline determination not already indicated per the requirements of paragraph (c)(8) of this section shall be provided.

(10) *Refinery information.* The following information, on a summer or winter basis, shall be provided:

(i) Refinery block flow diagram, showing principal refining units;

(ii) Principal refining unit charge rates and capacities;

(iii) Crude types utilized (names, gravities, and sulfur content) and crude charge rates; and

(iv) Information on the following units, if utilized in the refinery:

(A) Catalytic Cracking Unit: conversion, unit yields, gasoline fuel parameter values (per § 80.91(a)(2));

(B) Hydrocracking Unit: unit yields, gasoline fuel parameter values (per § 80.91(a)(2));

(C) Catalytic Reformer: unit yields, severities;

(D) Bottoms Processing Units (including, but not limited to, coking, extraction and hydrogen processing): gasoline stream yields;

(E) Yield structures for other principal units in the refinery (including but not limited to Alkylation, Polymerization, Isomerization, Etherification, Steam Cracking).

(d) *Requirements for a petition applicable to gasoline produced or imported for use in Alaska, Hawaii, the Commonwealth of Puerto Rico, and the Virgin Islands.* (1)(i) Any refiner for any refinery or importer with gasoline produced or imported for use in Alaska in its individual 1990 baseline may petition EPA to establish a separate 1990 baseline for gasoline produced or imported for use in Alaska using the winter Complex Model, and to use the winter statutory baseline values under § 80.91(c)(5) for any gasoline produced or imported for use in Alaska which is in excess of the refinery's or importer's 1990 volume of gasoline produced or imported for use in Alaska for purposes of determining the refinery's or importer's compliance baseline under § 80.101(f)(4).

(ii) Any refiner for any refinery or importer with an individual 1990 baseline which did not include any gasoline produced or imported for use in Alaska in 1990 may petition EPA to establish the refinery's or importer's winter baseline values as the compliance baseline under § 80.101(f)(3) for gasoline which the refiner or importer produces or imports for use in Alaska.

(iii) Any refiner for any refinery or importer subject only to the anti-dumping statutory baseline under § 80.91(c)(5) may petition EPA to have the winter statutory baseline values under § 80.91(c)(5) apply instead for purposes of determining the refinery's or importer's compliance baseline under § 80.101(f)(2) for gasoline which the refiner or importer produces or imports for use in Alaska.

(2)(i) Any refiner for any refinery or importer with gasoline produced or imported for use in Hawaii, and/or the Commonwealth of Puerto Rico, and/or the Virgin Islands in its individual 1990 baseline may petition EPA to establish a separate 1990 baseline for gasoline produced or imported for use in these areas using the summer Complex Model, and to use the summer statutory baseline values under § 80.91(c)(5) for any gasoline produced or imported for use in these areas in excess of the refinery's or importer's 1990 volume of gasoline produced or imported for use in these areas, for purposes of determining the refinery's or importer's compliance baseline under § 80.101(f)(4).

(ii) Any refiner for any refinery or importer with an individual 1990 baseline which did not include any gasoline produced or imported for use in Hawaii, and/or the Commonwealth of Puerto Rico, and/or the Virgin Islands in 1990 may petition EPA to establish the refinery's or importer's summer baseline values as the compliance baseline under § 80.101(f)(3) for gasoline which the refiner or importer produces or imports for use in these areas.

(iii) Any refiner or importer subject only to the anti-dumping statutory baseline under § 80.91(c)(5) may petition EPA to have the summer statutory baseline values under § 80.91(c)(5) apply instead for purposes of determining the refinery's or importer's compliance baseline under § 80.101(f)(2) for gasoline which the refiner or importer produces or imports for use in Hawaii, and/or the Commonwealth of Puerto Rico, and/or the Virgin Islands.

(iv) Any petition submitted in accordance with paragraphs (d)(2)(i), (d)(2)(ii) or (d)(2)(iii) of this section shall apply to gasoline produced or imported for use in all of the areas specified in the operative paragraphs.

(3) A petition under paragraphs (d)(1) or (d)(2) of this section must include the following:

(i) Identification of the refiner and refinery or importer;

(ii) EPA company and facility registration numbers issued under § 80.76;

(iii) Identification of a contact person; and

(iv) For petitions submitted under paragraphs (d)(1)(i) and (d)(2)(i) of this section:

(A) Revised 1990 individual baseline determination wherein the baseline for gasoline produced or imported for use in Alaska has been evaluated using the winter Complex Model, or gasoline produced or imported for use in Hawaii, and/or the Commonwealth of Puerto Rico, and/or the Virgin Islands has been evaluated using the summer Complex Model, as applicable, with the calculations clearly and fully described and displayed; and

(B) Revised 1990 individual baseline determination for gasoline in the refinery's or importer's original individual 1990 baseline which was not produced or imported for use in Alaska, and/or Hawaii, and/or the Commonwealth of Puerto Rico, and/or the Virgin Islands, as applicable, with the calculations clearly and fully described and displayed.

(C) Baseline auditor agreement with the revised baseline values.

(4) For U.S. Postal delivery, the petition shall be sent to: Attn: RFG Program, Mailstop 6406J, U.S. Environmental Protection Agency, 1200 Pennsylvania Avenue, NW., Washington, DC 20460. For commercial delivery: Attn: RFG Program, 6th Floor (202–343–9038), U.S. Environmental Protection Agency, 1310 L St., NW., Washington, DC 20005.

(5) EPA reserves the right to request additional information. If such information is not forthcoming in a timely manner, the petition will not be approved.

(6) A petition under this section may be submitted at any time during the annual averaging period. The baseline and compliance methods approved in a petition submitted under paragraph (d) of this section shall apply beginning with the annual averaging period in which the petition was approved and shall continue to apply in each annual averaging period thereafter. Once a petition has been approved under this section, the refiner or importer may not revert back to its original baseline.

(7) A refiner for any refinery or importer with an approved petition under paragraph (d)(1) of this section and an approved petition under paragraph (d)(2) of this section will be subject to a separate baseline and baseline volume for its gasoline produced or imported for use in Alaska, and a separate baseline and baseline volume for its gasoline produced or imported for use in Hawaii, the Commonwealth of Puerto Rico and the Virgin Islands.

(8)(i) Any refiner for any refinery or importer must have an approved petition under paragraph (d)(1) of this section in order to use the seasonal baseline and seasonal Complex Model, as provided in paragraph (d)(1) of this section, for gasoline produced or imported for use in Alaska.

(ii) Any refiner for any refinery or importer must have an approved petition under paragraph (d)(2) of this section in order to use the seasonal baseline and seasonal Complex Model, as provided in paragraph (d)(2) of this section, for gasoline produced or imported for use in Hawaii, the Commonwealth of Puerto Rico, and the Virgin Islands.

(iii) Any new refiner or importer without an individual anti-dumping baseline shall be subject to the annual average anti-dumping statutory baseline under § 80.91(c)(5) unless the refiner or importer petitions for and receives approval of use of a seasonal baseline and seasonal Complex Model under this section.

(9)(i) The provisions of this paragraph (d) shall apply to any refiner, for any refinery, or importer that received approval of a petition under this paragraph (d) prior to November 26, 2007 beginning with the 2008 annual averaging period.

(ii) Any refiner, for any refinery, or importer that received approval of a petition under paragraph (d) of this section prior to November 26, 2007 may petition EPA to withdraw such approval. Such petition must be submitted to EPA by December 31, 2007. A withdrawal of approval under this paragraph is effective beginning with the 2008 annual averaging period and shall remain in effect in each annual averaging period thereafter.

(iii) A refiner or importer with an approved withdrawal under paragraph (d)(9)(i) of this section will be subject to the baseline which was in effect prior to the effective date of the refiner's or importer's approved petition under this paragraph (d). Once a refiner or importer receives approval of a withdrawal of a petition under paragraph (d)(9)(i) of this section the refiner or importer is ineligible to receive approval of a change in baseline under this section.

[59 FR 7860, Feb. 16, 1994, as amended at 59 FR 36968, July 20, 1994; 60 FR 65575, Dec. 20, 1995; 64 FR 30910, June 9, 1999; 72 FR 60579, Oct. 25, 2007]

§ 80.94 Requirements for gasoline produced at foreign refineries.

(a) *Definitions.* (1) A *foreign refinery* is a refinery that is located outside the United States, including the Commonwealth of Puerto Rico, the Virgin Islands, Guam, American Samoa, and the Commonwealth of the Northern Mariana Islands (collectively referred to in this section as ''the United States'').

(2) A *foreign refiner* is a person who meets the definition of refiner under § 80.2(i) for foreign refinery.

(3) *FRGAS* means gasoline produced at a foreign refinery that has been assigned an individual refinery baseline and that is imported into the United States.

(4) *Non-FRGAS* means gasoline that is produced at a foreign refinery that has not been assigned an individual refinery baseline, gasoline produced at a foreign refinery with an individual refinery baseline that is not imported into the United States, and gasoline produced at a foreign refinery with an individual baseline during a year when the foreign refiner has opted to not participate in the FRGAS program under paragraph (c)(3) of this section.

(5) *Certified FRGAS* means FRGAS the foreign refiner intends to include in the foreign refinery's NO_X and exhaust toxics compliance calculations under § 80.101(g), and does include in these compliance calculations when reported to EPA.

(6) *Non-certified FRGAS* means FRGAS that is not certified FRGAS.

(b) *Baseline establishment.* Any foreign refiner may submit to EPA a petition for an individual refinery baseline, under §§ 80.90 through 80.93.

(1) The provisions for baselines as specified in §§ 80.90 through 80.93 shall apply to a foreign refinery, except where provided otherwise in this section.

(2) The baseline for a foreign refinery shall reflect only the volume and properties of gasoline produced in 1990 that was imported into the United States.

(3) A baseline petition shall establish the volume of conventional gasoline produced at a foreign refinery and imported into the United States during the calendar year immediately preceding the year the baseline petition is submitted.

(4) In making determinations for foreign refinery baselines EPA will consider all information supplied by a foreign refiner, and in addition may rely on any and all appropriate assumptions necessary to make such a determination.

(5) Where a foreign refiner submits a petition that is incomplete or inadequate to establish an accurate baseline, and the refiner fails to cure this defect after a request for more information, then EPA shall not assign an individual refinery baseline.

(6) Baseline petitions under this paragraph (b) of this section must be submitted before January 1, 2002.

(c) *General requirements for foreign refiners with individual refinery baselines.* Any foreign refiner of a refinery that has been assigned an individual baseline under paragraph (b) of this section shall designate all gasoline produced at the foreign refinery that is exported to the United States as either certified FRGAS or as non-certified FRGAS, except as provided in paragraph (c)(3) of this section.

(1)(i) In the case of certified FRGAS, the foreign refiner shall meet all requirements that apply to refiners under 40 CFR part 80, subparts D, E and F.

(ii) If the foreign refinery baseline is assigned, or a foreign refiner begins early use of a refinery baseline under paragraph (r) of this section, on a date other than January 1, the compliance baseline for the initial year shall be calculated under § 80.101(f) using an adjusted baseline volume, as follows:

$AV_{1990} = (D/365) \times V_{1990}$

where:

AV_{1990} = Adjusted 1990 baseline volume

D = Number of days remaining in the year, beginning with the day the foreign refinery baseline is approved or the day the foreign refiner begins early use of a refinery baseline, whichever is later

V_{1990} = Foreign refinery's 1990 baseline volume.

(2) In the case of non-certified FRGAS, the foreign refiner shall meet the following requirements, except the foreign refiner shall substitute the name ''non-certified FRGAS'' for the names ''reformulated gasoline'' or ''RBOB'' wherever they appear in the following requirements:

(i) The designation requirements in § 80.65(d)(1);

(ii) The recordkeeping requirements in § 80.74 (a), and (b)(3);

(iii) The reporting requirements in § 80.75 (a), (m), and (n);

(iv) The registration requirements in § 80.76;

(v) The product transfer document requirements in § 80.77 (a) through (f), and (j);

(vi) The prohibition in § 80.78(a)(10), (b) and (c); and

(vii) The independent audit requirements in §§ 80.125 through 80.127, 80.128 (a) through (c), and (g) through (i), and 80.130.

(3)(i) Any foreign refiner that has been assigned an individual baseline for a foreign refinery under paragraph (b) of this section may elect to classify no gasoline imported into the United States as FRGAS, provided the foreign refiner notifies EPA of the election no later than November 1 of the prior calendar year.

(ii) An election under paragraph (c)(3)(i) of this section shall:

(A) Be for an entire calendar year averaging period and apply to all gasoline produced during the calendar year at the foreign refinery that is imported into the United States; and

(B) Remain in effect for each succeeding calendar year averaging period, unless and until the foreign refiner notifies EPA of a termination of the election. The change in election shall take effect at the beginning of the next calendar year.

(iii) A foreign refiner who has aggregated refineries under § 80.101(h) shall make the same election under paragraph (c)(3)(i) of this section for all refineries in the aggregation.

(d) *Designation, product transfer documents, and foreign refiner certification.* (1) Any foreign refiner of a foreign refinery that has been assigned an individual baseline shall designate each batch of FRGAS as such at the time the gasoline is produced, unless the foreign refiner has elected to classify no gasoline exported to the United States as FRGAS under paragraph (c)(3)(i) of this section.

(2) On each occasion when any person transfers custody or title to any FRGAS prior to its being imported into the United States, the following information shall be included as part of the product transfer document information in §§ 80.77 and 80.106:

(i) Identification of the gasoline as certified FRGAS or as non-certified FRGAS; and

(ii) The name and EPA refinery registration number of the refinery where the FRGAS was produced.

(3) On each occasion when FRGAS is loaded onto a vessel or other transportation mode for transport to the United States, the foreign refiner shall prepare a certification for each batch of the FRGAS that meets the following requirements:

(i) The certification shall include the report of the independent third party under paragraph (f) of this section, and the following additional information:

(A) The name and EPA registration number of the refinery that produced the FRGAS;

(B) The identification of the gasoline as certified FRGAS or non-certified FRGAS;

(C) The volume of FRGAS being transported, in gallons;

(D) A declaration that the FRGAS is being included in the compliance baseline calculations under § 80.101(f) for the refinery that produced the FRGAS; and

(E) In the case of certified FRGAS:

(*1*) The values for each parameter required to calculate NO_X and exhaust toxics emissions performance as determined under paragraph (f) of this section; and

(*2*) A declaration that the FRGAS is being included in the compliance calculations under § 80.101(g) for the refinery that produced the FRGAS.

(ii) The certification shall be made part of the product transfer documents for the FRGAS.

(e) *Transfers of FRGAS to non-United States markets.* The foreign refiner is responsible to ensure that all gasoline classified as FRGAS is imported into the United States. A foreign refiner may remove the FRGAS classification, and the gasoline need not be imported into the United States, but only if:

(1)(i) The foreign refiner excludes:

(A) The volume of gasoline from the refinery's compliance baseline calculations under § 80.101(h); and

(B) In the case of certified FRGAS, the volume and parameter values of the gasoline from the compliance calculations under § 80.101(g);

(ii) The exclusions under paragraph (e)(1)(i) of this section shall be on the basis of the parameter and volumes determined under paragraph (f) of this section; and

(2) The foreign refiner obtains sufficient evidence in the form of documentation that the gasoline was not imported into the United States.

(f) *Load port independent sampling, testing and refinery identification.* (1) On each occasion FRGAS is loaded onto a vessel for transport to the United States a foreign refiner shall have an independent third party:

(i) Inspect the vessel prior to loading and determine the volume of any tank bottoms;

(ii) Determine the volume of FRGAS loaded onto the vessel (exclusive of any tank bottoms present before vessel loading);

(iii) Obtain the EPA-assigned registration number of the foreign refinery;

(iv) Determine the name and country of registration of the vessel used to transport the FRGAS to the United States; and

(v) Determine the date and time the vessel departs the port serving the foreign refinery.

(2) On each occasion certified FRGAS is loaded onto a vessel for transport to the United States a foreign refiner shall have an independent third party:

(i) Collect a representative sample of the certified FRGAS from each vessel compartment subsequent to loading on the vessel and prior to departure of the vessel from the port serving the foreign refinery;

(ii) Prepare a volume-weighted vessel composite sample from the compartment samples, and determine the values for sulfur, benzene, gravity, E200 and E300 using the methodologies specified in § 80.46, by:

(A) The third party analyzing the sample; or

(B) The third party observing the foreign refiner analyze the sample;

(iii) Determine the values for aromatics, olefins, RVP and each oxygenate specified in § 80.65(e)(2) for the gasoline loaded onto the vessel, by:

(A) Completing the analysis procedures under paragraph (f)(2)(ii) of this section for the additional parameters; or

(B) Obtaining from the foreign refiner the test results of samples collected from each shore tank containing gasoline that was loaded onto the vessel, and calculating the parameter values for the gasoline loaded onto the vessel from the tank parameter values and the gasoline volume from each such shore tank that was loaded;

(iv) Review original documents that reflect movement and storage of the certified FRGAS from the refinery to the load port, and from this review determine:

(A) The refinery at which the FRGAS was produced; and

(B) That the FRGAS remained segregated from:

(*1*) Non-FRGAS and non-certified FRGAS; and

(*2*) Other certified FRGAS produced at a different refinery, except that certified FRGAS may be combined with other certified FRGAS produced at refineries that are aggregated under § 80.101(h);

(3) The independent third party shall submit a report:

(i) To the foreign refiner containing the information required under paragraphs (f) (1) and (2) of this section, to accompany the product transfer documents for the vessel; and

(ii) To the Administrator containing the information required under paragraphs (f) (1) and (2) of this section, within thirty days following the date of the independent third party's inspection. This report shall include a description of the method used to determine the identity of the refinery at which the gasoline was produced, that the gasoline remained segregated as specified in paragraph (n)(1) of this section, and a description of the gasoline's movement and storage between production at the source refinery and vessel loading.

(4) A person may be used to meet the third party requirements in this paragraph (f) only if:

(i) The person is approved in advance by EPA, based on a demonstration of ability to perform the procedures required in this paragraph (f);

(ii) The person is independent under the criteria specified in § 80.65(f)(2)(iii); and

(iii) The person signs a commitment that contains the provisions specified in paragraph (i) of this section with regard to activities, facilities and documents relevant to compliance with the requirements of this paragraph (f).

(g) *Comparison of load port and port of entry testing.* (1)(i) Any foreign refiner and any United States importer of certified FRGAS shall compare the results from the load port testing under paragraph (f) of this section, with the port of entry testing as reported under paragraph (o) of this section, for the volume of gasoline, for the parameter values for sulfur, benzene, gravity, E200 and E300, and for the NO_X and exhaust toxics emissions performance; except that

(ii) Where a vessel transporting certified FRGAS off loads this gasoline at more than one United States port of entry, and the conditions of paragraph (g)(2)(i) of this section are not met at the first United States port of entry, the requirements of paragraph (g)(1) and (g)(2) of this section do not apply at subsequent ports of entry if the United States importer obtains a certification from the vessel owner or his immediate designee that the vessel has not loaded any gasoline or blendstock between the first United States port of entry and the subsequent port of entry.

(2)(i) The requirements of paragraph (g)(2)(ii) apply if:

(A)(*1*) The temperature-corrected volumes determined at the port of entry and at the load port differ by more than one percent; or

(*2*) For any parameter specified in paragraph (f)(2)(ii) of this section, the values determined at the port of entry and at the load port differ by more than the reproducibility amount specified for the port of entry test result by the American Society of Testing and Materials (ASTM); unless

(B) The NO_X and exhaust toxics emissions performance, in grams per mile, calculated using the port of entry test results, are each equal to or less than the NO_X and exhaust toxics emissions performance calculated using the load port test results;

(ii) The United States importer and the foreign refiner shall treat the gasoline as non-certified FRGAS, and the foreign refiner shall:

(A) Exclude the gasoline volume and properties from its conventional gasoline NO_X and exhaust toxics compliance calculations under § 80.101(g); and

(B) Include the gasoline volume in its compliance baseline calculation under § 80.101(f), unless the foreign refiner establishes that the United States importer classified the gasoline only as conventional gasoline and not as reformulated gasoline.

(h) *Attest requirements.* The following additional procedures shall be carried out by any foreign refiner of FRGAS as part of the attest engagement for each foreign refinery under 40 CFR part 80, subpart F.

(1) Include in the inventory reconciliation analysis under § 80.128(b) and the tender analysis under § 80.128(c) non-FRGAS in addition to the gasoline types listed in § 80.128 (b) and (c).

(2) Obtain separate listings of all tenders of certified FRGAS, and of non-certified FRGAS. Agree the total volume of tenders from the listings to the gasoline inventory reconciliation analysis in § 80.128(b), and to the volumes determined by the third party under paragraph (f)(1) of this section.

(3) For each tender under paragraph (h)(2) of this section where the gasoline is loaded onto a marine vessel, report as a finding the name and country of

registration of each vessel, and the volumes of FRGAS loaded onto each vessel.

(4) Select a sample from the list of vessels identified in paragraph (h)(3) of this section used to transport certified FRGAS, in accordance with the guidelines in § 80.127, and for each vessel selected perform the following:

(i) Obtain the report of the independent third party, under paragraph (f) of this section, and of the United States importer under paragraph (o) of this section.

(A) Agree the information in these reports with regard to vessel identification, gasoline volumes and test results.

(B) Identify, and report as a finding, each occasion the load port and port of entry parameter and volume results differ by more than the amounts allowed in paragraph (g) of this section, and determine whether the foreign refiner adjusted its refinery calculations as required in paragraph (g) of this section.

(ii) Obtain the documents used by the independent third party to determine transportation and storage of the certified FRGAS from the refinery to the load port, under paragraph (f) of this section. Obtain tank activity records for any storage tank where the certified FRGAS is stored, and pipeline activity records for any pipeline used to transport the certified FRGAS, prior to being loaded onto the vessel. Use these records to determine whether the certified FRGAS was produced at the refinery that is the subject of the attest engagement, and whether the certified FRGAS was mixed with any non-certified FRGAS, non-FRGAS, or any certified FRGAS produced at a different refinery that was not aggregated under § 80.101(h).

(5)(i) Select a sample from the list of vessels identified in paragraph (h)(3) of this section used to transport certified and non-certified FRGAS, in accordance with the guidelines in § 80.127, and for each vessel selected perform the following:

(ii) Obtain a commercial document of general circulation that lists vessel arrivals and departures, and that includes the port and date of departure of the vessel, and the port of entry and date of arrival of the vessel. Agree the vessel's departure and arrival locations and dates from the independent third party and United States importer reports to the information contained in the commercial document.

(6) Obtain separate listings of all tenders of non-FRGAS, and perform the following:

(i) Agree the total volume of tenders from the listings to the gasoline inventory reconciliation analysis in § 80.128(b).

(ii) Obtain a separate listing of the tenders under paragraph (h)(6) of this section where the gasoline is loaded onto a marine vessel. Select a sample from this listing in accordance with the guidelines in § 80.127, and obtain a commercial document of general circulation that lists vessel arrivals and departures, and that includes the port and date of departure and the ports and dates where the gasoline was off loaded for the selected vessels. Determine and report as a finding the country where the gasoline was off loaded for each vessel selected.

(7) In order to complete the requirements of this paragraph (h) an auditor shall:

(i) Be independent of the foreign refiner;

(ii) Be licensed as a Certified Public Accountant in the United States and a citizen of the United States, or be approved in advance by EPA based on a demonstration of ability to perform the procedures required in §§ 80.125 through 80.130 and this paragraph (h); and

(iii) Sign a commitment that contains the provisions specified in paragraph (i) of this section with regard to activities and documents relevant to compliance with the requirements of §§ 80.125 through 80.130 and this paragraph (h).

(i) *Foreign refiner commitments.* Any foreign refiner shall commit to and comply with the provisions contained in this paragraph (i) as a condition to being assigned an individual refinery baseline.

(1) Any United States Environmental Protection Agency inspector or auditor will be given full, complete and immediate access to conduct inspections and audits of the foreign refinery.

(i) Inspections and audits may be either announced in advance by EPA, or unannounced.

(ii) Access will be provided to any location where:

(A) Gasoline is produced;

(B) Documents related to refinery operations are kept;

(C) Gasoline or blendstock samples are tested or stored; and

(D) FRGAS is stored or transported between the foreign refinery and the United States, including storage tanks, vessels and pipelines.

(iii) Inspections and audits may be by EPA employees or contractors to EPA.

(iv) Any documents requested that are related to matters covered by inspections and audits will be provided to an EPA inspector or auditor on request.

(v) Inspections and audits by EPA may include review and copying of any documents related to:

(A) Refinery baseline establishment, including the volume and parameters, and transfers of title or custody, of any gasoline or blendstocks, whether FRGAS or non-FRGAS, produced at the foreign refinery during the period January 1, 1990 through the date of the refinery baseline petition or through the date of the inspection or audit if a baseline petition has not been approved, and any work papers related to refinery baseline establishment;

(B) The parameters and volume of FRGAS;

(C) The proper classification of gasoline as being FRGAS or as not being FRGAS, or as certified FRGAS or as non-certified FRGAS;

(D) Transfers of title or custody to FRGAS;

(E) Sampling and testing of FRGAS;

(F) Work performed and reports prepared by independent third parties and by independent auditors under the requirements of this section, including work papers; and

(G) Reports prepared for submission to EPA, and any work papers related to such reports.

(vi) Inspections and audits by EPA may include taking samples of gasoline or blendstock, and interviewing employees.

(vii) Any employee of the foreign refiner will be made available for interview by the EPA inspector or auditor, on request, within a reasonable time period.

(viii) English language translations of any documents will be provided to an EPA inspector or auditor, on request, within 10 working days.

(ix) English language interpreters will be provided to accompany EPA inspectors and auditors, on request.

(2) An agent for service of process located in the District of Columbia will be named, and service on this agent constitutes service on the foreign refiner or any officer, or employee of the foreign refiner for any action by EPA or otherwise by the United States related to the requirements of 40 CFR part 80, subparts D, E and F.

(3) The forum for any civil or criminal enforcement action related to the provisions of this section for violations of the Clean Air Act or regulations promulgated thereunder shall be governed by the Clean Air Act, including the EPA administrative forum where allowed under the Clean Air Act.

(4) United States substantive and procedural laws shall apply to any civil or criminal enforcement action against the foreign refiner or any employee of the foreign refiner related to the provisions of this section.

(5) Submitting a petition for an individual refinery baseline, producing and exporting gasoline under an individual refinery baseline, and all other actions to comply with the requirements of 40 CFR part 80, subparts D, E and F relating to the establishment and use of an individual refinery baseline constitute actions or activities covered by and within the meaning of 28 U.S.C. 1605(a)(2), but solely with respect to actions instituted against the foreign refiner, its agents, officers, and employees in any court or other tribunal in the United States for conduct that violates the requirements applicable to the foreign refiner under 40 CFR part 80, subparts D, E and F, including such conduct that violates Title 18 U.S.C. section 1001, Clean Air Act section 113(c)(2), or other applicable provisions of the Clean Air Act.

(6) The foreign refiner, or its agents, officers, or employees, will not seek to detain or to impose civil or criminal remedies against EPA inspectors or

auditors, whether EPA employees or EPA contractors, for actions performed within the scope of EPA employment related to the provisions of this section.

(7) The commitment required by this paragraph (i) shall be signed by the owner or president of the foreign refiner business.

(8) In any case where FRGAS produced at a foreign refinery is stored or transported by another company between the refinery and the vessel that transports the FRGAS to the United States, the foreign refiner shall obtain from each such other company a commitment that meets the requirements specified in paragraphs (i) (1) through (7) of this section, and these commitments shall be included in the foreign refiner's baseline petition.

(j) *Sovereign immunity*. By submitting a petition for an individual foreign refinery baseline under this section, or by producing and exporting gasoline to the United States under an individual refinery baseline under this section, the foreign refiner, its agents, officers, and employees, without exception, become subject to the full operation of the administrative and judicial enforcement powers and provisions of the United States without limitation based on sovereign immunity, with respect to actions instituted against the foreign refiner, its agents, officers, and employees in any court or other tribunal in the United States for conduct that violates the requirements applicable to the foreign refiner under 40 CFR part 80, subparts D, E and F, including such conduct that violates Title 18 U.S.C. section 1001, Clean Air Act section 113(c)(2), or other applicable provisions of the Clean Air Act.

(k) *Bond posting*. Any foreign refiner shall meet the requirements of this paragraph (k) as a condition to being assigned an individual refinery baseline.

(1) The foreign refiner shall post a bond of the amount calculated using the following equation:

$$\text{Bond} = G \times \$0.01$$

where:

Bond = amount of the bond in U.S. dollars

G = the largest volume of conventional gasoline produced at the foreign refinery and exported to the United States, in gallons, during a single calendar year among the most recent of the following calendar years, up to a maximum of five calendar years: the calendar year immediately preceding the date the baseline petition is submitted, the calendar year the baseline petition is submitted, and each succeeding calendar year

(2) Bonds shall be posted by:

(i) Paying the amount of the bond to the Treasurer of the United States;

(ii) Obtaining a bond in the proper amount from a third party surety agent that is payable to satisfy United States judicial judgments against the foreign refiner, provided EPA agrees in advance as to the third party and the nature of the surety agreement; or

(iii) An alternative commitment that results in assets of an appropriate liquidity and value being readily available to the United States, provided EPA agrees in advance as to the alternative commitment.

(3) If the bond amount for a foreign refinery increases the foreign refiner shall increase the bond to cover the shortfall within 90 days of the date the bond amount changes. If the bond amount decreases, the foreign refiner may reduce the amount of the bond beginning 90 days after the date the bond amount changes.

(4) Bonds posted under this paragraph (k) shall be used to satisfy any judicial judgment that results from an administrative or judicial enforcement action for conduct in violation of 40 CFR part 80, subparts D, E and F, including such conduct that violates Title 18 U.S.C. section 1001, Clean Air Act section 113(c)(2), or other applicable provisions of the Clean Air Act.

(5) On any occasion a foreign refiner bond is used to satisfy any judgment, the foreign refiner shall increase the bond to cover the amount used within 90 days of the date the bond is used.

(l) *Blendstock tracking*. For purposes of blendstock tracking by any foreign refiner under § 80.102 by a foreign refiner with an individual refinery baseline, the foreign refiner may exclude from the calculations required in § 80.102(d) the volume of applicable blendstocks for which the foreign refiner has sufficient evidence in the form of documentation that the blendstocks were used to produce gasoline used outside the United States.

(m) *English language reports.* Any report or other document submitted to EPA by any foreign refiner shall be in the English language, or shall include an English language translation.

(n) *Prohibitions.* (1) No person may combine certified FRGAS with any non-certified FRGAS or non-FRGAS, and no person may combine certified FRGAS with any certified FRGAS produced at a different refinery that is not aggregated under § 80.101(h), except as provided in paragraph (e) of this section.

(2) No foreign refiner or other person may cause another person to commit an action prohibited in paragraph (n)(1) of this section, or that otherwise violates the requirements of this section.

(o) *United States importer requirements.* Any United States importer shall meet the following requirements.

(1) Each batch of imported gasoline shall be classified by the importer as being FRGAS or as non-FRGAS, and each batch classified as FRGAS shall be further classified as certified FRGAS or as non-certified FRGAS.

(2) Gasoline shall be classified as certified FRGAS or as non-certified FRGAS according to the designation by the foreign refiner if this designation is supported by product transfer documents prepared by the foreign refiner as required in paragraph (d) of this section, unless the gasoline is classified as non-certified FRGAS under paragraph (g) of this section.

(3) For each gasoline batch classified as FRGAS, any United States importer shall perform the following procedures.

(i) In the case of both certified and non-certified FRGAS, have an independent third party:

(A) Determine the volume of gasoline in the vessel;

(B) Use the foreign refiner's FRGAS certification to determine the name and EPA-assigned registration number of the foreign refinery that produced the FRGAS;

(C) Determine the name and country of registration of the vessel used to transport the FRGAS to the United States; and

(D) Determine the date and time the vessel arrives at the United States port of entry.

(ii) In the case of certified FRGAS, have an independent third party:

(A) Collect a representative sample from each vessel compartment subsequent to the vessel's arrival at the United States port of entry and prior to off loading any gasoline from the vessel;

(B) Prepare a volume-weighted vessel composite sample from the compartment samples; and

(C) Determine the values for sulfur, benzene, gravity, E200 and E300 using the methodologies specified in § 80.46, by:

(*1*) The third party analyzing the sample; or

(*2*) The third party observing the importer analyze the sample

(4) Any importer shall submit reports within thirty days following the date any vessel transporting FRGAS arrives at the United States port of entry:

(i) To the Administrator containing the information determined under paragraph (o)(3) of this section; and

(ii) To the foreign refiner containing the information determined under paragraph (o)(3)(ii) of this section.

(5)(i) Any United States importer shall meet the requirements specified for conventional gasoline in § 80.101 for any imported conventional gasoline that is not classified as certified FRGAS under paragraph (o)(2) of this section.

(ii) The baseline applicable to a United States importer who has not been assigned an individual importer baseline under § 80.91(b)(4) shall be the baseline specified in paragraph (p) of this section.

(p) *Importer Baseline.* (1) Each calendar year starting in 2000, the Administrator shall calculate the volume weighted average NO_X emissions of imported conventional gasoline for a multi-year period (MYA_{NOx}). This calculation:

(i) Shall use the Phase II Complex Model;

(ii) Shall include all conventional gasoline in the following categories:

(A) Imported conventional gasoline that is classified as conventional gasoline, and included in the conventional gasoline compliance calculations of importers for each year; and

(B) Imported conventional gasoline that is classified as certified FRGAS, and included in the conventional gasoline compliance calculations of foreign refiners for each year;

(iii)(A) In 2000 only, shall be for the 1998 and 1999 averaging periods and also shall include all conventional gasoline classified as FRGAS and included in the conventional gasoline compliance calculations of a foreign refiner for 1997, and all conventional gasoline batches not classified as FRGAS that are imported during 1997 beginning on the date the first batch of FRGAS arrives at a United States port of entry; and

(B) Starting in 2001, shall include imported conventional gasoline during the prior three calendar year averaging periods.

(2)(i) If the volume-weighted average NO_X emissions (MYA_{NOx}), calculated in paragraph (p)(1) of this section, is greater than 1,465 mg/mile, the Administrator shall calculate an adjusted baseline for NO_X according to the following equation:

$$AB_{NOx} = 1{,}465 \text{ mg/mile} - (MYA_{NOx} - 1{,}465 \text{ mg/mile})$$

where:

AB_{NOx} = Adjusted NO_X baseline, in mg/mile
MYA_{NOx} = Multi-year average NO_X emissions, in mg/mile

(ii) For the 1998 and 1999 multi-year averaging period only the value of AB_{NOx} shall not be larger than 1,480 mg/mile regardless of the calculation under paragraph (p)(2)(i) of this section.

(3)(i) Notwithstanding the provisions of § 80.91(b)(4)(iii), the baseline NO_X emissions values applicable to any United States importer who has not been assigned an individual importer baseline under § 80.91(b)(4) shall be the more stringent of the statutory baseline value for NO_X under § 80.91(c)(5), or the adjusted NO_X baseline calculated in paragraph (p)(2) of this section.

(ii) On or before June 1 of each calendar year, the Administrator shall announce the NO_X baseline that applies to importers under this paragraph (p). If the baseline is an adjusted baseline, it shall be effective for any conventional gasoline imported beginning 60 days following the Administrator's announcement. If the baseline is the statutory baseline, it shall be effective upon announcement. A baseline shall remain in effect until the effective date of a subsequent change to the baseline pursuant to this paragraph (p).

(q) *Withdrawal or suspension of a foreign refinery's baseline.* EPA may withdraw or suspend a baseline that has been assigned to a foreign refinery where:

(1) A foreign refiner fails to meet any requirement of this section;

(2) A foreign government fails to allow EPA inspections as provided in paragraph (i)(1) of this section;

(3) A foreign refiner asserts a claim of, or a right to claim, sovereign immunity in an action to enforce the requirements in 40 CFR part 80, subparts D, E and F; or

(4) A foreign refiner fails to pay a civil or criminal penalty that is not satisfied using the foreign refiner bond specified in paragraph (k) of this section.

(r) *Early use of a foreign refinery baseline.* (1) A foreign refiner may begin using an individual refinery baseline before EPA has approved the baseline, provided that:

(i) A baseline petition has been submitted as required in paragraph (b) of this section;

(ii) EPA has made a provisional finding that the baseline petition is complete;

(iii) The foreign refiner has made the commitments required in paragraph (i) of this section;

(iv) The persons who will meet the independent third party and independent attest requirements for the foreign refinery have made the commitments required in paragraphs (f)(3)(iii) and (h)(7)(iii) of this section; and

(v) The foreign refiner has met the bond requirements of paragraph (k) of this section.

(2) In any case where a foreign refiner uses an individual refinery baseline before final approval under paragraph (r)(1) of this section, and the foreign refinery baseline values that ultimately are approved by EPA are more stringent than the early baseline values used by the foreign refiner, the foreign

refiner shall recalculate its compliance, *ab initio*, using the baseline values approved by EPA, and the foreign refiner shall be liable for any resulting violation of the conventional gasoline requirements.

(s) *Additional requirements for petitions, reports and certificates.* Any petition for a refinery baseline under paragraph (b) of this section, any report or other submission required by paragraphs (c), (f)(2), or (i) of this section, and any certification under paragraph (d)(3) or (g)(1)(ii) of this section shall be:

(1) Submitted in accordance with procedures specified by the Administrator, including use of any forms that may specified by the Administrator.

(2) Be signed by the president or owner of the foreign refiner company, or in the case of (g)(1)(ii) the vessel owner, or by that person's immediate designee, and shall contain the following declaration:

I hereby certify: (1) that I have actual authority to sign on behalf of and to bind [insert name of foreign refiner or vessel owner] with regard to all statements contained herein; (2) that I am aware that the information contained herein is being certified, or submitted to the United States Environmental Protection Agency, under the requirements of 40 CFR part 80, subparts D, E and F and that the information is material for determining compliance under these regulations; and (3) that I have read and understand the information being certified or submitted, and this information is true, complete and correct to the best of my knowledge and belief after I have taken reasonable and appropriate steps to verify the accuracy thereof.

I affirm that I have read and understand that the provisions of 40 CFR part 80, subparts D, E and F, including 40 CFR 80.94 (i), (j) and (k), apply to [insert name of foreign refiner or vessel owner]. Pursuant to Clean Air Act section 113(c) and Title 18, United States Code, section 1001, the penalty for furnishing false, incomplete or misleading information in this certification or submission is a fine of up to $10,000, and/or imprisonment for up to five years.

[62 FR 45563, Aug. 28, 1997]

§§ 80.95–80.100 [Reserved]

§ 80.101 Standards applicable to refiners and importers.

Any refiner or importer of conventional gasoline shall meet the standards specified in this section over the specified averaging period, beginning on January 1, 1995.

(a) *Averaging period.* The averaging period for the standards specified in this section shall be January 1 through December 31, except as provided in paragraphs (k) and (l) of this section.

(b) *Conventional gasoline compliance standards*—(1) *Simple model standards.* The simple model standards are the following:

(i) Annual average exhaust benzene emissions, calculated according to paragraph (g)(1)(i) of this section, shall not exceed the refiner's or importer's compliance baseline for exhaust benzene emissions;

(ii) Annual average levels of sulfur shall not exceed 125% of the refiner's or importer's compliance baseline for sulfur;

(iii) Annual average levels of olefins shall not exceed 125% of the refiner's or importer's compliance baseline for olefins; and

(iv) Annual average values of T–90 shall not exceed 125% of the refiner's or importer's compliance baseline for T–90.

(2) *Optional complex model standards.* Annual average levels of exhaust benzene emissions, weighted by volume for each batch and calculated using the applicable complex model under § 80.45, shall not exceed the refiner's or importer's 1990 average exhaust benzene emissions.

(3) *Complex model standards.* (i) Annual average levels of exhaust toxics emissions and NO_X emissions, weighted by volume for each batch and calculated using the applicable complex model under § 80.45, shall not exceed the refiner's or importer's compliance baseline for exhaust toxics and NO_X emissions, respectively.

(ii) Annual average levels of RVP, benzene, aromatics, olefins, sulfur, E200 and E300 shall not be greater than the conventional gasoline complex model valid range limits for the parameter under § 80.45(f)(1)(ii), or the refiner or importer's annual 1990 baseline for the parameter if outside the valid range limit, whichever is greater.

(c) *Applicability of standards.* (1) For each averaging period prior to January 1, 1998, a refiner or importer shall be

subject to either the Simple Model or Optional Complex Model Standards, at their option, except that any refiner or importer shall be subject to:

(i) The Simple Model Standards if the refiner or importer uses the Simple Model Standards for reformulated gasoline; or

(ii) The Optional Complex Model Standards if the refiner or importer used the Complex Model Standards for reformulated gasoline.

(2) Beginning January 1, 1998, each refiner and importer shall be subject to the Complex Model Standards for each averaging period.

(3)(i) The NO_X emissions standard specified in paragraph (b)(3)(i) of this section shall no longer apply beginning January 1, 2007, except as provided in paragraph (c)(3)(ii) of this section.

(ii) For a refiner subject to the small refiner gasoline sulfur standards at § 80.240, the NO_X emissions standard specified in paragraph (b)(3)(i) of this section shall no longer apply beginning January 1, 2008. For a refiner subject to the gasoline sulfur standards at § 80.240 that has received an extension of its small refiner gasoline sulfur standards under § 80.553, the NO_X emissions standard specified in paragraph (b)(3)(i) of this section shall no longer apply beginning January 1, 2011.

(4)(i) Beginning January 1, 2011, or January 1, 2015 for small refiners approved under § 80.1340, the exhaust toxics emissions standard specified in paragraph (b)(3)(i) of this section shall apply only to conventional gasoline that is not subject to the benzene standard of § 80.1230, pursuant to the provisions of § 80.1235.

(ii) The exhaust toxic emissions standard specified in paragraph (b)(3)(i) of this section shall not apply to conventional gasoline produced by a refinery approved under § 80.1334, pursuant to § 80.1334(c).

(d) *Product to which standards apply.* Any refiner for each refinery, or any importer, shall include in its compliance calculations:

(1) Any conventional gasoline produced or imported during the averaging period;

(2) [Reserved]

(3) Any gasoline blending stock produced or imported during the averaging period which becomes conventional gasoline solely upon the addition of oxygenate;

(4)(i) Any oxygenate that is added to conventional gasoline, or gasoline blending stock as described in paragraph (d)(3) of this section, where such gasoline or gasoline blending stock is produced or imported during the averaging period;

(ii) In the case of oxygenate that is added at a point downstream of the refinery or import facility, the oxygenate may be included only if the refiner or importer can establish the oxygenate was in fact added to the gasoline or gasoline blendstock produced, by showing that the oxygenate was added by:

(A) The refiner or importer; or

(B) By a person other than the refiner or importer, provided that the refiner or importer:

(*1*) Has a contract with the oxygenate blender that specifies procedures to be followed by the oxygenate blender that are reasonably calculated to ensure blending with the amount and type of oxygenate claimed by the refiner or importer; and

(*2*) Monitors the oxygenate blending operation to ensure the volume and type of oxygenate claimed by the refiner or importer is correct, through periodic audits of the oxygenate blender designed to assess whether the overall volumes and type of oxygenate purchased and used by the oxygenate blender are consistent with the oxygenate claimed by the refiner or importer and that this oxygenate was blended with the refiner's or importer's gasoline or blending stock, periodic sampling and testing of the gasoline produced subsequent to oxygenate blending, and periodic inspections to ensure the contractual requirements imposed by the refiner or importer on the oxygenate blender are being met.

(e) *Product to which standards do not apply.* Any refiner for each refinery, or any importer, shall exclude from its compliance calculations:

(1) Gasoline that was not produced at the refinery or was not imported by the importer;

(2) [Reserved]

(3) California gasoline as defined in § 80.81(a)(2); and

(4) Gasoline that is exported.

(f) *Compliance baseline determinations.* (1) In the case of any refiner or importer for whom an individual baseline has been established under § 80.91, the individual baseline for each parameter or emissions performance shall be the compliance baseline for that refiner or importer.

(2)(i) In the case of any refiner for any refinery or importer for whom the anti-dumping statutory baseline applies under § 80.91, the anti-dumping statutory baseline for each parameter or emissions performance shall be the compliance baseline for that refinery or importer.

(ii) In the case of any refiner for any refinery or importer that has received approval of a petition submitted under § 80.93(d)(1)(iii), the compliance baseline for each emissions performance for that refinery or importer for gasoline produced or imported for use in Alaska shall be the winter statutory baseline value under § 80.45(b)(3), Table 5.

(iii) In the case of any refiner for any refinery or importer that has received approval of a petition submitted under § 80.93(d)(2)(iii), the compliance baseline for each emissions performance for that refinery or importer for gasoline produced or imported for use in Hawaii, the Commonwealth of Puerto Rico, and/or the Virgin Islands shall be:

(A) The summer statutory baseline value under § 80.45(b)(3), Table 5 for NO_X.

(B) The summer statutory baseline value under § 80.45(b)(3), Table 5 for Toxics less the corresponding value for Benzene under § 80.45(b)(3), Table 4.

(3)(i) In the case of any refiner for any refinery or importer that has received approval of a petition submitted under § 80.93(d)(1)(ii), the compliance baseline for each emissions performance for that refinery or importer for gasoline produced or imported for use in Alaska shall be the refinery's or importer's winter baseline value determined under § 80.91.

(ii) In the case of any refiner for any refinery or importer that has received approval of a petition submitted under § 80.93(d)(2)(ii), the compliance baseline for each emissions performance for that refinery or importer for gasoline produced or imported for use in Hawaii, the Commonwealth of Puerto Rico, and/or the Virgin Islands shall be the refinery's or importer's summer baseline value determined under § 80.91.

(4) Any compliance baseline under paragraph (f)(1) of this section shall be adjusted for each averaging period as follows:

(i) If the total volume of the conventional gasoline, RBOB, reformulated gasoline, and California gasoline as defined in § 80.81(a)(2), produced or imported by any refiner or importer during the averaging period is equal to or less than that refiner's or importer's 1990 baseline volume as determined under § 80.91(f)(1), the compliance baseline for each parameter or emissions performance shall be that refiner's or importer's individual 1990 baseline; or

(ii) If the total volume of the conventional gasoline, RBOB, reformulated gasoline, and California gasoline as defined in § 80.81(a)(2), produced or imported by any refiner or importer during the averaging period is greater than that refiner's or importer's 1990 baseline volume as determined under § 80.91(f)(1), the compliance baseline for each parameter or emissions performance shall be calculated according to the following formula:

$$CB_i = \left(B_i * \left(\frac{V_{1990}}{V_a}\right)\right) + \left(DB_i * \left(1 - \frac{V_{1990}}{V_a}\right)\right)$$

Where:

CB_i = The compliance baseline value for parameter or emissions performance i.

B_i = The refiner's or importer's individual baseline value for parameter or emission performance i calculated according to the methodology in § 80.91.

DB_i = The anti-dumping statutory baseline value for parameter or emissions performance i, as specified at § 80.91(c)(5)(iii) or (c)(5)(iv), respectively.

V_{1990} = The 1990 baseline volume as determined under § 80.91(f)(1).

V_a = The total volume of reformulated gasoline, conventional gasoline, RBOB, and California gasoline as defined in § 80.81(a)(2) produced or imported by a refiner or importer during the averaging period.

(iii) Any refiner or importer with an individual baseline that has received approval of a petition submitted under § 80.93(d) and has produced or imported gasoline for use in Alaska, Hawaii, the Commonwealth of Puerto Rico, or the Virgin Islands must calculate the compliance baseline for each parameter or emissions performance as follows:

$$CB_i \frac{CB_{i,1} \times V_1 + CB_{i,2} \times V_2 + CB_{i,3} \times (V_3 - V_r)}{(V_1 + V_2 + V_3 - V_r)}$$

If $V_j \geq V_{1990j} > 0$:

$$CB_{i,j} = B_{i,j} \times \left(\frac{V_{1990j}}{V_j} \right) + DB_{i,j} \times \left(1 - \frac{V_{1990j}}{V_j} \right)$$

If $V_j < V_{1990j}$ or $V_{1990j} = 0$: $CB_{i,j} = B_{i,j}$

Where:

CB_i = The compliance baseline for parameter or emissions performance i

$CB_{i,j}$ = The compliance baseline for parameter or emissions performance i applicable to the conventional gasoline in production volume V_j

j is a subscript identifying a portion of gasoline and RBOB produced or imported as follows:

j=1: Conventional gasoline supplied to Hawaii, the Commonwealth of Puerto Rico and the Virgin Islands, if gasoline supplied to these areas is covered by a petition for a separate baseline.

j=2: Conventional gasoline supplied to Alaska, if gasoline supplied to this area is covered by a petition for a separate baseline.

j=3: Conventional gasoline, reformulated gasoline, RBOB and California gasoline produced or imported by a refiner or importer, and not included in portions 1 or 2.

V_j = The averaging period volume for portion j.

V_r = The volume of reformulated gasoline, RBOB and California gasoline included in V_3.

$B_{i,j}$ = The refiner/importer's individual baseline for parameter or emissions performance i applicable to the conventional gasoline in portion j, or the applicable statutory baseline if assigned in lieu of an individual baseline.

$DB_{i,j}$ = The statutory baseline for parameter or emissions performance i applicable to the conventional gasoline in portion j (i.e., the annual or seasonal statutory baseline).

V_{1990j} = The 1990 baseline volume applicable to portion j.

(g) *Compliance calculations*—(1)(i) *Simple model calculations*. In the case of any refiner or importer subject to an individual refinery baseline, the annual average value for each parameter or emissions performance during the averaging period, calculated according to the following methodologies, shall be less than or equal to the refiner's or importer's standard under paragraph (b) of this section for that parameter.

(A) The average value for sulfur, T–90, olefin, benzene, and aromatics for an averaging period shall be calculated as follows:

$$APARM = \left(\frac{\sum_{i=1}^{n} (V_i \times PARM_i \times SG_i)}{\sum_{i=1}^{n} V_i \times SG_i} \right)$$

where

APARM = the average value for the parameter being evaluated

V_i = the volume of conventional gasoline or other products included under paragraph (d) of this section, in batch i

$PARM_i$ = the value of the parameter being evaluated for batch i as determined in accordance with the test methods specified in § 80.46

n = the number of batches of conventional gasoline and other products included under paragraph (d) of this section produced or imported during the averaging period

SG_i = specific gravity of batch i (only applicable for sulfur)

(B) Exhaust benzene emissions under the Simple Model for an averaging period are calculated as follows:

$$EXHBEN = 1.884 + (0.949 \times BZ) + (0.113 \times (AR - BZ))$$

where

EXHBEN = the average exhaust benzene emissions for the averaging period

BZ = the average benzene content for the averaging period, calculated per paragraph (g)(1)(i)(A) of this section

AR = the average aromatics content for the averaging period, calculated per paragraph (g)(1)(i)(A) of this section

(ii) Complex Model calculations.

(A) Exhaust benzene, exhaust toxics, and exhaust NO_X emissions performance for each batch shall be calculated in accordance with the applicable model under § 80.45.

(B) Any refiner for any refinery or importer that has received EPA approval of a petition submitted in accordance with the provisions of § 80.93(d)(1) must use the applicable winter complex model under § 80.45, using an RVP of 8.7 psi, to evaluate its averaging period gasoline produced or imported for use in Alaska.

(C) Any refiner for any refinery or importer that has received EPA approval of a petition submitted in accordance with the provisions of § 80.93(d)(2) must use the applicable summer complex model under § 80.45 to evaluate its averaging period gasoline produced or imported for use in Hawaii, the Commonwealth of Puerto Rico, and the Virgin Islands.

(2) In the case of any refiner or importer subject to the anti-dumping statutory baseline, the summer statutory baseline and/or the winter statutory baseline, the refiner or importer shall determine compliance using the following methodology:

(i) Calculate the compliance total for the averaging period for sulfur, T–90, olefins, exhaust benzene emissions, exhaust toxics and exhaust NO_X emissions, as applicable, based upon the anti-dumping statutory baseline value, the summer statutory baseline value, or the winter statutory baseline value, as applicable, for that parameter using the formula specified at 80.67.

(ii) Calculate the actual total for the averaging period for sulfur, T–90, olefins, exhaust benzene emissions, exhaust toxics and exhaust NO_X emissions, as applicable, based upon the value of the parameter for each batch of conventional gasoline and gasoline blendstocks, if applicable, using the formula specified at § 80.67.

(iii) The actual total for exhaust benzene emissions, exhaust toxics and exhaust NO_X emissions, shall not exceed the compliance total, and the actual totals for sulfur, olefins and T–90 shall not exceed 125% of the compliance totals, as required under the applicable model.

(3) Exhaust toxics and NO_X emissions performance of a blendstock batch shall be determined as follows:

(i) Determine the volume and properties of the blendstock.

(ii) Determine the blendstock volume fraction (F) based on the volume of blendstock, and the volume of gasoline with which the blendstock is blended, using the following equation:

$$F = \frac{V_b}{V_b + V_g}$$

where:

F = blendstock volume fraction

V_b = volume of blendstock

V_g = volume of gasoline with which the blendstock is blended

(iii) For each parameter required by the complex model, calculate the parameter value that would result by combining, at the blendstock volume fraction (F), the blendstock with a gasoline having properties equal to the refinery's or importer's baseline, using the following formula:

$$CP_j = \frac{\left(BAP_j \times V_g\right) + \left(BLP_j \times V_b\right)}{V_g + V_b}$$

where:

CP_j = calculated value for parameter j
BAP_j = baseline value for parameter j
BLP_j = value of parameter j for the blendstock or oxygenate
$_j$ = each parameter required by the complex model

(A) The baseline value shall be the refinery's ''summer'' or ''winter'' baseline, based on the ''summer'' or ''winter'' classification of the gasoline produced as determined under paragraphs (g)(5) or (g)(6) of this section. In the case of a refinery that is aggregated under paragraph (h) of this section, the refinery baseline shall be used, and not the aggregate baseline.

(B) The sulfur content and oxygen wt% computations under paragraph (g)(3)(iii) of this section shall be adjusted for the specific gravity of the gasoline and blendstock using specific gravities of 0.749 for ''summer'' gasoline and of 0.738 for ''winter'' gasoline.

(C) In the case of ''summer'' gasoline, where the blendstock is ethanol and the volume fraction calculated under paragraph (g)(3)(ii) is equal to or greater than 0.015, the value for RVP calculated under paragraph (g)(3)(iii) of this section shall be 1.0 psi greater than the RVP of the gasoline with which the blendstock is blended.

(iv) Using the summer or winter complex model, as appropriate, calculate the exhaust toxics and NO_X emissions performance, in mg/mi, of:

(A) A hypothetical gasoline having properties equal to those calculated in paragraph (g)(3)(iii) of this section (HEP); and

(B) A gasoline having properties equal to the refinery's or importer's baseline (BEP).

(v) Calculate the exhaust toxics and NO_X equivalent emissions performance (EEP) of the blendstock, in mg/mi, using the following equation:

$$EEP_j = \frac{HEP_j - \left(BEP_j * (1 - F)\right)}{F}$$

where:

EEP_j = equivalent emissions performance of the blendstock for emissions performance j
BEP_j = emissions performance j of a gasoline having the properties of the refinery's baseline
HEP_j = emissions performance j of a hypothetical blendstock/gasoline blend
F = blendstock volume fraction
j = exhaust toxics or NO_X emissions performance

(vi) For each blendstock batch, the volume, and exhaust toxics and NO_X equivalent emissions performance (EEP) shall be included in the refinery's compliance calculations.

(4) Compliance calculations under this subpart E shall be based on computations to the same degree of accuracy that are specified in establishing individual baselines under § 80.91.

(5) The emissions performance of gasoline that has an RVP that is equal to or less than the RVP required under § 80.27 (''summer gasoline'') shall be determined using the applicable summer complex model under § 80.45.

(6)(i) The emissions performance of gasoline that has an RVP greater than the RVP required under § 80.27 (''winter gasoline'') shall be determined using the applicable winter complex model under § 80.45, using an RVP of 8.7 psi for compliance calculation purposes under this subpart E.

(ii) Except as provided in paragraph (g)(1)(ii) of this section, the emissions performance of gasoline produced or imported for use in areas that are not subject to the requirements of § 80.27 shall be determined using the applicable winter complex model under § 80.45, using an RVP of 8.7 psi for compliance calculation purposes under this subpart E.

(7)(i) For the 1998 averaging period any refiner or importer may elect to determine compliance with the requirement for exhaust NO_X emissions performance either with or without the inclusion of oxygenates in its compliance calculations, in accordance with § 80.91(e)(4), provided that the baseline

exhaust NO_X emissions performance is calculated using the same with- or without-oxygen approach.

(ii)(A) Any refiner or importer must use the with- or without-oxygen approach elected under paragraph (g)(7)(i) of this section for all subsequent averaging periods; except that

(B) In the case of any refiner or importer who elects to determines compliance for the calendar year 1998 averaging period without the inclusion of oxygenates, such refiner or importer may elect to include oxygenates in its compliance calculations for the 1999 averaging period.

(iii) Any refiner or importer who elects to use the with-oxygen approach under paragraph (g)(7)(ii)(B) of this section must use this approach for all subsequent averaging periods.

(8) *Emissions performance of conventional gasoline with parameters outside the complex model valid range limits.* Notwithstanding the provisions of § 80.45(f)(2), in the case of any parameter value that does not fall within the complex model range limit in § 80.45(f)(1)(ii), the refiner or importer shall determine the emissions performance of the batch using the following parameter values:

Parameter outside the range limit	Parameter value to use for calculating	
	Exhaust toxics	NO_X
Sulfur	Test value [1]	Test value. [1]
RVP (summer only):		
< 6.4 psi	6.4 psi	6.4 psi.
> 11.0 psi	Test value [1]	Test value. [1]
Aromatics	Test value [1]	Test value. [1]
Olefins	Test value [1]	Test value. [1]
Benzene	Test value[1]	Test value. [1]
E200:		
< 30%	Test value [1]	30%
> 70%	70%	Test value. [1]
E300 < 70%	Test value [1]	Test value. [1]

[1] Test value is the value for a parameter determined pursuant to paragraph 80.101(i)(1)(i) of this section.

(9) *Exclusion of previously certified gasoline.* (i) Any refiner who uses previously certified reformulated or conventional gasoline or RBOB to produce conventional gasoline at a refinery, must exclude the previously certified gasoline for purposes of demonstrating compliance with the standards under paragraph (b) of this section.

(ii) To accomplish the exclusion required in paragraph (g)(9)(i) of this section, the refiner must determine the volume and properties of the previously certified gasoline used at the refinery, and the volume and properties of gasoline produced at the refinery, and use the compliance calculation procedures in paragraphs (g)(9)(iii) and (g)(9)(iv) of this section.

(iii) For each batch of previously certified gasoline that is used to produce conventional gasoline the refiner must:

(A) Determine the volume and properties using the procedures in paragraph (i) of this section;

(B) Determine the exhaust toxics and NO_X emissions performance using the summer or winter complex model as appropriate;

(C) Include the volume and emissions performance of the previously certified gasoline as a negative volume and a negative emissions performance in the refiner's compliance calculations for the refinery, or where applicable, the refiner's aggregation under paragraph (h) of this section, for exhaust toxics and NO_X.

(iv) For each batch of conventional gasoline produced at the refinery using previously certified gasoline, the refiner must determine the volume and properties, and exhaust toxics and NO_X emissions performance, and include each batch in the refinery's compliance calculations for exhaust toxics and NO_X without regard to the presence of previously certified gasoline in the batch.

(v) The refiner must use any previously certified gasoline that the refiner includes as a negative batch in its compliance calculations for the refinery, or where appropriate, the refiner's aggregation, as a component in gasoline production during the annual averaging period in which the previously certified gasoline was included as a negative batch in the refiner's compliance calculations.

(vi) Notwithstanding the provisions of this paragraph (g)(9), the provisions of paragraph (g)(3) of this section may be used to calculate the exhaust toxics and NO_X emissions performance of a blendstock added to conventional gasoline for purposes of demonstrating compliance with the standards under paragraph (b) of this section.

(h) *Refinery grouping for determining compliance.* (1) Any refiner that operates more than one refinery may:

(i) Elect to achieve compliance individually for the refineries; or

(ii) Elect to achieve compliance on an aggregate basis for a group, or for groups, of refineries, some of which may be individual refineries; provided that

(iii) Compliance is achieved for each refinery separately or as part of a group; and

(iv) The data for any refinery is included only in one compliance calculation.

(2) Any election by a refiner to group refineries under paragraph (h)(1) of this section shall:

(i) Be made as part of the report for the 1995 averaging period required by § 80.105; and

(ii) Apply for the 1995 averaging period and for each subsequent averaging period, and may not thereafter be changed.

(3)(i) Any standards under this section shall apply, and compliance calculations shall be made, separately for each refinery or refinery group; except that

(ii) Any refiner that produces conventional gasoline for distribution to a specified geographic area which is the subject of a petition approved by EPA pursuant to § 80.91(f)(3) shall achieve compliance separately for gasoline supplied to such specified geographic area.

(i) *Sampling and testing.* (1) Any refiner or importer shall for each batch of conventional gasoline, and other products if included in paragraph (d) of this section:

(i)(A) Determine the value of each of the properties required for determining compliance with the standards that are applicable to the refiner or importer, by collecting and analyzing a representative sample of gasoline or blendstock taken from the batch, using the methodologies specified in § 80.46; except that

(B) Any refiner that produces gasoline by combining blendstock with gasoline that has been included in the compliance calculations of another refiner or of an importer may for such gasoline meet this sampling and testing requirement by collecting and analyzing a representative sample of the blendstock used subsequent to each receipt of such blendstock if the compliance calculation method specified in paragraph (g)(3) of this section is used.

(ii) Assign a number to the batch (the ''batch number''), as specified in § 80.65(d)(3);

(2) For the purposes of meeting the sampling and testing requirements under paragraph (i)(1) of this section, any refiner or importer may, prior to analysis, combine samples of gasoline collected from more than one batch of gasoline or blendstock (''composite sample''), and treat such composite sample as one batch of gasoline or blendstock provided that the refiner or importer:

(i) Meets each of the requirements specified in § 80.91(d)(4)(iii) for the samples contained in the composite sample;

(ii) Combines samples of gasoline that are produced or imported over a period no longer than one month;

(iii) Uses the total of the volumes of the batches of gasoline that comprise the composite sample, and the results of the analyses of the composite sample, for purposes of compliance calculations under paragraph (g) of this section; and

(iv) Does not combine summer and winter gasoline, as specified under paragraphs (g) (5) and (6) of this section, in a composite sample.

(3) An importer who imports conventional gasoline into the United States by truck may meet the sampling and testing requirements under paragraph (i)(1) of this section as follows:

(i)(A) The importer must demonstrate that the imported gasoline meets the applicable conventional gasoline standards, through test results of samples of the gasoline contained in the storage tank from which the trucks used to transport gasoline into the United States are loaded.

(B) The frequency of this sampling and testing must be subsequent to each receipt of gasoline into the storage tank, or immediately prior to each transfer of gasoline to the importer's truck.

(C) The testing must be for each applicable parameter specified under

§ 80.65(e)(2)(i), using the test methods specified under § 80.46.

(D) The importer must obtain a copy of the terminal test results that reflects the quality of each truck load of gasoline that is imported into the United States.

(ii)(A) The importer must conduct separate programs of periodic quality assurance sampling and testing of the gasoline obtained from each truck-loading terminal, to ensure the accuracy of the terminal test results.

(B) The quality assurance samples must be obtained from the truck-loading terminal by the importer, and terminal operator may not know in advance when samples are to be collected.

(C) The importer must test each sample (or use a laboratory that is independent under § 80.82(b)(2) to test the sample) for the parameters specified under § 80.65(e)(2)(i) using the test methods specified under § 80.46, and the results must correlate with the terminal's test results within the ranges specified under § 80.65(e)(2)(i).

(D) The frequency of quality assurance sampling and testing must be at least one sample for each fifty of an importer's trucks that are loaded at a terminal, or one sample per month, whichever is more frequent.

(iii) The requirements of paragraph (i)(3)(ii) of this section are satisfied if the sampling and testing required under paragraph (i)(3)(i) is conducted by a laboratory that is an independent laboratory under the criteria of § 80.82(b)(2).

(iv) The importer must treat each truck load of imported gasoline as a separate batch for purposes of assigning batch numbers under § 80.101(i), recordkeeping under § 80.104, and reporting under § 80.105.

(v) EPA inspectors or auditors, and auditors conducting attest engagements under subpart F, must be given full and immediate access to the truck-loading terminal and any laboratory at which samples of gasoline collected at the terminal are analyzed, and be allowed to conduct inspections, review records, collect gasoline samples, and perform audits. These inspections or audits may be either announced or unannounced.

(vi) In the event the requirements specified in paragraphs (i)(3)(i) through (v) of this section are not met, in whole or in part, the importer shall immediately lose the option of importing gasoline under the terms of this paragraph (i)(3).

(j) *Evasion of standards through exporting and importing gasoline.* Notwithstanding the requirements of this section, no refiner or importer shall export gasoline and import the same or other gasoline for the purpose of evading a more stringent baseline requirement.

(k) *Petitions for an alternative anti-dumping averaging period*—(1) *Eligibility for petition.* (i) The Administrator may grant an averaging period of two, three, four or five years upon petition of a refiner who:

(A) Activates or plans to activate conventional gasoline production at a refinery that has never produced gasoline subject to the anti-dumping requirements of subpart E of this part; and

(B) Faces substantial, demonstrated hardship in meeting the anti-dumping statutory baseline NO_X standard during the early years of production.

(ii) The Administrator will consider the refiner's or refinery's compliance with all applicable Federal, state, and local environmental statutes or requirements in evaluating the petition, including, but not limited to, any applicable stationary source requirement or standards.

(2) *Contents of a petition.* A petition for a four or five year averaging period must be submitted by June 1, 2001. A petition for a two or three year averaging period must be submitted by June 1, 2003. Regardless of the averaging period requested, the petition must include:

(i) The business name and address of the affected refinery and any location(s) where the refiner conducts operations.

(ii) The name, address, phone number, fax number, and e-mail address of the responsible corporate officer and contact person who can provide clarification and explanation with regard to any information in the petition.

(iii) A detailed explanation of why the refinery is eligible for an alternative anti-dumping compliance period under paragraph (k)(1) of this section, including:

(A) Documentation the refinery has never produced gasoline that was subject to the anti-dumping standards under subpart E of this part and

(B) Documentation demonstrating the hardship the refinery will experience meeting the anti-dumping statutory baseline NO_X standard.

(iv) The length of the averaging period requested and a justification for why that length of averaging period is required.

(v) An estimate as to when the refinery can produce gasoline that will meet the statutory baseline standard for NO_X.

(vi) The refinery's estimated gasoline production and annual average NO_X level for each of the years for which the alternative averaging period is requested.

(vii) A detailed description of the current refinery equipment and configuration.

(viii) A detailed description of changes to the refinery equipment the refiner intends to complete in order to begin producing gasoline that will allow the refinery to comply with the overall alternative averaging period NO_X standard, and for such changes the intended dates for events the refiner believes are appropriate for demonstrating reasonable progress towards completion of the changes, including the following events:

(A) Sign the design contract;

(B) Obtain necessary permits;

(C) Obtain construction financing commitments;

(D) Begin construction.

(E) Complete construction

(ix) The current nominal crude capacity of the refinery as reported to the Energy Information Administration (EIA) of the Department of Energy (DOE).

(x) A detailed explanation of the refiner's plans to finance capital improvements at the refinery in order to meet all current applicable EPA gasoline and diesel fuel quality standards.

(xi) A demonstration that the refiner has the funds and identified sources from which to purchase stationary source NO_X credits sufficient to offset the maximum projected NO_X deficit as calculated in accordance with paragraph (k)(4)(ii) of this section on a quarterly basis.

(xii) A full disclosure and explanation of any matters of non-compliance or violations of any environmental statutes or requirements for which the refiner has received notification by any state, local, or Federal agency.

(xiii) A signed agreement by any parent company or, in the case of a joint venture, individual partners, if applicable, acknowledging that they will be liable for any violations.

(xiv) Any other information the Administrator may require in order to fully evaluate the refiner's petition.

(xv) The signature of a responsible corporate officer, certifying that the information contained in the petition is true.

(3) *NO_X standards and other requirements applicable to refineries operating under an alternative anti-dumping averaging period*. If a petition by a refiner is approved, the standards described in this paragraph shall be the standards applicable to the refinery identified in the petition for purposes of the anti-dumping program during the period of the alternative averaging period. Except as specifically modified by this section, the refinery must continue to comply with all other standards applicable under the anti-dumping standards of subpart E of this part.

(i) A refinery shall meet the following deadlines for compliance with the statutory baseline, depending on the length of the alternative averaging period applicable to the refinery:

Length of compliance period in years	Compliance period must start no later than January 1st of	Refinery must comply with the Statutory Baseline NO_X standard, on average, for gasoline produced beginning with the
2	2004	7th quarter and all subsequent quarters.
3	2003	10th quarter and all subsequent quarters.
4	2002	13th quarter and all subsequent quarters.
5	2001	16th quarter and all subsequent quarters.

(ii)(A) By the end of the applicable alternative averaging period, the refinery must generate a net NO_X benefit (compared to the statutory baseline) that is at least twice as large as the total NO_X deficit generated during the period of time during which the refiner produced gasoline that did not comply with the statutory baseline.

(B) At least one-half of the total NO_X benefit required under paragraph (k)(3)(ii)(A) of this section must be generated by production of conventional gasoline at the refinery that is cleaner than the statutory baseline NO_X standard, as calculated on a quarterly basis in accordance with the provision of this paragraph (k)(3)(ii).

(C) Any portion of the total NO_X benefit beyond that portion described under paragraph (k)(3)(ii)(B) of this section may come from either the production of conventional gasoline at the refinery that is cleaner than the statutory baseline NO_X standard, as calculated on a quarterly basis, or from the purchase and retirement of stationary source NO_X credits or allowances, as provided in paragraph (k)(3)(iii) of this section.

(D) For the purposes of this § 80.101(k) and § 80.101(l), the NO_X deficit in tons shall be calculated in accordance with the following equation:

$$NO_{XDef} = (NO_{Xad} - NO_{Xsea})* G_d*2.7\times10^{-8}$$

Where:

NO_{XDef} = the NO_X deficit, in tons, for a calendar quarter in which the refiner's NO_X performance for that quarter exceeds NO_{Xsea}.

NO_{Xad} = the average volume weighted NO_X emissions performance, in mg/mile, for a calendar quarter in which the refiner exceeds NO_{Xsea}.

NO_{Xsea} = quarterly statutory NO_X performance values. First calendar quarter = 1540 mg/mile; Second calendar quarter = 1383 mg/mile; Third calendar quarter = 1381 mg/mile; Fourth calendar quarter = 1540 mg/mile.

G_d = the volume of gasoline produced during a quarter in which the refiner exceeds the applicable NO_X standard, measured in gallons.

(E) For the purposes of this § 80.101(k) and § 80.101(l), the NO_X benefit in tons shall be calculated in accordance with the following equation:

$$NO_{XBen}\ (NO_{Xsea}—NO_{Xab})*G_d*2.7\times10^{-8}$$

Where:

NO_{XBen} = the NO_X benefit, in tons, for a calendar quarter in which the refiner's NO_X performance for that quarter is below NO_{Xsea}.

NO_{Xab} = the average volume weighted NO_X emissions performance, in mg/mile, for a calendar quarter in which the refiner is below NO_{Xsea}.

NO_{Xsea} = quarterly statutory NO_X performance values. First calendar quarter = 1540 mg/mile; Second calendar quarter = 1383 mg/mile; Third calendar quarter = 1381 mg/mile; Fourth calendar quarter = 1540 mg/mile.

G_b = the volume of gasoline produced during a quarter in which the refiner is below the applicable NO_X standard, measured in gallons.

(iii) NO_X Credits and Allowances. (A) Within 60 days of the end of each quarter for which the refinery produces gasoline for which there is a NO_X deficit, the refiner shall purchase stationary source NO_X credits or allowances that are equal to or greater than the amount of the NO_X deficit generated during the quarter, and provide written demonstration of such transaction to the Administrator. These NO_X credits or allowances are in addition to any NO_X credits or allowances purchased during any previous quarters. NO_X deficit is to be calculated on a quarterly basis in accordance with the equation in paragraph (k)(3)(ii)(D) of this section.

(B) No NO_X credits or allowances purchased by the refiner may contribute to the refinery's compliance with the requirements of paragraphs (k)(3)(ii)(B) of this section.

(C) The refinery may sell NO_X credits or allowances purchased under this paragraph (k)(3)(iii) only in an amount equal to or less than any NO_X benefit that the refinery generates subsequently through the production of conventional gasoline at the refinery that is cleaner than the statutory baseline NO_X standard, as calculated on a quarterly basis. A refiner may retire credits or allowances purchased under this paragraph (k)(3)(iii) at any time.

(D) For purposes of satisfying a refinery's obligations under paragraphs (k)(3)(ii)(C), (k)(3)(iii)(A) or (l)(6)(ii) of this section, any NO_X credits or allowances that a refiner purchases must have been validly generated as part of

a state stationary source program covered by an approved state implementation plan (SIP) and must be current and marketable NO_X credits or allowances. It shall be the refiner's responsibility to ensure that NO_X credits or allowances are valid, current and marketable.

(E) In order to be retired, NO_X allowances or credits must be retired by EPA or the administering state agency, as provided for in the applicable state implementation plan (SIP). It shall be the refiner's responsibility to ensure that NO_X credits or allowances are actually retired and that retirement is reflected in the records of EPA or the administering state agency.

(iv) (A) The refinery shall not generate marketable credits or allotments under the Tier 2 gasoline program provisions of subpart H of this part during the entire alternative averaging period and shall provide a written statement, on a quarterly basis, certifying that the refinery has not generated, produced, sold, or transferred any such marketable credits or allotments under Subpart H of this part.

(B) If the final quarter of the alternative averaging period ends on a date other than December 31, then the refiner may generate credits for that portion of the year that was not subject to the alternative averaging period.

(v) The refinery shall market any conventional gasoline it produces that is subject to the requirements of § 80.27 as 9.0 RVP gasoline until the standard in paragraph (k)(3)(i) of this section is met.

(vi) A refinery that has been granted an averaging period under this section must submit the following reports to the Administrator within 30 days of the end of each calendar quarter:

(A) Quarterly batch reports and antidumping averaging reports for gasoline produced during each quarter; and

(B)(*1*) Documents that demonstrate compliance with the requirements under paragraph (k)(3)(iii) and (k)(3)(iv) of this section. including a calculation of the NO_X deficit or benefit for that quarter and a current total, based upon all quarters, indicating the current NO_X deficit or NO_X benefit balance for the refinery; and

(2) A statement of the number of NO_X credits or allowances purchased, sold or retired during the quarter and a current total, based upon all quarters, indicating the current balance of NO_X credits or allowances; and

(3) Any contractual documents, or other documents, evidencing the purchasing, banking or retiring of NO_X credits or allowances.

(vii) The Administrator may specify, as part of the approved petition, deadlines by which a refiner is obligated to take certain actions (including those listed in paragraph (k)(2)(viii) of this section) demonstrating reasonable progress toward completion of the refinery changes necessary to produce gasoline that will allow the refinery to comply with the overall alternative averaging period NO_X standard.

(viii)(A) The refiner shall submit reports demonstrating compliance with deadline requirements under paragraph (k)(3)(vii) of this section no later than 30 days after the applicable deadline occurs. Upon failure to meet a deadline requirement under paragraph (k)(3)(vii) of this section, the Administrator may accelerate the date by which the refiner would have to produce gasoline that complies with the annual average statutory baseline NO_X standard under paragraph (k)(3)(i) or (l)(6)(i) of this section such that the gasoline produced by the refinery beginning with the quarter immediately following the quarter during which the failure occurred (and during each subsequent quarter) would have to meet that standard. The acceleration of the requirement under paragraph (k)(3)(i) or (l)(6)(i) of this section, regarding compliance with the annual average statutory baseline NO_X standard, does not affect the applicability of any other standard or requirement applicable to the refinery under this or any other section of the Act (*e.g.*, the refinery must still comply with the overall alternative averaging period NO_X requirements in paragraph (k)(3)(ii) of this section).

(B) The reports required by this paragraph shall be on forms and following

procedures specified by the Administrator of the EPA and signed and certified as correct by the owner or a responsible corporate officer of the refiner.

(ix) The refiner shall comply with any condition or requirement prescribed by the Administrator as part of the petition approval.

(x) The refinery must comply with all standards in this paragraph and with all applicable anti-dumping standards in Subpart E of this section, except the NO_X standard.

(4) *Approval or disapproval of petitions.* The Administrator will approve or disapprove the petition within six months of receipt, in writing, and in the case of an approval will include any conditions or requirements to which the approval is subject.

(5) *Effective date for alternative averaging period.* (i) For an approved petition, the alternative averaging period shall become effective with the first day of the next calendar quarter, unless the first day of a later calendar quarter is requested.

(ii) If the final quarter of the alternative averaging period ends on a date other than December 31, then the refiner must demonstrate compliance with anti-dumping standards for gasoline produced during the remainder of that year and must demonstrate such compliance via the annual report as specified in § 80.105.

(6) *Refinery request for a change in alternative averaging period.* At any point during the pendency of an alternative conventional gasoline anti-dumping compliance period the Administrator may, upon application by a refiner, approve a different alternative compliance period for a refinery already operating subject to an alternative compliance period. In any such case:

(i) A refinery for which a change in the applicable alternative compliance period is approved shall thereafter operate as if the refinery had originally requested and received such alternative compliance period, and shall be subject to the standards and other requirements applicable under such alternative compliance period.

(ii) The Administrator will approve or disapprove any application for a different alternative compliance period, in writing, within six months of receipt, and in the case of an approval will include any conditions or other requirements to which the approval is subject;

(iii) Accept as specifically modified by this section, such refinery must continue to comply with all other standards and other requirements applicable under the conventional gasoline anti-dumping standards; and

(iv) No application may result in an alternative compliance period that extends beyond January 1, 2006, except as provided in paragraph (l) of this section.

(7) *Violations under this paragraph (k).* Any person who fails to meet a standard or other requirement under this paragraph (k) shall be liable for penalties under § 80.5. Additionally, in the event that the refiner fails to achieve the required NO_X benefit calculated under paragraph (k)(3)(ii) of this section, any NO_X credits still banked under paragraph (k)(3)(iii) of this section shall be forfeit.

(l) *Special alternative anti-dumping averaging period provisions for small refineries*—(1) *Eligibility for petition.* A refiner who has been granted small refiner status under § 80.235 and who meets the eligibility requirements in paragraph (k)(1) of this section may petition for an alternative compliance period that is greater than five years and/or that extends beyond January 1, 2006, provided that such application is submitted by January 1, 2004. No application under this paragraph (l) may result in an alternative compliance period that extends beyond January 1, 2008.

(2) *Application process.* Applications must be submitted to the Administrator by January 1, 2004, to the following address: U.S. EPA—Attn: Anti-Dumping Compliance Period (6406J), 1200 Pennsylvania Avenue, NW, Washington, DC 20460 (certified mail/return receipt) or U.S. EPA—Attn: Anti-Dumping Compliance Period (6406J), Transportation & Regional Programs Division, 501 3rd Street, NW, Washington, DC 20001 (express mail/return receipt).

(3) *Contents of the application petition.* Each petition must include:

(i) The information and signed statements specified for all petitioners under § 80.101(k)(2);

(ii) A description of the hardships that make it infeasible, on a cost and/or technological basis, for the refinery to comply with an alternative anti-dumping compliance baseline of five years or less, or that ends on or before January 1, 2006.

(iii) A quarterly timeline, from the date of the application, indicating the expected NO_X emissions performance of the refinery's conventional gasoline, and the reasons for any expected non-compliance with the statutory baseline standard for NO_X on a quarterly basis (for example, a particular gasoline blendstock-producing unit not yet installed). The timeline shall include the date by which the refinery will produce conventional gasoline that complies with the annual average statutory NO_X baseline on a quarterly basis as determined according to § 80.101(k)(3)(ii).

(iv) A demonstration that the conditions for which the refinery was granted small refiner status under § 80.235 are still applicable.

(v) Information already submitted to the Administrator as part of a prior petition under paragraph (k) of this section, shall be updated if applicable.

(4) Approval or disapproval of petitions. The Administrator may approve a petition under this paragraph (l) if it includes information sufficient to demonstrate to the Administrator's satisfaction that cost and/or technological constraints make it infeasible for the refinery to comply with an alternative anti-dumping compliance baseline of five years or less, or that ends on or before January 1, 2006. The Administrator will approve or deny the petition in writing within six months of receipt. An approval will include any conditions or requirements to which the approval is subject.

(5) *Cessation of extended alternative compliance period.* (i) Refineries that qualify as small under § 80.223, and that later are disqualified under § 80.230(b), will be subject to the statutory anti-dumping baseline on an annual average basis beginning the calendar year immediately following the refinery's change in status.

(ii) If the Administrator finds that a refiner provided false or inaccurate information on its application for small refiner status, upon notice from the Administrator, the refiner's extended alternative compliance period will be void ab initio.

(6) *Compliance requirements for qualifying small refiners.* (i) If the refiner's application for an extended compliance period under this paragraph (l) is approved, then the refinery must comply with the statutory baseline NO_X standard, on average, for gasoline produced beginning by not later than the 19th quarter (for a six year compliance period) or by no later than the 22nd quarter (for a seven year compliance period).

(ii) The refinery must meet all other applicable requirements in paragraph (k) of this section, including the production of a net NO_X benefit under paragraph (k)(3)(ii) of this section, except that the following provisions shall apply:

(A) For any cumulative NO_X deficit remaining at the expiration of the fifth year, based on the NO_X emission performance of gasoline actually produced at the refinery, and as calculated under paragraph (k)(3)(ii) of this section, the refiner shall provide an additional NO_X benefit equal to one half ton of NO_X emissions per ton of deficit remaining by the end of the refinery's alternative anti-dumping averaging period.

(B) For any cumulative NO_X deficit remaining at the expiration of the sixth year, based on the NO_X emission performance of gasoline actually produced at the refinery, and as calculated under paragraph (k)(3)(ii) of this section, the refiner shall provide an additional NO_X benefit equal to one ton of NO_X emissions per ton of deficit remaining by the end of the refinery's alternative anti-dumping averaging period.

(C) The additional NO_X benefits required under this paragraph (l)(6)(ii) of this section may come from the production of gasoline at the refinery that is cleaner than the statutory baseline or from the purchase and retirement of

stationary source NO_X credits or allowances as provided in paragraph (k)(3)(iii) of this section.

[59 FR 7860, Feb. 16, 1994, as amended at 59 FR 36968, July 20, 1994; 60 FR 40008, Aug. 4, 1995; 62 FR 9884, Mar. 4, 1997; 62 FR 68207, Dec. 31, 1997; 64 FR 30910, June 9, 1999; 64 FR 37689, July 13, 1999; 65 FR 54431, Sept. 8, 2000; 66 FR 67107, Dec. 28, 2001; 67 FR 8738, Feb. 26, 2002; 68 FR 24307, May 6, 2003; 70 FR 74572, Dec. 15, 2005; 72 FR 8543, Feb. 26, 2007; 72 FR 60580, Oct. 25, 2007]

§ 80.102 [Reserved]

§ 80.103 Registration of refiners and importers.

Any refiner or importer of conventional gasoline must register with the Administrator in accordance with the provisions specified at § 80.76.

§ 80.104 Recordkeeping requirements.

Any parties in the gasoline distribution network shall maintain records containing the information as required by this section.

(a) For any refiner or importer, beginning in 1995, for each averaging period:

(1) Documents containing the information specified in paragraph (a)(2) of this section shall be obtained for:

(i) Each batch of conventional gasoline; and

(ii) Each batch of blendstock received in the case of any refiner that determines compliance on the basis of blendstocks properties under § 80.101(g)(3).

(2)(i) The results of tests performed in accordance with § 80.101(i);

(ii) The volume of the batch;

(iii) The batch number;

(iv) The date of production, importation or receipt;

(v) The designation regarding whether the batch is summer or winter gasoline;

(vi) The product transfer documents for any conventional gasoline produced or imported;

(vii) The product transfer documents for any conventional gasoline received;

(viii) For any gasoline blendstocks received by or transferred from a refiner or importer, documents that reflect:

(A) The identification of the product;

(B) The date the product was transferred; and

(C) The volume of product;

(ix) [Reserved]

(x) In the case of oxygenate that is added by a person other than the refiner or importer under § 80.101(d)(4)(ii)(B), documents that support the volume of oxygenate claimed by the refiner or importer, including the contract with the oxygenate blender and records relating to the audits, sampling and testing, and inspections of the oxygenate blender operation.

(xi) In the case of blendstocks that are included in refinery compliance calculations using the procedures under § 80.101(g)(3), documents that reflect the volume of blendstock and the volume of gasoline with which the blendstock is blended.

(xii) In the case of gasoline classified as previously certified gasoline under the terms of § 80.101(g)(9), the results of the tests to determine the properties and volume of the previously certified gasoline when received at the refinery and records that reflect the storage and movement of the previously certified gasoline to the point the previously certified gasoline is used to produce conventional gasoline.

(xiii) In the case of gasoline subject to an approved petition under § 80.93(d), documents that reflect that the gasoline was produced or imported for use in Alaska, Hawaii, the Commonwealth of Puerto Rico, and the Virgin Islands, as applicable.

(xiv) In the case of butane blended into conventional gasoline under § 80.82, documentation of:

(A) The volume of the butane added;

(B) The volume of the gasoline prior to and subsequent to the butane blending;

(C) The purity and properties of the butane under § 80.82(c) and (d), as appropriate; and

(D) Compliance with the requirements of § 80.82.

(xv) In the case of any imported GTAB, documents that reflect the physical movement of the GTAB from the point of importation to the point of blending to produce gasoline.

(b) For all parties described in this section that produce and distribute gasoline, in the case of any interface or

transmix used to produce conventional gasoline under § 80.84, records that reflect the results of any sampling and testing of conventional gasoline under § 80.84.

(1) Pipelines must keep records showing that the interface was designated in the proper manner according to the designations listed in § 80.84(b)(1).

(2) Transmix processors and transmix blenders must keep records showing that their transmix meets the definition in § 80.84(a)(2), or contains gasoline and distillate fuel only from the sources listed in § 80.84(e).

(3) Transmix processors must keep records showing the volumes of conventional gasoline recovered from transmix and the type and amount of any blendstock added, if applicable.

(4) Transmix blenders must keep records showing compliance with the quality assurance program and/or sampling and testing requirements in § 80.84(d)(2) or (d)(3) for each batch of conventional gasoline with which transmix is blended, the volume of the batch, and the volume of transmix blended into the batch.

(c) All parties in the gasoline distribution network shall retain the documents required in this section for a period of five years from the date the conventional gasoline or blendstock is produced or imported, and deliver such documents to the Administrator of EPA upon the Administrator's request.

[59 FR 7860, Feb. 16, 1994, as amended at 59 FR 36969, July 20, 1994; 62 FR 68208, Dec. 31, 1997; 66 FR 67107, Dec. 28, 2001; 67 FR 8738, Feb. 26, 2002; 70 FR 74573, Dec. 15, 2005; 71 FR 31963, June 2, 2006; 72 FR 60581, Oct. 25, 2007]

§ 80.105 Reporting requirements.

(a) Beginning with the 1995 averaging period, and for each subsequent averaging period, any refiner for each refinery or group of refineries at which any conventional gasoline is produced, and any importer that imports any conventional gasoline, shall submit to the Administrator a report which contains the following information:

(1) The total gallons of conventional gasoline produced or imported;

(2)–(3) [Reserved]

(4)(i) If using the simple model:

(A) The applicable exhaust benzene emissions standard under § 80.101(b)(1)(i);

(B) The average exhaust benzene emissions under § 80.101(g);

(C) The applicable sulfur content standard under § 80.101(b)(1)(ii) in parts per million;

(D) The average sulfur content under § 80.101(g) in parts per million;

(E) The difference between the applicable sulfur content standard under § 80.101(b)(1)(ii) in parts per million and the average sulfur content under paragraph (a)(4)(i)(D) of this section in parts per million, indicating whether the average is greater or lesser than the applicable standard;

(F) The applicable olefin content standard under § 80.101(b)(1)(iii) in volume percent;

(G) The average olefin content under § 80.101(g) in volume percent;

(H) The difference between the applicable olefin content standard under § 80.101(b)(1)(iii) in volume percent and the average olefin content under paragraph (a)(4)(i)(G) of this section in volume percent, indicating whether the average is greater or lesser than the applicable standard;

(I) The applicable T90 distillation point standard under § 80.101(b)(1)(iv) in degrees Fahrenheit;

(J) The average T90 distillation point under § 80.101(g) in degrees Fahrenheit; and

(K) The difference between the applicable T90 distillation point standard under § 80.101(b)(1)(iv) in degrees Fahrenheit and the average T90 distillation point under paragraph (a)(4)(i)(J) of this section in degrees Fahrenheit, indicating whether the average is greater or lesser than the applicable standard.

(ii) If using the optional complex model, the applicable exhaust benzene emissions standard and the average exhaust benzene emissions, under § 80.101(b)(2) and (g).

(iii) If using the complex model:

(A) The applicable exhaust toxics emissions standard and the average exhaust toxics emissions, under § 80.101(b)(3) and (g); and

(B) The applicable NO_X emissions standard and the average NO_X emissions, under § 80.101(b)(3) and (g).

(5) The following information for each batch of conventional gasoline or batch of blendstock included under paragraph (a) of this section:

(i) The batch number;

(ii) The date of production;

(iii) The volume of the batch;

(iv) The grade of gasoline produced (i.e., premium, mid-grade, or regular);

(v) The properties, pursuant to § 80.101(i);

(vi) In the case of any previously certified gasoline used in a refinery operation under the terms of § 80.101(g)(9), the following information relative to the previously certified gasoline when received at the refinery:

(A) Identification of the previously certified gasoline as such;

(B) The batch number assigned by the receiving refinery;

(C) The date of receipt; and

(D) The volume, properties and designation of the batch;

(vii) In the case of butane blended with conventional gasoline under § 80.82:

(A) Identification of the butane batch as complying with the provisions of § 80.82;

(B) Identification of the butane batch as commercial or non-commercial grade butane;

(C) The batch number of the butane;

(D) The date of production of the gasoline produced using the butane;

(E) The volume of the butane batch;

(F) The properties of the butane batch specified by the butane supplier, or the properties specified in § 80.82(c) or (d), as appropriate.

(G) Where butane is blended with conventional gasoline during the period May 1 through September 15, the Reid vapor pressure, as measured using the appropriate test method in § 80.46; and

(viii) In the case of any imported GTAB, identification of the gasoline as GTAB.

(6) Such other information as EPA may require.

(7) For refiners that blend any butane with conventional gasoline under § 80.82, the report required under paragraph (a) of this section must include the following information for the annual averaging period:

(i) The total volume of butane blended with conventional gasoline;

(ii) The total volume of conventional gasoline produced using butane;

(iii) A statement that the gasoline produced using butane meets all applicable downstream standard that apply to conventional gasoline under Subpart E; and

(iv) A statement that all butane blended with conventional gasoline at the refinery is included in the volume under paragraph (a)(7)(i) of this section, or a statement that all butane blended with conventional gasoline is included in the refinery's annual average compliance calculations under § 80.101.

(b) The reporting requirements of paragraph (a) of this section do not apply in the case of any conventional gasoline or gasoline blendstock that is excluded from a refiner's or importer's compliance calculation pursuant to § 80.101(e).

(c) For each averaging period, each refiner for each refinery and importer shall cause to be submitted to the Administrator of EPA, by May 31 of each year, a report in accordance with the requirements for the Attest Engagements of § 80.125 through § 80.131.

(d) The report required by paragraph (a) of this section shall be:

(1) Submitted on forms and following procedures specified by the Administrator of EPA;

(2) Submitted to EPA by the last day of February each year for the prior calendar year averaging period; and

(3) Signed and certified as correct by the owner or a responsible corporate officer of the refiner or importer.

[59 FR 7860, Feb. 16, 1994, as amended at 59 FR 36969, July 20, 1994; 60 FR 65575, Dec. 20, 1995; 66 FR 67108, Dec. 28, 2001; 67 FR 8738, Feb. 26, 2002; 70 FR 74573, Dec. 15, 2005]

§ 80.106 Product transfer documents.

(a)(1) On each occasion when any person transfers custody or title to any conventional gasoline, the transferor shall provide to the transferee documents which include the following information:

(i) The name and address of the transferor;

(ii) The name and address of the transferee;

(iii) The volume of gasoline being transferred;

(iv) The location of the gasoline at the time of the transfer;

(v) The date of the transfer; and

(vi) The following statement: ''This product does not meet the requirements for reformulated gasoline, and may not be used in any reformulated gasoline covered area.''

(2) The requirements of paragraph (a)(1) of this section apply to product that becomes gasoline upon the addition of oxygenate only.

(b) [Reserved]

[59 FR 7860, Feb. 16, 1994, as amended at 67 FR 8738, Feb. 26, 2002; 70 FR 74573, Dec. 15, 2005]

§§ 80.107–80.124 [Reserved]

Subpart F—Attest Engagements

SOURCE: 59 FR 7875, Feb. 16, 1994, unless otherwise noted.

§ 80.125 Attest engagements.

(a) Any refiner and importer subject to the requirements of this subpart F shall engage an independent certified public accountant, or firm of such accountants (hereinafter referred to in this subpart F as ''CPA''), to perform an agreed-upon procedures attestation engagement of the underlying documentation that forms the basis of the reports required by §§ 80.75 and 80.105.

(b) The CPA shall perform the attestation engagements in accordance with the Statements on Standards for Attestation Engagements.

(c) The CPA may complete the requirements of this subpart F with the assistance of internal auditors who are employees or agents of the refiner or importer, so long as such assistance is in accordance with the Statements on Standards for Attestation Engagements.

(d) Notwithstanding the requirements of paragraph (a) of this section, any refiner or importer may satisfy the requirements of this subpart F if the requirements of this subpart F are completed by an auditor who is an employee of the refiner or importer, provided that such employee:

(1) Is an internal auditor certified by the Institute of Internal Auditors, Inc. (hereinafter referred to in this subpart F as ''CIA''); and

(2) Completes the internal audits in accordance with the Codification of Standards for the Professional Practice of Internal Auditing.

(e) Use of a CPA or CIA who is debarred, suspended, or proposed for debarment pursuant to the Governmentwide Debarment and Suspension Regulations, 2 CFR part 1532, or the Debarment, Suspension, and Ineligibility Provisions of the Federal Acquisition Regulations, 48 CFR part 9, subpart 9.4, shall be deemed in noncompliance with the requirements of this section.

(f) The following documents are incorporated by reference: the Statements on Standards for Attestation Engagements, Codification of Statements on Auditing Standards, written by the American Institute of Certified Public Accountants, Inc., 1991, and published by the Commerce Clearing House, Inc., Identification Number 059021, and the Codification of Standards for the Professional Practice of Internal Auditing, written and published by the Institute of Internal Auditors, Inc., 1989, Identification Number ISBN 0–89413–207–5. These incorporations by reference were approved by the Director of the Federal Register in accordance with 5 U.S.C. 552(a) and 1 CFR part 51. Copies of the Statements on Standards for Attestation Engagements may be obtained from the American Institute of Certified Public Accountants, Inc., 1211 Avenue of the Americas, New York, New York 10036, and copies of the Codification of Standards for the Professional Practice of Internal Auditing may be obtained from the Institute of Internal Auditors, Inc., 249 Maitland Avenue, Altamonte Springs, Florida 32701–4201. Copies may be inspected at the U.S. Environmental Protection Agency, Office of the Air Docket, 401 M St., SW., Washington, DC., or at the National Archives and Records Administration (NARA). For information on the availability of this material at NARA, call 202–741–6030, or go to: *http://www.archives.gov/federal_register/*

code_of_federal_regulations/ibr_locations.html.

[59 FR 7875, Feb. 16, 1994, as amended at 59 FR 36969, July 20, 1994; 70 FR 74573, Dec. 15, 2005; 71 FR 26701, May 8, 2006; 72 FR 2427, Jan. 19, 2007]

§ 80.126 Definitions.

The following definitions shall apply for the purposes of this subpart F:

(a) *Averaging compliance records* shall include the calculations used to determine compliance with relevant standards on average, for each averaging period and for each quantity of gasoline for which standards must be achieved separately.

(b) *Credit Trading Records.* Credit trading records shall include worksheets and EPA reports showing actual and complying totals for benzene; credit calculation worksheets; contracts; letter agreements; and invoices and other documentation evidencing the transfer of credits.

(c) *Designation records* shall include laboratory analysis reports that identify whether gasoline meets the requirements for a given designation; operational and accounting reports of product storage; and product transfer documents.

(d) *Oxygenate blender records* shall include laboratory analysis reports; refiner, importer and oxygenate blender contracts; quality assurance program records; product transfer documents; oxygenate purchasing, inventory, and usage records; and daily tank inventory gauging reports, meter tickets, and product transfer documents.

(e) *Product transfer documents* means copies of documents represented by the refiner/importer/oxygenate blender as having been provided to the transferee, and that reflect the transfer of ownership or physical custody of gasoline or blendstock (e.g., invoices, receipts, bills of lading, manifests, and/or pipeline tickets).

(f) *Tender* means the transfer of ownership or physical custody of a volume of gasoline or other petroleum product all of which has the same identification (reformulated gasoline, conventional gasoline, RBOB, and other nonfinished-gasoline petroleum products), and characteristics (time and place of use restrictions for reformulated gasoline and RBOB).

(g) *Volume records* shall include summaries of gasoline produced or imported that account for the volume of each type of gasoline produced or imported. The volumes shall be based on tank gauges or meter reports and temperature adjusted to 60 degrees Fahrenheit.

(h) *Attestor* means the CPA or CIA performing the agreed-upon procedures engagement under this subpart.

(i) *Foot (or crossfoot)* means to add a series of numbers, generally in columns (or rows), to a total amount. When applying the attestation procedures in this subpart F, the attestor may foot to subtotals on a sample basis in those instances where subtotals (e.g., page totals) exist. In such instances, the total should be footed from the subtotals and the subtotals should be footed on a test basis using no less than 25% of the subtotals.

(j) *Laboratory Analysis* means the original test result for each analysis that was used to determine a product's properties. For laboratories using test methods that must be correlated to the standard test method, the correlation factors and results shall be included as part of the laboratory analysis. For refineries or importers that produce reformulated gasoline or RBOB and use the 100% independent lab testing, the laboratory analysis shall consist of the results reported to the refinery or importer by the independent lab. Where assumed properties used (e.g., for butane) the assumed properties may serve as the test results.

(k) *Non-finished-gasoline petroleum products* means liquid petroleum products that have boiling ranges greater than 75 degrees Fahrenheit, but less than 450 degrees Fahrenheit, as per ASTM D 86 or equivalent.

(l) *Reporting period* means the time period relating to the reports filed with EPA by the refiner, importer, or oxygenate blender, and generally is the calendar year.

[59 FR 7875, Feb. 16, 1994, as amended at 70 FR 74574, Dec. 15, 2005; 71 FR 26701, May 8, 2006]

§ 80.127 Sample size guidelines.

In performing the attest engagement, the auditor shall sample relevant populations to which agreed-upon procedures will be applied using the methods specified in this section, which shall constitute a representative sample.

(a) Sample items shall be selected in such a way as to comprise a simple random sample of each relevant population; and

(b) Sample size shall be determined using one of the following options:

(1) *Option 1.* Determine the sample size using the following table:

SAMPLE SIZE, BASED UPON POPULATION SIZE

No. in population (N)	Sample size
66 and larger	29
41–65	25
26–40	20
0–25	N or 19, whichever is smaller.

(2) *Option 2.* Determine the sample size in such a manner that the sample size is equal to that which would result by using the following parameters and standard statistical methodologies:

Confidence Level—95%
Expected Error Rate—0%
Maximum Tolerable Error Rate—10%

(3) *Option 3.* The auditor may use some other form of sample selection and/or some other method to determine the sample size, provided that the resulting sample affords equal or better strength of inference and freedom from bias (as compared with paragraphs (b)(1) and (2) of this section), and that the auditor summarizes the substitute methods and clearly demonstrates their equivalence in the final report on the audit.

§ 80.128 Alternative agreed upon procedures for refiners and importers.

Prior to the attest report for the 2006 reporting period, the following minimum attest procedures may be carried out for a refinery or importer, in lieu of the attest procedures specified in § 80.133.

(a) Read the refiner's or importer's reports filed with EPA for the previous year as required by §§ 80.75, 80.83(g), and 80.105.

(b) Obtain a gasoline inventory reconciliation analysis for the current year from the refiner or importer which includes reformulated gasoline, RBOB, conventional gasoline, and non-finished-gasoline petroleum products.

(1) Test the mathematical accuracy of the calculations contained in the analysis.

(2) Agree the beginning and ending inventories to the refiner's or importer's perpetual inventory records.

(c) Obtain separate listings of all tenders during the current year of reformulated gasoline, RBOB, conventional gasoline, and non-finished-gasoline petroleum products.

(1) Test the mathematical accuracy of the calculations contained in the listings.

(2) Agree the listings of tenders' volumes to the gasoline inventory reconciliation in paragraph (b) of this section.

(3) Agree the listings of tenders' volumes, where applicable, to the EPA reports.

(d) Select a representative sample from the listing of reformulated gasoline tenders, and for this sample:

(1) Agree the volumes to the product transfer documents;

(2) Compare the product transfer documents designation for consistency with the time and place, and compliance model designations for the tender (VOC-controlled or non-VOC-controlled, VOC region for VOC-controlled, summer or winter gasoline, and simple or complex model certified); and

(3) Trace back to the batch or batches in which the gasoline was produced or imported. Obtain the refiner's or importer's internal laboratory analyses for each batch and compare such analyses for consistency with the analyses results reported to EPA and to the time and place designations for the tender's product transfer documents.

(e) Select a representative sample from the listing of RBOB tenders, and for this sample:

(1) Agree the volumes to the original product transfer documents;

(2) Determine that the requisite contract was in place with the downstream blender designating the required blending procedures, or that the refiner or importer accounted for the RBOB using the assumptions in § 80.69(a)(8) in the

case of RBOB designated as ''any oxygenate,'' or ''ether only,'' or using the assumptions in §§ 80.83(c)(1)(ii) (A) and (B) in the case of RBOB designated as ''any renewable oxygenate,'' ''non VOC controlled renewable ether only,'' or ''renewable ether only'';

(3) Review the product transfer documents for the indication of the type and amount of oxygenate required to be added to the RBOB;

(4) Trace back to the batch or batches in which the RBOB was produced or imported. Obtain refiner's or importer's internal lab analysis for each batch and agree the consistency of the type and volume of oxygenate required to be added to the RBOB with that indicated in applicable tender's product transfer documents;

(5) Agree the sampling and testing frequency of the refiner's or importer's downstream oxygenated blender quality assurance program with the sampling and testing rates as required in § 80.69(a)(7); and

(6) In the case of RBOB designated as ''any renewable oxygenate,'' ''non VOC controlled renewable ether'' or ''renewable ether only'', review the documentation from the producer of the oxygenate to determine if the oxygenate meets the requirements of § 80.83(a).

(f) Select a representative sample of reformulated gasoline and RBOB batches produced by computerized inline blending, and for this sample:

(1) Obtain the composite sample internal laboratory analyses results; and

(2) Agree the results of the internal laboratory analyses to the quarterly batch information submitted to the EPA.

(g) Select a representative sample from the listing of the tenders of conventional gasoline and conventional gasoline blendstock that becomes gasoline through the addition of oxygenate only, and for this sample:

(1) Agree the volumes to the product transfer documents;

(2) For a representative sample of tenders, trace back to the batch or batches in which the gasoline was produced or imported. Obtain the refiner's or importer's internal laboratory analyses for each batch and compare such analyses for consistency with the analyses results reported to EPA; and

(3) Where the refiner or importer has included oxygenate that is blended downstream of the refinery or import facility in its compliance calculations in accordance with § 80.101(d)(4)(ii), obtain a listing of each downstream oxygenate blending operation from which the refiner or importer is claiming oxygenate for use in compliance calculations, and for each such operation:

(i) Determine if the refiner or importer had a contract in place with the downstream blender during the period oxygenate was blended;

(ii) Determine if the refiner or importer has records reflecting that it conducted physical inspections of the downstream blending operation during the period oxygenate was blended;

(iii) Obtain a listing from the refiner or importer of the batches of conventional gasoline or conventional sub-octane blendstock, and the compliance calculations which include oxygenate blended by the downstream oxygenate blender, and test the mathematical accuracy of the calculations contained in this listing;

(iv) Obtain a listing from the downstream oxygenate blender of the oxygenate blended with conventional gasoline or sub-octane blendstock that was produced or imported by the refiner or importer. Test the mathematical accuracy of the calculations in this listing. Agree the overall oxygenate blending listing obtained from the refiner or importer with the listing obtained from the downstream oxygenate blender. Select a representative sample of oxygenate blending listing obtained from the downstream oxygenate blender, and for this sample:

(A) Using product transfer documents, determine if the oxygenate was blended with conventional gasoline or conventional sub-octane blendstock that was produced by the refiner or imported by the importer; and

(B) Agree the oxygenate volume with the refiner's or importer's listing of oxygenate claimed for this gasoline;

(v) Obtain a listing of the sampling and testing conducted by the refiner or importer over the downstream oxygenate blending operation. Select a representative sample of the test results from this listing, and for this sample agree the tested oxygenate volume

with the oxygenate use listings from the refiner or importer, and from the oxygenate blender; and

(vi) Obtain a copy of the records reflecting the refiner or importer audit over the downstream oxygenate blending operation. Review these records for indications that the audit included review of the overall volumes and type of oxygenate purchased and used by the oxygenate blender to be consistent with the oxygenate claimed by the refiner or importer and that this oxygenate was blended with the refiner's or importer's gasoline or blending stock.

[59 FR 7875, Feb. 16, 1994, as amended at 59 FR 36969, July 20, 1994; 59 FR 39292, Aug. 2, 1994; 62 FR 60136, Nov. 6, 1997; 67 FR 8738, Feb. 26, 2002; 70 FR 74574, Dec. 15, 2005]

EFFECTIVE DATE NOTE: At 59 FR 39292, Aug. 2, 1994, § 80.128 was amended by revising paragraphs (a) and (e)(2); removing ''and'' at the end of paragraph (e)(4); removing the period at the end of paragraph (e)(5) and adding ''; and'' in its place; and adding paragraph (e)(6) effective Sep. 1, 1994. At 59 FR 60715, Nov. 28, 1994, the amendment was stayed effective September 13, 1994. At 70 FR 74574, Dec. 15, 2005, § 80.128 was amended by revising paragraphs (e)(2), (e)(4) and (e)(5) and removing paragraph (e)(6); however, the amendment could not be incorporated because those paragraphs are stayed. At 71 FR 26702, May 8, 2006, § 80.128 was amended by revising paragraph (e)(2); however, the amendment could not be incorporated because that paragraph is stayed. At 72 FR 8543, Feb. 26, 2007, § 80.128 was amended by revising paragraph (a); however, the amendment could not be incorporated because that paragraph is stayed.

§ 80.129 [Reserved]

§ 80.130 Agreed upon procedures reports.

(a) *Reports*. (1) The CPA or CIA shall issue to the refiner or importer a report summarizing the procedures performed in the findings in accordance with the attest engagement or internal audit performed in compliance with this subpart.

(2) The refiner or importer shall provide a copy of the auditor's report to the EPA within the time specified in § 80.75(m).

(b) *Record retention*. The CPA or CIA shall retain all records pertaining to the performance of each agreed upon procedure and pertaining to the creation of the agreed upon procedures report for a period of five years from the date of creation and shall deliver such records to the Administrator upon request.

[59 FR 7875, Feb. 16, 1994, as amended at 71 FR 26702, May 8, 2006]

§ 80.131 Agreed upon procedures for GTAB, certain conventional gasoline imported by truck, previously certified gasoline used to produce gasoline, and butane blenders.

(a) *Attest procedures for GTAB*. The following are the attest procedures to be carried out in the case of an importer who imports gasoline classified as blendstock (or ''GTAB'') under the terms of § 80.83:

(1) Obtain a listing of all GTAB volumes imported for the reporting period. Agree the total volume of GTAB from the listing to the inventory reconciliation analysis under § 80.133, or agree to alternative documents if the inventory reconciliation analysis is not sufficient.

(2) Obtain a listing of all GTAB batches reported to EPA by the importer. Agree the total volume of GTAB from the listing to the GTAB volumes reported to EPA. Note that the EPA report includes a notation that the batch is not included in the compliance calculations because the imported product is GTAB. Also, agree these volumes to the Import Summary received from the U.S. Customs Service.

(3) Select a sample, in accordance with the guidelines in § 80.127, from the listing of GTAB batches obtained in paragraph (a)(2) of this section, and for each GTAB batch selected perform the following:

(i) Trace the GTAB batch to the tank activity records. From the tank activity records, determine the volumes of conventional gasoline and of RFG produced. Agree the volumes from the tank activity records to the batch volume reported to the EPA as reformulated or conventional gasoline.

(ii) Agree the location of the refinery represented by the tank activity records obtained in paragraph (a)(3)(i) of this section for the gasoline produced from GTAB, to the location that

the GTAB arrived in the U.S. or at a facility to which GTAB is directly transported from the import facility using records representing location (e.g., U.S. Customs Service entry records). Using product transfer records, trace volumes transported from the import facility directly to the refinery as applicable.

(iii) Obtain tank activity records for all batches of GTAB received and blended. Using the tank activity records, determine whether the GTAB was received into an empty tank, or into a tank containing other GTAB imported by that importer or finished gasoline of the same category as the gasoline that will be produced using the GTAB or into a tank containing blendstock.

(iv) Using the tank activity records obtained under paragraph (a)(3)(iii) of this section, determine the volume of any tank bottom (beginning tank inventory) that is previously certified gasoline before GTAB is added to the tank. Using lab reports, batch reports, or product transfer documents, determine the properties of the tank bottom.

(v) Determine whether the properties and volume of gasoline produced using GTAB were determined in a manner that excludes the volume and properties of any gasoline that previously has been included in any refiners or importers compliance calculations, as follows:

(A) Note documented tank mixing procedures.

(B) Determine the volume and properties of the gasoline contained in the storage tank after blending is complete. Mathematically subtract the volume and properties of the previously certified gasoline to determine the volume and properties of the GTAB plus blendstock added. Agree the volume and properties of the GTAB plus blendstock added to the volume reported to EPA as a batch of gasoline produced; or

(C) In the alternative, using the tank activity records, note that only GTAB and blending components were combined, and that no gasoline was added to the tank. Agree the volumes and properties of the shipments from the tank after the GTAB and blendstock are added, blended, and sampled and tested, to the volumes and properties reported to the EPA by the refiner.

(vi) Obtain the importer's laboratory analysis for each batch of GTAB selected, and agree the properties listed in the corresponding batch report submitted to the EPA, to the laboratory analysis.

(b) *Attest procedures for certain truck imports.* The following are the attest procedures to be carried out in the case of an importer who imports conventional gasoline into the United States by truck using the sampling and testing option in § 80.101(i)(3) (''§ 80.101(i)(3) truck imports'').

(1) Obtain a listing of all volumes of § 80.101(i)(3) truck imports for the reporting period. Agree the total volume of § 80.101(i)(3) truck imports from the listing to the inventory reconciliation analysis under § 80.132.

(2) Obtain a listing of all § 80.101(i)(3) truck import batches reported to EPA by the importer. Agree the total volume of § 80.101(i)(3) truck imports from the listing to the volume of § 80.101(i)(3) truck imports reported to EPA. Also, agree these totals to the Import Summary received from the U.S. Customs Service.

(3) Select a sample, in accordance with the guidelines in § 80.127, from the listing obtained in paragraph (b)(2) of this section, and for each § 80.101(i)(3) truck import batch selected perform the following:

(i) Obtain the copy of the terminal test results for the batch, under § 80.101(i)(3)(iii)(A), and determine that the sample was analyzed using the test methods specified in § 80.46, and agree the terminal test results to the batch properties reported to EPA; and

(ii) Obtain tank activity records for the terminal storage tank showing receipts, discharges, and sampling, and determine that the sample under paragraph (b)(3)(i) of this section was collected subsequent to the most recent receipt into the storage tank.

(4) Obtain listings for each terminal where § 80.101(i)(3) truck import gasoline was loaded, of all quality assurance samples collected by the importer, and for each terminal select a sample in accordance with the guidelines in § 80.127 from the listing. For

each quality assurance sample selected perform the following:

(i) Determine that the sample was analyzed by the importer or by an independent laboratory, and that the analysis was performed using the test methods specified in § 80.46;

(ii) Obtain the terminal's test results that correspond in time to the time the quality assurance sample was collected, and agree the terminal's test results with the quality assurance test results; and

(iii) Determine that the quality assurance sample was collected within the frequency specified in § 80.101(i)(3)(iv)(D).

(c) *Attest procedures for previously certified gasoline*. The following are the attest procedures to be carried out in the case of a refiner who uses previously certified gasoline under the requirements of §§ 80.65(i) and 80.101(g)(9).

(1) Obtain a listing of all batches of previously certified gasoline used under the requirements of § 80.65(i) which were received at the refinery during the reporting period. Agree the total volume of such previously certified gasoline from the listing to the inventory reconciliation analysis under § 80.133, or agree to alternative documents if the inventory reconciliation analysis is not sufficient.

(2) Obtain a listing of all previously certified gasoline batches reported to EPA by the refiner. Agree the total volume of previously certified gasoline from the listing of previously certified gasoline received in paragraph (c)(1) of this section to the volume of previously certified gasoline reported to EPA.

(3) Select a sample, in accordance with the guidelines in § 80.127, from the listing obtained in paragraph (c)(2) of this section, and for each previously certified gasoline batch selected perform the following:

(i) Trace the previously certified gasoline batch to the tank activity records. Confirm that the previously certified gasoline was included in a batch of reformulated or conventional gasoline produced at the refinery.

(ii) Obtain the refiner's laboratory analysis and volume measurement for the previously certified gasoline when received and agree the properties and volume listed in the corresponding batch report submitted to the EPA, to the laboratory analysis and volume measurements.

(iii) Obtain the product transfer documents for the previously certified gasoline when received and agree the designations from the product transfer documents to designations in the corresponding batch report submitted to EPA (reformulated gasoline, RBOB or conventional gasoline, and designations regarding VOC control).

(d) *Attest procedures for butane blenders*. The following are the attest procedures to be carried out by a refiner who blends butane under § 80.82.

(1) Obtain a listing of all butane batches received at the refinery during the reporting period.

(2) Obtain a listing of all butane batches reported to EPA by the refiner for the reporting period. Agree the total volume of butane from the receipt listing to the volume of butane reported to EPA.

(3) Select a sample, in accordance with the guidelines in § 80.127, from the listing of butane batches reported to EPA, and for each butane batch selected perform the following:

(i) Trace the butane included in the batch to the documents provided to the refiner by the butane supplier for the butane. Determine, and report as a finding, whether these documents establish the butane was commercial grade, non-commercial grade, or neither commercial nor non-commercial grade as defined in § 80.82.

(ii) In the case of non-commercial grade butane, obtain the refiner's sampling and testing results for butane, and confirm that the frequency of the sampling and testing was consistent with the requirements in § 80.82.

[70 FR 74574, Dec. 15, 2005]

§ 80.132 [Reserved]

§ 80.133 Agreed-upon procedures for refiners and importers.

The following are the minimum attest procedures that shall be carried out for each refinery and importer. Agreed upon procedures may vary from the procedures stated in this section due to the nature of the refiner's or importer's business or records, provided

that any refiner or importer desiring to use modified procedures obtains prior approval from EPA.

(a) *EPA reports.* (1) Obtain and read a copy of the refinery's or importer's reports (except for batch reports) filed with the EPA as required by §§ 80.75 and 80.105 for the reporting period.

(2) In the case of a refiner's report to EPA that represents aggregate calculations for more than one refinery, obtain the refinery-specific volume and property information that was used by the refiner to prepare the aggregate report. Foot and crossfoot the refinery-specific totals and agree to the values in the aggregate report. The procedures in paragraphs (b) through (m) of this section then are performed separately for each refinery.

(3) Obtain a written representation from a company representative that the report copies are complete and accurate copies of the reports filed with the EPA.

(4) Identify, and report as a finding, the name of the commercial computer program used by the refiner or importer to track the data required by the regulations in this part, if any.

(b) *Inventory reconciliation analysis.* Obtain an inventory reconciliation analysis for the refinery or importer for the reporting period by product type (i.e., reformulated gasoline, RBOB, conventional gasoline, and non-finished-gasoline petroleum products), and perform the following:

(1) Foot and crossfoot the volume totals reflected in the analysis; and

(2) Agree the beginning and ending inventory amounts in the analysis to the refinery's or importer's inventory records. If the analysis shows no production of conventional gasoline or if the refinery or importer represents under paragraph (l) of this section that it has a baseline less stringent or equal to the statutory baseline, the analysis may exclude non-finished-gasoline petroleum products.

(3) Report as a finding the volume totals for each product type.

(c) *Listing of tenders.* For each product type other than non-finished gasoline petroleum products (i.e., reformulated gasoline, RBOB, conventional gasoline), obtain a separate listing of all tenders from the refinery or importer for the reporting period. Each listing should provide for each tender the volume shipped and other information as needed to distinguish tenders. Perform the following:

(1) Foot to the volume totals per the listings; and

(2) For each product type listed in the inventory reconciliation analysis obtained in paragraph (b) of this section, agree the volume total on the listing to the tender volume total in the inventory reconciliation analysis.

(d) *Listing of batches.* For each product type other than non-finished gasoline petroleum products (i.e., reformulated gasoline, RBOB, and conventional gasoline), obtain separate listings of all batches reported to the EPA and perform the following:

(1) Foot to the volume totals per the listings; and

(2) Agree the total volumes in the listings to the production volume in the inventory reconciliation analysis obtained in paragraph (b) of this section.

(e) *Reformulated gasoline tenders.* Select a sample, in accordance with the guidelines in § 80.127, from the listing of reformulated gasoline tenders obtained in paragraph (c) of this section, and for each tender selected perform the following:

(1) Obtain product transfer documents associated with the tender and agree the volume on the tender listing to the volume on the Product transfer documents; and

(2) Note whether the product transfer documents evidencing the date and location of the tender and the compliance model designations for the tender (VOC-controlled for Region 1 or 2, non VOC-controlled, and simple or complex model certified).

(f) *Reformulated gasoline batches.* Select a sample, in accordance with the guidelines in § 80.127, from the listing of reformulated gasoline batches obtained in paragraph (d) of this section, and for each batch selected perform the following:

(1) Agree the volume shown on the listing, to the volume listed in the corresponding batch report submitted to EPA; and

(2) Obtain the refinery's or importer's laboratory analysis and agree the properties listed in the corresponding batch report submitted to EPA, to the properties listed in the laboratory analysis.

(g) *RBOB tenders.* Select a sample, in accordance with the guidelines in § 80.127, from the listing of RBOB tenders obtained in paragraph (c) of this section, and for each tender selected perform the following:

(1) Obtain product transfer documents associated with the tender and agree the volume on the tender listing to the volume on the product transfer documents; and

(2) Inspect the product transfer documents evidencing the type and amount of oxygenate to be added to the RBOB.

(h) *RBOB batches.* Select a sample, in accordance with the guidelines in § 80.127, from the listing of RBOB batches obtained in paragraph (d) of this section, and for each batch selected perform the following:

(1) Obtain from the refiner or importer the oxygenate type and volume, and oxygen volume required to be hand blended with the RBOB, in accordance with § 80.69(a)(2).

(2) Agree the volume shown on the listing, as adjusted to reflect the oxygenate volume determined under paragraph (h)(1) of this section, to the volume listed in the corresponding batch report submitted to EPA; and

(3) Obtain the refinery's or importer's laboratory analysis of the RBOB hand blend and agree:

(i) The oxygenate type and oxygen amount determined under paragraph (h)(1) of this section, to the tested oxygenate type and oxygen amount listed in the laboratory analysis within the acceptable ranges set forth at § 80.65(e)(2)(i); and

(ii) The properties listed in the corresponding batch report submitted to EPA to the properties listed in the laboratory analysis.

(4) Perform the following procedures for each batch report included in paragraph (h)(4)(i)(B) of this section:

(i) Obtain and inspect a copy of the executed contract with the downstream oxygenate blender (or with an intermediate owner), and confirm that the contract:

(A) Was in effect at the time of the corresponding RBOB transfer; and

(B) Allowed the company to sample and test the reformulated gasoline made by the blender.

(ii) Obtain a listing of RBOB blended by downstream oxygenate blenders and the refinery's or importer's oversight test results, and select a representative sample, in accordance with the guidelines in § 80.127, from the listing of test results and for each test selected perform the following:

(A) Obtain the laboratory analysis for the batch, and agree the type of oxygenate used and the oxygenate content appearing in the laboratory analysis to the instructions stated on the product transfer documents corresponding to a RBOB receipt immediately preceding the laboratory analysis and used in producing the reformulated gasoline batch selected within the acceptable ranges set forth at § 80.65(e)(2)(i);

(B) Calculate the frequency of sampling and testing or the volume blended between the test selected and the next test; and

(C) Agree the frequency of sampling and testing or the volume blended between the test selected and the next test to the sampling and testing frequency rates stated in § 80.69(a)(7).

(i) *Conventional gasoline and conventional gasoline blendstock tenders.* Select a sample, in accordance with the guidelines in § 80.127, from the listing of the tenders of conventional gasoline and conventional gasoline blendstock that becomes gasoline through the addition of oxygenate only, and for each tender selected perform the following:

(1) Obtain product transfer documents associated with the tender and agree the volume on the tender listing to the volume on the product transfer documents; and

(2) Inspect the product transfer documents evidencing that the information required in § 80.106(a)(1)(vii) is included.

(j) *Conventional gasoline batches.* Select a sample, in accordance with the guidelines in § 80.127, from the conventional gasoline batch listing obtained in paragraph (d) of this section, and for each batch selected perform the following:

(1) Agree the volume shown on the listing, to the volume listed in the corresponding batch report submitted to EPA; and

(2) Obtain the refinery's or importer's laboratory analysis and agree the properties listed in the corresponding batch report submitted to EPA, to the properties listed in the laboratory analysis.

(k) *Conventional gasoline oxygenate blending*. Obtain a listing of each downstream oxygenate blending facility and its blender, as represented by the refiner/importer, as adding oxygenate used in the compliance calculations for the refinery or importer, or a written representation from the refiner for the refinery or importer that it has not used any downstream oxygenate blending in its conventional gasoline compliance calculations.

(1) For each downstream oxygenate blender facility, obtain a listing from the refiner or importer of the batches of oxygenate included in its compliance calculations added by the downstream oxygenate blender and foot to the total volume of batches per the listing;

(2) Obtain a listing from the downstream oxygenate blender of the oxygenate blended with conventional gasoline or sub-octane blendstock that was produced or imported by the refinery or importer and perform the following:

(i) Foot to the total volume of the oxygenate batches per the listing; and

(ii) Agree the total volumes in the listing obtained from the downstream oxygenate blender, to the listing obtained from the refiner or importer in paragraph (k)(1) of this section.

(3) Where the downstream oxygenate blender is a person other than the refiner or importer, as represented by management of the refinery or importer, perform the following:

(i) Obtain the contract from the refiner or importer with the downstream blender and inspect the contract evidencing that it covered the period when oxygenate was blended;

(ii) Obtain company documents evidencing that the refiner or importer has records reflecting that it conducted physical inspections of the downstream blending operation during the period oxygenate was blended;

(iii) Obtain company documents reflecting the refiner or importer audit over the downstream oxygenate blending operation and note whether these records evidencing the audit included a review of the overall volumes and type of oxygenate purchased and used by the oxygenate blender to be consistent with the oxygenate claimed by the refiner or importer, and that this oxygenate was blended with the refinery's or importer's gasoline or blending stock; and

(iv) Obtain a listing of test results for the sampling and testing conducted by the refiner or importer over the downstream oxygenate blending operation, and select a sample, in accordance with the guidelines in § 80.127, from this listing. For each test selected, agree the tested oxygenate volume with the oxygenate volume in the listing obtained from the oxygenate blender in paragraph (k)(2) of this section for this gasoline.

[70 FR 74576, Dec. 15, 2005, as amended at 71 FR 26702, May 8, 2006]

§§ 80.134–80.135 [Reserved]

Subpart G—Detergent Gasoline

SOURCE: 59 FR 54706, Nov. 1, 1994, unless otherwise noted.

§ 80.140 Definitions.

The definitions in this section apply only to subpart G of this part. Any terms not defined in this subpart shall have the meaning given them in 40 CFR part 80, subpart A, or, if not defined in 40 CFR part 80, subpart A, shall have the meaning given them in 40 CFR part 79, subpart A.

Additization means the addition of detergent to gasoline or post-refinery component in order to create detergent-additized gasoline or detergent-additized post-refinery component.

Automated detergent blending facility means any facility (including, but not limited to, a truck or individual storage tank) at which detergent is blended with gasoline or post-refinery component, by means of an injector system calibrated to automatically deliver a prescribed amount of detergent.

Base gasoline means any gasoline that does not contain detergent.

Carburetor deposits means the deposits formed in the carburetor during operation of a carburetted gasoline engine which can disrupt the ability of the carburetor to maintain the proper air/fuel ratio.

Carrier of detergent means any distributor of detergent who transports or stores or causes the transportation or storage of detergent without taking title to or otherwise having any ownership of the detergent, and without altering either the quality or quantity of the detergent.

Deposit control effectiveness means the ability of a detergent additive package to prevent the formation of deposits in gasoline engines.

Deposit control efficiency means the degree to which a detergent additive package at a given concentration in gasoline is effective in limiting the formation of deposits. The addition of inactive ingredients to a detergent additive package, to the extent that this addition dilutes the concentration of the detergent-active components, reduces the deposit control efficiency of the package.

Detergent additive package means any chemical compound or combination of chemical compounds, including carrier oils, that may be added to gasoline, or to post-refinery component blended with gasoline, in order to control deposit formation. Carrier oil means an oil that may be added to the package to mediate or otherwise enhance the detergent chemical's ability to control deposits. A detergent additive package may contain non-detergent-active components such as corrosion inhibitors, antioxidants, metal deactivators, and handling solvents.

Detergent blender means any person who owns, leases, operates, controls or supervises the blending operation of a detergent blending facility, or imports detergent-additized gasoline or detergent-additized post-refinery component.

Detergent blending facility means any facility (including, but not limited to, a truck or individual storage tank) at which detergent is blended with gasoline or post-refinery component.

Detergent-active components means the components of a detergent additive package which act to prevent the formation of deposits, including, but not necessarily limited to, the actual detergent chemical and any carrier oil (if present) that acts to enhance the detergent's ability to control deposits.

Detergent-additized gasoline (also called *detergent gasoline*) means any gasoline that contains base gasoline and detergent.

Detergent-additized post-refinery component means any post-refinery component that contains detergent.

Distributor of detergent means any person who transports or stores or causes the transportation or storage of detergent at any point between its manufacture and its introduction into gasoline.

Fuel injector deposits (also known as *port fuel injector deposits* or *PFID*) means the deposits formed on fuel injector(s) during and after operation of a gasoline engine, as evaluated by the reduction in the gasoline flow rate through the fuel injector(s).

Gasoline means any fuel for use in motor vehicles and motor vehicle engines, including both highway and off-highway vehicles and engines, and commonly or commercially known or sold as gasoline. The term ''gasoline'' is inclusive of base gasoline, detergent gasoline, and base gasoline or detergent gasoline that has been commingled with post-refinery component.

Hand blending detergent facility means any facility (including, but not limited to, a truck or individual storage tank) at which detergent is blended with gasoline or post-refinery component by the manual addition of detergent, or at which detergent is blended with these substances by any means that is not automated.

Intake valve deposits (*IVD*) means the deposits formed on the intake valve(s) during operation of a gasoline engine, as evaluated by weight.

Leaded gasoline means gasoline which is produced with the use of any lead additive or which contains more than 0.05 gram of lead per gallon or more than 0.005 gram of phosphorus per gallon.

Manufacturer of detergent means any person who owns, leases, operates, controls, or supervises a facility that manufactures detergent. Pursuant to the definition in 40 CFR 79.2(f), a manufacturer of detergent is also considered an additive manufacturer.

Post-refinery component means any gasoline blending stock or any oxygenate which is blended with gasoline subsequent to the gasoline refining process.

Repeatability of a test method means the amount of random error which is expected to affect the results obtained for a given test substance, when the test is replicated by a single operator in a given laboratory within a short period of time, using the same apparatus under constant operating conditions. Quantitatively, it is the difference between two such single results that would be exceeded in the long run in only one out of twenty normal and correct replications of the test method.

[59 FR 54706, Nov. 1, 1994, as amended at 61 FR 35356, July 5, 1996]

§ 80.141 Interim detergent gasoline program.

(a) *Effective dates of requirements.* (1) Until June 30, 1997, the products listed in paragraphs (a)(1)(i) through (iii) of this section must comply with either the interim program requirements described in this section or the certification program requirements described in § 80.161. Beginning July 1, 1997, the listed products must comply with the requirements in § 80.161. These dates and requirements apply to:

(i) All gasoline sold or transferred to a party who sells or transfers gasoline to the ultimate consumer;

(ii) All additized post-refinery component (PRC); and

(iii) All detergent additives sold or transferred for use in gasoline or PRC for compliance with the requirements of this subpart.

(2) Until July 31, 1997, all gasoline sold or transferred to the ultimate consumer must contain detergent additive(s) meeting either the interim requirements of this § 80.141 or the certification program requirements of § 80.161. Beginning August 1, 1997, such gasoline must contain detergent additive(s) meeting the certification requirements of § 80.161.

(b) *Applicability of gasoline and PRC detergency requirement; responsible parties.* (1) Except as specifically exempted in § 80.160, the detergency requirements of this subpart apply to all gasoline, whether intended for on-highway or nonroad use, including conventional, reformulated, oxygenated, and leaded gasolines, as well as the gasoline component of fuel mixtures of gasoline and alcohol fuels, gasoline used as marine fuel, gasoline service accumulation fuel (as described in § 86.113–94(a)(1) of this chapter), the gasoline component of fuel mixtures of gasoline and methanol used for service accumulation in flexible fuel vehicles (as described in § 86.113–94(d) of this chapter), gasoline used for factory fill purposes, and all additized PRC.

(2) Pursuant to paragraphs (c) through (f) of this section, compliance with these requirements is the responsibility of parties who directly or indirectly sell or dispense gasoline to the ultimate consumer as well as parties who manufacture, supply, or transfer detergent additives or detergent-additized post-refinery components.

(c) *Detergent registration requirements.* To be eligible for use by fuel manufacturers in complying with the gasoline detergency requirements of this subpart, a detergent additive package must be registered by its manufacturer under 40 CFR part 79 according to the specifications in paragraphs (c) (1) through (3) of this section. After evaluating the adequacy of registration data provided by the detergent manufacturer pursuant to these requirements, if EPA finds the data to be deficient, EPA may disqualify the detergent package for use in complying with the gasoline detergency requirements of this subpart, under the provisions of paragraph (g) of this section.

(1) *Compositional data.* The compositional data supplied to EPA by the additive manufacturer for purpose of registering a detergent additive package under § 79.21(a) of this chapter must include:

(i) A complete listing of the components of the detergent additive package, using standard chemical nomenclature when possible or providing the chemical structure of any component for which the standard chemical name is not precise. Polymeric components may be reported as the product of other chemical reactants, provided that the supporting data specified in § 80.162(b) is also reported for such components.

(ii) The weight and/or volume percent (as applicable) of each component of the package, with variability in these amounts restricted according to the provisions of paragraph (c)(2) of this section.

(iii) For each detergent-active component of the package, classification into one of the following designations:

(A) Polyalkyl amine;

(B) Polyether amine;

(C) Polyalkylsuccinimide;

(D) Polyalkylaminophenol;

(E) Detergent-active carrier oil; and

(F) Other detergent-active component.

(2) *Allowable variation in compositional data.* (i) A single detergent additive registration may contain no variation in the identity of any of the detergent-active components identified pursuant to paragraph (c)(1)(iii) of this section.

(ii) A single detergent additive registration may specify a range of concentrations for identified detergent-active components, provided that, if each such component were present in the detergent additive package at the lower bound of its reported range of concentration, the minimum recommended concentration reported in accordance with the requirements of paragraph (c)(3) of this section would still provide the deposit control effectiveness claimed by the detergent registrant.

(iii) The identity or concentration of non-detergent-active components of the detergent additive package may vary under a single registration, provided that the range of such variation is specified in the registration, and that such variability does not reduce the deposit control effectiveness of the additive package as compared with the level of effectiveness claimed by the detergent registrant pursuant to the requirements of paragraph (c)(3) of this section.

(iv) Except as provided in paragraph (c)(2)(v) of this section, detergent additive packages which do not satisfy these restrictions must be separately registered. EPA may disqualify an additive for use in satisfying the requirements of this subpart if EPA determines that the variability included within a given detergent additive registration may reduce the deposit control effectiveness of the detergent package such that it could invalidate the minimum recommended concentration reported in accordance with the requirements of paragraph (c)(3) of this section.

(v) A change in minimum concentration requirements resulting from a modification of detergent additive composition shall not require a new detergent additive registration or a change in existing registration if:

(A) The modification is effected by a detergent blender only for its own use or for the use of parties which are subsidiaries of, or share common ownership with, the blender, and the modified detergent is not sold or transferred to other parties; and

(B) The modification is a dilution of the additive for the purpose of ensuring proper detergent flow in cold weather; and

(C) Gasoline is the only diluting agent used; and

(D) The diluted detergent is subsequently added to gasoline at a rate that attains the detergent's registered minimum recommended concentration, taking into account the dilution; and

(E) EPA is notified, either before or within seven days after the dilution action, of the identity of the detergent, the identity of the diluting material, the amount or percentage of the dilution, the change in treat rate necessitated by the dilution, and the locations and time period of diluted detergent usage. The notification shall be sent or faxed to the address in § 80.174(c).

(3) *Minimum recommended concentration.* (i) The lower boundary of the recommended range of concentration for the detergent additive package in gasoline, which the additive manufacturer must report pursuant to the registration requirements in § 79.21(d) of this chapter, must equal or exceed the minimum concentration which the manufacturer has determined to be necessary for the control of deposits in the associated fuel type, pursuant to paragraph (e) of this section. The minimum recommended concentration shall be provided to EPA in units of gallons of

detergent additive package per thousand gallons of gasoline or PRC, reported to four digits. This concentration is the lowest additive concentration (LAC) referred to elsewhere in this subpart.

(ii) The minimum concentration reported in the detergent registration according to the provisions of paragraph (c)(3)(i) of this section must also be communicated in writing by the additive manufacturer to each fuel manufacturer who purchases the subject detergent for purpose of compliance with the gasoline detergency requirements of this subpart, and to any additive manufacturer who purchases the subject additive with the intent of reselling it to a fuel manufacturer for this purpose.

(iii) Pursuant to the requirements of paragraph (e) of this section, EPA may require the additive manufacturer to submit data to support the deposit control effectiveness of the detergent package at the specified minimum effective concentration. EPA may disqualify an additive for use in satisfying the requirements of this subpart upon finding that the supporting data is inadequate. Manufacturers may be subject to the liabilities and enforcement actions in §§ 80.156 and 80.159 if such a finding is made.

(iv) Once included in the registration for a detergent additive package, the minimum concentration recommended by the detergent manufacturer to detergent blenders and other users of the detergent additive, pursuant to paragraph (c)(3)(ii) of this section, may not be changed without first notifying EPA. The notification must be sent by certified mail to the address specified in § 80.174(b). Changes to the minimum recommended concentration must be supported by available test data pursuant to paragraph (c)(3)(iii) of this section.

(v) A manufacturer may use a single set of test data to demonstrate the deposit control effectiveness of more than one registered detergent additive product, provided that:

(A) The additive products contain all of the same detergent-active components and no detergent-active components other than those contained in common; and

(B) The minimum concentration recommended for the use of each such additive product is specified such that, when each additive product is mixed in gasoline at the recommended concentration, each of its detergent-active components will be present at a final concentration no less than the lowest concentration for that component shown to be effective by the data available for the tested additive product.

(d) The rate at which a detergent blender treats gasoline with a detergent additive package must be no less than the minimum recommended concentration reported for the subject detergent additive pursuant to paragraph (c)(3) of this section, except under the following conditions:

(1) If a detergent blender believes that the minimum treat rate recommended by the manufacturer of a detergent additive exceeds the amount of detergent actually required for effective deposit control, and possesses substantiating data consistent with the guidelines in paragraph (e) of this section, then, upon informing EPA in writing of these circumstances, the detergent blender may use the detergent at a lower concentration.

(2) The notification to EPA must clearly specify the name of the detergent product and its manufacturer, the concentration recommended by the detergent manufacturer, and the lower concentration which the detergent blender intends to use. The notification must also attest that data are available to substantiate the deposit control effectiveness of the detergent at the intended lower concentration. The notification must be sent by certified mail to the address specified in § 80.174(b).

(3) At its discretion, EPA may require that the detergent blender submit the test data purported to substantiate the claimed effectiveness of the lower concentration of the detergent additive. EPA may also require the manufacturer of the subject detergent additive to submit test data substantiating the minimum recommended concentration specified in the detergent additive registration. In either case, EPA will send a letter to the appropriate party, and the supporting data will be due to EPA within 30 days of receipt of EPA's letter.

(i) If the detergent blender fails to submit the required supporting data to EPA in the allotted time period, or if EPA judges the submitted data to be inadequate to support the detergent blender's claim that the lower concentration provides a level of deposit control consistent with the requirements of this section, then EPA will disapprove the use of the detergent at the lower concentration. Further, the detergent blender may be subject to applicable liabilities and penalties pursuant to §§ 80.156 and 80.159 for any gasoline or PRC it has additized at the lower concentration.

(ii) If the detergent manufacturer fails to submit the required test data to EPA within the allotted time period, EPA will proceed on the assumption that data are not available to substantiate the minimum recommended concentration specified in the detergent registration, and the subject additive may be disqualified for use in complying with the requirements of this subpart, pursuant to the procedures in paragraph (g) of this section. The detergent manufacturer may also be subject to applicable liabilities and penalties pursuant to §§ 80.156 and 80.159.

(iii) If both parties submit the required information, EPA will evaluate the quality and results of both sets of test data in relation to each other and to industry-consensus test practices and standards, in a manner consistent with the guidelines described in paragraph (e) of this section. EPA will approve or disapprove the use of the detergent at the lower concentration, and will inform both the detergent blender and the detergent manufacturer of the results of its analysis within 60 days of receipt of both sets of data.

(e) *Demonstration of deposit control efficiency*. At its discretion, EPA may require a detergent additive registrant to provide test data to support the deposit control effectiveness of a detergent at the minimum concentration recommended, pursuant to paragraph (c)(3) of this section and § 79.21(d) of this chapter. The required supporting data must be submitted to EPA within 30 days of receipt of EPA's request. EPA will notify the submitter, within 60 days after receiving the supporting data, whether the data is adequate to support the deposit control efficiency claimed. Subject to the procedures specified in paragraph (g) of this section, if the supporting data are not submitted or if EPA finds the data insufficient, the detergent may be disqualified for use by fuel manufacturers in complying with the requirements of this subpart. EPA will use the following guidelines in determining the adequacy of the supporting data:

(1) *CARB-based supporting test data*. For detergent additives which are certified by the California Air Resources Board (CARB) for use in the State of California (pursuant to Title 13, section 2257 of the California Code of Regulations), the CARB certification data constitutes adequate support of the detergent's effectiveness under this section, with the exception that CARB detergent certification data specific to California Phase II reformulated gasoline (pursuant to Title 13, Chapter 5, Article 1, Subarticle 2, California Code of Regulations, Standards for Gasoline Sold Beginning March 1, 1996) will not be considered adequate support for detergent effectiveness in gasolines that do not conform to the compositional specifications for California's Phase II reformulated gasoline. For CARB-based supporting data to be used to demonstrate detergent performance, the minimum recommended concentration reported in the detergent additive registration must be no less than the concentration of the detergent-active components reported in the subject CARB detergent certification.

(2) EPA will evaluate the adequacy of other supporting data according to the following guidelines:

(i) Test fuel guidelines.

(A) The gasoline used in the supporting tests must contain the detergent-active components of the subject detergent additive package in an amount which corresponds to the minimum recommended concentrations recorded in the respective detergent registration, or less than this amount.

(B) The test fuels must not contain any detergent-active components other than those recorded in the subject detergent registration.

(C) The test fuels used must be reasonably typical of in-use fuels in their tendency to form deposits. Test fuel

taken directly from commercial refinery production stock is acceptable. Specially refined low-deposit-forming fuels such as indolene are not acceptable. Other specially blended test fuels will be evaluated by EPA for acceptability based on the extent to which such fuels adequately represent the deposit-forming tendency of typical (average) in-use fuels, as reflected in the levels of the following fuel parameters: sulfur content, aromatic content, olefin content, T–90, and oxygenate content.

(D) The composition of the blended test fuel(s) used in carburetor deposit control testing, conducted to support the claimed effectiveness of detergents used in leaded gasoline, should be reasonably typical of in-use gasoline in its tendency to form carburetor deposits (or more severe than typical in-use fuels) as defined by the olefin and sulfur content. Test data using leaded fuels is preferred for this purpose, but data collected using unleaded fuels may also be acceptable provided that some correlation with additive performance in leaded fuels is available.

(ii) Test procedure guidelines.

(A) To be acceptable, test data submitted to support the deposit control effectiveness of a detergent additive must derive from testing conducted in conformity with good engineering practices.

(B) For demonstration of fuel injector and intake valve deposit control performance, the tests specified in §§ 80.165, or other vehicle-based tests using generally accepted industry procedures and standards, are preferred. Engine-based tests may also be acceptable, assuming a reasonable correlation with vehicle-based tests and standards can be demonstrated. Bench test data may be acceptable to demonstrate fuel injector deposit control performance, assuming the results can be correlated with vehicle- or engine-based tests and standards. Bench testing will not be considered acceptable for demonstration of IVD control performance. Examples of acceptable test procedures are contained in the following references:

(*1*) Intake Valve Deposit Test Procedures:

(*i*) ''Intake Valve Deposits—Fuel Detergency Requirements Revisited'', Bill Bitting et al., Society of Automotive Engineers, SAE Technical Paper No. 872117, 1987.[1]

(*ii*) ''BMW—10,000 Miles Intake Valve Test Procedure'', March 1, 1991, Section 2257, Title 13, California Code of Regulations.

(*iii*)

(*iv*) ''Effect on Intake Valve Deposits of Ethanol and Additives Common to the Available Ethanol Supply'', Clifford Shilbolm et al., SAE Technical Paper Series No. 902109, 1990.

(*2*) Fuel Injector Deposit Test Procedures:

(*i*) ''Test Method for Evaluating Port Fuel Injector (PFI) Deposits in Vehicle Engines'', March 1, 1991, Section 2257, Title 13, California Code of Regulations.

(*ii*) ''A Vehicle Test Technique for Studying Port Fuel Injector Deposits—A Coordinating Research Council Program'', Robert Tupa et al., SAE Technical paper No. 890213, 1989.

(*iii*) ''The Effects of Fuel Composition and Additives on Multiport Fuel Injector Deposits'', Jack Benson et al., SAE Technical Paper Series No. 861533, 1986.

(*iv*) ''Injector Deposits—The Tip of Intake System Deposit Problems'', Brian Taneguchi, et al., SAE Technical Paper Series No. 861534, 1986.

(C) For demonstration of carburetor deposit control performance, any generally accepted vehicle, engine, or bench test procedure for carburetor deposit control will be considered adequate. Port and throttle body fuel injector deposit control test data will also be considered to be adequate demonstration of an additive's ability to control carburetor deposits. Examples of acceptable test procedures for demonstration of carburetor deposit control, in addition to the fuel injector test procedures listed above in paragraph (e)(2)(ii)(B)(*2*) of this section, are contained in the following references:

(*1*) ''Fuel Injector, Intake Valve, and Carburetor Detergency Performance of Gasoline Additives'', C.H. Jewitt et al., SAE Technical Paper No. 872114, 1987.

[1] Society of Automotive Engineers (SAE), 400 Commonwealth Drive, Warrendale, PA 15096–0001.

[2] [Reserved]

(*2*) ''Carburetor Cleanliness Test Procedure, State-of-the-Art Summary, Report: 1973–1981'', Coordinating Research Council, CRC Report No. 529.[3]

(f) *Detergent identification test procedure.* (1) At its discretion, EPA may require the additive registrant to submit an analytical procedure capable of identifying the detergent additive in its pure state. The test procedure will be due to EPA within 30 days of the registrant's receipt of the request. Subject to the provisions in paragraph (g) of this section, if the registrant fails to submit an analytical procedure, or if EPA judges a submitted procedure to be inadequate, EPA may deny or withdraw the detergent's eligibility to be used to satisfy the detergency requirements in this section.

(2) The analytical procedure submitted by the registrant must be able to both qualitatively and quantitatively identify each component of the detergent additive package. To be acceptable, the procedure must provide results that conform to reasonable and customary standards of repeatability and reproducibility, and reasonable and customary limits of detection and accuracy, for the type of test in question.

(3) A fourier transform infrared spectroscopy (FTIR)-based procedure, including an actual infrared spectrum of the detergent additive package and each component part of the detergent package obtained from this test method, is preferred.

(g) *Disqualification of a detergent additive package.* (1) When EPA makes a preliminary determination that a detergent additive registrant has failed to comply with the requirements of paragraph (c), (d)(3)(ii), (e), or (f) of this section, either by failing to submit required information for a subject detergent additive or by submitting information which EPA deems inadequate, EPA shall notify the additive registrant by certified mail, return receipt requested, setting forth the basis for that determination and informing the registrant that the detergent may lose its eligibility to be used to comply with the detergency requirements of this section.

(2) If EPA determines that the detergent registration was created by fraud or other misconduct, such as a negligent disregard for the truthfulness or accuracy of the required information or of the application, the detergent registration will be considered void *ab initio* and the revocation of qualification will be retroactive to January 1, 1995 or the date on which the additive product was first registered, whichever is later.

(3) The registrant will be afforded 60 days from the date of receipt of the notice of intent of detergent disqualification to submit written comments concerning the notice, and to demonstrate or achieve compliance with the specific data requirements which provide the basis for the proposed disqualification. If the registrant does not respond in writing within 60 days from the date of receipt of the notice of intent of disqualification, the detergent disqualification shall become final by operation of law and the Administrator shall notify the registrant of such disqualification. If the registrant responds in writing within 60 days from the date of receipt of the notice of intent to disqualify, the Administrator shall review and consider all comments submitted by the registrant before taking final action concerning the proposed disqualification. All correspondence regarding a disqualification must be sent to the address specified in § 80.174(b).

(4) As part of a written response to a notice of intent to disqualify, a registrant may request an informal hearing concerning the notice. Any such request shall state with specificity the information the registrant wishes to present at such a hearing. If an informal hearing is requested, EPA shall schedule such a hearing within 90 days from the date of receipt of the request. If an informal hearing is held, the subject matter of the hearing shall be confined solely to whether or not the registrant has complied with the specific data requirements which provide the basis for the proposed disqualification. If an informal hearing is held, the designated presiding officer may be any EPA employee, the hearing procedures shall be informal, and the hearing shall

[3] Coordinating Research Council Inc. (CRC), 219 perimeter Center Parking, Atlanta, Georgia, 30346.

not be subject to or governed by 40 CFR part 22 or by 5 U.S.C. 554, 556, or 557. A verbatim transcript of each informal hearing shall be kept and the Administrator shall consider all relevant evidence and arguments presented at the hearing in making a final decision concerning a proposed cancellation.

(5) If a registrant who has received a notice of intent to disqualify submits a timely written response, and the Administrator decides after reviewing the response and the transcript of any informal hearing to disqualify the detergent for use in complying with the requirements of this subpart, the Administrator shall issue a final disqualification order, forward a copy of the disqualification order to the registrant by certified mail, and promptly publish the disqualification order in the FEDERAL REGISTER. Any disqualification order issued after receipt of a timely written response by the registrant shall become legally effective five days after it is published in the FEDERAL REGISTER.

(6) Upon making a final decision to disqualify a detergent additive package pursuant to this paragraph (g), EPA shall inform all fuel manufacturers and secondary additive manufacturers whose product registrations report the potential use of the disqualified detergent that such detergent is no longer eligible for compliance with the requirements of this subpart. Such fuel manufacturers and secondary additive manufacturers shall have 45 days in which to stop using the ineligible detergent additive package and substitute an eligible detergent additive. When applicable, EPA shall also notify such parties that the detergent registration had been created by fraud or other misconduct, pursuant to paragraph (g)(2) of this section.

[59 FR 54706, Nov. 1, 1994, as amended at 61 FR 35356, July 5, 1996; 61 FR 58747, Nov. 18, 1996]

§§ 80.142–80.154 [Reserved]

§ 80.155 Interim detergent program controls and prohibitions.

(a)(1) No person shall sell, offer for sale, dispense, supply, offer for supply, transport, or cause the transportation of gasoline to the ultimate consumer for use in motor vehicles or in any off-road engines (except as provided in § 80.160), or to a gasoline retailer or wholesale purchaser-consumer, and no person shall detergent-additize gasoline, unless such gasoline is additized in conformity with the requirements of § 80.141. No person shall cause the presence of any gasoline in the gasoline distribution system unless such gasoline is additized in conformity with the requirements of § 80.141.

(2) Gasoline has been additized in conformity with the requirements of § 80.141 when the detergent component satisfies the requirements of § 80.141 and when:

(i) The gasoline has been additized in conformity with the detergent composition and purpose-in-use specifications of an applicable detergent registered under 40 CFR part 79, and in accordance with at least the minimum concentration specifications of that detergent as registered under 40 CFR part 79 or as otherwise provided under § 80.141(d); or

(ii) The gasoline is composed of two or more commingled gasolines and each component gasoline has been additized in conformity with the detergent composition and purpose-in-use specifications of a detergent registered under 40 CFR part 79, and in accordance with at least the minimum concentration specifications of that detergent as registered under 40 CFR part 79 or as otherwise provided under § 80.141(d); or

(iii) The gasoline is composed of a gasoline commingled with a post-refinery component (PRC), and both of these components have been additized in conformity with the detergent composition and use specifications of a detergent registered under 40 CFR part 79, and in accordance with at least the minimum concentration specifications of that detergent as registered under 40 CFR part 79 or as otherwise provided under § 80.141(d).

(b) No person shall blend detergent into gasoline or PRC unless such person complies with the volumetric additive reconciliation requirements of § 80.157.

(c) No person shall sell, offer for sale, dispense, supply, offer for supply, store,

transport, or cause the transportation of any gasoline, detergent, or detergent-additized PRC unless the product transfer document for the gasoline, detergent or detergent-additized PRC complies with the requirements of § 80.158.

(d) No person shall refine, import, manufacture, sell, offer for sale, dispense, supply, offer for supply, store, transport, or cause the transportation of any detergent that is to be used as a component of detergent-additized gasoline or detergent-additized PRC, unless such detergent conforms with the composition specifications of a detergent registered under 40 CFR part 79 and the detergent otherwise complies with the requirements of § 80.141. No person shall cause the presence of any detergent in the detergent, PRC, or gasoline distribution systems unless such detergent complies with the requirements of § 80.141.

(e)(1) No person shall sell, offer for sale, dispense, supply, offer for supply, transport, or cause the transportation of detergent-additized PRC, unless the PRC has been additized in conformity with the requirements of § 80.141. No person shall cause the presence in the PRC or gasoline distribution systems of any detergent-additized PRC that fails to conform to the requirements of § 80.141.

(2) PRC has been additized in conformity with the requirements of § 80.141 when the detergent component satisfies the requirements of § 80.141 and:

(i) The PRC has been additized in accordance with the detergent composition and use specifications of a detergent registered under 40 CFR part 79, and in accordance with at least the minimum concentration specifications of that detergent as registered under 40 CFR part 79 or as otherwise provided under § 80.141(d); or

(ii) The PRC is composed of two or more commingled PRCs, and each component has been additized in accordance with the detergent composition and use specifications of a detergent registered under 49 CFR part 79, and in accordance with at least the minimum concentration specifications of that detergent as registered under 40 CFR part 79 or as otherwise provided under § 80.141(d).

[61 FR 35358, July 5, 1996]

§ 80.156 Liability for violations of the interim detergent program controls and prohibitions.

(a) *Persons liable*—(1) *Gasoline nonconformity*. Where gasoline contained in any storage tank at any facility owned, leased, operated, controlled or supervised by any gasoline refiner, importer, carrier, distributor, reseller, retailer, wholesale purchaser-consumer, oxygenate blender, or detergent blender, is found in violation of any of the prohibitions specified in § 80.155(a), the following persons shall be deemed in violation:

(i) Each gasoline refiner, importer, carrier, distributor, reseller, retailer, wholesale purchaser-consumer, oxygenate blender, or detergent blender, who owns, leases, operates, controls or supervises the facility (including, but not limited to, a truck or individual storage tank) where the violation is found;

(ii) Each gasoline refiner, importer, distributor, reseller, retailer, wholesale purchaser-consumer, oxygenate blender, detergent manufacturer, distributor, or blender, who refined, imported, manufactured, sold, offered for sale, dispensed, supplied, offered for supply, stored, detergent additized, transported, or caused the transportation of the detergent-additized gasoline (or the base gasoline component, the detergent component, or the detergent-additized post-refinery component of the gasoline) that is in violation, and each such party that caused the gasoline that is in violation to be present in the gasoline distribution system; and

(iii) Each gasoline carrier who dispensed, supplied, stored, or transported any gasoline in the storage tank containing gasoline found to be in violation, and each detergent carrier who dispensed, supplied, stored, or transported the detergent component of any post-refinery component or gasoline in the storage tank containing gasoline found to be in violation, provided that the EPA demonstrates, by reasonably specific showings by direct or circumstantial evidence, that the gasoline

or detergent carrier caused the violation.

(2) *Post-refinery component non-conformity*. Where detergent-additized PRC contained in any storage tank at any facility owned, leased, operated, controlled or supervised by any gasoline refiner, importer, carrier, distributor, reseller, retailer, wholesale purchaser-consumer, oxygenate blender, detergent manufacturer, carrier, distributor, or blender, is found in violation of the prohibitions specified in § 80.155(e), the following persons shall be deemed in violation:

(i) Each gasoline refiner, importer, carrier, distributor, reseller, retailer, wholesale-purchaser consumer, oxygenate blender, detergent manufacturer, carrier, distributor, or blender, who owns, leases, operates, controls or supervises the facility (including, but not limited to, a truck or individual storage tank) where the violation is found;

(ii) Each gasoline refiner, importer, distributor, reseller, retailer, wholesale-purchaser consumer, oxygenate blender, detergent manufacturer, distributor, or blender, who sold, offered for sale, dispensed, supplied, offered for supply, stored, detergent additized, transported, or caused the transportation of the detergent-additized PRC (or the detergent component of the PRC) that is in violation, and each such party that caused the PRC that is in violation to be present in the PRC or gasoline distribution systems; and

(iii) Each carrier who dispensed, supplied, stored, or transported any detergent-additized post-refinery component in the storage tank containing post-refinery component in violation, and each detergent carrier who dispensed, supplied, stored, or transported the detergent component of any detergent-additized post-refinery component which is in the storage tank containing detergent-additized post-refinery component found to be in violation, provided that the EPA demonstrates by reasonably specific showings by direct or circumstantial evidence, that the gasoline or detergent carrier caused the violation.

(3) *Detergent non-conformity*. Where the detergent (prior to additization) contained in any storage tank or container found at any facility owned, leased, operated, controlled or supervised by any gasoline refiner, importer, carrier, distributor, reseller, retailer, wholesale purchaser-consumer, oxygenate blender, detergent manufacturer, carrier, distributor, or blender, is found in violation of the prohibitions specified in § 80.155(d), the following persons shall be deemed in violation:

(i) Each gasoline refiner, importer, carrier, distributor, reseller, retailer, wholesale-purchaser consumer, oxygenate blender, detergent manufacturer, carrier, distributor, or blender, who owns, leases, operates, controls or supervises the facility (including, but not limited to, a truck or individual storage tank) where the violation is found;

(ii) Each gasoline refiner, importer, distributor, reseller, retailer, wholesale purchaser-consumer, oxygenate blender, detergent manufacturer, distributor, or blender, who sold, offered for sale, dispensed, supplied, offered for supply, stored, transported, or caused the transportation of the detergent that is in violation, and each such party that caused the detergent that is in violation to be present in the detergent, gasoline, or PRC distribution systems; and

(iii) Each gasoline or detergent carrier who dispensed, supplied, stored, or transported any detergent which is in the storage tank or container containing detergent found to be in violation, providing that EPA demonstrates, by reasonably specific showings by direct or circumstantial evidence, that the gasoline or detergent carrier caused the violation.

(4) *Volumetric additive reconciliation*. Where a violation of the volumetric additive reconciliation requirements established by § 80.155(b) has occurred, the following persons shall be deemed in violation:

(i) Each detergent blender who owns, leases, operates, controls or supervises the facility (including, but not limited to, a truck or individual storage tank) where the violation has occurred; and

(ii) Each gasoline refiner, importer, carrier, distributor, reseller, retailer, wholesale purchaser-consumer, or oxygenate blender, and each detergent manufacturer, carrier, distributor, or

blender, who refined, imported, manufactured, sold, offered for sale, dispensed, supplied, offered for supply, stored, transported, or caused the transportation of the detergent-additized gasoline, the base gasoline component, the detergent component, or the detergent-additized post-refinery component, of the gasoline that is in violation, provided that the EPA demonstrates, by reasonably specific showings by direct or circumstantial evidence, that such person caused the violation.

(5) *Product transfer document*. Where a violation of § 80.155(c) is found at a facility owned, leased, operated, controlled, or supervised by any gasoline refiner, importer, carrier, distributor, reseller, retailer, wholesale purchaser-consumer, oxygenate blender, detergent manufacturer, carrier, distributor, or blender, the following persons shall be deemed in violation: each gasoline refiner, importer, carrier, distributor, reseller, retailer, wholesale-purchaser consumer, oxygenate blender, detergent manufacturer, carrier, distributor, or blender, who owns, leases, operates, control or supervises the facility (including, but not limited to, a truck or individual storage tank) where the violation is found.

(b) *Branded refiner vicarious liability*. Where any violation of the prohibitions specified in § 80.155 has occurred, with the exception of violations of § 80.155(c), a refiner will also be deemed liable for violations occurring at a facility operating under such refiner's corporate, trade, or brand name or that of any of its marketing subsidiaries. For purposes of this section, the word facility includes, but is not limited to, a truck or individual storage tank.

(c) *Defenses*. (1) In any case in which a gasoline refiner, importer, distributor, carrier, reseller, retailer, wholesale-purchaser consumer, oxygenate blender, detergent distributor, carrier, or blender, is in violation of any of the prohibitions of § 80.155, pursuant to paragraphs (a) or (b) of this section as applicable, the regulated party shall be deemed not in violation if it can demonstrate:

(i) That the violation was not caused by the regulated party or its employee or agent (unless otherwise provided in this paragraph (c));

(ii) That product transfer documents account for the gasoline, detergent, or detergent-additized post-refinery component in violation and indicate that the gasoline, detergent, or detergent-additized post-refinery component satisfied relevant requirements when it left their control; and

(iii) That the party has fulfilled the requirements of paragraphs (c) (2) or (3) of this section, as applicable.

(2) *Branded refiner*. (i) Where a branded refiner, pursuant to paragraph (b) of this section, is in violation of any of the prohibitions of § 80.155 as a result of violations occurring at a facility (including, but not limited to, a truck or individual storage tank) which is operating under the corporate, trade or brand name of a refiner or that of any of its marketing subsidiaries, the refiner shall be deemed not in violation if it can demonstrate, in addition to the defense requirements stated in paragraph (c)(1) of this section, that the violation was caused by:

(A) An act in violation of law (other than these regulations), or an act of sabotage or vandalism, whether or not such acts are violations of law in the jurisdiction where the violation of the prohibitions of § 80.155 occurred; or

(B) The action of any gasoline refiner, importer, reseller, distributor, oxygenate blender, detergent manufacturer, distributor, blender, or retailer or wholesale purchaser-consumer supplied by any of these persons, in violation of a contractual undertaking imposed by the refiner designed to prevent such action, and despite the implementation of an oversight program, including, but not limited to, periodic review of product transfer documents by the refiner to ensure compliance with such contractual obligation; or

(C) The action of any gasoline or detergent carrier, or other gasoline or detergent distributor not subject to a contract with the refiner but engaged by the refiner for transportation of gasoline, post-refinery component, or detergent, to a gasoline or detergent distributor, oxygenate blender, detergent blender, gasoline retailer or wholesale purchaser consumer, despite

specification or inspection of procedures or equipment by the refiner which are reasonably calculated to prevent such action.

(ii) In this paragraph (c)(2), to show that the violation ''was caused'' by any of the specified actions, the party must demonstrate by reasonably specific showings, by direct or circumstantial evidence, that the violation was caused or must have been caused by another.

(3) *Detergent blender*. In any case in which a detergent blender is liable for violating any of the prohibitions of § 80.155, the detergent blender shall not be deemed in violation if it can demonstrate, in addition to the defense requirements stated in paragraph (c)(1) of this section, the following:

(i) That it obtained or supplied, as appropriate, prior to the detergent blending, accurate written instructions from the detergent manufacturer or other party with knowledge of such instructions, specifying the detergent's minimum recommended concentration (lowest additive concentration) pursuant to § 80.141(c)(3) and, if applicable, the limitations of this concentration for use in leaded product.

(ii) That it has implemented a quality assurance program that includes, but is not limited to, a periodic review of its supporting product transfer and volume measurement documents to confirm the correctness of its product transfer and volumetric additive reconciliation documents created for all products it additized.

(4) *Detergent manufacturer*—(i) *Presumptive liability affirmative defense*. Notwithstanding the provisions of paragraph (c)(1) of this section, in any case in which a detergent manufacturer is liable for violating any of the prohibitions of § 80.155, the detergent manufacturer shall be deemed not in violation if it can demonstrate each of the following:

(A) Product transfer documents which account for the detergent component of the product in violation and which indicate that such detergent satisfied all relevant requirements when it left the detergent manufacturer's control; and

(B) Written blending instructions which, pursuant to § 80.141(c)(3)(ii), were supplied by the detergent manufacturer to its customer who purchased or obtained from the manufacturer the detergent component of the product determined to be in violation. The written blending instructions must have been supplied by the manufacturer prior to the customer's use or sale of the detergent. The instructions must accurately identify the minimum recommended concentration (lowest additive concentration) specified in the detergent's 40 CFR part 79 registration, and must also accurately identify if the detergent, at that concentration, is only registered as effective for use in leaded gasoline.

(C) If the detergent batch used in the noncomplying product was produced less than one year before the manufacturer was notified by EPA of the possible violation, then the manufacturer must provide FTIR or other test results for the batch of detergent used in the noncomplying product, performed in accordance with the detergent testing procedure submitted by the manufacturer, or available for submission, pursuant to § 80.141(f).

(*1*) The analysis may have been conducted on the subject detergent batch at the time it was manufactured, or may be conducted on a sample of that batch which the manufacturer retained for such purpose at the time the batch was manufactured.

(*2*) The test results must accurately establish that, when it left the manufacturer's control, the detergent component of the product determined to be in violation was in conformity with the chemical composition and concentration specifications reported pursuant to § 80.141(c)(1);

(D) If the detergent batch used in the noncomplying product was produced more than one year prior to the manufacturer's notification by EPA of the possible violation, then the manufacturer must provide either:

(*1*) Test results for the batch in question as specified in the paragraph (c)(4)(i)(C) of this section; or

(*2*) The following materials:

(*i*) Documentation of the measured viscosity, density, and basic nitrogen content of the detergent batch in question, or any other such physical parameters which the manufacturer normally

uses to ensure production quality control, which establishes conformity with the manufacturer's quality control standards for such parameters; and

(*ii*) If the detergent registration identifies polymeric component(s) of the detergent package as the product(s) of other chemical reactants, documentation that the reagents used to synthesize the detergent batch in question were the same as those specified in the registration and that they met the manufacturer's normal acceptance criteria for such reagents, reported pursuant to § 80.162(b)(1).

(ii) *Detergent manufacturer causation liability*. In any case in which a detergent manufacturer is liable for a violation of § 80.155, and the manufacturer establishes an affirmative defense to such liability pursuant to paragraph (c)(4)(i) of this section, the detergent manufacturer will nonetheless be deemed liable for the violation of § 80.155 if EPA can demonstrate, by reasonably specific showings by direct or circumstantial evidence, that the detergent manufacturer caused the violation.

(5) *Defense against liability where more than one party may be liable for VAR violations*. In any case in which a party is presumptively or vicariously liable for a violation of § 80.155 due to a failure to meet the VAR requirements § 80.157, except for the VAR record requirements pursuant to § 80.157(g), such party shall not be deemed liable if it can establish the following:

(i) Prior to the violation it had entered into a written contract with another potentially liable detergent blender party (''the assuming party''), under which that other party assumed legal responsibility for fulfilling the VAR requirement that had been violated;

(ii) The contract included reasonable oversight provisions to ensure that the assuming party fulfilled its VAR responsibilities (including, but not limited to, periodic review of VAR records) and the oversight provision was actually implemented by the party raising the defense;

(iii) The assuming party is fiscally sound and able to pay its penalty for the VAR violation; and

(iv) The employees or agents of the party raising the defense did not cause the violation.

(6) *Defense to liability for gasoline nonconformity violations caused solely by the addition of misadditized ethanol or other PRC to the gasoline*. In any case in which a party is presumptively or vicariously liable for a gasoline non-conformity violation of § 80.155(a) caused solely by another party's addition of misadditized ethanol or other PRC to the gasoline, the former party shall not be deemed liable for the violation provided that it can establish that is has fulfilled the requirements of paragraphs (c)(1)(i) and (ii) of this section.

(7) *Detergent tank transitioning defenses*. The commingling of two detergents in the same detergent storage tank will not be deemed to violate or cause violations of any of the provisions of this subpart, provided the following conditions are met:

(i) The commingling must occur during a legitimate detergent transitioning event, *i.e.*, a shift from the use of one detergent to another through the delivery of the new detergent into the same tank that contains the original detergent; and

(ii) If the new detergent is restricted to use in leaded gasoline, then such restriction must be applied to the combined detergents; and

(iii) The commingling event must be documented, either on the VAR formula record or on attached supporting records; and

(iv) Notwithstanding any contrary provisions in § 80.157, a VAR formula record must be created for the combined detergents. The VAR compliance period must begin no later than the time of the commingling event. However, at the blender's option, the compliance period may begin earlier, thus including use of the uncombined original detergent within the same period, provided that the 31-day limitation pursuant to § 80.157(a)(6) is not exceeded; and

(v) The VAR formula record must also satisfy the requirements in one of the following paragraphs (c)(7)(v)(A) through (C) of this section, whichever applies to the commingling event. If neither paragraph (c)(7)(v)(A) nor (B) of this section initially applies, then the

blender may drain and subsequently redeliver the original detergent into the tank in restricted amounts, in order to meet the conditions of paragraph (c)(7)(v)(A) or (B) of this section. Otherwise, the blender must comply with paragraph (c)(7)(v)(C) of this section.

(A) If both detergents have the same LAC, and the original detergent accounts for no more than 20 percent of the tank's total delivered volume after addition of the new detergent, then the VAR formula record is required to identify only the use of the new detergent.

(B) If the two detergents have different LACs and the original detergent accounts for 10 percent or less of the tank's total delivered volume after addition of the new detergent, then the VAR formula record is required to identify only the use of the new detergent, and must attain the LAC of the new detergent. If the original detergent's LAC is greater than that of the new detergent, then the compliance period may begin earlier than the date of the commingling event (pursuant to paragraph (c)(7)(iv) of this section) only if the original detergent does not exceed 10 percent of the total detergent used during the compliance period.

(C) If neither of the preceding paragraphs (c)(7)(v)(A) or (B) of this section applies, then the VAR formula record must identify both of the commingled detergents, and must use and attain the higher LAC of the two detergents. Once the commingled detergent has been depleted by an amount equal to the volume of the original detergent in the tank at the time the new detergent was added, subsequent VAR formula records must identify and use the LAC of only the new detergent.

(8) *Defense to liability for noncompliance with leaded-only use restrictions.* A party shall not be deemed liable for violations of § 80.155(a) or (e) caused solely by the additization or use of gasoline or PRC in violation of leaded-only use restrictions, provided that the conditions specified in § 80.169(c)(9) are met.

(d) *Detergent manufacturer causation liability.* In any case in which a detergent manufacturer is liable for a violation of § 80.155 pursuant to paragraph (a) of this section, and the manufacturer establishes affirmative defense to such liability pursuant to paragraph (c) of this section, the detergent manufacturer will be liable for the violation of § 80.155 pursuant to this paragraph (d) of this section, provided that EPA can demonstrate, by reasonably specific showings by direct or circumstantial evidence, that the detergent manufacturer caused the violation.

[59 FR 54706, Nov. 1, 1994, as amended at 61 FR 35358, July 5, 1996]

§ 80.157 Volumetric additive reconciliation ("VAR"), equipment calibration, and recordkeeping requirements.

This section contains requirements for automated detergent blending facilities and hand-blending detergent facilities. All gasolines and all PRC intended for use in gasoline must be additized, unless otherwise noted in supporting VAR records, and must be accounted for in VAR records. The VAR reconciliation standard is attained under this section when the actual concentration of detergent used per VAR formula record equals or exceeds the lowest additive concentration (LAC) specified for that detergent pursuant to § 80.141(c)(3), or, if appropriate, under § 80.141(d). A separate VAR formula record must be created for leaded gasoline additized with a detergent registered for use only with leaded gasoline, or used at a concentration that is registered as effective for leaded gasoline only. Detergent so used must be accurately and separately measured, either through the use of a separate storage tank, a separate meter, or some other measurement system that is able to accurately distinguish its use. Recorded volumes of gasoline, detergent, and PRC must be expressed to the nearest gallon (or smaller units), except that detergent volumes of five gallons or less must be expressed to the nearest tenth of a gallon (or smaller units). However, if the blender's equipment cannot accurately measure to the nearest tenth of a gallon, then such volumes must be rounded downward to the next lower gallon. PRC included in the reconciliation must be identified. Each VAR formula record must also contain the following information:

(a) *Automated blending facilities.* In the case of an automated detergent blending facility, for each VAR period, for each detergent storage system and each detergent in that storage system, the following must be recorded:

(1) The manufacturer and commercial identifying name of the detergent additive package being reconciled, and the LAC specified in the detergent registration for use with the applicable type of gasoline (i.e., unleaded or leaded). The LAC must be expressed in terms of gallons of detergent per thousand gallons of gasoline or PRC, and expressed to four digits. If the specified LAC is only effective for use with leaded gasoline, the record must so indicate. If the detergent storage system which is the subject of the VAR formula record is a proprietary system under the control of a customer, this fact must be indicated on the record.

(2) The total volume of detergent blended into gasoline and PRC, in accordance with one of the following paragraphs, as applicable.

(i) For a facility which uses in-line meters to measure detergent usage, the total volume of detergent measured, together with supporting data which includes one of the following: the beginning and ending meter readings for each meter being measured, the metered batch volume measurements for each meter being measured, or other comparable metered measurements. The supporting data may be supplied on the VAR formula record or in the form of computer printouts or other comparable VAR supporting documentation.

(ii) For a facility which uses a gauge to measure the inventory of the detergent storage tank, the total volume of detergent shall be calculated from the following equation:

$$\text{Detergent Volume} = (A) - (B) + (C) - (D)$$

where:

A = Initial detergent inventory of the tank

B = Final detergent inventory of the tank

C = Sum of any additions to detergent inventory

D = Sum of any withdrawals from detergent inventory for purposes other than the additization of gasoline or PRC.

The value of each variable in this equation must be separately recorded on the VAR formula record. In addition, a list of each detergent addition included in variable C and a list of each detergent withdrawal included in variable D must be provided, either on the formula record or as VAR supporting documentation.

(3) The total volume of gasoline plus PRC to which detergent has been added, together with supporting data which includes one of the following: The beginning and ending meter measurements for each meter being measured, the metered batch volume measurements for each meter being measured, or other comparable metered measurements. The supporting data may be supplied on the VAR formula record or in the form of computer printouts or other comparable VAR supporting documentation. If gasoline has intentionally been overadditized in anticipation of the later addition of unadditized PRC, then the total volume of gasoline plus PRC recorded must include the expected amount of unadditized PRC to be added later. In addition, the amount of gasoline which was overadditized for this purpose must be specified.

(4) The actual detergent concentration, calculated as the total volume of detergent added (pursuant to paragraph (a)(2) of this section), divided by the total volume of gasoline plus PRC (pursuant to paragraph (a)(3) of this section). The concentration must be calculated and recorded to four digits.

(5) A list of each detergent concentration rate initially set for the detergent that is the subject of the VAR record, together with the date and description of each adjustment to any initially set concentration. The concentration adjustment information may be supplied on the VAR formula record or in the form of computer printouts or other comparable VAR supporting documentation. No concentration setting is permitted below the applicable LAC, except as may be modified pursuant to § 80.141(d) or as described in paragraph (a)(7) of this section.

(6) The dates of the VAR period, which shall be no longer than thirty-

one days. If the VAR period is contemporaneous with a calendar month, then specifying the month will fulfill this requirement; if not, then the beginning and ending dates and times of the VAR period must be listed. The times may be supplied on the VAR formula record or in supporting documentation. Any adjustment to any detergent concentration rate more than 10 percent over the concentration rate initially set in the VAR period shall terminate that VAR period and initiate a new VAR period, except as provided in paragraph (a)(7) of this section.

(7) The concentration setting for a detergent injector may be set below the applicable LAC, or it may be adjusted more than 10 percent above the concentration initially set in the VAR period without terminating that VAR period, provided that:

(i) The purpose of the change is to correct a batch misadditization prior to the end of the VAR period and prior to the transfer of the batch to another party, or to correct an equipment malfunction; and

(ii) The concentration is immediately returned after the correction to a concentration that fulfills the requirements of paragraphs (a)(5) and (6) of this section; and

(iii) The blender creates and maintains documentation establishing the date and adjustments of the correction; and

(iv) If the correction is initiated only to rectify an equipment malfunction, and the amount of detergent used in this procedure is not added to gasoline in the compliance period, then this amount is subtracted from the detergent volume listed on the VAR formula record.

(8) If unadditized gasoline has been transferred from the facility, other than bulk transfers from refineries or pipelines to non-retail outlets or non-WPC facilities, the total amount of such gasoline must be specified.

(b) *Non-automated facilities.* In the case of a facility in which hand blending or any other non-automated method is used to blend detergent, for each detergent and for each batch of gasoline and each batch of PRC to which the detergent is being added, the following shall be recorded:

(1) The manufacturer and commercial identifying name of the detergent additive package being reconciled, and the LAC specified in the detergent registration for use with the applicable type of gasoline (i.e., unleaded or leaded). The LAC must be expressed in terms of gallons of detergent per thousand gallons of gasoline or PRC, and expressed to four digits. If the specified LAC is only effective for use with leaded gasoline, the record must so indicate.

(2) The date of the additization that is the subject of the VAR formula record.

(3) The volume of added detergent.

(4) The volume of the gasoline and/or PRC to which the detergent has been added. If gasoline has intentionally been overadditized in anticipation of the later addition of unadditized PRC, then the total volume of gasoline plus PRC recorded must include the expected amount of unadditized PRC to be added later. In addition, the amount of gasoline which was overadditized for this purpose must be specified.

(5) The brand (if known), grade, and leaded/unleaded status of gasoline, and/or the type of PRC.

(6) The actual detergent concentration, calculated as the volume of added detergent (pursuant to paragraph (b)(3) of this section), divided by the volume of gasoline and/or PRC (pursuant to paragraph (b)(4) of this section). The concentration must be calculated and recorded to four digits.

(c) Every VAR formula record created pursuant to paragraphs (a) and (b) of this section shall contain the following:

(1) The signature of the creator of the VAR record;

(2) The date of the creation of the VAR record; and

(3) A certification of correctness by the creator of the VAR record.

(d) *Electronically-generated VAR formula and supporting records.* (1) Electronically-generated records are acceptable for VAR formula records and supporting documentation (including PTDs), provided that they are complete, accessible, and easily readable. VAR formula records must also be stored with access and audit security,

which must restrict to a limited number of specified people those who have the ability to alter or delete the records. In addition, parties maintaining records electronically must make available for EPA use the hardware and software necessary to review the records.

(2) Electronically-generated VAR formula records may use an electronic user identification code to satisfy the signature requirements of paragraph (c)(1) of this section, provided that:

(i) The use of the ID is limited to the record creator; and

(ii) A paper record is maintained, which is signed and dated by the VAR formula record creator, acknowledging that the use of that particular user ID on a VAR formula record is equivalent to his/her signature on the document.

(e) Automated detergent blenders must calibrate their detergent equipment once in each calendar half year, with the acceptable calibrations being no less than one hundred twenty days apart. Equipment recalibration is also required each time the detergent package is changed, unless written documentation indicates that the new detergent package has the same viscosity as the previous detergent package. Detergent package change calibrations may be used to satisfy the semiannual requirement provided that the calibrations occur in the appropriate half calendar year and are no less than one hundred twenty days apart.

(f) The following VAR supporting documentation must also be created and maintained:

(1) For all automated detergent blending facilities, documentation reflecting performance of the calibrations required by paragraph (e) of this section, and any associated adjustments of the automated detergent equipment;

(2) For all hand-blending facilities which are terminals, a record specifying, for each calendar month, the total volume in gallons of transfers from the facility of unadditized base gasoline;

(3) For all detergent blending facilities, product transfer documents for all gasoline, detergent and detergent-additized PRC transferred into or out of the facility; in addition, bills of lading, transfer, or sale for all unadditized PRC transferred into the facility;

(4) For all automated detergent blending facilities, documentation establishing the brands (if known) and grades of the gasoline which is the subject of the VAR formula record;

(5) For all hand blending detergent blenders, the documentation, if in the party's possession, supporting the volumes of gasoline, PRC, and detergent reported on the VAR formula record; and

(6) For all detergent blending facilities, documentation establishing the curing of a batch or amount of misadditized gasoline or PRC, or the curing of a use restriction on the additized gasoline or PRC, and providing at least the following information: the date of the curing procedure; the problem that was corrected; the amount, name, and LAC of the original detergent used; the amount, name, and LAC of the added curing detergent; and the actual detergent concentration attained in, and the volume of, the total cured product.

(g) *Document retention and availability.* All detergent blenders shall retain the documents required under this section for a period of five years from the date the VAR formula records and supporting documentation were created, and shall deliver them upon request to the EPA Administrator or the Administrator's authorized representative.

(1) Except as provided in paragraph (g)(3) of this section, automated detergent blender facilities and hand-blender facilities which are terminals, which physically blend detergent into gasoline, must make immediately available to EPA, upon request, the preceding twelve months of VAR formula records plus the preceding two months of VAR supporting documentation.

(2) Except as provided in paragraph (g)(3) of this section, other hand-blending detergent facilities which physically blend detergent into gasoline must make immediately available to EPA, upon request, the preceding two months of VAR formula records and VAR supporting documentation.

(3) Facilities which have centrally maintained records at other locations, or have customers who maintain their

own records at other locations for their proprietary detergent systems, and which can document this fact to the Agency, may have until the start of the next business day after the request to supply VAR supporting documentation, or longer if approved by the Agency.

(4) In this paragraph (g) of this section, the term immediately available means that the records must be provided, electronically or otherwise, within approximately one hour of EPA's request, or within a longer time frame as approved by EPA.

[59 FR 54706, Nov. 1, 1994, as amended at 61 FR 35360, July 5, 1996]

§ 80.158 Product transfer documents (PTDs).

(a) *Contents.* For each occasion when any gasoline refiner, importer, reseller, distributor, carrier, retailer, wholesale purchaser-consumer, oxygenate blender, detergent manufacturer, distributor, carrier, or blender, transfers custody or title to any gasoline, detergent, or detergent-additized PRC other than when detergent-additized gasoline is sold or dispensed at a retail outlet or wholesale purchaser-consumer facility to the ultimate consumer, the transferor shall provide to the transferee, and the transferee shall acquire from the transferor, documents which accurately include the following information:

(1) The names and addresses of the transferee and transferor; the address requirement may be fulfilled, in the alternative, through separate documentation which establishes said addresses and is maintained by the parties and made available to EPA for the same length of time as required for the PTDs, provided that the normal business procedure of these parties is not to identify addresses on PTDs.

(2) The date of the transfer.

(3) The volume of product transferred.

(4)(i) The identity of the product being transferred (i.e., its identity as base gasoline, detergent, detergent-additized gasoline, or specified detergent-additized oxygenate or detergent-additized gasoline blending stock that comprises a detergent-additized PRC). PTDs for detergent-additized gasoline or PRC are not required to identify the particular detergent used to additize the product.

(ii) If the product being transferred consists of two or more different types of product subject to this regulation, i.e., base gasoline, detergent-additized gasoline, or specified detergent-additized PRC, then the PTD for the commingled product must identify each such type of component contained in the commingled product.

(5) If the product being transferred is base gasoline, then in addition to the base gasoline identification, the following warning must be stated on the PTD: ''Not for sale to the ultimate consumer''. If, pursuant to § 80.160(a), the product being transferred is exempt base gasoline to be used for research, development, or test purposes only, the following warning must also be stated on the PTD: ''For use in research, development, and test programs only.''

(6) The name of the detergent additive as reported in its registration must be used to identify the detergent package on its PTD.

(7) If the product being transferred is leaded gasoline, then the PTD must disclose that the product contains lead and/or phosphorous, as applicable.

(8) If the product being transferred is detergent that is only authorized for the control of carburetor deposits, then the following must be stated on the detergent's transfer document: ''For use with leaded gasoline only.''

(9) If the product being transferred is detergent-additized gasoline that has been overadditized in anticipation of the later (or earlier) addition of PRC, then the PTD must include a statement that the product has been overadditized to account for a specified volume in gallons, or a specified percentage of the product's total volume, of additional, specified PRC.

(b) Gasoline may not be additized with a detergent authorized only for the control of carburetor deposits and whose product transfer document states ''For use with leaded gasoline only'', and gasoline may not be additized at the lower concentration specified for a detergent authorized at a lower concentration for the control of carburetor deposits only, unless the

product transfer document for the gasoline to be additized identifies it as leaded gasoline.

(c) *Use of product codes and other non-regulatory language.* (1) Product codes and other non-regulatory language may not be used as a substitute for the specified PTD warning language specified in paragraph (a)(6) of this section for base gasoline, except that:

(i) The specified warning language may be omitted for bulk transfers of base gasoline from a refinery to a pipeline if there is a prior written agreement between the parties specifying that all such gasoline is unadditized and will not be transferred to the ultimate consumer;

(ii) Product codes may be used as a substitute for the specified warning language provided that the PTD is an electronic data interchange (EDI) document being used solely for the transfer of title to the base gasoline, and provided that the product codes otherwise comply with the requirements of this section.

(2) Product codes and other language not specified in this section may otherwise be used to comply with PTD information requirements, provided that they are clear, accurate, and not misleading.

(3) If product codes are used, they must be standardized throughout the distribution system in which they are used, and downstream parties must be informed of their full meaning.

(d) *PTD exemption for small transfers of additized gasoline.* Transfers of additized gasoline are exempt from the PTD requirements of this section provided all the following conditions are followed:

(1) The product is being transferred by a distributor who is not the product's detergent blender; and

(2) The recipient is a wholesale purchaser-consumer (WPC) or other ultimate consumer of gasoline, for its own use only or for that of its agents or employees; and

(3) The volume of additized gasoline being transferred is not greater than 550 gallons.

(e) *Recordkeeping period.* Any person creating, providing or acquiring product transfer documentation for gasoline, detergent, or detergent-additized PRC, except as provided in paragraph (d) of this section, shall retain the documents required by this section for a period of five years from the date the product transfer documentation was created, received or transferred, as applicable, and shall deliver such documents to EPA upon request. WPCs are not required to retain PTDs of additized gasoline received by them.

[61 FR 35362, July 5, 1996, as amended at 62 FR 60001, Nov. 6, 1997]

§ 80.159 Penalties.

(a) *General.* Any person who violates any prohibition or affirmative requirement of § 80.155 shall be liable to the United States for a civil penalty of not more than the sum of $25,000 for every day of such violation and the amount of economic benefit or savings resulting from the violation.

(b) *Gasoline non-conformity.* Any violation of § 80.155(a) shall constitute a separate day of violation for each and every day the gasoline in violation remains at any place in the gasoline distribution system, beginning on the day that the gasoline is in violation of the respective prohibition and ending on the last day that such gasoline is offered for sale or is dispensed to any ultimate consumer.

(c) *Detergent non-conformity.* Any violation of § 80.155(d) shall constitute a separate day of violation for each and every day the detergent in violation remains at any place in the gasoline or detergent distribution system, beginning on the day that the detergent is in violation of the prohibition and ending on the last day that detergent-additized gasoline, containing the subject detergent as a component thereof, is offered for sale or is dispensed to any ultimate consumer.

(d) *Post-refinery component non-conformity.* Any violation of § 80.155(e) shall constitute a separate day of violation for each and every day the post-refinery component in violation remains at any place in the post-refinery component or gasoline distribution system, beginning on the day that the post-refinery component is in violation of the respective prohibition and ending on the last day that detergent-additized gasoline containing the post-refinery

component is offered for sale or is dispensed to any ultimate consumer.

(e) *Product transfer document non-conformity*. Any violation of § 80.155(c) shall constitute a separate day of violation for every day the product transfer document is not fully in compliance. This is to begin on the day that the product transfer document is created or should have been created and to end at the later of the following dates: Either the day that the document is corrected and comes into compliance, or the day that gasoline not additized in conformity with interim detergent program requirements, as a result of the product transfer document non-conformity, is offered for sale or is dispensed to the ultimate consumer.

(f) *Volumetric additive reconciliation (VAR) record keeping non-conformity*. Any VAR recordkeeping violation of § 80.155(b) shall constitute a separate day of violation for every day that VAR recordkeeping is not fully in compliance. Each element of the VAR record keeping program that is not in compliance shall constitute a separate violation for purposes of this section.

(g) *Volumetric additive reconciliation (VAR) compliance standard non-conformity*. Any violation of the VAR compliance standard established in § 80.157 shall constitute a separate day of violation for each and every day of the VAR compliance period in which the standard was violated.

(h) *Volumetric additive reconciliation (VAR) equipment calibration non-conformity*. Any VAR equipment calibration violation of § 80.155(b) shall constitute a separate day of violation for every day a VAR equipment calibration requirement is not met.

§ 80.160 Exemptions.

(a) *Research, development, and testing exemptions*. Any detergent that is either in a research, development, or test status, or is sold to petroleum, automobile, engine, or component manufacturers for research, development, or test purposes, or any gasoline to be used by, or under the control of, petroleum, additive, automobile, engine, or component manufacturers for research, development, or test purposes, is exempted from the provisions of the interim detergent program, provided that:

(1) The detergent (or fuel containing the detergent), or the gasoline, is kept segregated from non-exempt product, and the party possessing the product maintains documentation identifying the product as research, development, or testing detergent or fuel, as applicable, and stating that it is to be used only for research, development, or testing purposes; and

(2) The detergent (or fuel containing the detergent), or the gasoline, is not sold, dispensed, or transferred, or offered for sale, dispensing, or transfer from a retail outlet. It shall also not be sold, dispensed, or transferred, or offered for sale, dispensing, or transfer from a wholesale purchaser-consumer facility, unless such facility is associated with detergent, fuel, automotive, or engine research, development or testing; and

(3) The party using the product for research, development, or testing purposes, or the party sponsoring this usage, notifies the EPA, on at least an annual basis and prior to the use of the product, of the purpose(s) of the program(s) in which the product will be used and the anticipated volume of the product to be used. The information must be submitted to the address or fax number provided in § 80.174(c).

(b) *Racing fuel and aviation fuel exemptions*. Any fuel that is refined, sold, dispensed, transferred, or offered for sale, dispensing, or transfer as automotive racing fuel or as aircraft engine fuel, is exempted from the provisions of this subpart, provided that:

(1) The fuel is kept segregated from non-exempt fuel, and the party possessing the fuel for the purposes of refining, selling, dispensing, transferring, or offering for sale, dispensing, or transfer as automotive racing fuel or as aircraft engine fuel, maintains documentation identifying the product as racing fuel, restricted for non-highway use in racing motor vehicles, or as aviation fuel, restricted for use in aircraft, as applicable;

(2) Each pump stand at a regulated party's facility, from which such fuel is

dispensed, is labeled with the applicable fuel identification and use restrictions described in paragraph (b)(1) of this section; and

(3) The fuel is not sold, dispensed, transferred, or offered for sale, dispensing, or transfer for highway use in a motor vehicle.

(c) *California gasoline exemptions.* (1) Gasoline or PRC which is additized in the State of California is exempt from the VAR provisions in §§ 80.155(b) and (e) and 80.157, provided that:

(i) For all such gasoline or PRC, whether intended for sale within or outside of California, records of the type required for California gasoline (specified in title 13, California Code of Regulations, section 2257) are maintained; and

(ii) Such records, with the exception of daily additization records, are maintained for a period of five years from the date they were created and are delivered to EPA upon request.

(2) Gasoline or PRC that is transferred and/or sold solely within the State of California is exempt from the PTD provisions of the interim detergent program, specified in §§ 80.155(c) and 80.158.

(3) Nothing in this paragraph (c) exempts such gasoline or PRC from the requirements of § 80.155(a) and (e), as applicable. EPA will base its determination of California gasoline's conformity with the detergent's LAC on the additization records required by CARB, or records of the same type.

[61 FR 35363, July 5, 1996]

§ 80.161 Detergent additive certification program.

(a) *Effective dates and applicability of requirements.* (1) As of July 1, 1997:

(i) Detergent additives for the control of port fuel injector deposits (PFID) and/or intake valve deposits (IVD) in gasoline engines may not be transferred or sold for use in compliance with this subpart unless such additives have been certified according to the requirements of this section.

(ii) Except as provided in § 80.169(c)(8), PFID and IVD control additives may not be added to gasoline or post-refinery component (PRC) for compliance with this subpart unless such additives have been certified according to the requirements of this section.

(iii) Gasoline may not be sold or transferred to a party who sells or transfers gasoline to the ultimate consumer unless such gasoline contains detergent additives which have been certified according to the requirements of this section.

(2) Beginning August 1, 1997, all gasoline sold or transferred to the ultimate consumer must contain detergent additive(s) which have been certified, according to the requirements of this section, to be effective for the control of PFID and IVD in gasoline engines.

(3) Except as specifically exempted in § 80.173, these detergency requirements apply to all gasoline, whether intended for on-highway or nonroad use, including conventional, oxygenated, reformulated, and leaded gasolines, as well as the gasoline component in mixtures of petroleum and alcohol fuels, gasoline used as marine fuel, gasoline service accumulation fuel (as described in § 86.113–94(a)(1) of this chapter), the gasoline component of fuel mixtures of petroleum and methanol used for service accumulation in flexible fuel vehicles (as described in § 86.113–94(d) of this chapter), the gasoline used for factory fill purposes, and all additized PRC.

(4) The specific controls and prohibitions applicable to persons subject to these regulations are set forth in § 80.168.

(b) *Detergent additive certification requirements.* For a detergent additive package to be certified as eligible for use by detergent blenders in complying with the gasoline detergency requirements of this subpart, the requirements listed in this paragraph (b) must be satisfied for such detergent. Subject to the provisions of paragraph (e) of this section, if the certifier fails to conduct the specified tests or to submit the specified materials, or if EPA judges the testing or materials to be inadequate, or if the detergent fails EPA confirmatory deposit control performance testing pursuant to § 80.167, the Administrator may deny or withdraw the detergent's eligibility to be used to satisfy the detergency requirements of this subpart.

(1) The detergent additive manufacturer must properly register the detergent additive under 40 CFR part 79. For this purpose:

(i) The compositional data required under § 79.21(a) of this chapter shall include the information specified in § 80.162.

(ii) The minimum recommended additive concentration required under § 79.21(d) of this chapter shall be reported to EPA in units of gallons of detergent additive package per 1000 gallons of gasoline or PRC, provided to four digits. This concentration is the lowest additive concentration (LAC) referred to in § 80.170, and shall be reported as follows:

(A) For a detergent additive registered for use in unleaded gasoline, the minimum concentration must be determined and reported for each certification option under which the manufacturer wishes to certify the additive pursuant to § 80.163.

(*1*) In the case of a detergent certified for use in California gasoline based on an existing certification granted by the California Air Resources Board (CARB), pursuant to § 80.163(d), the minimum recommended concentration must equal or exceed the amount specified in the CARB certification.

(*2*) In the case of any other detergent certification option, the minimum recommended concentration must equal or exceed the amount mixed into the associated test fuel specified in § 80.164, which was shown to satisfy the PFID and IVD deposit control performance tests and standards specified in § 80.165.

(B) For a detergent registered for use in leaded gasoline, the minimum recommended concentration must be no less than the amount shown to be needed for control of carburetor deposits, pursuant to the test procedure and test fuel guidelines in § 80.166.

(C) Once it has been registered by EPA, the minimum recommended concentration specified by a detergent manufacturer to detergent blenders and other users of the additive, pursuant to paragraph (c) of this section, may not be changed without first notifying EPA. Such notification should be sent by certified mail to the address specified in § 80.174(b). The change in minimum concentration must be supported by existing certification data or else the notification to EPA must be accompanied by new certification information which demonstrates that the modification is consistent with the requirements of paragraphs (b)(1)(ii)(A) and (B) of this section.

(D) A manufacturer may use a single set of certification test data to demonstrate the deposit control effectiveness of more than one registered detergent additive product, provided that:

(*1*) The additive products contain all of the same detergent-active components and no detergent-active components other than those contained in common; and

(*2*) The minimum concentration recommended for the use of each such additive product is specified such that, when each additive product is mixed in gasoline at the recommended concentration, each of its detergent-active components will be present at a final concentration no less than the lowest concentration of that component which was present when the tested additive product met the PFID and IVD performance standards specified in § 80.165.

(2) The detergent additive manufacturer (or other certifying party) must submit to EPA a sample of the actual detergent additive package which was used in the certification testing specified in § 80.164 or, if such sample is not available, then a sample which has the same composition as the package used in certification testing.

(i) The sample volume shall be between 250 ml and 500 ml.

(ii) The sample shall be packaged in a container which has a resealable closure and which will maintain sample integrity for at least one year. The container shall be labeled with the name and address of the manufacturer and the name of the detergent additive package.

(iii) Any known shelf life limitations, and any available information on optimal temperature, light exposure, or other conditions to prolong sample shelf life, shall be provided.

(iv) If the certifying party wishes to claim that the sample or any accompanying documents are entitled to special handling for reasons of business confidentiality, the party must clearly identify the sample or documents as

such. EPA will handle any samples or documents with such claims according to the regulations at 40 CFR part 2.

(v) The sample shall be submitted to EPA, at the address provided in § 80.174(a), within seven days of the date on which the certification letter for the detergent package is sent to EPA as required by paragraph (b)(3) of this section.

(3) The detergent additive manufacturer (or other certifying party) shall submit a certification letter for the detergent additive package to the address in § 80.174(b). The party must use certified or express mail with return receipt service. The letter shall be signed by a person legally authorized to represent the certifying party and shall contain the following information:

(i) Identifying information.

(A) The name and address of the detergent additive manufacturer.

(B) In any case where the certifier is not the detergent additive manufacturer, such as in the case of a fuel-specific certification pursuant to § 80.163(c), the name and address of the certifier.

(C) The commercial identifying name of the detergent additive product as registered under the requirements of § 79.21 of this chapter.

(ii) A statement attesting that:

(A) The detergent package which is the subject of this certification has been tested according to applicable procedural and test fuel requirements in this subpart and has met the applicable performance standards; and

(B) The testing was conducted in a manner consistent with good engineering practices; and

(C) Complete documentation of the test fuel formulation and IVD demonstration procedures, detergent performance test procedures, and test results are available for EPA's inspection upon request.

(iii) The name and location of the laboratory(ies) at which the certification testing was conducted and the dates during which the testing was conducted.

(iv) For each option under which certification is sought pursuant to § 80.163, specifications of the test fuel(s) in which the detergent underwent performance testing. These fuel specifications must include:

(A) The sulfur content in weight percent.

(B) The T–90 distillation point in degrees Fahrenheit.

(C) The olefin content in volume percent.

(D) The aromatic content in volume percent.

(E) The identity and volume percent of any oxygenate compound.

(F) The source of the test fuel(s) and/or fuel blend stocks used to formulate the test fuel(s).

(v) In the case of a national or PADD certification (pursuant to § 80.163 (a) or (b)) for which the test fuel was specially formulated from refinery blend stocks, the results of the IVD demonstration test, pursuant to § 80.164(b)(3).

(vi) In the case of a fuel-specific detergent certification, pursuant to § 80.163(c), the definition of the segregated gasoline pool, including any permitted PRC, for which the certification is sought, and the fuel parameter percentile distributions determined for the subject gasoline pool, as specified in § 80.164(c). The percentile distributions must include all of the fuel parameters listed in paragraph (b)(3)(iv) (A) through (D) of this section, along with any other fuel parameter(s) which the certifier wishes to use to define the certification fuel. As specified in § 80.164(c)(1)(iv), the procedures used to measure the additional parameters must be identified, as well as the levels of these additional parameters present in the test fuel(s).

(vii) In the case of a certification for California gasoline based on an existing certification granted by CARB, pursuant to § 80.163(d), a copy of the CARB certificate.

(viii) The test concentration(s) of the subject detergent additive in each test fuel, and the corresponding test results (percent flow restriction demonstrated in the PFID test and milligrams of deposit per valve demonstrated in the IVD test).

(ix) For each option under which certification of the detergent is sought, the minimum recommended concentration which the certifying party seeks to establish for the detergent additive

package, pursuant to paragraph (b)(1)(ii) of this section.

(4) EPA will acknowledge receipt of the detergent certification letter. The effective date of certification will be the sooner of 60 days from the date on which EPA receives the certification letter, or the certifier's receipt of EPA's acknowledgement of the certification letter. However, neither the passage of 60 days nor EPA's acknowledgement will signify acceptance by EPA of the validity of the information in the certification letter or the adequacy or potency of the detergent sample submitted pursuant to paragraph (b)(2) of this section. EPA may elect at any time to review the detergent certification data, analyze the submitted detergent additive sample, or subject the detergent additive package to confirmatory testing as described in § 80.167 and, where appropriate, may disqualify a detergent certification according to the provisions in paragraph (e) of this section.

(c) The minimum concentration reported in the detergent registration according to the provisions of paragraph (b)(1)(ii) of this section, plus any restrictions in use associated with that concentration, must be accurately communicated in writing by the additive manufacturer to each fuel manufacturer or detergent blender who purchases the subject detergent for purpose of compliance with the gasoline detergency requirements of this subpart, and to any additive manufacturer who purchases the subject additive with the intent of reselling it to a fuel manufacturer for this purpose.

(d) The rate at which a detergent blender treats gasoline with a detergent additive package must be no less than the minimum recommended concentration reported for the subject detergent additive pursuant to paragraph (b)(1)(ii) of this section, except under the following conditions:

(1) If a detergent blender possesses deposit control performance test results as specified in § 80.165 or § 80.166 which show that the minimum treat rate recommended by the manufacturer of a detergent additive product exceeds the amount of that detergent actually required for effective deposit control, then, upon informing EPA in writing of these circumstances, the detergent blender may use the detergent at the lower concentration substantiated by these test results.

(2) The notification to EPA must clearly specify the name of the detergent product and its manufacturer, the concentration recommended by the detergent manufacturer, and the lower concentration which the detergent blender intends to use. The notification must also attest that the required data are available to substantiate the deposit control effectiveness of the detergent at the intended lower concentration. The notification must be sent by certified mail to the address specified in § 80.174(b).

(3) At its discretion, EPA may require that the detergent blender submit the test data purported to substantiate the claimed effectiveness of the lower concentration of the detergent additive. In addition, EPA may require the manufacturer of the subject detergent additive to submit test data substantiating the minimum recommended concentration specified in the detergent additive registration. In either case, EPA will send a letter to the appropriate party; the supporting data will be due to EPA within 30 days of receipt of EPA's letter.

(i) If the detergent blender fails to submit the required supporting data to EPA in the allotted time period, or if EPA judges the submitted data to be inadequate to support the detergent blender's claim that the lower concentration provides a level of deposit control consistent with the requirements of this section, then EPA will disapprove the use of the detergent at the lower concentration. Further, the detergent blender may be subject to applicable liabilities and penalties pursuant to §§ 80.169 and 80.172 for any gasoline or PRC it has additized at the lower concentration.

(ii) If the detergent manufacturer fails to submit the required test data to EPA within the allotted time period, EPA will proceed on the assumption that data are not available to substantiate the minimum recommended concentration specified in the detergent registration, and the subject additive may be disqualified for use in complying with the requirements of this

subpart, pursuant to the procedures in paragraph (e) of this section. The detergent manufacturer may also be subject to applicable liabilities and penalties in §§ 80.169 and 80.172.

(iii) If both parties submit the required information, EPA will evaluate the quality and results of both sets of test data, and will either approve or disapprove the use of the lower treat rate submitted by the detergent blender. EPA will inform both parties of the results of its analysis.

(e) *Disqualification of a detergent additive package.* (1) When EPA makes a preliminary determination that a detergent additive certifier has failed to comply with the detergent certification requirements of this section, including a failure to submit required materials for a detergent additive or submission of materials which EPA deems inadequate, or if a detergent additive fails confirmatory testing conducted pursuant to § 80.167, EPA shall notify the additive certifier by certified mail, return receipt requested, setting forth the basis for that determination and informing the certifier that the detergent may lose its eligibility to be used to comply with the detergency requirements of this section.

(2) If EPA determines that the detergent certification was created by fraud or other misconduct, such as a negligent disregard for the truthfulness or accuracy of the required information, the detergent certification will be considered void *ab initio* and the disqualification will be retroactive to July 1, 1997 or the date on which the additive product was first certified, whichever is later.

(3) The certifier will be afforded 60 days from the date of receipt of the notice of intent of detergent disqualification to submit written comments concerning the notice, and to demonstrate or achieve compliance with the specific requirements which provide the basis for the proposed disqualification. If the certifier does not respond in writing within 60 days from the date of receipt of the notice of intent of disqualification, the detergent disqualification shall become final and the Administrator shall notify the certifier of such final disqualification order. If the certifier responds in writing within 60 days from the date of receipt of the notice of intent to disqualify, the Administrator shall review and consider all comments submitted by the certifier before taking final action concerning the proposed disqualification. All correspondence regarding a disqualification must be sent to the address provided in § 80.174(b).

(4) As part of a written response to a notice of intent to disqualify, a certifier may request an informal hearing concerning the notice. Any such request shall state with specificity the information the certifier wishes to present at such a hearing. If an informal hearing is requested, EPA shall schedule such a hearing within 90 days from the date of receipt of the request. If an informal hearing is held, the subject matter of the hearing shall be confined solely to whether or not the certifier has complied with the specific requirements which provide the basis for the proposed disqualification. If an informal hearing is held, the designated presiding officer may be any EPA employee, the hearing procedures shall be informal, and the hearing shall not be subject to or governed by 40 CFR part 22 or by 5 U.S.C. 554, 556, or 557. A verbatim transcript of each informal hearing shall be kept and the Administrator (or designee) shall consider all relevant evidence and arguments presented at the hearing in making a final decision concerning a proposed disqualification.

(5) If a certifier who has received a notice of intent to disqualify submits a timely written response, and the Administrator (or designee) decides after reviewing the response and the transcript of any informal hearing to disqualify the detergent for use in complying with the requirements of this subpart, the Administrator (or designee) shall issue a final disqualification order and forward a copy of the disqualification order to the certifier by certified mail. Notice of the disqualification order will also be published in the FEDERAL REGISTER. The disqualification will become effective as of the date on which the copy of the order is received by the certifier. If the certifier is also a blender of the disqualified additive, then the certifier

must stop using the ineligible detergent upon receipt of the disqualification order.

(6) Within 10 days of receipt of EPA's notification of the final decision to disqualify a detergent additive package pursuant to this paragraph (e), the detergent certifier must submit to EPA, at the address specified in § 80.174(b), a list of its customers who use the disqualified detergent. Failure to do so may subject the certifier to liabilities for violations of § 80.168 that result from the use of the uncertified detergent. EPA shall inform the certifier's customers by certified mail that the detergent is no longer eligible for compliance with the requirements of this subpart. These parties must stop using the ineligible detergent additive package and substitute an eligible detergent additive within 45 days of receiving the notification, or within 45 days of publication of the disqualification notice in the FEDERAL REGISTER, whichever occurs sooner.

[61 FR 35364, July 5, 1996, as amended at 61 FR 58747, Nov. 18, 1996]

§ 80.162 Additive compositional data.

For a detergent additive product to be eligible for use by detergent blenders in complying with the gasoline detergency requirements of this subpart, the compositional data to be supplied to EPA by the additive manufacturer for the purpose of registering a detergent additive package under § 79.21(a) of this chapter must include the items listed in this section. In the case of items requiring measurement or other technical analysis, and for which a specific test procedure is not stipulated herein, the procedure must conform to reasonable and customary standards of repeatability and reproducibility, and reasonable and customary limits of detection and accuracy for the type of test procedure or analytic procedure in question. At EPA's request, detailed documentation of any such test procedure must be submitted within 10 days of the registrant's receipt of EPA's request.

(a) A complete listing of the components of the detergent additive package and the weight and/or volume percent (as applicable) of each component of the package.

(1) When possible, standard chemical nomenclature shall be used or the chemical structure of the component shall be given. Polymeric components may be reported as the product of other chemical reactants, provided that the supporting data specified in paragraph (b) of this section is also reported.

(2) Each detergent-active component of the package shall be classified into one of the following designations:

(i) Polyalkyl amine;

(ii) Polyether amine;

(iii) Polyalkylsuccinimide;

(iv) Polyalkylaminophenol;

(v) Detergent-active petroleum-based carrier oil;

(vi) Detergent-active synthetic carrier oil; and

(vii) Other detergent-active component (identify category, if feasible.)

(3) Composition variability.

(i) The composition of a detergent additive reported in a single additive registration (and the detergent additive product sold under a single additive registration) may not:

(A) Include detergent-active components which differ in identity from those contained in the detergent additive package at the time of certification testing; or

(B) Include a range of concentration for any detergent-active component such that, if the component were present in the detergent additive package at the lower bound of the reported range, the deposit control effectiveness of the additive package would be reduced as compared with the level of effectiveness demonstrated during certification testing. Subject to the foregoing constraint, a detergent additive product sold under a particular additive registration may contain a higher concentration of the detergent-active component(s) than the concentration(s) of such component(s) reported in the registration for the additive.

(ii) The identity or concentration of non-detergent-active components of the detergent additive package may vary under a single registration provided that such variability does not reduce the deposit control effectiveness of the additive package as compared with the level of effectiveness demonstrated during certification testing.

(A) Unless the additive manufacturer (or other certifying party) provides EPA with data to substantiate that a carrier oil does not act to enhance the detergent additive package's ability to control deposits, any carrier oil contained in the detergent additive package, whether petroleum-based or synthetic, must be treated as a detergent-active component in accordance with the additive compositional reporting requirements in § 80.162(a)(2). Such data should be sent by certified mail to the address specified in § 80.174(b).

(B) [Reserved]

(iii) Except as provided in paragraph (a)(3)(iv) of this section, detergent additive packages which do not satisfy the restrictions in this paragraph (a)(3) must be separately registered. EPA may disqualify an additive for use in satisfying the requirements of this subpart if EPA determines that the variability included within a given detergent additive registration may reduce the deposit control effectiveness of the detergent package such that it may invalidate the minimum recommended concentration reported in accordance with the applicable requirements of § 80.161(b)(1)(ii).

(iv) A change in minimum concentration requirements resulting from a modification of detergent additive composition shall not require a new detergent additive registration or a change in existing registration if:

(A) The modification is effected by a detergent blender only for its own use or for the use of parties which are subsidiaries of, or share common ownership with, the blender, and the modified detergent is not sold or transferred to other parties; and

(B) The modification is a dilution of the additive for the purpose of ensuring proper detergent flow in cold weather; and

(C) Gasoline is the only diluting agent used; and

(D) The diluted detergent is subsequently added to gasoline at a rate that attains the detergent's registered minimum recommended concentration, taking into account the dilution; and

(E) EPA is notified, either before or within seven days after the dilution action, of the identity of the detergent, the identity of the diluting material, the amount or percentage of the dilution, the change in treat rate necessitated by the dilution, and the locations and time period of diluted detergent usage. The notification shall be sent or faxed to the address in § 80.174(c).

(b) For detergent-active polymers and detergent-active carrier oils which are reported as the product of other chemical reactants:

(1) Identification of the reactant materials and the manufacturer's acceptance criteria for determining that these materials are suitable for use in synthesizing detergent components. The manufacturer must maintain documentation, and submit it to EPA upon request, demonstrating that the acceptance criteria reported to EPA are the same criteria which the manufacturer specifies to the suppliers of the reactant materials.

(2) A Gel Permeation Chromatograph (GPC), providing the molecular weight distribution of the polymer or detergent-active carrier oil components and the concentration of each chromatographic peak representing more than one percent of the total mass. For these results to be acceptable, the GPC test procedure must include equipment calibration with a polystyrene standard or other readily attainable and generally accepted calibration standard. The identity of the calibration standard must be provided, together with the GPC characterization of the standard.

(c) For non-detergent-active carrier oils, the following parameters:

(1) T10, T50, and T90 distillation points, and end boiling point, measured according to applicable test procedures cited in § 80.46.

(2) API gravity and viscosity

(3) Concentration of oxygen, sulfur, and nitrogen, if greater than or equal to 0.5 percent (by weight) of the carrier oil

(d) Description of an FTIR-based method appropriate for identifying the detergent additive package and its detergent-active components (polymers, carrier oils, and others) both qualitatively and quantitatively, together with the actual infrared spectra of the detergent additive package and each detergent-active component obtained

by this test method. The FTIR infrared spectra submitted in connection with the registration of a detergent additive package must reflect the results of a test conducted on a sample of the additive containing the detergent-active component(s) at a concentration no lower than the concentration(s) (or the lower bound of a range of concentration) reported in the registration pursuant to paragraph (a)(3)(i)(B) of this section.

(e) To provide a basis for establishing an affirmative defense to presumptive liability pursuant to § 80.169(c)(4)(i)(D)(*2*)(*i*), specific physical parameters must be identified which the manufacturer considers adequate and appropriate, in combination with other information and sampling requirements under this subpart, for identifying the detergent additive package and monitoring its production quality control.

(1) Such parameters shall include (but need not be limited to) viscosity, density, and basic nitrogen content, unless the additive manufacturer specifically requests, and EPA approves, the substitution of other parameter(s) which the manufacturer considers to be more appropriate for a particular additive package. The request must be made in writing and must include an explanation of how the requested physical parameter(s) are helpful as indicator(s) of detergent production quality control. EPA will respond to such requests in writing; the additional parameters are not approved until the certifier receives EPA's written approval.

(2) The manufacturer shall identify a standardized measurement method, consistent with the chemical and physical nature of the detergent product, which will be used to measure each parameter. The documented ASTM repeatability for the method shall also be cited. The manufacturer's target value for each parameter in the detergent package, and the expected range of production values for each parameter, shall be specified.

(3) EPA will consider the parameter measurements to be an acceptable basis for establishing an affirmative defense to presumptive liability, if the expected range of variability differs from the target value by an amount no greater than five times the standard repeatability of the test procedure, or by no more than 10 percent of the target value, whichever is less. However, in the case of nitrogen analysis or other procedures for measuring concentrations of specific chemical compounds or elements, when the target value is less than 10 parts per million, a range of variability up to 50 percent of the target value will be considered acceptable.

(4) If a manufacturer wishes to rely on measurement methods or production variability ranges which do not conform to the above limitations, then the manufacturer must receive prior written approval from EPA in order to be assured that any related parameter measurements will be considered an acceptable basis for establishing an affirmative defense. A request for such allowance must be made in writing. It must fully justify the adequacy of the test procedure, explain why a broader range of variability is required, and provide evidence that the production detergent will perform adequately throughout the requested range of variability.

[61 FR 35366, July 5, 1996, as amended at 66 FR 55889, Nov. 5, 2001; 70 FR 69245, Nov. 14, 2005]

§ 80.163 Detergent certification options.

To be used to satisfy the detergency requirements under § 80.161(a), a detergent additive must be certified in accordance with the requirements of one or more of the options and suboptions described in this section. Where a certification option makes an additive eligible for use in a particular gasoline, that additive is also eligible for use in PRC which will be added to the particular gasoline. Under each option, the lowest additive concentration (LAC) or minimum recommended concentration registered for a detergent additive package, pursuant to § 80.161(b)(1)(ii), must equal or exceed the lowest detergent treat rate shown to be needed in the designated test fuel in order to meet the deposit control performance requirements specified in § 80.165.

(a) *National certification.* A detergent certified under a national certification option is eligible for use in gasoline which can be sold or dispensed anywhere within the United States or its territories (subject to approved State programs).

(1) *National generic certification option.* To be certified under this option, a candidate detergent must meet the deposit control performance test requirements and standards specified in § 80.165 using test fuels that conform to the requirements in § 80.164(b)(1), Table 1, Line 1. A detergent certified under this option is eligible to be used at a conforming LAC in any grade of gasoline, with or without an oxygenate component.

(i) *National nonoxygenate suboption.* The requirements for certification under this suboption are the same as those in paragraph (a)(1) of this section, except that, pursuant to § 80.164(a)(2)(ii), the certification test fuel shall contain no ethanol or other oxygenate. A detergent certified under this suboption is eligible to be used at a conforming LAC only in gasoline that does not contain an oxygenate component.

(ii) *National oxygenate-specific suboption.* The requirements for certification under this suboption are the same as those in paragraph (a)(1) of this section, except that, pursuant to § 80.164(a)(2)(iii), the certification test fuel shall contain an oxygenate compound other than ethanol. A detergent certified under this suboption is eligible to be used at a conforming LAC only in gasoline that contains no oxygenate component other than the one present in the test fuel.

(2) *National premium certification option.* To be certified under this option, a candidate detergent must meet the deposit control performance test requirements and standards specified in § 80.165 using test fuels that conform to the requirements in § 80.164(b)(1), Table 1, Line 2. A detergent certified under this option is eligible to be used at a conforming LAC only in premium grade gasoline, with or without an oxygenate component.

(i) *National premium nonoxygenate suboption.* The requirements for certification under this suboption are the same as those in paragraph (a)(2) of this section, except that, pursuant to § 80.164(a)(2)(ii), the certification test fuel shall contain no ethanol or other oxygenate. A detergent certified under this suboption is eligible to be used at a conforming LAC only in premium grade gasoline that does not contain an oxygenate component.

(ii) *National premium oxygenate-specific suboption.* The requirements for certification under this suboption are the same as those in paragraph (a)(2) of this section, except that, pursuant to § 80.164(a)(2)(iii), the certification test fuel shall contain an oxygenate compound other than ethanol. A detergent certified under this suboption is eligible to be used at a conforming LAC only in gasoline that is premium grade and contains no oxygenate component other than the one present in the test fuel.

(b) *Petroleum Administrative Defense District (PADD) Certification.* A detergent certified under a PADD certification option is eligible for use in gasoline which can be sold or dispensed to the ultimate purchaser, or to those parties who sell or dispense to the ultimate consumer, only within the PADD for which the certification was granted. The States and jurisdictions included within each PADD are specified in § 79.59(b)(3)(i) through (v), except that, for purposes of PADD certification, the State of California is excluded from PADD V.

(1) *PADD generic certification option.* To be certified under this option, a candidate detergent must meet the deposit control performance test requirements and standards specified in § 80.165 using test fuels that conform to the requirements in § 80.164(b)(1), Table 2, for a selected PADD. A detergent certified under this option is eligible to be used at a conforming LAC in any grade of gasoline, with or without an oxygenate component, provided that the gasoline is ultimately dispensed in the selected PADD.

(i) *PADD nonoxygenate suboption.* The requirements for certification under this suboption are the same as those in paragraph (b)(1) of this section, except that, pursuant to § 80.164(a)(2)(ii), the certification test fuel shall contain no

ethanol or other oxygenate. A detergent certified under this suboption is eligible to be used at a conforming LAC only in gasoline that is nonoxygenated and is ultimately dispensed in the selected PADD.

(ii) *PADD oxygenate-specific suboption.* The requirements for certification under this suboption are the same as those in paragraph (b)(1) of this section, except that, pursuant to § 80.164(a)(2)(iii), the certification test fuel shall contain an oxygenate compound other than ethanol. A detergent certified under this suboption is eligible to be used at a conforming LAC only in gasoline that contains no oxygenate component other than the one present in the test fuel and is ultimately dispensed in the selected PADD.

(2) *PADD premium certification option.* To be certified under this option, a candidate detergent must meet the deposit control performance test requirements and standards specified in § 80.165 using test fuels that conform to the requirements in § 80.164(b)(1), Table 2, for a selected PADD. A detergent certified under this option is eligible to be used at a conforming LAC only in gasoline that is premium grade (with or without an oxygenate component) and is ultimately dispensed in the selected PADD.

(i) *PADD premium nonoxygenate suboption.* The requirements for certification under this suboption are the same as those in paragraph (b)(2) of this section, except that, pursuant to § 80.164(a)(2)(ii), the certification test fuel shall contain no ethanol or other oxygenate. A detergent certified under this suboption is eligible to be used at a conforming LAC only in gasoline that is premium grade, contains no oxygenate component, and is ultimately dispensed in the selected PADD.

(ii) *PADD premium oxygenate-specific suboption.* The requirements for certification under this suboption are the same as those in paragraph (b)(2) of this section, except that, pursuant to § 80.164(a)(2)(iii), the certification test fuel shall contain an oxygenate compound other than ethanol. A detergent certified under this suboption is eligible to be used at a conforming LAC only in gasoline that is premium grade, contains no oxygenate component other than the one present in the test fuel, and is ultimately dispensed in the selected PADD.

(c) *Fuel-specific certification.* Except as provided in paragraph (c)(3) of this section, to be certified under the fuel-specific certification option, a candidate detergent must meet the deposit control performance test requirements and standards specified in § 80.165 using test fuels that conform to the requirements of § 80.164(c).

(1) A detergent certified under this option is eligible to be used at a conforming LAC only in the defined gasoline pool reported in the certification letter pursuant to § 80.161(b)(3).

(i) The gasoline pool may only include gasoline produced or distributed from the facilities covered by the fuel survey which was used to define the fuel-specific certification test fuels, pursuant to § 80.164(c)(1).

(ii) The gasoline pool must be kept segregated from any other gasoline prior to blending with the detergent additive.

(iii) Depending on the oxygenate components added to the test fuel pursuant to § 80.164(a)(2), the gasoline pool may be inclusive of all grades and all oxygenate blending characteristics (i.e., generic), or may be restricted to non-oxygenated gasoline, or to gasoline containing a specific oxygenate compound. The certification may also be restricted to premium grade gasoline. Any such use restrictions must be specified in the certification letter. Provisions in §§ 80.168 and 80.171(a)(9) through (12) related to such use restrictions also apply.

(2) Detergent certification under this option entails special initial and annual reporting requirements, specified under §§ 80.161(b)(3)(vi) and 80.164(c)(3), which necessitate that the responsible party have control over and access to the segregated gasoline pool for which the detergent is certified. For this reason, the certifying party under this option is likely to be (but is not required to be) a fuel manufacturer or detergent blender, rather than the additive manufacturer.

(3) If a certifier demonstrates that the required test fuel representing a segregated pool of gasoline meets the

deposit control performance standards specified in § 80.165 in the absence of a detergent additive, or using a detergent additive which has only PFID-control activity, then this gasoline pool (and PFID detergent, if applicable) can be certified accordingly under the fuel-specific option.

(4) Gasoline properly additized with a detergent certified under the fuel-specific option may be transferred or sold anywhere within the United States and its territories (subject to approved State programs).

(d) *CARB-Based Certification.* A valid certification under section 2257 of Title 13, California Code of Regulations (CARB certification) may be the basis for a certification under the following restrictions and conditions:

(1) A detergent certified under this option may be used at the LAC specified in the CARB certification only in gasoline that meets the requirements of California Phase II reformulated gasoline (pursuant to Title 13, Chapter 5, Article 1, Subarticle 2, California Code of Regulations, Standards for Gasoline Sold Beginning March 1, 1996). The grade(s) of California gasoline which may be so additized, and the oxygenate(s) which may be present, are as specified in the CARB certification for the detergent in question.

(2) The gasoline must be either: Additized in California; or sold or dispensed to the ultimate consumer in California (or to parties who sell or dispense to the ultimate consumer in California); or both additized and ultimately dispensed in California.

(3) A certification under this option will continue to be valid only as long as the CARB certification remains valid. The certifier must cease selling or using a detergent immediately upon being notified by CARB that the CARB certification for this detergent has been invalidated, and must notify EPA within 7 days of receipt of this notification.

[61 FR 35368, July 5, 1996]

§ 80.164 Certification test fuels.

(a) *General requirements.* This section provides specifications for the test fuels required in conjunction with the certification options described in § 80.163. For each such certification option, the associated test fuel must meet or exceed the levels of four basic fuel parameters (aromatics, fuel sulfur, olefins, and T–90) prescribed here and may also contain specified oxygenate compounds. In addition, pursuant to paragraph (b)(3) of this section, some fuels must undergo an IVD demonstration test before they are eligible to be used as test fuels under this certification program. Test fuel characteristics must be reported to EPA in the detergent certification letter required pursuant to § 80.161(b)(3).

(1) Quantitative specifications for the four basic fuel parameters, provided in paragraphs (b) and (c) of this section, refer to the levels of these parameters in the base gasoline prior to the addition of any oxygenate. The levels of the basic fuel parameters must be measured in accordance with applicable procedures in § 80.46.

(2) Oxygenate components of certification test fuels must be of fuel grade quality. The type and amount of oxygenate to be blended into the test fuel (if any) shall be as follows:

(i) To certify a detergent for generic use (i.e., for use in gasoline containing any oxygenate compound, as well as for use in nonoxygenated gasoline), the finished test fuel shall contain ethanol at 10 volume percent.

(ii) To certify a detergent specifically for use in nonoxygenated gasoline, no oxygenate compounds shall be added to the test fuel.

(iii) To certify a detergent specifically for use in gasoline blended with a specified oxygenate compound other than ethanol, the specified oxygenate must be added to the test fuel in an amount such that the finished fuel contains the oxygenate at the highest concentration at which the specific oxygenate may be used in in-use gasoline.

(3) No detergent-active substance other than the detergent additive package undergoing testing may be added to a certification test fuel. Typical nondetergent additives, such as antioxidants, corrosion inhibitors, and metal deactivators, may be present in the test fuel at the discretion of the additive certifier. In addition, any nondetergent additives (other than oxygenate compounds) which are commonly blended into gasoline and which

are known or suspected to affect IVD or PFID formation, or to reduce the ability of the detergent in question to control such deposits, should be added to the test fuel for certification testing.

(4) Certification test requirements may be satisfied for a detergent additive using more than one batch of test fuel, provided that each batch satisfies all applicable test fuel requirements under this section.

(5) Unless otherwise required by this section, finished test fuels must conform to the requirements for commercial gasoline described in ASTM D 4814–95c, ''Standard Specification for Automotive Spark-Ignition Engine Fuel'', which is incorporated by reference. This incorporation by reference was approved by the Director of the Federal Register in accordance with 5 U.S.C. 552(a) and 1 CFR part 51. Copies may be inspected at U.S. EPA, OAR, 401 M St., SW., Washington, DC 20460, or at the National Archives and Records Administration (NARA). For information on the availability of this material at NARA, call 202–741–6030, or go to: *http://www.archives.gov/federal_register/code_of_federal_regulations/ibr_locations.html*. Copies of this material may be obtained from ASTM, 1916 Race St., Philadelphia, PA 19103.

(b) *National and PADD certification test fuels*. (1) Test fuels for the national generic and premium certification options must contain levels of the designated fuel parameters which meet or exceed the applicable values in Table 1. Test fuels for the PADD generic certification options must contain levels of the designated fuel parameters which meet or exceed the applicable values in Table 2. Test fuels for the PADD premium certification options must contain levels of the designated fuel parameters which meet or exceed the applicable values in Table 3. Oxygenate requirements for the respective non-oxygenate and oxygenate-specific sub-options are specified in paragraph (a)(2) of this section.

TABLE 1—NATIONAL CERTIFICATION TEST FUELS

Certification option	Required minimum fuel parameter values				
	Sulfur (weight %)	T–90 (F)	Olefins (volume %)	Aromatics (volume %)	Oxygenate (volume %)
1. National Generic	0.034	339	11.4	31.1	10% Ethanol.
2. National Premium	0.016	332	6.5	35.9	

TABLE 2—PADD-SPECIFIC GENERIC CERTIFICATION TEST FUELS

Certification option	Required minimum fuel parameter values				
	Sulfur (weight %)	T–90 (F)	Olefins (volume %)	Aromatics (volume %)	Oxygenate (volume %)
PADD 1 Generic	0.039	343	15.4	32.1	
PADD 2 Generic	0.034	338	10.3	29.3	
PADD 3 Generic	0.032	343	12.9	29.8	10% Ethanol.
PADD 4 Generic	0.050	326	10.0	27.1	
PADD 5 Generic	0.021	337	7.6	34.5	

TABLE 3—PADD-SPECIFIC PREMIUM-GRADE CERTIFICATION TEST FUELS

Certification option	Required minimum fuel parameter values				
	Sulfur (weight %)	T–90 (F)	Olefins (volume %)	Aromatics (volume %)	Oxygenate (volume %)
PADD 1 Premium	0.018	332	9.2	38.6	
PADD 2 Premium	0.014	333	6.0	34.3	
PADD 3 Premium	0.015	334	6.0	34.6	10% Ethanol.
PADD 4 Premium	0.040	319	6.0	22.3	
PADD 5 Premium	0.011	332	4.3	36.7	

(2) National and PADD certification test fuels must either be formulated to specification from normal refinery blend stocks, or drawn from finished gasoline supplies. The source of such samples must be normally-operating gasoline production or distribution facilities located in the U.S. Samples must not be drawn from a segregated gasoline pool that is or will be covered by a fuel-specific certification under § 80.163(c) on the date when the certification information under this option is submitted to EPA.

(3) To be eligible for use in detergent additive certification testing, in addition to the specifications above, national and PADD test fuels which are specially formulated from refinery blend stocks must themselves undergo testing to demonstrate their deposit-forming tendency. For this purpose, the unadditized, nonoxygenated test fuel must be subjected to the IVD control test procedure described in § 80.165(b). At the discretion of the tester, the duration of the demonstration test may be less than 10,000 miles, provided the results satisfy the standard of this paragraph. In order to qualify for use in certification testing, the formulated fuel's test results must meet or exceed the values shown in Table 4 for the relevant certification option. If the demonstration test results do not meet these criteria, then the formulated fuel may not be used for detergent certification testing.

TABLE 4—IVD DEMONSTRATION TEST CRITERIA

Certification option	Minimum required deposit level in IVD demonstration test (mg/valve, average)					
	National	PADD 1	PADD 2	PADD 3	PADD 4	PADD 5
Generic	290	290	260	290	260	260
Premium	260	260	235	260	235	235

(c) *Fuel-specific certification test fuels.* (1) Test fuels required for fuel-specific certification must contain levels of each of the four basic fuel parameters (aromatics, olefins, T–90, and fuel sulfur) at no less than their respective 65th percentile values in the segregated gasoline pool for which the detergent certification is sought in accordance with § 80.163(c). These values must be determined by the certifier as follows:

(i) At least once monthly for at least one complete year prior to the certification, the certifier must measure the levels of the required parameters in representative fuel samples contributed to the segregated gasoline pool by each participating refinery, terminal, or other fuel production or distribution facility. The fuel parameters must be measured in accordance with the test procedures in § 80.46. If the applicability of the fuel-specific certification is to be limited to premium gasoline, then the required fuel compositional data must be collected only from samples of premium gasoline.

(ii) The fuel composition survey results, weighted according to the percentage of gasoline contributed to the segregated gasoline pool from each participating facility, shall be used to construct a percentile distribution of the measured values for each of the fuel parameters.

(iii) Data from more than one year may be used to construct the required statistical distribution provided that only the total data from complete consecutive years is used and that all survey data must have been collected within three years of the date the certification information is submitted to EPA.

(iv) At the discretion of the certifier, other fuel parameters may be used to define the certification test fuels in addition to the four required parameters. To be taken into account by EPA in case of confirmatory testing pursuant to § 80.167, such additional parameters must be surveyed and analyzed according to the same requirements applicable to the four standard parameters. In addition, any optional parameters must be measured using test procedures which conform to reasonable and customary standards of repeatability and reproducibility, and reasonable and

customary limits of detection and accuracy for the type of test procedure or analytic procedure in question.

(v) Using the percentile distributions calculated from the survey data for the four required parameters and any additional discretionary parameters, the 65th percentile value for each such parameter shall be determined. Prior to the addition of any oxygenate compound, the fuel-specific certification test fuel shall contain each specified parameter at a level or concentration no less than this 65th percentile value. Test fuel oxygenate requirements for generic, nonoxygenate, and oxygenate-specific certification suboptions are specified in paragraph (a)(2) of this section.

(2) Fuel-specific certification test fuels must either be formulated to specification from the same refinery blend stocks which are normally used to blend the gasolines included in the subject gasoline pool, or drawn from the finished fuel supplies which contribute to this pool of gasoline. Fuel-specific certification test fuels need not undergo an IVD demonstration test prior to use in certification testing.

(3) The certifier must submit an annual report to EPA within 30 days of the anniversary of the initial certification effective date. Failure to submit the annual report by the required date will invalidate the fuel-specific certification and may subject the certifier to liability and penalties under §§ 80.169 and 80.172. The purpose of the annual report is to update the information on the composition of the segregated gasoline pool that was characterized by the initial fuel survey.

(i) For this purpose, the same fuel survey and statistical analysis requirements that were conducted pursuant to paragraphs (c)(1)(i),(ii), and (iv) of this section must be repeated, using data for the most current twelve-month period from each of the production/distribution facilities that contributed to the original fuel survey.

(ii) The annual report must present the percentile distributions for each fuel parameter as determined from the new survey data and, for each measured fuel parameter, must compare the newly determined 50th percentile value with the 60th percentile value for that parameter as determined in the original fuel survey.

(iii) If the new 50th percentile level for any fuel parameter is greater than or equal to the 60th percentile level reported in the initial certification, then the fuel-specific certification is no longer valid. In such instance, the certifier must immediately discontinue the sale and use of the subject detergent under the conditions of the fuel-specific certification and must immediately notify any downstream customers/recipients of the subject detergent that the certification is no longer valid and that their use of the detergent must discontinue within seven days. To avoid liability and penalties under §§ 80.169 and 80.172, the certifier must take these remedial steps within 45 days of the anniversary of the original fuel-specific certification. Downstream customers/recipients must discontinue usage of the detergent within seven days of receipt of notification of the detergent's invalidity to avoid such liability.

(4) The fuel composition survey results which support the original test fuel specifications and the annual statistical analyses, along with related documentation on test methods and statistical procedures, shall be retained by the certifier for a period of at least five years, and shall be made available to EPA upon request.

[61 FR 35369, July 5, 1996]

§ 80.165 Certification test procedures and standards.

This section specifies the deposit control test requirements and performance standards which must be met in order to certify detergent additives for use in unleaded gasoline, pursuant to § 80.161(b)(1)(ii)(A)(*2*). These standards must be met in the context of the specific test procedures identified in paragraphs (a) and (b) of this section, except as provided in paragraph (c) of this section. In any case, the testing must be conducted and the performance standards met when the subject detergent additive is mixed in a test fuel meeting all relevant requirements of § 80.164, including the deposit-forming tendency demonstration specified in § 80.164(b)(3), if applicable. Complete test documentation must be submitted

by the certifying party within 30 days of receipt of a written request from EPA for such records.

(a) *Fuel injector deposit control testing.* (1) The required test fuel must produce no more than 5% flow restriction in any one injector when tested in accordance with ASTM D 5598–94, ''Standard Test Method for Evaluating Unleaded Automotive Spark-Ignition Engine Fuel for Electronic Port Fuel Injector Fouling,'' 1994, which is incorporated by reference. This incorporation by reference was approved by the Director of the Federal Register in accordance with 5 U.S.C. 552(a) and 1 CFR part 51. Copies may be inspected at U.S. EPA, OAR, 401 M St., SW., Washington, DC 20460, or at the National Archives and Records Administration (NARA). For information on the availability of this material at NARA, call 202–741–6030, or go to: *http://www.archives.gov/federal_register/code_of_federal_regulations/ibr_locations.html.* Copies of this material may be obtained from ASTM, 1916 Race St., Philadelphia, PA 19103.

(2) At the option of the certifier, fuel injector flow may be measured at intervals during the 10,000 mile test cycle described in ASTM D 5598–94, in addition to the flow measurements required at the completion of the test cycle, but not more than every 1,000 miles.

(b) *Intake valve deposit control testing.* The required test fuel must produce the accumulation of less than 100 mg of intake valve deposits on average when tested in accordance with ASTM D 5500–94, ''Standard Test Method for Vehicle Evaluation of Unleaded Automotive Spark-Ignition Engine Fuel for Intake Valve Deposit Formation,'' 1994, which is incorporated by reference. This incorporation by reference was approved by the Director of the Federal Register in accordance with 5 U.S.C. 552(a) and 1 CFR part 51. Copies may be inspected at U.S. EPA, OAR, 401 M St., SW., Washington, DC 20460, or at the National Archives and Records Administration (NARA). For information on the availability of this material at NARA, call 202–741–6030, or go to: *http://www.archives.gov/federal_register/code_of_federal_regulations/ibr_locations.html.* Copies of this material may be obtained from ASTM, 1916 Race St., Philadelphia, PA 19103.

(c) If conducted using test fuels meeting all relevant requirements of § 80.164, and completed prior to September 3, 1996, then the PFID and IVD control test procedures required for detergent certification in California (specified in section 2257 of Title 13, California Code of Regulations) will also be considered acceptable. California Air Resources Board, ''Test Method for Evaluating Port Fuel Injector (PFI) Deposits in Vehicle Engines'', March 1, 1991, and California Air Resources Board, ''BMW—10,000 Miles Intake Valve Test Procedure'', March 1, 1991, are incorporated by reference. This incorporation by reference was approved by the Director of the Federal Register in accordance with 5 U.S.C. 552(a) and 1 CFR part 51. Copies may be inspected at U.S. EPA, OAR, 401 M St., SW., Washington, DC 20460, or at the National Archives and Records Administration (NARA). For information on the availability of this material at NARA, call 202–741–6030, or go to: *http://www.archives.gov/federal_register/code_of_federal_regulations/ibr_locations.html.* Copies of this material may be obtained from the California Air Resource Board, Stationary Source Division, 2020 L Street, PO Box 2815, Sacramento, CA, 95814.

[61 FR 35371, July 5, 1996]

§ 80.166 Carburetor deposit control performance test and test fuel guidelines.

EPA will use the guidelines in this section to evaluate the adequacy of carburetor deposit control test data, used to support the minimum concentration recommended for detergents used in leaded gasoline pursuant to § 80.161(b)(1)(ii)(B).

(a) *Carburetor Deposit Control Test Procedure and Performance Standard Guidelines.* For demonstration of carburetor deposit control performance, any generally accepted vehicle, engine, or bench test procedure and associated performance standard for carburetor deposit control will be considered adequate. Port and throttle body fuel injector deposit control test data will also be considered to be adequate demonstration of an additive's ability to

control carburetor deposits. Examples of acceptable test procedures for demonstration of carburetor deposit control, in addition to the fuel injector test procedure listed in § 80.165(a), are contained in the following references:

(1) ''Test Method for Evaluating Port Fuel Injector (PFI) Deposits in Vehicle Engines'', March 1, 1991, Section 2257, Title 13, California Code of Regulations.

(2) ''A Vehicle Test Technique for Studying Port Fuel Injector Deposits—A Coordinating Research Council Program'', Robert Tupa et al., SAE Technical paper No. 890213, 1989.

(3) ''The Effects of Fuel Composition and Additives on Multiport Fuel Injector Deposits'', Jack Benson et al., SAE Technical Paper Series No. 861533, 1986.

(4) ''Injector Deposits—The Tip of Intake System Deposit Problems'', Brian Taneguchi, et al., SAE Technical Paper Series No. 861534, 1986.

(5) ''Fuel Injector, Intake Valve, and Carburetor Detergency Performance of Gasoline Additives'', C.H. Jewitt et al., SAE Technical Paper No. 872114, 1987.

(6) ''Carburetor Cleanliness Test Procedure, State-of-the-Art Summary, Report: 1973–1981'', Coordinating Research Council, CRC Report No. 529, Coordinating Research Council Inc. (CRC), 219 perimeter Center Parking, Atlanta, Georgia, 30346.

(b) *Carburetor Deposit Control Test Fuel Guidelines*. (1) The gasoline used in the tests described in paragraph (a) of this section must contain the detergent-active components of the subject detergent additive package in an amount which corresponds to the minimum recommended concentration recorded in the respective detergent registration, or less than this amount.

(2) The test fuel must not contain any detergent-active components other than those recorded in the subject detergent certification.

(3) The composition of the test fuel used in carburetor deposit control testing, conducted to support the claimed effectiveness of detergents used in leaded gasoline, should be reasonably typical of in-use gasoline in its tendency to form carburetor deposits (or more severe than typical in-use fuels) as defined by the olefin and sulfur content. A test fuel conforming to these compositional guidelines may be sampled directly from finished gasolines or may be blended to specification using typical refinery blend stocks. Test data using leaded fuels is preferred for this purpose, but data collected using unleaded fuels may also be acceptable provided that some correlation with additive performance in leaded fuels is available.

[61 FR 35372, July 5, 1996]

§ 80.167 Confirmatory testing.

EPA may test a detergent to confirm that the required performance levels are met. Based on the findings of this confirmatory testing, a detergent certification may be denied or revoked under the provisions of § 80.161(e).

(a) Confirmatory testing conducted to evaluate the validity of detergent certifications under the national, PADD, or fuel-specific options will generally entail a single vehicle test using the procedures detailed in § 80.165. The test fuel(s) used in conducting confirmatory certification testing will contain the specified fuel parameters at or below the minimum levels specified in § 80.164, and will otherwise conform to the applicable certification test fuel specifications therein.

(b) Confirmatory certification testing conducted to evaluate the validity of CARB-based detergent certifications will use the subject detergent in test fuel(s) containing the relevant fuel parameters at levels no greater than the maximum levels for which the CARB certification was granted. The test procedures will be conducted pursuant to the procedures specified under section 2257 of Title 13, California Code of Regulations.

(c) Confirmatory testing conducted to evaluate the validity of registration and certification information specific to detergent use in leaded gasoline will use the subject detergent in a test fuel containing the test fuel parameters at levels no greater than those prescribed in § 80.164. EPA will make all reasonable efforts to use the same test procedure for confirmatory testing purposes as was used by the certifier in conducting deposit control performance testing.

(d) When EPA decides to conduct confirmatory testing on a fuel or additive which is not readily available in the open market, EPA may request that the detergent certifier and/or manufacturer of such fuel or additive furnish a sample in the needed quantity. If testing is conducted to evaluate the validity of a detergent certification under the fuel-specific option, the detergent blender must supply EPA with test fuel, or with blend stocks with which to formulate such test fuel, in sufficient quantity to conduct the specified deposit control performance testing. The fuel or additive manufacturer shall comply with a sample request made pursuant to this paragraph within 30 days of receipt of the request.

[61 FR 35372, July 5, 1996]

§ 80.168 Detergent certification program controls and prohibitions.

(a)(1) No person shall sell, offer for sale, dispense, supply, offer for supply, transport, or cause the transportation of gasoline to the ultimate consumer for use in motor vehicles or in any off-road engines (except as provided in § 80.173), or to a gasoline retailer or wholesale purchaser-consumer, and no person shall detergent-additize gasoline, unless such gasoline is additized in conformity with the requirements of § 80.161. No person shall cause the presence of any gasoline in the gasoline distribution system unless such gasoline is additized in conformity with the requirements of § 80.161.

(2) Gasoline has been additized in conformity with the requirements of § 80.161 when the detergent component satisfies the requirements of § 80.161 and when:

(i) The gasoline has been additized in conformity with the detergent composition and purpose-in-use specifications of a detergent certified in accordance with this subpart, and in accordance with at least the minimum concentration specifications of that detergent as certified or as otherwise provided under § 80.161(d); or

(ii) The gasoline is composed of two or more commingled gasolines and each component gasoline has been additized in conformity with the detergent composition and purpose-in-use specifications of a detergent certified in accordance with this subpart, and in accordance with at least the minimum concentration specifications of that detergent as certified or as otherwise provided under § 80.161(d); or

(iii) The gasoline is composed of a gasoline commingled with a post-refinery component (PRC), and both of these components have been additized in conformity with the detergent composition and use specifications of a detergent certified in accordance with this subpart, and in accordance with at least the minimum concentration specifications of that detergent as certified or as otherwise provided under § 80.161(d).

(b) No person shall blend detergent into gasoline or PRC unless such person complies with the volumetric additive reconciliation requirements of § 80.170.

(c) No person shall sell, offer for sale, dispense, supply, offer for supply, store, transport, or cause the transportation of any gasoline, detergent, or detergent-additized PRC, unless the product transfer document for the gasoline, detergent or detergent-additized PRC complies with the requirements of § 80.171.

(d) No person shall refine, import, manufacture, sell, offer for sale, dispense, supply, offer for supply, store, transport, or cause the transportation of any detergent that is to be used as a component of detergent-additized gasoline or detergent-additized PRC unless such detergent conforms with the composition specifications of a detergent certified in accordance with this subpart and the detergent otherwise complies with the requirements of § 80.161. No person shall cause the presence of any detergent in the detergent, PRC, or gasoline distribution systems unless such detergent complies with the requirements of § 80.161.

(e)(1) No person shall sell, offer for sale, dispense, supply, offer for supply, transport, or cause the transportation of detergent-additized PRC unless the PRC has been additized in conformity with the requirements of § 80.161. No person shall cause the presence in the PRC or gasoline distribution systems of any detergent-additized PRC that fails to conform to the requirements of § 80.161.

(2) PRC has been additized in conformity with the requirements of § 80.161 when the detergent component satisfies the requirements of § 80.161 and when:

(i) The PRC has been additized in accordance with the detergent composition and use specifications of a detergent certified in accordance with this subpart and in conformity with at least the minimum concentration specifications of that detergent as certified or as otherwise provided under § 80.161(d), or

(ii) The PRC is composed of two or more commingled PRCs, and each component has been additized in accordance with the detergent composition and use specifications of a detergent certified in accordance with this subpart, and in conformity with at least the minimum concentration specifications of that detergent as certified or as otherwise provided under § 80.161(d).

[61 FR 35373, July 5, 1996]

§ 80.169 Liability for violations of the detergent certification program controls and prohibitions.

(a) *Persons Liable*—(1) *Gasoline nonconformity*. Where gasoline contained in any storage tank at any facility owned, leased, operated, controlled or supervised by any gasoline refiner, importer, carrier, distributor, reseller, retailer, wholesale purchaser-consumer, oxygenate blender, or detergent blender, is found in violation of any of the prohibitions specified in § 80.168(a), the following persons shall be deemed in violation:

(i) Each gasoline refiner, importer, carrier, distributor, reseller, retailer, wholesale purchaser-consumer, oxygenate blender, or detergent blender, who owns, leases, operates, controls or supervises the facility (including, but not limited to, a truck or individual storage tank) where the violation is found;

(ii) Each gasoline refiner, importer, distributor, reseller, retailer, wholesale purchaser-consumer, oxygenate blender, detergent manufacturer, distributor, or blender, who refined, imported, manufactured, sold, offered for sale, dispensed, supplied, offered for supply, stored, detergent additized, transported, or caused the transportation of the detergent-additized gasoline (or the base gasoline component, the detergent component, or the detergent-additized post-refinery component of the gasoline) that is in violation, and each such party that caused the gasoline that is in violation to be present in the gasoline distribution system; and

(iii) Each gasoline carrier who dispensed, supplied, stored, or transported any gasoline in the storage tank containing gasoline found to be in violation, and each detergent carrier who dispensed, supplied, stored, or transported the detergent component of any PRC or gasoline in the storage tank containing gasoline found to be in violation, provided that EPA demonstrates, by reasonably specific showings by direct or circumstantial evidence, that the gasoline or detergent carrier caused the violation.

(2) *Post-refinery component non-conformity*. Where detergent-additized PRC contained in any storage tank at any facility owned, leased, operated, controlled or supervised by any gasoline refiner, importer, carrier, distributor, reseller, retailer, wholesale purchaser-consumer, oxygenate blender, detergent manufacturer, carrier, distributor, or blender, is found in violation of the prohibitions specified in § 80.168(e), the following persons shall be deemed in violation:

(i) Each gasoline refiner, importer, carrier, distributor, reseller, retailer, wholesale-purchaser consumer, oxygenate blender, detergent manufacturer, carrier, distributor, or blender, who owns, leases, operates, controls or supervises the facility (including, but not limited to, a truck or individual storage tank) where the violation is found;

(ii) Each gasoline refiner, importer, distributor, reseller, retailer, wholesale purchaser-consumer, oxygenate blender, detergent manufacturer, distributor, or blender, who sold, offered for sale, dispensed, supplied, offered for supply, stored, detergent additized, transported, or caused the transportation of the detergent-additized PRC (or the detergent component of the PRC) that is in violation, and each such party that caused the PRC that is in violation to be present in the PRC or gasoline distribution systems; and

(iii) Each carrier who dispensed, supplied, stored, or transported any detergent-additized PRC in the storage tank containing PRC that is in violation, and each detergent carrier who dispensed, supplied, stored, or transported the detergent component of any detergent-additized PRC which is in the storage tank containing detergent-additized PRC found to be in violation, provided that EPA demonstrates by reasonably specific showings by direct or circumstantial evidence, that the gasoline or detergent carrier caused the violation.

(3) *Detergent non-conformity*. Where the detergent (prior to additization) contained in any storage tank or container found at any facility owned, leased, operated, controlled or supervised by any gasoline refiner, importer, carrier, distributor, reseller, retailer, wholesale purchaser-consumer, oxygenate blender, detergent manufacturer, carrier, distributor, or blender, is found in violation of the prohibitions specified in § 80.168(d), the following persons shall be deemed in violation:

(i) Each gasoline refiner, importer, carrier, distributor, reseller, retailer, wholesale purchaser-consumer, oxygenate blender, detergent manufacturer, carrier, distributor, or blender, who owns, leases, operates, controls or supervises the facility (including, but not limited to, a truck or individual storage tank) where the violation is found;

(ii) Each gasoline refiner, importer, distributor, reseller, retailer, wholesale purchaser-consumer, oxygenate blender, detergent manufacturer, distributor, or blender, who sold, offered for sale, dispensed, supplied, offered for supply, stored, transported, or caused the transportation of the detergent that is in violation, and each such party that caused the detergent that is in violation to be present in the detergent, gasoline, or PRC distribution systems; and

(iii) Each gasoline or detergent carrier who dispensed, supplied, stored, or transported any detergent which is in the storage tank or container containing detergent found to be in violation, provided that EPA demonstrates, by reasonably specific showings by direct or circumstantial evidence, that the gasoline or detergent carrier caused the violation.

(4) *Volumetric additive reconciliation*. Where a violation of the volumetric additive reconciliation requirements established by § 80.168(b) has occurred, the following persons shall be deemed in violation:

(i) Each detergent blender who owns, leases, operates, controls or supervises the facility (including, but not limited to, a truck or individual storage tank) where the violation has occurred; and

(ii) Each gasoline refiner, importer, carrier, distributor, reseller, retailer, wholesale purchaser-consumer, or oxygenate blender, and each detergent manufacturer, carrier, distributor, or blender, who refined, imported, manufactured, sold, offered for sale, dispensed, supplied, offered for supply, stored, transported, or caused the transportation of the detergent-additized gasoline, the base gasoline component, the detergent component, or the detergent-additized PRC of the gasoline that is in violation, provided that EPA demonstrates, by reasonably specific showings by direct or circumstantial evidence, that such person caused the violation.

(5) *Product transfer document*. Where a violation of § 80.168(c) is found at a facility owned, leased, operated, controlled, or supervised by any gasoline refiner, importer, carrier, distributor, reseller, retailer, wholesale purchaser-consumer, oxygenate blender, detergent manufacturer, carrier, distributor, or blender, the following persons shall be deemed in violation: each gasoline refiner, importer, carrier, distributor, reseller, retailer, wholesale purchaser-consumer, oxygenate blender, detergent manufacturer, carrier, distributor, or blender, who owns, leases, operates, control or supervises the facility (including, but not limited to, a truck or individual storage tank) where the violation is found.

(b) *Branded Refiner Vicarious Liability*. Where any violation of the prohibitions specified in § 80.168 has occurred, with the exception of violations of § 80.168(c), a refiner will also be deemed liable for violations occurring at a facility operating under such refiner's corporate, trade, or brand name or that of any of

its marketing subsidiaries. For purposes of this section, the word facility includes, but is not limited to, a truck or individual storage tank.

(c) *Defenses*. (1) In any case in which a gasoline refiner, importer, distributor, carrier, reseller, retailer, wholesale purchaser-consumer, oxygenate blender, detergent distributor, carrier, or blender, is in violation of any of the prohibitions of § 80.168, pursuant to paragraph (a) or (b) of this section as applicable, the regulated party shall be deemed not in violation if it can demonstrate:

(i) That the violation was not caused by the regulated party or its employee or agent (unless otherwise provided in this paragraph (c));

(ii) That product transfer documents account for the gasoline, detergent, or detergent-additized PRC in violation and indicate that the gasoline, detergent, or detergent-additized PRC satisfied relevant requirements when it left the party's control; and

(iii) That the party has fulfilled the requirements of paragraphs (c) (2) or (3) of this section, as applicable.

(2) *Branded refiner*. Where a branded refiner is in violation of any of the prohibitions of § 80.168 as a result of violations occurring at a facility (including, but not limited to, a truck or individual storage tank) which is operating under the corporate, trade or brand name of a refiner or that of any of its marketing subsidiaries, the refiner shall be deemed not in violation if it can demonstrate, in addition to the defense requirements stated in paragraph (c)(1) of this section, that the violation was caused by:

(i) An act in violation of law (other than these regulations), or an act of sabotage or vandalism, whether or not such acts are violations of law in the jurisdiction where the violation of the prohibitions of § 80.168 occurred; or

(ii) The action of any gasoline refiner, importer, reseller, distributor, oxygenate blender, detergent manufacturer, distributor, blender, or retailer or wholesale purchaser-consumer supplied by any of these persons, in violation of a contractual undertaking imposed by the refiner designed to prevent such action, and despite the implementation of an oversight program, including, but not limited to, periodic review of product transfer documents by the refiner to ensure compliance with such contractual obligation; or

(iii) The action of any gasoline or detergent carrier, or other gasoline or detergent distributor not subject to a contract with the refiner but engaged by the refiner for transportation of gasoline, PRC, or detergent, to a gasoline or detergent distributor, oxygenate blender, detergent blender, gasoline retailer or wholesale purchaser consumer, despite specification or inspection of procedures or equipment by the refiner which are reasonably calculated to prevent such action.

(iv) In this paragraph (c)(2), to show that the violation ''was caused'' by any of the specified actions, the party must demonstrate by reasonably specific showings, by direct or circumstantial evidence, that the violation was caused or must have been caused by another.

(3) *Detergent blender*. In any case in which a detergent blender is liable for violating any of the prohibitions of § 80.168, the detergent blender shall not be deemed in violation if it can demonstrate, in addition to the defense requirements stated in paragraph (c)(1) of this section, the following:

(i) That it obtained or supplied, as appropriate, prior to the detergent blending, accurate written instructions from the detergent manufacturer or other party with knowledge of such instructions, specifying the appropriate LAC for the detergent, as specified in § 80.161(b)(1)(ii), together with any use restrictions which pertain to this LAC pursuant to the detergent's certification; and

(ii) That it has implemented a quality assurance program that includes, but is not limited to, a periodic review of its supporting product transfer and volume measurement documents to confirm the correctness of its product transfer and volumetric additive reconciliation documents created for all products it additized.

(4) *Detergent manufacturer*—(i) *Presumptive Liability Affirmative Defense*. Notwithstanding the provisions of paragraph (c)(1) of this section, in any case in which a detergent manufacturer is liable for violating any of the prohibitions of § 80.168, the detergent

manufacturer shall be deemed not in violation if it can demonstrate each of the following:

(A) Product transfer documents which account for the detergent component of the product in violation and which indicate that such detergent satisfied all relevant requirements when it left the detergent manufacturer's control.

(B) Written blending instructions which, pursuant to § 80.161(c), were supplied by the detergent manufacturer to its customer who purchased or obtained from the manufacturer the detergent component of the product determined to be in violation. The written blending instructions must have been supplied by the manufacturer prior to the customer's use or sale of the detergent. The instructions must accurately specify both the appropriate LAC for the detergent, pursuant to § 80.161(b)(1)(ii), plus any use restrictions which may pertain to this LAC pursuant to the detergent's certification.

(C) If the detergent batch used in the noncomplying product was produced less than one year before the manufacturer was notified by EPA of the possible violation, then the manufacturer must provide FTIR test results for the batch in question.

(*1*) The FTIR analysis may have been conducted on the subject detergent batch at the time it was manufactured, or may be conducted on a sample of that batch which the manufacturer retained for such purpose at the time the batch was manufactured.

(*2*) To establish that, when it left the manufacturer's control, the detergent component of the noncomplying product was in conformity with the chemical composition and concentration specifications reported pursuant to § 80.161(b), the FTIR test results for the detergent batch used in the noncomplying product must be consistent with the FTIR results submitted at the time of registration pursuant to § 80.162(d).

(D) If the detergent batch used in the noncomplying product was produced more than one year prior to the manufacturer's notification by EPA of the possible violation, then the manufacturer must provide either:

(*1*) FTIR test results for the batch in question as specified in the preceding paragraph (c)(4)(i)(C) of this § 80.169(c); or

(*2*) The following materials:

(*i*) Documentation for the batch in question, showing that its measured viscosity, density, and basic nitrogen content, or any other such physical parameter(s) which EPA may have approved for monitoring production quality control, were within the acceptable range of production values specified in the certification pursuant to § 80.162(e); and

(*ii*) If the detergent registration identifies polymeric component(s) of the detergent package as the product(s) of other chemical reactants, documentation that the reagents used to synthesize the detergent batch in question were the same as those specified in the registration and that they met the manufacturer's normal acceptance criteria reported pursuant to § 80.162(b)(1).

(ii) *Detergent manufacturer causation liability*. In any case in which a detergent manufacturer is liable for a violation of § 80.168, and the manufacturer establishes an affirmative defense to such liability pursuant to § 80.169(c)(4)(i), the detergent manufacturer will nonetheless be deemed liable for the violation of § 80.168 if EPA can demonstrate, by reasonably specific showings by direct or circumstantial evidence, that the detergent manufacturer caused the violation.

(5) *Defense against liability where more than one party may be liable for VAR violations*. In any case in which a party is presumptively or vicariously liable for a violation of § 80.170, except for the VAR record requirements pursuant to § 80.170(g), such party shall not be deemed liable if it can establish the following:

(i) Prior to the violation it had entered into a written contract with another potentially liable detergent blender party (''the assuming party''), under which that other party assumed legal responsibility for fulfilling the VAR requirement that had been violated;

(ii) The contract included reasonable oversight provision to ensure that the

assuming party fulfilled its VAR responsibilities (including, but not limited to, periodic review of VAR records) and the oversight provision was actually implemented by the party raising the defense;

(iii) The assuming party is fiscally sound and able to pay its penalty for the VAR violation; and

(iv) The employees or agents of the party raising the defense did not cause the violation.

(6) *Defense to liability for gasoline nonconformity violations caused solely by the addition of misadditized ethanol or other PRC to the gasoline.* In any case in which a party is presumptively or vicariously liable for a gasoline non-conformity violation of § 80.168(a) caused solely by another party's addition of misadditized ethanol or other PRC to the gasoline, the former party shall not be deemed liable for the violation, provided that it can establish that it has fulfilled the defense requirements of paragraphs (c)(1) (i) and (ii) of this section.

(7) *Detergent tank transitioning defenses.* The commingling of two detergents in the same detergent storage tank will not be deemed to violate or cause violations of any of the provisions of this subpart, provided the following conditions are met:

(i) The commingling must occur during a legitimate detergent transitioning event, *i.e.*, a shift from the use of one detergent to another through the delivery of the new detergent into the same tank that contains the original detergent; and

(ii) Any use restrictions applicable to the new detergent's certification also apply to the combined detergents; and

(iii) The commingling event must be documented, either on the VAR formula record or on attached supporting records; and

(iv) Notwithstanding any contrary provisions in § 80.170, a VAR formula record must be created for the combined detergents. The VAR compliance period must begin no later than the time of the commingling event. However, at the blender's option, the compliance period may begin earlier, thus including use of the uncombined original detergent within the same period, provided that the 31-day limitation pursuant to § 80.170(a)(6) is not exceeded; and

(v) The VAR formula record must also satisfy the requirements in one of the following paragraphs (c)(7)(v) (A) through (C) of this section, whichever applies to the commingling event. If neither paragraph (c)(7)(v) (A) nor (B) of this section initially applies, then the blender may drain and subsequently redeliver the original detergent into the tank in restricted amounts, in order to meet the conditions of paragraph (c)(7)(v) (A) or (B) of this section. Otherwise, the blender must comply with paragraph (c)(7)(v)(C) of this section.

(A) If both detergents have the same LAC, and the original detergent accounts for no more than 20 percent of the tank's total delivered volume after addition of the new detergent, then the VAR formula record is required to identify only the use of the new detergent.

(B) If the two detergents have different LACs and the original detergent accounts for 10 percent or less of the tank's total delivered volume after addition of the new detergent, then the VAR formula record is required to identify only the use of the new detergent, and must attain the LAC of the new detergent. If the original detergent's LAC is greater than that of the new detergent, then the compliance period may begin earlier than the date of the commingling event (pursuant to paragraph (c)(7)(iv) of this section) only if the original detergent does not exceed 10 percent of the total detergent used during the compliance period.

(C) If neither of the preceding paragraphs (c)(7)(v) (A) or (B) of this section applies, then the VAR formula record must identify both of the commingled detergents, and must use and attain the higher LAC of the two detergents. Once the commingled detergent has been depleted by an amount equal to the volume of the original detergent in the tank at the time the new detergent was added, subsequent VAR formula records must identify and use the LAC of only the new detergent.

(8) *Transition from noncertified to certified detergent.* Notwithstanding the prohibitions in §§ 80.161(a)(3) and 80.168,

after June 30, 1997, the addition to gasoline or PRC of a detergent which has not been certified pursuant to § 80.161 shall not be deemed to violate or cause violations of provisions of this subpart, provided that all of the following conditions are met:

(i) The detergent was received by the detergent blender prior to July 1, 1997 and is used prior to January 1, 1998. Documentation which supports these dates must be maintained for at least five years and must be available for EPA's inspection upon request;

(ii) The detergent is added to gasoline or PRC only in combination with a certified detergent and, at any one time, accounts for no more than 10 percent of the detergent tank's delivered volume;

(iii) The total volume of detergent added to the gasoline or PRC is sufficient to attain the LAC of the certified detergent; and

(iv) Use restrictions associated with the certified detergent are adhered to.

(9) *Procedures for curing use restrictions.* In the case of a fuel product which has been additized with a detergent under the conditions of a use-restricted certification (pursuant to § 80.163), the use restriction can be negated (''cured'') by application of the procedures in this paragraph (c)(9). A party shall not be liable for violations of § 80.168(a) or (e) caused solely by the additization or subsequent use of gasoline or PRC in violation of such use restriction, provided that the following steps and conditions are applied before EPA has identified the nonconformity and prior to the sale or transfer of nonconforming product to the ultimate consumer:

(i) Additional detergent must be added in sufficient quantity to provide effective deposit control, taking into account both the amount of detergent previously added and the final anticipated volume and composition of the subject fuel product.

(ii) The additional detergent may be either the original detergent or a different detergent, so long as the additional detergent has been separately certified both for use with the subject fuel product and for use with the type of fuel product associated with the restriction which the party wishes to negate by the curing procedure. Detergents which have not been separately certified for both types of fuel products are not eligible to be used for this curing procedure.

(iii) If a fuel product has been detergent additized under the conditions of a use-restricted certification which would preclude the addition of an oxygenate or other PRC, then such oxygenate or other PRC may nevertheless be added to that fuel product under this curing procedure, provided that additional eligible detergent is added, in an amount which equals or exceeds the number of gallons (D_A) derived from the following equation:

$$\text{Additional Detergent Volume} = D_A = Vp(LAC_2 - LAC_1) + V(1 - p)LAC_2$$

where:

V = Final volume of fuel product (in gallons)

p = Fraction of final fuel product composed of the original (uncombined) fuel product

LAC_2 = Detergent's LAC certified for the final combined fuel product (in gallons of detergent per 1,000 gallons of fuel product)

LAC_1 = Detergent's LAC certified for the original (uncombined) fuel product (in gallons of detergent per 1,000 gallons of fuel product)

(iv) In other instances in which gasoline or PRC has been additized in violation of a detergent use restriction, and no additional fuel components are to be added, such use restriction can be cured by the addition of eligible detergent in an amount which equals or exceeds the number of gallons (DA) derived from the following equation, which is a simplified version of the previous equation:

$$\text{Additional Detergent Volume} = D_A = V(LAC_2 - LAC_1)$$

where:

V = Volume of fuel product (in gallons) to be cured of the use restriction

LAC_2 = Detergent's LAC certified for the fuel product without the use restriction (in gallons of detergent per 1,000 gallons of fuel product)

LAC_1 = Detergent's LAC certified for the fuel product with the use restriction to be cured (in gallons of detergent per 1,000 gallons of fuel product)

(v) In all such instances, a curing VAR must be created and maintained, which documents the use of the appropriate equation as specified above, and

otherwise complies with the requirements of § 80.170(f)(6).

[61 FR 35373, July 5, 1996, as amended at 61 FR 58747, Nov. 18, 1996; 66 FR 55890, Nov. 5, 2001]

§ 80.170 Volumetric additive reconciliation (VAR), equipment calibration, and recordkeeping requirements.

This section contains requirements for automated detergent blending facilities and hand-blending detergent facilities. All gasoline and all PRC intended for use in gasoline must be additized unless otherwise noted in supporting VAR records, and must be accounted for in VAR records. The VAR reconciliation standard is attained under this section when the actual concentration of detergent used per VAR formula record equals or exceeds the applicable LAC certified for that detergent pursuant to § 80.161(b)(3)(ix) or, if appropriate, § 80.161(d). If a given detergent package has been certified under more than one certification option pursuant to § 80.163, then a separate VAR formula record must be created for gasoline or PRC additized on the basis of each certification and its respective LAC. In such cases, the amount of the detergent used under different certification options must be accurately and separately measured, either through the use of a separate storage tank, a separate meter, or some other measurement system that is able to accurately distinguish its use. Recorded volumes of gasoline, detergent, and PRC must be expressed to the nearest gallon (or smaller units), except that detergent volumes of five gallons or less must be expressed to the nearest tenth of a gallon (or smaller units). However, if the blender's equipment cannot accurately measure to the nearest tenth of a gallon, then such volumes must be rounded downward to the next lower gallon. PRC included in the reconciliation must be identified. Each VAR formula record must also contain the following information:

(a) *Automated blending facilities.* In the case of an automated detergent blending facility, for each VAR period, for each detergent storage system and each detergent in that storage system, the following must be recorded:

(1) The manufacturer and commercial identifying name of the detergent additive package being reconciled, the LAC, and any use restriction applicable to the LAC. The LAC must be expressed in terms of gallons of detergent per thousand gallons of gasoline or PRC, and expressed to four digits. If the detergent storage system which is the subject of the VAR formula record is a proprietary system under the control of a customer, this fact must be indicated on the record.

(2) The total volume of detergent blended into gasoline and PRC, in accordance with one of the following paragraphs (a)(2)(i) or (ii) of this section, as applicable.

(i) For a facility which uses in-line meters to measure detergent usage, the total volume of detergent measured, together with supporting data which includes one of the following: the beginning and ending meter readings for each meter being measured, the metered batch volume measurements for each meter being measured, or other comparable metered measurements. The supporting data may be supplied on the VAR formula record or in the form of computer printouts or other comparable VAR supporting documentation.

(ii) For a facility which uses a gauge to measure the inventory of the detergent storage tank, the total volume of detergent shall be calculated from the following equation:

$$\text{Detergent Volume} = (A) - (B) + (C) - (D)$$

where:

A = Initial detergent inventory of the tank
B = Final detergent inventory of the tank
C = Sum of any additions to detergent inventory
D = Sum of any withdrawals from detergent inventory for purposes other than the additization of gasoline or PRC.

The value of each variable in this equation must be separately recorded on the VAR formula record. In addition, a list of each detergent addition included in variable C and a list of each detergent withdrawal included in variable D must be provided, either on the formula record or as VAR supporting documentation.

(3) The total volume of gasoline plus PRC to which detergent has been added, together with supporting data which includes one of the following: the beginning and ending meter measurements for each meter being measured, the metered batch volume measurements for each meter being measured, or other comparable metered measurements. The supporting data may be supplied on the VAR formula record or in the form of computer printouts or other comparable VAR supporting documentation. If gasoline has intentionally been overadditized in anticipation of the later addition of unadditized PRC, then the total volume of gasoline plus PRC recorded must include the expected amount of unadditized PRC to be added later. In addition, the amount of gasoline which was overadditized for this purpose must be specified.

(4) The actual detergent concentration, calculated as the total volume of detergent added (pursuant to paragraph (a)(2) of this section), divided by the total volume of gasoline plus PRC (pursuant to paragraph (a)(3) of this section). The concentration must be calculated and recorded to four digits.

(5) A list of each detergent concentration rate initially set for the detergent that is the subject of the VAR record, together with the date and description of each adjustment to any initially set concentration. The concentration adjustment information may be supplied on the VAR formula record or in the form of computer printouts or other comparable VAR supporting documentation. No concentration setting is permitted below the applicable certified LAC, except as may be modified pursuant to § 80.161(d) or as described in paragraph (a)(7) of this section.

(6) The dates of the VAR period, which shall be no longer than thirty-one days. If the VAR period is contemporaneous with a calendar month, then specifying the month will fulfill this requirement; if not, then the beginning and ending dates and times of the VAR period must be listed. The times may be supplied on the VAR formula record or in supporting documentation. Any adjustment to any detergent concentration rate more than 10 percent over the concentration rate initially set in the VAR period shall terminate that VAR period and initiate a new VAR period, except as provided in paragraph (a)(7) of this section.

(7) The concentration setting for a detergent injector may be set below the applicable LAC, or it may be adjusted more than 10 percent above the concentration initially set in the VAR period without terminating that VAR period, provided that:

(i) The purpose of the change is to correct a batch misadditization prior to the end of the VAR period and prior to the transfer of the batch to another party, or to correct an equipment malfunction; and

(ii) The concentration is immediately returned after the correction to a concentration that fulfills the requirements of paragraphs (a) (5) and (6) of this section; and

(iii) The blender creates and maintains documentation establishing the date and adjustments of the correction; and

(iv) If the correction is initiated only to rectify an equipment malfunction, and the amount of detergent used in this procedure is not added to gasoline within the compliance period, then this amount is subtracted from the detergent volume listed on the VAR formula record.

(8) If unadditized gasoline has been transferred from the facility, other than bulk transfers from refineries or pipelines to non-retail outlets or non-WPC facilities, the total amount of such gasoline must be specified.

(b) *Non-automated facilities.* In the case of a facility in which hand blending or any other non-automated method is used to blend detergent, for each detergent and for each batch of gasoline and each batch of PRC to which the detergent is being added, the following shall be recorded:

(1) The manufacturer and commercial identifying name of the detergent additive package being reconciled, the LAC, and any use restriction applicable to the LAC. The LAC must be expressed in terms of gallons of detergent per thousand gallons of gasoline or PRC, and expressed to four digits.

(2) The date of the additization that is the subject of the VAR formula record.

(3) The volume of added detergent.

(4) The volume of the gasoline and/or PRC to which the detergent has been added. If gasoline has intentionally been overadditized in anticipation of the later addition of unadditized PRC, then the total volume of gasoline plus PRC recorded must include the expected amount of unadditized PRC to be added later. In addition, the amount of gasoline which was overadditized for this purpose must be specified.

(5) The brand (if known), grade, and leaded/unleaded status of gasoline, and/or the type of PRC.

(6) The actual detergent concentration, calculated as the volume of added detergent (pursuant to paragraph (b)(3) of this section), divided by the volume of gasoline and/or PRC (pursuant to paragraph (b)(4) of this section). The concentration must be calculated and recorded to four digits.

(c) Every VAR formula record created pursuant to paragraphs (a) and (b) of this section shall contain the following:

(1) The signature of the creator of the VAR record;

(2) The date of the creation of the VAR record; and

(3) A certification of correctness by the creator of the VAR record.

(d) Electronically-generated VAR formula and supporting records.

(1) Electronically-generated records are acceptable for VAR formula records and supporting documentation (including PTDs), provided that they are complete, accessible, and easily readable. VAR formula records must also be stored with access and audit security, which must restrict to a limited number of specified people those who have the ability to alter or delete the records. In addition, parties maintaining records electronically must make available to EPA the hardware and software necessary to review the records.

(2) Electronically-generated VAR formula records may use an electronic user identification code to satisfy the signature requirements of paragraph (c)(1) of this section, provided that:

(i) The use of the ID is limited to the record creator; and

(ii) A paper record is maintained, which is signed and dated by the VAR formula record creator, acknowledging that the use of that particular user ID on a VAR formula record is equivalent to his/her signature on the document.

(e) Automated detergent blenders must calibrate their detergent equipment once in each calendar half year, with the acceptable calibrations being no less than one hundred twenty days apart. Equipment recalibration is also required each time the detergent package is changed, unless written documentation indicates that the new detergent package has the same viscosity as the previous detergent package. Detergent package change calibrations may be used to satisfy the semiannual requirement provided that the calibrations occur in the appropriate half calendar year and are no less than one hundred twenty days apart.

(f) The following VAR supporting documentation must also be created and maintained:

(1) For all automated detergent blending facilities, documentation reflecting performance of the calibrations required by paragraph (e) of this section, and any associated adjustments of the automated detergent equipment;

(2) For all hand-blending facilities which are terminals, a record specifying, for each VAR period, the total volume in gallons of transfers from the facility of unadditized base gasoline;

(3) For all detergent blending facilities, product transfer documents for all gasoline, detergent and detergent-additized PRC transferred into or out of the facility; in addition, bills of lading, transfer, or sale for all unadditized PRC transferred into the facility;

(4) For all automated detergent blending facilities, documentation establishing the brands (if known) and grades of the gasoline which is the subject of the VAR formula record; and

(5) For all hand blending detergent blenders, the documentation, if in the party's possession, supporting the volumes of gasoline, PRC, and detergent reported on the VAR formula record.

(6) For all detergent blending facilities, documentation establishing the

curing of a batch or amount of misadditized gasoline or PRC, or the curing of a use restriction on the additized gasoline or PRC, and providing at least the following information: the date of the curing procedure; the problem that was corrected; the amount, name, and LAC of the original detergent used; the amount, name, and LAC of the added curing detergent; and the actual detergent concentration attained in, and the volume of, the total cured product.

(g) Document retention and availability. All detergent blenders shall retain the documents required under this section for a period of five years from the date the VAR formula records and supporting documentation are created, and shall deliver them upon request to the EPA Administrator or the Administrator's authorized representative.

(1) Except as provided in paragraph (g)(3) of this section, automated detergent blender facilities and hand-blender facilities which are terminals, which physically blend detergent into gasoline, must make immediately available to EPA, upon request, the preceding twelve months of VAR formula records plus the preceding two months of VAR supporting documentation.

(2) Except as provided in paragraph (g)(3) of this section, other hand-blending detergent facilities which physically blend detergent into gasoline must make immediately available to EPA, upon request, the preceding two months of VAR formula records and VAR supporting documentation.

(3) Facilities which have centrally maintained records at other locations, or have customers who maintain their own records at other locations for their proprietary detergent systems, and which can document this fact to the Agency, may have until the start of the next business day after the EPA request to supply VAR supporting documentation, or longer if approved by the Agency.

(4) In this paragraph (g) of this section, the term *immediately available* means that the records must be provided, electronically or otherwise, within approximately one hour of EPA's request, or within a longer time frame as approved by EPA.

[61 FR 35377, July 5, 1996]

§ 80.171 Product transfer documents (PTDs).

(a) *Contents.* For each occasion when any gasoline refiner, importer, reseller, distributor, carrier, retailer, wholesale purchaser-consumer, oxygenate blender, detergent manufacturer, distributor, carrier, or blender, transfers custody or title to any gasoline, detergent, or detergent-additized PRC other than when detergent-additized gasoline is sold or dispensed at a retail outlet or wholesale purchaser-consumer facility to the ultimate consumer, the transferor shall provide to the transferee, and the transferee shall acquire from the transferor, documents which accurately include the following information:

(1) The name and address of the transferee and transferor; the address requirement may be fulfilled, in the alternative, through separate documentation which establishes said addresses and is maintained by the parties and made available to EPA for the same length of time as required for the PTDs, provided that the normal business procedure of these parties is not to identify addresses on PTDs.

(2) The date of the transfer.

(3) The volume of product transferred.

(4)(i) The identity of the product being transferred (*i.e.*, its identity as base gasoline, detergent, detergent-additized gasoline, or specified detergent-additized oxygenate or detergent-additized gasoline blending stock that comprises a detergent-additized PRC). PTDs for detergent-additized gasoline or PRC are not required to identify the particular detergent used to additize the product.

(ii) If the product being transferred consists of two or more different types of product subject to this regulation, *i.e.*, base gasoline, detergent-additized gasoline, or specified detergent-additized PRC, component, then the PTD for the commingled product must identify each such type of component contained in the commingled product.

(5) If the product being transferred is base gasoline, then in addition to the base gasoline identification, the following warning must be stated on the PTD: ''Not for sale to the ultimate consumer''. If, pursuant to § 80.173(a), the

product being transferred is exempt base gasoline to be used for research, development, or test purposes only, the following warning must also be stated on the PTD: ''For use in research, development, and test programs only''.

(6) The name of the detergent additive as reported in its registration must be used to identify the detergent package on its PTD.

(7) If the product being transferred is leaded gasoline, then the PTD must disclose that the product contains lead and/or phosphorous, as applicable.

(8) If the product being transferred is gasoline or PRC that has been additized with detergent under a PADD-specific or CARB-based certification, or under a certification option which creates an oxygenate or PRC use restriction, then the PTD for the additized product must identify the applicable use restriction. The PTD for commingled additized gasolines or PRCs containing such restrictions must indicate the applicable restriction(s) from each component.

(9) If the product being transferred is detergent-additized gasoline or PRC that has been overadditized in anticipation of the later (or earlier) addition of PRC, then the PTD must include a statement that the product has been overadditized to account for a specified volume in gallons, or a specified percentage of the product's total volume, of additional, specified PRC.

(10) If a detergent package has been certified under only one certification option, and that option places a use restriction on the respective LAC, then the PTD must identify the detergent as use-restricted; the PTD for a detergent package certified with more than one LAC must identify that the detergent has special use options available.

(11) Base gasoline designated for fuel-specific certification.

(i) The PTD for segregated base gasoline intended for additization with a specific fuel-specific detergent pursuant to § 80.163(c) must indicate that it is for use with the designated, fuel-specific detergent.

(ii) A PTD for base gasoline may not indicate that the product is for use with a designated, fuel-specific detergent, unless the entire quantity of base gasoline is from the segregated fuel supply specified in the detergent's certification and the gasoline contains only those oxygenates or PRCs, if any, specified and approved in the detergent's certification.

(iii) If, pursuant to § 80.163(c)(3), the fuel-specific certification for the segregated pool of gasoline has established that no detergent additives are necessary for such gasoline to comply with this subpart, then the PTD must identify this gasoline as detergent-equivalent gasoline.

(b) *Use of product codes and other non-regulatory language.* (1) Product codes and other non-regulatory language may not be used as a substitute for the specified PTD warning language specified in paragraph (a)(6) of this section for base gasoline, except that:

(i) The specified warning language may be omitted for bulk transfers of base gasoline from a refinery to a pipeline if there is a prior written agreement between the parties specifying that all such gasoline is unadditized and will not be transferred to the ultimate consumer;

(ii) Product codes may be used as a substitute for the specified warning language provided that the PTD is an electronic data interchange (EDI) document being used solely for the transfer of title to the base gasoline, and provided that the product codes otherwise comply with the requirements of this section.

(2) Product codes and other non-regulatory language may not be used in place of the PTD language specified in paragraph (a)(11) of this section regarding detergent package use restrictions.

(3) Product codes and other language not specified in this section may otherwise be used to comply with PTD information requirements, provided that they are clear, accurate, and not misleading.

(4) If product codes are used, they must be standardized throughout the distribution system in which they are used, and downstream parties must be informed of their full meaning.

(c) *PTD exemption for small transfers of additized gasoline.* Transfers of additized gasoline are exempt from the PTD requirements of this section provided all the following conditions are satisfied:

(1) The product is being transferred by a distributor who is not the product's detergent blender; and

(2) The recipient is a wholesale purchaser-consumer (WPC) or other ultimate consumer of gasoline, for its own use only or for that of its agents or employees; and

(3) The volume of additized gasoline being transferred is no greater than 550 gallons.

(d) *Recordkeeping Period*. Any person creating, providing or acquiring product transfer documentation for gasoline, detergent, or detergent-additized PRC shall retain the documents required by this section for a period of five years from the date the product transfer documentation was created, received or transferred, as applicable, and shall deliver such documents to EPA upon request. WPCs are not required to retain PTDs of additized gasoline received by them.

[61 FR 35379, July 5, 1996, as amended at 62 FR 60001, Nov. 6, 1997]

§ 80.172 Penalties.

(a) *General*. Any person who violates any prohibition or affirmative requirement of § 80.168 shall be liable to the United States for a civil penalty of not more than the sum of $25,000 for every day of such violation and the amount of economic benefit or savings resulting from the violation.

(b) *Gasoline non-conformity*. Any violation of § 80.168(a) shall constitute a separate day of violation for each and every day the gasoline in violation remains at any place in the gasoline distribution system, beginning on the day that the gasoline is in violation of the respective prohibition and ending on the last day that such gasoline is offered for sale or is dispensed to any ultimate consumer.

(c) *Detergent non-conformity*. Any violation of § 80.168(d) shall constitute a separate day of violation for each and every day the detergent in violation remains at any place in the gasoline or detergent distribution system, beginning on the day that the detergent is in violation of the prohibition and ending on the last day that detergent-additized gasoline, containing the subject detergent as a component thereof, is offered for sale or is dispensed to any ultimate consumer.

(d) *Post-refinery component non-conformity*. Any violation of § 80.168(e) shall constitute a separate day of violation for each and every day the PRC in violation remains at any place in the PRC or gasoline distribution system, beginning on the day that the PRC is in violation of the respective prohibition and ending on the last day that detergent-additized gasoline containing the PRC is offered for sale or is dispensed to any ultimate consumer.

(e) *Product transfer document non-conformity*. Any violation of § 80.168(c) shall constitute a separate day of violation for every day the PTD is not fully in compliance. This is to begin on the day that the PTD is created or should have been created and to end at the later of the following dates:

(1) The day that the document is corrected and comes into compliance; or

(2) The day that gasoline not additized in conformity with detergent certification program requirements, as a result of the PTD non-conformity, is offered for sale or is dispensed to the ultimate consumer.

(f) *Volumetric additive reconciliation recordkeeping non-conformity*. Any VAR recordkeeping violation of § 80.168(b) shall constitute a separate day of violation for every day that VAR recordkeeping is not fully in compliance. Each element of the VAR record keeping program that is not in compliance shall constitute a separate violation for purposes of this section.

(g) *Volumetric additive reconciliation compliance standard non-conformity*. Any violation of the VAR compliance standard established in § 80.170 shall constitute a separate day of violation for each and every day of the VAR compliance period in which the standard was violated.

(h) *Volumetric additive reconciliation equipment calibration non-conformity*. Any VAR equipment calibration violation of § 80.168(b) shall constitute a separate day of violation for every day a VAR equipment calibration requirement is not met.

[61 FR 35380, July 5, 1996, as amended at 61 FR 58747, Nov. 18, 1996]

§ 80.173 Exemptions.

(a) *Research, development, and testing exemptions.* Any detergent that is either in a research, development, or test status, or is sold to petroleum, automobile, engine, or component manufacturers for research, development, or test purposes, or any gasoline to be used by, or under the control of, petroleum, additive, automobile, engine, or component manufacturers for research, development, or test purposes, is exempted from the provisions of the detergent certification program, provided that:

(1) The detergent (or fuel containing the detergent), or the gasoline, is kept segregated from non-exempt product, and the party possessing the product maintains documentation identifying the product as research, development, or testing detergent or fuel, as applicable, and stating that it is to be used only for research, development, or testing purposes; and

(2) The detergent (or fuel containing the detergent), or the gasoline, is not sold, dispensed, or transferred, or offered for sale, dispensing, or transfer, from a retail outlet. It shall also not be sold, dispensed, or transferred or offered for sale, dispensing, or transfer from a wholesale purchaser-consumer facility, unless such facility is associated with detergent, fuel, automotive, or engine research, development or testing; and

(3) The party using the product for research, development, or testing purposes, or the party sponsoring this usage, notifies the EPA, on at least an annual basis and prior to the use of the product, of the purpose(s) of the program(s) in which the product will be used and the anticipated volume of the product to be used. The information must be submitted to the address or fax number specified in § 80.174(c).

(b) *Racing fuel and aviation fuel exemptions.* Any fuel that is refined, sold, dispensed, transferred, or offered for sale, dispensing, or transfer as automotive racing fuel or as aircraft engine fuel, is exempted from the provisions of this subpart, provided that:

(1) The fuel is kept segregated from non-exempt fuel, and the party possessing the fuel for the purposes of refining, selling, dispensing, transferring, or offering for sale, dispensing, or transfer as automotive racing fuel or as aircraft engine fuel, maintains documentation identifying the product as racing fuel, restricted for non-highway use in racing motor vehicles, or as aviation fuel, restricted for use in aircraft, as applicable;

(2) Each pump stand at a regulated party's facility, from which such fuel is dispensed, is labeled with the applicable fuel identification and use restrictions described in paragraph (b)(1) of this section; and

(3) The fuel is not sold, dispensed, transferred, or offered for sale, dispensing, or transfer for highway use in a motor vehicle.

(c) *California gasoline exemptions.* (1) Gasoline or PRC which is additized in the State of California is exempt from the VAR provisions in §§ 80.168 (b) and (e) and 80.170, provided that:

(i) For all such gasoline or PRC, whether intended for sale within or outside of California, records of the type required for California gasoline (specified in title 13, California Code of Regulations, section 2257) are maintained; and

(ii) Such records, with the exception of daily additization records, are maintained for a period of five years from the date they were created and are delivered to EPA upon request.

(2) Gasoline or PRC that is transferred and/or sold solely within the State of California is exempt from the PTD provisions of the detergent certification program, specified in §§ 80.168(c) and 80.171.

(3) Nothing in this paragraph (c) exempts such gasoline or PRC from the requirements of § 80.168 (a) and (e), as applicable. EPA will base its determination of California gasoline's conformity with the detergent's LAC on the additization records required by CARB, or records of the same type.

[61 FR 35380, July 5, 1996]

§ 80.174 Addresses.

(a) The detergent additive sample required under § 80.161(b)(2) shall be sent to: Manager, Fuels and Technical Analysis Group, Testing Services Division,

U.S. Environmental Protection Agency, National Vehicle and Fuel Emissions Laboratory, 2565 Plymouth Road, Ann Arbor, Michigan 48105.

(b) Other detergent registration and certification data, and certain other information which may be specified in this subpart, shall be sent to: Detergent Additive Certification, Director, Fuels and Energy Division, U.S. Environmental Protection Agency (6406J), 1200 Pennsylvania Ave., NW., Washington, DC 20460.

(c) Notifications to EPA regarding program exemptions, detergent dilution and commingling, and certain other information which may be specified in this subpart, shall be sent to: Detergent Enforcement Program, U.S. Environmental Protection Agency, Suite 214, 12345 West Alameda Parkway, Denver, CO 80228, (FAX 303–969–6490).

[61 FR 35381, July 5, 1996]

Subpart H—Gasoline Sulfur

SOURCE: 65 FR 6823, Feb. 10, 2000, unless otherwise noted.

GENERAL INFORMATION

§§ 80.180–80.185 [Reserved]

§ 80.190 Who must register with EPA under the sulfur program?

(a) Refiners and importers who are registered by EPA under § 80.76 are deemed to be registered for purposes of this subpart.

(b) Refiners and importers subject to the standards in § 80.195 who are not registered by EPA under § 80.76 must provide to EPA the information required by § 80.76 by November 1, 2003, or not later than three months in advance of the first date that such person produces or imports gasoline, whichever is later.

(c) Refiners with any refinery subject to the small refiner standards under § 80.240, or refiners subject to the geographic phase-in area (GPA) standards under § 80.216, who are not registered by EPA under § 80.76 must provide to EPA the information required under § 80.76 by December 31, 2000.

(d) Any refiner who plans to generate credits or allotments under § 80.305 or § 80.275 in any year prior to 2004 who is not registered by EPA under § 80.76 must register under § 80.76 no later than September 30 of the year prior to the first year of credit generation. Any refiner who plans to generate credits in 2000 who is not registered by EPA under § 80.76 must register under § 80.76 no later than May 10, 2000.

GASOLINE SULFUR STANDARDS

§ 80.195 What are the gasoline sulfur standards for refiners and importers?

(a)(1) The gasoline sulfur standards for refiners and importers, excluding gasoline produced by small refiners subject to the standards at § 80.240, and gasoline designated as GPA gasoline under § 80.219(a), are as follows:

	Gasoline sulfur standards for the averaging period beginning:		
	January 1, 2004	January 1, 2005	January 1, 2006 and subsequent
Refinery or Importer Average	[1]	30.00	30.00
Corporate Pool Average	120.00	90.00	[1]
Per-Gallon Cap	300	300	80

[1] Not applicable.

(2) The sulfur standards and all compliance calculations for sulfur under this subpart are in parts per million (ppm) and volumes are in gallons.

(3) The averaging period is January 1 through December 31 of each year.

(4) The standards under this paragraph (a) for all imported gasoline shall be met by the importer.

(b)(1) The refinery or importer annual average gasoline sulfur standard is the maximum average sulfur level allowed for gasoline produced at a refinery or imported by an importer during each calendar year starting January 1, 2005.

(2) The annual average sulfur level is calculated in accordance with § 80.205.

(3) The refinery or importer annual average gasoline sulfur standard may be met using credits as provided under § 80.275 or § 80.315.

(4) In 2005 only, the refinery or importer annual average sulfur standard may be met using allotments or credits as provided under § 80.275, or credits as

provided under § 80.315. The same allotments used to demonstrate compliance with the corporate pool average standard may be used by a refinery in the corporate pool toward a demonstration of compliance with the refinery average standard, or by an importer for demonstration of compliance with the importer average standard. Alternatively, some of the allotments may be used toward a demonstration of compliance with the refinery average standard by one refinery in the corporate pool and the remainder used by another refinery or refineries in the corporate pool.

(c)(1) The corporate pool average gasoline sulfur standards applicable in 2004 and 2005 are the maximum average sulfur levels allowed for a refiner's or importer's gasoline production from all of the refiner's refineries or all gasoline imported by an importer in a calendar year. The corporate pool average standards for a party that is both a refiner and an importer are the maximum average sulfur levels allowed for all the party's combined gasoline production from all refineries and imported gasoline in a calendar year.

(2) The corporate pool average is calculated in accordance with the provisions of § 80.205.

(3) The corporate pool average standard may be met using sulfur allotments under § 80.275.

(4) The corporate pool average standards do not apply to approved small refiners subject to the gasoline sulfur standards under § 80.240.

(5)(i) Joint ventures, in which two or more parties collectively own and operate one or more refineries, will be treated as a separate refiner under this section.

(ii) One partner to a joint venture may include one or more joint venture refineries in its corporate pool for purposes of complying with the corporate pool average standards. The joint venture will be in compliance for such joint venture refinery(ies) if the partner's corporate pool average meets the corporate pool average standards. The joint venture entity must demonstrate compliance with the corporate pool average standards for any refinery(ies) owned by the joint venture that are not included in one partner's corporate pool.

(iii) In the case of a refinery that is owned by a two or more parties that is not a joint venture under this paragraph (c)(5), the business entity consisting of the joint owners is the refiner of that refinery. One of the owners of such a refinery may include the refinery in its corporate pool for purposes of complying with the corporate pool average standards under this section, with the same requirements and limitations that apply under paragraph (c)(5)(ii) of this section.

(6)(i) A parent company is the refiner of any refinery facilities owned by the parent company's wholly-owned subsidiaries for purposes of compliance with the corporate pool average standards under this section.

(ii) A parent company must include in its corporate pool all of the gasoline produced at any refineries owned by the parent company and any refineries owned by the parent company's wholly-owned subsidiaries; or

(iii) A parent company may be deemed in compliance with the corporate pool average standards if the parent company includes in its corporate pool the gasoline produced by any refineries owned by the parent company, and each wholly-owned subsidiary of the parent company individually complies with the corporate pool average standards for the gasoline produced at the refineries owned by the wholly-owned subsidiary.

(d)(1) The per-gallon cap standard is the maximum sulfur level allowed for each batch of gasoline produced or imported starting January 1, 2004.

(2) In 2004 only, a refiner or importer may produce or import gasoline with a per-gallon sulfur content greater than 300 ppm, to a maximum of 350 ppm, provided the following conditions are met:

(i) The refinery or importer becomes subject to an adjusted per-gallon cap standard in 2005, calculated using the following formula:

$$ACS = 300 - (S_{max} - 300)$$

Where:

ACS=Adjusted cap standard.

S_{max}=Maximum sulfur content of any gasoline produced at a refinery or imported by an importer during 2004.

(ii) The adjusted cap standard calculated under paragraph (d)(2)(i) of this section applies to all gasoline produced at a refinery or imported by an importer during 2005.

(iii) The refinery or importer remains subject to the 30.00 average standard under paragraph (a) of this section for 2005.

(iv) The provisions of this paragraph (d)(2) apply to gasoline designated as GPA gasoline under § 80.219(a).

(v) The provisions of this paragraph (d)(2) do not apply to small refiners as defined in § 80.225.

[65 FR 6823, Feb. 10, 2000; 65 FR 10598, Feb. 28, 2000, as amended at 67 FR 40181, June 12, 2002]

§ 80.200 What gasoline is subject to the sulfur standards and requirements?

For the purpose of this subpart, all reformulated and conventional gasoline and RBOB, collectively called ''gasoline'' unless otherwise specified, is subject to the standards and requirements under this subpart, with the following exceptions:

(a) Gasoline that is used to fuel aircraft, racing vehicles or racing boats that are used only in sanctioned racing events, provided that:

(1) Product transfer documents associated with such gasoline, and any pump stand from which such gasoline is dispensed, identify the gasoline either as gasoline that is restricted for use in aircraft, or as gasoline that is restricted for use in racing motor vehicles or racing boats that are used only in sanctioned racing events;

(2) The gasoline is completely segregated from all other gasoline throughout production, distribution and sale to the ultimate consumer; and

(3) The gasoline is not made available for use as motor vehicle gasoline, or dispensed for use in motor vehicles, except for motor vehicles used only in sanctioned racing events.

(b) California gasoline as defined in § 80.375.

(c) Gasoline that is exported for sale outside the U.S.

§ 80.205 How is the annual refinery or importer average and corporate pool average sulfur level determined?

(a) The annual refinery or importer average and corporate pool average gasoline sulfur level is calculated as follows:

$$S_a = \frac{\sum_{i=1}^{n} (V_i \times S_i)}{\sum_{i=1}^{n} V_i}$$

Where:

S_a = The refinery or importer annual average sulfur level, or corporate pool average level, as applicable.

V_i=The volume of gasoline produced or imported in batch i.

S_i=The sulfur content of batch i determined under § 80.330.

n=The number of batches of gasoline produced or imported during the averaging period.

i=Individual batch of gasoline produced or imported during the averaging period.

(b) All annual refinery or importer average or corporate pool average calculations shall be conducted to two decimal places.

(c) A refiner or importer may include oxygenate added downstream from the refinery or import facility when calculating the sulfur content, provided the following requirements are met:

(1) For oxygenate added to conventional gasoline, the refiner or importer must comply with the requirements of § 80.101(d)(4)(ii).

(2) For oxygenate added to RBOB, the refiner or importer must comply with the requirements of § 80.69(a).

(d) Refiners and importers must exclude from compliance calculations all of the following:

(1) Gasoline that was not produced at the refinery;

(2) In the case of an importer, gasoline that was imported as Certified Sulfur-FRGAS;

(3) Blending stocks transferred to others;

(4) Gasoline that has been included in the compliance calculations for another refinery or importer; and

(5) Gasoline exempted from standards under § 80.200.

(e)(1) A refiner or importer may exceed the refinery or importer annual average sulfur standard specified in § 80.195 for a given averaging period for any calendar year through 2010, creating a compliance deficit, provided that in the calendar year following the year the standard is not met, the refinery or importer shall:

(i) Achieve compliance with the refinery or importer annual average sulfur standard specified in § 80.195; and

(ii) Use additional sulfur credits sufficient to offset the compliance deficit of the previous year.

(2) No refiner or importer may have a compliance deficit in any year after 2010. Any deficit that exists in 2010 must be made up in 2011.

[65 FR 6823, Feb. 10, 2000, as amended at 67 FR 40182, June 12, 2002]

§ 80.210 What sulfur standards apply to gasoline downstream from refineries and importers?

The sulfur standard for gasoline at any point in the gasoline distribution system downstream from refineries and import facilities, including gasoline at facilities of distributors, carriers, oxygenate blenders, retailers and wholesale purchaser-consumers (''downstream location''), shall be determined in accordance with the provisions of this section.

(a) *Definition. S-RGAS* means gasoline that is subject to the standards under § 80.240 or § 80.270, including Certified Sulfur-FRGAS as defined in § 80.410, except that no batch of gasoline may be classified as S-RGAS if the actual sulfur content is less than the applicable per-gallon refinery cap standard specified in § 80.195.

(b) *Standards for gasoline that does not qualify for S-RGAS downstream standards.* The following standards apply to any gasoline that does not qualify for S-RGAS downstream standards under in paragraph (d) of this section:

(1) Starting February 1, 2004 the sulfur content of gasoline at any downstream location other than at a retail outlet or wholesale purchaser-consumer facility, and starting March 1, 2004 the sulfur content of gasoline at any downstream location, shall not exceed 378 ppm.

(2) Except as provided in § 80.220(a), starting February 1, 2005 the sulfur content of gasoline at any downstream location other than at a retail outlet or wholesale purchaser-consumer facility, and starting March 1, 2005 the sulfur content of gasoline at any downstream location, shall not exceed 326 ppm.

(3) Except as provided in § 80.220(a), starting February 1, 2006 the sulfur content of gasoline at any downstream location other than at a retail outlet or wholesale purchaser-consumer facility, and starting March 1, 2006 the sulfur content of gasoline at any downstream location, shall not exceed 95 ppm.

(c) *Standards for gasoline that qualifies for S-RGAS downstream standards.* In the case of any gasoline that qualifies for S-RGAS downstream standards under paragraph (d) of this section, the sulfur standard shall be the downstream standard for the gasoline calculated under paragraph (f) of this section. In the case of mixtures of gasoline that qualify for different S-RGAS downstream standards, the sulfur standard shall be the highest downstream standard applicable to any of the S-RGAS in the mixture.

(d) *Gasoline that qualifies for S-RGAS downstream standards.* Gasoline qualifies for S-RGAS downstream standards if all of the following conditions are met:

(1) The gasoline must be comprised in whole or part of S-RGAS.

(2) Product transfer documents applicable to the gasoline when received at that location must represent that the gasoline contains S-RGAS.

(3) Except as provided in paragraph (d)(4) of this section, the gasoline must have been sampled and tested at that location subsequent to the most recent receipt of gasoline at that location, and the test result must show a sulfur content greater than:

(i) 350 ppm starting February 1, 2004;

(ii) 300 ppm starting February 1, 2005; and

(iii) 80 ppm (or in the GPA, 300 ppm) starting February 1, 2006.

(4) This sampling and testing condition does not apply for gasoline at any

retail outlet, wholesale purchaser-consumer facility, or contained in any transport truck.

(e) *Product transfer document information for S-RGAS.* (1) On each occasion when any refiner or importer of S-RGAS transfers custody or title to such gasoline, the refiner or importer shall provide to the transferee documents that include the following information:

(i) Identification of the gasoline as being S-RGAS; and

(ii) The downstream standard applicable to the batch of gasoline under paragraph (f) of this section.

(2) Where gasoline in whole or part is classified as S-RGAS when received by the transferor, and where the gasoline transferred meets the conditions under paragraph (d) of this section, the transferor shall provide to the transferee, on each occasion when custody or title to gasoline is transferred, documents that include the following information:

(i) Identification of the gasoline as S-RGAS; and

(ii) The applicable downstream standard under paragraph (c) of this section. This does not apply when gasoline is sold or dispensed for use in motor vehicles at a retail outlet or wholesale purchaser-consumer facility.

(3) No person shall classify gasoline as being S-RGAS except as provided in paragraphs (e)(1) and (e)(2) of this section.

(4) Product codes may be used to convey the information required by paragraphs (e)(1) and (e)(2) of this section if such codes are clearly understood by each transferee.

(5) Gasoline from a terminal tank containing S-RGAS that is combined with gasoline from a terminal tank containing non-S-RGAS for the purpose of blending mid-grade gasoline in a transport truck may be classified on product transfer documents as S-RGAS, provided that the S-RGAS was combined with non-S-RGAS for the sole purpose of producing midgrade gasoline.

(6) Where S-RGAS is being delivered into a terminal storage tank containing non-S-RGAS which is simultaneously supplying gasoline to a transport truck, the terminal may identify the gasoline as S-RGAS before the delivery into the terminal tank is complete without performing the tests required in paragraph (d)(3) of this section. Upon completion of the delivery of S-RGAS into the terminal tank, the terminal may classify the gasoline as S-RGAS only if it meets the criteria for S-RGAS following testing in accordance with the requirements of paragraph (d)(3) of this section.

(7) The information relating to S-RGAS required to be included in product transfer documentation under this paragraph (e) must be included in the product transfer documents which accompany the transfer of custody of the gasoline. Product transfer documents that transfer title of the gasoline may fulfill the requirements under this paragraph (e) by indicating that the required information relating to S-RGAS is contained in the product transfer documents which accompany the transfer of custody of the gasoline.

(f) *Downstream standards applicable to S-RGAS when produced or imported.* (1) The downstream standard applicable to any gasoline classified as S-RGAS when produced or imported shall be calculated using the following equation:

$$D=S+105\times((S+2)/10^4)^{0.4}$$

Where:

D=Downstream sulfur standard.

S=The sulfur content of the refiner's batch determined under § 80.330.

(2) Where more than one S-RGAS batch is combined, prior to shipment, at the refinery or import facility where the S-RGAS is produced or imported, the downstream standard applicable to the mixture shall be the highest downstream standard, calculated under paragraph (f)(1) of this section, for any S-RGAS contained in the mixture.

[65 FR 6823, Feb. 10, 2000, as amended at 67 FR 40182, June 12, 2002]

§ 80.211 What are the requirements for treating imported gasoline as blendstock?

An importer may treat imported gasoline (as defined in § 80.2(c)) as gasoline treated as blendstock, or GTAB, under the provisions of § 80.83 for purposes of compliance with this subpart H.

[70 FR 74578, Dec. 15, 2005]

§ 80.212 What requirements apply to oxygenate blenders?

Effective January 1, 2004, oxygenate blenders who blend oxygenate into gasoline downstream of the refinery that produced the gasoline or the import facility where the gasoline was imported, are not subject to the requirements of this subpart applicable to refiners for this gasoline, but are subject to the requirements and prohibitions applicable to downstream parties and the prohibition specified in § 80.385(e).

§ 80.213 What alternative sulfur standards and requirements apply to transmix processors and transmix blenders?

Transmix processors and transmix blenders, as defined in § 80.84(a), may comply with the following requirements instead of the requirements and standards otherwise applicable to a refiner under subpart H of this part.

(a) Any transmix processor who recovers transmix gasoline product (TGP), as defined in § 80.84(a), from transmix through transmix processing under § 80.84(c) must show through sampling and testing, using the methods in § 80.330, that the TGP meets the applicable sulfur standards under § 80.210 or § 80.220, prior to the TGP leaving the transmix processing facility.

(1) The applicable sulfur standard is the standard in § 80.210(b); or

(2) If the TGP sulfur is greater than the standard in § 80.210(b), and the transmix processor has product transfer documents that prove the TGP was originally produced by a small refiner, hardship refiner, or for use in the GPA, the applicable sulfur standard for the TGP is the downstream sulfur standard corresponding to the original gasoline.

(b) The sampling and testing required under paragraph (a) of this section shall be conducted following each occasion TGP is produced.

(c) Any transmix processor who produces gasoline by adding blendstock to TGP must, for such blendstock, comply with all requirements and standards that apply to a refiner under subpart H of this part, and must meet the applicable downstream sulfur standards under § 80.210 or § 80.220 for the gasoline produced by blending blendstock and TGP, prior to the gasoline leaving the transmix processing facility.

(d) Any transmix processor who produces gasoline by blending blendstock into TGP may meet the sampling and testing requirements of subpart H of this part as follows:

(1)(i) Sample and test the blendstock when received at the transmix processing facility, using the methods specified in § 80.330, to determine the volume and sulfur content, and treat each volume of blendstock that is blended into a volume of TGP as a separate batch for purposes of calculating and reporting compliance with the applicable annual average and per-gallon cap sulfur standards in § 80.195 or § 80.216, as applicable; or

(ii) Use sulfur test results of the blendstock supplier provided that the following requirements are met:

(A) Sampling and testing by the blendstock supplier is performed using the methods specified in § 80.330;

(B) Testing for the sulfur content of the blendstock in the supplier's storage tank must be conducted subsequent to the last receipt of blendstock into the supplier's storage tank from which the transmix processor is supplied;

(C) The transmix processor must obtain a copy of the blendstock supplier's test results, at the time of each transfer of blendstock to the transmix processor, that reflect the sulfur content of each load of blendstock supplied to the transmix processor;

(D) The transmix processor must conduct a quality assurance program of sampling and testing for each blendstock supplier. The frequency of blendstock sampling and testing must be one sample for every 500,000 gallons of blendstock received or one sample every 3 months, whichever results in more frequent sampling; and

(E) If any of the requirements of this paragraph (d)(1)(ii) are not met, in whole or in part, for any blendstock blended into TGP, that blendstock is deemed in violation of the gasoline sulfur standards in § 80.195.

(2) Sample and test each batch of gasoline produced by blending blendstock into TGP, using the methods specified in § 80.330, to determine the sulfur content of the batch.

(3) The sulfur content of each batch of gasoline produced by blending blendstock into TGP must be no greater than the downstream sulfur standard under § 80.210 or § 80.220 applicable to the designation of the TGP; and

(4) Gasoline produced by blending blendstock into TGP must be properly identified on product transfer documents in accordance with the provisions of § 80.210 or § 80.220, as applicable.

(e) Any transmix blender who produces gasoline by blending transmix, or mixtures of gasoline and distillate fuel described in § 80.84(e), into previously certified gasoline under § 80.84(d) must meet the applicable downstream sulfur standards under § 80.210 or § 80.220 for the gasoline produced by blending transmix and previously certified gasoline.

(f) Any transmix processor or transmix blender who adds feedstocks to their transmix other than gasoline, distillate fuel, or gasoline blendstocks from pipeline interface must meet all requirements and standards that apply to a refiner under subpart H of this part, other than § 80.213, for all gasoline they produce during a compliance period.

[71 FR 31963, June 2, 2006]

§ 80.214 [Reserved]

GEOGRAPHIC PHASE-IN PROGRAM

§ 80.215 What is the scope of the geographic phase-in program?

(a) *Geographic phase-in area.* (1) The following states comprise the geographic phase-in area (GPA) subject to the provisions of the geographic phase-in program: North Dakota, Montana, Idaho, Wyoming, Utah, Colorado, New Mexico, and Alaska.

(2) In addition, the following counties within the states identified in paragraph (a)(2)(i) of this section and the following Federal Indian reservations in paragraph (a)(2)(ii) of this section are included in the GPA:

(i) The list of counties follows:

Arizona

Apache	Greenlee
Coconino	Navajo
Gila	

Nebraska

Banner	Keith
Box Butte	Kimball
Cheyenne	Morrill
Dawes	Scotts Bluff
Deuel	Sheridan
Garden	Sioux

Nevada

Elko	Lander
Eureka	Lincoln
Humboldt	White Pine

Oregon

Baker	Morrow
Crook	Sherman
Gilliam	Umatilla
Grant	Union
Harney	Wallowa
Malheur	Wheeler

South Dakota

Bennett	Lawrence
Butte	Meade
Corson	Mellette
Custer	Pennington
Dewey	Perkins
Fall River	Shannon
Haakon	Stanley
Harding	Todd
Jackson	Ziebach
Jones	

Washington

Adams	Kittitas
Asotin	Klickitat
Benton	Lincoln
Chelan	Okanogan
Columbia	Pend Oreille
Douglas	Spokane
Ferry	Stevens
Franklin	Walla Walla
Garfield	Whitman
Grant	Yakima

(ii) The list of Federal Indian reservations follows: Burns Paiute, Cheyenne River, Colville, Duck Valley, Ely Colony, Fort Apache, Fort McDermitt, Goshute, Haulapai, Havasupai, Hopi, Kalispel, Navajo, Pine Ridge, Rosebud, Yakama, San Carlos, Spokane, Standing Rock, Summit Lake, Te-Moak, Umatilla, Winnemucca.

(3) Contiguous tribal reservations of a particular tribe are included in the GPA if a portion of the tribal reservation is within the GPA state or county.

(4) Any dispensing facility located partially within a GPA county or tribal reservation land shall be considered fully within the GPA for purposes of this program.

(b) *Duration of the program.* (1) The geographic phase-in program applies to the 2004, 2005, and 2006 annual averaging periods, except as provided in paragraph (b)(2) of this section.

(2) Subject to the provisions of § 80.540, the geographic phase-in program shall also apply to the 2007 and 2008 annual averaging period for refiners approved for GPA standards in 2007 and 2008 under § 80.540.

(c) *Persons eligible.* Any refiner or importer who produces or imports gasoline for use in the geographic area under paragraph (a) of this section is eligible to apply for the geographic phase-in program. The provisions of the geographic phase-in program shall apply to imported gasoline through the importer.

[65 FR 6823, Feb. 10, 2000, as amended at 66 FR 5136, Jan. 18, 2001; 66 FR 19306, Apr. 13, 2001; 70 FR 70509, Nov. 22, 2005]

§ 80.216 What standards apply to gasoline produced or imported for use in the GPA?

(a) The refinery or importer annual average sulfur standard for gasoline produced or imported for use in the geographic phase-in area under § 80.215, and designated as GPA gasoline under § 80.219(a), shall be 150.00 ppm.

(b) The per-gallon cap standard for gasoline produced or imported for use in the GPA under paragraph (a) of this section shall be 300 ppm, except as specified in § 80.195(d).

(c) The refinery or importer annual average sulfur level is calculated in accordance with the provisions of § 80.205.

(d) The refinery or importer annual average standard under paragraph (a) of this section may be met using sulfur allotments or credits as provided under §§ 80.275 and 80.315.

(e) Gasoline produced by approved small refiners subject to the standards under § 80.240 is not subject to the standards under paragraphs (a) and (b) of this section.

(f)(1) A refiner or importer whose gasoline production or volume of imported gasoline in 2004 or 2005 is comprised of more than 50 percent of gasoline designated as GPA gasoline under § 80.219(a) shall not be required to meet the corporate pool average standards under § 80.195 for its gasoline production or imported gasoline during the applicable averaging period.

(2) A refiner or importer whose gasoline production or volume of imported gasoline in 2004 or 2005 is comprised of less than 50 percent of gasoline designated as GPA gasoline under § 80.219(a) must meet the corporate pool average standards under § 80.195 for all the refiner's gasoline production or the importer's volume of imported gasoline, including GPA gasoline, during the applicable averaging period.

(g) The provisions for compliance deficits under § 80.205(e) do not apply to gasoline subject to the standards under paragraphs (a) and (b) of this section.

[65 FR 6823, Feb. 10, 2000, as amended at 66 FR 19306, Apr. 13, 2001; 67 FR 40182, June 12, 2002]

§ 80.217 How does a refiner or importer apply for the GPA standards?

(a) To apply for the GPA standards under § 80.216, a refiner or importer must submit an application in accordance with the provisions of § 80.290.

(b) Applications under paragraph (a) of this section must be submitted by May 1, 2001.

(c)(1) If approved, EPA will notify the refiner or importer of each refinery's or the importer's annual average sulfur standard for gasoline produced for use in the GPA for the 2004 through 2006 annual averaging periods.

(2) If disapproved, the refiner or importer must comply with the standards in § 80.195 for gasoline produced for use in the GPA.

(d) If EPA finds that a refiner or importer provided false or inaccurate information on its application under this section, upon notice from EPA, the refiner's or importer's application will be void *ab initio*.

[65 FR 6823, Feb. 10, 2000, as amended at 66 FR 19306, Apr. 13, 2001]

§ 80.218 [Reserved]

§ 80.219 Designation and downstream requirements for GPA gasoline.

The requirements and prohibitions specified in this section apply during the period January 1, 2004 through December 31, 2006.

(a) *Designation.* Any refiner or importer shall designate any gasoline produced or imported that is subject to the standards under § 80.216 as ''GPA'' gasoline.

(b) *Product transfer documents.* (1) On each occasion that any person transfers custody or title to gasoline designated as GPA gasoline, other than when gasoline is sold or dispensed for use in motor vehicles at a retail outlet or wholesale purchaser-consumer facility, the transferor shall provide to the transferee documents that include the following information:

(i) Identification of the gasoline as being GPA gasoline;

(ii) A statement that the gasoline may not be distributed or sold for use outside the geographic phase-in area.

(2) Except for transfers to truck carriers, retailers and wholesale purchaser-consumers, product codes may be used to convey the information required by paragraph (b)(1) of this section if such codes are clearly understood by each transferee.

(3) The requirements under paragraph (b)(1) of this section are in addition to the requirement under § 80.210(e), where appropriate, to identify gasoline as being S-RGAS.

(c) *GPA gasoline use prohibitions.* (1) All parties in the distribution system, including refiners, importers, distributors, carriers, oxygenate blenders, retailers and wholesale purchaser-consumers, are prohibited from:

(i) Selling, offering for sale, dispensing, distributing, storing or transporting GPA gasoline for use outside the geographic phase-in area; and

(ii) Commingling GPA gasoline with gasoline not designated as GPA gasoline unless the mixture is classified as GPA gasoline.

(2) Gasoline not designated as GPA gasoline may be distributed or sold for use in the geographic phase-in area.

§ 80.220 What are the downstream standards for GPA gasoline?

(a) *GPA gasoline.* (1) During the period February 1, 2004 through January 31, 2005, the sulfur content of GPA gasoline at any downstream location other than at a retail outlet or wholesale purchaser-consumer facility, and during the period March 1, 2004 through February 28, 2005, the sulfur content of GPA gasoline at any downstream location shall not exceed 378 ppm.

(2) During the period February 1, 2005 through January 31, 2007, the sulfur content of GPA gasoline at any downstream location other than at a retail outlet or wholesale purchaser-consumer facility, and during the period March 1, 2005 through February 28, 2007, the sulfur content of GPA gasoline at any downstream location shall not exceed 326 ppm.

(b) *GPA gasoline mixed with S-RGAS.* Notwithstanding the requirements in paragraph (a) of this section, the sulfur standard applicable to a mixture of GPA gasoline and S-RGAS gasoline at a downstream location shall be the greater of the standard under paragraph (a) of this section or the standard determined under § 80.210.

(c) Notwithstanding paragraph (a) of this section, the sulfur content standard of 326 ppm at any downstream location may be extended as provided under § 80.540(m).

[65 FR 6823, Feb. 10, 2000, as amended at 66 FR 5136, Jan. 18, 2001]

HARDSHIP PROVISIONS

§ 80.225 What is the definition of a small refiner?

(a) A *small refiner* is defined as any person, as defined by 42 U.S.C. 7602(e), who: (1)(i) Produces gasoline at a refinery by processing crude oil through refinery processing units;

(ii) Employed an average of no more than 1,500 people, based on the average number of employees for all pay periods from January 1, 1998, to January 1, 1999; and

(iii) Had an average crude capacity less than or equal to 155,000 barrels per calendar day (bpcd) for 1998.

(2) For the purpose of determining the number of employees and crude capacity under paragraph (a)(1) of this section, the refiner shall include the employees and crude capacity of any subsidiary companies, any parent company and subsidiaries of the parent company, and any joint venture partners. A subsidiary under this paragraph means any subsidiary in which the refiner or parent company has a 50% or greater ownership interest.

(b) The definition under paragraph (a) of this section applies to domestic and foreign refiners. For any refiner owned by a governmental entity, the number of employees as specified in paragraph (a) of this section shall include all employees of the governmental entity.

(c) If, without merger with, or acquisition of, another business unit, a company with approved small refiner status under § 80.235 exceeds 1,500 employees, or a corporate crude capacity of 155,000 bpcd after January 1, 1999, it will be considered a small refiner for the duration of the small refiner program.

(d) Notwithstanding the definition in paragraph (a) of this section, refiners who acquire a refinery after January 1, 1999, or reactivate a refinery that was shutdown or was non-operational between January 1, 1998, and January 1, 1999, may apply for small refiner status in accordance with the provisions of § 80.235.

[65 FR 6823, Feb. 10, 2000, as amended at 66 FR 19306, Apr. 13, 2001; 67 FR 38340, June 3, 2002; 67 FR 40182, June 12, 2002]

§ 80.230 Who is not eligible for the hardship provisions for small refiners?

(a) The following are not eligible for the hardship provisions for small refiners:

(1) Refiners with refineries built after January 1, 1999;

(2) Refiners who exceed the employee or crude oil capacity criteria under § 80.225(a) on January 1, 1999, but who meet these criteria after that date, regardless of whether the reduction in employees or crude capacity is due to operational changes at the refinery or a company sale or reorganization;

(3) Importers; and

(4) Refiners who produce gasoline other than by processing crude oil through refinery processing units.

(b)(1)(i) Refiners who qualify as small under § 80.225 and subsequently cease production of diesel fuel from processing crude oil through refinery processing units, or employ more than 1,500 people or exceed the 155,000 bpcd crude oil capacity limit after January 1, 2004 as a result of merger with or acquisition of or by another entity, are disqualified as small refiners, except this shall not apply in the case of a merger between two previously approved small refiners. If disqualification occurs, the refiner shall notify EPA in writing no later than 20 days following this disqualifying event.

(ii) Except as provided under paragraph (b)(1)(iii) of this section, any refiner whose status changes under this paragraph shall meet the applicable standards of § 80.195 within a period of up to 30 months of the disqualifying event for any of its refineries that were previously subject to the small refiner standards of § 80.240(a). However, such period shall not extend beyond December 31, 2007, or, for refineries for which the Administrator has approved an extension of the small refiner gasoline sulfur standards under § 80.553(c), December 31, 2010.

(iii) A refiner may apply to EPA for an additional six months to comply with the standards of § 80.195 if more than 30 months will be required for the necessary engineering, permitting, construction, and start-up work to be completed. Such applications must include detailed technical information supporting the need for additional time. EPA will base its decision to approve additional time on the information provided by the refiner and on other relevant information. In no case will EPA extend the compliance date beyond December 31, 2007, or, for refineries for which the Administrator has approved an extension of the small refiner gasoline sulfur standards under § 80.553(c), December 31, 2010.

(iv) During the period of time up to 30 months provided under paragraph (b)(1)(ii) of this section, and any extension provided under paragraph (b)(1)(iii) of this section, the refiner may not generate gasoline sulfur credits under § 80.310.

(2) Any refiner who qualifies as a small refiner under § 80.225 may elect to meet the standards under § 80.195 by notifying EPA in writing no later than November 15 prior to the year that the change will occur. Any refiner whose status changes under this paragraph (b)(2) shall meet the standards under

§ 80.195 beginning with the first averaging period subsequent to the status change.

[65 FR 6823, Feb. 10, 2000, as amended at 66 FR 19307, Apr. 13, 2001; 69 FR 39167, June 29, 2004]

§ 80.235 How does a refiner obtain approval as a small refiner?

(a) Applications for small refiner status must be submitted to EPA by December 31, 2000, except for applications submitted pursuant to § 80.225(d), which must be submitted by June 1, 2002.

(b) Applications for small refiner status must be sent to: U.S. EPA, Attn: Sulfur Program (6406J), 1200 Pennsylvania Ave., NW., Washington, DC 20460. For commercial delivery: U.S. EPA, Attn: Sulfur Program (6406J), 501 3rd Street, NW, Washington, DC 20001.

(c) The small refiner status application must contain the following information for the company seeking small refiner status, plus any subsidiary companies, any parent company and subsidiaries of the parent company, and any joint venture partners:

(1)(i) A listing of the name and address of each location where any employee worked during the 12 months preceding January 1, 1999; the average number of employees at each location based upon the number of employees for each pay period for the 12 months preceding January 1, 1999; and the type of business activities carried out at each location; or

(ii) In the case of a refiner who acquires a refinery after January 1, 1999, or reactivates a refinery that was shutdown between January 1, 1998, and January 1, 1999, a listing of the name and address of each location where any employee of the refiner worked since the refiner acquired or reactivated the refinery; the average number of employees at any such acquired or reactivated refinery during each calendar year since the refiner acquired or reactivated the refinery; and the type of business activities carried out at each location.

(2) The total corporate crude oil capacity of each refinery as reported to the Energy Information Administration (EIA) of the U.S. Department of Energy (DOE), or, in the case of a foreign refiner, a comparable reputable source, such as a professional publication or trade journal. The information submitted to EIA or the comparable reputable source is presumed to be correct. In cases where a company, domestic or foreign, disagrees with this information, the company may petition EPA with appropriate data to correct the record within 60 days after the company submits its application for small refiner status.

(3) A letter signed by the president, chief operating or chief executive officer of the company, or his/her designee, stating that the information contained in the application is true to the best of his/her knowledge.

(4) Name, address, phone number, facsimile number and E-mail address (if available) of a corporate contact person.

(d) For joint ventures, the total number of employees includes the combined employee count of all corporate entities in the venture.

(e) For government-owned refiners, the total employee count includes all government employees.

(f) Approval of small refiner status for refiners who apply under § 80.225(d) will be based on all information submitted under paragraph (c) of this section. The information submitted must show that the refiner employed an average of no more than 1500 people and had an average crude oil capacity less than or equal to 155,000 bpcd. Where appropriate, the employee and crude oil capacity criteria for such refiners will be based on the most recent 12 months of operation.

(g) EPA will notify a refiner of approval or disapproval of small refiner status by letter.

(1) If approved, EPA will notify the refiner of each refinery's applicable annual average sulfur standard, baseline volume, and per-gallon cap standard under § 80.240 for the 2004–2007 averaging periods.

(2) If disapproved, the refiner must comply with the standards in § 80.195.

(h) If EPA finds that a refiner provided false or inaccurate information on its application for small refiner status, upon notice from EPA the refiner's small refiner status will be void ab initio.

(i) Upon notification to EPA, an approved small refiner may withdraw its status as a small refiner. Effective on January 1 of the year following such notification, the small refiner will become subject to the standards at § 80.195.

[65 FR 6823, Feb. 10, 2000, as amended at 66 FR 19307, Apr. 13, 2001]

§ 80.240 What are the small refiner gasoline sulfur standards?

(a) The gasoline sulfur standards for an approved small refiner are as follows:

Refinery baseline sulfur level	Temporary sulfur standards for small refiners applicable from January 1, 2004 through December 31, 2007	
	Annual average	Per gallon cap
0 to 30	30.00	300
31 to 200	Baseline level	300
201 to 400	200.00	300
401 to 600	50% of baseline	Factor of 1.5 times the average standard.
601 and above	300.00	450

(b) The refinery annual average sulfur standards must be met on an annual calendar year basis for each refinery owned by a small refiner. The refinery annual average sulfur level is calculated in accordance with the provisions of § 80.205.

(c)(1) The refinery annual average standards specified in paragraph (a) of this section apply to the volume of gasoline produced by a small refiner's refinery up to the lesser of:

(i) 105% of the baseline gasoline volume as determined under § 80.250(a)(1); or

(ii) The volume of gasoline produced at that refinery during the averaging period by processing crude oil.

(2) If a refiner exceeds the volume limitation in paragraph (c)(1) of this section during any averaging period, the annual average sulfur standard applicable to the refiner for that averaging period is calculated as follows:

$$S_{sr} = \frac{(V_b \times S_b) + (AF \times (V_a - V_b))}{V_a}$$

Where:

S_{sr}=Small refiner annual average sulfur standard.

V_b=Applicable volume under paragraph (c)(1) of this section.

V_a=Averaging period gasoline volume.

S_b=Small refiner sulfur baseline as determined under § 80.250.

AF=Adjustment factor (120 in 2004; 90 in 2005; and 30 in 2006 and thereafter).

(3) The small refiner average standards under paragraph (a) of this section may be met using sulfur allotments or credits as provided under § 80.275 or § 80.315.

(4) The provisions for compliance deficits under § 80.205(e) do not apply to small refiners subject to the standards under this section.

(d) In the case of any refiner with small refiner status who generates sulfur allotments or credits pursuant to § 80.275(a) or § 80.305, the baseline applicable to that refiner's refinery for purposes of establishing the standard for the refinery under paragraph (a) of this section beginning in 2004 shall be the lowest annual average sulfur content for any year during the period in which the refiner generated allotments or credits.

(e) Notwithstanding paragraph (a) of this section, the temporary sulfur standards for small refiners may be extended as provided under § 80.553.

(f)(1) In the case of a refiner without approved small refiner status who acquires a refinery from a refiner with approved small refiner status under § 80.235, the applicable small refiner standards under paragraph (a) of this section will apply to the acquired small refinery for a period up to 30 months from the date of acquisition of the refinery, but no later than December 31, 2007, or, for a refinery for which the Administrator has approved an extension of the small refiner gasoline

sulfur standards under § 80.553(c), December 31, 2010, after which time the standards of § 80.195 shall apply to the acquired refinery.

(2) A refiner may apply to EPA for an additional six months to comply with the standards of § 80.195 for the acquired refinery if more than 30 months will be required for the necessary engineering, permitting, construction, and start-up work to be completed. Such applications must include detailed technical information supporting the need for additional time. EPA will base its decision to approve additional time on information provided by the refiner and on other relevant information. In no case will EPA extend the compliance date beyond December 31, 2007, or, for a refinery for which the Administrator has approved an extension of the small refiner gasoline sulfur standards under § 80.553(c), December 31, 2010.

[65 FR 6823, Feb. 10, 2000, as amended at 66 FR 5136, Jan. 18, 2001; 69 FR 39167, June 29, 2004]

§ 80.245 How does a small refiner apply for a sulfur baseline?

(a) Any refiner seeking small refiner status must apply for a refinery sulfur baseline by the deadline under § 80.235 for each of the refiner's refineries by providing the following information:

(1) A sulfur baseline and baseline volume for every refinery calculated in accordance with § 80.250.

(2) The following information for each batch of gasoline produced in 1997–1998:

(i) Batch number assigned to the batch under § 80.65(d) or § 80.101(i);

(ii) Volume; and

(iii) Sulfur content.

(3) For any refiner that acquires and/or reactivates a refinery that was shut down or non-operational between January 1, 1997, and December 31, 1998, the average sulfur level and average volume of gasoline produced during each annual averaging period that the refinery was in operation after the refinery was acquired and/or reactivated. EPA will evaluate all of the information and data submitted by the refiner in determining the appropriate sulfur baseline for the refinery. Where EPA concludes that the data submitted reasonably reflects current sulfur levels, the refinery's baseline will be determined based on the average sulfur content of gasoline produced by the refinery during the most recent annual averaging period in which the refinery was in operation.

(b) The sulfur baseline application must be submitted to the address specified in § 80.235(b).

(c)(1) Foreign refiners who do not have an approved individual refinery baseline under § 80.94 must follow the procedures specified in § 80.410(b).

(2) Foreign refiners who have an approved individual refinery baseline under § 80.94, but one that was not in effect for purposes of anti-dumping compliance during the 1997–1998 annual averaging periods, must comply with the requirements of this section for the gasoline produced at the refinery and imported into the United States during each of the annual averaging periods in which the refinery was subject to its individual anti-dumping baseline. EPA will evaluate all of the information and data submitted under this section in determining the foreign refinery's sulfur baseline pursuant to this paragraph. Where EPA concludes that the data submitted reasonably reflects current sulfur levels, the refinery's baseline will be determined based on the annual average sulfur level and volume of gasoline produced by the foreign refinery and imported into the U.S. during the most recent annual averaging period in which the refinery was subject to its individual anti-dumping baseline.

[65 FR 6823, Feb. 10, 2000, as amended at 66 FR 19307, Apr. 13, 2001]

§ 80.250 How is the small refiner sulfur baseline and volume determined?

(a)(1) The small refiner baseline volume is determined for each refinery as follows:

$$V_b = \frac{\sum_{i=1}^{n} (V_i)}{2}$$

Where:

V_B=Baseline volume.

V_I=Volume of gasoline batch i.

n = Total number of batches of gasoline produced from January 1, 1997, through December 31, 1998 (or the total number of batches of gasoline pursuant to § 80.245(a)(3); or, for a foreign refinery, the total number of batches of gasoline produced and imported into the U.S. from January 1, 1997, through December 31, 1998, or the total number of batches of gasoline produced and imported into the U.S. pursuant to § 80.245(c)(2)).

i = Individual batch of gasoline produced from January 1, 1997, through December 31, 1998 (or individual batch of gasoline pursuant to § 80.245(a)(3); or, for a foreign refinery, individual batch of gasoline produced and imported into the U.S. from January 1, 1997, through December 31, 1998, or individual batch of gasoline produced and imported into the U.S. pursuant to § 80.245(c)(2)).

(2) The small refiner sulfur baseline is determined for each refinery as follows:

$$S_b = \frac{\sum_{i=1}^{n} (V_i \times S_i)}{\sum_{i=1}^{n} V_i}$$

Where:

S_b=Small refiner sulfur baseline.

V_i=Volume of gasoline batch i.

S_i=Sulfur content of batch i.

n=Total number of batches of gasoline produced from January 1, 1997, through December 31, 1998 (or the total number of batches of gasoline pursuant to § 80.245(a)(3); or, for a foreign refinery, the total number of batches of gasoline produced and imported into the U.S. from January 1, 1997, through December 31, 1998, or the total number of batches of gasoline produced and imported into the U.S. pursuant to § 80.245(c)(2)).

i=Individual batch of gasoline produced from January 1, 1997, through December 31, 1998 (or individual batch of gasoline produced pursuant to § 80.245(a)(3); or, for a foreign refinery, individual batch of gasoline produced and imported into the U.S. from January 1, 1997, through December 31, 1998, or individual batch of gasoline produced and imported into the U.S. pursuant to § 80.245(c)(2)).

(3) Any refiner who, under § 80.69 or § 80.101(d)(4), included oxygenate blended downstream in compliance calculations for 1997–1998 must include this oxygenate in the baseline calculations for sulfur content under this section.

(4) Sulfur baseline calculations under this section shall be conducted to two decimal places.

(b) [Reserved]

(c) If at any time a small refinery baseline is determined to be incorrect, the corrected baseline applies ab initio and the annual average standards and cap standards are deemed to be those applicable under the corrected information.

[65 FR 6823, Feb. 10, 2000, as amended at 66 FR 19307, Apr. 13, 2001]

§ 80.255 Compliance plans and demonstration of commitment to produce low sulfur gasoline.

The requirements of this section apply to any refiner approved for small refiner standards who wishes to be eligible for a hardship extension under § 80.260.

(a) *Compliance commitment.* By no later than June 1, 2004, any refiner who is approved for small refinery standards must submit a preliminary report to EPA which outlines the refiner's timeline for compliance and a project plan which discusses permits, capital commitments and engineering plans for making the necessary modifications to produce gasoline that meets the 30 ppm refinery average and 80 ppm per-gallon cap sulfur standards under § 80.195 on or before January 1, 2008. Documents showing activities and progress in these areas should be provided, if available.

(b) *Demonstration of Progress.* (1)(i) By no later than June 1, 2005, the small refiner must submit a report to EPA that states in detail the progress toward compliance with the 30 ppm refinery average and 80 ppm cap sulfur standards to date based on their timeline and project plan. The report must include:

(A) Copies of approved permits for construction of the equipment, or the permit application if approval is still pending;

(B) Copies of contracts for design and construction; and

(C) Any available evidence of having secured the necessary financing to complete the required construction;

(ii) If the refiner anticipates any difficulties in meeting its compliance commitments under this section, the

refiner must submit a detailed report of all efforts made to date and the factors that may cause delay, including costs, specification of engineering or other design work needed and reasons for delay, specification of equipment needed and any reasons for delay, potential equipment suppliers and history of negotiations, and any other relevant information. If unavailability of equipment is a factor, the report must include a discussion of other options considered and the reasons these other options are not feasible.

(2) By no later than June 1, 2006, the small refiner must submit to EPA evidence that on-site construction has begun and that, absent unforeseen difficulties, the small refiner will be producing complying gasoline by January 1, 2008. If construction has not begun, the refiner must demonstrate that it has made all reasonable efforts to begin construction, that substantial progress is being made to begin construction as soon as possible, and that construction can be completed in time to begin production of gasoline that complies with the standards of § 80.195 by January 1, 2008.

(c) *Additional information.* The Administrator may request any additional information necessary to determine a refiner's commitment and/or progress toward meeting the standards in § 80.195 by 2008.

(d) *Failure to comply with requirements.* Any small refiner who fails to submit the progress reports required under this section will not be eligible for a hardship extension under § 80.260.

§ 80.260 What are the procedures and requirements for obtaining a hardship extension?

(a) An approved small refiner who has filed the reports specified in § 80.255 may apply to EPA for a hardship extension of the small refiner standards for calendar years 2008 and 2009. The application must be submitted in writing no later than January 1, 2007, to U.S. EPA, Attn: Sulfur Program (6406J), 1200 Pennsylvania Ave., NW., Washington, DC 20460. For commercial (non-postal) delivery: U.S. EPA, Attn: Sulfur Program, 501 3rd Street NW, Washington, DC 20001.

(b) The application must specify the factors that demonstrate a significant economic hardship and must provide a detailed discussion regarding the inability of the refinery to produce gasoline meeting the requirements of § 80.195. Such an application must include, at a minimum, the following information:

(1) Documentation of efforts made to obtain necessary financing, including:

(i) Copies of loan applications for the necessary financing of the construction of appropriate sulfur reduction technology and other equipment procurements or improvements; and

(ii) If financing has been disapproved or is otherwise unsuccessful, documents supporting the basis for that disapproval and evidence of efforts to pursue other means of financing;

(2) A detailed analysis of the reasons the refinery is unable to produce gasoline meeting the standards of § 80.195 in 2008, including costs, specification of equipment still needed, potential equipment suppliers, and efforts already completed to obtain the necessary equipment;

(3) If unavailability of equipment is part of the reason for the inability to comply, a discussion of other options considered, and the reasons these other options are not feasible;

(4) If relevant, a demonstration that a needed or lower cost technology is immediately unavailable, but will be available in the near future, and full information regarding when and from what sources it will be available;

(5) Schematic drawings of the refinery configuration as of January 1, 1999, and as of the date of the hardship extension application, and any planned future additions or changes;

(6) If relevant, a demonstration that a temporary unavailability exists of engineering or construction resources necessary for design or installation of the needed equipment;

(7) If sources of crude oil lower in sulfur than what the refiner is currently using are available, full information regarding the availability of these different crude sources, the sulfur content of those crude sources, the cost of the different crude sources over the past five years, and an estimate of gasoline sulfur levels achievable by the refinery

if the lower sulfur crude sources were used;

(8) A discussion of any sulfur reductions that can be achieved from current levels;

(9) The date the refiner anticipates compliance with the standards in § 80.195 can be achieved at its refinery;

(10) An analysis of the economic impact of compliance on the refiner's business (including financial statements from the last 5 years, or for any time period up to 10 years, at EPA's request); and

(11) Any other information regarding other strategies considered, including strategies or components of strategies that do not involve installation of equipment, and why meeting the standards in § 80.195 beginning in 2008 is infeasible.

(c) The hardship extension application must contain a letter signed by the president or the chief operating or chief executive officer of the company, or his/her designee, stating that the information contained in the application is true to the best of his/her knowledge.

§ 80.265 How will the EPA approve or disapprove a hardship extension application?

(a) EPA will evaluate each application for hardship extension on a case-by-case basis. The factors considered for a hardship extension may include: The refiner's financial position and efforts to obtain capital funding; the refiner's efforts to procure necessary equipment, obtain design and engineering services and construction contractors; the availability of desulfurization equipment; and any other relevant factor. An extension will be granted for a refinery for the 2008 averaging period if the small refiner who owns the refinery adequately demonstrates that severe economic hardship would result if compliance with the standards in § 80.195 is required in 2008, or that compliance with the standard in 2008 is not feasible for reasons beyond the refiner's control, and that the refiner has made the best efforts possible to achieve compliance with the national standards by January 1, 2008. Upon reapplication by the refiner, if EPA determines that further relief is appropriate, EPA may grant a further extension through the 2009 averaging period. In no case will a further extension for the 2009 averaging period be granted unless the refiner demonstrates conclusively that it has financing in place and that it will be able to complete construction and meet the national gasoline sulfur standards no later than December 31, 2009.

(b) EPA may request more information, if necessary, for evaluation of the application. If requested information is not submitted within the time specified in EPA's request, or any extensions granted, the application may be denied.

(c) EPA will notify the refiner of approval or disapproval of hardship extension by letter.

(1) If approved, EPA will also notify the refiner of the date that full compliance with the standards specified at § 80.195 must be achieved or what interim sulfur levels or schedules apply, if any.

(2) If disapproved, beginning January 1, 2008, the refinery is subject to the requirements in § 80.195. Refiners who receive an extension for the 2008 averaging period shall meet the standards in § 80.195 beginning on January 1, 2009, unless EPA grants an extension of the hardship relief for an additional year. If such an additional extension is granted, the refiner shall meet the standards in § 80.195 on January 1, 2010.

(d) Refiners who receive a hardship extension may be required to meet more stringent standards than those which apply to them during 2007, and/or could be required to offset excess sulfur levels. EPA may impose reasonable conditions on an extension, such as requiring segregation of the small refiner's gasoline or requiring the gasoline to be sold for use in older vehicles only.

§ 80.270 Can a refiner seek temporary relief from the requirements of this subpart?

(a) EPA may permit a refiner to produce and distribute gasoline which does not meet the requirements of this subpart if the refiner demonstrates that:

(1) Unusual circumstances exist that impose extreme hardship and significantly affect ability to comply by the applicable date; and

(2) It has made best efforts to comply with the requirements of this subpart (including making efforts to obtain credits and/or allotments).

(b) Applications must be submitted to EPA by September 1, 2000. Relief may be granted from some or all of the requirements of this subpart, at EPA's discretion; however, EPA reserves the right to deny applications for appropriate reasons, including unacceptable environmental impact. Approval to distribute gasoline which does not meet the requirements of this subpart may be granted for such time period as EPA determines is appropriate, but shall not extend beyond January 1, 2008.

(c)(1) Applications must include a plan demonstrating how the refiner will comply with the requirements of this subpart as expeditiously as possible. The plan shall include a showing that contracts are or will be in place for engineering and construction of desulfurization equipment, a plan for applying for and obtaining any permits necessary for construction, a description of plans to obtain necessary capital, and a detailed estimate of when the requirements of this subpart will be met.

(2) Applications must include a detailed description of the refinery configuration and operations, including, at a minimum, the following information:

(i) The portion of gasoline production that is produced using an FCC unit;

(ii) The refinery's hydrotreating capacity;

(iii) The refinery's total reformer unit throughput capacity;

(iv) The refinery's total crude capacity;

(v) Total crude capacity of any other refineries owned by the same entity;

(vi) Total volume of gasoline production at the refinery;

(vii) Total volume of other refinery products; and

(viii) Geographic location(s) in which gasoline will be sold.

(3) Applications must include, at a minimum, the following information:

(i) Detailed description of efforts to obtain capital for refinery investments;

(ii) Bond rating of entity that owns the refinery; and

(iii) Estimated capital investment needed to comply with the requirements of this subpart by the applicable date.

(4) Applicants must also provide any other relevant information requested by EPA.

(d) EPA may impose any reasonable conditions on waivers granted under this section.

ALLOTMENT TRADING PROGRAM

§ 80.271 How can a small refiner obtain an adjustment of its 2004–2007 per-gallon cap standard?

(a) EPA may in its discretion adjust the small refiner per-gallon cap sulfur standard established for a refinery under § 80.240(a) (the established small refiner per-gallon standard) if the refiner demonstrates that the burden of complying with the established small refiner per-gallon standard would effectively prevent the refiner from participating in the small refiner relief provided in § 80.240. No refiner will be eligible for an adjustment of its established per-gallon standard above 450 ppm. The refinery annual average sulfur standards in § 80.240(a) are not affected by this section.

(b) A refiner wishing to apply for such an adjustment of its established small refiner per-gallon sulfur standard under § 80.240(a) must send a letter to Gasoline Sulfur Program, U.S. EPA, Office of Transportation and Air Quality, 2000 Traverwood Dr., Ann Arbor, MI 48105 no later than January 1, 2003. Such application must include the following information:

(1) A detailed description of the nature of the difficulty that the per-gallon cap creates;

(2) The refiner's proposed adjusted per-gallon cap standard and the proposed duration for the adjustment, including an explanation of how a lower per-gallon cap standard or shorter duration would not address the hardship;

(3) The refiner's expected actual annual average sulfur level (i.e., prior to the use of any credits or allotments) for each year that the adjustment would be in effect;

(4) The refiner's estimate of the number of gallons of gasoline it produces that will exceed the established small refiner per-gallon standard under § 80.240(a) for each year that the adjusted per-gallon cap would apply; and

(5) The number of sulfur credits or allotments that the refiner estimates will be required under paragraph (d) of this section for each year that the adjusted per-gallon cap would apply and a plan for obtaining this number of credits or allotments.

(6) Other relevant information that EPA requests.

(c) EPA will evaluate each application for an adjusted per-gallon cap sulfur standard on a case-by-case basis. EPA may impose any reasonable conditions on adjustments granted under this section. EPA may in its discretion set forth the duration of the adjusted per-gallon cap sulfur standard but in no case shall it extend beyond December 31, 2007.

(d)(1) A small refiner with an adjusted per-gallon sulfur cap standard under paragraph (a) of this section must obtain and use sulfur credits or allotments to offset the amount that the adjusted standard exceeds the established small refiner per-gallon standard under § 80.240(a). The number of sulfur credits or allotments needed for each year that the adjusted per-gallon cap would apply is calculated on a per-batch basis according to paragraph (d)(2) of this section and summed over the averaging period.

(2) The formula for determining the number of sulfur credits or allotments that such a small refiner is required to use for any batch of gasoline exceeding the established small refiner per-gallon standard under § 80.240(a) is as follows:

$$CR_b = V_b \times (S_b - S_c)$$

Where:

CR_b = number of sulfur allotments or sulfur credits needed for the gasoline batch (ppm-gallons)

V_b = Volume of the gasoline batch (gallons)

S_b = Sulfur level of the gasoline batch (ppm)

S_c = Small refiner per-gallon cap standard established for that refinery under § 80.240(a), in ppm.

(3) Sulfur credits or allotments used when a small refiner exceeds an established per-gallon cap sulfur standard under § 80.240(a) must be separate from and in addition to credits or allotments used for any other purposes provided under § 80.275 or § 80.315.

(e) The approving official for an adjustment under this section is the Director of the Office of Transportation and Air Quality in the EPA Office of Air and Radiation.

[67 FR 40182, June 12, 2002]

§ 80.275 How are allotments generated and used?

(a) *Generation of allotments and credits in 2003.* (1) During 2003 only, any domestic or foreign refiner who produces gasoline from crude oil may have the option to generate credits in accordance with the provisions of § 80.305 or generate allotments and credits under paragraph (a)(2) of this section.

(2) If the average sulfur content of the gasoline produced at a refinery is less than the refinery's baseline as determined under § 80.295 and is 60 ppm or less, allotments and credits may be generated using the following procedures. This paragraph (a) does not apply to importers.

(i) If the average sulfur content of the gasoline produced at a refinery is less than or equal to 30, and the refinery's sulfur baseline is greater than 120, the following procedures apply:

$$SA_{TypeB} = (30 - Sa) \times V$$
$$SA_{TypeA} = V \times 90$$
$$CR = (S_{Base} - 120) \times V$$

(ii) If the average sulfur content of the gasoline produced at a refinery is less than or equal to 30, and the refinery's sulfur baseline is greater than 30 but less than or equal to 120, the following procedures apply:

$$SA_{TypeB} = (30 - S_a) \times V$$
$$SA_{TypeA} = (S_{Base} - 30) \times V$$

(iii) If the average sulfur content of the gasoline produced at a refinery is less than or equal to 30, and the refinery's sulfur baseline is less than or equal to 30, the following procedures apply:

$$SA_{TypeB} = (S_{Base} - S_a) \times V$$

(iv) If the average sulfur content of the gasoline produced at a refinery is greater than 30, and the refinery's sulfur baseline is greater than 120, the following procedures apply:

$$SA_{TypeA} = ((120 - S_a) \times V) \times 0.8$$
$$CR = (S_{Base} - 120) \times V$$

(v) If the average sulfur content of the gasoline produced at a refinery is

greater than 30, and the refinery's sulfur baseline is less than or equal to 120, the following procedures apply:

$$SA_{TypeA} = ((S_{Base} - S_a) \times V) \times 0.8$$

(vi) For purposes of the equations under paragraphs (a)(2)(i) through (v) of this section, the following definitions apply:

SA_{TypeB} = Type B sulfur allotments generated.
SA_{TypeA} = Type A sulfur allotments generated.
CR = Credits generated.
S_{Base} = Refinery's sulfur baseline value under § 80.295.
S_a = Average sulfur content of the gasoline produced at the refinery during 2003 (or for a foreign refinery, all gasoline produced during 2003 that was imported into the U.S.).
V = Volume of gasoline produced at the refinery during 2003 (or for a foreign refinery, all gasoline produced during 2003 that was imported into the U.S.).

(b) *Generation of allotments in 2004 and 2005.* During 2004 and 2005 only, refiners and importers that have corporate pool average sulfur levels below the corporate pool average standards under § 80.195 may generate sulfur allotments separately for each year using the following procedures.

(1) If the average sulfur content of the gasoline produced or imported is less than 30 the following procedures apply:

$$SA_{TypeB} = (30 - S_a) \times V_a$$
$$SA_{TypeA} = (S_{PS} - 30) \times V_a$$

(2) If the average sulfur content of the gasoline produced or imported is equal to or greater than 30 the following procedures apply:

$$SA_{TypeA} = (S_{PS} - S_a) \times V_a$$

(3) For purposes of the equations under paragraphs (b)(1) and (2) of this section, the following definitions apply:

SA_{TypeB} = Type B sulfur allotments generated.
SA_{TypeA} = Type A sulfur allotments generated.
S_a = Corporate pool average sulfur level for the year.
S_{PS} = Corporate pool average standard (120 in 2004; 90 in 2005).
V_a = Total volume of gasoline produced and/or imported during the year.

(4) Oxygenate blenders may not generate allotments under this section.

(c) *Use of sulfur allotments to meet standards.* (1) Refiners and importers may use Type A and Type B sulfur allotments to meet the corporate pool average standards under § 80.195, except that if allotments generated in 2003 or 2004 are used to meet the corporate pool standard in 2005 the allotments generated in 2003 or 2004 shall be reduced in value by 50%.

(2)(i) Small refiners subject to the standards under § 80.240, and refiners and importers of gasoline designated as GPA gasoline under § 80.219(a), may use sulfur allotments to meet their annual average refinery or importer standards.

(ii) Small refiners subject to the standards under § 80.240 and that have received an adjustment of their per-gallon cap sulfur standards pursuant to § 80.271(a) may also use sulfur allotments to meet the requirements of § 80.271(d)(1) for any refinery that has received such an adjustment.

(d) *Transfers of sulfur allotments.* Sulfur allotments generated under this section may be transferred, provided that:

(1) No allotment may be transferred more than twice: The first transfer by the refiner or importer who generated the allotment may only be made to a refiner or importer who intends to use the allotment; if the transferee cannot use the allotment, it may make the second, and final, transfer only to a refiner or importer who intends to use the allotment. In no case may an allotment be transferred more than twice before being used or terminated.

(2) The allotment transferor must apply any allotments necessary to meet the transferor's corporate pool average standard before transferring allotments to any other refiner or importer or before converting allotments into credits.

(3) The transferor must supply to the transferee records indicating the year of generation and type of the allotments, the identity of the refiner or importer who generated the allotments, and the identity of the transferring party, if it is not the same part that generated the allotments.

(4) The transferor must inform the transferee whether any transferred allotments are Type A allotments or Type B allotments, as defined in paragraphs (a) and (b) of this section.

(5) In the case of allotments that have been calculated or created improperly, or are otherwise determined to be invalid, the following provisions apply:

(i) Invalid allotments cannot be used to achieve compliance with the transferee's corporate pool average standard or be converted to credits, regardless of the transferee's good faith belief that the allotments were valid.

(ii) The refiner or importer who used the allotments, and any transferor of the allotments, must adjust their allotment records and reports and sulfur calculations as necessary to reflect the proper allotments.

(iii) Any allotments remaining after correcting for the improperly created allotments must first be applied to correct the invalid transfers before the transferor may transfer any other allotments or before converting allotments into credits.

(e) *Conversion of allotments into credits.* A refiner or importer may convert allotments into credits using the following procedures:

(1) Type A allotments may be converted into credits with the same requirements and limitations on use that apply under § 80.315 to credits generated in 2000 through 2003.

(2) Type B allotments may be converted into credits with the same requirements and limitations on use that apply under § 80.315 to credits generated in 2004 and later, based on the year of creation of the allotment.

(3) Allotments generated in 2003 or 2004 which are carried over to 2005 are discounted by 50 percent. The discounted allotments may be used to demonstrate compliance with the corporate pool average standard in 2005, or they may be converted into credits for use in demonstrating compliance with the refinery average standard in 2005, or in a subsequent averaging period, in accordance with the provisions of this paragraph (e). Any allotments generated in 2003 or 2004 that are converted into credits before being carried over to 2005 are not discounted. Any allotments generated in 2003 or 2004 that are converted into credits before being carried over to 2005 may be reconverted into allotments for use in demonstrating compliance with the corporate pool average standard in 2005, but such reconverted allotments are discounted by 50 percent.

(f) *Small refiners.* Small refiners subject to the standards under § 80.240 may not generate sulfur allotments under paragraph (b) of this section.

(g) *GPA gasoline.* GPA gasoline that is included in the refiner's or importer's corporate pool average under § 80.216(f)(2) must be included in the calculations under paragraph (b) of this section. No refiner or importer may generate allotments in 2004 or 2005 who is not required to meet the corporate pool average standards.

(h) Allotments and credits under this program are in units of ''ppm-gallons''.

[65 FR 6823, Feb. 10, 2000, as amended at 67 FR 40183, June 12, 2002]

AVERAGING, BANKING AND TRADING (ABT) PROGRAM—GENERAL INFORMATION

§ 80.280 [Reserved]

§ 80.285 Who may generate credits under the ABT program?

(a) *Credit generation in 2000 through 2003.* (1) Credits may be generated in 2000 through 2003 under § 80.305 by refiners who produce gasoline from crude oil, and are:

(i) Refiners who establish a sulfur baseline under § 80.295 for a refinery;

(ii) Foreign refiners for refineries with an approved baseline under § 80.94, or refineries with baselines established in accordance with § 80.290(d); or

(iii) Small refiners for any refinery subject to the standards under § 80.240, using their small refiner baseline established under § 80.250 for that refinery.

(2) Importers and oxygenate blenders may not generate credits under § 80.305.

(b) *Credit generation beginning in 2004.* (1) Credits may be generated beginning in 2004 under § 80.310 by:

(i) Refiners for any refinery, and importers subject to the standards under § 80.195;

(ii) Refiners and importers of gasoline designated as GPA gasoline under § 80.219, using the least of 150.00 ppm, or the refinery's or importer's 1997–98 baseline calculated under § 80.295 plus 30.00 ppm, or the refinery's lowest annual average sulfur level for any year from 2000 through 2003 during which the refinery generated credits or allotments plus 30.00 ppm (for any party generating credits under both paragraphs (b)(1)(i) of this section and this paragraph (b)(1)(ii), such credits must be calculated separately); or

(iii) Small refiners for any refinery subject to the standards under § 80.240, using refinery's standard established under § 80.240.

(2) Generation of credits under § 80.310 for all imported gasoline shall be through the importer.

(3) Oxygenate blenders may not generate credits under § 80.310.

[65 FR 6823, Feb. 10, 2000, as amended at 66 FR 19307, Apr. 13, 2001; 67 FR 40183, June 12, 2002; 71 FR 54912, Sept. 20, 2006]

§ 80.290 How does a refiner apply for a sulfur baseline?

(a) The refiner must submit an application to EPA which includes the information required under paragraph (c) of this section no later than September 30 of the year in which the refiner plans to begin generating credits, or the refiner or an importer plans to sell gasoline in the geographic phase-in area in accordance with § 80.217.

(b) The sulfur baseline request must be sent to: U.S. EPA, Attn: Sulfur Program (6406J), 1200 Pennsylvania Ave., NW Washington, DC 20460. For commercial (non-postal) delivery: U.S. EPA, Attn: Sulfur Program, 501 3rd Street NW., Washington, DC 20001.

(c) The sulfur baseline application must include the following information:

(1) A listing of the names and addresses of all refineries owned by the corporation for which the refiner is applying for a sulfur baseline.

(2) The annual average gasoline sulfur baseline for gasoline produced in 1997–1998, for each refinery for which the refiner is applying for a sulfur baseline, calculated in accordance with § 80.295.

(3) A letter signed by the president, chief operating or chief executive officer, of the company, or his/her delegate, stating that the information contained in the sulfur baseline determination is true to the best of his/her knowledge.

(4) Name, address, phone number, facsimile number and E-mail address of a corporate contact person.

(5) The following information for each batch of gasoline produced in 1997–1998:

(i) Batch number assigned to the batch under § 80.65(d) or § 80.101(i);

(ii) Volume; and

(iii) Sulfur content.

(6) For any refiner that acquires and/or reactivates a refinery that was shut down or non-operational between January 1, 1997, and December 31, 1998, the average sulfur level of gasoline produced during each annual averaging period that the refinery was in operation after the refinery was acquired and/or reactivated. EPA will evaluate all of the data submitted by the refiner in determining the appropriate sulfur baseline for the refinery. Where EPA concludes that the data submitted reasonably reflects current sulfur levels, the refinery's baseline will be determined based on the average sulfur content of the refinery's gasoline production during the most recent annual averaging period the refinery was in operation.

(d)(1) Foreign refiners who do not have an approved refinery baseline under § 80.94 must follow the procedures specified in § 80.410(b).

(2) Foreign refiners who have an approved individual refinery baseline under § 80.94, but one that was not in effect for purposes of anti-dumping compliance during the 1997–1998 annual averaging periods, must comply with the requirements of this section for the gasoline produced at the refinery and imported to the U.S. during each annual averaging period in which the refinery was subject to its individual anti-dumping baseline. EPA will evaluate all of the information and data submitted under this section in determining a foreign refinery's sulfur baseline pursuant to this paragraph (d). Where EPA concludes that the data submitted reasonably reflects current

sulfur levels, a foreign refinery's baseline sulfur level under this paragraph will be determined based on the average sulfur level of gasoline produced by the foreign refinery and imported to the U.S. during the most recent annual averaging period in which the refinery was subject to its individual antidumping baseline.

(e) Within 60 days of receipt of an application under this section, EPA will notify the refiner of approval of the refinery's baseline or of any deficiencies in the application.

(f) If at any time the baseline submitted in accordance with the requirements of this section is determined to be incorrect, EPA will notify the refiner of the corrected baseline.

(g) Any refiner that seeks temporary relief under § 80.270 shall apply for a refinery sulfur baseline in accordance with the provisions of this section and § 80.295, and if applicable, § 80.410(b), no later than September 1, 2000.

[65 FR 6823, Feb. 10, 2000, as amended at 66 FR 19308, Apr. 13, 2001]

ABT PROGRAM—BASELINE DETERMINATION

§ 80.295 How is a refinery sulfur baseline determined?

(a) A refinery's gasoline sulfur baseline for the purpose of generating credits during years 2000 through 2003 is calculated using the following equation:

$$S_{Base} = \frac{\sum_{i=1}^{n}(Vi \times Si)}{\sum_{i=1}^{n} Vi}$$

Where:

S_{Base}=Sulfur baseline value.

V_i=Volume of gasoline batch i.

S_i=Sulfur content of gasoline batch i.

n = Total number of batches of gasoline produced during January 1, 1997 through December 31, 1998 (or the total number of batches of gasoline pursuant to § 80.290(c)(6); or, for a foreign refinery, the total number of batches of gasoline produced and imported into the U.S. during January 1, 1997 through December 31, 1998, or, the total number of batches of gasoline produced and imported into the U.S. pursuant to § 80.290(d)(2)).

i = Individual batch of gasoline produced during January 1, 1997 through December 31, 1998 (or individual batch of gasoline produced pursuant to § 80.290(c)(6); or, for a foreign refinery, individual batch of gasoline produced and imported into the U.S. during January 1, 1997 through December 31, 1998, or, individual batch of gasoline produced and imported into the U.S. pursuant to § 80.290(d)(2)).

(b) Any refiner who, under § 80.69 or § 80.101(d)(4), included oxygenate blended downstream in compliance calculations for 1997–1998 for a refinery must include this oxygenate in the baseline calculations for sulfur content for that refinery under paragraph (a) of this section.

(c) Sulfur baseline calculations under this section shall be conducted to two decimal places.

[65 FR 6823, Feb. 10, 2000, as amended at 66 FR 19308, Apr. 13, 2001]

§ 80.300 [Reserved]

ABT PROGRAM—CREDIT GENERATION

§ 80.305 How are credits generated during the time period 2000 through 2003?

(a) Credits must be calculated as follows:

$$CR_a = V_a \times (S_{Base} - S_a)$$

Where:

CR_a=Credits generated for the averaging period.

V_a = Total volume of gasoline produced during the averaging period at the refinery (or for a foreign refinery, the total volume of gasoline produced during the averaging period at the refinery that was imported into the U.S. in accordance with the requirements of § 80.410)

S_{Base}=Sulfur baseline value for the refinery established under § 80.250 or § 80.295.

S_a = Actual annual average sulfur level, calculated in accordance with the provisions of § 80.205, for gasoline produced during the averaging period by the refinery, exclusive of any credits, (or for a foreign refinery, the actual average sulfur level, calculated in accordance with the provisions of § 80.205, for gasoline produced during the averaging period at the refinery that was imported into the U.S., in accordance with the requirements of § 80.410, exclusive of any credits.)

(b) The refiner may include any oxygenates included in its RFG or conventional gasoline volume under §§ 80.65

and 80.101(d)(4), respectively, for the purpose of generating credits.

(c) Credits under this program are in units of ''ppm-gallons''.

(d) Refiners may generate credits for gasoline produced during an averaging period for a refinery only if the annual average sulfur level for the gasoline produced at that refinery during the averaging period is less than 0.90 of the refinery's baseline under § 80.250 or § 80.295.

(e) Credits generated in accordance with paragraph (a) of this section must be identified by the year of creation.

(f) For gasoline produced during the year 2000, the averaging period for credits generated in accordance with paragraph (a) of this section may be less than the full calendar year. Such partial-year averaging period will begin with the first full month for which all applicable sampling, testing, and documentation requirements are met.

[65 FR 6823, Feb. 10, 2000, as amended at 66 FR 19308, Apr. 13, 2001; 67 FR 40183, June 12, 2002]

§ 80.310 How are credits generated beginning in 2004?

(a) A refiner for any refinery, or an importer, may generate credits in 2004 and thereafter if the annual average sulfur level for gasoline produced or imported for the averaging period is less than 30.00 ppm; or, for refiners that are subject to the small refiner standards in § 80.240, the small refiner annual average sulfur standard applicable to that refinery; or, for refiners and importers subject to the GPA standards in § 80.216, the least of 150.00 ppm, or the refinery's or importer's 1997–1998 sulfur level calculated under § 80.295 plus 30.00 ppm, or the refinery's lowest annual average sulfur level for any year from 2000 through 2003 during which the refinery generated credits or allotments plus 30.00 ppm.

(b) Credits are calculated as follows:

$$CR_a = V_a \times (S_{Credit} - S_a)$$

Where:

CR_a = Credits generated for the averaging period.

V_a = Total annual volume of gasoline produced at a refinery or imported during the averaging period.

S_{Credit} = 30.00 ppm; or the sulfur standard for a small refinery established under § 80.240; or, for gasoline designated as GPA gasoline under § 80.219, the least of 150.00 ppm, or the refinery's or importer's 1997–1998 sulfur level calculated under § 80.295 plus 30.00 ppm, or the refinery's lowest annual average sulfur level for any year from 2000 through 2003 during which the refinery generated credits or allotments plus 30.00 ppm.

S_a = Actual annual average sulfur level, calculated in accordance with the provisions of § 80.205, for gasoline produced at a refinery or imported during the averaging period, exclusive of any credits.

(c) Credits generated in accordance with this section must be identified by the year of creation.

[65 FR 6823, Feb. 10, 2000, as amended at 66 FR 19308, Apr. 13, 2001; 67 FR 40184, June 12, 2002; 71 FR 54912, Sept. 20, 2006]

ABT PROGRAM—CREDIT USE

§ 80.315 How are credits used and what are the limitations on credit use?

(a) *Credit use.* Credits may be used to meet the applicable refinery or importer annual average sulfur standards under § 80.195, § 80.216, or § 80.240, or may be used to meet the offset requirement under § 80.271(d)(1) for any refinery with an adjustment of itsper-gallon cap standard pursuant to § 80.271(a), provided that:

(1) Sulfur credits used were generated pursuant to the requirements of this subpart; and

(2) The requirements of paragraphs (b) and (c) of this section are met.

(b) *Credit transfers.* (1) Credits obtained from other persons may be used to meet the annual average standards specified in § 80.195, § 80.216, or § 80.240, or may be used to meet the offset requirement under § 80.271(d)(1) for any refinery with an adjustment of itsper-gallon cap standard pursuant to § 80.271(a), if all the following conditions are met:

(i) The credits are generated and reported according to the requirements of this subpart.

(ii) The credits are used in compliance with the limitations regarding the appropriate periods for credit use in this subpart.

(iii) Any credit transfer takes place no later than the last day of February

following the calendar year averaging period when the credits are used.

(iv) No credit may be transferred more than twice: The first transfer by the refiner or importer who generated the credit may only be made to a refiner or importer who intends to use the credit; if the transferee cannot use the credit, it may make the second, and final, transfer only to a refiner or importer who intends to use the credit. In no case may a credit be transferred more than twice before being used or terminated.

(v) The credit transferor must apply any credits necessary to meet the transferor's applicable average standard before transferring credits to any other refiner or importer.

(vi) No credits may be transferred that would result in the transferor having a negative credit balance.

(vii) Each transferor must supply to the transferee records indicating the years the credits were generated, the identity of the refiner or importer who generated the credits, and the identity of the transferring party, if it is not the same party that generated the credits.

(2) In the case of credits that have been calculated or created improperly, or are otherwise determined to be invalid, the following provisions apply:

(i) Where a refiner's baseline has been determined to be incorrect under § 80.250(c) or § 80.290(f), any credits generated, banked, used or traded must be adjusted to reflect the corrected baseline.

(ii) Invalid credits cannot be used to achieve compliance with the transferee's averaging standard, regardless of the transferee's good faith belief that the credits were valid.

(iii) The refiner or importer who used the credits, and any transferor of the credits, must adjust their credit records and reports and sulfur calculations as necessary to reflect the proper credits.

(iv) Any properly created credits existing in the transferor's credit balance after correcting the credit balance, and after the transferor applies credits as needed to meet the average standard at the end of the compliance year, must first be applied to correct the invalid transfers before the transferor trades or banks the credits.

(c) *Limitations on credit use.* (1) Credits generated prior to 2004 may only be used for demonstrating compliance with the refinery or importer annual average standards under § 80.195 during the 2005 and 2006 averaging periods. Such credits may be used to demonstrate compliance with the standards under § 80.216 during the 2004 through 2006 averaging periods, and with the standards under § 80.240 during the 2004 through 2007 averaging periods, and the 2008 and 2009 averaging periods, if allowed under the terms of a hardship extension under § 80.265.

(2) Credits generated in 2004 or later may only be used for demonstrating compliance with standards during an averaging period within five years of the year of generation.

(3) A refiner or importer possessing credits must use all credits prior to falling into compliance deficit under § 80.205(e).

(4) Credits may not be used to meet corporate pool average standards under § 80.195.

[65 FR 6823, Feb. 10, 2000, as amended at 67 FR 40184, June 12, 2002]

§§ 80.320–80.325 [Reserved]

SAMPLING, TESTING AND RETENTION REQUIREMENTS FOR REFINERS AND IMPORTERS

§ 80.330 What are the sampling and testing requirements for refiners and importers?

(a) *Sample and test each batch of gasoline.* (1) Refiners and importers shall collect a representative sample from each batch of gasoline produced or imported and test each sample to determine its sulfur content for compliance with requirements under this subpart prior to the gasoline leaving the refinery or import facility, using the sampling and testing methods provided in this section.

(2) Except as provided in paragraph (a)(3) of this section, the requirements of this section apply beginning January 1, 2004, or January 1 of the first year of allotment or credit generation under § 80.275 or § 80.305, whichever is earlier.

(3) Prior to January 1, 2004:

(i) Any refiner may release gasoline from the refinery prior to obtaining the test results required under paragraph (a)(1) of this section.

(ii) Any refiner of conventional gasoline may combine samples of gasoline from more than one batch of gasoline or blendstock prior to analysis and treat such composite sample as one batch of gasoline or blendstock pursuant to the requirements of § 80.101(i)(2).

(4)(i) Beginning January 1, 2004, any refiner who produces gasoline using computer-controlled in-line blending equipment is exempt from the requirement of paragraph (a)(1) of this section to obtain the test results required under paragraph (a)(1) of this section prior to the gasoline leaving the refinery, provided that the refiner obtains an exemption from this requirement from EPA. To obtain such exemption, the refiner must:

(A) Have been granted an in-line blending exemption under § 80.65(f)(4); or

(B) If the refiner has not been granted an exemption under § 80.65(f)(4), submit to EPA all of the information required under § 80.65(f)(4)(i)(A). A letter signed by the president, chief operating or chief executive officer of the company, or his/her designee, stating that the information contained in the submission is true to the best of his/her belief must accompany any submission under this paragraph (a)(4)(i)(B).

(ii) Refiners who seek an exemption under paragraph (a)(4)(i) of this section must comply with any request by EPA for additional information or any other requirements that EPA includes as part of the exemption.

(iii) Within 60 days of EPA's receipt of a submission under paragraph (a)(4)(i)(B) of this section, EPA will notify the refiner if the exemption is not approved or of any deficiencies in the refiner's submission, or if any additional information is required or other requirements are included in the exemption pursuant to paragraph (a)(4)(ii) of this section. In the absence of such notification from EPA, the effective date of an exemption under paragraph (a)(4)(i) of this section for refiners who do not hold an exemption under § 80.65(f)(4) is 60 days from EPA's receipt of the refiner's submission under paragraph (a)(4)(i)(B) of this section.

(iv) EPA reserves the right to modify the requirements of an exemption under paragraph (a)(4)(i) of this section, in whole or in part, at any time, if EPA determines that the refiner's operation does not effectively or adequately control, monitor or document the sulfur content of the refinery's gasoline production, or if EPA determines that any other circumstances exist which merit modification of the requirements of an exemption, such as advancements in the state of the art for in-line blending measurement which allow for additional control or more accurate monitoring or documentation of sulfur content. If EPA finds that a refiner provided false or inaccurate information in any submission required for an exemption under this section, upon notification from EPA, the refiner's exemption will be void ab initio.

(b) *Sampling methods.* For purposes of paragraph (a) of this section, refiners and importers shall sample each batch of gasoline by using one of the following methods:

(1) Manual sampling of tanks and pipelines shall be performed according to the applicable procedures specified in one of the two following methods:

(i) American Society for Testing and Materials (ASTM) method D 4057–95, entitled ''Standard Practice for Manual Sampling of Petroleum and Petroleum Products.''

(ii) Samples collected under the applicable procedures in ASTM method D 5842–95, entitled ''Standard Practice for Sampling and Handling of Fuels for Volatility Measurement,'' may be used for measuring sulfur content if there is no contamination present that could affect the sulfur test result.

(2) Automatic sampling of petroleum products in pipelines shall be performed according to the applicable procedures specified in ASTM method D 4177–95, entitled ''Standard Practice for Automatic Sampling of Petroleum and Petroleum Products.''

(c) *Test method for measuring sulfur content of gasoline.* (1) For purposes of paragraph (a) of this section, refiners and importers shall use the method

provided in § 80.46(a)(1) or one of the alternative test methods listed in § 80.46(a)(3) to measure the sulfur content of gasoline they produce or import.

(2) Except as provided in § 80.350 and in paragraph (c)(1) of this section, any ASTM sulfur test method for liquefied fuels may be used for quality assurance testing under § 80.400, or to determine whether gasoline qualifies for a S-RGAS downstream standard, if the protocols of the ASTM method are followed and the alternative method is correlated to the method provided in § 80.46(a)(1).

(d) *Test method for sulfur in butane.* (1) Refiners and importers shall use the method provided in § 80.46(a)(2) to measure the sulfur content of butane when the butane constitutes a batch of gasoline.

(2) Except as provided in paragraph (d)(1) of this section, any ASTM sulfur test method for gaseous fuels may be used for quality assurance testing under §§ 80.340(b)(4) and 80.400, if the protocols of the ASTM method are followed and the alternative method is correlated to the method provided in § 80.46(a)(2).

(e) *Incorporations by reference.* ASTM standard practices D 4057–95, D 4177–95 and D 5842–95 are incorporated by reference. These incorporations by reference were approved by the Director of the Federal Register in accordance with 5 U.S.C. 552(a) and 1 CFR part 51. Copies may be obtained from the American Society for Testing and Materials, 100 Barr Harbor Dr., West Conshohocken, PA 19428. Copies may be inspected at the Air Docket Section (LE–131), room M–1500, U.S. Environmental Protection Agency, Docket No. A–97–03, 1200 Pennsylvania Ave., NW., Washington, DC 20460, or at the National Archives and Records Administration (NARA). For information on the availability of this material at NARA, call 202–741–6030, or go to: *http://www.archives.gov/federal_register/code_of_federal_regulations/ibr_locations.html.*

[65 FR 6823, Feb. 10, 2000, as amended at 66 FR 19308, Apr. 13, 2001; 68 FR 57820, Oct. 7, 2003]

§ 80.335 What gasoline sample retention requirements apply to refiners and importers?

(a) *Sample retention requirements.* Beginning January 1, 2004, or January 1 of the first year allotments or credits are generated under §§ 80.275 and 80.305, whichever is earlier, any refiner or importer shall:

(1) Collect a representative portion of each sample analyzed under § 80.330(a), of at least 330 ml in volume;

(2) Retain sample portions for the most recent 20 samples collected, or for each sample collected during the most recent 21 day period, whichever is greater, not to exceed 90 days for any given sample;

(3) Comply with the gasoline sample handling and storage procedures under § 80.330(b) for each sample portion retained; and

(4) Comply with any request by EPA to:

(i) Provide a retained sample portion to the Administrator's authorized representative; and

(ii) Ship a retained sample portion to EPA, within 2 working days of the date of the request, by an overnight shipping service or comparable means, to the address and following procedures specified by EPA, and accompanied with the sulfur test result for the sample determined under § 80.330(a).

(b) *Sample retention requirement for samples subject to independent analysis requirements.* (1) Any refiner or importer who meets the independent analysis requirements under § 80.65(f) for any batch of reformulated gasoline or RBOB will have met the requirements of paragraph (a) of this section, provided the independent laboratory meets the requirements of paragraph (a) of this section for the gasoline batch.

(2) For samples retained by an independent laboratory under paragraph (b) of this section, the test results required to be submitted under paragraph (a) of this section shall be the test results determined under § 80.65(e).

(c) *Sampling compliance certification.* Any refiner or importer shall include with each annual report filed under § 80.370, the following statement, which must accurately reflect the facts and

must be signed and dated by the same person who signs the annual report:

I certify that I have made inquiries that are sufficient to give me knowledge of the procedures to collect and store gasoline samples, and I further certify that the procedures meet the requirements of the ASTM procedures required under 40 CFR 80.330.

(d) Prior to January 1, 2004, for purposes of complying with the requirements of this section, refiners who analyze composited samples under § 80.330(a)(3) must retain portions of the composited samples. Portions of samples of each batch comprising the composited samples are not required to be retained.

(e) For purposes of complying with the requirements of this section for RBOB, a sample of each RBOB batch produced plus a sample of the ethanol used to conduct the handblend testing pursuant to § 80.69 must be retained.

[65 FR 6823, Feb. 10, 2000, as amended at 66 FR 19309, Apr. 13, 2001]

§ 80.340 What standards and requirements apply to refiners producing gasoline by blending blendstocks into previously certified gasoline (PCG)?

(a) Any refiner who produces gasoline by blending blendstock into PCG must meet the requirements of § 80.330 to sample and test every batch of gasoline as follows:

(1)(i) Sample and test to determine the volume and sulfur content of the PCG prior to blendstock blending.

(ii) Sample and test to determine the volume and sulfur content of the gasoline subsequent to blendstock blending.

(iii) Calculate the volume and sulfur content of the blendstock, by subtracting the volume and sulfur content of the PCG from the volume and sulfur content of the gasoline subsequent to blendstock blending. The blendstock is a batch for purposes of compliance calculations and reporting. For purposes of this paragraph (a), compliance with the applicable cap standard under § 80.195(a) shall be determined based on the sulfur content of the gasoline subsequent to blendstock blending.

(2) In the alternative, a refiner may sample and test each batch of blendstock when received at the refinery to determine the volume and sulfur content, and treat each blendstock receipt as a separate batch for purposes of compliance calculations for the annual average sulfur standard and for reporting. This alternative applies only if every batch of blendstock used at a refinery during an averaging period has a sulfur content that is equal to, or less than, the applicable per-gallon cap standard under § 80.195 or § 80.216.

(b) Refiners who blend only butane into PCG may meet the sampling and testing requirements by using sulfur test results of the butane supplier, provided that the following requirements are also met:

(1) The sulfur content of the butane received from the butane supplier must not exceed the following sulfur standards on a per-gallon basis as follows:

(i) 120 ppm in 2004, and 30 ppm for 2005 and any subsequent year;

(ii) Except that the per-gallon sulfur content of butane blended to PCG that is designated as GPA gasoline shall not exceed 150 ppm from January 1, 2004, through December 31, 2006.

(2) The refiner obtains test results from the butane supplier that demonstrate that the sulfur content of each load of butane supplied does not exceed the applicable per-gallon sulfur standard under paragraph (b)(1) of this section through test results of samples of the butane contained in the storage tank from which the butane blender is supplied.

(i) Testing for the sulfur content of the butane by the supplier must be subsequent to each receipt of butane into the supplier's storage tank, or the testing must be immediately before transfer of butane to the butane blender.

(ii) The testing must be performed by the method specified in § 80.46(a)(2) or by the alternative method specified in § 80.46(a)(4).

(iii) The butane blender must obtain a copy of the butane supplier's test results, at the time of each transfer of butane to the butane blender, that reflect the sulfur content of each load of butane supplied to the butane blender.

(3) The sulfur content and volume of each batch of gasoline produced is that of the butane the refiner blends into gasoline for purposes of calculating compliance with the standards in §§ 80.195 and 80.216.

(4) The refiner must conduct a quality assurance program of sampling and testing for each butane supplier that demonstrates the butane sulfur content does not exceed the applicable per-gallon sulfur standard in paragraph (b)(1) of this section. The frequency of butane sampling and testing, for each butane supplier, must be one sample for every 500,000 gallons of butane received, or one sample every 3 months, whichever results in more frequent sampling.

(5) If any of the requirements of this section are not met, in whole or in part, for any butane blended into gasoline, that butane is deemed in violation of the gasoline sulfur standards in § 80.195 or § 80.216, as applicable.

(c) The procedures in §§ 80.65(i) and 80.101(g)(9) may be applied for purposes of demonstrating compliance with the sulfur standards under this subpart.

[65 FR 6823, Feb. 10, 2000, as amended at 66 FR 67108, Dec. 28, 2001; 68 FR 57820, Oct. 7, 2003]

§ 80.345 [Reserved]

§ 80.350 What alternative sulfur standards and requirements apply to importers who transport gasoline by truck?

Importers who import gasoline into the United States by truck may comply with the following requirements instead of the requirements to sample and test every batch of gasoline under § 80.330, and the annual sulfur average and per-gallon cap standards otherwise applicable to importers under §§ 80.195 and 80.216:

(a) *Alternative standards.* The imported gasoline must comply with the standards in paragraph (a)(1) or (a)(2) of this section as follows:

(1) The applicable average standards, corporate average standards and per-gallon standards under § 80.195(a)(1), except that imported gasoline designated for use in the geographic phase-in area from January 1, 2004, through December 31, 2006 must comply with an average standard of 150 ppm and a per-gallon standard of 300 ppm; or

(2) In 2004, a per-gallon standard of 120 ppm, and in 2005 and subsequent years a per-gallon standard of 30 ppm, except that imported gasoline designated for use in the geographic phase-in area from January 1, 2004, through December 31, 2006 must comply with a per-gallon standard of 150 ppm.

(b) *Terminal testing.* The importer may use test results for sulfur content testing conducted by the terminal operator, for gasoline contained in the storage tank from which trucks used to transport gasoline into the United States are loaded, for purposes of demonstrating compliance with the standards in paragraph (a) of this section, provided the following conditions are met:

(1) The sampling and testing shall be performed after each receipt of gasoline into the storage tank, or immediately before each transfer of gasoline to the importer's truck.

(2) The sampling and testing shall be performed using the methods specified in §§ 80.330(b) and 80.46(a)(1) or one of the alternative test methods listed in § 80.46(a)(3), respectively.

(3) At the time of each transfer of gasoline to the importer's truck for import to the U.S., the importer must obtain a copy of the terminal test result that indicates the sulfur content of the truck load.

(c) *Quality assurance program.* The importer must conduct a quality assurance program, as specified in this paragraph, for each truck loading terminal.

(1) Quality assurance samples must be obtained from the truck-loading terminal and tested by the importer, or by an independent laboratory, and the terminal operator must not know in advance when samples are to be collected.

(2) The sampling and testing must be performed using the methods specified in §§ 80.330(b) and 80.46(a)(1), respectively.

(3) The quality assurance test results for sulfur must differ from the terminal test result by no more than the ASTM reproducibility of the terminal's test results, as determined by the following equation:

$$R = 105 \times ((S+2)/10^4)^{0.4}$$

Where:

R = ASTM reproducibility.

S = Sulfur content based on the terminal's test result.

(4) The frequency of the quality assurance sampling and testing must be at least one sample for each fifty of an importer's trucks that are loaded at a terminal, or one sample per month, whichever is more frequent.

(d) *Party required to conduct quality assurance testing.* The quality assurance program under paragraph (c) of this section shall be conducted by the importer. In the alternative, this testing may be conducted by an independent laboratory that meets the criteria under § 80.65(f)(2)(iii), provided the importer receives, no later than 21 days after the sample was taken, copies of all results of tests conducted.

(e) *Assignment of batch numbers.* The importer must treat each truck load of imported gasoline as a separate batch for purposes of assigning batch numbers and maintaining records under § 80.365, and reporting under § 80.370.

(f) *EPA inspections of terminals.* EPA inspectors or auditors, and auditors conducting attest engagements under § 80.415, must be given full and immediate access to the truck-loading terminal and any laboratory at which samples of gasoline collected at the terminal are analyzed, and must be allowed to conduct inspections, review records, collect gasoline samples, and perform audits. These inspections or audits may be either announced or unannounced.

(g) *Certified Sulfur-FRGAS.* This section does not apply to Certified Sulfur-FRGAS.

(h) *Reporting requirements.* Any importer who elects to comply with the alternative standards in paragraph (a) of this section shall comply with the following requirements:

(1) All importer recordkeeping and reporting requirements under §§ 80.365 and 80.370, except as provided in paragraph (h)(2) of this section.

(2) An importer who elects to comply with the alternative standards in paragraph (a)(2) of this section must certify in the annual report whether it is in compliance with the applicable per-gallon batch standard set forth in paragraph (a)(2) of this section, in lieu of providing the information required by § 80.370(a) regarding annual average sulfur content and compliance with the average standard under § 80.195.

(i) *Effect of noncompliance.* If any of the requirements of this section are not met, all gasoline imported by the truck importer during the time any requirements are not met is deemed in violation of the gasoline sulfur average and per-gallon cap standards in § 80.195 or § 80.216, as applicable. Additionally, if any requirement is not met, EPA may notify the importer of the violation and, if the requirement is not fulfilled within 10 days of notification, the truck importer may not in the future use the sampling and testing provisions in this section in lieu of the provisions in § 80.330.

[38 FR 1255, Jan. 10, 1973, as amended at 68 FR 57820, Oct. 7, 2003]

§ 80.355 [Reserved]

RECORDKEEPING AND REPORTING REQUIREMENTS

§ 80.360 [Reserved]

§ 80.365 What records must be kept?

(a) *Records that must be kept.* Beginning January 1, 2004, any person who produces, imports, sells, offers for sale, dispenses, distributes, supplies, offers for supply, stores, or transports gasoline, shall keep records that contain the following information:

(1) The product transfer document information required under §§ 80.77, 80.106, 80.210 and 80.219; and

(2) For any sampling and testing for sulfur content required under this subpart:

(i) The location, date, time and storage tank or truck identification for each sample collected;

(ii) The name and title of the person who collected the sample and the person who performed the test;

(iii) The results of the test as originally printed by the testing apparatus, or where no printed result is produced, the results as originally recorded by the person who performed the test; and

(iv) Any record that contains a test result for the sample that is not identical to the result recorded under paragraph (a)(2)(iii) of this section.

(b) *Additional records that refiners and importers must keep.* Beginning January 1, 2004, or January 1 of the first year allotments or credits are generated

under § 80.275 or § 80.305, whichever is earlier, any refiner for each of its refineries, and any importer for the gasoline it imports, shall keep records that include the following information:

(1) For each batch of gasoline produced or imported:

(i) The batch volume;

(ii) The batch number assigned under § 80.65(d)(3) and the appropriate designation under paragraph (b)(1)(i) of this section; except that if composite samples of conventional gasoline representing multiple batches produced subsequent to December 31, 2003, are tested under § 80.101(i)(2) for anti-dumping compliance purposes, for purposes of this subpart a separate batch number must be assigned to each batch using the batch numbering procedures under § 80.65(d)(3);

(iii) The date of production or importation; and

(iv) If appropriate, the designation of the batch as GPA gasoline under § 80.219, California gasoline under § 80.375, exempt gasoline for research and development under § 80.380, or for export outside the United States.

(2) Information regarding credits and allotments, separately kept for credits and for allotments; separately kept according to the year of creation for the credits and for the allotments; and for credit generation or use starting in 2004, separately kept for GPA gasoline and other gasoline. Information shall be kept separately for different types of allotments and credits generated under §§ 80.275(e)(1), 80.275(e)(2), 80.305 and 80.310:

(i) The number in the refiner's or importer's possession at the beginning of the averaging period;

(ii) The number generated;

(iii) The number used;

(iv) If any were obtained from or transferred to other parties, for each other party its name, its EPA refiner or importer registration number, and the number obtained from, or transferred to, the other party;

(v) The number that expired at the end of the averaging period;

(vi) The number of allotments, by type, that were converted into credits under § 80.275(e);

(vii) The number in the refiner's or importer's possession that will carry over into the subsequent averaging period; and

(viii) Contracts or other commercial documents that establish each transfer of credits and allotments from the transferor to the transferee.

(3) The calculations used to determine the applicable refiner baseline under § 80.250 or § 80.295.

(4) The calculations used to determine compliance with the applicable sulfur average standards of § 80.195, § 80.216, § 80.240, or § 80.270.

(5) The calculations used to determine the number of credits or allotments generated under § 80.305, § 80.310 or § 80.275.

(6) The calculations used to determine any applicable adjusted cap standard under § 80.195(d).

(7) A copy of all reports submitted to EPA under § 80.370.

(8) In the case of parties who process transmix, records of any sampling and testing required under § 80.213.

(c) *Additional records importers must keep.* Any importer shall keep records that identify and verify the source of each batch of certified Sulfur-FRGAS and non-certified Sulfur-FRGAS imported and demonstrate compliance with the requirements for importers under § 80.410(o).

(d) *Length of time records must be kept.* The records required in this section shall be kept for five years from the date they were created; except that:

(1) *Transfers of credits and allotments.* Records relating to credit and allotment transfers, except as provided in paragraph (d)(2) of this section, shall be kept by the transferor for 5 years from the date the credits or allotments are transferred, and shall be kept by the transferee for 5 years from the date the credits or allotments were transferred, used or terminated, whichever is later.

(2) Early credits and allotments. (i) Where the party generating the credits or allotments does not transfer the credits or allotments, records must be kept for 5 years from the date of creation, use, or termination, whichever is later.

(ii) Where early credits or allotments are transferred, records relating to such credits or allotments shall be kept by both parties for 5 years from the date the credits or allotments were

transferred, used, or terminated, whichever is later.

(e) *Make records available to EPA.* On request by EPA the records required in paragraphs (a), (b) and (c) of this section shall be provided to the Administrator's authorized representative. For records that are electronically generated or maintained the equipment and software necessary to read the records shall be made available, or if requested by EPA, electronic records shall be converted to paper documents which shall be provided to the Administrator's authorized representative.

[65 FR 6823, Feb. 10, 2000, as amended at 67 FR 40184, June 12, 2002; 71 FR 31964, June 2, 2006]

§ 80.370 What are the sulfur reporting requirements?

Beginning with the 2004 averaging period, or the first year credits or allotments are generated under § 80.275 or § 80.305, whichever is earlier, and continuing for each averaging period thereafter, any refiner or importer shall submit to EPA annual reports that contain the information required in this section, and such other information as EPA may require.

(a) *Refiner and importer annual reports.* Any refiner, for each of its refineries, and any importer for the gasoline it imports, shall submit a report for each calendar year averaging period that includes the following information, and in the case of a refiner or importer producing or importing both GPA gasoline and other gasoline, the information shall be separately reported:

(1) The EPA importer, or refiner and refinery facility registration numbers;

(2) The applicable baseline, average standard, and adjusted cap standard as follows:

(i) For the years 2000 through 2003, the applicable baseline under § 80.250 or § 80.295.

(ii) For the 2004 averaging period and subsequent averaging periods:

(A) All applicable average standards under § 80.195, § 80.216, § 80.240 or § 80.270;

(B) All applicable adjusted cap standards under § 80.195(d), with the 2005 report identifying both the 2004 and 2005 applicable adjusted cap standards;

(3) The total volume of gasoline produced or imported;

(4) The annual average sulfur level of the gasoline produced or imported;

(5) The annual average sulfur level after inclusion of any credits and allotments;

(6) Information, separately provided, for credits and allotments, and separately by year of creation, as follows:

(i) The number of credits and allotments at the beginning of the averaging period;

(ii) The number of credits and allotments generated;

(iii) The number of credits and allotments used;

(iv) If any credits or allotments were obtained from or transferred to other parties, for each other party its name and EPA refiner or importer registration number, and the number of credits or allotments obtained from or transferred to the other party;

(v) The number of credits and allotments that expired at the end of the averaging period;

(vi) The number of credits and allotments that will carry over into the subsequent averaging period; and

(vii) The number of each type of allotments converted to credits;

(7) For each batch of gasoline produced or imported during the averaging period:

(i) The batch number assigned under § 80.65(d)(3) and the appropriate designation under § 80.365; except that if composite samples of conventional gasoline representing multiple batches produced subsequent to December 31, 2003, are tested under § 80.101(i)(2) for anti-dumping compliance purposes, for purposes of this subpart a separate batch number must be assigned to each batch using the batch numbering procedures under § 80.65(d)(3);

(ii) The date the batch was produced;

(iii) The volume of the batch; and

(iv) The sulfur content of the batch as determined under § 80.330; and

(v) For any batch of small refiner gasoline produced by any refinery with an adjustment of its per-gallon cap standard under § 80.271(a), the number of sulfur credits or allotments required under paragraph (d)(1) of this section, the number of credits or allotments

used, and the source(s) of these credits or allotments.

(8) When submitting reports under this paragraph (a), any importer shall exclude certified Sulfur-FRGAS.

(b) *Additional reporting requirements for importers.* Any importer shall report the following information for Sulfur-FRGAS imported during the averaging period:

(1) The EPA refiner and refinery registration numbers of each foreign refiner and refinery where the certified Sulfur-FRGAS was produced; and

(2) The total gallons of certified Sulfur-FRGAS and non-certified Sulfur-FRGAS imported from each foreign refiner and refinery.

(c) *Corporate pool average reports.* (1) Annual reports filed under this section for the 2004 and 2005 averaging periods must include the party's corporate pool average as determined under § 80.205.

(2) If the party submitting the annual report under paragraph (c)(1) of this section is a refiner with more than one refinery or is a refiner who also imports gasoline, then for the purposes of this paragraph, the party shall report the information required for individual refineries and for importers under paragraph (a) of this section, also in the aggregate for all the gasoline produced and imported during the calendar year.

(3) Refiners and importers exempted from corporate pool standards under § 80.216 or § 80.240 are exempt from reporting the information required under paragraphs (c)(1) and (c)(2) of this section.

(4) A parent company must identify in the corporate pool average reports required under paragraph (c)(1) of this section any refinery facilities owned by the parent company, any subsidiaries wholly-owned by the parent company, and any refinery facilities of the parent company's wholly-owned subsidiaries, except as provided in paragraph (c)(5) of this section.

(5) Where the wholly-owned subsidiaries of a parent company comply with the corporate pool average standards individually pursuant to § 80.195(c)(6)(ii):

(i) The corporate pool average reports required under paragraph (c)(1) of this section must be submitted by each wholly-owned subsidiary of the parent company;

(ii) Each wholly-owned subsidiary of the parent company must identify in the corporate pool average reports required under paragraph (c)(1) of this section the subsidiary's parent company and any refinery facilities of the subsidiary; and

(iii) The parent company must submit the corporate pool average reports required under paragraph (c)(1) of this section for any refinery facilities owned by the parent company which are not the refinery facilities of the parent company's wholly-owned subsidiaries.

(d) *Report submission.* Any annual report required under this section shall be:

(1) Signed and certified as meeting all of the applicable requirements of this subpart by the owner or a responsible corporate officer of the refiner or importer; and

(2) Submitted to EPA no later than the last day of February for the prior calendar year averaging period.

(f) *Attest reports.* Attest reports for refiner and importer attest engagements required under § 80.415 shall be submitted to the Administrator by May 31 of each year for the prior calendar year averaging period.

[65 FR 6823, Feb. 10, 2000, as amended at 67 FR 40184, June 12, 2002]

§§ 80.371–80.373 [Reserved]

EXEMPTIONS

§ 80.374 What if a refiner or importer is unable to produce gasoline conforming to the requirements of this subpart?

In appropriate extreme and unusual circumstances (*e.g.*, natural disaster or Act of God) which are clearly outside the control of the refiner or importer and which could not have been avoided by the exercise of prudence, diligence, and due care, EPA may permit a refiner or importer, for a brief period, to distribute gasoline which does not meet the requirements of this subpart provided the refiner or importer meets all the criteria, requirements and conditions contained in § 80.73 (a) through (e).

§ 80.375 What requirements apply to California gasoline?

(a) *Definition.* For purposes of this subpart *California gasoline* means any gasoline designated by the refiner as for use in California.

(b) *California gasoline exemption.* California gasoline that complies with all the requirements of this section is exempt from all other provisions of this subpart.

(c) *Requirements for California gasoline.* The requirements are:

(1) Each batch of California gasoline must be designated as such by its refiner or importer;

(2) Designated California gasoline must be kept segregated from gasoline that is not California gasoline, at all points in the distribution system;

(3) Designated California gasoline must ultimately be used in the State of California and not used elsewhere;

(4) In the case of California gasoline produced outside the State of California, the transferors and transferees must meet the product transfer document requirements under § 80.81(g); and

(5) Gasoline that is ultimately used in any part of the United States outside of the State of California must comply with the standards and requirements of this subpart, regardless of any designation as California gasoline.

(d) *Use of California test methods and off site sampling procedures.* In the case of any gasoline that is not California gasoline and that is either produced at a refinery located in the State of California or is imported from outside the United States into the State of California, the refiner or importer may, with regard to such gasoline:

(1) Use the sampling and testing methods approved in Title 13 of the California Code of Regulations instead of the sampling and testing methods required under § 80.330; and

(2) Determine the sulfur content of gasoline at off site tankage as permitted in § 80.81(h)(2).

§ 80.380 What are the requirements for obtaining an exemption for gasoline used for research, development or testing purposes?

Any person may request an exemption from the provisions of this subpart for gasoline used for research, development or testing (''R&D'') purposes by submitting to EPA an application that includes all the information listed in paragraph (b) of this section.

(a) *Criteria for an R&D exemption.* For an R&D exemption to be granted, the proposed test program must:

(1) Have a purpose that constitutes an appropriate basis for exemption;

(2) Necessitate the granting of an exemption;

(3) Be reasonable in scope; and

(4) Have a degree of control consistent with the purpose of the program and EPA's monitoring requirements.

(b) *Information required to be submitted.* To demonstrate each of the four elements in paragraphs (a)(1) through (4) of this section, the application required under this section must include the following information:

(1) A statement of the purpose of the program demonstrating that the program has an appropriate R&D purpose.

(2) An explanation of why the stated purpose of the program cannot be achieved in a practicable manner without performing one or more of the prohibited acts under § 80.385.

(3) To demonstrate the reasonableness of the scope of the program:

(i) An estimate of the program's beginning and ending dates;

(ii) An estimate of the maximum number of vehicles and engines involved in the program, and the number of miles and engine hours that will be accumulated on each;

(iii) The sulfur content of the gasoline expected to be used in the program; and

(iv) The quantity of gasoline that exceeds the applicable sulfur standard that is expected to be used in the program.

(4) With regard to control, a demonstration that the program affords EPA a monitoring capability, including at a minimum:

(i) A description of the technical and operational aspects of the program;

(ii) The site(s) of the program (including street address, city, county, State, and ZIP code);

(iii) The manner in which information on vehicles and engines used in the program will be recorded and made available to EPA;

(iv) The manner in which results of the program will be recorded and made available to EPA;

(v) The manner in which information on the gasoline used in the program (including quantity, sulfur content, name, address, telephone number and contact person of the supplier, and the date received from the supplier), will be recorded and made available to EPA;

(vi) The manner in which distribution pumps will be labeled to insure proper use of the gasoline where appropriate;

(vii) The name, address, telephone number and title of the person(s) in the organization requesting an exemption from whom further information on the application may be obtained; and

(viii) The name, address, telephone number and title of the person(s) in the organization requesting an exemption who is responsible for recording and making available the information specified in paragraphs (b)(4)(iii), (iv) and (v) of this section, and the location in which such information will be maintained.

(c) *Additional requirements.* (1) The product transfer documents associated with R&D gasoline must identify the gasoline as such, and must state that the gasoline is to be used only for research, development, or testing purposes.

(2) The R&D gasoline must be designated by the refiner or importer as exempt R&D gasoline.

(3) The R&D gasoline must be kept segregated from non-exempt gasoline at all points in the distribution system of the gasoline.

(4) The R&D gasoline must not be sold, distributed, offered for sale or distribution, dispensed, supplied, offered for supply, transported to or from, or stored by a gasoline retail outlet, or by a wholesale purchaser-consumer facility, unless the wholesale purchaser-consumer facility is associated with the R&D program that uses the gasoline.

(d) *Memorandum of exemption.* The Administrator will grant an R&D exemption upon a demonstration that the requirements of this section have been met. The R&D exemption will be granted in the form of a memorandum of exemption signed by the applicant and the Administrator (or delegate), which may include such terms and conditions as the Administrator determines necessary to monitor the exemption and to carry out the purposes of this section, including restoration of motor vehicle emissions control systems. Any violation of such a term or condition of the exemption or any requirement under this section will cause the exemption to be void ab initio.

(e) *Effects of exemption.* Gasoline that is subject to an R&D exemption under this section is exempt from other provisions of this subpart provided that the gasoline is used in a manner that complies with the memorandum of exemption granted under paragraph (d) of this section.

§ 80.382 What requirements apply to gasoline for use in American Samoa, Guam and the Commonwealth of the Northern Mariana Islands?

The gasoline sulfur standards of §§ 80.195 and 80.240(a) do not apply to gasoline that is produced, imported, sold, offered for sale, supplied, offered for supply, stored, dispensed, or transported for use in the Territories of Guam, American Samoa or the Commonwealth of the Northern Mariana Islands, provided that such gasoline is:

(a) Designated by the refiner or importer as high sulfur gasoline only for use in Guam, American Samoa, or the Commonwealth of the Northern Mariana Islands;

(b) Used only in Guam, American Samoa, or the Commonwealth of the Northern Mariana Islands;

(c) Accompanied by documentation that complies with the product transfer document requirements of § 80.365; and

(d) Segregated from non-exempt high sulfur fuel at all points in the distribution system from the point the fuel is designated as exempt fuel only for use in Guam, American Samoa, or the Commonwealth of the Northern Mariana Islands, while the exempt fuel is in the United States but outside these Territories.

[71 FR 78093, Dec. 28, 2006]

VIOLATION PROVISIONS

§ 80.385 What acts are prohibited under the gasoline sulfur program?

No person shall:

(a) *Averaging violation.* Produce or import gasoline that does not comply with the applicable sulfur average standard under § 80.195, § 80.216 or § 80.240.

(b) Cap standard violation. Produce, import, sell, offer for sale, dispense, supply, offer for supply, store or transport gasoline that does not comply with the applicable sulfur cap standard under § 80.195, § 80.216, § 80.210, § 80.220, § 80.240, or does not comply with an adjusted cap standard approved for a small refiner under § 80.271.

(c) *Causing an averaging, cap standard, or geographic phase-in area (GPA) use violation.* Cause another person to commit an act in violation of paragraph (a), (b), or (f) of this section.

(d) *Causing violating gasoline to be in the distribution system.* Cause gasoline to be in the distribution system which does not comply with an applicable sulfur cap standard under § 80.195, § 80.210, § 80.216, § 80.220 or § 80.240; a sulfur average standard under § 80.195, § 80.216 or § 80.240; or a GPA use prohibition under § 80.219(c).

(e) *Denatured ethanol violation.* Blend into gasoline denatured ethanol with a sulfur content higher than 30 ppm.

(f) *GPA use violation.* Produce, import, sell, offer for sale, dispense, supply, offer for supply, store or transport gasoline that does not comply with a GPA use prohibition under § 80.219(c).

(g) Failure to use sufficient sulfur credits or allotments to offset a per-gallon cap adjustment. For a small refiner that has an approved adjustment of its per-gallon cap sulfur standard for a refinery under § 80.271, to fail to obtain (or generate) and use the required number of sulfur credits or allotments to offset the revised per-gallon cap sulfur standard under § 80.217(d).

[65 FR 6823, Feb. 10, 2000, as amended at 67 FR 40184, June 12, 2002]

§ 80.390 What evidence may be used to determine compliance with the prohibitions and requirements of this subpart and liability for violations of this subpart?

(a) Compliance with the sulfur standards of this subpart shall be determined based on the sulfur level of the gasoline, measured using the methodologies specified in §§ 80.330(b) and 80.46(a). Any evidence or information, including the exclusive use of such evidence or information, may be used to establish the sulfur level of gasoline if the evidence or information is relevant to whether the sulfur level of gasoline would have been in compliance with the standards if the appropriate sampling and testing methodology had been correctly performed. Such evidence may be obtained from any source or location and may include, but is not limited to, test results using methods other than those specified in §§ 80.330(b) and 80.46(a), business records, and commercial documents.

(b) Determinations of compliance with the requirements of this subpart other than the sulfur standards, and determinations of liability for any violation of this subpart, may be based on information obtained from any source or location. Such information may include, but is not limited to, business records and commercial documents.

§ 80.395 Who is liable for violations under the gasoline sulfur program?

(a) *Persons liable for violations of prohibited acts*—(1) *Averaging violation.* Any refiner or importer who violates § 80.385(a) is liable for the violation.

(2) *Causing an averaging violation.* Any refiner, importer, distributor, reseller, carrier, retailer, wholesale purchaser-consumer, or oxygenate blender who causes another party to violate § 80.385(a), is liable for a violation of § 80.385(c).

(3) *Cap standard violation.* Any refiner, importer, distributor, reseller, carrier, retailer, wholesale purchaser-consumer, or oxygenate blender who owned, leased, operated, controlled or supervised a facility where a violation of § 80.385 (b) occurred, is deemed in violation of § 80.385(b).

(4) *Causing a cap standard violation.* Any refiner, importer, distributor, reseller, carrier, retailer, wholesale purchaser-consumer, or oxygenate blender who produced, imported, sold, offered for sale, dispensed, supplied, offered for supply, stored, transported, or caused the transportation or storage of gasoline that violates § 80.385(b), is deemed in violation of § 80.385(c).

(5) GPA use violation. Any refiner, importer, distributor, reseller, carrier, retailer, wholesale purchaser-consumer, or oxygenate blender who owned, leased, operated, controlled or supervised a facility where a violation of § 80.385(f) occurred, is deemed in violation of § 80.385(f).

(6) Causing a GPA use violation. Any refiner, importer, distributor, reseller, carrier, retailer, wholesale purchaser-consumer, or oxygenate blender who produced, imported, sold, offered for sale, dispensed, supplied, offered for supply, stored, transported, or caused the transportation or storage of gasoline that violates § 80.385(f), is deemed in violation of § 80.385(c).

(7) *Branded refiner/importer liability.* Any refiner or importer whose corporate, trade, or brand name, or whose marketing subsidiary's corporate, trade, or brand name appeared at a facility where a violation of § 80.385(b) or (f) occurred, is deemed in violation of § 80.385(b) or (f), as applicable.

(8) *Causing violating gasoline to be in the distribution system.* Any refiner, importer, distributor, reseller, carrier, or oxygenate blender, who owned, leased, operated, controlled or supervised a facility from which gasoline was released into the distribution system which does not comply with an applicable sulfur cap standard, a sulfur averaging standard, or a GPA use prohibition, is deemed in violation of § 80.385(d).

(9) *Carrier causation.* In order for a carrier to be liable under paragraph (a)(2), (4), (6), or (8) of this section, EPA must demonstrate, by reasonably specific showing by direct or circumstantial evidence, that the carrier caused the violation.

(10) *Denatured ethanol violation.* Any oxygenate blender who violates § 80.385(e) is liable for the violation.

(11) *Parent corporation liability.* Any parent corporation is liable for any violations of this subpart that are committed by any of its wholly-owned subsidiaries.

(12) Joint venture and joint owner liability. Each partner to a joint venture, or each owner of a facility owned by two or more owners, is jointly and severally liable for any violation of this subpart that occurs at the joint venture facility or facility owned by the joint owners, or is committed by the joint venture operation or any of the joint owners of the facility.

(13) Failure to use credits violation. Any small refiner that has an approved adjustment of its per-gallon cap under § 80.271 and that does not obtain (or generate) and use the required number of sulfur credits or allotments under § 80.271(d) by the time it submits its annual report under § 80.370 is deemed in violation of § 80.385(g).

(b) *Persons liable for failure to meet other provisions of this subpart.* (1) Any refiner, importer, distributor, reseller, carrier, wholesale purchaser-consumer, retailer, or oxygenate blender who fails to meet a provision of this subpart not addressed in paragraph (a) of this section is liable for a violation of that provision.

(2) Any refiner, importer, distributor, reseller, carrier, wholesale purchaser-consumer, retailer, or oxygenate blender who caused another person to fail to meet a requirement of this subpart not addressed in paragraph (a) of this section, is liable for causing a violation of that provision.

[65 FR 6823, Feb. 10, 2000, as amended at 67 FR 40184, June 12, 2002]

§ 80.400 What defenses apply to persons deemed liable for a violation of a prohibited act?

(a) Any person deemed liable for a violation of a prohibition under § 80.395 (a)(3) through (8), will not be deemed in violation if the person demonstrates that:

(1) The violation was not caused by the person or the person's employee or agent; and

(2) The person conducted a quality assurance sampling and testing program, as described in paragraph (d) of this section. A carrier may rely on the quality assurance program carried out by another party, including the party

who owns the gasoline in question, provided that the quality assurance program is carried out properly. Retailers and wholesale purchaser-consumers are not required to conduct quality assurance programs.

(b) In the case of a violation found at a facility operating under the corporate, trade or brand name of a refiner or importer, or a refiner's or importer's marketing subsidiary, the refiner or importer must show, in addition to the defense elements required under paragraphs (a)(1) and (2) of this section, that the violation was caused by:

(1) An act in violation of law (other than the Clean Air Act or this part 80), or an act of sabotage or vandalism;

(2) The action of any refiner, importer, retailer, distributor, reseller, oxygenate blender, carrier, retailer or wholesale purchaser-consumer in violation of a contractual agreement between the branded refiner or importer and the person designed to prevent such action, and despite periodic sampling and testing by the branded refiner or importer to ensure compliance with such contractual obligation; or

(3) The action of any carrier or other distributor not subject to a contract with the refiner or importer, but engaged for transportation of gasoline, despite specifications or inspections of procedures and equipment which are reasonably calculated to prevent such action.

(c) Under paragraph (a) of this section for any person to show that a violation was not caused by that person, or under paragraph (b) of this section to show that a violation was caused by any of the specified actions, the person must demonstrate by reasonably specific showing, by direct or circumstantial evidence, that the violation was caused or must have been caused by another person and that the person asserting the defense did not contribute to that other person's causation.

(d) *Quality assurance and testing program.* To demonstrate an acceptable quality assurance and testing program under paragraph (a)(2) of this section, a person must present evidence of the following:

(1) A periodic sampling and testing program to ensure the gasoline the person sold, dispensed, supplied, stored, or transported, meets the applicable sulfur standard; and

(2) On each occasion when gasoline is found not in compliance with the applicable sulfur standard:

(i) The person immediately ceases selling, offering for sale, dispensing, supplying, offering for supply, storing or transporting the non-complying product; and

(ii) The person promptly remedies the violation and the factors that caused the violation (for example, by removing the non-complying product from the distribution system until the applicable standard is achieved and taking steps to prevent future violations of a similar nature from occurring).

(3) For any carrier who transports gasoline in a tank truck, the quality assurance program required under this paragraph (d) need not include periodic sampling and testing of gasoline in the tank truck, but in lieu of such tank truck sampling and testing, the carrier shall demonstrate evidence of an oversight program for monitoring compliance with the requirements of this subpart relating to the transport or storage of gasoline by tank truck, such as appropriate guidance to drivers regarding compliance with the applicable sulfur standard and product transfer document requirements, and the periodic review of records received in the ordinary course of business concerning gasoline quality and delivery.

§ 80.405 What penalties apply under this subpart?

(a) Any person liable for a violation under § 80.395 is subject to civil penalties as specified in section 205 of the Clean Air Act for every day of each such violation and the amount of economic benefit or savings resulting from each violation.

(b) Any person liable under § 80.395(a)(1) or (2) for a violation of the applicable sulfur averaging standard or causing another party to violate that standard during any averaging period, is subject to a separate day of violation for each and every day in the averaging period. Any person liable under

§ 80.395(b) for a failure to fulfill any requirement for credit or allotment generation, transfer, use, banking, or deficit correction, is subject to a separate day of violation for each and every day in the averaging period in which invalid credits or allotments are generated or used.

(c)(1) Any person liable under § 80.395(a)(3), (4), (5), or (6) for a violation of an applicable sulfur per gallon cap standard under § 80.195, § 80.210, § 80.216, § 80.220 or § 80.240, a GPA use prohibition under § 80.219(c), or of causing another party to violate a cap standard or a GPA use prohibition, is subject to a separate day of violation for each and every day the non-complying gasoline remains any place in the gasoline distribution system.

(2) Any person liable under § 80.395(a)(8) for causing gasoline to be in the distribution system which does not comply with an applicable sulfur cap standard, a sulfur averaging standard, or a GPA use prohibition, is subject to a separate day of violation for each and every day that the non-complying gasoline remains any place in the gasoline distribution system.

(3) For purposes of paragraph (c) of this section, the length of time the gasoline in question remained in the gasoline distribution system is deemed to be twenty-five days, unless a person subject to liability or EPA demonstrates by reasonably specific showings, by direct or circumstantial evidence, that the non-complying gasoline remained in the gasoline distribution system for fewer than or more than twenty-five days.

(d) Any person liable under § 80.395(b) for failure to meet, or causing a failure to meet, a provision of this subpart is liable for a separate day of violation for each and every day such provision remains unfulfilled.

(e) Any person liable under § 80.395(a)(13) for failing to obtain (or generate) and use the total required number of sulfur credits or allotments under § 80.271(d) for a calendar year is subject to a separate day of violation for each day until the required number of credits or allotments is used.

[65 FR 6823, Feb. 10, 2000, as amended at 67 FR 40185, June 12, 2002]

PROVISIONS FOR FOREIGN REFINERS WITH INDIVIDUAL SULFUR BASELINES

§ 80.410 What are the additional requirements for gasoline produced at foreign refineries having individual small refiner sulfur baselines, foreign refineries granted temporary relief under § 80.270, or baselines for generating credits during 2000 through 2003?

(a) *Definitions.* (1) A foreign refinery is a refinery that is located outside the United States, the Commonwealth of Puerto Rico, the Virgin Islands, Guam, American Samoa, and the Commonwealth of the Northern Mariana Islands (collectively referred to in this section as ''the United States'').

(2) A foreign refiner is a person who meets the definition of refiner under § 80.2(i) for a foreign refinery.

(3) A small foreign refiner is a refiner that meets the definition of a small refiner under § 80.225.

(4) ''Sulfur-FRGAS'' means gasoline produced at a foreign refinery that has been assigned an individual refinery sulfur baseline under §§ 80.250 or 80.295, or has been granted temporary relief under § 80.270, and that is imported into the United States.

(5) ''Non-Sulfur-FRGAS'' means gasoline that is produced at a foreign refinery that has not been assigned an individual refinery sulfur baseline, gasoline produced at a foreign refinery with an individual refinery sulfur baseline that is not imported into the United States, and gasoline produced at a foreign refinery with an individual sulfur baseline during a year when the foreign refiner has opted to not participate in the Sulfur-FRGAS program under paragraph (c)(3) of this section.

(6) ''Certified Sulfur-FRGAS'' means Sulfur-FRGAS the foreign refiner intends to include in the foreign refinery's sulfur compliance calculations under § 80.205 pursuant to § 80.240 or § 80.270 or credit calculations under § 80.305 or § 80.310 and allotment calculations under § 80.275(a), and does include in these compliance calculations when reported to EPA.

(7) ''Non-Certified Sulfur-FRGAS'' means Sulfur-FRGAS that is not Certified Sulfur-FRGAS.

(b) *Baseline establishment.* Any foreign refiner who does not have an approved

refinery baseline under § 80.94 may submit a petition to the Administrator for an individual refinery sulfur baseline pursuant to §§ 80.245 and 80.250, a baseline for generating credits or allotments under §§ 80.290 and 80.295, or a baseline for temporary refinery relief under §§ 80.270 and 80.295.

(1) The refiner shall follow the procedures specified in §§ 80.91 through 80.93 to establish the volume and sulfur content of gasoline that was produced at the foreign refinery and imported into the United States during 1997 and 1998 for purposes of establishing baselines under § 80.250 or § 80.295.

(2) In making determinations for foreign refinery baselines EPA will consider all information supplied by a foreign refiner, and in addition may rely on any and all appropriate assumptions necessary to make such determinations.

(3) Where a foreign refiner submits a petition that is incomplete or inadequate to establish an accurate baseline, and the refiner fails to cure this defect after a request for more information, EPA will not assign an individual refinery sulfur baseline.

(c) *General requirements for foreign refiners with individual refinery sulfur baselines.* A foreign refiner of a refinery that has been assigned an individual sulfur baseline under § 80.250 or § 80.295 must designate all gasoline produced at the foreign refinery that is exported to the United States as either Certified Sulfur-FRGAS or as Non-Certified Sulfur-FRGAS, except as provided in paragraph (c)(3) of this section.

(1) In the case of Certified Sulfur-FRGAS, the foreign refiner must meet all provisions that apply to refiners under this subpart H.

(2) In the case of Non-Certified Sulfur-FRGAS, the foreign refiner shall meet all the following provisions, except the foreign refiner shall substitute the name Non-Certified Sulfur-FRGAS for the names ''reformulated gasoline'' or ''RBOB'' wherever they appear in the following provisions:

(i) The designation requirements in this section;

(ii) The recordkeeping requirements under § 80.365;

(iii) The reporting requirements in § 80.370 and this section;

(iv) The product transfer document requirements in this section;

(v) The prohibitions in this section and § 80.385; and

(vi) The independent audit requirements under § 80.415, paragraph (h) of this section, §§ 80.125 through 80.127, § 80.128(a),(b),(c),(g) through (i), and § 80.130.

(3)(i) Any foreign refiner that generates sulfur credits under § 80.305 during the period 2000 through 2003, or allotments under § 80.275(a) during 2003, and any small refiner generating credits under § 80.310, shall designate all Sulfur-FRGAS as Certified Sulfur-FRGAS for any year that such credits are generated.

(ii) Any foreign refiner that has been assigned an individual sulfur baseline for a foreign refinery under § 80.250 or § 80.295 may elect to classify no gasoline imported into the United States as Sulfur-FRGAS, provided the foreign refiner notifies EPA of the election no later than November 1 of the prior calendar year.

(iii) An election under paragraph (c)(3)(ii) of this section shall:

(A) Apply to an entire calendar year averaging period, and apply to all gasoline produced during the calendar year at the foreign refinery that is used in the United States; and

(B) Remain in effect for each succeeding calendar year averaging period, unless and until the foreign refiner notifies EPA of a termination of the election. The change in election shall take effect at the beginning of the next calendar year.

(d) *Designation, product transfer documents, and foreign refiner certification.* (1) Any foreign refiner of a foreign refinery that has been assigned an individual sulfur baseline must designate each batch of Sulfur-FRGAS as such at the time the gasoline is produced, unless the refinery has elected to classify no gasoline exported to the United States as Sulfur-FRGAS under paragraph (c)(3)(ii) of this section.

(2) On each occasion when any person transfers custody or title to any Sulfur-FRGAS prior to its being imported into the United States, it must include the following information as part of the product transfer document information in this section:

(i) Identification of the gasoline as Certified Sulfur-FRGAS or as Non-Certified Sulfur-FRGAS; and

(ii) The name and EPA refinery registration number of the refinery where the Sulfur-FRGAS was produced.

(3) On each occasion when Sulfur-FRGAS is loaded onto a vessel or other transportation mode for transport to the United States, the foreign refiner shall prepare a certification for each batch of the Sulfur-FRGAS that meets the following requirements:

(i) The certification shall include the report of the independent third party under paragraph (f) of this section, and the following additional information:

(A) The name and EPA registration number of the refinery that produced the Sulfur-FRGAS;

(B) The identification of the gasoline as Certified Sulfur-FRGAS or Non-Certified Sulfur-FRGAS;

(C) The volume of Sulfur-FRGAS being transported, in gallons;

(D) In the case of Certified Sulfur-FRGAS:

(*1*) The sulfur content as determined under paragraph (f) of this section; and

(*2*) A declaration that the Sulfur-FRGAS is being included in the compliance calculations under § 80.205 or credit calculations under § 80.305 or allotments under § 80.275(a) for the refinery that produced the Sulfur-FRGAS.

(ii) The certification shall be made part of the product transfer documents for the Sulfur-FRGAS. Prior to 2004, the information required under paragraph (d)(3)(i)(D)(*1*) of this section may be omitted from the product transfer documents that accompany the gasoline, provided that such information is provided to the United States importer prior to collection of the representative sample required under paragraph (o)(3)(ii)(A) of this section.

(e) *Transfers of Sulfur-FRGAS to non-United States markets.* The foreign refiner is responsible to ensure that all gasoline classified as Sulfur-FRGAS is imported into the United States. A foreign refiner may remove the Sulfur-FRGAS classification, and the gasoline need not be imported into the United States, but only if:

(1)(i) The foreign refiner excludes:

(A) The volume of gasoline from the refinery's compliance calculations under § 80.205; and

(B) In the case of Certified Sulfur-FRGAS, the volume and sulfur content of the gasoline from the compliance calculations under § 80.205 or credit calculations under § 80.305.

(ii) The exclusions under paragraph (e)(1)(i) of this section shall be on the basis of the sulfur content and volumes determined under paragraph (f) of this section; and

(2) The foreign refiner obtains sufficient evidence in the form of documentation that the gasoline was not imported into the United States.

(f) *Load port independent sampling, testing and refinery identification.* (1) On each occasion Sulfur-FRGAS is loaded onto a vessel for transport to the United States a foreign refiner shall have an independent third party:

(i) Inspect the vessel prior to loading and determine the volume of any tank bottoms;

(ii) Determine the volume of Sulfur-FRGAS loaded onto the vessel (exclusive of any tank bottoms present before vessel loading);

(iii) Obtain the EPA-assigned registration number of the foreign refinery;

(iv) Determine the name and country of registration of the vessel used to transport the Sulfur-FRGAS to the United States; and

(v) Determine the date and time the vessel departs the port serving the foreign refinery.

(2) On each occasion Certified Sulfur-FRGAS is loaded onto a vessel for transport to the United States a foreign refiner shall have an independent third party:

(i) Collect a representative sample of the Certified Sulfur-FRGAS from each vessel compartment subsequent to loading on the vessel and prior to departure of the vessel from the port serving the foreign refinery;

(ii) Prepare a volume-weighted vessel composite sample from the compartment samples, and determine the value for sulfur in accordance with the methodology and requirements specified in § 80.330, by:

(A) The third party analyzing the sample; or

(B) The third party observing the foreign refiner analyze the sample;

(iii) Review original documents that reflect movement and storage of the certified Sulfur-FRGAS from the refinery to the load port, and from this review determine:

(A) The refinery at which the Sulfur-FRGAS was produced; and

(B) That the Sulfur-FRGAS remained segregated from:

(*1*) Non-Sulfur-FRGAS and Non-Certified Sulfur-FRGAS; and

(*2*) Other Certified Sulfur-FRGAS produced at a different refinery.

(3) The independent third party shall submit a report:

(i) To the foreign refiner containing the information required under paragraphs (f)(1) and (2) of this section, to accompany the product transfer documents for the vessel; and

(ii) To the Administrator containing the information required under paragraphs (f)(1) and (2) of this section, within thirty days following the date of the independent third party's inspection. This report shall include a description of the method used to determine the identity of the refinery at which the gasoline was produced, assurance that the gasoline remained segregated as specified in paragraph (n)(1) of this section, and a description of the gasoline's movement and storage between production at the source refinery and vessel loading.

(4) The independent third party must:

(i) Be approved in advance by EPA, based on a demonstration of ability to perform the procedures required in this paragraph (f);

(ii) Be independent under the criteria specified in § 80.65(f)(2)(iii); and

(iii) Sign a commitment that contains the provisions specified in paragraph (i) of this section with regard to activities, facilities and documents relevant to compliance with the requirements of this paragraph (f).

(g) *Comparison of load port and port of entry testing.* (1)(i) Except as described in paragraph (g)(1)(ii) of this section, any foreign refiner and any United States importer of Certified Sulfur-FRGAS shall compare the results from the load port testing under paragraph (f) of this section, with the port of entry testing as reported under paragraph (o) of this section, for the volume of gasoline and the sulfur value.

(ii) Where a vessel transporting Certified Sulfur-FRGAS off loads this gasoline at more than one United States port of entry, and the conditions of paragraph (g)(2)(i) of this section are met at the first United States port of entry, the requirements of paragraph (g)(2) of this section do not apply at subsequent ports of entry if the United States importer obtains a certification from the vessel owner, that meets the requirements of paragraph (s) of this section, that the vessel has not loaded any gasoline or blendstock between the first United States port of entry and the subsequent port of entry.

(2)(i) The requirements of this paragraph (g)(2) apply if:

(A) The temperature-corrected volumes determined at the port of entry and at the load port differ by more than one percent; or

(B) The sulfur value determined at the port of entry is higher than the sulfur value determined at the load port, and the amount of this difference is greater than the reproducibility amount specified for the port of entry test result by the American Society of Testing and Materials (ASTM).

(ii) The United States importer and the foreign refiner shall treat the gasoline as Non-Certified Sulfur-FRGAS, and the foreign refiner shall exclude the gasoline volume and properties from its gasoline sulfur compliance calculations under § 80.205.

(h) *Attest requirements.* The following additional procedures shall be carried out by any foreign refiner of Sulfur-FRGAS as part of the applicable attest engagement for each foreign refinery under § 80.415:

(1) The inventory reconciliation analysis under § 80.128(b) and the tender analysis under § 80.128(c) shall include Non-Sulfur-FRGAS in addition to the gasoline types listed in § 80.128(b) and (c).

(2) Obtain separate listings of all tenders of Certified Sulfur-FRGAS, and of Non-Certified Sulfur-FRGAS. Agree the total volume of tenders from the listings to the gasoline inventory reconciliation analysis in § 80.128(b), and to the volumes determined by the third

party under paragraph (f)(1) of this section.

(3) For each tender under paragraph (h)(2) of this section where the gasoline is loaded onto a marine vessel, report as a finding the name and country of registration of each vessel, and the volumes of Sulfur-FRGAS loaded onto each vessel.

(4) Select a sample from the list of vessels identified in paragraph (h)(3) of this section used to transport Certified Sulfur-FRGAS, in accordance with the guidelines in § 80.127, and for each vessel selected perform the following:

(i) Obtain the report of the independent third party, under paragraph (f) of this section, and of the United States importer under paragraph (o) of this section.

(A) Agree the information in these reports with regard to vessel identification, gasoline volumes and test results.

(B) Identify, and report as a finding, each occasion the load port and port of entry parameter and volume results differ by more than the amounts allowed in paragraph (g) of this section, and determine whether the foreign refiner adjusted its refinery calculations as required in paragraph (g) of this section.

(ii) Obtain the documents used by the independent third party to determine transportation and storage of the Certified Sulfur-FRGAS from the refinery to the load port, under paragraph (f) of this section. Obtain tank activity records for any storage tank where the Certified Sulfur-FRGAS is stored, and pipeline activity records for any pipeline used to transport the Certified Sulfur-FRGAS, prior to being loaded onto the vessel. Use these records to determine whether the Certified Sulfur-FRGAS was produced at the refinery that is the subject of the attest engagement, and whether the Certified Sulfur-FRGAS was mixed with any Non-Certified Sulfur-FRGAS, Non-Sulfur-FRGAS, or any Certified Sulfur-FRGAS produced at a different refinery.

(5)(i) Select a sample from the list of vessels identified in paragraph (h)(3) of this section used to transport certified and Non-Certified Sulfur-FRGAS, in accordance with the guidelines in § 80.127, and for each vessel selected perform the following:

(ii) Obtain a commercial document of general circulation that lists vessel arrivals and departures, and that includes the port and date of departure of the vessel, and the port of entry and date of arrival of the vessel. Agree the vessel's departure and arrival locations and dates from the independent third party and United States importer reports to the information contained in the commercial document.

(6) Obtain separate listings of all tenders of Non-Sulfur-FRGAS, and perform the following:

(i) Agree the total volume of tenders from the listings to the gasoline inventory reconciliation analysis in § 80.128(b).

(ii) Obtain a separate listing of the tenders under paragraph (h)(6) of this section where the gasoline is loaded onto a marine vessel. Select a sample from this listing in accordance with the guidelines in § 80.127, and obtain a commercial document of general circulation that lists vessel arrivals and departures, and that includes the port and date of departure and the ports and dates where the gasoline was off loaded for the selected vessels. Determine and report as a finding the country where the gasoline was off loaded for each vessel selected.

(7) In order to complete the requirements of this paragraph (h) an auditor shall:

(i) Be independent of the foreign refiner;

(ii) Be licensed as a Certified Public Accountant in the United States and a citizen of the United States, or be approved in advance by EPA based on a demonstration of ability to perform the procedures required in §§ 80.125 through 80.130, § 80.415 and this paragraph (h); and

(iii) Sign a commitment that contains the provisions specified in paragraph (i) of this section with regard to activities and documents relevant to compliance with the requirements of §§ 80.125 through 80.130, § 80.415 and this paragraph (h).

(i) *Foreign refiner commitments.* Any foreign refiner shall commit to and comply with the provisions contained in this paragraph (i) as a condition to

being assigned an individual refinery sulfur baseline.

(1) Any United States Environmental Protection Agency inspector or auditor will be given full, complete and immediate access to conduct inspections and audits of the foreign refinery.

(i) Inspections and audits may be either announced in advance by EPA, or unannounced.

(ii) Access will be provided to any location where:

(A) Gasoline is produced;

(B) Documents related to refinery operations are kept;

(C) Gasoline or blendstock samples are tested or stored; and

(D) Sulfur-FRGAS is stored or transported between the foreign refinery and the United States, including storage tanks, vessels and pipelines.

(iii) Inspections and audits may be by EPA employees or contractors to EPA.

(iv) Any documents requested that are related to matters covered by inspections and audits will be provided to an EPA inspector or auditor on request.

(v) Inspections and audits by EPA may include review and copying of any documents related to:

(A) Refinery baseline establishment, including the volume and sulfur content, and transfers of title or custody, of any gasoline or blendstocks, whether Sulfur-FRGAS or Non-Sulfur-FRGAS, produced at the foreign refinery during the period January 1, 1997 through the date of the refinery baseline petition or through the date of the inspection or audit if a baseline petition has not been approved, and any work papers related to refinery baseline establishment;

(B) The volume and sulfur content of Sulfur-FRGAS;

(C) The proper classification of gasoline as being Sulfur-FRGAS or as not being Sulfur-FRGAS, or as Certified Sulfur-FRGAS or as Non-Certified Sulfur-FRGAS;

(D) Transfers of title or custody to Sulfur-FRGAS;

(E) Sampling and testing of Sulfur-FRGAS;

(F) Work performed and reports prepared by independent third parties and by independent auditors under the requirements of this section and § 80.415 including work papers; and

(G) Reports prepared for submission to EPA, and any work papers related to such reports.

(vi) Inspections and audits by EPA may include taking samples of gasoline or blendstock, and interviewing employees.

(vii) Any employee of the foreign refiner will be made available for interview by the EPA inspector or auditor, on request, within a reasonable time period.

(viii) English language translations of any documents will be provided to an EPA inspector or auditor, on request, within 10 working days.

(ix) English language interpreters will be provided to accompany EPA inspectors and auditors, on request.

(2) An agent for service of process located in the District of Columbia will be named, and service on this agent constitutes service on the foreign refiner or any employee of the foreign refiner for any action by EPA or otherwise by the United States related to the requirements of this subpart H.

(3) The forum for any civil or criminal enforcement action related to the provisions of this section for violations of the Clean Air Act or regulations promulgated thereunder shall be governed by the Clean Air Act, including the EPA administrative forum where allowed under the Clean Air Act.

(4) United States substantive and procedural laws shall apply to any civil or criminal enforcement action against the foreign refiner or any employee of the foreign refiner related to the provisions of this section.

(5) Submitting a petition for an individual refinery sulfur baseline, producing and exporting gasoline under an individual refinery sulfur baseline, and all other actions to comply with the requirements of this subpart H relating to the establishment and use of an individual refinery sulfur baseline constitute actions or activities that satisfy the provisions of 28 U.S.C. section 1605(a)(2), but solely with respect to actions instituted against the foreign refiner, its agents and employees in any court or other tribunal in the United States for conduct that violates the requirements applicable to the foreign

refiner under this subpart H, including conduct that violates Title 18 U.S.C. section 1001 and Clean Air Act section 113(c)(2).

(6) The foreign refiner, or its agents or employees, will not seek to detain or to impose civil or criminal remedies against EPA inspectors or auditors, whether EPA employees or EPA contractors, for actions performed within the scope of EPA employment related to the provisions of this section.

(7) The commitment required by this paragraph (i) shall be signed by the owner or president of the foreign refiner business.

(8) In any case where Sulfur-FRGAS produced at a foreign refinery is stored or transported by another company between the refinery and the vessel that transports the Sulfur-FRGAS to the United States, the foreign refiner shall obtain from each such other company a commitment that meets the requirements specified in paragraphs (i)(1) through (7) of this section, and these commitments shall be included in the foreign refiner's baseline petition.

(j) *Sovereign immunity*. By submitting a petition for an individual foreign refinery baseline under this section, or by producing and exporting gasoline to the United States under an individual refinery sulfur baseline under this section, the foreign refiner, its agents and employees, without exception, become subject to the full operation of the administrative and judicial enforcement powers and provisions of the United States without limitation based on sovereign immunity, with respect to actions instituted against the foreign refiner, its agents and employees in any court or other tribunal in the United States for conduct that violates the requirements applicable to the foreign refiner under this subpart H, including conduct that violates Title 18 U.S.C. section 1001 and Clean Air Act section 113(c)(2).

(k) *Bond posting*. Any foreign refiner shall meet the requirements of this paragraph (k) as a condition to being assigned an individual refinery sulfur baseline.

(1) The foreign refiner shall post a bond of the amount calculated using the following equation:

$$Bond = G \times \$\ 0.01$$

where:

Bond=amount of the bond in U. S. dollars.

G=the largest volume of gasoline produced at the foreign refinery and exported to the United States, in gallons, during a single calendar year among the most recent of the following calendar years, up to a maximum of five calendar years: the calendar year immediately preceding the date the baseline petition is submitted, the calendar year the baseline petition is submitted, and each succeeding calendar year.

(2) Bonds shall be posted by:

(i) Paying the amount of the bond to the Treasurer of the United States;

(ii) Obtaining a bond in the proper amount from a third party surety agent that is payable to satisfy United States administrative or judicial judgments against the foreign refiner, provided EPA agrees in advance as to the third party and the nature of the surety agreement; or

(iii) An alternative commitment that results in assets of an appropriate liquidity and value being readily available to the United States, provided EPA agrees in advance as to the alternative commitment.

(3) If the bond amount for a foreign refinery increases, the foreign refiner shall increase the bond to cover the shortfall within 90 days of the date the bond amount changes. If the bond amount decreases, the foreign refiner may reduce the amount of the bond beginning 90 days after the date the bond amount changes.

(4) Bonds posted under this paragraph (k) shall:

(i) Be used to satisfy any judicial judgment that results from an administrative or judicial enforcement action for conduct in violation of this subpart H, including where such conduct violates Title 18 U.S.C. section 1001 and Clean Air Act section 113(c)(2);

(ii) Be provided by a corporate surety that is listed in the United States Department of Treasury Circular 570 ''Companies Holding Certificates of Authority as Acceptable Sureties on Federal Bonds and Acceptable Reinsuring Companies'' (Available from the U.S. Department of the Treasury, Financial Management Service, Surety Bond Branch, 3700 East-West Highway, Room

6A04, Hyattsville, Md. 20782. Also available on the internet at *http://www.fms.treas.gov/c570/c570.html*); and

(iii) Include a commitment that the bond will remain in effect for at least five (5) years following the end of latest averaging period that the foreign refiner produces gasoline pursuant to the requirements of this Subpart H.

(5) On any occasion a foreign refiner bond is used to satisfy any judgment, the foreign refiner shall increase the bond to cover the amount used within 90 days of the date the bond is used.

(l) [Reserved]

(m) *English language reports.* Any report or other document submitted to EPA by any foreign refiner shall be in English language, or shall include an English language translation.

(n) *Prohibitions.* (1) No person may combine Certified Sulfur-FRGAS with any Non-Certified Sulfur-FRGAS or Non-Sulfur-FRGAS, and no person may combine Certified Sulfur-FRGAS with any Certified Sulfur-FRGAS produced at a different refinery, until the importer has met all the requirements of paragraph (o) of this section, except as provided in paragraph (e) of this section.

(2) No foreign refiner or other person may cause another person to commit an action prohibited in paragraph (n)(1) of this section, or that otherwise violates the requirements of this section.

(o) *United States importer requirements.* Any United States importer shall meet the following requirements:

(1) Each batch of imported gasoline shall be classified by the importer as being Sulfur-FRGAS or as Non-Sulfur-FRGAS, and each batch classified as Sulfur-FRGAS shall be further classified as Certified Sulfur-FRGAS or as Non-certified Sulfur-FRGAS.

(2) Gasoline shall be classified as Certified Sulfur-FRGAS or as Non-Certified Sulfur-FRGAS according to the designation by the foreign refiner if this designation is supported by product transfer documents prepared by the foreign refiner as required in paragraph (d) of this section, unless the gasoline is classified as Non-Certified Sulfur-FRGAS under paragraph (g) of this section.

(3) For each gasoline batch classified as Sulfur-FRGAS, any United States importer shall perform the following procedures:

(i) In the case of both Certified and Non-Certified Sulfur-FRGAS, have an independent third party:

(A) Determine the volume of gasoline in the vessel;

(B) Use the foreign refiner's Sulfur-FRGAS certification to determine the name and EPA-assigned registration number of the foreign refinery that produced the Sulfur-FRGAS;

(C) Determine the name and country of registration of the vessel used to transport the Sulfur-FRGAS to the United States; and

(D) Determine the date and time the vessel arrives at the United States port of entry.

(ii) In the case of Certified Sulfur-FRGAS, have an independent third party:

(A) Collect a representative sample from each vessel compartment subsequent to the vessel's arrival at the United States port of entry and prior to off loading any gasoline from the vessel;

(B) Prepare a volume-weighted vessel composite sample from the compartment samples; and

(C) Determine the sulfur value using the methodologies specified in § 80.330, by:

(*1*) The third party analyzing the sample; or

(*2*) The third party observing the importer analyze the sample.

(4) Any importer shall submit reports within thirty days following the date any vessel transporting Sulfur-FRGAS arrives at the United States port of entry:

(i) To the Administrator containing the information determined under paragraph (o)(3) of this section; and

(ii) To the foreign refiner containing the information determined under paragraph (o)(3)(ii) of this section.

(5)(i) Any United States importer shall meet the requirements specified in § 80.195 for any imported gasoline that is not classified as Certified Sulfur-FRGAS under paragraph (o)(2) of this section.

(p) *Truck imports of Certified Sulfur-FRGAS produced at a small refinery.* (1) Any refiner whose Certified Sulfur-FRGAS is transported into the United

States by truck may petition EPA to use alternative procedures to meet the following requirements:

(i) Certification under paragraph (d)(5) of this section;

(ii) Load port and port of entry sampling and testing under paragraphs (f) and (g) of this section;

(iii) Attest under paragraph (h) of this section; and

(iv) Importer testing under paragraph (o)(3) of this section.

(2) These alternative procedures must ensure Certified Sulfur-FRGAS remains segregated from Non-Certified Sulfur-FRGAS and from Non-Sulfur-FRGAS until it is imported into the United States. The petition will be evaluated based on whether it adequately addresses the following:

(i) Provisions for monitoring pipeline shipments, if applicable, from the refinery, that ensure segregation of Certified Sulfur-FRGAS from that refinery from all other gasoline;

(ii) Contracts with any terminals and/or pipelines that receive and/or transport Certified Sulfur-FRGAS, that prohibit the commingling of Certified Sulfur-FRGAS with any of the following:

(A) Other Certified Sulfur-FRGAS from other refineries;

(B) All Non-Certified Sulfur-FRGAS; or

(C) All Non-Sulfur-FRGAS;

(iii) Procedures for obtaining and reviewing truck loading records and United States import documents for Certified Sulfur-FRGAS to ensure that such gasoline is only loaded into trucks making deliveries to the United States; and

(iv) Attest procedures to be conducted annually by an independent third party that review loading records and import documents based on volume reconciliation, or other criteria, to confirm that all Certified Sulfur-FRGAS remains segregated throughout the distribution system and is only loaded into trucks for import into the United States.

(3) The petition required by this section must be submitted to EPA along with the application for small refiner status and individual refinery sulfur baseline and standards under § 80.240 and this section.

(q) *Withdrawal or suspension of a foreign refinery's baseline.* EPA may withdraw or suspend a baseline that has been assigned to a foreign refinery where:

(1) A foreign refiner fails to meet any requirement of this section;

(2) A foreign government fails to allow EPA inspections as provided in paragraph (i)(1) of this section;

(3) A foreign refiner asserts a claim of, or a right to claim, sovereign immunity in an action to enforce the requirements in this subpart H; or

(4) A foreign refiner fails to pay a civil or criminal penalty that is not satisfied using the foreign refiner bond specified in paragraph (k) of this section.

(r) *Early use of a foreign refinery baseline.* (1) A foreign refiner may begin using an individual refinery baseline before EPA has approved the baseline, provided that:

(i) A baseline petition has been submitted as required in paragraph (b) of this section;

(ii) EPA has made a provisional finding that the baseline petition is complete;

(iii) The foreign refiner has made the commitments required in paragraph (i) of this section;

(iv) The persons who will meet the independent third party and independent attest requirements for the foreign refinery have made the commitments required in paragraphs (f)(4)(iii) and (h)(7)(iii) of this section; and

(2) In any case where a foreign refiner uses an individual refinery baseline before final approval under paragraph (r)(1) of this section, and the foreign refinery baseline values that ultimately are approved by EPA are more stringent than the early baseline values used by the foreign refiner, the foreign refiner shall recalculate its compliance, ab initio, using the baseline values approved by EPA, and the foreign refiner shall be liable for any resulting violation of the conventional gasoline requirements.

(s) *Additional requirements for petitions, reports and certificates.* Any petition for a refinery baseline under

§ 80.250 or § 80.295, any alternative procedures under paragraph (p) of this section, and any certification under paragraph (d)(3) of this section shall be:

(1) Submitted in accordance with procedures specified by the Administrator, including use of any forms that may be specified by the Administrator; and

(2) Be signed by the president or owner of the foreign refiner company, or by that person's immediate designee, and shall contain the following declaration:

I hereby certify: (1) that I have actual authority to sign on behalf of and to bind [insert name of foreign refiner] with regard to all statements contained herein; (2) that I am aware that the information contained herein is being certified, or submitted to the United States Environmental Protection Agency, under the requirements of 40 CFR. Part 80, subpart H, and that the information is material for determining compliance under these regulations; and (3) that I have read and understand the information being certified or submitted, and this information is true, complete and correct to the best of my knowledge and belief after I have taken reasonable and appropriate steps to verify the accuracy thereof.

I affirm that I have read and understand the provisions of 40 CFR Part 80, subpart H, including 40 CFR 80.410 [insert name of foreign refiner]. Pursuant to Clean Air Act section 113(c) and Title 18, United States Code, section 1001, the penalty for furnishing false, incomplete or misleading information in this certification or submission is a fine of up to $10,000, and/or imprisonment for up to five years.

[65 FR 6823, Feb. 10, 2000, as amended at 66 FR 19309, Apr. 13, 2001; 67 FR 40185, June 12, 2002; 70 FR 74578, Dec. 15, 2005]

ATTEST ENGAGEMENTS

§ 80.415 What are the attest engagement requirements for gasoline sulfur compliance applicable to refiners and importers?

In addition to the requirements for attest engagements that apply to refiners and importers under §§ 80.125 through 80.130, and § 80.410, the attest engagements for importers and refiners must include the following procedures and requirements each year.

(a) *Baseline*. (1) Obtain the EPA sulfur baseline approval letter for the refinery to determine the refinery's applicable sulfur baseline and baseline volume under §§ 80.250 or 80.295.

(2) If the year being reviewed is 2004 through 2006 (2007 for refineries with small refiner status) and the refinery or importer produced or imported any GPA gasoline under § 80.216 or the refiner has approved status for a small refinery:

(i) Obtain the refinery's annual sulfur reports for 2000 through 2003; and

(ii) Determine whether the annual average sulfur level for any year credits were generated for 2000 through 2003 was less than the baseline level under paragraph (a)(1) of this section.

(iii) If the annual average sulfur level for any year in which credits were generated for 2000 through 2003 was less than the baseline level under paragraph (a)(1) of this section, for small refiners report as a finding the lowest annual sulfur level as the new baseline value for purposes of establishing the small refiner standards under § 80.240, and for GPA gasoline report as a finding the lowest annual sulfur level plus 30.00 ppm as the new sulfur level for purposes of credit generation under § 80.310, if lower than 150.00 ppm.

(iv) If the refinery being reviewed is a small refinery and the annual volume under paragraph (b)(2) of this section is greater than the baseline volume, calculate the applicable standard in accordance with § 80.240(c).

(3) Obtain a written representation from the company representative stating the sulfur value that the company used as its baseline and agree that number to paragraphs (a)(1) and (a)(2) of this section and to the reports to EPA.

(b) *EPA reports*. (1) Obtain and read a copy of the refinery's or importer's annual sulfur reports filed with EPA for the year.

(2) Agree the yearly volume of gasoline reported to EPA in the sulfur reports with the inventory reconciliation analysis under § 80.128.

(3) For the years 2004 through 2006, calculate the annual volume and average sulfur level for gasoline classified as GPA gasoline under §§ 80.216 and 80.219, and calculate the annual volume and average sulfur level for gasoline not classified as GPA gasoline, and agree these values with the values reported to EPA.

(4) Except as provided in paragraph (b)(3) of this section, calculate the annual average sulfur level for all gasoline and agree that value with the value reported to EPA.

(5) Obtain and read a copy of the refinery's or importer's sulfur credit report.

(6) Agree the information in the refinery's or importer's batch reports filed with EPA under §§ 80.75 and 80.105, and any laboratory test results, with the information contained in the annual sulfur report required under § 80.370.

(c) *Credit generation before 2004*. In the case of a refinery that only generates credits during 2000 through 2003:

(1) Obtain a written representation from the company representative stating the refinery produces gasoline from crude oil.

(2) Compute and report as a finding the sulfur baseline from paragraph (a) of this section multiplied by 0.9.

(3) Obtain the annual average sulfur level from paragraph (b)(4) of this section.

(4) If the sulfur value under paragraph (c)(3) of this section is less than the sulfur value under paragraph (c)(2) of this section, compute and report as a finding the difference between the annual average sulfur level and the refinery's sulfur baseline from paragraph (a) of this section.

(5) Compute and report as a finding the total number of sulfur credits generated by multiplying the value in paragraph (c)(4) of this section by the volume of gasoline in paragraph (b)(2) of this section, and agree this value with the value reported to EPA.

(d) *Credit generation in 2004 and thereafter*. The following procedures shall be completed for a refinery or importer that generates credits in 2004 and thereafter:

(1) Obtain the annual average sulfur level for gasoline not classified as GPA from paragraph (b)(3) of this section.

(2) If the sulfur value under paragraph (d)(1) of this section is less than 30 ppm, compute and report as a finding the difference between the sulfur level under paragraph (d)(1) of this section and 30 ppm.

(3) Compute and report as a finding the total number of sulfur credits generated by multiplying the value calculated in paragraph (d)(2) of this section by the volume of gasoline not classified as GPA in paragraph (b)(3) of this section, and agree this number with the number reported to EPA.

(4) Obtain the annual average sulfur level for gasoline classified as GPA from paragraph (b)(3) of this section.

(5) If the sulfur value under paragraph (d)(4) of this section is less than the applicable level under § 80.310, compute and report as a finding the difference between the sulfur level under paragraph (d)(4) of this section and the appropriate level in § 80.310 .

(6) Compute and report as a finding the total number of sulfur credits generated by multiplying the value calculated in paragraph (d)(5) of this section by the volume of gasoline classified as GPA in paragraph (b)(3) of this section, and agree this number with the number reported to EPA.

(7) If the refiner has an approved status as a small refinery, obtain the annual average sulfur level for gasoline from paragraph (b)(4) of this section.

(8) If the sulfur value under paragraph (d)(7) of this section is less than the applicable standard under § 80.240, compute and report as a finding the difference between the sulfur level under paragraph (d)(7) of this section and the appropriate standard under § 80.240.

(9) Compute and report as a finding the total number of sulfur credits generated by multiplying the value calculated in paragraph (d)(8) of this section by the volume of gasoline in paragraph (b)(4) of this section, and agree this number with the number reported to EPA.

(e) *Credit purchases and sales*. The following attest procedures shall be completed for a refinery or importer that is a transferor or transferee of credits during an averaging period:

(1) Obtain contracts or other documents for all credits transferred to another refinery or importer during the year being reviewed; compute and report as a finding the number and year of creation of credits represented in these documents as being transferred away; and agree with the report to EPA.

(2) Obtain contracts or other documents for all credits received during the year being reviewed; compute and report as a finding the number and year of creation of credits represented in these documents as being received; and agree with the report to EPA.

(f) *Credits required for non-GPA gasoline.* The following attest procedures shall be completed for refineries and importers in 2005 and thereafter (2004 and thereafter for refineries having standards under § 80.240):

(1) Obtain the annual average sulfur level for gasoline not classified as GPA from paragraph (b)(3) of this section.

(2) If the value in paragraph (f)(1) of this section is greater than 30 ppm (or greater than the small refinery standard), compute and report as a finding the difference between 30 ppm (or the standard under § 80.240) and the value in paragraph (f)(1) of this section.

(3) Compute and report as a finding the total sulfur credits required by multiplying the value in paragraph (f)(2) of this section times the volume of gasoline not classified as GPA in paragraph (b)(3) of this section, and agree with the report to EPA.

(4) Obtain the refiner's or importer's representation as to the portion of the deficit under paragraph (f)(3) of this section that was resolved with credits, the portion that was resolved with allotments in 2005 only or that was carried forward as a deficit under § 80.205, and agree with the report to EPA (refineries subject to standards under § 80.240 cannot carry deficits forward).

(g) *Credits required for GPA gasoline.* The following attest procedures shall be completed in 2004 through 2006 for a refinery or importer that produces gasoline subject to the geographic phase-in area standards under § 80.216:

(1) Obtain the annual average sulfur level for the refinery's or importer's GPA gasoline from paragraph (b)(3) of this section.

(2) If the value in paragraph (g)(1) of this section is greater than the refinery's or importer's baseline plus 30 ppm under § 80.216, as determined in paragraph (a) of this section or 150 ppm, whichever is less, compute and report as a finding the difference between the annual average sulfur level and the baseline level plus 30 ppm, or 150 ppm, whichever is less.

(3) Compute and report as a finding the total sulfur credits and/or allotments required by multiplying the value in paragraph (g)(2) of this section times the volume of GPA gasoline from paragraph (b)(3) of this section.

(4) Obtain the refiner's or importer's representation as to the portion of the deficit under paragraph (g)(3) of this section that was resolved with credits, or the portion that was resolved with allotments in 2004 or 2005 only (compliance deficits for GPA gasoline cannot be carried forward).

(h) *Credit expiration.* The following attest procedures shall be completed for a refinery or importer that possesses credits during an averaging period:

(1) Obtain a list of all credits in the refiner's or importer's possession at any time during the year being reviewed, identified by the year of creation of the credits.

(2) If the year being reviewed is 2006 and thereafter, except in the case of gasoline produced for use in the GPA and gasoline produced by small refiners, determine whether any credits identified in paragraph (h)(1) of this section or Type A sulfur allotments created under paragraph (i) of this section and converted to credits were created before 2004, and if so, report as a finding this number of expired credits.

(3) If the year being reviewed is 2008 and thereafter, determine whether any credits identified in paragraph (h)(1) of this section or Type B sulfur allotments created under paragraph (i) of this section and converted to credits were created more than 5 years before the year being reviewed, and if so, report as a finding this number of expired credits (for example, unused credits created during the 2004 averaging period expire at the end of the 2009 averaging period).

(i) *Optional credit and allotment generation in 2003.* The following requirements apply to any refinery that generates credits and allotments in 2003 under § 80.275(a):

(1) Obtain a written representation from the company representative stating the refinery produces gasoline from crude oil.

(2) Obtain the refinery baseline value from paragraph (b)(1) of this section, the annual volume from paragraph (b)(2) of this section and the annual average sulfur level from paragraph (b)(4) of this section.

(3) Based on the annual sulfur level and refinery baseline, determine which equation under § 80.275(a)(2) applies.

(4) Using the applicable equations under § 80.275(a)(2), recalculate the sulfur allotments, by type, and credits and report as a finding.

(j) *Credit reconciliation.* The following attest procedures shall be completed each year credits were in the refiner's or importer's possession at any time during the year:

(1) Obtain the credits remaining or the credit deficit from the previous year from the refiner's or importer's report to EPA for the previous year.

(2) Compute and report as a finding the net credits remaining at the conclusion of the year being reviewed by totaling:

(i) Credits remaining from the previous year; plus

(ii) Credits generated under paragraphs (c), (d) and (i) of this section; plus

(iii) Allotments generated under paragraph (i) of this section which are converted to credits; plus

(iv) Credits purchased under paragraph (e) of this section; minus

(v) Credits sold under paragraph (e) of this section; minus

(vi) Credits used under paragraphs (f) and (g) of this section; minus

(vii) Credits expiring under paragraph (h) of this section; minus

(viii) Credit deficit from the previous year.

(3) Agree the credits remaining or the credit deficit at the conclusion of the year being reviewed with the report to EPA.

(4) If the refinery or importer had a credit deficit for both the previous year and the year being reviewed, report this fact as a finding.

(k) *Sulfur allotments in 2004 and 2005.* The following requirements apply to any refinery or importer that is subject to corporate pool average standards under § 80.195:

(1) *Corporate pool average.* (i) Obtain the annual average sulfur level for the refiner or importer from the sulfur report filed with EPA for all gasoline subject to corporate pool standards (all gasoline produced and imported, except that if 50% or greater of the gasoline volume was GPA gasoline the refiner or importer is not subject to the corporate pool average).

(ii) Compute and report as a finding the company's gasoline volume subject to corporate pool standards and average sulfur level for gasoline subject to corporate pool standards, and agree with the values reported to EPA.

(2) *Allotment generation.* (i) For 2004, if the corporate pool average is less than 120 ppm, compute and report as a finding the number and type of sulfur allotments generated in accordance with the applicable provisions under § 80.275(b).

(ii) For 2005, if the corporate pool average is less than 90 ppm, compute and report as a finding the number and type of sulfur allotments generated in accordance with the applicable provisions under § 80.275(b).

(iii) If the refiner or importer produced and imported 50% or more of its gasoline for GPA use in 2004 or 2005, no allotments can be generated in that year.

(3) *Allotment purchases and sales.* (i) Obtain contracts or other documents for all allotments transferred to another company during the year being reviewed; compute and report as a finding the number of allotments represented in these documents as being transferred away; and agree with the report to EPA.

(ii) Obtain contracts or other documents for all allotments received during the year being reviewed; compute and report as a finding the number of allotments represented in these documents as being received; and agree with the report to EPA.

(4) *Allotments required.* (i) For 2004, if the corporate pool average is greater than 120 ppm, compute and report as a finding the number of allotments required by multiplying the amount the corporate pool average is above 120 ppm times the corporate pool volume, and agree with the report to EPA.

(ii) For 2005, if the corporate pool average is greater than 90 ppm, compute and report as a finding the number of

allotments required by multiplying the amount the corporate pool average is above 90 ppm times the corporate pool volume, and agree with the report to EPA.

(iii) Obtain the number of allotments used to meet standards for GPA gasoline determined in paragraph (g) of this section.

(5) *Allotment reconciliation.* (i) Compute and report as a finding the net allotments remaining at the conclusion of the year being reviewed by totaling allotments:

(A) Generated under paragraphs (i)(4) and (k)(2) of this section; plus

(B) Purchased under paragraph (k)(3) of this section; minus

(C) Sold under paragraph (k)(3) of this section; minus

(D) Used under paragraph (k)(4) of this section for demonstrating compliance with the corporate pool average.

(ii) Report as a finding any allotments generated in 2003 or 2004 that are used to meet the corporate pool standards in 2005 that were not reduced to 50% of their original value.

(iii) If the company's net allotments remaining are less than zero, report this fact as a finding.

[65 FR 6823, Feb. 10, 2000, as amended at 67 FR 40185, June 12, 2002; 71 FR 54912, Sept. 20, 2006]

Subpart I—Motor Vehicle Diesel Fuel; Nonroad, Locomotive, and Marine Diesel Fuel; and ECA Marine Fuel

SOURCE: 66 FR 5136, Jan. 18, 2001, unless otherwise noted.

GENERAL INFORMATION

§ 80.500 What are the implementation dates for the motor vehicle diesel fuel sulfur control program?

The implementation dates for standards for motor vehicle diesel fuel and diesel fuel additives, and for other provisions of this subpart, are as follows:

(a) *Implementation date for standards applicable to production or importation of motor vehicle diesel fuel, and to motor vehicle diesel fuel additives.* Except as provided in paragraph (d) of this section, beginning June 1, 2006:

(1) The standards and requirements under § 80.520(a) and (b) shall apply to any motor vehicle diesel fuel produced or imported by any refiner or importer; and

(2) The standards and requirements under § 80.521 shall apply to any motor vehicle diesel fuel additive.

(b) *Implementation date for standards applicable to motor vehicle diesel fuel downstream of the refinery or importer.* Except as provided in paragraphs (c) and (d) of this section, beginning September 1, 2006, the standards and requirements under § 80.520(a) shall apply to any motor vehicle diesel fuel at any downstream location.

(c) *Implementation date for standards applicable to motor vehicle diesel fuel at retail outlets and wholesale purchaser-consumer facilities.* Except as provided in paragraph (d) of this section, beginning October 15, 2006, the standards and requirements under § 80.520(a) shall apply to any motor vehicle diesel fuel at any retail outlet or wholesale purchaser-consumer facility.

(d) *Implementation date for motor vehicle diesel fuel subject to the 500 ppm sulfur content standard in § 80.520(c).* (1) Beginning June 1, 2006, the sulfur content standard of § 80.520(c) shall apply to motor vehicle diesel fuel, but only where authorized under, and subject to, an applicable provision of this Subpart.

(2) Beginning June 1, 2010, the sulfur content standard of § 80.520(c) shall no longer apply to any motor vehicle diesel fuel produced or imported by any refiner or importer.

(3) Beginning October 1, 2010, the sulfur content standard of § 80.520(c) shall no longer apply to any motor vehicle diesel fuel at any downstream location other than a retail or wholesale purchaser-consumer facility.

(4) Beginning December 1, 2010, the sulfur content standard of § 80.520(c) shall no longer apply to any motor vehicle diesel fuel.

(e) *Other provisions.* All other provisions of this subpart apply beginning June 1, 2006, unless another date is specified.

[66 FR 5136, Jan. 18, 2001, as amended at 69 FR 39168, June 29, 2004; 70 FR 70509, Nov. 22, 2005]

§ 80.501 What fuel is subject to the provisions of this subpart?

(a) *Included fuel and additives.* The provisions of this subpart apply to the following fuels and additives except as specified in paragraph (b) of this section:

(1) Motor vehicle diesel fuel.

(2) Nonroad, locomotive, or marine diesel fuel.

(3) Diesel fuel additives.

(4) Heating oil.

(5) ECA marine fuel.

(6) Other distillate fuels.

(7) Motor oil that is used as or intended for use as fuel in diesel motor vehicles or nonroad diesel engines or is blended with diesel fuel for use in diesel motor vehicles or nonroad diesel engines, including locomotive and marine diesel engines, at any downstream location.

(b) *Excluded fuel.* The provisions of this subpart do not apply to distillate fuel that is designated for export outside the United States in accordance with § 80.598, identified for export by a transfer document as required under § 80.590, and that is exported.

[69 FR 39168, June 29, 2004, as amended at 75 FR 22968, Apr. 30, 2010]

§ 80.502 What definitions apply for purposes of this subpart?

The definitions of § 80.2 and the following additional definitions apply to this subpart I:

(a) *Entity* means any refiner, importer, distributor, retailer or wholesale-purchaser consumer of any distillate fuel (or other product subject to the requirements of this subpart I).

(b) *Facility* means any place, or series of places, where an entity produces, imports, or maintains custody of any distillate fuel (or other product subject to the requirements of this subpart I) from the time it is received to the time custody is transferred to another entity, except as described in paragraphs (b)(1) through (4) of this section:

(1) Where an entity maintains custody of a batch of diesel fuel (or other product subject to the requirements of this subpart I) from one place in the distribution system to another place (*e.g.*, from a pipeline to a terminal), all owned by the same entity, both places combined are considered to be one single aggregated facility, except where an entity chooses to treat components of such an aggregated facility as separate facilities. The choice made to treat these places as separate facilities may not be changed by the entity during any applicable compliance period. Except as specified in paragraph (b)(2) of this section, where compliance requirements depend upon facility-type, the entire facility must comply with the requirements that apply to its components as follows:

(i) If an aggregated facility includes a refinery, the entire facility must comply with the requirements applicable to refineries.

(ii) If an aggregated facility includes a truck loading terminal but not a refinery, the entire facility must comply with the requirements applicable to truck loading terminals.

(iii) *Situations where a refinery is aggregated with a truck loading terminal.* (A) Where a refinery is aggregated with a truck loading terminal, diesel fuel or other product subject to the requirements of this subpart I produced by such refinery and distributed over the truck terminal rack must be included in refinery batches that may be based on shipments to a truck terminal rack tank or on the total volumes delivered to tanker trucks for a period not to exceed 1 calendar month per batch.

(B) Where a refinery is aggregated with a truck loading terminal, diesel fuel or other product subject to the requirements of this subpart I that were imported or produced by another refinery, and that are distributed through the refinery or truck terminal rack, must be treated as previously designated fuel for which the aggregated facility is responsible for all applicable balance and downgrade requirements under §§ 80.527, 80.598, 80.599 and related recordkeeping and reporting requirements like any other distributor downstream from the refiner or importer.

(2) A refinery or import facility may not be aggregated with facilities that receive fuel from other refineries or import facilities, either directly or indirectly. For example, a refinery may not be aggregated with a terminal that receives any fuel from a common carrier pipeline. However, a refinery may

be aggregated with a pipeline and terminal that are owned by the same entity and which receive no fuel from any source other than the refinery. Likewise, a refinery may not be aggregated with a mobile facility that is also carrying another entity's fuel; it may however be aggregated with a mobile facility that does not receive fuel from any source other than the refinery. If a refinery or import facility is aggregated with other facilities, then the aggregated facility is treated as a refinery or import facility.

(3) Retail outlets or wholesale purchaser consumers may not be aggregated with any other facility.

(4) *Mobile components and mobile facilities*. (i) Where an entity maintains custody of diesel fuel in one or more mobile components (*e.g.*, rail, barge, shipping, or trucking operations), the mobile components may be aggregated as a single facility. Mobile components may also be aggregated with a facility from which they receive fuel or a facility to which they deliver fuel. However, mobile components may not be aggregated with both a facility from which they receive fuel and a facility to which they deliver fuel.

(ii) When an entity maintains title to, but not custody of, diesel fuel in one or more mobile components, the entity may treat the mobile component(s) as a facility under this paragraph (b), but only for the fuel to which the entity has title. In the event that title changes while a mobile component is in transport (but the fuel physically remains in the same mobile facility), the original entity that had title to the fuel continues to be responsible for the designate and track requirements until custody of the fuel is transferred from the mobile facility.

(5) An individual refinery or contiguous pipeline may not be subdivided into more than one facility. An individual terminal may not be subdivided into more than one facility unless approved by the Administrator.

(c) *Truck loading terminal* means any facility that dyes NRLM diesel fuel or ECA marine fuel, pays taxes on motor vehicle diesel fuel per IRS code (26 CFR part 48), or adds a fuel marker pursuant to § 80.510 to heating oil and delivers diesel fuel or heating oil into trucks for delivery to retail or ultimate consumer locations.

(d) *Batch* means a quantity of diesel fuel (or other product subject to the requirements of this subpart I) which is homogeneous with regard to those properties that are specified for MVNRLM diesel fuel or ECA marine fuel under this subpart I, has the same designation under this subpart I (if applicable), and whose custody is transferred from one facility to another facility.

(1) In the case of aggregated facilities consisting of a refinery and a truck loading terminal, a batch may be defined by one of the following methods:

(i) The sum of the deliveries from the truck loading terminal rack to trucks for periods not to exceed 1 month;

(ii) Each individual truck or truck compartment; or

(iii) For refineries with ''certification tanks'' where testing is performed and ''rack tanks'' that feed the truck loading terminal rack, each transfer from the certification tank to the rack tank. If this method of determining a batch is selected, it must be the sole method used and must be performed such that no double-counting or undercounting of volumes occurs.

(2) [Reserved]

(e) *Downstream location* means any point in the diesel fuel distribution system that is downstream of refineries and import facilities, for example, diesel fuel at facilities of distributors, carriers, retailers, kerosene blenders, and wholesale purchaser-consumers.

(f) *Definition of PADD*. For the purposes of this subpart only, the following definitions of PADDs apply:

(1) The following States are included in PADD I:

Connecticut
Delaware
District of Columbia
Florida
Georgia
Maine
Maryland
Massachusetts
New Hampshire
New Jersey
New York
North Carolina
Pennsylvania
Rhode Island

South Carolina
Vermont
Virginia
West Virginia

(2) The following States are included in PADD II:

Illinois
Indiana
Iowa
Kansas
Kentucky
Michigan
Minnesota
Missouri
Nebraska
North Dakota
Ohio
Oklahoma
South Dakota
Tennessee
Wisconsin

(3) The following States are included in PADD III:

Alabama
Arkansas
Louisiana
Mississippi
New Mexico
Texas

(4) The following States are included in PADD IV:

Colorado
Idaho
Montana
Utah
Wyoming

(5) The following States are included in PADD V:

Alaska
Arizona
California
Hawaii
Nevada
Oregon
Washington

(6) The following areas are included in PADD VI:

U.S. Virgin Islands
Commonwealth of Puerto Rico

(g) *Emission Control Area*. An Emission Control Area (ECA), for the purposes of this subpart, means the ''ECA'' as defined in 40 CFR 1043.20 as well as ''ECA associated area'' as defined in 40 CFR 1043.20.

(h) *Marine diesel engine*. For the purposes of this subpart I only, marine diesel engine means a diesel engine installed on a Category 1 (C1) or Category 2 (C2) marine vessel.

[69 FR 39168, June 29, 2004, as amended at 70 FR 70509, Nov. 22, 2005; 71 FR 25716, May 1, 2006; 75 FR 22969, Apr. 30, 2010]

§§ 80.503–80.509 [Reserved]

§ 80.510 What are the standards and marker requirements for NRLM diesel fuel and ECA marine fuel?

(a) *Beginning June 1, 2007*. Except as otherwise specifically provided in this subpart, all NRLM diesel fuel is subject to the following per-gallon standards:

(1) Sulfur content. 500 parts per million (ppm) maximum.

(2) Cetane index or aromatic content, as follows:

(i) A minimum cetane index of 40; or

(ii) A maximum aromatic content of 35 volume percent.

(b) *Beginning June 1, 2010*. Except as otherwise specifically provided in this subpart, all NR and LM diesel fuel is subject to the following per-gallon standards:

(1) Sulfur content.

(i) 15 ppm maximum for NR diesel fuel.

(ii) 500 ppm maximum for LM diesel fuel.

(2) Cetane index or aromatic content, as follows:

(i) A minimum cetane index of 40; or

(ii) A maximum aromatic content of 35 volume percent.

(c) *Beginning June 1, 2012*. Except as otherwise specifically provided in this subpart, all NRLM diesel fuel is subject to the following per-gallon standards:

(1) Sulfur content. 15 ppm maximum.

(2) Cetane index or aromatic content, as follows:

(i) A minimum cetane index of 40; or

(ii) A maximum aromatic content of 35 volume percent.

(d) *Marking provisions*. From June 1, 2007 through May 31, 2010:

(1) Except as provided for in paragraph (i) of this section, prior to distribution from a truck loading terminal, all heating oil shall contain six milligrams per liter of marker solvent yellow 124.

(2) All motor vehicle and NRLM diesel fuel shall be free of solvent yellow 124.

(3) Any diesel fuel that contains greater than or equal to 0.10 milligrams per liter of marker solvent yellow 124 shall be deemed to be heating oil and shall be prohibited from use in any motor vehicle or nonroad diesel engine (including locomotive, or marine diesel engines).

(4) Except as provided for in paragraph (i) of this section, any diesel fuel, other than jet fuel or kerosene that is downstream of a truck loading terminal, that contains less than 0.10 milligrams per liter of marker solvent yellow 124 shall be considered motor vehicle diesel fuel or NRLM diesel fuel, as appropriate.

(5) Any heating oil that is required to contain marker solvent yellow 124 pursuant to the requirements of this paragraph (d) must also contain visible evidence of dye solvent red 164.

(e) *Marking provisions.* From June 1, 2010 through May 31, 2012:

(1) Except as provided for in paragraph (i) of this section, prior to distribution from a truck loading terminal, all heating oil and diesel fuel designated as 500 ppm sulfur LM diesel fuel shall contain six milligrams per liter of solvent yellow 124.

(2) All motor vehicle and NR diesel fuel shall be free of marker solvent yellow 124.

(3) Any diesel fuel that contains greater than or equal to 0.10 milligrams per liter of marker solvent yellow 124 shall be deemed to be LM diesel fuel or heating oil, as appropriate, and shall be prohibited from use in any motor vehicle or nonroad diesel engine (except for locomotive or marine diesel engines).

(4) Except as provided for in paragraph (i) of this section, any diesel fuel, other than jet fuel or kerosene that is downstream of a truck loading terminal, that contains less than 0.10 milligrams per liter of marker solvent yellow 124 shall be considered motor vehicle diesel fuel or NR diesel fuel, as appropriate.

(5) Any LM diesel fuel or heating oil that is required to contain marker solvent yellow 124 pursuant to the requirements of this paragraph (e) must also contain visible evidence of dye solvent red 164.

(f) *Marking provisions.* From June 1, 2012 through November 30, 2014:

(1) Except as provided for in paragraph (i) of this section, prior to distribution from a truck loading terminal, all heating oil shall contain six milligrams per liter of marker solvent yellow 124 from June 1, 2012 through May 31, 2014.

(2) All motor vehicle and NR diesel fuel shall be free of marker solvent yellow 124, and all LM diesel fuel shall be free of marker solvent yellow 124 beginning December 1, 2012.

(3) From June 1, 2012 through November 30, 2012, any diesel fuel that contains greater than or equal to 0.10 milligrams per liter of marker solvent yellow 124 shall be deemed to be either heating oil or 500 ppm sulfur LM diesel fuel and shall be prohibited from use in any motor vehicle or nonroad diesel engine (excluding locomotive, or marine diesel engines).

(4) From December 1, 2012 through November 30, 2014, any diesel fuel that contains greater than or equal to 0.10 milligrams per liter of marker solvent yellow 124 shall be deemed to be heating oil and shall be prohibited from use in any motor vehicle or nonroad diesel engine (including locomotive, or marine diesel engines).

(5) Except as provided for in paragraph (i) of this section, from June 1, 2012 through November 30, 2014, any diesel fuel, other than jet fuel or kerosene that is downstream of a truck loading terminal, that contains less than 0.10 milligrams per liter of marker solvent yellow 124 shall be considered motor vehicle diesel fuel or NRLM diesel fuel, as appropriate.

(6) Any heating oil that is required to contain marker solvent yellow 124 pursuant to the requirements of this paragraph (f) must also contain visible evidence of dye solvent red 164.

(7) Beginning December 1, 2014 there are no requirements or restrictions on the use of marker solvent yellow 124 under this subpart.

(g) Special provisions in this part apply to the following areas:

(1) Northeast/Mid-Atlantic Area, which includes the following States and counties, through May 31, 2014: North Carolina, Virginia, Maryland, Delaware, New Jersey, Connecticut,

Rhode Island, Massachusetts, Vermont, New Hampshire, Maine, Washington DC, New York (except for the counties of Chautauqua, Cattaraugus, and Allegany), Pennsylvania (except for the counties of Erie, Warren, McKean, Potter, Cameron, Elk, Jefferson, Clarion, Forest, Venango, Mercer, Crawford, Lawrence, Beaver, Washington, and Greene), and the eight eastern-most counties of West Virginia (Jefferson, Berkeley, Morgan, Hampshire, Mineral, Hardy, Grant, and Pendleton).

(2) Alaska.

(h) Pursuant and subject to the provisions of § 80.536, § 80.554, § 80.560, or § 80.561:

(1) Except as provided in paragraph (j) of this section, from June 1, 2007 through May 31, 2010, NRLM diesel fuel produced or imported in full compliance with the requirements of §§ 80.536, 80.554, 80.560, and 80.561 is exempt from the per-gallon sulfur content standard and cetane or aromatics standard of paragraph (a) of this section.

(2) Except as provided in paragraph (j) of this section, from June 1, 2010 through May 31, 2012 for NR diesel fuel and from June 1, 2012 through May 31, 2014 for NRLM diesel fuel produced or imported in full compliance with the requirements of §§ 80.536, 80.554, 80.560, and 80.561 is exempt from the per-gallon standards of paragraphs (b) and (c) of this section, but is subject to the per-gallon standards of paragraph (a) of this section.

(i) The marking requirements of paragraphs (d)(1), (d)(4), (e)(1), (e)(4), (f)(1), and (f)(4) of this section do not apply to heating oil, or, for paragraphs (e)(1) and (e)(4) of this section, diesel fuel designated as LM diesel fuel that is distributed from a truck loading terminal located within the areas listed in paragraphs (g)(1) and (g)(2) of this section and is for sale or intended for sale within these areas, or that is distributed from any other truck loading terminal and is for sale or intended for sale within the area listed in (g)(2) of this section.

(j) The provisions of paragraphs (h)(1) and (h)(2) of this section do not apply to diesel fuel sold or intended for sale in the areas listed in paragraph (g)(1) of this section that is produced or imported in full compliance with the requirements of §§ 80.536 and 80.554 or to diesel fuel sold or intended for sale in the area listed in paragraph (g)(2) of this section that is produced or imported in full compliance with the requirements of § 80.536.

(k) *Beginning June 1, 2014.* All ECA marine fuel is subject to a maximum per-gallon sulfur content of 1,000 ppm.

[69 FR 39168, June 29, 2004, as amended at 70 FR 40895, July 15, 2005; 75 FR 22969, Apr. 30, 2010; 77 FR 61293, Oct. 9, 2012]

§ 80.511 What are the per-gallon and marker requirements that apply to NRLM diesel fuel, ECA marine fuel, and heating oil downstream of the refiner or importer?

(a) *Applicable dates for marker requirements.* Beginning June 1, 2006, all NRLM diesel fuel and ECA marine fuel shall contain less than 0.10 milligrams per liter of the marker solvent yellow 124, except for LM diesel fuel subject to the marking requirements of § 80.510(e).

(b) *Applicable dates for per-gallon standards.* (1) Beginning June 1, 2006, all NRLM diesel fuel must comply with the per-gallon sulfur standard for the designation or classification stated on its PTD, pump label, or other documentation. Based on the provisions of § 80.510(h) and (j), there is no uniform downstream sulfur standard until the downstream dates identified in paragraphs (b)(3) through (b)(8) of this section.

(2) Except as provided in paragraphs (b)(5) and (b)(8) of this section, beginning December 1, 2010, all NRLM diesel fuel must comply with the cetane index or aromatics standard of § 80.510.

(3) Except as provided in paragraphs (b)(5) through (b)(8) of this section, the per-gallon sulfur standard of § 80.510(a) shall apply to all NRLM diesel fuel beginning August 1, 2010 for all downstream locations other than retail outlets or wholesale purchaser-consumer facilities, shall apply to all NRLM diesel fuel beginning October 1, 2010 for retail outlets and wholesale purchaser-consumer facilities, and shall apply to all NRLM diesel fuel beginning December 1, 2010 for all locations.

(4) Except as provided in paragraphs (b)(5) through (8) of this section, the per-gallon sulfur standard of § 80.510(c)

shall apply to all NRLM diesel fuel beginning August 1, 2014 for all downstream locations other than retail outlets or wholesale purchaser-consumer facilities, shall apply to all NRLM diesel fuel beginning October 1, 2014 for retail outlets and wholesale purchaser-consumer facilities, and shall apply to all NRLM diesel fuel beginning December 1, 2014 for all locations. This paragraph (b)(4) does not apply to LM diesel fuel produced from transmix that is sold or intended for sale in areas other than in the area listed in § 80.510(g)(2) (*i.e.* Alaska), as provided by § 80.513(f).

(5) For all NRLM diesel fuel that is sold or intended for sale in the areas listed in § 80.510(g)(1), the per-gallon sulfur standard and the cetane index or aromatics standard of 80.510(a) shall apply to all NRLM diesel fuel beginning August 1, 2007 for all downstream locations other than retail outlets or wholesale purchaser-consumer facilities, shall apply to all NRLM diesel fuel beginning October 1, 2007 for retail outlets and wholesale purchaser-consumer facilities, and shall apply to all NRLM diesel fuel beginning December 1, 2007 for all locations.

(6) For all NR diesel fuel that is sold or intended for sale in the areas listed in § 80.510(g)(1), the per-gallon sulfur standard of § 80.510(b) shall apply to all NR diesel fuel beginning August 1, 2010 for all downstream locations other than retail outlets or wholesale purchaser-consumer facilities, shall apply to all NR diesel fuel beginning October 1, 2010 for retail outlets and wholesale purchaser-consumer facilities, and shall apply to all NR diesel fuel beginning December 1, 2010 for all locations.

(7) For all NRLM diesel fuel that is sold or intended for sale in the areas listed in § 80.510(g)(1), the per-gallon sulfur standard of § 80.510(c) shall apply to all NRLM diesel fuel beginning August 1, 2012 for all downstream locations other than retail outlets or wholesale purchaser-consumer facilities, shall apply to all NRLM diesel fuel beginning October 1, 2012 for retail outlets and wholesale purchaser-consumer facilities, and shall apply to all NRLM diesel fuel beginning December 1, 2012 for all locations.

(8) The provisions of paragraphs (b)(5) through (b)(7) of this section shall apply for all NRLM or NR diesel fuel that is sold or intended for sale in the area listed in § 80.510(g)(2), except for NRLM or NR diesel fuel that is produced in accordance with a compliance plan approved under § 80.554.

(9) The per-gallon sulfur standard of § 80.510(k) shall apply to all ECA marine fuel beginning August 1, 2014, for all downstream locations other than retail outlets or wholesale purchaser-consumer facilities, shall apply to all ECA marine fuel beginning October 1, 2014, for retail outlets and wholesale purchaser-consumer facilities, and shall apply to all ECA marine fuel beginning December 1, 2014, for all locations.

(10) For the purposes of this section, distributors that have their own fuel storage tanks and deliver only to ultimate consumers shall be treated the same as retailers and their facilities treated the same as retail outlets.

[69 FR 39169, June 29, 2004, as amended at 75 FR 22969, Apr. 30, 2010; 77 FR 75879, Dec. 26, 2012]

§ 80.512 May an importer treat diesel fuel as blendstock?

An importer may exclude diesel fuel that it imports from the requirements under this subpart, and instead may designate such diesel fuel as diesel fuel treated as blendstock (DTAB), if all the following conditions are met:

(a) The DTAB must be included in all applicable designation, credit and compliance calculations for diesel fuel for a refinery operated by the same entity that is the importer . That entity must meet all refiner standards and requirements.

(b) The importer entity may not transfer title of the DTAB to another entity until the DTAB has been used to produce diesel fuel and all refiner standards and requirements have been met for the diesel fuel produced.

(c) The refinery at which the DTAB is used to produce diesel fuel must be physically located at either the same terminal at which the DTAB first arrives in the U.S., the import facility, or at a facility to which the DTAB is directly transported from the import facility.

(d) The DTAB must be completely segregated from any other diesel fuel,

including any diesel fuel tank bottoms, prior to the point of blending, sampling and testing in the importer entity's refinery operation. The DTAB may, however, be added to a diesel fuel blending tank where the diesel fuel tank bottom is not included as part of the batch volume for a prior batch. In addition, the DTAB may be placed into a storage tank that contains other DTAB imported by that importer. The DTAB also may be discharged into a tank containing finished diesel fuel of the same category as the diesel fuel which will be produced using the DTAB (for example, 15 ppm sulfur undyed or 15 ppm sulfur dyed diesel fuel) provided the blending process is performed in that same tank.

(e) The entity must account for the volume of diesel fuel produced using DTAB in a manner that excludes the volume of any previously designated diesel fuel. The diesel fuel tank bottom may not be included in the company's refinery compliance calculations for that batch of diesel fuel if the fuel in that tank bottom has been previously designated by a refiner or importer. This exclusion of previously designated diesel fuel must be accomplished using the following approach:

(1) Determine the volume of any tank bottom that is previously designated diesel fuel before any diesel fuel production begins.

(2) Add the DTAB plus any blendstock to the storage tank, and completely mix the tank.

(3) Determine the volume and sulfur content of the diesel fuel contained in the storage tank after blending is complete. Mathematically subtract the volume of the tank bottom to determine the volume of the DTAB plus blendstock added, and subsequently transferred to another facility. Such fuel is reported to EPA as a batch of diesel fuel under §§ 80.593, 80.601, and 80.604.

(4) If previously designated motor vehicle diesel fuel having a sulfur content of 15 ppm or less is blended with DTAB, and the combined product after blending has a sulfur content that exceeds 15 ppm, the importer entity, in its capacity as a refiner, must redesignate all the diesel fuel as 500 ppm sulfur motor vehicle diesel fuel for purposes of the temporary compliance option under § 80.530, or other permissible redesignation under § 80.598. If #2D 15 ppm sulfur motor vehicle diesel fuel is redesignated as #2D 500 ppm sulfur motor vehicle diesel fuel, such entity must apply the volume of previously designated 15 ppm sulfur diesel fuel, for purposes of its operations as a distributor, to its downgrading limitation under § 80.527, if applicable, and for volume balancing purposes under § 80.599.

(5) As an alternative to paragraphs (e)(1) through (e)(4) of this section, where an importer has a blending tank that is used only to combine DTAB and blending components, and no previously designated diesel fuel is added to the tank, the importer entity, in its capacity as a refiner, may account for the diesel fuel produced in such a blending tank by sampling and testing for the sulfur content of the batch after DTAB and blendstock are added and mixed, and reporting the volume of diesel fuel transferred from that tank to a different facility, up to the point where a new blend is produced by adding new DTAB and blendstock.

(f) The importer must include the volume and sulfur content of each batch of DTAB in the annual importer reports to EPA, as prescribed under §§ 80.593, 80.601, and 80.604, but with a notation that the batch is not included in the importer compliance calculations because the product is DTAB. Any DTAB that ultimately is not used in the importer's refinery operation (for example, a tank bottom of DTAB at the conclusion of the refinery operation), must be treated as newly imported diesel fuel, for which all required sampling and testing, and recordkeeping must be accomplished, and included in the importer's compliance calculations for the averaging period when this sampling and testing occurs.

(g) The importer must retain records that reflect the importation, sampling and testing, and physical movement of any DTAB, and must make these records available to EPA on request.

[69 FR 39170, June 29, 2004]

§ 80.513 What provisions apply to transmix processing facilities and pipelines that produce diesel fuel from pipeline interface?

For purposes of this section, transmix means a mixture of finished fuels, such as pipeline interface, that no longer meets the specifications for a fuel that can be used or sold without further processing or handling. For the purposes of this section, pipeline interface means the mixture between different fuels that abut each other during shipment by pipeline. This section applies to refineries (or other facilities) that produce diesel fuel from transmix by distillation or other refining processes but do not produce diesel fuel by processing crude oil and to pipelines that produce diesel fuel from transmix. This section only applies to the volume of diesel fuel produced from transmix by a transmix processor using these processes, and to the diesel fuel volume produced by a pipeline operator from transmix. This section does not apply to any diesel fuel volume produced by the blending of blendstocks.

(a) From June 1, 2006 through May 31, 2010, motor vehicle diesel fuel produced by a transmix processor is subject to the 500 ppm sulfur standard under § 80.520(c).

(b) Beginning June 1, 2010, motor vehicle diesel fuel produced by a transmix processor is subject to the sulfur standard under § 80.520(a)(1).

(c) From June 1, 2007 through May 31, 2010, NRLM diesel fuel produced by a transmix processor is exempt from the standards of § 80.510(a). This paragraph (c) does not apply to NRLM diesel fuel that is sold or intended for sale in the areas listed in § 80.510(g)(1) or (g)(2).

(d) From June 1, 2010 through May 31, 2014, NRLM diesel fuel produced by a transmix processor or a pipeline facility that produces diesel fuel from transmix is subject to the standards under § 80.510(a). This paragraph (d) does not apply to NRLM diesel fuel that is sold or intended for sale in the areas listed in § 80.510(g)(1) or (g)(2).

(e) From June 1, 2014 and beyond, NRLM diesel fuel produced by a transmix processor and a pipeline facility that produces diesel fuel from transmix is subject to the standards of § 80.510(c).

(f) From February 25, 2013 through May 31, 2014, LM diesel fuel produced by a transmix processor or a pipeline facility that produces diesel fuel from transmix that is sold or intended for sale in the area listed in § 80.510(g)(1) is subject to the standards of § 80.510(a) provided that the conditions in paragraph (h) of this section are satisfied. Diesel fuel produced from transmix that does not meet the conditions in paragraph (h) of this section is subject to the sulfur standard in § 80.510(c).

(g) Beginning June 1, 2014, LM diesel fuel produced by a transmix processor or a pipeline facility that produces diesel fuel from transmix is subject to the sulfur standard of § 80.510(a), provided that the conditions in paragraph (h) of this section are satisfied. Diesel fuel produced from transmix that does not meet the conditions in paragraph (h) of this section is subject to the sulfur standard in § 80.510(c).

(h) The following conditions must be satisfied to allow the production of 500 ppm LM under paragraphs (f) and (g) of this section.

(1) The fuel must be produced from transmix.

(2) The fuel must not be sold or intended for sale in the area listed in § 80.510(g)(2) (*i.e.*, Alaska).

(3) A facility producing 500 ppm LM diesel fuel must obtain approval from the Administrator for a compliance plan. The compliance plan must detail how the facility will segregate any 500 ppm LM diesel fuel produced subject to the standards under § 80.510(a) from the producer through to the ultimate consumer from fuel having other designations. The compliance plan must demonstrate that the end users of 500 ppm LM will also have access to 15 ppm diesel fuel for use in those engines that require the use of 15 ppm diesel fuel. The compliance plan must identify the entities that handle the 500 ppm LM through to the ultimate consumer. No more than 4 separate entities shall handle the 500 ppm LM between the producer and the ultimate consumer. The compliance plan must also identify all ultimate consumers to whom the refiner supplies the 500 ppm LM diesel fuel. The compliance plan must detail how misfueling of 500 ppm LM into vehicles or equipment that require the

use of 15 ppm diesel fuel will be prevented.

(i) Producers of 500 ppm LM diesel fuel must be registered with EPA under § 80.597 prior to the distribution of any 500 ppm LM diesel fuel.

(ii) Producers of 500 ppm LM must initiate a PTD that meets the requirements in paragraph (h)(3)(iii) of this section.

(iii) All transfers of 500 ppm LM diesel fuel must be accompanied by a PTD that clearly and accurately states the fuel designation; the PTD must also meet all other requirements of § 80.590.

(iv) Batches of 500 ppm LM may be shipped by pipeline provided that such batches do not come into physical contact in the pipeline with batches of other distillate fuel products that have a sulfur content greater than 15 ppm.

(v) The volume of 500 ppm LM shipped via pipeline under paragraph (h)(3)(iv) of this section may swell by no more than 2% upon delivery to the next party. Such a volume increase may only be due to volume swell due to temperature differences when the volume was measured or due to normal pipeline interface cutting practices notwithstanding the requirement under paragraph (h)(3)(iv) of this section.

(vi) Entities that handle 500 ppm LM must calculate the balance of 500 ppm LM received versus the volume delivered and used on an annual basis.

(vii) The records required in this section must be maintained for five years, by each entity that handles 500 ppm LM and be made available to EPA upon request.

(4) All parties that take custody of 500 ppm LM must segregate the product from other fuels and observe the other requirements in the compliance plan approved by EPA pursuant to paragraph (h)(3) of this section.

[69 FR 39171, June 29, 2004, as amended at 75 FR 22969, Apr. 30, 2010; 77 FR 75879, Dec. 26, 2012]

§§ 80.514–80.519 [Reserved]

MOTOR VEHICLE DIESEL FUEL STANDARDS AND REQUIREMENTS

§ 80.520 What are the standards and dye requirements for motor vehicle diesel fuel?

(a) *Standards.* All motor vehicle diesel fuel is subject to the following per-gallon standards:

(1) *Sulfur content.* 15 parts per million (ppm) maximum, except as provided in paragraph (c) of this section;

(2) *Cetane index and aromatic content.* (i) A minimum cetane index of 40; or

(ii) A maximum aromatic content of 35 volume percent.

(b) *Dye requirements.* (1) All motor vehicle diesel fuel shall be free of visible evidence of dye solvent red 164 (which has a characteristic red color in diesel fuel), except for motor vehicle diesel fuel that is used in a manner that is tax exempt under section 4082 of the Internal Revenue Code. All motor vehicle diesel fuel shall be free of yellow solvent 124.

(2) Until June 1, 2010, any #1D or #2D distillate, or NP diesel fuel that does not show visible evidence of dye solvent red 164 shall be considered to be motor vehicle diesel fuel and subject to all the requirements of this subpart for motor vehicle diesel fuel, except for distillate fuel designated or classified as any of the following:

(i) For use only in the State of Alaska, as provided under 40 CFR 69.51.

(ii) For use under a national security exemption under § 80.606 or for use only in a research and development testing program exempted under § 80.607.

(iii) For use in the U.S. Territories as provided under § 80.608.

(iv) Jet fuel meeting the definition under § 80.2.

(v) Kerosene meeting the definition under § 80.2.

(vi) Diesel fuel that is produced beginning June 1, 2006, with a sulfur level less than or equal to 500 ppm, and designated as NRLM or LM that has not yet been distributed from a truck loading terminal or bulk terminal to a retail outlet, wholesale purchaser-consumer or ultimate consumer.

(c) Pursuant and subject to the provisions of §§ 80.530–80.532, 80.552(a), 80.560–80.561, and 80.620, only motor vehicle

diesel fuel produced or imported in full compliance with the requirements of those provisions is subject to the following per-gallon standard for sulfur content: 500 ppm maximum.

[66 FR 5136, Jan. 18, 2001, as amended at 69 FR 39171, June 29, 2004; 71 FR 25717, May 1, 2006]

§ 80.521 What are the standards and identification requirements for diesel fuel additives?

(a) Except as provided in paragraph (b) of this section, any diesel fuel additive that is added to, intended for adding to, used in, or offered for use in any MVNRLM diesel fuel subject to the 15 ppm sulfur content standards of § 80.510(b), § 80.510(c), or § 80.520(a) at any downstream location must—

(1) Have a sulfur content less than or equal to 15 ppm.

(2) Be accompanied by a product transfer document pursuant to § 80.591 indicating that the additive complies with the 15 ppm sulfur standard for diesel fuel, except for those diesel fuel additives which are only sold in containers for use by the ultimate consumer of diesel fuel and which are subject to the requirements of § 80.591(d).

(b) Any diesel fuel additive that is added to, intended for adding to, used in, or offered for use in diesel fuel subject to the 15 ppm sulfur content standards of § 80.510(b) or (c) or § 80.520(a) may have a sulfur content exceeding 15 ppm provided that each of the following conditions are met:

(1) The additive is added to or used in the diesel fuel in a quantity less than one percent by volume of the resultant additive/diesel fuel mixture;

(2) The product transfer document complies with the informational requirements of § 80.591; and

(3) The additive is not used or intended for use by an ultimate consumer in diesel motor vehicles or nonroad diesel engines.

[69 FR 39171, June 29, 2004]

§ 80.522 May used motor oil be dispensed into diesel motor vehicles or nonroad diesel engines?

No person may introduce used motor oil, or used motor oil blended with diesel fuel, into the fuel system of model year 2007 or later diesel motor vehicles or model year 2011 or later nonroad diesel engines (not including locomotive or marine diesel engines), unless both of the following requirements have been met:

(a) The vehicle or engine manufacturer has received a Certificate of Conformity under 40 CFR part 86, 40 CFR part 89, or 40 CFR part 1039 and the certification of the vehicle or engine configuration is explicitly based on emissions data with the addition of motor oil; and

(b) The oil is added in a manner and rate consistent with the conditions of the Certificate of Conformity.

[69 FR 39171, June 29, 2004]

§ 80.523 [Reserved]

§ 80.524 What sulfur content standard applies to motor vehicle diesel fuel downstream of the refinery or importer?

(a) Except as provided in paragraph (b) of this section or otherwise in the provisions of this Subpart I, the 15 ppm sulfur content standard of § 80.520(a) shall apply to all motor vehicle diesel fuel at any downstream location.

(b) Prior to the October 1, 2010 and December 1, 2010 dates specified in § 80.500(d)(3) and (4), the 500 ppm sulfur content standard of § 80.520(c) shall apply to motor vehicle diesel fuel at any downstream location, provided the following conditions are met:

(1) The product transfer documents comply with the requirements of § 80.590, including indicating that the fuel complies with the 500 ppm sulfur standard for motor vehicle diesel fuel and is for use only in model year 2006 and older diesel motor vehicles, or the fuel is downgraded pursuant to the provision of § 80.527 to motor vehicle diesel fuel subject to the 500 ppm sulfur standard;

(2) The motor vehicle diesel fuel is not represented or intended for sale or use as subject to the 15 ppm sulfur content standard, and is not dispensed, or intended to be dispensed, into model year 2007 and later motor vehicles by a retailer or wholesale purchaser-consumer; and

(3) For retailers or wholesale purchaser-consumers, the pump labeling requirements of § 80.570(a) are satisfied.

§ 80.525 What requirements apply to kerosene blenders?

(a) For purposes of this subpart, a kerosene blender means any refiner who produces NRLM or motor vehicle diesel fuel by adding kerosene to NRLM or motor vehicle diesel fuel downstream of the refinery that produced that fuel or of the import facility where the fuel was imported, without altering the quality or quantity of the fuel in any other manner.

(b) Kerosene blenders are not subject to the requirements of this subpart applicable to refiners of diesel fuel, but are subject to the requirements and prohibitions applicable to downstream parties.

(c) For purposes of compliance with §§ 80.524(b)(1) and 80.511(b)(1), the product transfer documents must indicate that the fuel to which kerosene is added complies with the 500 ppm sulfur standard for motor vehicle diesel fuel and is for use only in model year 2006 and older diesel motor vehicles, the fuel is properly downgraded pursuant to the provisions of § 80.527 to motor vehicle diesel fuel subject to the 500 ppm sulfur standard, or the applicable NRLM standard.

(d) Kerosene that a kerosene blender adds or intends to add to diesel fuel subject to the 15 ppm sulfur content standard must meet the 15 ppm sulfur content standard, and either of the following requirements:

(1) The product transfer document received by the kerosene blender indicates that the kerosene is diesel fuel that complies with the 15 ppm sulfur content standard.

(2) The kerosene blender has test results indicating the kerosene complies with the 15 ppm sulfur standard.

[66 FR 5136, Jan. 18, 2001, as amended at 70 FR 40895, July 15, 2005; 75 FR 22969, Apr. 30, 2010]

§ 80.526 [Reserved]

§ 80.527 Under what conditions may motor vehicle diesel fuel subject to the 15 ppm sulfur standard be downgraded to motor vehicle diesel fuel subject to the 500 ppm sulfur standard?

(a) *Definitions*. As used in this section, downgrade means changing the designation or classification of motor vehicle diesel fuel subject to the 15 ppm sulfur standard under § 80.520(a)(1) to motor vehicle diesel fuel subject to the 500 ppm sulfur standard under § 80.520(c). A downgrade occurs when the change in designation or classification takes place. Changing the designation or classification of motor vehicle diesel fuel subject to the 15 ppm sulfur standard under § 80.520(a)(1) to any designation or classification that is not a motor vehicle diesel fuel is not a downgrade for purposes of this section.

(b) *Who is subject to the downgrade limitation:* Any distributor, retailer, or wholesale purchaser consumer that takes custody of any diesel fuel designated or classified as #2D 15 ppm sulfur motor vehicle diesel fuel and delivers any diesel fuel designated or classified as #2D 500 ppm motor vehicle diesel fuel.

(c) *Downgrading limitation*. The provisions of this section apply beginning October 15, 2006.

(1) Except as provided in paragraphs (d) and (e) of this section, a person described in paragraph (b) of this section may not downgrade a total of more than 20 percent of the #2D motor vehicle diesel fuel (by volume) that is subject to the 15 ppm sulfur standard of § 80.520(a)(1) to #2D motor vehicle diesel fuel subject to the sulfur standard of § 80.520(c) while such person has custody of such fuel.

(2) The limitation of paragraph (c)(1) of this section applies separately to each facility as defined under § 80.502 where there is custody of the fuel when it is downgraded.

(3) Compliance with the limitation of paragraph (c)(1) of this section applies separately for the compliance periods of October 15, 2006 through May 31, 2007; June 1, 2007 through June 30, 2008; July 1, 2008 through June 30, 2009; July 1, 2009 through May 31, 2010.

(4) Except as provided in paragraph (e) of this section, compliance with the limitation of paragraph (c)(1) of this section shall be as calculated under § 80.599(e).

(d) *Diesel fuel in violation of the 15 ppm standard*. Where motor vehicle diesel fuel subject to the 15 ppm sulfur standard of § 80.520(a)(1) is found to be in violation of any standard under § 80.520(a)

and is consequently downgraded to 500 ppm sulfur motor vehicle diesel fuel, the person having custody of the fuel at the time it is found to be in violation must include the volume of such downgraded fuel toward its 20 percent volume limitation under paragraph (c)(1) of this section, unless the person demonstrates that it did not cause the violation.

(e) *Special provisions for retail outlets and wholesale purchaser-consumer facilities.* Notwithstanding the provisions of paragraph (c)(1) of this section, retailers and wholesale purchaser-consumers shall comply with the downgrading limitation as follows:

(1) Retailers and wholesale purchaser-consumers who sell, offer for sale, or dispense motor vehicle diesel fuel that is subject to the 15 ppm sulfur standard under § 80.520(a)(1) are exempt from the volume limitations of paragraph (c)(1) of this section.

(2) A retailer or wholesale purchaser-consumer who does not sell, offer for sale, or dispense motor vehicle diesel fuel subject to the 15 ppm sulfur standard under § 80.520(a)(1) must comply with the downgrading limitations of paragraph (c) of this section, such that it may not downgrade a volume of motor vehicle diesel fuel, designated as subject to the 15 ppm sulfur standard, for more than 20% of the total volume of motor vehicle diesel fuel that it sells, offers for sale, or dispenses in any compliance period.

(f) *Termination of downgrading limitations.* The provisions of this section shall not apply after May 31, 2010.

[69 FR 39172, June 29, 2004, as amended at 71 FR 25717, May 1, 2006]

§§ 80.528–80.529 [Reserved]

TEMPORARY COMPLIANCE OPTION

§ 80.530 Under what conditions can 500 ppm motor vehicle diesel fuel be produced or imported after May 31, 2006?

(a) Beginning June 1, 2006, a refiner or importer may produce or import motor vehicle diesel fuel subject to the 500 ppm sulfur content standard of § 80.520(c) if all of the following requirements are met:

(1) Each batch of motor vehicle diesel fuel subject to the 500 ppm sulfur content standard must be designated by the refiner or importer as subject to such standard, pursuant to § 80.598(a).

(2) The refiner or importer must meet the requirements for product transfer documents in § 80.590 for each batch subject to the 500 ppm sulfur content standard.

(3)(i) The volume of motor vehicle diesel fuel that is produced or imported during a compliance period (V_{500}, as provided in paragraph (a)(5) of this section, may not exceed the following volume limit:

(A) For the compliance periods prior to the period from July 1, 2009 through May 31, 2010, 20 percent of the volume of motor vehicle diesel fuel that is produced or imported during a compliance period (V_t) plus an additional volume of motor vehicle diesel fuel represented by credits properly generated and used pursuant to the requirements of §§ 80.531 and 80.532.

(B) For the compliance period from July 1, 2009 through May 31, 2010, 20 percent of the volume of motor vehicle diesel fuel that is produced or imported prior to January 1, 2010 during the compliance period (V_t), plus an additional volume of motor vehicle diesel fuel represented by credits properly generated and used pursuant to the requirements of §§ 80.531 and 80.532. From January 1, 2010 through May 31, 2010, the volume of motor vehicle diesel fuel that is produced or imported shall not exceed the volume represented by credits used pursuant to § 80.532.

(ii) The terms V_{500} and V_t have the meaning specified in § 80.531(a)(2).

(4) Compliance with the volume limit in paragraph (a)(3) of this section must be determined separately for each refinery. For an importer, such compliance must be determined separately for each Credit Trading Area (as defined in § 80.531) into which motor vehicle diesel fuel is imported. If a party is both a refiner and an importer, such compliance shall be determined separately for the refining and importation activities.

(5) Compliance with the volume limit in paragraph (a)(3) of this section shall be determined on an annual basis, where the annual compliance period is from July 1 through June 30. For the year 2006, compliance shall be determined for the period June 1, 2006

through June 30, 2007. For the year 2010, compliance shall be determined for the period of July 1, 2009 through May 31, 2010.

(6) Any motor vehicle diesel fuel produced or imported above the volume limit in paragraph (a)(3) of this section shall be subject to the 15 ppm sulfur content standard. However, for any compliance period prior to the compliance period July 1, 2009 through May 31, 2010, a refiner or importer may exceed the volume limit in paragraph (a)(3) of this section by no more than 5 percent of the volume of diesel fuel produced or imported during the compliance period (V_t), provided that for the immediately following compliance period:

(i) The refiner or importer complies with the volume limit in paragraph (a)(3) of this section; and

(ii) The refiner or importer produces or imports a volume of motor vehicle diesel fuel subject to the 15 ppm sulfur standard, or obtains credits properly generated and used pursuant to the requirements of §§ 80.531 and 80.532 that represent a volume of motor vehicle diesel fuel, equal to the volume of the exceedance for the prior compliance period.

(b) After May 31, 2010, no refiner or importer may produce or import motor vehicle diesel fuel subject to the 500 ppm sulfur content standard pursuant to this section.

[69 FR 39172, June 29, 2004]

§ 80.531 How are motor vehicle diesel fuel credits generated?

(a) *Generation of credits from June 1, 2006 through December 31, 2009.* (1) A refiner or importer may generate credits during the period June 1, 2006 through December 31, 2009, for motor vehicle diesel fuel produced or imported that is designated as subject to the 15 ppm sulfur content standard under § 80.520(a)(1). Credits may be generated only if the volume of motor vehicle diesel fuel designated under § 80.598(a) as subject to the 15 ppm sulfur standard of § 80.520(a) exceeds 80 percent of the total volume of motor vehicle diesel fuel produced or imported as described in paragraph (a)(2) of this section.

(2) The number of motor vehicle diesel fuel credits generated shall be calculated for each compliance period (as specified in § 80.530(a)(5)) as follows:

$$C = V15_{15} - (0.80 \times V_t)$$

Where:

C = the positive number of motor vehicle diesel fuel credits generated, in gallons.

V_{15} = the total volume in gallons of diesel fuel produced or imported that is designated under § 80.598 as motor vehicle diesel fuel and subject to the standards of § 80.520(a) during the compliance period.

$V_t n = V_{15} + V_{500}$

V_{500} = the total volume in gallons of diesel fuel produced or imported that is designated under § 80.598(a) as motor vehicle diesel fuel and subject to the 500 ppm sulfur standard under § 80.520(c) plus the total volume of any other diesel fuel (not including V_{15}, diesel fuel that is dyed in accordance with § 80.520(b) at the refinery or import facility where the diesel fuel is produced or imported, or diesel fuel that is designated as NRLM under § 80.598(a)) represented as having a sulfur content less than or equal to 500 ppm.

(3) Credits shall be generated and designated as follows:

(i) Credits shall be generated separately for each refinery of a refiner.

(ii) Credits shall be generated separately for each credit trading area (CTA), as defined in paragraph (a)(5) of this section, into which motor vehicle diesel fuel is imported by an importer.

(iii) Credits shall be designated separately by year of generation and by CTA of generation. In the case of a refiner, credits shall also be designated by refinery, and in the case of an importer, credits shall also be designated by port of import.

(iv) Credits may not be generated by both a foreign refiner and by an importer for the same motor vehicle diesel fuel.

(4) Credits shall be generated by a foreign refiner as provided in § 80.620(c) and this section.

(5) For purposes of this subpart, the CTAs are:

(i) PADDs I, II, III and IV, as described in § 80.502(f) except as provided in paragraph (a)(5)(iv) of this section. The CTAs shall be designated as CTA 1, 2, 3, and 4, respectively, and correspond to PADDs I, II, III, and IV, respectively;

(ii) CTA 5 shall correspond to PADD V, as described in § 80.502(f), except as provided in paragraphs (a)(5)(iii) and (iv) of this section;

(iii) The states of Hawaii and Alaska shall each be treated as a separate CTA and not a part of CTA 5. Alaska shall be CTA 6. Hawaii shall be CTA 7;

(iv) If any state (through a waiver of federal preemption under Section 211(c)(4) of the Clean Air Act, 42 U.S.C. 7545(c)(4)) implements a law or regulation that requires a greater volume of motor vehicle diesel fuel to meet a sulfur standard of less than or equal to 15 ppm than the volume that is required under this subpart, no motor vehicle diesel fuel produced in that state or imported directly into that state may generate credits under this subpart, effective on the implementation date of the sulfur program under the state statute or regulation that implements the more stringent state requirements.

(v) The U.S. territories specified in § 80.502(f)(6) shall be included in CTA 1.

(6) No credits may be generated under this paragraph (a) after December 31, 2009.

(7) No refinery may generate credits under both this paragraph (a) and under paragraph (e) of this section.

(b) *Generation of early credits from June 1, 2001 through May 31, 2005.* (1) Beginning June 1, 2001, a refiner or importer may generate one credit for each gallon of motor vehicle diesel fuel meeting the sulfur content standard in § 80.520(a)(1) that is used in vehicles with engines that are certified to meet the model year 2007 heavy duty engine PM standard under 40 CFR 86.007–11, or vehicles with retrofit technologies that achieve emission levels equivalent to the 2007 NO_X or PM emission standard verified as part of a retrofit program administered by EPA or a state. Such refiners and importers must comply with the requirements of paragraphs (b) and (d) of this section.

(2)(i) Any refiner or importer planning to generate credits under this paragraph must provide notice of intent to generate early credits at least 120 calendar days prior to the date it begins generating credits under this paragraph by submitting such notice to Attn: Early Diesel Credits Notice, at the address in § 80.595.

(ii) The notice shall include a detailed plan that demonstrates that the motor vehicle diesel fuel meeting the 15 ppm sulfur standard of § 80.520(a)(1) for which credits are generated under this paragraph will be used in vehicles with engines that are certified to meet the model year 2007 heavy duty engine PM standard under 40 CFR 86.007–11 or in vehicles with retrofit technologies that achieve emission levels equivalent to the 2007 NO_X or PM emission standard verified as part of a retrofit program administered by EPA or a state. The notice must include the refiner's or importer's detailed plan for ensuring that all motor vehicle diesel fuel that generates early credits under this paragraph will be segregated from all other motor vehicle diesel fuel not meeting the sulfur standard under § 80.520(a)(1), from the refinery or import facility to its ultimate use in motor vehicles.

(3) No credits may be generated under this paragraph (b) after May 31, 2005.

(4) A refiner or importer may generate credits under this paragraph and also generate credits under paragraph (a) of this section, and a small refiner, as defined under § 80.550, may generate credits under this paragraph (b) and paragraph (e) of this section.

(c) *Generation of early credits from June 1, 2005 through May 31, 2006.* (1) Beginning June 1, 2005, a refiner or importer may generate one credit for each gallon of motor vehicle diesel fuel produced or imported that meets the 15 ppm sulfur standard in § 80.520(a)(1) that is delivered into the distribution system. Such refiners and importers must comply with the requirements of this paragraph (c) and paragraph (d) of this section.

(2)(i) Any refiner or importer planning to generate credits under this paragraph must provide notice of intent to generate early credits at least 30 calendar days prior to the date it begins generating credits under this paragraph (c).

(ii) [Reserved]

(3) No credits may be generated under this paragraph after May 31, 2006.

(4) A refiner or importer may generate credits under this paragraph (c) and also generate credits under paragraph (a) of this section, and a small

refiner, as defined under § 80.550, may generate credits under this paragraph (c) and paragraph (e) of this section.

(5) *Credit transfers for early credits.* For early credits generated under § 80.531(c), credits may be used in any of the CTAs 1 through 5 that were generated in any of the CTAs 1 through 7 to achieve compliance with the volume limit in § 80.503(a)(3);

(d) *Additional requirements for early credits.* Early credits generated under paragraphs (b) and (c) of this section are subject to the following additional requirements:

(1) The designation requirements of § 80.598, and all recordkeeping and reporting requirements of §§ 80.592 (except for paragraph (a)(3)), 80.593, 80.594, 80.600, and 80.601.

(2) Credits generated under paragraphs (b) and (c) of this section shall be generated separately by CTA as defined in paragraph (a)(5) of this section and must be designated by CTA of generation, and by the refiner and refinery, or by importer and port of import, as applicable, except as provided under paragraph (c)(5) of this section.

(3) Credits may not be generated for the same fuel by both a foreign refiner and an importer.

(4) [Reserved]

(5) In addition to the reporting requirements under paragraph (d)(1) of this section, the refiner or importer must submit a report to the Administrator no later than August 31, 2005 for the period from June 1, 2004 through May 31, 2005, or August 31, 2006 for the period from June 1, 2005 through May 31, 2006, demonstrating that all the motor vehicle diesel fuel produced or imported for which credits were generated met the applicable requirements of paragraph (b), (c), or (d)(4) of this section. If the Administrator finds that such credits did not in fact meet the requirements of paragraphs (b)(1) and (c)(1) of this section, as applicable, or if the Administrator determines that there is insufficient information to determine the validity of such credits, the Administrator may deny the credits submitted in whole or in part.

(e) *Credits generated by small refiners.* (1) Notwithstanding the provisions of paragraph (a) of this section, a small refiner that is approved by the EPA as a small refiner under § 80.551(g) may generate credits under § 80.552(b). Such a small refiner may generate one credit for each gallon of motor vehicle diesel fuel produced that is designated under § 80.598 as motor vehicle diesel fuel subject to the 15 ppm sulfur standard under § 80.520(a)(1).

(2)(i) Credits may be generated under this paragraph (e) and § 80.552(b) only during the compliance periods beginning June 1, 2006 and ending on May 31, 2010, however diesel fuel produced after December 31, 2009 shall not generate credits. Credits shall be designated separately by refinery, separately by CTA of generation, and separately by annual compliance period. The annual compliance period for 2006 shall be June 1, 2006 through June 30, 2007. The annual compliance period for 2010 shall be July 1, 2009 through May 31, 2010.

(ii) The small refiner must meet the requirements of paragraphs (d)(1), (d)(2) and (d)(3) of this section, and the recordkeeping and reporting requirements of §§ 80.592, 80.593 and 80.594.

(iii) In addition, a foreign refiner that is approved by the Administrator to generate credits under § 80.552(b) shall comply with the requirements of § 80.620.

[66 FR 5136, Jan. 18, 2001, as amended at 69 FR 39173, June 29, 2004; 70 FR 40895, July 15, 2005; 70 FR 70510, Nov. 22, 2005; 71 FR 25717, May 1, 2006]

§ 80.532 How are motor vehicle diesel fuel credits used and transferred?

(a) *Credit use stipulations.* Motor vehicle diesel fuel credits generated under § 80.531 may be used to meet the volume limit of § 80.530(a)(3) provided that:

(1) The motor vehicle diesel fuel credits were generated and reported according to the requirements of this subpart; and

(2) The conditions of this section are met.

(b) *Use of credits generated under § 80.531.* Motor vehicle diesel fuel credits generated under § 80.531 may be used by a refiner or by an importer to comply with § 80.530 by applying one credit for every gallon of motor vehicle diesel fuel needed to meet compliance with the volume limit of § 80.530(a)(3).

(c) *Credit banking.* Motor vehicle diesel fuel credits generated may be

banked for use or transfer in a later compliance period or may be transferred to another refiner or importer for use as provided in paragraph (d) of this section.

(d) *Credit transfers.* (1) Motor vehicle diesel fuel credits obtained from another refiner or from another importer, including early motor vehicle diesel fuel credits and small refiner motor vehicle diesel fuel credits as described in § 80.531(b) through (e), may be used to satisfy the volume limit of § 80.530(a)(3) if all the following conditions are met:

(i) The motor vehicle diesel fuel credits were generated in the same CTA as the CTA in which motor vehicle diesel fuel credits are used to achieve compliance, except as provided in § 80.531(c)(5);

(ii) The motor vehicle diesel fuel credits are used in compliance with the time period limitations for credit use in this subpart;

(iii) Any credit transfer takes place no later than the August 31 following the compliance period when the motor vehicle diesel fuel credits are used;

(iv) No credit may be transferred more than twice, as follows: The first transfer by the refiner or importer who generated the credit may only be made to a refiner or importer who intends to use the credit; if the transferee cannot use the credit, it may make a second and final transfer only to a refiner or importer who intends to use the credit. In no case may a credit be transferred more than twice before being used or terminated;

(v) The credit transferor must apply any motor vehicle diesel fuel credits necessary to meet the transferor's annual compliance requirements before transferring motor vehicle diesel fuel credits to any other refinery or importer;

(vi) No motor vehicle diesel fuel credits may be transferred that would result in the transferor having a negative credit balance; and

(vii) Each transferor must supply to the transferee records indicating the year the motor vehicle diesel fuel credits were generated, the identity of the refiner (and refinery) or importer who generated the motor vehicle diesel fuel credits, the CTA of credit generation, and the identity of the transferring entity, if it is not the same entity who generated the motor vehicle diesel fuel credits.

(2) In the case of motor vehicle diesel fuel credits that have been calculated or created improperly, or are otherwise determined to be invalid, the following provisions apply:

(i) Invalid motor vehicle diesel fuel credits cannot be used to achieve compliance with the transferee's volume requirements regardless of the transferee's good faith belief that the motor vehicle diesel fuel credits were valid.

(ii) The refiner or importer who used the motor vehicle diesel fuel credits, and any transferor of the motor vehicle diesel fuel credits, must adjust their credit records, reports and compliance calculations as necessary to reflect the proper motor vehicle diesel fuel credits.

(iii) Any properly created motor vehicle diesel fuel credits existing in the transferor's credit balance after correcting the credit balance, and after the transferor applies motor vehicle diesel fuel credits as needed to meet the compliance requirements at the end of the compliance period, must first be applied to correct the invalid transfers before the transferor trades or banks the motor vehicle diesel fuel credits.

(e) *Limitations on credit use.* (1) Motor vehicle diesel fuel credits may not be used to achieve compliance with any requirements of this subpart other than the volume limit of § 80.530(a)(3), unless specifically approved by the Administrator pursuant to a hardship relief petition under § 80.560 or § 80.561.

(2) A refiner or importer possessing motor vehicle diesel fuel credits must use all motor vehicle diesel fuel credits in its possession prior to applying the credit deficit provisions of § 80.530(a)(6).

(3) No motor vehicle diesel fuel credits may be used to meet compliance with this subpart subsequent to the compliance period ending May 31, 2010.

[69 FR 39173, June 29, 2004, as amended at 71 FR 25717, May 1, 2006]

§ 80.533 How does a refiner or importer apply for a motor vehicle or non-highway baseline for the generation of NRLM credits or the use of the NRLM small refiner compliance options?

(a) A refiner or importer wishing to generate credits under § 80.535 or use the small refiner provisions under § 80.554 must submit an application to EPA that includes the information required under paragraph (c) of this section by the dates specified in paragraph (f) of this section. A refiner must apply for a motor vehicle baseline for each refinery in order to generate credits under § 80.535 and apply for a non-highway baseline for each refinery to use the provisions of § 80.554 (a), (b), or (d).

(b) The baseline must be sent to the following address: U.S. EPA—Attn: Nonroad Rule Diesel Fuel Baseline, Transportation and Regional Programs Division (6406J), 1200 Pennsylvania Avenue, NW., Washington, DC 20460 (regular mail) or U.S. EPA, Attn: Nonroad Rule Diesel Fuel Baseline, Transportation and Regional Programs Division (6406J), 1310 L Street, NW., 6th floor, Washington, DC 20005 (express mail).

(c) A baseline application must be submitted for each refinery or import facility and include the following information:

(1) A listing of the names and addresses of all refineries or import facilities owned by the company for which the refiner or importer is applying for a motor vehicle or non-highway baseline.

(2)(i) For purposes of a motor vehicle baseline volume for use in determining early credits per § 80.535(a) and (b) and for purposes of a non-highway baseline volume used in determining compliance with the provisions of § 80.554(a) or (d), the baseline volume produced during the three calendar years beginning January 1, 2003, 2004, and 2005, as calculated under paragraph (e)(1) of this section.

(ii) For purposes of a motor vehicle baseline volume for use in determining early credits per § 80.535(c) and for purposes of a non-highway baseline volume used in determining compliance with the provisions of § 80.554(b), the baseline volumes produced during the three calendar years beginning January 1, 2006, 2007, and 2008, as calculated under paragraph (e)(2) of this section.

(iii) For purposes of a total diesel baseline volume for use in determining compliance with the provisions of § 80.554(d), the baseline volumes of motor vehicle diesel fuel produced during the calendar years beginning January 1, 1998 and 1999 (per §§ 80.595(a) and 80.596(a)); and the baseline volumes of non-highway diesel fuel produced during the three calendar years beginning January 1, 2003, 2004, and 2005. This shall be calculated as stated under paragraph (f) of this section.

(3) A letter signed by the president, chief operating officer of the company, or his/her delegate, stating that the information contained in the motor vehicle or non-highway baseline application is true to the best of his/her knowledge.

(4) Name, address, phone number, facsimile number and e-mail address of a corporate contact person.

(5) For each batch of diesel fuel produced or imported during each calendar year:

(i) The date that production was completed or importation occurred for the batch and the batch designation or classification.

(ii) The batch volume.

(6) Other appropriate information as requested by EPA.

(d) *Calculation of the Motor vehicle Baseline*, B_{MV}. (1) Under paragraph (c)(2)(i) of this section, B_{MV} equals the average annual volume of motor vehicle diesel fuel produced or imported from January 1, 2003 through December 31, 2005.

(2) Under paragraph (c)(2)(ii) of this section, B_{MV} equals the average annual volume of motor vehicle diesel fuel produced or imported during the period from January 1, 2006 through December 31, 2008.

(3) For purposes of this paragraph, fuel produced for export, jet fuel (kerosene), and fuel specifically produced to meet military specifications (such as JP–4, JP–8, and F–76), shall not be included in baseline calculations.

(e) *Calculation of the Non-highway Baseline*, B_{NRLM}. For purposes of this paragraph (e), B_{MV} shall only include the average annual volume of #2D distillate fuel.

(1) Under paragraphs (c)(2)(i) and (c)(2)(iii) of this section, B_{NRLM} equals the average annual volume of all #2D distillate produced or imported from January 1, 2003 through December 31, 2005, less B_{MV} as determined in paragraph (d)(1) of this section.

(2) Under paragraph (c)(2)(ii) of this section, B_{NRLM} equals the average annual volume of MVNRLM produced or imported from January 1, 2006 through December 31, 2008, less B_{MV} as determined in paragraph (d)(2) of this section.

(3) For purposes of this paragraph (e), fuel produced for export, jet fuel, kerosene, and fuel specifically produced to meet military specification (such as JP–4, JP–8, and F–76), shall not be included in baseline calculations.

(f) *Calculation of the Total Diesel Baseline*, B_{MVNRLM}. B_{MVNRLM} equals the sum of B_{MV} (as calculated under § 80.596) plus B_{NRLM} (as calculated under paragraph (e)(1) of this section).

(g)(1) Applications submitted under paragraphs (c)(2)(i) and (c)(2)(iii) of this section must be postmarked by February 28, 2006.

(2) Applications submitted under paragraph (c)(2)(ii) of this section must be postmarked by February 28, 2009.

(h)(1) For applications submitted under paragraphs (c)(2)(i) and (c)(2)(iii) of this section, EPA will notify refiners or importers by June 1, 2006 of approval of the baselines for each of the refiner's refineries or importer's import facilities or of any deficiencies in the refiner's or importer's application.

(2) For applications submitted under paragraph (c)(2)(ii) of this section, EPA will notify refiners or importers by June 1, 2009 regarding approval of the baselines for each of the refiner's refineries or importer's import facilities of any deficiencies in the refiner's or importer's application.

(i) If at any time the motor vehicle baseline or non-highway baseline submitted in accordance with the requirements of this section is determined to be incorrect, EPA will notify the refiner or importer of the corrected baseline and any compliance calculations made on the basis of that baseline will have to be adjusted retroactively.

[69 FR 39174, June 29, 2004, as amended at 70 FR 70510, Nov. 22, 2005; 71 FR 25717, May 1, 2006]

§ 80.534 [Reserved]

§ 80.535 How are NRLM diesel fuel credits generated?

(a) *Generation of high sulfur NRLM credits from June 1, 2006 through May 31, 2007.* (1) During the period June 1, 2006 through May 31, 2007, a refiner or importer may generate credits pursuant to the provisions of this section if all of the following conditions are met:

(i) The refiner or importer notifies EPA of its intention to generate credits and the period during which it will generate credits. This notification must be received by EPA at least 30 calendar days prior to the date it begins generating credits under this section.

(ii) Each batch or partial batch of NRLM diesel fuel for which credits are claimed shall be subject to all of the provisions of this subpart for NRLM diesel fuel as if it had been produced after June 1, 2007 and before June 1, 2010.

(iii) The number of high-sulfur NRLM credits (HSC) that are generated shall be a positive number.

(2) The refiner or importer shall choose one of the following methods for calculating credits for each calculation period.

(i) For fuel that is dyed under the provisions of § 80.520, HSC equals the volume of fuel in gallons produced or imported during the period identified in paragraph (a)(1) of this section that is designated as NRLM diesel fuel and that is subject to and complies with the provisions of § 80.510(a); or

(ii) For dyed or undyed fuel that complies with the provisions of § 80.598 for a calculation period of June 1, 2006 through May 31, 2007, determine HSC as follows:

$$HSC = V_{510} + V_{520} - B_{MV}$$

Where:

V_{510} = The total volume of NRLM diesel fuel produced or imported during the annual calculation period that complies with the standards of § 80.510(a) or (b).

V_{520} = The total volume of motor vehicle diesel fuel produced or imported during the annual calculation period that complies with the standards of § 80.520(a) or (c).
B_{MV} = As calculated in § 80.533(d)(1).

(3) High-sulfur NRLM credits shall be generated and designated as follows:

(i) Credits shall be generated separately for each refiner or importer.

(ii) Credits may not be generated by both a foreign refiner and by an importer for the same motor vehicle diesel fuel.

(iii) Credits shall not be generated under both § 80.531 and this section for the same diesel fuel.

(iv) Any credits generated by a foreign refiner shall be generated as provided in § 80.620(c) and this section.

(4) No credits may be generated under this paragraph (a) after May 31, 2007.

(5) Any fuel for which a refiner or importer wishes to generate credits must be designated as 500 ppm sulfur NRLM diesel fuel when delivered to the next entity. The refiner may not designate the fuel as 500 ppm sulfur with the intent that it be mixed by the next entity with a batch of distillate with a higher sulfur level to create a fuel with a classification other than 500 ppm sulfur or the classification of the fuel it is mixed with (*e.g.*, it cannot mix fuel designated as 500 ppm sulfur with fuel classified as high sulfur to produce a fuel classified as 2000 ppm sulfur to meet state or local sulfur limits).

(6) The refiner or importer must submit a report to the Administrator no later than July 31, 2007. The report must demonstrate that all the NRLM diesel fuel produced or imported which generated credits met the applicable requirements of paragraphs (a)(1) through (a)(5) of this section. If the Administrator finds that such credits did not in fact meet the requirements of paragraphs (a)(1) through (a)(5) of this section, as applicable, or if the Administrator determines that there is insufficient information to determine the validity of such credits, the Administrator may deny the credits submitted in whole or in part.

(b) *Generation of high-sulfur NRLM credits by small refiners from June 1, 2006 through May 31, 2010.* (1) Notwithstanding the dates specified in paragraph (a) of this section, during the period from June 1, 2006 through May 31, 2010, a refiner that is approved by the EPA as a small refiner under § 80.551 may generate credits under paragraph (a) of this section during any compliance period as specified under § 80.599(a)(2) for diesel fuel produced or imported that is designated as NRLM diesel fuel and complies with the provisions of § 80.510(a).

(2) The small refiner must submit a report to the Administrator no later than August 31 after the end of each calculation period during which credits were generated. The report must demonstrate that all the NRLM diesel fuel produced or imported which generated credits met the applicable requirements of paragraphs (a)(1) through (a)(5) of this section. If the Administrator finds that such credits did not in fact meet the requirements of paragraphs (a)(1) through (a)(5) of this section, as applicable, or if the Administrator determines that there is insufficient information to determine the validity of such credits, the Administrator may deny the credits submitted in whole or in part.

(3) In addition, a foreign refiner that is approved by the Administrator to generate credits under § 80.554 shall comply with the requirements of § 80.620.

(c) *Generation of 500 ppm sulfur NRLM credits from June 1, 2009 through May 31, 2010.* (1) During the period of June 1, 2009 through May 31, 2010, a refiner or importer may generate credits pursuant to the provisions of this section if all of the following conditions are met:

(i) The refiner or importer notifies EPA of its intention to generate credits and the period during which it will generate credits. This notification must be received by EPA at least 30 calendar days prior to the date it begins generating credits under this section.

(ii) Each batch or partial batch of NRLM diesel fuel for which credits are claimed shall be subject to all of the provisions of this subpart for NRLM diesel fuel as if it had been produced after June 1, 2010.

(iii) The number of 500 ppm sulfur NRLM credits in gallons that are generated, C_{500}, shall be a positive number calculated as follows:

$$C500 = V_{15} - B_{MV}$$

Where:

V_{15} = The total volume in gallons of 15 ppm diesel fuel produced or imported during the period stated under paragraph (c)(1)(i) of this section that is designated as either motor vehicle diesel fuel or NRLM diesel fuel.

B_{MV} = As determined in § 80.533(d)(2).

(2) 500 ppm sulfur NRLM credits shall be generated and designated as follows:

(i) Credits shall be generated separately for each refiner or importer.

(ii) Credits may not be generated by both a foreign refiner and by an importer for the same diesel fuel.

(iii) Credits shall not be generated under both § 80.531 and this section for the same diesel fuel.

(iv) Any credits generated by a foreign refiner shall be generated as provided in § 80.620(c) and this section.

(3) No credits may be generated under this paragraph (c) after May 31, 2010.

(4) The refiner or importer must submit a report to the Administrator no later than August 31, 2010. The report must demonstrate that all the 15 ppm sulfur NRLM diesel fuel produced or imported which generated credits met the applicable requirements of paragraphs (c)(1) through (c)(3) of this section. If the Administrator finds that such credits did not in fact meet the requirements of paragraphs (c)(1) through (c)(3) of this section, as applicable, or if the Administrator determines that there is insufficient information to determine the validity of such credits, the Administrator may deny the credits submitted in whole or in part.

(d) *Generation of 500 ppm sulfur NRLM credits by small refiners from June 1, 2009 through December 31, 2013.* (1) Notwithstanding the dates specified in paragraph (c) of this section, during the period from June 1, 2009 through December 31, 2013, a refiner that is approved by the EPA as a small refiner under § 80.551 may generate credits under paragraph (c) of this section during any compliance period as specified under § 80.599(a)(2) for diesel fuel produced or imported that is designated as NR or NRLM diesel fuel and complies with the provisions of § 80.510(b) or (c).

(2) The small refiner must submit a report to the Administrator no later than August 31 after the end of each calculation period during which credits were generated. The report must demonstrate that all the 15 ppm sulfur NR or NRLM diesel fuel produced or imported for which credits were generated met the applicable requirements of paragraphs (c)(1) through (c)(3) of this section. If the Administrator finds that such credits did not in fact meet the requirements of paragraphs (c)(1) through (c)(3) of this section, as applicable, or if the Administrator determines that there is insufficient information to determine the validity of such credits, the Administrator may deny the credits submitted in whole or in part.

(3) In addition, a foreign refiner that is approved by the Administrator to generate credits under § 80.554 shall comply with the requirements of § 80.620.

[69 FR 39175, June 29, 2004, as amended at 71 FR 25718, May 1, 2006]

§ 80.536 How are NRLM diesel fuel credits used and transferred?

(a) *Credit use stipulations.* Credits generated under § 80.535(a) and (b) may be used to meet the NRLM diesel fuel sulfur standard of § 80.510(a), and credits generated under 80.535(c) and (d) may be used to meet the NR and NRLM diesel fuel sulfur standard of 80.510(b) and (c), respectively, provided that:

(1) The credits were generated and reported according to the requirements of this subpart; and

(2) The conditions of this section are met.

(b) *Using credits generated under § 80.535.* Credits generated under § 80.535 may be used by a refiner or an importer to comply with the diesel fuel standards of § 80.510 (a), (b), and (c) by applying one credit for every gallon of diesel fuel that does not comply with the applicable standard.

(c) *Credit banking.* Credits generated may be banked for use at a later time or may be transferred to any other refiner or importer nationwide for use as

provided in paragraph (d) of this section.

(d) *Credit transfers.* (1) Credits generated under § 80.535 that are obtained from another refiner or importer may be used to comply with the diesel fuel sulfur standards of § 80.510(a), (b), and (c) if all the following conditions are met:

(i) The credits are used in compliance with the time period limitations for credit use in this subpart;

(ii) Any credit transfer is completed no later than August 31 following the compliance period when the credits are used to comply with a standard under paragraph (a) of this section;

(iii) No credit is transferred more than twice, as follows:

(A) The first transfer by the refiner or importer who generated the credit may only be made to a refiner or importer that intends to use the credit; if the transferee cannot use the credit, it may make a second and final transfer only to a refiner or importer who intends to use the credit; and

(B) In no case may a credit be transferred more than twice before it is used or it expires;

(iv) The credit transferor applies any credits necessary to meet the transferor's annual compliance requirements before transferring credits to any other refinery or importer;

(v) No credits are transferred that would result in the transferor having a negative credit balance; and

(vi) Each transferor supplies to the transferee records indicating the year the credits were generated, the identity of the refiner (and refinery) or importer that generated the credits, and the identity of the transferor, if it is not the same party that generated the credits.

(2) In the case of credits that have been calculated or created improperly, or are otherwise determined to be invalid, the following provisions apply:

(i) Invalid credits cannot be used to achieve compliance with the transferee's volume requirements regardless of the transferee's good faith belief that the credits were valid.

(ii) The refiner or importer that used the credits, and any transferor of the credits, must adjust its credit records, reports and compliance calculations as necessary to reflect the proper credits.

(iii) Any properly created credits existing in the transferor's credit balance after correcting the credit balance, and after the transferor applies credits as needed to meet the compliance requirements at the end of the calendar year, must first be applied to correct the invalid transfers before the transferor trades or banks the credits.

(e) *General limitation on credit use.* Credits may not be used to achieve compliance with any requirements of this subpart other than the standards of § 80.510(a), (b), and (c), unless specifically approved by the Administrator pursuant to a hardship relief petition under § 80.560 or § 80.561.

(f) *Use of high sulfur NRLM credits.* (1) High sulfur NRLM credits generated under § 80.535(a) or (b) may be used on a one-for-one basis to meet the NRLM diesel fuel sulfur standard of § 80.510(a) from June 1, 2007 through May 31, 2010. For example, one credit generated by the production or importation of one gallon of NRLM diesel fuel subject to the NRLM diesel fuel sulfur standard of § 80.510 (a) may be used to produce or import one gallon of NRLM diesel fuel that is exempt from the sulfur standard of § 80.510(a) during the period from June 1, 2007 through May 31, 2010.

(2) Any high sulfur NRLM diesel fuel produced after June 1, 2007 through the use of credits must—

(i) Be dyed red under the provisions of § 80.520 at the point of production or importation;

(ii) Be associated with a product transfer document that bears a unique product code as specified in § 80.590; and

(iii) Not be used to sell or deliver diesel fuel into areas specified in § 80.510(g)(1) or (g)(2).

(3) No high sulfur NRLM credits may be used subsequent to the compliance period ending May 31, 2010.

(4) Any high sulfur NRLM credits not used under the provisions of paragraph (f)(1) of this section may be converted into 500 ppm sulfur NRLM credits on a one-for-one basis for use under paragraph (g) of this section.

(g) *Use of 500 ppm sulfur NRLM credits.* (1) 500 ppm sulfur NRLM credits generated under § 80.535(c) or (d) or converted from high sulfur NRLM credits

under paragraph (f)(3) of this section may be used on a one-for-one basis to meet the NR or NRLM diesel fuel sulfur standards of § 80.510(b) or (c) from June 1, 2010 through May 31, 2014. For example, one credit generated by the production or importation of one gallon of NRLM diesel fuel subject to the NRLM diesel fuel sulfur standard of § 80.510 (c) may be used to produce or import one gallon of NR diesel fuel that is subject to the sulfur standard of § 80.510(a) during the period from June 1, 2010 through May 31, 2014.

(2) Any 500 ppm sulfur NR or NRLM diesel fuel produced or imported after June 1, 2010 through the use of these credits must—

(i) Bear a unique product code as specified in § 80.590; and

(ii) Not be used to sell or deliver diesel fuel into areas specified in § 80.510(g)(1) or (g)(2).

(3) No 500 ppm sulfur NRLM credits may be used after May 31, 2014.

[69 FR 39176, June 29, 2004]

§§ 80.537–80.539 [Reserved]

GEOGRAPHIC PHASE-IN PROVISIONS

§ 80.540 How may a refiner be approved to produce gasoline under the GPA gasoline sulfur standards in 2007 and 2008?

(a) A refiner that has been approved by EPA under § 80.217 for the geographic phase-in area (GPA) gasoline sulfur content standards under § 80.216 may apply to EPA for approval to produce gasoline subject to the GPA standards in 2007 and 2008. Such application shall be submitted to EPA, at the address provided in § 80.595(b), by December 31, 2001. A foreign refiner must apply under the provisions of paragraph (n) of this section.

(b) The refiner must submit an application in accordance with the provisions of §§ 80.595 and 80.596. The application must also include information, as provided in § 80.594(c), demonstrating that starting no later than June 1, 2006, 95 percent of the motor vehicle diesel fuel produced by the refinery for United States use will comply with the 15 ppm sulfur standard under § 80.520(a)(1), and that the volume of motor vehicle diesel fuel produced will comply with the volume requirements of paragraph (e) of this section.

(c) The Administrator may approve a refiner's application to produce gasoline subject to the GPA gasoline sulfur content standards in 2007 and 2008 if the provisions of paragraph (b) of this section are satisfied. In approving an application, the Administrator shall establish a motor vehicle diesel fuel volume baseline under §§ 80.595 and 80.596.

(d) From June 1, 2006 through December 31, 2008, 95 percent of the motor vehicle diesel fuel produced by a refiner that has been approved under paragraph (c) of this section to produce gasoline subject to the GPA gasoline sulfur standards in 2007 and 2008, must be accurately designated under § 80.598 as meeting the 15 ppm sulfur standard of § 80.520(a)(1).

(e) The total volume of motor vehicle diesel fuel produced for use in the United States and designated as meeting the 15 ppm sulfur standard under paragraph (d) of this section must meet or exceed 85 percent of the baseline volume established under paragraph (c) of this section, except that for the first compliance period from June 1, 2006 through June 30, 2007, the total volume must meet or exceed 92 percent of the baseline volume.

(f) Compliance with the volume requirements in paragraph (e) of this section shall be determined each compliance period. Annual compliance periods shall be from July 1 through June 30. For the year 2006, the compliance period shall be from June 1, 2006 through June 30, 2007.

(g) If a refiner fails to comply with the requirements of paragraph (d) of this section, or if the approval of the application, including the baseline, was based on false or inaccurate information, the approval to produce gasoline subject to the GPA gasoline sulfur content standards under this section during the years 2007 and 2008 shall be void ab initio, and gasoline produced for use in the GPA must meet the gasoline sulfur content standards of subpart H of this Part as if there had been no approval to produce gasoline subject to the GPA gasoline sulfur content standards in 2007 and 2008.

(h) If for any compliance period a refiner fails to meet the volume requirements in paragraph (e) of this section, the approval to produce gasoline subject to the GPA gasoline sulfur content standards shall be void for that compliance period and for all succeeding compliance periods, and gasoline produced for use in the GPA must meet the gasoline sulfur standards under subpart H of this subpart as if there had been no approval to produce gasoline subject to the GPA gasoline sulfur content standards under this section in 2007 and 2008.

(i) A refiner that is approved for production of gasoline subject to the GPA gasoline sulfur standards under this section in 2007 and 2008 must meet all applicable recordkeeping and reporting requirements of §§ 80.592, 80.593, and 80.594, and shall meet all the recordkeeping and reporting requirements under §§ 80.219, 80.365 and 80.370.

(j) A refiner approved to produce gasoline subject to the GPA gasoline sulfur standards under this section in 2007 and 2008 may not generate or use credits under § 80.531(a) or (e), or § 80.532 unless the approval is vacated as provided in paragraph (k) of this section.

(k) A refiner may petition the Administrator to vacate approval to produce gasoline subject to the GPA gasoline sulfur content standards in 2007 and 2008. EPA may grant such a petition, effective January 1 of the compliance period following EPA's receipt of such petition (or effective June 1, in 2006, if applicable). Upon such effective date and thereafter, gasoline produced for use in the GPA must meet the gasoline sulfur content standards under subpart H of this Part as if there had been no approval to produce gasoline subject to the GPA gasoline sulfur content standards under this section in 2007 and 2008. Upon such effective date, the refiner shall not be subject to the requirements of this section.

(l) The provisions of this section shall apply separately for each refinery of a refiner.

(m) If any refinery is approved for production of gasoline subject to GPA gasoline sulfur content standards under this section in 2007 and 2008, the GPA downstream gasoline sulfur standard under § 80.220(a)(2) shall apply as follows:

(1) During the period of February 1, 2005 through January 31, 2009, the sulfur content of GPA gasoline at any downstream location other than at a retail outlet or wholesale purchaser-consumer facility shall not exceed 326 ppm.

(2) During the period of March 1, 2005 through February 28, 2009, the sulfur content of GPA gasoline at any downstream location shall not exceed 326 ppm.

(n) A foreign refiner may apply to the Administrator to produce gasoline that is subject to the gasoline sulfur standards for GPA gasoline under § 80.216 for the compliance years 2007 and 2008. Such application must be submitted to the EPA, at the address in § 80.595(b), by December 31, 2001.

(1) The Administrator may approve such interim GPA gasoline sulfur standards for the foreign refiner provided that the foreign refiner applies for a gasoline sulfur baseline under paragraph (n)(2) of this section and complies with:

(i) The requirements of paragraphs (b) through (l) of this section;

(ii) The requirements for the import of motor vehicle diesel fuel under § 80.620; and

(iii) All applicable gasoline requirements for refiners under subpart H of this Part, including the foreign refiner requirements under § 80.410, the attest requirements of § 80.415, the recordkeeping and reporting requirements of §§ 80.365 and 80.370, the designation and product transfer document requirements of § 80.219, the sampling and testing requirements of § 80.330, and the sample retention requirements of § 80.335.

(2) The refiner must submit an application for a gasoline sulfur baseline under the provisions of §§ 80.216(a), 80.295, and 80.410(b).

(3) After review of the foreign refiner's individual refinery gasoline sulfur baseline, its individual refinery motor vehicle diesel fuel baseline, and other information submitted with the application, the Administrator may approve such baselines and the application for GPA gasoline sulfur standards for 2007 and 2008.

(o) An importer is not eligible for approval to import gasoline subject to

the GPA standards in 2007 or 2008 under this section.

[66 FR 5136, Jan. 18, 2001, as amended at 69 FR 39177, June 29, 2004]

§§ 80.541–80.549 [Reserved]

SMALL REFINER HARDSHIP PROVISIONS

§ 80.550 What is the definition of a motor vehicle diesel fuel small refiner or a NRLM diesel fuel small refiner under this subpart?

(a) A motor vehicle diesel fuel small refiner is defined as any person, as defined by 42 U.S.C. 7602(e), who—

(1) Produces diesel fuel at a refinery by processing crude oil through refinery processing units; and

(2) Employed an average of no more than 1,500 people, based on the average number of employees for all pay periods from January 1, 1999, to January 1, 2000; and

(3) Had an average crude oil capacity less than or equal to 155,000 barrels per calendar day (bpcd) for 1999; or

(4) Has been approved by EPA as a small refiner under § 80.235 and continues to meet the criteria of a small refiner under § 80.225.

(b) A NRLM diesel fuel small refiner is defined as any person, as defined by 42 U.S.C. 7602(e), who—

(1) Produces diesel fuel at a refinery by processing crude oil through refinery processing units;

(2) Employed an average of no more than 1,500 people, based on the average number of employees for all pay periods from January 1, 2002, to January 1, 2003; and

(3) Had an average crude oil capacity less than or equal to 155,000 barrels per calendar day (bpcd) for 2002.

(c) Determine the number of employees and crude oil capacity under paragraphs (a) or (b) of this section, as follows:

(1) The refiner shall include the employees and crude oil capacity of any subsidiary companies, any parent company and subsidiaries of the parent company in which the parent has 50 percent or greater ownership, and any joint venture partners.

(2) For any refiner owned by a governmental entity, the number of employees and total crude oil capacity as specified in paragraph (a) of this section shall include all employees and crude oil production of the government to which the governmental entity is a part.

(3) Any refiner owned and controlled by an Alaska Regional or Village Corporation organized pursuant to the Alaska Native Claims Settlement Act (43 U.S.C. 1601) is not considered an affiliate of such entity, or with other concerns owned by such entity solely because of their common ownership.

(d)(1) Notwithstanding the provisions of paragraph (a) of this section, a refiner that acquires or reactivates a refinery that was shut down or non-operational between January 1, 1999, and January 1, 2000, may apply for motor vehicle diesel fuel small refiner status in accordance with the provisions of § 80.551(c)(1)(ii).

(2) Notwithstanding the provisions of paragraph (b) of this section, a refiner that acquires or reactivates a refinery that was shutdown or non-operational between January 1, 2002, and January 1, 2003, may apply for NRLM diesel fuel small refiner status in accordance with the provisions of § 80.551(c)(2)(ii).

(e) The following are ineligible for the small refiner provisions:

(1)(i) For motor vehicle diesel fuel, refiners with refineries built or started up after January 1, 2000.

(ii) For NRLM diesel fuel, refiners with refineries built or started up after January 1, 2003.

(2)(i) For motor vehicle diesel fuel, persons who exceed the employee or crude oil capacity criteria under this section on January 1, 2000, but who meet these criteria after that date, regardless of whether the reduction in employees or crude oil capacity is due to operational changes at the refinery or a company sale or reorganization.

(ii) For NRLM diesel fuel, persons who exceed the employee or crude oil capacity criteria under this section on January 1, 2003, but who meet these criteria after that date, regardless of whether the reduction in employees or crude oil capacity is due to operational changes at the refinery or a company sale or reorganization.

(3) Importers.

(4) Refiners who produce motor vehicle diesel fuel or NRLM diesel fuel

other than by processing crude oil through refinery processing units.

(f)(1)(i) Refiners who qualify as motor vehicle diesel fuel small refiners under this section and subsequently cease production of diesel fuel from processing crude oil through refinery processing units, or employ more than 1,500 people or exceed the 155,000 bpcd crude oil capacity limit after January 1, 2004 as a result of merger with or acquisition of or by another entity, are disqualified as small refiners, except as provided for under paragraph (f)(4) of this section. If disqualification occurs, the refiner shall notify EPA in writing no later than 20 days following this disqualifying event.

(ii) Except as provided under paragraph (f)(3) of this section, any refiner whose status changes under this paragraph shall meet the applicable standards of § 80.520 within a period of up to 30 months from the disqualifying event for any of its refineries that were previously subject to the small refiner standards of § 80.552, but no later than the May 31, 2010.

(2)(i) Refiners who qualify as NRLM diesel fuel small refiners under this section and subsequently cease production of diesel fuel from crude oil, or employ more than 1,500 people or exceed the 155,000 bpcd crude oil capacity limit after January 1, 2004 as a result of merger with or acquisition of or by another entity, are disqualified as small refiners, except as provided for under paragraph (f)(4) of this section. If disqualification occurs, the refiner shall notify EPA in writing no later than 20 days following this disqualifying event.

(ii) Except as provided under paragraph (f)(3) of this section, any refiner whose status changes under this paragraph shall meet the applicable standards of § 80.510 within a period of up to 30 months of the disqualifying event for any of its refineries that were previously subject to the small refiner standards of § 80.552, but no later than the dates specified in § 80.554(a) or (b), as applicable.

(3) A refiner may apply to EPA for up to an additional six months to comply with the standards of § 80.510 or § 80.520 if more than 30 months would be required for the necessary engineering, permitting, construction, and start-up work to be completed. Such applications must include detailed technical information supporting the need for additional time. EPA will base a decision to approve additional time on information provided by the refiner and on other relevant information. In no case will EPA extend the compliance date beyond May 31, 2010 for a motor vehicle diesel fuel small refiner or beyond the dates specified in § 80.554(a) or (b), as applicable, for a NRLM diesel fuel small refiner.

(4) Disqualification under paragraphs (f)(1) or (f)(2) of this section shall not apply in the case of a merger between two previously approved small refiners.

(5) During the period of time up to 30 months provided under paragraph (f)(1)(ii) of this section, and any extension provided under paragraph (f)(3) of this section, the refiner may not generate motor vehicle diesel fuel sulfur credits under § 80.531(e). During the period of time up to 30 months provided under paragraph (f)(2)(ii) of this section, and any extension provided under paragraph (f)(3) of this section, the refiner may not generate NRLM diesel fuel sulfur credits under § 80.535(b) or (d).

(g) Notwithstanding the criteria in paragraph (a) of this section, any small refiner that has been approved by EPA as a small refiner under § 80.235 and meets the criteria of paragraph (a)(1) of this section, will be considered a small refiner under this section as well, for as long as they are a small refiner under § 80.225. The provisions of paragraph (f) of this section apply to any such refiner.

[66 FR 5136, Jan. 18, 2001, as amended at 69 FR 39177, June 29, 2004; 70 FR 40896, July 15, 2005]

§ 80.551 How does a refiner obtain approval as a small refiner under this subpart?

(a)(1)(i) Applications for motor vehicle diesel fuel small refiner status must be submitted to EPA by December 31, 2001.

(ii) Applications for NRLM diesel fuel small refiner status must be submitted to EPA by December 31, 2004.

(2)(i) In the case of a refiner who acquires or reactivates a refinery that

was shutdown or non-operational between January 1, 1999, and January 1, 2000, the application for motor vehicle diesel fuel small refiner status must be submitted to EPA by June 1, 2003.

(ii) In the case of a refiner who acquires or reactivates a refinery that was shutdown or non-operational between January 1, 2002, and January 1, 2003, the application for NRLM diesel fuel small refiner status must be submitted to EPA by June 1, 2006.

(b) Applications for small refiner status must be sent via certified mail with return receipt or express mail with return receipt to: U.S. EPA—Attn: Diesel Small Refiner Status (6406J), 1200 Pennsylvania Avenue, NW., Washington, DC 20460 (certified mail/return receipt) or Attn: Diesel Small Refiner Status, Transportation and Regional Programs Division, 1310 L Street, NW., 6th floor, Washington, DC 20005 (express mail/return receipt).

(c) The small refiner status application must contain the following information for the company seeking small refiner status, plus any subsidiary companies, any parent company and subsidiaries of the parent company in which the parent has 50 percent or greater ownership, and any joint venture partners:

(1) For motor vehicle diesel fuel small refiners—

(i) A listing of the name and address of each location where any employee worked during the 12 months preceding January 1, 2000; the average number of employees at each location based upon the number of employees for each pay period for the 12 months preceding January 1, 2000; and the type of business activities carried out at each location; or

(ii) In the case of a refiner who acquires or reactivates a refinery that was shutdown or non-operational between January 1, 1999, and January 1, 2000, a listing of the name and address of each location where any employee of the refiner worked since the refiner acquired or reactivated the refinery; the average number of employees at any such acquired or reactivated refinery during each calendar year since the refiner acquired or reactivated the refinery; and the type of business activities carried out at each location.

(2) For NRLM diesel fuel small refiners—

(i) A listing of the name and address of each location where any employee worked during the 12 months preceding January 1, 2003; the average number of employees at each location based upon the number of employees for each pay period for the 12 months preceding January 1, 2003; and the type of business activities carried out at each location; or

(ii) In the case of a refiner who acquires or reactivates a refinery that was shutdown or non-operational between January 1, 2002, and January 1, 2003, a listing of the name and address of each location where any employee of the refiner worked since the refiner acquired or reactivated the refinery; the average number of employees at any such acquired or reactivated refinery during each calendar year since the refiner acquired or reactivated the refinery; and the type of business activities carried out at each location.

(3) The total corporate crude oil capacity of each refinery as reported to the Energy Information Administration (EIA) of the U.S. Department of Energy (DOE) for the most recent 12 months of operation. The information submitted to EIA is presumed to be correct. In cases where a company disagrees with this information, the company may petition EPA with appropriate data to correct the record when the company submits its application for small refiner status. EPA may accept such alternate data at its discretion.

(4) For motor vehicle diesel fuel, an indication of whether the refiner, for each refinery, is applying for—

(i) The ability to produce motor vehicle diesel fuel subject to the 500 ppm sulfur standard under § 80.520(c) or generate credits under § 80.531, pursuant to the provisions of § 80.552(a) or (b); or

(ii) An extension of the duration of its small refiner gasoline sulfur standard under § 80.553, pursuant to the provisions of § 80.552(c).

(5) For NRLM diesel fuel, an indication of whether the refiner, for each refinery, is applying for—

(i) The ability to delay compliance under § 80.554(a) or (b), or to generate NRLM diesel sulfur credits under

§ 80.535(b) or (d), pursuant to the provisions of § 80.554(c); or

(ii) An adjustment to its small refiner gasoline sulfur standards under § 80.240(a), pursuant to the provisions of § 80.554(d).

(6) A letter signed by the president, chief operating or chief executive officer of the company, or his/her designee, stating that the information contained in the application is true to the best of his/her knowledge.

(7) Name, address, phone number, facsimile number and e-mail address (if available) of a corporate contact person.

(d) For joint ventures, the total number of employees includes the combined employee count of all corporate entities in the venture.

(e) For government-owned refiners, the total employee count includes all government employees.

(f) Approval of small refiner status for refiners who apply under § 80.550(d) will be based on all information submitted under paragraph (c) of this section, except as provided in § 80.550(e).

(g) EPA will notify a refiner of approval or disapproval of small refiner status by letter. If disapproved, the refiner must comply with the sulfur standards in § 80.510 or 80.520, as appropriate, except as otherwise provided in this subpart.

(h) If EPA finds that a refiner provided false or inaccurate information on its application for small refiner status, upon notice from EPA the refiner's small refiner status will be void *ab initio*.

(i) Upon notification to EPA, an approved small refiner may withdraw its status as a small refiner. Effective on January 1 of the year following such notification, the small refiner will become subject to the sulfur standards in § 80.510 or 80.520, as appropriate, unless one of the other hardship provisions of this subpart apply.

[69 FR 39178, June 29, 2004, as amended at 70 FR 40896, July 15, 2005; 75 FR 22970, Apr. 30, 2010]

§ 80.552 What compliance options are available to motor vehicle diesel fuel small refiners?

(a) A refiner that has been approved by EPA as a motor vehicle diesel fuel small refiner under § 80.551(g) may produce motor vehicle diesel fuel subject to the 500 ppm sulfur standard pursuant to the provisions of § 80.530, except that the volume limits of § 80.530(a)(3) shall only apply to that volume of diesel fuel that is produced or imported during an annual compliance period that exceeds 105 percent of the baseline volume established under § 80.595 (V_{500}). The annual compliance period shall be from July 1 through June 30. For the year 2006, the compliance period shall be from June 1, 2006 through June 30, 2007, and the volume limits shall only apply to that volume V_{500} that exceeds 113 percent of the baseline volume.

(b) A refiner that has been approved by EPA as a motor vehicle diesel fuel small refiner under § 80.551(g) may generate motor vehicle diesel fuel credits pursuant to the provisions of § 80.531, except that for purposes of § 80.531(a), the term ''Credit'' shall equal V_{15}, without further adjustment.

(c) A refiner that has been approved by EPA as a motor vehicle diesel fuel small refiner under § 80.551(g) may apply for an extension of the duration of its small refiner gasoline sulfur standards pursuant to § 80.553.

(d) A refiner that produces motor vehicle diesel fuel under the provisions of paragraph (a) of this section or generates credits under the provisions of paragraph (b) of this section may not receive an extension of its small refiner gasoline sulfur standard under the provisions of paragraph (c) of this section. A refiner that receives an extension of its small refiner gasoline sulfur standard under the provisions of paragraph (c) of this section may not produce motor vehicle diesel fuel under the provisions of paragraph (a) of this section and may not generate credits under the provisions of paragraph (b) of this section.

(e) The provisions of this section shall apply separately for each refinery owned or operated by a motor vehicle diesel fuel small refiner.

[66 FR 5136, Jan. 18, 2001, as amended at 69 FR 39179, June 29, 2004]

§ 80.553 Under what conditions may the small refiner gasoline sulfur standards be extended for a small refiner of motor vehicle diesel fuel?

(a) A refiner that has been approved by EPA for small refiner gasoline sulfur standards under § 80.240 may apply, under § 80.551, for an extension of the duration of its small refiner gasoline sulfur standards through the calendar year 2010 annual averaging period.

(b) As part of its application, the refiner must submit an application for a motor vehicle diesel fuel baseline in accordance with the provisions of §§ 80.595 and 80.596. The application must also include information, as provided in § 80.594, demonstrating that starting no later than June 1, 2006, 95 percent of the motor vehicle diesel fuel produced by the refiner will comply with the 15 ppm sulfur content standard under § 80.520(a)(1), and that the volume of motor vehicle diesel fuel produced will comply with the volume requirements of paragraph (e) of this section.

(c) The Administrator may approve an application for extension of the small refiner gasoline sulfur standards if the provisions of paragraph (b) of this section and §§ 80.595 and 80.596 are satisfied. In approving an application for extension, the Administrator shall establish a motor vehicle diesel fuel volume baseline under §§ 80.595 and 80.596.

(d) Beginning June 1, 2006, and continuing through December 31, 2010, 95 percent of the motor vehicle diesel fuel produced by a refiner that has received an extension of its small refiner gasoline sulfur standards under this section must be accurately designated under § 80.598 as meeting the 15 ppm sulfur content standard under § 80.520(a)(1).

(e) The total volume of motor vehicle diesel fuel produced for use in the United States and designated as meeting the 15 ppm sulfur content standard under paragraph (d) of this section must meet or exceed 85 percent of the baseline volume established under paragraph (c) of this section, except that for the first compliance period from June 1, 2006 through June 30, 2007, the total volume must meet or exceed 92 percent of the baseline volume.

(f) Compliance with the volume requirements in paragraph (e) of this section shall be determined each compliance period. Annual compliance periods shall be from July 1 through June 30. For the year 2006, the compliance period shall be from June 1, 2006 through June 30, 2007 and for the year 2009 the compliance period shall be from July 1, 2009 through May 31, 2010.

(g) If a refiner fails to comply with the requirements of paragraph (d) of this section, or if approval of the application, including the baseline, was based on false or inaccurate information, the extension of the applicable small refiner gasoline sulfur standards under this section shall be void ab initio, and all gasoline produced by the refinery must meet the gasoline sulfur standards under subpart H of this Part as if there had been no extension of the small refiner gasoline sulfur standards.

(h) If for any compliance period a refiner fails to meet the volume requirements in paragraph (e) of this section, the extension of the small refiner gasoline sulfur standards shall be void for that compliance period and for all succeeding compliance periods and all gasoline produced by the refinery must meet the gasoline sulfur standards under subpart H of this part as if there had been no extension of the small refiner gasoline sulfur standards under this section for such compliance periods.

(i) A refiner that is approved for an extension of the interim small refiner gasoline sulfur standards under this section must meet all applicable recordkeeping and reporting requirements of §§ 80.592, 80.593, and 80.594, and shall meet all the recordkeeping and reporting requirements under §§ 80.210, 80.365 and 80.370. Any foreign refiner shall meet all additional requirements under §§ 80.620 and 80.410.

(j) A refiner approved for the small refiner gasoline sulfur standards extension under this section may not generate or use credits under § 80.531(a) or (e), or § 80.532.

(k) A refiner may petition the Administrator to vacate an extension of the small refiner gasoline sulfur content standards. EPA may grant such a petition, effective July 1 of the compliance period following receipt of such petition (or effective June 1, 2006, if applicable). Upon such effective date, all

gasoline produced by the refiner must meet the gasoline sulfur content standards under subpart H of this part as if there had been no extension of the small refiner gasoline sulfur content standards under this section. Upon such effective date, the refiner shall not be subject to the requirements of this section.

(l) The provisions of this section shall apply separately for each refinery of a refiner.

[66 FR 5136, Jan. 18, 2001, as amended at 69 FR 39179, June 29, 2004; 71 FR 25718, May 1, 2006]

§ 80.554 What compliance options are available to NRLM diesel fuel small refiners?

(a) *Option 1:* A refiner that has been approved by EPA as a NRLM diesel fuel small refiner under § 80.551(g) may produce NRLM diesel fuel from crude oil from June 1, 2007 through May 31, 2010, that is exempt from the standards under § 80.510(a), but only for a refinery located outside the areas specified under § 80.510(g)(1).

(1) The volume of NRLM diesel fuel that is exempt from § 80.510(a) must be less than or equal to 105 percent of B_{NRLM} as defined under § 80.533, less any volume of heating oil produced.

(2) Any volume of NRLM diesel fuel in excess of the volume allowed under (a)(1) of this section will be subject to the 500 ppm sulfur standard under § 80.510(a).

(3) High-sulfur NRLM produced under this paragraph must—

(i) Be dyed red pursuant to the provisions of § 80.520 at the point of production or importation;

(ii) Be associated with a product transfer document that bears a unique product code as specified under § 80.590; and

(iii) Not be delivered into areas specified under § 80.510(g)(1).

(4) From June 1, 2007 through May 31, 2010, a refiner that has been approved by EPA as a NRLM diesel fuel small refiner under § 80.551(g) may produce at a refinery located in 80.510(g)(2) NRLM diesel fuel that is exempt from the standards under § 80.510(a) only if the refiner first obtains approval from the Administrator for a compliance plan. The compliance plan must detail how the refiner will segregate any fuel produced that does not meet the standards under § 80.510(a) from the refinery through to the ultimate consumer from fuel having any other designations and from fuel produced by any other refiner. The compliance plan must also identify all ultimate consumers to whom the refiner supplies the fuel that does not meet the standards under § 80.510(a).

(b) *Option 2:* A refiner that has been approved by EPA as a NRLM diesel fuel small refiner under § 80.551(g) may produce NR diesel fuel from crude oil from June 1, 2010, through May 31, 2014, and NRLM diesel fuel from crude oil from June 1, 2012 through May 31, 2014 that is subject to the standards under § 80.510(a), but only for a refinery located outside the areas specified under § 80.510(g)(1).

(1) The volume of NR diesel fuel that may be subject to the 500 ppm sulfur standard from June 1, 2010 through June 30, 2011 must be less than or equal to 113 percent of B_{NRLM}, and from July 1, 2011 through May 31, 2012 must be less than or equal to 96 percent of B_{NRLM}, as defined under § 80.533, less any volume of locomotive and marine diesel fuel produced.

(2) The volume of NRLM diesel fuel that may be subject to the 500 ppm sulfur standard from June 1, 2012 through June 30, 2013 must be less than or equal to 113 percent of B_{NRLM}, and from July 1, 2013 through May 31, 2014 must be less than or equal to 96 percent of B_{NRLM}, as defined under § 80.533.

(3) NRLM diesel fuel produced in excess of the volume allowed under paragraph (b)(1) of this section will be subject to the standards under § 80.510(b) and (c).

(4) 500 ppm sulfur NRLM diesel fuel produced under this paragraph must—

(i) Bear a unique product code as specified under § 80.590; and

(ii) Not be sold or delivered into areas specified under § 80.510(g)(1).

(5) From June 1, 2010 through May 31, 2012, for NR diesel fuel, and from June 1, 2012 through May 31, 2014 for NRLM diesel fuel, a refiner that has been approved by EPA as a NRLM diesel fuel small refiner under § 80.551(g) may

produce, at a refinery located in Alaska, NR and NRLM diesel fuel, as applicable, from crude oil that is subject to the standards of § 80.510(a), only if the refiner first obtains approval from the Administrator for a compliance plan. The compliance plan must detail how the refiner will segregate any fuel produced subject to the standards under § 80.510(a) from the refinery through to the ultimate consumer from fuel having any other designations and from fuel produced by any other refiner. The compliance plan must also identify all ultimate consumers to whom the refiner supplies the fuel that does not meet the standards under § 80.510(a).

(c) *Option 3:* A refiner that has been approved by EPA as a NRLM diesel fuel small refiner under § 80.551(g) may generate diesel fuel credits under the provisions of § 80.535(b) and (d), except as provided in paragraph (d)(1) of this section.

(d) *Option 4:* (1) In lieu of Options 1, 2, and 3 of this section, a refiner that has been approved by EPA as a NRLM diesel fuel small refiner under § 80.551(g) may choose to adjust its small refiner gasoline sulfur standards, subject to the following conditions:

(i) From June 1, 2006 until the expiration of the refiner's small refiner gasoline sulfur standards (through December 31, 2007 or 2010) 95 percent of the total MVNRLM diesel fuel produced by the refiner must be accurately designated under § 80.598(a) as meeting the 15 ppm sulfur standard of § 80.510(b).

(ii) The refiner must produce MVNRLM diesel fuel each year or partial year under paragraph (d)(1)(i) of this section at a volume that is equal to or greater than 85 percent of B_{MVNRLM}, as defined in § 80.533, calculated on an annual basis.

(2)(i) For a refiner meeting the conditions of paragraph (d)(1) of this section, beginning January 1, 2004, the applicable small refiner's annual average and per-gallon cap gasoline sulfur standards will be the standards of § 80.240(a) increased by a factor of 1.20 for the duration of the refiner's small refiner gasoline sulfur standards under § 80.240(a) or § 80.553 (*i.e.,* through calendar years 2007 or 2010).

(ii) In no case may the per-gallon cap exceed 450 ppm.

(3)(i) If the refiner fails to produce the necessary volume of 15 ppm sulfur MVNRLM diesel fuel by June 1, 2006 and every year thereafter through the deadlines specified under paragraph (d)(1)(i) of this section, the refiner must report this in its annual report under § 80.604, and the adjustment of gasoline sulfur standards under paragraph (d)(2)(i) of this section will be considered void as of January 1, 2004.

(ii) If such a refiner had produced gasoline above its interim gasoline sulfur standard of § 80.240(a) prior to June 1, 2006, such fuel will not be considered in violation of the small refiner standards under § 80.240(a), provided the refiner obtains and uses a quantity of gasoline sulfur credits equal to the volume of gasoline exceeding the small refiner standards multiplied by the number of parts per million by which the gasoline exceeded the small refiner standards.

(e) *Multiple refineries.* The provisions of this section shall apply separately for each refinery owned or operated by a NRLM diesel fuel small refiner.

(f) *Other provisions.* From June 1, 2007 through May 31, 2010, a refiner who is an approved motor vehicle diesel fuel small refiner under § 80.550(a) but does not qualify as a NRLM diesel fuel small refiner under § 80.550(b) may produce NRLM diesel fuel that is exempt from the per-gallon sulfur standard and the cetane or aromatics standard of § 80.510(a). This exemption does not apply to diesel fuel sold or intended for sale in the areas listed in § 80.510(g)(1) or (g)(2). From June 1, 2010 through May 31, 2012, NR and LM diesel fuel produced by such refiners is subject to the standards under § 80.510(b) and beginning June 1, 2012, all NRLM diesel fuel is subject to the standards under § 80.510(c).

[69 FR 39179, June 29, 2004, as amended at 71 FR 25718, May 1, 2006]

§ 80.555 What provisions are available to a large refiner that acquires a small refiner or one or more of its refineries?

(a) In the case of a refiner without approved small refiner status who acquires a refinery from a refiner with approved status as a motor vehicle diesel fuel small refiner or a NRLM diesel

fuel small refiner under § 80.551(g), the applicable small refiner provisions of §§ 80.552 and 80.554 may apply to the acquired refinery for a period of up to 30 months from the date of acquisition of the refinery. In no case shall this period extend beyond May 31, 2010 for a refinery acquired from a motor vehicle diesel fuel small refiner or beyond the dates specified in § 80.554(a) or (b), as applicable, for a refinery acquired from a NRLM diesel fuel small refiner.

(b) A refiner may apply to EPA for up to an additional six months to comply with the standards of § 80.510 or 80.520 for the acquired refinery if more than 30 months would be required for the necessary engineering, permitting, construction, and start-up work to be completed. Such applications must include detailed technical information supporting the need for additional time. EPA will base a decision to approve additional time on information provided by the refiner and on other relevant information. In no case will EPA extend the compliance date beyond May 31, 2010 for a refinery acquired from a motor vehicle diesel fuel small refiner or beyond the dates specified in § 80.554(a) or (b), as applicable, for a refinery acquired from a NRLM diesel fuel small refiner.

(c) Refiners who acquire a refinery from a refiner with approved status as a motor vehicle diesel fuel small refiner or a NRLM diesel fuel small refiner under § 80.551(g), shall notify EPA in writing no later than 20 days following the acquisition.

[69 FR 39180, June 29, 2004]

§§ 80.556–80.559 [Reserved]

OTHER HARDSHIP PROVISIONS

§ 80.560 How can a refiner seek temporary relief from the requirements of this subpart in case of extreme hardship circumstances?

(a) EPA may, at its discretion, grant a refiner of crude oil that processes crude oil through refinery processing units, for one or more of its refineries, temporary relief from some or all of the provisions of this subpart. Such relief shall be no less stringent than the small refiner compliance options specified in § 80.552 for motor vehicle diesel fuel and § 80.554 for NRLM diesel fuel. EPA may grant such relief provided that the refiner demonstrates that—

(1) Unusual circumstances exist that impose extreme hardship and significantly affect the refiner's ability to comply by the applicable date; and

(2) It has made best efforts to comply with the requirements of this subpart.

(b)(1) For motor vehicle diesel fuel, applications must be submitted to EPA by June 1, 2002 to the following address: U.S. EPA—Attn: Diesel Hardship, Transportation and Regional Programs Division (6406J), 1200 Pennsylvania Avenue, NW., Washington, DC 20460 (certified mail/return receipt) or Attn: Diesel Hardship, Transportation and Regional Programs Division, 1310 L Street, NW., 6th floor, Washington, DC 20005 (express mail/return receipt). EPA reserves the right to deny applications for appropriate reasons, including unacceptable environmental impact. Approval to distribute motor vehicle diesel fuel not subject to the 15 ppm sulfur standard may be granted for such time period as EPA determines is appropriate, but shall not extend beyond May 31, 2010.

(2) For NRLM diesel fuel, applications must be submitted to EPA by June 1, 2005 to the following address: U.S. EPA—Attn: Diesel Hardship, Transportation and Regional Programs Division (6406J), 1200 Pennsylvania Avenue, NW., Washington, DC 20460 (certified mail/return receipt) or Attn: Diesel Hardship, Transportation and Regional Programs Division, 1310 L Street, NW., 6th floor, Washington, DC 20005 (express mail/return receipt). EPA reserves the right to deny applications for appropriate reasons, including unacceptable environmental impact. Approval to distribute NRLM diesel fuel not subject to the 500 ppm sulfur standard may be granted for such time period as EPA determines is appropriate, but shall not extend beyond May 31, 2010 for NR diesel fuel and May 31, 2012 for NRLM diesel fuel. Approval to distribute NRLM diesel fuel not subject to the 15 ppm sulfur standard may be granted for such time period as EPA determines is appropriate, but shall not extend beyond May 31, 2014.

(c) Applications must include a plan demonstrating how the refiner will

comply with the requirements of this subpart as expeditiously as possible. The plan shall include a showing that contracts are or will be in place for engineering and construction of desulfurization equipment a plan for applying for and obtaining any permits necessary for construction or operation, projected timeline for beginning and completing construction, and for beginning actual operation of such equipment, and a description of plans to obtain necessary capital, and a detailed estimate of when the requirements of this subpart will be met.

(d) Applicants must provide, at a minimum, the following information:

(1) Detailed description of efforts to obtain capital for refinery investments and efforts made to obtain credits for compliance under § 80.531 for motor vehicle diesel fuel or §§ 80.535 through 80.536 for NRLM diesel fuel;

(2) Bond rating of entity that owns the refinery (in the case of joint ventures, include the bond rating of the joint venture entity and the bond ratings of all partners; in the case of corporations, include the bond ratings of any parent or subsidiary corporations); and

(3) Estimated capital investment needed to comply with the requirements of this subpart by the applicable date.

(e) In addition to the application requirements of paragraph (b) through (d) of this section, a refiner's application for temporary relief under this paragraph (e) must also include a compliance plan. Such compliance plan shall demonstrate how the refiner will engage in a quality assurance testing program, where appropriate, to ensure that the following conditions are met:

(1)(i) Its motor vehicle diesel fuel subject solely to the sulfur standards under § 80.520(c) has not caused motor vehicle diesel fuel subject to the 15 ppm sulfur standard § 80.520(a)(1) to fail to comply with that standard; or

(ii) Its NRLM diesel fuel subject solely to the 500 ppm sulfur standard under § 80.510(a) has not caused NRLM diesel fuel subject to the 15 ppm sulfur standard under § 80.510(b) or (c) to fail to comply with that standard.

(2) The quality assurance program must at least include periodic sampling and testing at the party's own facilities and at downstream facilities in the refiner's or importer's diesel fuel distribution system, to determine compliance with the applicable sulfur standards for both categories of motor vehicle diesel fuel; examination at the party's own facilities and at applicable downstream facilities, of product transfer documents to confirm appropriate transfers and deliveries of both products; and inspection of retailer and wholesale purchaser-consumer pump stands for the presence of the labels and warning signs required under this section. Any violations that are discovered shall be reported to EPA within 48 hours of discovery.

(f) Applications under this section must be accompanied by:

(1) A letter signed by the president, chief operating or chief executive officer of the company, or his/her designee, stating that the information contained in the application is true to the best of his/her knowledge.

(2) The name, address, phone number, facsimile number and e-mail address of a corporate contact person.

(g) Applicants must also provide any other relevant information requested by EPA.

(h) Refiners who are granted a hardship relief standard for any refinery and importers of fuel subject to temporary foreign refiner relief standards, must comply with the requirements of § 80.561(f).

(i) EPA may impose any reasonable conditions on waivers under this section, including limitations on the refinery's volume of motor vehicle diesel fuel and NRLM diesel fuel subject to temporary refiner relief standards.

(j) The provisions of this section are available only to refineries that produce diesel fuel from crude.

(k) The individual refinery sulfur standard and the compliance plan will be approved or disapproved by the Administrator, and approval will be effective when the refiner receives an approval letter from EPA. Unless approved, the refiner or, where applicable, the importer must comply with the motor vehicle diesel fuel standard under § 80.520(a)(1) by the appropriate compliance date specified in § 80.500 or the NRLM diesel fuel standards and

compliance dates under § 80.510(a), (b), and (c) as applicable.

(l) If EPA finds that a refiner provided false or inaccurate information on its application for hardship relief, EPA's approval of the refiners application will be void *ab initio*.

[66 FR 5136, Jan. 18, 2001, as amended at 69 FR 39181, June 29, 2004]

§ 80.561 How can a refiner or importer seek temporary relief from the requirements of this subpart in case of extreme unforeseen circumstances?

In appropriate extreme, unusual, and unforseen circumstances (for example, natural disaster or refinery fire) which are clearly outside the control of the refiner or importer and which could not have been avoided by the exercise of prudence, diligence, and due care, EPA may permit a refiner or importer, for a brief period, to distribute motor vehicle diesel fuel or NRLM diesel fuel which does not meet the requirements of this subpart if:

(a) It is in the public interest to do so (e.g., distribution of the nonconforming diesel fuel is necessary to meet projected shortfalls which cannot otherwise be compensated for);

(b) The refiner or importer exercised prudent planning and was not able to avoid the violation and has taken all reasonable steps to minimize the extent of the nonconformity;

(c) The refiner or importer can show how the requirements for motor vehicle diesel fuel or NRLM diesel fuel will be expeditiously achieved;

(d) The refiner or importer agrees to make up any air quality detriment associated with the nonconforming motor vehicle diesel fuel or NRLM diesel fuel, where practicable;

(e) The refiner or importer pays to the U.S. Treasury an amount equal to the economic benefit of the nonconformity minus the amount expended pursuant to paragraph (d) of this section, in making up the air quality detriment; and

(f)(1) In the case of motor vehicle diesel fuel distributed under this section that does not meet the 15 ppm sulfur standard under § 80.520(a)(1), such diesel fuel shall not be distributed for use in model year 2007 or later motor vehicles, and must meet all the requirements and prohibitions of this subpart applicable to diesel fuel meeting the sulfur standard under § 80.520(c), or to diesel fuel that is not motor vehicle diesel fuel, as applicable.

(2) In the case of NRLM diesel fuel distributed under this section from June 1, 2007 through May 31, 2010 that does not meet the 500 ppm sulfur standard under § 80.510(a), such diesel fuel must meet the requirements and prohibitions applicable to high sulfur NRLM credit fuel under § 80.536(f)(1)(i) and (ii).

(3) In the case of NR diesel fuel distributed under this section after May 31, 2010 that does not meet the 15 ppm sulfur standard under § 80.510(b), such diesel fuel shall not be distributed for use in model year 2011 or later nonroad engines, and must meet all the requirements and prohibitions of this subpart applicable to diesel fuel meeting the sulfur standard under § 80.510(a) for NRLM diesel fuel.

(4) In the case of NRLM diesel fuel distributed under this section after May 31, 2012 that does not meet the 15 ppm sulfur standard under § 80.510(c), such diesel fuel shall not be distributed for use in model year 2011 or later nonroad engines, and must meet all the requirements and prohibitions of this subpart applicable to diesel fuel meeting the sulfur standard under § 80.510(a) for NRLM diesel fuel.

[66 FR 5136, Jan. 18, 2001, as amended at 69 FR 39181, June 29, 2004; 75 FR 22970, Apr. 30, 2010]

§§ 80.562–80.569 [Reserved]

LABELING REQUIREMENTS

§ 80.570 What labeling requirements apply to retailers and wholesale purchaser-consumers of diesel fuel beginning June 1, 2006?

(a) From June 1, 2006 through November 30, 2010, any retailer or wholesale purchaser-consumer who sells, dispenses, or offers for sale or dispensing, motor vehicle diesel fuel subject to the 15 ppm sulfur standard of § 80.520(a)(1), must affix the following conspicuous and legible label, in block letters of no less than 24-point bold type, and printed in a color contrasting with the background, to each pump stand:

ULTRA-LOW SULFUR HIGHWAY DIESEL FUEL (15 ppm Sulfur Maximum)

Required for use in all model year 2007 and later highway diesel vehicles and engines.

Recommended for use in all diesel vehicles and engines.

(b) From June 1, 2006, through November 30, 2010, any retailer or wholesale purchaser-consumer who sells, dispenses, or offers for sale or dispensing, motor vehicle diesel fuel subject to the 500 ppm sulfur standard of § 80.520(c), must prominently and conspicuously display in the immediate area of each pump stand from which motor vehicle fuel subject to the 500 ppm sulfur standard is offered for sale or dispensing, the following legible label, in block letters of no less than 24-point bold type, printed in a color contrasting with the background:

LOW SULFUR HIGHWAY DIESEL FUEL (500 ppm Sulfur Maximum)

WARNING

Federal law prohibits use in model year 2007 and later highway vehicles and engines.

Its use may damage these vehicles and engines.

(c) From June 1, 2006 through May 31, 2007, any retailer or wholesale purchaser-consumer who sells, dispenses, or offers for sale or dispensing, diesel fuel for non-motor vehicle equipment that does not meet the standards for motor vehicle diesel fuel, must affix the following conspicuous and legible label, in block letters of no less than 24-point bold type, and printed in a color contrasting with the background, to each pump stand:

NON-HIGHWAY DIESEL FUEL (MAY EXCEED 500 PPM SULFUR)

WARNING

Federal law *prohibits* use in highway vehicles or engines.

Its use may damage these vehicles and engines.

(d) The labels required by paragraphs (a) through (c) of this section must be placed on the vertical surface of each pump housing and on each side that has gallon and price meters. The labels shall be on the upper two-thirds of the pump, in a location where they are clearly visible.

(e) Alternative labels to those specified in paragraphs (a) through (c) of this section may be used as approved by EPA.

[69 FR 39182, June 29, 2004, as amended at 71 FR 25718, May 1, 2006; 75 FR 22970, Apr. 30, 2010]

§ 80.571 What labeling requirements apply to retailers and wholesale purchaser-consumers of NRLM diesel fuel or heating oil beginning June 1, 2007?

Any retailer or wholesale purchaser-consumer who sells, dispenses, or offers for sale or dispensing nonroad, locomotive or marine (NRLM) diesel fuel (including nonroad (NR) and locomotive or marine (LM)), or heating oil, must prominently and conspicuously display in the immediate area of each pump stand from which non-highway diesel fuel is offered for sale or dispensing, one of the following legible labels, as applicable, in block letters of no less than 24-point bold type, printed in a color contrasting with the background:

(a) From June 1, 2007 through May 31, 2010, for pumps dispensing NRLM diesel fuel meeting the 15 ppm sulfur standard of § 80.510(b):

ULTRA-LOW SULFUR NON-HIGHWAY DIESEL FUEL (15 PPM SULFUR MAXIMUM)

Required for use in all model year 2011 and newer nonroad diesel engines.

Recommended for use in all nonroad, locomotive, and marine diesel engines.

WARNING

Federal Law *prohibits* use in highway vehicles or engines.

(b) From June 1, 2007, through September 30, 2010, for pumps dispensing NRLM diesel fuel meeting the 500 ppm sulfur standard of § 80.510(a):

LOW SULFUR NON-HIGHWAY DIESEL FUEL (500 ppm Sulfur Maximum)

WARNING

Federal Law prohibits use in highway vehicles or engines.

(c) From June 1, 2007 through September 30, 2010, for pumps dispensing NRLM diesel fuel not meeting, or not offered as meeting, the 500 ppm sulfur standard of § 80.510(a) or the 15 ppm sulfur standard of § 80.510(b):

HIGH SULFUR NON-HIGHWAY DIESEL FUEL (MAY EXCEED 500 PPM SULFUR)

WARNING

Federal law *prohibits* use in highway vehicles or engines.

May damage nonroad diesel engines required to use low-sulfur or ultra-low sulfur diesel fuel.

(d) From June 1, 2007, and beyond, for pumps dispensing non-motor vehicle diesel fuel for use other than in nonroad, locomotive, or marine engines, such as for use as heating oil:

HEATING OIL (May Exceed 500 ppm Sulfur)

WARNING

Federal law prohibits use in highway vehicles or engines, or in nonroad, locomotive, or marine diesel engines.

Its use may damage these diesel engines.

(e) The labels required by paragraphs (a) through (d) of this section must be placed on the vertical surface of each pump housing and on each side that has gallon and price meters. The labels shall be on the upper two-thirds of the pump, in a location where they are clearly visible.

(f) Alternative labels to those specified in paragraphs (a) through (d) of this section may be used as approved by EPA.

[69 FR 39182, June 29, 2004, as amended at 71 FR 25718, May 1, 2006; 75 FR 22970, Apr. 30, 2010]

§ 80.572 What labeling requirements apply to retailers and wholesale purchaser-consumers of Motor Vehicle, NR, LM and NRLM diesel fuel and heating oil beginning June 1, 2010?

Any retailer or wholesale purchaser-consumer who sells, dispenses, or offers for sale or dispensing nonroad, locomotive or marine (NRLM) diesel fuel (including nonroad (NR) and locomotive or marine (LM)), or heating oil, must prominently and conspicuously display in the immediate area of each pump stand from which non-highway diesel fuel is offered for sale or dispensing, one of the following legible labels, as applicable, in block letters of no less than 24-point bold type, printed in a color contrasting with the background:

(a) From June 1, 2010, through September 31, 2014, any retailer or wholesale purchaser-consumer who sells, dispenses, or offers for sale or dispensing, motor vehicle diesel fuel subject to the 15 ppm sulfur standard of § 80.520(a)(1), must affix the following conspicuous and legible label, in block letters of no less than 24-point bold type, and printed in a color contrasting with the background, to each pump stand:

ULTRA-LOW SULFUR HIGHWAY DIESEL FUEL (15 ppm Sulfur Maximum)

Required for use in all highway diesel vehicles and engines.

Recommended for use in all diesel vehicles and engines.

(b) From June 1, 2010, through September 30, 2012, for pumps dispensing NR diesel fuel subject to the 15 ppm sulfur standard of § 80.510(b):

ULTRA-LOW SULFUR NON-HIGHWAY DIESEL FUEL (15 ppm Sulfur Maximum)

Required for use in all model year 2011 and later nonroad diesel engines.

Recommended for use in all other non-highway diesel engines.

WARNING

Federal law prohibits use in highway vehicles or engines.

(c) From June 1, 2010 through September 30, 2014, for pumps dispensing NRLM diesel fuel subject to the 500 ppm sulfur standard of § 80.510(a):

LOW SULFUR NON-HIGHWAY DIESEL FUEL (500 PPM SULFUR MAXIMUM)

WARNING

Federal law *prohibits* use in all model year 2011 and newer nonroad engines.

May damage model year 2011 and newer nonroad engines.

Federal law *prohibits* use in highway vehicles or engines.

(d) From June 1, 2010 through September 30, 2012 and from February 25, 2013 and thereafter, for pumps dispensing LM diesel fuel subject to the 500 ppm sulfur standard of § 80.510(a):

LOW SULFUR LOCOMOTIVE AND MARINE DIESEL FUEL (500 PPM SULFUR MAXIMUM)

WARNING

Federal law *prohibits* use in nonroad engines or in highway vehicles or engines.

(e) The labels required by paragraphs (a) through (d) of this section must be placed on the vertical surface of each pump housing and on each side that has gallon and price meters. The labels shall be on the upper two-thirds of the pump, in a location where they are clearly visible.

(f) Alternative labels to those specified in paragraphs (a) through (d) of this section may be used as approved by EPA.

[69 FR 39183, June 29, 2004, as amended at 71 FR 25718, May 1, 2006; 75 FR 22970, Apr. 30, 2010; 77 FR 75880, Dec. 26, 2012]

§ 80.573 What labeling requirements apply to retailers and wholesale purchaser-consumers of NRLM diesel fuel and heating oil beginning June 1, 2012?

Any retailer or wholesale purchaser-consumer who sells, dispenses, or offers for sale or dispensing nonroad, locomotive or marine (NRLM) diesel fuel (including nonroad (NR) and locomotive or marine (LM)), or heating oil, must prominently and conspicuously display in the immediate area of each pump stand from which non-highway diesel fuel is offered for sale or dispensing, one of the following legible labels, as applicable, in block letters of no less than 24-point bold type, printed in a color contrasting with the background:

(a) From June 1, 2012, through September 30, 2014, for pumps dispensing NRLM diesel fuel subject to the 15 ppm sulfur standard of § 80.510(c):

ULTRA-LOW SULFUR NON-HIGHWAY DIESEL FUEL (15 ppm Sulfur Maximum)

Required for use in all model year 2011 and later nonroad diesel engines.

Recommended for use in all other non-highway diesel engines.

WARNING

Federal law prohibits use in highway vehicles or engines.

(b) The labels required by paragraph (a) of this section must be placed on the vertical surface of each pump housing and on each side that has gallon and price meters. The labels shall be on the upper two-thirds of the pump, in a location where they are clearly visible.

(c) Alternative labels to those specified in paragraph (a) of this section may be used as approved by EPA.

[69 FR 39183, June 29, 2004, as amended at 71 FR 25718, May 1, 2006; 75 FR 22970, Apr. 30, 2010]

§ 80.574 What labeling requirements apply to retailers and wholesale purchaser-consumers of ECA marine fuel beginning June 1, 2014?

(a) Any retailer or wholesale purchaser-consumer who sells, dispenses, or offers for sale or dispensing ECA marine fuel must prominently and conspicuously display in the immediate area of each pump stand from which ECA marine fuel is offered for sale or dispensing, one of the following legible labels, as applicable, in block letters of no less than 24-point bold type, printed in a color contrasting with the background:

(1) From June 1, 2014, and beyond, for pumps dispensing ECA marine fuel subject to the 1,000 ppm sulfur standard of § 80.510(k):

1,000 ppm SULFUR ECA MARINE FUEL (1,000 ppm Sulfur Maximum)

For use in Category 3 (C3) marine vessels only.

WARNING

Federal law prohibits use in any engine that is not installed on a C3 marine vessel; use of fuel oil with a sulfur content greater than 1,000 ppm in an ECA is prohibited except as allowed by 40 CFR Part 1043.

(2) The labels required by paragraph (a)(1) of this section must be placed on the vertical surface of each pump housing and on each side that has gallon and price meters. The labels shall be on

the upper two-thirds of the pump, in a location where they are clearly visible.

(b) Alternative labels to those specified in paragraph (a) of this section may be used as approved by EPA.

(1) *For U.S. Mail:* U.S. EPA, Attn: Diesel Sulfur Alternative Label Request, 6406J, 1200 Pennsylvania Avenue, NW., Washington, DC 20460.

(2) *For overnight or courier services:* U.S. EPA, Attn: Diesel Sulfur Alternative Label Request, 6406J, 1310 L Street, NW., 6th Floor, Washington, DC 20005. (202) 343–9038.

[75 FR 22971, Apr. 30, 2010]

§§ 80.575–80.579 [Reserved]

SAMPLING AND TESTING

§ 80.580 What are the sampling and testing methods for sulfur?

The sulfur content of diesel fuel and diesel fuel additives is to be determined in accordance with this section.

(a) *Sampling method.* The applicable sampling methodology is provided in § 80.330(b).

(b) *Test method for sulfur*—(1) For ECA marine fuel subject to the 1,000 ppm sulfur standard of § 80.510(k), sulfur content may be determined using ASTM D2622 (incorporated by reference, *see* paragraph (e) of this section).

(2) For motor vehicle diesel fuel and diesel fuel additives subject to the 500 ppm sulfur standard of § 80.520(c), and NRLM diesel fuel subject to the 500 ppm sulfur standard of § 80.510(a)(1), sulfur content may be determined using ASTM D2622 (incorporated by reference, see paragraph (e) of this section).

(3) Beginning August 30, 2004, for motor vehicle diesel fuel and diesel fuel additives subject to the 15 ppm sulfur standard of § 80.520(a)(1), sulfur content may be determined using any test method approved under § 80.585.

(4) Beginning August 30, 2004, for NRLM diesel fuel and diesel fuel additives subject to the 15 ppm standard of § 80.510(b), sulfur content may be determined using any test method approved under § 80.585.

(c) *Alternative test methods for sulfur*—(1) *Options for testing sulfur content of 1,000 ppm diesel fuel.* (i) For ECA marine fuel subject to the 1,000 ppm sulfur standard of § 80.510(k), sulfur content may be determined using ASTM D4294, ASTM D5453, or ASTM D6920 (all incorporated by reference, *see* paragraph (e) of this section), provided that the refiner or importer test result is correlated with the appropriate method specified in paragraph (b)(1) of this section; or

(ii) For ECA marine fuel subject to the 1,000 ppm sulfur standard of § 80.510(k), sulfur content may be determined using any test method approved under § 80.585.

(2) *Options for testing sulfur content of 500 ppm diesel fuel.* (i) For motor vehicle diesel fuel and diesel fuel additives subject to the 500 ppm sulfur standard of § 80.520(c), and for NRLM diesel fuel subject to the 500 ppm sulfur standard of § 80.510(a), sulfur content may be determined using ASTM D4294, ASTM D5453, or ASTM D6920 (all incorporated by reference, see paragraph (e) of this section), provided that the refiner or importer test result is correlated with the appropriate method specified in paragraph (b)(2) of this section; or

(ii) For motor vehicle diesel fuel and diesel fuel additives subject to the 500 ppm sulfur standard of § 80.520(c), and for NRLM diesel fuel subject to the 500 ppm sulfur standard of § 80.510(a), sulfur content may be determined using any test method approved under § 80.585.

(d) *Adjustment factor for downstream test results.* (1) Except as specified in paragraph (d)(1)(i) of this section, an adjustment factor of negative two ppm sulfur shall be applied to the test results from any testing of motor vehicle diesel fuel or NRLM diesel fuel downstream of the refinery or import facility, to account for test variability, but only for testing of motor vehicle diesel fuel or NRLM diesel fuel identified as subject to the 15 ppm sulfur standard of § 80.510(b) or § 80.520(a)(1).

(i) Prior to October 15, 2008 an adjustment factor of negative three ppm sulfur shall be applied to the test results, to account for test variability, but only for testing of motor vehicle diesel fuel or NRLM diesel fuel identified as subject to the 15 ppm sulfur standard of § 80.510(b) or § 80.520(a)(1).

(ii) [Reserved]

(2) In addition to the adjustment factor provided in paragraph (d)(1)(i) of this section, prior to September 1, 2006, an adjustment factor of negative 7 ppm shall be applied to the test results from any testing of motor vehicle diesel fuel downstream of the refinery or import facility, to facilitate the transition to ULSD fuel, but only for testing of motor vehicle diesel fuel identified as subject to the 15 ppm sulfur standard of § 80.520(a)(1).

(3) In addition to the adjustment factor provided in paragraph (d)(1)(i) of this section, prior to October 15, 2006, an adjustment factor of negative 7 ppm shall be applied to the test results from any testing of motor vehicle diesel fuel at any retail outlet or wholesale purchaser-consumer facility, to facilitate the transition to ULSD fuel, but only for testing of motor vehicle diesel fuel identified as subject to the 15 ppm sulfur standard of § 80.520(a)(1).

(e) *Materials incorporated by reference.* The Director of the Federal Register approved the incorporation by reference of the document listed in this section as prescribed in 5 U.S.C. 552(a) and 1 CFR part 51. Anyone may inspect copies at the U.S. EPA, Air and Radiation Docket and Information Center, 1301 Constitution Ave., NW., Room B102, EPA West Building, Washington, DC 20460, under EPA docket ID Number EPA–HQ–OAR–2008–0558, or at the National Archives and Records Administration (NARA). The telephone number for the Air Docket Public Reading Room is (202) 566–1742. For information on the availability of this material at NARA, call 202–741–6030 or go to: *http://www.archives.gov/federal_register/code_of_federal_regulations/ibr_locations.html.* For further information on these test methods, please contact the Environmental Protection Agency at 734–214–4582.

(1) *ASTM material.* Anyone may purchase copies of these materials from the American Society for Testing and Materials (ASTM), 100 Barr Harbor Dr., West Conshohocken, PA 19428–2959, or by contacting ASTM customer service at 610–832–9585, or by contacting the e-mail address of *service@astm.org* from the ASTM Web site of *http://www.astm.org.*

(i) ASTM standard method D2622–05 (''ASTM D2622''), Standard Test Method for Sulfur in Petroleum Products by Wavelength Dispersive X-Ray Fluorescence Spectrometry, approved November 1, 2005.

(ii) [Reserved]

(iii) ASTM standard method D4294–03 (''ASTM D4294), Standard Test Method for Sulfur in Petroleum and Petroleum Products by Energy Dispersive X-ray Fluorescence Spectrometry, approved November 1, 2003.

(iv) ASTM standard method D5453–08a (''ASTM D5453''), Standard Test Method for Determination of Total Sulfur in Light Hydrocarbons, Spark Ignition Engine Fuel, Diesel Engine Fuel, and Engine Oil by Ultraviolet Fluorescence, approved February 1, 2008.

(v) ASTM standard method D6920–07 (''ASTM D6920''), Standard Test Method for Total Sulfur in Naphthas, Distillates, Reformulated Gasolines, Diesels, Biodiesels, and Motor Fuels by Oxidative Combustion and Electrochemical Detection, approved December 1, 2007.

(2) [Reserved]

[69 FR 39184, June 29, 2004, as amended at 70 FR 40896, July 15, 2005; 70 FR 70510, Nov. 22, 2005; 71 FR 16500, Apr. 3, 2006; 71 FR 25719, May 1, 2006; 73 FR 74357, Dec. 8, 2008; 75 FR 22971, Apr. 30, 2010]

§ 80.581 What are the batch testing and sample retention requirements for motor vehicle diesel fuel, NRLM diesel fuel, and ECA marine fuel?

(a) Beginning on June 1, 2006 (or earlier pursuant to § 80.531), for motor vehicle diesel fuel, and beginning June 1, 2010 (or earlier pursuant to § 80.535), for NRLM diesel fuel, and beginning June 1, 2014, for ECA marine fuel, each refiner and importer shall collect a representative sample from each batch of motor vehicle or NRLM diesel fuel produced or imported and subject to the 15 ppm sulfur content standard, or ECA marine fuel subject to the 1,000 ppm sulfur content standard. Batch, for the purposes of this section, means batch as defined under § 80.2 but without the reference to transfer of custody from one facility to another facility.

(b) Except as provided in paragraph (c) of this section, the refiner or importer shall test each sample collected pursuant to paragraph (a) of this section to determine its sulfur content for compliance with the requirements of this subpart prior to the diesel fuel leaving the refinery or import facility, using an appropriate sampling and testing method as specified in § 80.580.

(c)(1) Any refiner who produces motor vehicle, NRLM diesel fuel, or ECA marine fuel using computer-controlled in-line blending equipment, including the use of an on-line analyzer test method that is approved under the provisions of § 80.580, and who, subsequent to the production of the diesel fuel batch tests a composited sample of the batch under the provisions of § 80.580 for purposes of designation and reporting, is exempt from the requirement of paragraph (b) of this section to obtain the test result required under this section prior to the diesel fuel leaving the refinery, provided that the refiner obtains approval from EPA. The requirement of this paragraph (c)(1) that the in-line blending equipment must include an on-line analyzer test method that is approved under the provisions of § 80.580 is effective beginning June 1, 2006.

(2) To obtain an exemption from paragraph (b) of this section, the refiner must submit to EPA all the information required under § 80.65(f)(4)(i)(A). A letter signed by the president, chief operating or chief executive officer of the company, or his/her designee, stating that the information contained in the submission is true to the best of his/her belief must accompany any submission under this paragraph (c)(2).

(3) Refiners who seek an exemption under paragraph (c)(2) of this section must comply with any request by EPA for additional information or any other requirements that EPA includes as part of the exemption.

(4) Within 60 days of EPA's receipt of a submission under paragraph (c)(2) of this section, EPA will notify the refiner if the exemption is not approved or of any deficiencies in the refiner's submission, or if any additional information is required or other requirements are included in the exemption pursuant to paragraph (c)(3) of this section. In the absence of such notification from EPA, the effective date of an exemption under this paragraph (c) is 60 days from EPA's receipt of the refiner's submission.

(5) EPA reserves the right to modify the requirements of an exemption under this paragraph (c), in whole or in part, at any time, if EPA determines that the refiner's operation does not effectively or adequately control, monitor or document the sulfur content of the refinery's diesel fuel production, or if EPA determines that any other circumstances exist which merit modification of the requirements of an exemption, such as advancements in the state of the art for in-line blending measurement which allow for additional control or more accurate monitoring or documentation of sulfur content. If EPA finds that a refiner provided false or inaccurate information in any submission required for an exemption under this section, upon notification from EPA, the refiner's exemption will be void *ab initio*.

(d) All test results under this section shall be retained for five years and must be provided to EPA upon request.

(e) Samples collected under this section must be retained for at least 30 days and provided to EPA upon request.

[69 FR 39184, June 29, 2004, as amended at 71 FR 25719, May 1, 2006; 75 FR 22971, Apr. 30, 2010]

§ 80.582 What are the sampling and testing methods for the fuel marker?

For heating oil and NRLM diesel fuel subject to the fuel marker requirement in § 80.510(d), (e), or (f), the identification of the presence and concentration of the fuel marker in diesel fuel may be determined using the test procedures qualified in accordance with the requirements in this section.

(a) *Sampling and testing for methods for the fuel marker*. The sampling, sample preparation, and testing methods qualified for use in accordance with the requirements of this section may involve the use of hazardous materials, operations and equipment. This section does not address the associated safety

problems which may exist. It is the responsibility of the user of the procedures specified in this section to establish appropriate safety and health practices prior to their use. It is also the responsibility of the user to dispose of any byproducts which might result from conducting these procedures in a manner consistent with applicable safety and health requirements.

(b) *What are the precision and accuracy criteria for qualification of fuel marker test methods?*—(1) *Precision*. A standard deviation of less than 0.10 milligrams per liter is required, computed from the results of a minimum of 20 repeat tests made over 20 days on samples taken from a homogeneous commercially available diesel fuel which meets the applicable industry consensus and federal regulatory specifications and which contains the fuel marker at a concentration in the range of 0.10 to 8 milligrams per liter. In order to qualify, the 20 results must be a series of tests on the same material and there must be a sequential record of the analysis with no omissions. A laboratory facility may exclude a given sample or test result only if the exclusion is for a valid reason under good laboratory practices and it maintains records regarding the sample and test results and the reason for excluding them.

(2) *Accuracy*. (i) The arithmetic average of a continuous series of at least 10 tests performed on a commercially available marker solvent yellow 124 standard in the range of 0.10 to 1 milligrams per liter shall not differ from the ARV of that standard by more than 0.05 milligrams per liter.

(ii) The arithmetic average of a continuous series of at least 10 tests performed on a commercially available marker solvent yellow 124 standard in the range of 4 to 10 milligrams per liter shall not differ from the ARV of that standard by more than 0.05 milligrams per liter.

(iii) In applying the tests of paragraphs (b)(2)(i) and (ii) of this section, individual test results shall be compensated for any known chemical interferences.

(c) *What process must a test facility follow in order to qualify a test method for determining the fuel marker content of distillate fuels and how will EPA qualify or decline to qualify a test method?*—(1) *Qualification of test methods approved by voluntary consensus-based standards bodies*. Any standard test method developed by a Voluntary Consensus-Based Standards Body, such as the American Society for Testing and Materials (ASTM) or International Standards Organization (ISO), shall be considered a qualified test method for determining the fuel marker content of distillate fuel provided that it meets the precision and accuracy criteria under paragraph (b) of this section. The qualification of a test method is limited to the single test facility that performed the testing for accuracy and precision. The individual facility must submit the accuracy and precision results for each method, including information on the date and time of each test measurement used to demonstrate precision, following procedures established by the Administrator.

(2) *Qualification of test methods that have not been approved by a voluntary consensus-based standards body*. A test method that has not been approved by a voluntary consensus-based standards body may be qualified upon approval by the Administrator. The following information must be submitted in the application for approval by each test facility, for each test method that it wishes to have approved:

(i) Full test method documentation, including a description of the technology and/or instrumentation that makes the method functional.

(ii) Information demonstrating that the test method meets the accuracy and precision criteria under paragraph (b) of this section, including information on the date and time of each test measurement used to demonstrate precision.

(iii) Samples used for precision and accuracy determination must be retained for 90 days.

(iv) If requested by the Administrator, test results utilizing the method and performed on a sample of commercially available distillate fuel which meets the applicable industry consensus and federal regulatory specifications and which contains the fuel marker.

(v) Any additional information requested by the Administrator and necessary to render a decision as to qualification of the test method.

(vi) The qualification of a test method is limited to the single test facility that performed the testing for accuracy and precision and any other required testing.

(3)(i) Within 90 days of receipt of all materials required to be submitted under paragraph (c)(1) or (c)(2) of this section, the Administrator shall determine whether to qualify the test method under this section. The Administrator shall qualify the test method if all materials required under this section are received and the test method meets the accuracy and precision criteria of paragraph (b) of this section.

(ii) If the Administrator denies approval of the test method, within 90 days of receipt of all materials required to be submitted under this section, the Administrator will notify the applicant of the reasons for not approving the method. If the Administrator does not notify the applicant within 90 days of receipt of the application, that the test method is not approved, then the test method shall be deemed approved.

(iii) If the Administrator finds that an individual test facility has provided false or inaccurate information under this section, upon notice from the Administrator, the qualification shall be void *ab initio*.

(iv) The qualification of any test method under this paragraph (c) shall be valid for the duration of the period during which the fuel marker requirements remain applicable under this subpart.

(d) *Quality control procedures for fuel marker measurement instrumentation.* A test shall not be considered a test using a qualified test method unless the following quality control procedures are performed separately for each instrument used to make measurements:

(1) Follow all mandatory provisions of ASTM D 6299–02 and construct control charts from the mandatory quality control testing prescribed in paragraph 7.1 of the reference method, following guidelines under A 1.5.1 for individual observation charts and A 1.5.2 for moving range charts. The Director of the Federal Register approved the incorporation by reference of ASTM D 6299–02, Standard Practice for Applying Statistical Quality Assurance Techniques to Evaluate Analytical Measurement System Performance, as prescribed in 5 U.S.C. 552(a) and 1 CFR part 51. Anyone may purchase copies of this standard from the American Society for Testing and Materials, 100 Barr Harbor Dr., West Conshohocken, PA 19428. Anyone may inspect copies at the U.S. EPA, Air and Radiation Docket and Information Center, 1301 Constitution Ave., NW., Room B102, EPA West Building, Washington, DC 20460 or at the National Archives and Records Administration (NARA). For information on the availability of this material at NARA, call 202–741–6030, or go to: *http://www.archives.gov/federal_register/code_of_federal_regulations/ibr_locations.html*.

(2) Follow paragraph 7.3.1 of ASTM D 6299–02 to check standards using a reference material at least monthly or following any major change to the laboratory equipment or test procedure. Any deviation from the accepted reference value of a check standard greater than 0.10 milligrams per liter must be investigated.

(3) Samples of tested batches must be retained for 30 days or the period equal to the interval between quality control sample tests, whichever is longer.

(4) Upon discovery of any quality control testing violation of paragraph A 1.5.1.3 or A 1.5.2.1 of ASTM D 6299–02, or any check standard deviation greater than 0.10 milligrams per liter, conduct an investigation into the cause of such violation or deviation and, after restoring method performance to statistical control, retest retained samples from batches originally tested since the last satisfactory quality control material or check standard testing occasion.

(5) Retain results of quality control testing and retesting of retained samples under paragraph (d)(3) of this section for five years.

[69 FR 39185, June 29, 2004]

§ 80.583 What alternative sampling and testing requirements apply to importers who transport motor vehicle diesel fuel, NRLM diesel fuel, or ECA marine fuel by truck or rail car?

Importers who import diesel fuel subject to the 15 ppm sulfur standard under § 80.510(b) or (c) or 80.520(a) into the United States by truck or by rail car may comply with the following requirements instead of the requirements to sample and test each batch of fuel designated as subject to the 15 ppm sulfur standard under § 80.581 otherwise applicable to importers:

(a) *Terminal testing.* For purposes of determining compliance with the 15 ppm sulfur standard, the importer may use test results for sulfur content testing conducted by the foreign truck-loading or rail car-loading terminal operator for diesel fuel contained in the storage tank from which trucks or rail cars used to transport diesel fuel designated as subject to the 15 ppm sulfur content standard into the United States are loaded, provided the following conditions are met:

(1) The sampling and testing shall be performed after each receipt of diesel fuel into the storage tank, or immediately before each transfer of diesel fuel to the importer's truck or rail car.

(2) The sampling and testing shall be performed according to § 80.580.

(3) At the time of each transfer of diesel fuel to the importer's truck or rail car for import to the U.S., the importer must obtain a copy of the terminal test result that indicates the sulfur content of the truck or rail car load, or truck or rail car compartment load, as applicable.

(b) *Quality assurance program.* The importer must conduct a quality assurance program, as specified in this paragraph (b), for each truck or rail car loading terminal.

(1) Quality assurance samples must be obtained from the truck-loading or rail car loading terminal and tested by the importer, or by an independent laboratory, and the terminal operator must not know in advance when samples are to be collected.

(2) The sampling and testing must be performed using the methods specified in § 80.580.

(3) The frequency of the quality assurance sampling and testing must be at least one sample for each 50 of an importer's trucks or rail cars that are loaded at a terminal, or one sample per month, whichever is more frequent.

(c) *Party required to conduct quality assurance testing.* The quality assurance program under paragraph (b) of this section shall be conducted by the importer. In the alternative, this testing may be conducted by an independent laboratory that meets the criteria under § 80.65(f)(2)(iii), provided the importer receives copies of all results of tests conducted no later than 21 days after the sample was taken.

(d) *Alternative batch designations.* For purposes of maintaining batch records under §§ 80.592, 80.600, and 80.602, designation of batches under § 80.598, and reporting under §§ 80.593, 80.601, and 80.604:

(1) In lieu of treating each portion of a tank truck compartment delivered to a different facility as a different batch, a truck importer may treat each compartment as a batch, if all the fuel in the compartment is delivered only to retail outlets, wholesale purchaser-consumers or other end users. Where different compartments contain homogeneous product of identical designations, the total volume of those compartments may be treated as a single batch, if the entire volume is delivered only to retail outlets, wholesale purchaser-consumers or other ultimate consumers.

(2) Each portion of a rail car (or rail cars) delivery of a different designation or each delivery to a different facility is considered to be a separate batch.

(e) *EPA inspections of terminals.* EPA inspectors or auditors must be given full and immediate access to the truck or rail car-loading terminal and any laboratory at which samples of diesel fuel collected at the terminal are analyzed, and must be allowed to conduct inspections, review records, collect diesel fuel samples and perform audits. These inspections or audits may be either announced or unannounced.

(f) *Certified DFR-Diesel.* This section does not apply to Certified DFR-Diesel as defined in § 80.620.

(g) *Effect of noncompliance.* If any of the requirements of this section are

not met, all motor vehicle diesel fuel and NRLM diesel fuel imported by the truck or rail car importer during the time the requirements are not met is deemed in violation of the 15 ppm sulfur diesel fuel standards in § 80.510(b) or (c) or § 80.520(a), as applicable. Additionally, if any requirement is not met, EPA may notify the importer of the violation, and, if the requirement is not fulfilled within 10 days of notification, the truck importer may not in the future use the sampling and testing provisions in this section in lieu of the provisions in § 80.581.

[69 FR 39186, June 29, 2004, as amended at 75 FR 22971, Apr. 30, 2010]

§ 80.584 What are the precision and accuracy criteria for approval of test methods for determining the sulfur content of motor vehicle diesel fuel, NRLM diesel fuel, and ECA marine fuel?

(a) *Precision*. (1) For motor vehicle diesel fuel and diesel fuel additives subject to the 15 ppm sulfur standard of § 80.520(a)(1) and NRLM diesel fuel and diesel fuel additives subject to the 15 ppm sulfur standard of § 80.510(b) and (c), a standard deviation less than 0.72 ppm, computed from the results of a minimum of 20 repeat tests made over 20 days on samples taken from a single homogeneous commercially available diesel fuel with a sulfur content in the range of 5–15 ppm. The 20 results must be a series of tests with a sequential record of the analyses and no omissions. A laboratory facility may exclude a given sample or test result only if the exclusion is for a valid reason under good laboratory practices and it maintains records regarding the sample and test results and the reason for excluding them.

(2) For motor vehicle diesel fuel subject to the 500 ppm sulfur standard of § 80.520(c), and for NRLM diesel fuel subject to the 500 ppm sulfur standard of § 80.510(a), of a standard deviation less than 9.68 ppm, computed from the results of a minimum of 20 repeat tests made over 20 days on samples taken from a single homogeneous commercially available diesel fuel with a sulfur content in the range of 200–500 ppm. The 20 results must be a series of tests with a sequential record of the analyses and no omissions. A laboratory facility may exclude a given sample or test result only if the exclusion is for a valid reason under good laboratory practices and it maintains records regarding the sample and test results and the reason for excluding them.

(3) For ECA marine fuel subject to the 1,000 ppm sulfur standard of § 80.510(k), of a standard deviation less than 18.07 ppm, computed from the results of a minimum of 20 repeat tests made over 20 days on samples taken from a single homogeneous commercially available diesel fuel with a sulfur content in the range of 700–1,000 ppm. The 20 results must be a series of tests with a sequential record of the analyses and no omissions. A laboratory facility may exclude a given sample or test result only if the exclusion is for a valid reason under good laboratory practices and it maintains records regarding the sample and test results and the reason for excluding them.

(b) *Accuracy*. (1) For motor vehicle diesel fuel and diesel fuel additives subject to the 15 ppm sulfur standard of § 80.520(a)(1) and NRLM diesel fuel and diesel fuel additives subject to the 15 ppm sulfur standard of § 80.510(b) and (c):

(i) The arithmetic average of a continuous series of at least 10 tests performed on a commercially available gravimetric sulfur standard in the range of 1–10 ppm sulfur shall not differ from the accepted reference value (ARV) of that standard by more than 0.54 ppm sulfur;

(ii) The arithmetic average of a continuous series of at least 10 tests performed on a commercially available gravimetric sulfur standard in the range of 10–20 ppm sulfur shall not differ from the ARV of that standard by more than 0.54 ppm sulfur; and

(iii) In applying the tests of paragraphs (b)(1)(i) and (ii) of this section, individual test results shall be compensated for any known chemical interferences.

(2) For motor vehicle diesel fuel subject to the 500 ppm sulfur standard of § 80.520(c), and for NRLM diesel fuel subject to the 500 ppm sulfur standard of § 80.510(a):

(i) The arithmetic average of a continuous series of at least 10 tests performed on a commercially available gravimetric sulfur standard in the range of 100–200 ppm sulfur shall not differ from the ARV of that standard by more than 7.26 ppm sulfur;

(ii) The arithmetic average of a continuous series of at least 10 tests performed on a commercially available gravimetric sulfur standard in the range of 400–500 ppm sulfur shall not differ from the ARV of that standard by more than 7.26 ppm sulfur; and

(iii) In applying the tests of paragraphs (b)(2)(i) and (ii) of this section, individual test results shall be compensated for any known chemical interferences.

(3) For ECA marine fuel subject to the 1,000 ppm sulfur standard of § 80.510(k):

(i) The arithmetic average of a continuous series of at least 10 tests performed on a commercially available gravimetric sulfur standard in the range of 300–400 ppm sulfur shall not differ from the ARV of that standard by more than 13.55 ppm sulfur;

(ii) The arithmetic average of a continuous series of at least 10 tests performed on a commercially available gravimetric sulfur standard in the range of 900–1,000 ppm sulfur shall not differ from the ARV of that standard by more than 13.55 ppm sulfur; and

(iii) In applying the tests of paragraphs (b)(3)(i) and (ii) of this section, individual test results shall be compensated for any known chemical interferences.

[69 FR 39187, June 29, 2004, as amended at 75 FR 22971, Apr. 30, 2010]

§ 80.585 What is the process for approval of a test method for determining the sulfur content of diesel or ECA marine fuel?

(a) *Approval of test methods approved by voluntary consensus-based standards bodies.* For such a method to be approved, the following information must be submitted to the Administrator by each test facility for each test method that it wishes to have approved: Any test method approved by a voluntary consensus-based standards body, such as the American Society for Testing and Materials (ASTM) or International Standards Organization (ISO), shall be approved as a test method for determining the sulfur content of diesel fuel if it meets the applicable accuracy and precision criteria under § 80.584. The approval of a test method is limited to the single test facility that performed the testing for accuracy and precision. The individual facility must submit the accuracy and precision results for each method, including information on the date and time of each test measurement used to demonstrate precision, following procedures established by the Administrator.

(b) *Approval of test methods not approved by a voluntary consensus-based standards body.* For such a method to be approved, the following information must be submitted to the Administrator by each test facility for each test method that it wishes to have approved:

(1) Full test method documentation, including a description of the technology and/or instrumentation that makes the method functional.

(2) Information demonstrating that the test method meets the applicable accuracy and precision criteria of § 80.584, including information on the date and time of each test measurement used to demonstrate precision.

(3) If requested by the Administrator, test results from use of the method to analyze samples of commercially available fuel provided by EPA.

(4) Any additional information requested by the Administrator and necessary to render a decision as to approval of the test method.

(c) *Sample retention.* Samples used for precision and accuracy determination must be retained for 90 days.

(d) *EPA approval.* (1) Within 90 days of receipt of all materials required to be submitted under paragraph (a) or (b) of this section, the Administrator shall determine whether the test method is approved under this section.

(2) If the Administrator denies approval of the test method, within 90 days of receipt of all materials required to be submitted under paragraph (a) or (b) of this section, the Administrator will notify the applicant of the reasons for not approving the method. If the Administrator does not notify the applicant within 90 days of

receipt of the application, that the test method is not approved, then the test method shall be deemed approved.

(3) If the Administrator finds that an individual test facility has provided false or inaccurate information under this section, upon notice from the Administrator the approval shall be void *ab initio*.

(4) The approval of any test method under paragraph (b) of this section shall be valid for five years from the date of approval by the Administrator and shall not be extended. If the method is later approved by a voluntary consensus-based standards body, the approval shall remain valid as long as the conditions of paragraph (a) of this section are met.

(e) *Quality assurance procedures for sulfur measurement instrumentation*. A test shall not be considered a test using an approved test method unless the following quality control procedures are performed separately for each instrument used to make measurements:

(1) Follow all mandatory provisions of ASTM D 6299–02 and construct control charts from the mandatory quality control testing prescribed in paragraph 7.1 of the reference method, following guidelines under A 1.5.1 for individual observation charts and A 1.5.2 for moving range charts. The Director of the Federal Register approved the incorporation by reference of ASTM D 6299–02, Standard Practice for Applying Statistical Quality Assurance Techniques to Evaluate Analytical Measurement System Performance, as prescribed in 5 U.S.C. 552(a) and 1 CFR part 51. Anyone may purchase copies of this standard from the American Society for Testing and Materials, 100 Barr Harbor Dr., West Conshohocken, PA 19428. Anyone may inspect copies at the U.S. EPA, Air and Radiation Docket and Information Center, 1301 Constitution Ave., NW., Room B102, EPA West Building, Washington, DC 20460 or at the National Archives and Records Administration (NARA). For information on the availability of this material at NARA, call 202–741–6030, or go to: *http://www.archives.gov/federal_register/code_of_federal_regulations/ibr_locations.html*.

(2) Follow paragraph 7.3.1 of ASTM D 6299–02 to check standards using a reference material at least monthly or following any major change to the laboratory equipment or test procedure. Any deviation from the accepted reference value of a check standard greater than 1.44 ppm (for diesel fuel subject to the 15 ppm sulfur standard), 19.36 ppm (for diesel fuel subject to the 500 ppm sulfur standard), or 36.14 ppm (for ECA marine fuel subject to the 1,000 ppm sulfur standard must be investigated.

(3) Samples of tested batches must be retained for 30 days or the period equal to the interval between quality control sample tests, whichever is longer.

(4) Upon discovery of any quality control testing violation of paragraph A 1.5.1.3 or A 1.5.2.1 of ASTM D 6299–02, or any check standard deviation greater than 1.44 ppm (for diesel fuel subject to the 15 ppm sulfur standard), 19.36 ppm (for diesel fuel subject to the 500 ppm sulfur standard), or 36.14 ppm (for ECA marine fuel subject to the 1,000 ppm sulfur standard), conduct an investigation into the cause of such violation or deviation and, after restoring method performance to statistical control, retest retained samples from batches originally tested since the last satisfactory quality control material or check standard testing occasion.

[69 FR 39187, June 29, 2004, as amended at 75 FR 22972, Apr. 30, 2010]

§ 80.586 What are the record retention requirements for test methods approved under this subpart?

Each individual test facility must retain records related to the establishment of accuracy and precision values, all test method documentation, and any quality control testing and analysis under §§ 80.582, 80.584 and 80.585, for five years.

[69 FR 39188, June 29, 2004]

§§ 80.587–80.589 [Reserved]

RECORDKEEPING AND REPORTING REQUIREMENTS

§ 80.590 What are the product transfer document requirements for motor vehicle diesel fuel, NRLM diesel fuel, heating oil, ECA marine fuel, and other distillates?

(a) This paragraph (a) applies on each occasion that any person transfers custody or title to MVNRLM diesel fuel, heating oil, or ECA marine fuel (including distillates used or intended to be used as MVNRLM diesel fuel, heating oil, or ECA marine fuel) except when such fuel is dispensed into motor vehicles or nonroad equipment, locomotives, marine diesel engines or C3 vessels. Note that 40 CFR part 1043 specifies requirements for documenting fuel transfers to certain marine vessels. For all fuel transfers subject to this paragraph (a), the transferor must provide to the transferee documents which include the following information:

(1) The names and addresses of the transferor and transferee.

(2) The volume of diesel fuel or distillate which is being transferred.

(3) The location of the diesel fuel or distillate at the time of the transfer.

(4) The date of the transfer.

(5) For transfers of MVNRLM diesel fuel or ECA marine fuel (beginning June 1, 2014), the sulfur content standard the transferor represents the fuel to meet.

(6) Beginning June 1, 2006, when an entity, from a facility at any point in the distribution system, transfers custody of a distillate or residual fuel designated under § 80.598, the following information must also be included:

(i) The facility registration number of the transferor and transferee, for terminals and all parties upstream, under § 80.597, if any.

(ii) An accurate and clear statement of the applicable designation and/or classification under § 80.598(a) and (b), for example, ''500 ppm sulfur NRLM diesel fuel'', or ''jet fuel''; and whether the fuel is dyed or undyed, and for heating oil, whether marked or unmarked where applicable.

(7) For transfers of title or custody from one facility to another in the distribution system where diesel fuel or distillates are taxed, dyed or marked, and for any subsequent transfers (except when such fuel is dispensed into motor vehicles or nonroad, locomotive, or marine equipment), an accurate statement on the product transfer document of the applicable fuel uses and classifications, as follows (however, in instances where space is constrained, substantially similar language may be used following approval from EPA):

(i) *Undyed 15 ppm sulfur diesel fuel.* For the period from June 1, 2006 and beyond, ''15 ppm sulfur (maximum) Undyed Ultra-Low Sulfur Diesel Fuel. For use in all diesel vehicles and engines.'' From June 1, 2006 through May 31, 2010, the product transfer document must also state whether the diesel fuel is #1D or #2D, or NP diesel.

(ii) *Dyed 15 ppm sulfur diesel fuel.* From June 1, 2006 and beyond, ''15 ppm sulfur (maximum) Dyed Ultra-Low Sulfur Diesel Fuel. For use in all nonroad diesel engines. Not for use in highway vehicles or engines except for tax-exempt use in accordance with section 4082 of the Internal Revenue Code.''

(iii) *Undyed 500 ppm sulfur diesel fuel.* From June 1, 2006 through September 30, 2010, ''500 ppm sulfur (maximum) Undyed Low Sulfur Diesel Fuel. For use in Model Year 2006 and older diesel highway vehicles and engines. Also for use in nonroad, locomotive, and marine diesel engines. Not for use in model year 2007 and newer highway vehicles or engines.''

(iv) *Dyed 500 ppm sulfur diesel fuel.* (A) For the period of June 1, 2006 through September 30, 2010, ''500 ppm sulfur (maximum) Dyed Low Sulfur Nonroad, Locomotive or Marine Diesel Fuel. Not for use in highway vehicles or engines except for use in Model Year 2006 and older highway diesel vehicles or engines for tax-exempt use in accordance with section 4082 of the Internal Revenue Code.''

(B) From June 1, 2010 through September 30, 2014, ''500 ppm sulfur (maximum) Dyed Low Sulfur Nonroad Diesel Fuel. For use in model year 2010 and older nonroad diesel engines. May be used in locomotive and marine diesel engines. Not for use in highway vehicles and engines or model year 2011 or

later nonroad engines other than locomotive or marine diesel engines. Not for use in the Northeast/Mid-Atlantic Area.''

(C) For dyed locomotive and marine diesel fuel beginning June 1, 2010, ''500 ppm sulfur (maximum) Dyed Low Sulfur Locomotive and Marine diesel fuel. Not for use in highway or other nonroad vehicles and engines.''

(v) *Dyed High Sulfur NRLM Fuel.* From June 1, 2007 through September 30, 2010, ''High Sulfur Dyed Nonroad, Locomotive, or Marine Engine Diesel fuel—sulfur content may exceed 500 ppm sulfur. Not for use in highway vehicles or engines. Not for use in any nonroad engines requiring Ultra-Low Sulfur Diesel Fuel. Not for use in the Northeast/Mid-Atlantic Area.''

(vi) *Heating oil.* For heating oil produced or imported beginning June 1, 2007, ''Heating Oil. Not for use in highway vehicles or engines or nonroad, locomotive, or marine engines.''

(vii) *ECA marine fuel.* For ECA marine fuel produced or imported beginning June 1, 2014, ''1,000 ppm sulfur (maximum) ECA marine fuel. For use in Category 3 marine vessels only. Not for use in engines not installed on C3 marine vessels.''

(b) The following may be substituted for the descriptions in paragraph (a) of this section, as appropriate:

(1) ''This is high sulfur diesel fuel for use only in Guam, American Samoa, or the Northern Mariana Islands.'';

(2) ''This diesel fuel is for export use only.'';

(3) ''This diesel fuel is for research, development, or testing purposes only.''; or

(4) ''This diesel fuel is for use in diesel highway vehicles or nonroad equipment under an EPA-approved national security exemption only.''

(c) If undyed and/or unmarked distillate fuel is dyed and/or marked subsequent to the issuance of a product transfer document, at the time the distillate fuel is dyed and/or marked, a new product transfer document must be prepared with the language under paragraph (a)(7) of this section applicable to the changed fuel and provided to subsequent transferees.

(d) Except for transfers to truck carriers, retailers or wholesale purchaser-consumers, product codes may be used to convey the information required under this section if such codes are clearly understood by each transferee. ''15'', ''500'', or ''greater than 500'' or ''>500'' must appear clearly on the product transfer document, and may be contained in the product code. If the designation is included in the code: codes used to convey the statement in paragraphs (a)(7)(i) and (a)(7)(ii) of this section must contain the number ''15'', codes used to convey the statement in paragraphs (a)(7)(iii) and (a)(7)(iv) of this section must contain the number ''500''; codes used to convey the statement in paragraph (a)(7)(v) of this section must contain the statement ''greater than 500'' or ''>500''. If another letter, number, or symbol is being used to convey any of the statements in paragraphs (a)(7)(i), (a)(7)(ii), (a)(7)(iii), (a)(7)(iv), and/or (a)(7)(v) of this section, it must be clearly defined and denoted on the product transfer document.

(e) Beginning June 1, 2014, for ECA marine fuel only (except for transfers to truck carriers, retailers or wholesale purchaser-consumers), product codes may be used to convey the information required under this section if such codes are clearly understood by each transferee. ''1000'' must appear clearly on the product transfer document, and may be contained in the product code. If the designation is included in the code, codes used to convey the statement in paragraph (a)(7)(vii) of this section must contain the number ''1000''. If another letter, number, or symbol is being used to convey the statement in paragraph (a)(7)(vii) of this section, it must be clearly defined and denoted on the product transfer document.

(f) From June 1, 2001 through May 31, 2005, any transfer subject to this section, which is also subject to the early credit provisions of § 80.531(b), must comply with all applicable requirements of this section.

(g) From June 1, 2005 through May 31, 2006, any transfer subject to this section, which is also subject to the early credit requirements of § 80.531(c), must comply with all applicable requirements of this section.

(h) *Mobile refuelers*. The provisions of this section shall also apply to a mobile refueler that dispenses fuel from tanker trucks or other vessels into motor vehicles, nonroad diesel engines or nonroad diesel engine equipment. Each visit by the mobile refueler to a location shall be considered a separate occasion for purposes of paragraph (a) of this section. The tank trucks used by mobile refuelers are not subject to the labeling requirements in §§ 80.570 through 80.574.

(i) Identifications of fuel designations can be limited to a sub-designation that accurately identifies the fuel and do not need to also include the broader designation. For example, NR diesel fuel does not also need to be designated as NRLM or MVNRLM diesel fuel.

(j) *Pipeline ticketing*. For the case where a pipeline delivers a batch of ULSD to another facility that contains slight amounts of another type of fuel from a preceding or following batch, a clear statement must be included on the PTD denoting this. When this occurs, the receiving facility must handle the fuel appropriately (*e.g.*, redesignate or downgrade any amount of fuel in that batch that does not meet the applicable sulfur standard), in accordance with the provisions of §§ 80.527 and 80.599.

[69 FR 39188, June 29, 2004, as amended at 70 FR 40896, July 15, 2005; 70 FR 70510, Nov. 22, 2005, as amended at 71 FR 25719, May 1, 2006; 75 FR 22972, Apr. 30, 2010]

§ 80.591 What are the product transfer document requirements for additives to be used in diesel fuel?

(a) Except as provided in paragraphs (b) and (d) of this section, on each occasion that any person transfers custody or title to a diesel fuel additive that is subject to the provisions of § 80.521 to a party in the additive distribution system or in the diesel fuel distribution system for use downstream of the diesel fuel refiner, the transferor must provide to the transferee documents which identify the additive, and—

(1) Identify the name and address of the transferor and transferee; the date of transfer; the location at which the transfer took place; the volume of additive transferred; and

(2) Indicate compliance with the 15 ppm sulfur standard by inclusion of the following statement: ''The sulfur content of this diesel fuel additive does not exceed 15 ppm.''

(b) On each occasion that any person transfers custody or title to a diesel fuel additive subject to the requirements of § 80.521(b), to a party in the additive distribution system or in the diesel fuel distribution system for use in diesel fuel downstream of the diesel fuel refiner, the transferor must provide to the transferee documents which identify the additive, and do each of the following:

(1) Identify the name and address of the transferor and transferee; the date of transfer; the location at which the transfer took place; the volume of additive transferred.

(2) Indicate the high sulfur potential of the additive by inclusion of the following statement:

This diesel fuel additive may exceed the federal 15 ppm sulfur standard. Improper use of this additive may result in non-complying diesel fuel.

(3) If the additive package contains a static dissipater additive and/or red dye having a sulfur content greater than 15 ppm, a statement must be included which accurately describes the contents of the additive package pursuant to one of the following choices:

(i) ''This diesel fuel additive contains a static dissipater additive having a sulfur content greater than 15 ppm.''

(ii) ''This diesel fuel additive contains red dye having a sulfur content greater than 15 ppm.''

(iii) ''This diesel fuel additive contains a static dissipater additive and red dye having a sulfur content greater than 15 ppm.''

(4) Include the following information:

(i) The additive package's maximum sulfur concentration.

(ii) The maximum recommended concentration in volume percent for use of the additive package in diesel fuel.

(iii) The contribution to the sulfur level of the fuel, in ppm, that would result if the additive package is used at the maximum recommended concentration.

(c) Except for transfers of diesel fuel additives to truck carriers, retailers or

wholesale purchaser-consumers, product codes may be used to convey the information required under paragraphs (a) and (b) of this section, if such codes are clearly understood by each transferee. Codes used to convey the statement in paragraph (a)(2) of this section must contain the number ''15'' and codes used to convey the statement in paragraph (b)(2) of this section must not contain such number.

(d) For those diesel fuel additives which are sold in containers for use by the ultimate consumer of diesel fuel, each transferor must have displayed on the additive container, in a legible and conspicuous manner, either of the following statements, as applicable:

(1) ''This diesel fuel additive complies with the federal low sulfur content requirements for use in diesel motor vehicles and nonroad engines.''; or

(2) For those additives sold in containers for use by the ultimate consumer, with a sulfur content in excess of 15 ppm the following statement: ''This diesel fuel additive does not comply with federal ultra-low sulfur content requirements for use in model year 2007 and newer diesel motor vehicles or model year 2011 and newer diesel nonroad equipment engines.''

[69 FR 39189, June 29, 2004, as amended at 70 FR 40896, July 15, 2005; 71 FR 25719, May 1, 2006]

§ 80.592 What records must be kept by entities in the motor vehicle diesel fuel and diesel fuel additive distribution systems?

(a) *Records that must be kept by entities in the motor vehicle diesel fuel and diesel fuel additive distribution systems.* Beginning June 1, 2006, or for a refiner or importer, the first compliance period in which the refiner or importer is generating early credits under § 80.531(b) or (c), whichever is earlier, any person who produces, imports, sells, offers for sale, dispenses, distributes, supplies, offers for supply, stores, or transports motor vehicle diesel fuel subject to the provisions of this subpart, must keep all the following records:

(1) The applicable product transfer documents required under §§ 80.590 and 80.591.

(2) For any sampling and testing for sulfur content for a batch of motor vehicle diesel fuel produced or imported and subject to the 15 ppm sulfur standard or any sampling and testing for sulfur content as part of a quality assurance testing program, and any sampling and testing for cetane index, aromatics content, solvent yellow 124 content or dye solvent red 164 content of motor vehicle diesel fuel or motor vehicle diesel fuel additives:

(i) The location, date, time and storage tank or truck identification for each sample collected;

(ii) The name and title of the person who collected the sample and the person who performed the testing; and

(iii) The results of the tests for sulfur content (including, where applicable, the test results with and without application of the adjustment factor under § 80.580(d)) and for cetane index or aromatics content (as applicable), and the volume of product in the storage tank or container from which the sample was taken.

(3) The actions the party has taken, if any, to stop the sale or distribution of any motor vehicle diesel fuel found not to be in compliance with the sulfur standards specified in this subpart, and the actions the party has taken, if any, to identify the cause of any noncompliance and prevent future instances of noncompliance.

(b) *Additional records to be kept by refiners and importers of motor vehicle diesel fuel subject to hardship standards, small refiner standards and early credit provisions.* Beginning June 1, 2006, or for a refiner or importer, the first compliance period in which the refiner or importer is generating early credits under § 80.531(b) or (c), any refiner producing motor vehicle diesel fuel subject to the sulfur standard under § 80.520(a)(1), for each of its refineries, and any importer importing such motor vehicle diesel fuel, shall keep records that include the following information for each batch of motor vehicle diesel fuel produced or imported:

(1) The batch volume.

(2) The batch number, assigned under the batch numbering procedures under § 80.65(d)(3).

(3) The date of production or import.

(4) A record designating the batch as motor vehicle diesel fuel meeting the

500 ppm sulfur standard or as motor vehicle diesel fuel meeting the 15 ppm sulfur standard.

(5) For foreign refiners, the designations and other records required to be kept under § 80.620.

(6) In the case of importers, the designations and other records required under § 80.620(o).

(7) Information regarding credits, kept separately for each calendar year compliance period, kept separately for each refinery and in the case of importers, kept separately for imports into each CTA, and designated as motor vehicle diesel fuel credits and kept separately from NRLM credits, as follows:

(i) The number of credits in the refiner's or importer's possession at the beginning of the calendar year;

(ii) The number of credits generated;

(iii) The number of credits used;

(iv) If any were obtained from or transferred to other parties, for each such other party, its name, its EPA refiner or importer registration number consistent with § 80.593(d), in the case of credits generated by an importer the port and CTA of import of the diesel fuel that generated the credits, and the number obtained from, or transferred to, the other party;

(v) The number in the refiner's or importer's possession that will carry over into the subsequent calendar year compliance period; and

(vi) Commercial documents that establish each transfer of credits from the transferor to the transferee.

(8) The calculations used to determine compliance with the volume requirements of this subpart.

(9) The calculations used to determine the number of credits generated.

(10) A copy of reports submitted to EPA under § 80.593.

(c) *Additional records importers must keep.* Any importer shall keep records that identify and verify the source of each batch of certified diesel fuel program foreign refiner DFR-Diesel and non-certified DFR-Diesel imported and demonstrate compliance with the requirements under § 80.620.

(d) *Length of time records must be kept.* The records required in this section shall be kept for five years from the date they were created, except that records relating to credit transfers shall be kept by the transferor for 5 years from the date the credits were transferred, and shall be kept by the transferee for 5 years from the date the credits were transferred, used or terminated, whichever is later.

(e) *Make records available to EPA.* On request by EPA, the records required in this section must be made available to the Administrator or the Administrator's representative. For records that are electronically generated or maintained, the equipment and software necessary to read the records shall be made available, or if requested by EPA, electronic records shall be converted to paper documents which shall be provided to the Administrator's authorized representative.

(f) *Additional records to be kept by aggregated facilities consisting of a refinery and a truck loading terminal.* In addition to the records required by paragraph (a) of this section, such aggregated facilities must also keep the following records beginning June 1, 2006:

(1) The following information for each batch of motor vehicle diesel fuel produced by the refinery and sent over the aggregated facility's truck rack:

(i) The batch volume;

(ii) The batch number, assigned under the batch numbering procedures under §§ 80.65(d)(3) and 80.502(d)(1);

(iii) The date of receipt or import;

(iv) A record designating the batch as motor vehicle diesel fuel meeting the 500 ppm sulfur standard or as motor vehicle diesel fuel meeting the 15 ppm sulfur standard; and,

(v) A record indicating the volumes that were either taxed, dyed, or dyed and marked.

(2) Volume reports for all motor vehicle diesel fuel from external sources (*i.e.*, from another refiner or importer), as described in § 80.601(f)(2), sent over the aggregated facility's truck rack.

[66 FR 5136, Jan. 18, 2001, as amended at 69 FR 39189, June 29, 2004; 70 FR 70510, Nov. 22, 2005; 71 FR 25719, May 1, 2006]

§ 80.593 What are the reporting requirements for refiners and importers of motor vehicle diesel fuel subject to temporary refiner relief standards?

Beginning with 2006, or the first compliance period during which credits are

generated under § 80.531(b) or (c), whichever is earlier, any refiner or importer who produces or imports motor vehicle diesel fuel subject to the 500 ppm sulfur standard under § 80.520(c), or any refiner or importer who generates, uses, obtains, or transfers credits under §§ 80.530 through 80.532, and continuing for each year thereafter, must submit to EPA annual reports that contain the information required in this section, and such other information as EPA may require:

(a) *Refiners and importers.* Refiners and importers must report the following information separately for each refinery or CTA, in the case of importers, subject to a phase-in sulfur standard, small refiner standard or temporary refiner relief sulfur standard, or who generates, uses or transfers credits under §§ 80.530 through 80.532:

(1) The refiner's name and the EPA refinery registration number.

(2) For all motor vehicle diesel fuel produced for use in the United States during the compliance period:

(i) The total volume of motor vehicle diesel fuel produced;

(ii) The volume, in gallons, that complied with a sulfur content standard of 500 ppm; and

(iii) The volume, in gallons, that complied with the 15 ppm sulfur content standard.

(3) The percentage of the volume of motor vehicle diesel fuel produced during the compliance period that met the 15 ppm sulfur standard and the percentage that met the 500 ppm sulfur standard prior to the application of any volume credits.

(4) The percentage of volume of motor vehicle diesel fuel produced meeting the 15 ppm sulfur standard after the inclusion of any credits.

(5) Information regarding credits, separately for each refinery and for credits or debits related to imported motor diesel fuel, separately by importer and separately by CTA of import as follows:

(i) The CTA of the refiner's refinery or the importer's or the foreign refiner's CTA and port of importation;

(ii) The number of credits at the beginning of the compliance period;

(iii) The number of credits generated;

(iv) The number of credits used;

(v) If any credits were obtained from or transferred to other refineries or import ports, for each other refinery or importer, its name, address (or Port) and CTA, EPA refinery or importer registration number, and the number of credits obtained from or transferred to the other refinery or importer (by import CTA);

(vi) The number of credits, if any, that will carry over to the subsequent compliance period; and

(vii) The number of credits in deficit that must be made up for the following year;

(6) The reporting requirements under § 80.620, if applicable.

(7) For each batch of motor vehicle diesel fuel produced or imported during the compliance period:

(i) The batch number assigned using the batch numbering conventions under § 80.65(d)(3) and the appropriate designation under § 80.598.

(ii) The date the batch was produced; and

(iii) The volume of the batch, in gallons.

(8) When submitting reports under this paragraph (a), any importer shall exclude certified DFR-Diesel.

(b) *Additional reporting requirements for importers.* Importers of motor vehicle diesel fuel subject to the 500 ppm sulfur standard must report the following information:

(1) The importer's name and EPA registration number.

(2) For each foreign refinery from which motor vehicle diesel fuel is imported that is subject to a sulfur standard under § 80.520(c), the importer must report, for each batch of diesel fuel imported, the information required to be reported under § 80.620(o).

(c) *Report submission.* Any annual report required by this section shall be:

(1) Signed and certified as meeting all the applicable requirements of this subpart by the owner or a responsible corporate officer of the refiner or importer; and

(2) Submitted to EPA no later than August 31 for the prior annual compliance period.

[66 FR 5136, Jan. 18, 2001, as amended at 69 FR 39190, June 29, 2004; 70 FR 70510, Nov. 22, 2005; 75 FR 22972, Apr. 30, 2010]

§ 80.594 What are the pre-compliance reporting requirements for motor vehicle diesel fuel?

(a) Except as provided in paragraph (d) of this section, beginning on June 1, 2003, and on June 1, 2004 and June 1, 2005, all refiners and importers planning to produce or import motor vehicle diesel fuel subject to the provisions of this subpart, shall submit the following information to EPA:

(1) Any changes to the information submitted for the company registration;

(2) Any changes to the information submitted for any refinery or import facility registration;

(3) An estimate of the average daily volumes (in gallons) of each sulfur grade of motor vehicle diesel fuel produced (or imported) at each refinery (or import facility). These volume estimates must be provided both for fuel produced from crude oil, as well as any fuel produced from other sources, and must be provided for the periods of June 1, 2006 through December 31, 2006, January 1, 2007 through December 31, 2007, January 1, 2008 through December 31, 2008, January 1, 2009 through December 31, 2009, and January 1, 2010 through May 31, 2010, for each refinery and import facility;

(4) If expecting to participate in the temporary compliance options provisions and the credit trading program, estimates of the number of credits to be generated and/or used each year the program is applicable;

(5) Information on project schedule by quarter of known or projected completion date by the stage of the project, for example, following the five project phases described in EPA's June 2002 Highway Diesel Progress Review report (EPA420–R–02–016, *http://www.epa.gov/otaq/regs/hd2007/420r02016.pdf*): Strategic planning, Planning and front-end engineering, Detailed engineering and permitting, Procurement and construction, and Commissioning and startup;

(6) Basic information regarding the selected technology pathway for compliance (*e.g.*, conventional hydrotreating vs. other technologies, revamp vs. grassroots, etc.);

(7) Whether capital commitments have been made or are projected to be made; and

(8) The pre-compliance reports due 2004 and 2005 must provide an update of the progress in each of these areas.

(b) Beginning on June 1, 2003, all approved motor vehicle diesel fuel small refiners shall submit the following additional information to EPA, as applicable:

(1) In the case of a refinery with an approved application under § 80.552(a):

(i) A showing that sufficient sources of 15 ppm motor vehicle diesel fuel will likely be available in its marketing area after June 1, 2006 and through 2010;

(ii) If after 2003 the sources of 15 ppm motor vehicle diesel fuel decrease, the pre-compliance reports for 2004 and/or 2005 must identify this change and must include a supplementary showing that the sources of 15 ppm motor vehicle diesel fuel are still sufficient.

(2) In the case of a refinery with an approved application under § 80.552(c), a demonstration that by June 1, 2006, 95 percent of its motor vehicle diesel fuel will be at 15 ppm sulfur at a volume meeting the requirements of § 80.553(e).

(c) For each refiner and importer approved under § 80.540, a demonstration that by June 1, 2006, 95 percent of its motor vehicle diesel fuel will be at 15 ppm sulfur at a volume of meeting the requirements of § 80.540(e).

(d) By July 1, 2006, each refiner and importer of motor vehicle diesel fuel shall submit a report to EPA stating that the production or importation of 15 ppm sulfur motor vehicle diesel fuel commenced by June 1, 2006.

(e) The pre-compliance reporting requirements of this section do not apply to refineries subject to the provisions of § 80.513.

[66 FR 5136, Jan. 18, 2001, as amended at 69 FR 39190, June 29, 2004; 70 FR 40896, July 15, 2005]

§ 80.595 How does a small or GPA refiner apply for a motor vehicle diesel fuel volume baseline for the purpose of extending their gasoline sulfur standards?

(a) Any small refiner applying for an extension of the duration of its small refiner gasoline sulfur standards of § 80.240, under §§ 80.552(c) and 80.553, any small refiner applying to produce MVDF under § 80.552(a), or any refiner

applying for an extension of the duration of the GPA standards under § 80.540 must apply for a motor vehicle diesel fuel volume baseline by December 31, 2001. A separate volume baseline must be sought for each refinery for which application of the provisions of § 80.553 or § 80.540 is sought.

(b) The volume baseline must be sent via certified mail with return receipt or express mail with return receipt to: U.S. EPA-Attn: Diesel Baseline, 1200 Pennsylvania Avenue, NW. (6406J), Washington, DC 20460 (certified mail/return receipt) or Attn: Diesel Baseline, Transportation and Regional Programs Division, 501 3rd Street, NW. (6406J), Washington, DC 20001 (express mail/return receipt).

(c) The motor vehicle diesel fuel volume baseline application must include the following information:

(1) A listing of the names and addresses of all refineries owned by the refiner for which the refiner is applying for a motor vehicle diesel fuel volume baseline.

(2) The average annual volume (in gallons) of motor vehicle diesel fuel produced for U.S. use in 1998 and 1999, for each refinery for which the refiner is applying for such baseline, calculated in accordance with § 80.596. The refiner shall follow the procedures, applicable to volume baselines and using motor vehicle diesel fuel instead of gasoline, specified in §§ 80.91 through 80.93 to establish the volume of motor vehicle diesel fuel that was produced for U.S. use in 1998 and 1999 for purposes of establishing a volume baseline under this section.

(3) A letter signed by the president, chief operating, or chief executive officer of the company, or his/her delegate, stating that the information contained in the volume baseline determination is true to the best of his/her knowledge.

(4) Name, address, phone number, facsimile number, and e-mail address (if available) of a corporate contact person.

(5) The following information for each batch of motor vehicle diesel fuel produced for U.S. use in 1998 and 1999:

(i) Batch number assigned to the batch under procedures such as those in § 80.65(d) or § 80.101(i), or, if unavailable, such other identifying information as is available; and

(ii) Volume of the batch, in gallons.

(6) For a refinery that was not in operation during part or all of the period 1998 and 1999, the information required under this paragraph (c) for the motor vehicle diesel fuel produced for U.S. use during the most recent calendar year that the refinery was in operation after the refinery was reactivated.

(d) Within 120 days of receipt of an application under this section, EPA will notify the refiner of an approval of the refinery's baseline, or of any deficiencies in the application.

(e) If at any time the baseline submitted in accordance with the requirements of this section is determined to be incorrect, EPA will notify the refiner of the corrected baseline. The corrected baseline shall apply to all applicable compliance calculations under this subpart.

(f)(1) If insufficient information is available for the Administrator to establish a baseline under the provisions of paragraph (c) of this section and § 80.596(a), the refiner shall submit additional information sufficient for the Administrator to establish a baseline.

(2) To satisfy the requirements of paragraph (f)(1) of this section, the Administrator may require, and consider, any information pertinent to establish a baseline, including:

(i) Motor vehicle diesel fuel production volumes for other years;

(ii) Crude capacity of the refinery;

(iii) The ratio, or the typical ratio, for other similarly sized or configured refineries, between motor vehicle diesel fuel production and gasoline production.

[66 FR 5136, Jan. 18, 2001, as amended at 70 FR 40896, July 15, 2005]

§ 80.596 How is a refinery motor vehicle diesel fuel volume baseline calculated?

(a) For purposes of this subpart, a refinery's motor vehicle diesel fuel volume baseline is calculated using the following equation:

$$V_{Base} = \frac{\sum_{i=1}^{n}(V_i)}{m/12}$$

Where:

V_{base} = Volume baseline value, in gallons.

V_i = Volume of motor vehicle diesel fuel batch i, in gallons.

n = Total number of batches of motor vehicle diesel fuel produced for U.S. use during January 1, 1998 through December 31, 1999 (or the total number of batches of motor vehicle diesel fuel produced during the most recent calendar year the refinery was in operation after being reactivated pursuant to § 80.595(c)(6)); or, for a foreign refinery, the total number of batches of motor vehicle diesel fuel produced and imported into the U.S. during January 1, 1998 through December 31, 1999 (or the total number of batches of motor vehicle diesel fuel produced and imported into the U.S. during the most recent calendar year the refinery was in operation after being reactivated pursuant to § 80.595(c)(6)).

i = Individual batch of motor vehicle diesel fuel produced during January 1, 1998 through December 31, 1999 (or individual batch of motor vehicle diesel fuel produced during the most recent calendar year the refinery was in operation after being reactivated pursuant to § 80.595(c)(6)); or, for a foreign refinery, individual batch of motor vehicle diesel fuel produced and imported into the U.S. during January 1, 1998 through December 31, 1999 (or individual batch of motor vehicle diesel fuel produced and imported into the U.S. during the most recent calendar year the refinery was in operation after being reactivated pursuant to § 80.595(c)(6)).

m = Number of months in the baseline period (24 except in the case of a startup or reactivation).

(b) If insufficient information is available for the Administrator to establish a baseline under paragraph (a) of this section, the baseline may be determined under the provisions of § 80.595(f).

[66 FR 5136, Jan. 18, 2001, as amended at 70 FR 40896, July 15, 2005]

§ 80.597 What are the registration requirements?

The following registration requirements apply under this subpart:

(a) *Registration for motor vehicle diesel fuel.* Refiners having any refinery that is subject to a sulfur standard under § 80.520(a), and importers importing such diesel fuel, must provide EPA the information under § 80.76, if such information has not been provided under the provisions of this part. In addition, for each import facility, the same identifying information as required for each refinery under § 80.76(c) must be provided.

(b) *Registration for NRLM diesel.* Refiners and importers that intend to produce or supply NRLM diesel fuel by June 1, 2007, must provide EPA the information under § 80.76 no later than December 31, 2005, if such information has not been provided under the provisions of this part. In addition, for each import facility, the same identifying information as required for each refinery under § 80.76(c) must be provided.

(c) *Registration for ECA marine fuel.* Refiners and importers that intend to produce or supply ECA marine fuel beginning June 1, 2014, must provide EPA the information under § 80.76 no later than December 31, 2012, if such information has not been previously provided under the provisions of this part. In addition, for each import facility, the same identifying information as required for each refinery under § 80.76(c) must be provided.

(d) *Entity registration.* (1) Except as prescribed in paragraph (d)(6) of this section, each entity as defined in § 80.502 that intends to deliver or receive custody of any of the following fuels from June 1, 2006 through May 31, 2010, must register with EPA by December 31, 2005, or six months prior to commencement of producing, importing, or distributing any distillate listed in paragraphs (d)(1)(i) through (d)(1)(iii) of this section:

(i) Fuel designated as 500 ppm sulfur MVNRLM diesel fuel under § 80.598 on which taxes have not been assessed pursuant to IRS code (26 CFR part 48).

(ii) Fuel designated as 15 ppm sulfur MVNRLM diesel fuel under § 80.598 on which taxes have not been assessed pursuant to IRS code (26 CFR part 48).

(iii) Fuel designated as NRLM diesel fuel under § 80.598 that is undyed pursuant to § 80.520.

(iv) Fuel designated as California Diesel fuel under § 80.598 on which taxes have not been assessed and red dye has not been added (if required) pursuant to IRS code (26 CFR part 48) and that is delivered by pipeline to a terminal outside of the State of California pursuant to the provisions of § 80.617(b).

(2) Except as prescribed in paragraph (d)(6) of this section, each entity as defined in § 80.502 that intends to deliver or receive custody of any of the following fuels from June 1, 2007, through May 31, 2014, must register with EPA by December 31, 2005, or six months prior to commencement of producing, importing, or distributing any distillate listed in paragraph (d)(1) of this section:

(i) Fuel designated as 500 ppm sulfur MVNRLM diesel fuel under § 80.598 on which taxes have not been assessed pursuant to IRS code (26 CFR part 48).

(ii) Fuel designated as NRLM diesel fuel under § 80.598 that is undyed pursuant to § 80.520.

(iii) Fuel designated as heating oil under § 80.598 that is unmarked pursuant to § 80.510(d) through (f).

(iv) Fuel designated as LM diesel fuel under § 80.598(a)(2)(iii) that is unmarked pursuant to § 80.510(e).

(3) Except as prescribed in paragraph (d)(6) of this section, each entity as defined in § 80.502 that intends to deliver or receive custody of any of the following fuels beginning June 1, 2014, must register with EPA by December 31, 2012, or prior to commencement of producing, importing, or distributing any distillate or residual fuel listed in this paragraph (d):

(i) Fuel designated as 1,000 ppm sulfur ECA marine fuel under § 80.598.

(ii) Fuel designated as 500 ppm LM diesel fuel.

(4) Registration shall be on forms prescribed by the Administrator, and shall include the name, business address, contact name, telephone number, e-mail address, and type of production, importation, or distribution activity or activities engaged in by the entity.

(5) Registration shall include the information required under paragraph (e) of this section for each facility owned or operated by the entity that delivers or receives custody of a fuel described in paragraphs (d)(1) through (3) of this section.

(6) *Exceptions for Excluded Liquids.* An entity that would otherwise be required to register pursuant to the requirements of paragraphs (d)(1) through (3) of this section is exempted from the registration requirements under this section provided that:

(i) The only diesel fuel or heating oil that the entity delivers or receives on which taxes have not been assessed or which is not received dyed pursuant to IRS code 26 CFR part 48 is an excluded liquid as defined pursuant to IRS code 26 CFR 48.4081–1(b).

(ii) The entity does not transfer the excluded liquid to a facility which delivers or receives diesel fuel other than an excluded liquid on which taxes have not been assessed pursuant to IRS code (26 CFR part 48).

(e) *Facility registration.* (1) List for each separate facility of an entity required to register under paragraph (d) of this section, the facility name, physical location, contact name, telephone number, e-mail address and type of facility. For facilities that are aggregated under § 80.502, provide information regarding the nature and location of each of the components. If aggregation is changed for any subsequent compliance period, the entity must provide notice to EPA prior to the beginning of such compliance period.

(2) If facility records are kept off-site, list the off-site storage facility name, physical location, contact name, and telephone number.

(3) *Mobile facilities:* (i) A description shall be provided in the registration detailing the types of mobile vessels that will likely be included and the nature of the operations.

(ii) Entities may combine all mobile operations into one facility; or may split the operations by vessel, region, route, waterway, *etc.* and register separate mobile facilities for each.

(iii) The specific vessels need not be identified in the registration, however information regarding specific vessel contracts shall be maintained by each registered entity for its mobile facilities, pursuant to § 80.602(d).

(f) *Changes to registration information.* Any company or entity shall submit updated registration information to the Administrator within 30 days of any occasion when the registration information previously supplied for an entity, or any of its registered facilities, becomes incomplete or inaccurate.

(g) *Issuance of registration numbers.* EPA will supply a registration number to each entity and a facility registration number to each of an entity's facilities that is identified, which shall be used in all reports to the Administrator.

[69 FR 39190, June 29, 2004, as amended at 70 FR 70510, Nov. 22, 2005; 71 FR 25720, May 1, 2006; 75 FR 22972, Apr. 30, 2010; 77 FR 75880, Dec. 26, 2012]

§ 80.598 What are the designation requirements for refiners, importers, and distributors?

(a) *Designation requirements for refiners and importers.* (1) Any refiner or importer shall accurately and clearly designate all fuel it produces or imports for use in diesel motor vehicles as either motor vehicle diesel fuel meeting the 15 ppm sulfur standard under § 80.520(a)(1) or as motor vehicle diesel fuel meeting the 500 ppm sulfur standard under § 80.520(c).

(2) Subject to the restrictions in paragraph (a)(3) of this section, beginning June 1, 2006, any refiner or importer shall accurately and clearly designate each batch of diesel fuel or distillate fuel for which they transfer custody to another entity, according to the following categories, including specifying its volume:

(i) Designate the fuel as one of the following fuel types:

(A) Motor vehicle, nonroad, locomotive or marine (MVNRLM) diesel fuel.

(B) Heating oil.

(C) Jet fuel.

(D) Kerosene.

(E) No. 4 fuel.

(F) Distillate fuel for export only.

(G) Exempt distillate fuels such as fuels that are covered by a national security exemption under § 80.606, fuels that are used for purposes of research and development pursuant to § 80.607, and fuels used in the U.S. Territories pursuant to § 80.608 (including additional identifying information).

(H) ECA marine fuel. This designation may be used beginning June 1, 2014, and fuel designated as such is subject to the restrictions in paragraph (a)(3)(xv) of this section.

(ii) From June 1, 2006 through May 31, 2014 any batch designated as MVNRLM diesel fuel must also be designated as one of the following:

(A) Motor vehicle diesel fuel; or

(B) NRLM diesel fuel.

(iii) From June 1, 2010 through May 31, 2012 any batch designated as NRLM must also be designated as one of the following:

(A) NR diesel fuel; or

(B) LM diesel fuel.

(iv) Until June 1, 2014, any batch designated as MVNRLM diesel fuel must also be designated according to one of the following three sulfur level specifications:

(A) 15 ppm if its sulfur content is less than or equal to 15 ppm.

(B) 500 ppm if its sulfur content is less than or equal to 500 ppm.

(C) High Sulfur if its sulfur content is greater than 500 ppm.

(v) From June 1, 2006, through May 31, 2010, any batch designated as motor vehicle diesel fuel must also be designated according to one of the following distillation classifications that most accurately represents the fuel:

(A) #1D.

(B) #2D.

(C) NP diesel (NP).

(3) The following restrictions and clarifications apply:

(i) Prior to June 1, 2006, any batch of MVNRLM not containing visible evidence of red dye under § 80.520(b) must be designated as motor vehicle diesel fuel.

(ii) Any distillate fuel containing visible evidence of dye may not be designated as motor vehicle diesel fuel unless it is further designated as tax exempt motor vehicle diesel fuel.

(iii) Any distillate containing the marker required pursuant to the provisions of § 80.510(d) through (f) must be designated as heating oil, except that from June 1, 2010 through May 31, 2012 it may also be designated as LM diesel fuel, pursuant to § 80.510(e).

(iv) Prior to June 1, 2009 all 15 ppm sulfur MVNRLM diesel fuel must be designated as motor vehicle diesel fuel. A refiner that has been approved as a NRLM diesel fuel small refiner under § 80.551(g) and has elected to use the compliance option specified under § 80.554(d) may also designate 15 ppm sulfur MVNRLM fuel as NRLM diesel fuel beginning June 1, 2006.

(v) Beginning June 1, 2010 any distillate fuel having a sulfur content greater than 15 ppm may not be designated as motor vehicle diesel fuel.

(vi) Beginning June 1, 2014, any distillate fuel having a sulfur content greater than 15 ppm may not be designated as MVNRLM diesel fuel.

(vii) Any batch of #1D fuel which is suitable for use as MVNRLM and which is also suitable for use as kerosene or jet fuel (*i.e.*, commonly referred to as dual use kerosene) may be designated as MVNRLM, kerosene, or jet fuel (as applicable).

(viii) Beginning June 1, 2007, any distillate fuel with a sulfur content greater than 500 ppm distributed or intended for distribution in the area specified in § 80.510(g)(1), may not be designated as MVNRLM diesel fuel.

(ix) From June 1, 2010 through May 31, 2012, any distillate fuel with a sulfur content greater than 15 ppm distributed or intended for distribution in the area specified in § 80.510(g)(1), may not be designated as NR diesel fuel.

(x) From June 1, 2012 through May 31, 2014, any distillate fuel with a sulfur content greater than 15 ppm distributed or intended for distribution in the area specified in § 80.510(g)(1), may not be designated as NRLM diesel fuel.

(xi) Beginning June 1, 2007, any distillate fuel with a sulfur content greater than 500 ppm distributed or intended for distribution in the area specified in § 80.510(g)(2) may not be designated as NRLM diesel fuel unless EPA has first approved a compliance plan for the refiner for segregating the fuel from all other types of NRLM diesel fuel from the refinery gate to the ultimate consumer, as specified under § 80.554(a)(4).

(xii) From June 1, 2010 through May 31, 2012, any distillate fuel with a sulfur content greater than 15 ppm distributed or intended for distribution in the area specified in § 80.510(g)(2) may not be designated as NR diesel fuel unless EPA has first approved a compliance plan for the refiner for segregating the fuel from all other types of NRLM diesel fuel from the refinery gate to the ultimate consumer, as specified under § 80.554(b)(4).

(xiii) From June 1, 2012 through May 31, 2014, any distillate fuel with a sulfur content greater than 15 ppm distributed or intended for distribution in the area specified in § 80.510(g)(2) may not be designated as NRLM diesel fuel unless, EPA has first approved a compliance plan for the refiner for segregating the fuel from all other types of NRLM diesel fuel from the refinery gate to the ultimate consumer, as specified under § 80.554(b)(4).

(xiv) Beginning June 1, 2014, any distillate fuel with a sulfur content greater than 15 ppm may not be designated as MVNRLM diesel fuel.

(xv) Beginning June 1, 2014, any fuel designated as ECA marine fuel will be subject to all the following restrictions:

(A) Such fuel may not exceed a sulfur level of 1,000 ppm.

(B) Such fuel may only be produced, distributed, sold, and purchased for use in C3 marine vessels.

(b) *Designation requirements for fuel distributors.* (1) Pursuant to the provisions of paragraphs (b)(2) through (b)(9) of this section, beginning June 1, 2006, any distributor shall accurately and clearly designate each batch of diesel fuel or distillate fuel for which they transfer custody to another facility, including specifying its volume, as specified in this paragraph (b). Distributors must also accurately and clearly classify such diesel fuel and distillate fuel by sulfur content, while it is in their custody between receipt and delivery.

(2) From June 1, 2006 through May 31, 2009, whenever custody of a batch of 15 ppm sulfur motor vehicle diesel fuel is transferred to another facility, the entity transferring custody must accurately and clearly designate the batch as one of the following and specify its volume:

(i) #1D 15 ppm sulfur motor vehicle diesel fuel.

(ii) #2D 15 ppm sulfur motor vehicle diesel fuel.

(iii) Fuel that meets the requirements specified in § 80.616 which is transferred by a pipeline facility to a terminal facility outside of the State of California pursuant to § 80.617(b) may be designated as California diesel fuel. Such fuel must subsequently be redesignated by the receiving terminal as either #1D or #2D 15 ppm motor vehicle diesel fuel, or segregated for delivery by tank truck to a retail or wholesale

purchaser consumer facility inside the State of California pursuant to § 80.617(b)(2).

(iv) NP 15 ppm sulfur motor vehicle diesel fuel.

(3) From June 1, 2009 through May 31, 2010, whenever custody of a batch of 15 ppm sulfur MVNRLM diesel fuel is transferred to another facility, the entity transferring custody must accurately and clearly designate the batch as one of the following and specify its volume:

(i) #1D 15 ppm sulfur motor vehicle diesel fuel.

(ii) #2D 15 ppm sulfur motor vehicle diesel fuel.

(iii) 15 ppm sulfur NRLM diesel fuel.

(iv) Fuel that meets the requirements specified in § 80.616 that is transferred by a pipeline facility to a terminal facility outside of the State of California pursuant to § 80.617(b) may be designated as California diesel fuel. Such fuel must either be redesignated by the receiving terminal as either #1D or #2D 15 ppm motor vehicle diesel fuel as prescribed in paragraph (b)(9)(xvi) of this section, or segregated for delivery by tank truck to a retail or wholesale purchaser consumer facility inside the State of California pursuant to § 80.617(b)(2).

(v) NP 15 ppm sulfur motor vehicle diesel fuel.

(4) From June 1, 2006 through May 31, 2010, whenever custody of a batch of undyed, 500 ppm sulfur MVNRLM is transferred to another facility, the entity transferring custody must accurately and clearly designate the batch as one of the following and specify its volume:

(i) #1D 500 ppm sulfur motor vehicle diesel fuel.

(ii) #2D 500 ppm sulfur motor vehicle diesel fuel.

(iii) 500 ppm sulfur NRLM diesel fuel.

(iv) NP 500 ppm sulfur motor vehicle diesel fuel.

(5) From June 1, 2007 through May 31, 2010, whenever custody of a batch of distillate fuel (other than jet fuel, kerosene, No. 4 fuel, or fuel for export) having a sulfur content greater than 500 ppm is transferred to another facility, the entity transferring custody must accurately and clearly designate the batch as one of the following and specify its volume:

(i) High sulfur NRLM diesel fuel (HSNRLM);

(ii) Heating oil; or

(iii) Exempt distillate fuels such as fuels that are covered by a national security exemption under § 80.606, fuels that are used for purposes of research and development pursuant to § 80.607, and fuels used in the U.S. Territories pursuant to § 80.608 (including additional identifying information).

(6) From June 1, 2010 through May 31, 2012, whenever custody of a batch of distillate fuel (other than jet fuel, kerosene, No. 4 fuel, or fuel for export) having a sulfur content greater than 15 ppm is transferred to another facility, the entity transferring custody must accurately and clearly designate the batch as one of the following and specify its volume:

(i) 500 ppm sulfur NR diesel fuel;

(ii) 500 ppm sulfur LM diesel fuel;

(iii) Heating oil; or

(iv) Exempt distillate fuels such as fuels that are covered by a national security exemption under § 80.606, fuels that are used for purposes of research and development pursuant to § 80.607, and fuels used in the U.S. Territories pursuant to § 80.608 (including additional identifying information).

(7) From June 1, 2012 through May 31, 2014, whenever custody of a batch of distillate fuel (other than jet fuel, kerosene, No. 4 fuel, or fuel for export) having a sulfur content greater than 15 ppm is transferred to another facility, the entity transferring custody must accurately and clearly designate the batch as one of the following and specify its volume:

(i) 500 ppm sulfur NRLM diesel fuel.

(ii) Heating oil.

(iii) Exempt distillate fuels such as fuels that are covered by a national security exemption under § 80.606, fuels that are used for purposes of research and development pursuant to § 80.607, and fuels used in the U.S. Territories pursuant to § 80.608 (including additional identifying information).

(8) Beginning June 1, 2014, whenever custody of a batch of distillate or residual fuel (other than jet fuel, kerosene, No. 4 fuel, fuel for export, fuel intended

for use outside an ECA, or fuel otherwise allowed to be used under 40 CFR part 1043) having a sulfur content greater than 15 ppm is transferred to another facility, the entity transferring custody must accurately and clearly designate the batch as one of the following and specify its volume:

(i) ECA marine fuel.

(ii) Heating oil.

(iii) Exempt distillate fuels such as fuels that are covered by a national security exemption under § 80.606, fuels that are used for purposes of research and development pursuant to § 80.607, and fuels used in the U.S. Territories pursuant to § 80.608 (including additional identifying information).

(9) The following restrictions and clarifications apply. Subject to the provisions of this paragraph (b)(9) and subject to the dye and marker provisions of §§ 80.520(b) and 80.510(d) through (f), when custody of a batch of distillate fuel is transferred, the designation provided by the entity transferring custody pursuant to paragraphs (b)(1) through (b)(8) of this section may be different from the designation of the fuel when that same entity received custody.

(i) Any 500 ppm sulfur diesel fuel designated under this paragraph (b) and containing visible evidence of red dye may not be designated as motor vehicle diesel fuel.

(ii) Until June 1, 2014, any distillate fuel containing greater than or equal to 0.10 milligrams per liter of marker solvent yellow 124 required under § 80.510(d), (e), or (f) must be designated as heating oil except that from June 1, 2010, through November 30, 2012, it may also be designated as LM diesel fuel as specified under § 80.510(e).

(iii) Any batch of #1D fuel which is suitable for use as MVNRLM diesel fuel and which is also suitable for use as kerosene or jet fuel (*i.e.*, commonly referred to as dual use kerosene) may be designated as either MVNRLM diesel fuel, kerosene, or jet fuel (as applicable).

(iv) Any MVNRLM diesel fuel with a sulfur content of 500 ppm or less in inventory as of June 1, 2007 may be designated as motor vehicle diesel fuel.

(v) Batches or portions of batches of fuel received designated as 15 ppm sulfur #2D motor vehicle diesel fuel may be re-designated as 500 ppm sulfur motor vehicle diesel fuel, but only in accordance with the limitations of § 80.527(c).

(vi) Batches or portions of batches received designated as 500 ppm sulfur NRLM diesel fuel may be re-designated as 500 ppm sulfur motor vehicle diesel fuel by a truck loading terminal only if the terminal maintains a neutral or positive balance at the end of each quarterly compliance period on their motor vehicle diesel fuel volume from June 1, 2006 as calculated in § 80.599(b)(4).

(vii) Batches or portions of batches received designated as 500 ppm sulfur NRLM diesel fuel may be re-designated as 500 ppm sulfur motor vehicle diesel fuel by a facility other than a truck loading terminal only if the following restrictions are met:

(A) At the end of each annual compliance period, the facility has a neutral or positive balance on its motor vehicle diesel fuel volume from June 1, 2007 as calculated in § 80.599(b)(4); and

(B) At the end of each annual compliance period, the facility's balance for motor vehicle diesel fuel volume, from the beginning of the compliance period must be less than two percent of the total volume of motor vehicle diesel fuel received during the compliance period, as calculated in § 80.599(b)(5).

(viii) For facilities in areas other than those specified in § 80.510(g)(1) and (2), batches or portions of batches of unmarked distillate received designated as heating oil may be re-designated as NRLM or LM diesel fuel only if all the following restrictions are met:

(A) From June 1, 2007, through May 31, 2010, for any compliance period, the volume of high sulfur NRLM diesel fuel delivered from a facility cannot be greater than the volume received, unless the volume of heating oil delivered from the facility is also greater than the volume it received by an equal or greater proportion, as calculated in § 80.599(c)(2).

(B) From June 1, 2010, through May 31, 2014, for any compliance period, the volume of fuel designated as heating oil delivered from a facility cannot be less than the volume of fuel designated

as heating oil received, as calculated in § 80.599(c)(4).

(ix) For facilities in areas other than those specified in § 80.510(g)(1) and (g)(2), from June 1, 2010 through May 31, 2012, batches or portions of batches received designated as 500 ppm LM diesel fuel may be redesignated as 500 ppm NR diesel fuel only if for any compliance period the following restrictions are met:

(A) The volume of fuel designated as 500 ppm sulfur NR diesel fuel delivered from the facility cannot be greater than the volume received as calculated in § 80.599(d)(2)(i); or

(B) The volume of fuel designated as 500 ppm sulfur NR diesel fuel delivered from the facility in relation to the volume received is not a greater proportion than the volume of fuel designated as 500 ppm sulfur LM diesel fuel delivered from the facility in relation to the volume received, as calculated in § 80.599(d)(2)(ii).

(x) Notwithstanding the provisions of paragraphs (b)(5) and (8) of this section, beginning October 1, 2007:

(A) No distillate fuel with a sulfur content greater than 500 ppm distributed or intended for distribution in the areas specified in § 80.510(g)(1) and (g)(2), may be designated as NRLM diesel fuel, including LM diesel fuel except as provided in paragraph (b)(9)(xiii) of this section; and

(B) Distillate fuel with a sulfur content greater than 500 ppm distributed from within the areas specified in § 80.510(g)(1) and (g)(2) to areas outside these areas is subject to the provisions of paragraph (b)(5) of this section.

(xi) Notwithstanding the provisions of paragraphs (b)(6) through (b)(8) of this section, beginning October 1, 2010—

(A) No distillate fuel with a sulfur content greater than 15 ppm distributed or intended for distribution in the areas specified in § 80.510(g)(1) and (g)(2), may be designated as NR diesel fuel, except as provided in paragraph (b)(9)(xiv) of this section; and

(B) Distillate fuel with a sulfur content greater than 15 ppm distributed from within the areas specified in § 80.510(g)(1) and (g)(2) to areas outside these areas is subject to the provisions of paragraphs (b)(6) through (b)(7) of this section.

(xii) Notwithstanding the provisions of paragraphs (b)(7) and (8) of this section, beginning October 1, 2012—

(A) No distillate fuel with a sulfur content greater than 15 ppm distributed or intended for distribution in the areas specified in § 80.510(g)(1) and (g)(2), may be designated as NRLM diesel fuel, including LM diesel fuel, except as provided in paragraph (b)(9)(xv) of this section; and

(B) Distillate fuel with a sulfur content greater than 15 ppm distributed from within the areas specified in § 80.510(g)(1) and (g)(2) to areas outside these areas is subject to the provisions of paragraphs (b)(7) and (8) of this section.

(xiii) From June 1, 2007 through September 30, 2010, in the area specified in § 80.510(g)(2) only segregated batches of distillate fuel received designated as HSNRLM diesel fuel may be distributed designated as HSNRLM diesel fuel and must remain segregated from fuel with any other designations unless otherwise approved by EPA in a refiner compliance plan under § 80.554(a)(4).

(xiv) From June 1, 2010 through September 30, 2012, in the area specified in § 80.510(g)(2) only segregated batches of distillate fuel received designated as 500 ppm sulfur NR diesel fuel may be distributed designated as 500 ppm sulfur NR diesel fuel and must remain segregated from fuel with any other designations and from any other 500 ppm sulfur NRLM diesel fuel from any other sources, except as approved by EPA in a refiner compliance plan under § 80.554(a)(4).

(xv) From June 1, 2012 through September 30, 2014, in the area specified in § 80.510(g)(2) only segregated batches of distillate fuel received designated as 500 ppm sulfur NRLM diesel fuel may be distributed designated as 500 ppm sulfur NRLM diesel fuel and must remain segregated from fuel with any other designations and from any other 500 ppm sulfur NRLM diesel fuel from any other sources, except as approved by EPA in a refiner compliance plan under § 80.554(a)(4).

(xvi) Fuel designated as California diesel fuel under paragraph (b)(3)(iv) of

this section that is received by a terminal facility pursuant to the provisions of § 80.617(b)(1) must be redesignated as either #1D or #2D 15 ppm motor vehicle diesel fuel as prescribed in paragraph (b)(9)(xvi) of this section, or segregated for delivery by tank truck to a retail or wholesale purchaser consumer facility inside the State of California pursuant to § 80.617(b)(2).

(c) Notwithstanding the provisions of paragraph (b) of this section, an entity is not required to designate heating oil that is delivered from a facility that only receives heating oil which is marked pursuant to § 80.510(d) through (f).

(d) Notwithstanding the provisions of paragraph (b)(4) of this section, an entity is not required to designate 500 ppm sulfur MVNRLM diesel fuel that is delivered from a facility that only receives 500 ppm sulfur MVNRLM diesel fuel on which taxes have been paid or into which red dye has been added pursuant to § 80.520(b).

(e) Notwithstanding the provisions of paragraph (b)(6) of this section, an entity is not required to designate 500 ppm sulfur LM diesel fuel that is delivered from a facility that only receives 500 ppm sulfur LM diesel fuel which is marked pursuant to § 80.510(e).

(f) Any entity that is both a distributor and a refiner or importer must comply with the provisions of paragraph (a) of this section for all distillate fuel produced or imported, and the provisions of paragraph (b) of this section for all distillate fuel for which it acted as distributor but not refiner or importer.

(g) No refiner, importer, or distributor may use the designation provisions of this section to circumvent the standards or requirements of § 80.510, 80.511, or 80.520.

[69 FR 39191, June 29, 2004, as amended at 70 FR 70511, Nov. 22, 2005; 71 FR 25720, May 1, 2006; 75 FR 22973, Apr. 30, 2010; 77 FR 61294, Oct. 9, 2012]

§ 80.599 How do I calculate volume balances for designation purposes?

(a) Quarterly compliance periods. The quarterly compliance periods are shown in the following table:

Beginning date of quarterly compliance period	Ending date of quarterly compliance period
June 1, 2006	September 30, 2006.
October 1, 2006	December 31, 2006.
January 1, 2007	March 31, 2007.
April 1, 2007	May 31, 2007.
June 1, 2007	September 30, 2007.
October 1, 2007	December 31, 2007.
January 1, 2008	March 31, 2008.
April 1, 2008	June 30, 2008.
July 1, 2008	September 30, 2008.
October 1, 2008	December 31, 2008.
January 1, 2009	March 31, 2009.
April 1, 2009	June 30, 2009.
July 1, 2009	September 30, 2009.
October 1, 2009	December 31, 2009.
January 1, 2010	March 31, 2010.
April 1, 2010	May 31, 2010.
June 1, 2010	September 30, 2010.

(1) The annual compliance periods are shown in the following table:

Beginning date of annual compliance period	Ending date of annual compliance period
June 1, 2006	May 31, 2007.
June 1, 2007	June 30, 2008.
July 1, 2008	June 30, 2009.
July 1, 2009	May 31, 2010.
June 1, 2010	June 30, 2011.
July 1, 2011	May 31, 2012.
June 1, 2012	June 30, 2013.
July 1, 2013	May 31, 2014.

(2) [Reserved]

(b) *Volume balance for motor vehicle diesel fuel.* (1) A facility's motor vehicle diesel fuel volume balance is calculated as follows:

$$MVB = MV_I - MV_O - MV_{INVCHG}$$

Where:

MVB = the volume balance for motor vehicle diesel fuel for the compliance period.

MV_I = the total volume of all batches of fuel designated as motor vehicle diesel fuel received for the compliance period. Any motor vehicle diesel fuel produced by or imported into the facility shall also be included in this volume.

MV_O = the total volume of all batches of fuel designated as motor vehicle diesel fuel delivered for the compliance period.

MV_{INVCHG} = the total volume of 15 ppm sulfur and 500 ppm sulfur motor vehicle diesel fuel in inventory at the end of the compliance period minus the total volume of 15 ppm sulfur and 500 ppm sulfur motor vehicle diesel fuel in inventory at the beginning of the compliance period, including accounting for any corrections in inventory due to volume swell or shrinkage, difference in measurement calibration between receiving and delivering meters, and similar matters, where corrections that increase inventory are defined as positive.

(2) Calculate the motor vehicle diesel fuel received, as follows:

$$MV_I = MV15_I + MV500_I$$

Where:

$MV15_I$ = the total volume of all the batches of fuel designated as 15 ppm sulfur motor vehicle diesel fuel received for the compliance period. Any motor vehicle diesel fuel produced by or imported into the facility shall also be included in this volume. Any untaxed and undyed California diesel fuel received by a terminal pursuant to § 80.617 (b)(1) shall be included in this volume.

$MV500_I$ = the total volume of all batches of fuel designated as 500 ppm sulfur motor vehicle diesel fuel received for the compliance period. Any motor vehicle diesel fuel produced by or imported into the facility shall also be included in this volume.

(3) Calculate the motor vehicle diesel fuel delivered, as follows:

$$MV_O = MV15_O + MV500_O$$

Where:

$MV15_O$ = the total volume of all batches of fuel designated as 15 ppm sulfur motor vehicle diesel fuel and delivered during the compliance period.

$MV500_O$ = the total volume of all batches of fuel designated as 500 ppm sulfur motor vehicle diesel fuel and delivered during the compliance period.

(4) The neutral or positive volume balance required for purposes of compliance with § 80.598(b)(9)(vi) and (b)(9)(vii)(A) means that the net balance of motor vehicle diesel fuel in inventory as of the end of the last day of the compliance period ($MVNB_E$) must be greater than or equal to zero. MVNBE is defined by the following equation:

$$MVNB_E = MV15_{BINV} + MV500_{BINV} + \Sigma MVB$$

Where:

$MV15_{BINV}$ = the total volume of fuel designated as 15 ppm sulfur motor vehicle diesel fuel in inventory at the beginning of the program on June 1, 2006.

$MV500_{BINV}$ = the total volume of fuel designated as 500 ppm sulfur motor vehicle diesel fuel in inventory at the beginning of the program on June 1, 2006. Any #2D 500 ppm sulfur MVNRLM in inventory at the beginning of the program on June 1, 2006 may be designated as motor vehicle diesel fuel.

ΣMVB = the sum of the balances for motor vehicle diesel fuel for the current compliance period and previous compliance periods.

(5) The volume balance required for purposes of compliance with § 80.598(b)(9)(vii)(B) means:

$$-MVB \leq 0.02 \times MV_I$$

(6) Calculations in paragraphs (b)(4) and (b)(5) of this section may be combined for all facilities wholly owned by an entity.

(7) For purposes of calculations in paragraphs (b)(1) through (b)(5) of this section, for batches of fuel received from facilities without an EPA facility ID#, any batches of fuel received on which taxes have been paid pursuant to IRS code (26 CFR part 48) shall be deemed to be $MV15_I$ or $MV500_I$ as appropriate for purposes of this paragraph.

(c) *Volume balance for high sulfur NRLM diesel fuel and heating oil.* (1) A facility's high sulfur NRLM balance is calculated as follows:

$$HSNRLMB = HSNRLMI_I - HSNRLM_O - HSNRLM_{INVCHG}$$

Where:

HSNRLMB = the balance for high sulfur NRLM diesel fuel for the compliance period.

$HSNRLM_I$ = the total volume of all batches of fuel designated as high sulfur NRLM received diesel fuel for the compliance period. Any high sulfur NRLM produced by or imported into the facility shall also be included in this volume.

$HSNRLM_O$ = the total volume of all batches of fuel designated as high sulfur NRLM diesel fuel delivered for the compliance period.

$HSNRLM_{INVCHG}$ = the volume of high sulfur NRLM diesel fuel in inventory at the end of the compliance period minus the volume of high sulfur NRLM diesel fuel in inventory at the beginning of the compliance period, including accounting for any corrections in inventory due to volume swell or shrinkage, difference in measurement calibration between receiving and delivering meters, and similar matters, where corrections that increase inventory are defined as positive.

(2) The volume balance required for purposes of compliance with § 80.598(b)(9)(viii)(A) means one of the following:

(i) $HSNRLMB \geq 0$

(ii) $(HSNRLM_O + HSNRLM_{INVCHG}) / HSNRLM_I \leq (HO_O + HO_{INVCHG}) / HO_I$

(3) A facility's heating oil volume balance is calculated as follows:

$HOB = HO_I - HO_O - HO_{INVCHG}$

Where:

HOB = the balance for heating oil for the compliance period.

HO_I = the total volume of all batches of fuel designated as heating oil received for the compliance period. Any heating oil produced by or imported into the facility shall also be included in this volume.

HO_O = the total volume of all batches of fuel designated as heating oil delivered to all downstream entities for the compliance period.

HO_{INVCHG} = the volume of heating oil in inventory at the end of the compliance period minus the volume of heating oil in inventory at the beginning of the compliance period, including accounting for any corrections in inventory due to volume swell or shrinkage, difference in measurement calibration between receiving and delivering meters, and similar matters, where corrections that increase inventory are defined as positive.

(4) The volume balance required for purposes of compliance with § 80.598(b)(9)(viii)(B) means:

$HOB \leq 0$

(5) Calculations in paragraphs (c)(3) and (c)(4) of this section may be combined for all facilities wholly owned by an entity.

(6) For purposes of calculations in paragraphs (c)(1) through (c)(4) of this section, for batches of fuel received from facilities without an EPA facility ID#, any batches of fuel received marked pursuant to § 80.510(d) or (f) shall be deemed to be HO_I, any batches of fuel received marked pursuant to § 80.510(e) shall be deemed to be HO_I or $LM500_I$, any diesel fuel with less than or equal to 500 ppm sulfur that is dyed pursuant to § 80.520(b) and not marked pursuant to § 80.510(d) or (f) shall be deemed to be NRLM diesel fuel, and any diesel fuel with less than or equal to 500 ppm sulfur which is dyed pursuant to § 80.520(b) and not marked pursuant to § 80.510(e) shall be deemed to be NR diesel fuel.

(d) *Volume balance for NR diesel fuel.* (1) A facility's 500 ppm nonroad diesel fuel balance is calculated as follows:

$NR500B = NR500_I - NR500_O - NR500_{INVCHG}$

Where:

NR500B = the balance for 500 ppm sulfur NR diesel fuel for the compliance period.

$NR500_I$ = the total volume of all batches of fuel designated as 500 ppm sulfur NR diesel fuel received for the compliance period. Any 500 ppm sulfur NR diesel fuel produced by or imported into the facility shall also be included in this volume.

$NR500_O$ = the total volume of all batches of fuel designated as 500 ppm sulfur NR diesel fuel delivered for the compliance period.

$NR500_{INVCHG}$ = the volume of 500 ppm sulfur NR diesel fuel in inventory at the end of the compliance period minus the volume of 500 ppm sulfur NR diesel fuel in inventory at the beginning of the compliance period, and accounting for any corrections in inventory due to volume swell or shrinkage, difference in measurement calibration between receiving and delivering meters, and similar matters, where corrections that increase inventory are defined as positive.

(2) The volume balance required for purposes of compliance with § 80.598(b)(9)(ix) means one of the following:

(i) $NR500B \geq 0$

(ii) $(NR500_O + NR500_{INVCHG}) / NR500_I \leq (LM500_O + LM500_{INVCHG}) / LM500_I$.

Where:

$LM500_I$ = the total volume of all batches of fuel designated as 500 ppm sulfur LM diesel fuel received for the compliance period. Any 500 ppm sulfur LM diesel fuel produced by or imported into the facility shall also be included in this volume.

$LM500_O$ = the total volume of all batches of fuel designated as 500 ppm sulfur LM diesel fuel delivered for the compliance period.

$LM500_{INVCHG}$ = the volume of 500 ppm sulfur LM diesel fuel in inventory at the end of the compliance period minus the volume of 500 ppm sulfur LM diesel fuel in inventory at the beginning of the compliance period, and accounting for any corrections in inventory due to volume swell or shrinkage, difference in measurement calibration between receiving and delivering meters, and similar matters, where corrections that increase inventory are defined as positive.

(e) *Anti-downgrading for motor vehicle diesel fuel.* (1) A facility must satisfy the provisions in either paragraphs

(e)(2), (e)(3), (e)(4), or (e)(5) of this section to comply with the anti-downgrading limitation of paragraph § 80.527(c)(1), for the annual compliance periods defined in § 80.527(c)(3).

(2) The volume of #2D 15 ppm sulfur motor vehicle delivered must meet the following requirement:

$$(\#2MV15_O + \#2MV15_{INVCHG}) \geq 0.8 * \#2MV15_I$$

Where:

$\#2MV15_O$ = the total volume of fuel delivered during the compliance period that is designated as #2D 15 ppm sulfur motor vehicle diesel fuel.

$\#2MV15_{INVCHG}$ = the total volume of diesel fuel designated as #2D 15 ppm sulfur motor vehicle diesel fuel in inventory at the end of the compliance period minus the total volume of #2D 15 ppm sulfur motor vehicle diesel fuel in inventory at the beginning of the compliance period, and accounting for any corrections in inventory due to volume swell or shrinkage, difference in measurement calibration between receiving and delivering meters, and similar matters, where corrections that increase inventory are defined as positive.

$\#2MV15_I$ = the total volume of fuel received during the compliance period that is designated as #2D 15 ppm sulfur motor vehicle diesel fuel. Any untaxed and undyed California diesel fuel received by a terminal pursuant to § 80.617(b)(1) shall be included in this volume.

(3) The volume of #2D 500 ppm sulfur motor vehicle diesel fuel delivered must meet the following requirement:

$$\#2MV500_O \leq \#2MV500_I - \#2MV500_{INVCHG} + 0.2 * \#2MV15_I$$

Where:

$\#2MV500_O$ = the total volume of fuel delivered during the compliance period that is designated as #2D 500 ppm sulfur motor vehicle diesel fuel.

$\#2MV500_I$ = the total volume of fuel received during the compliance period that is designated as #2D 500 ppm sulfur motor vehicle diesel fuel.

$\#2MV500_{INVCHG}$ = the total volume of diesel fuel designated as #2D 500 ppm sulfur motor vehicle diesel fuel in inventory at the end of the compliance period minus the total volume of #2D 500 ppm sulfur motor vehicle diesel fuel in inventory at the beginning of the compliance period, and accounting for any corrections in inventory due to volume swell or shrinkage, difference in measurement calibration between receiving and delivering meters, and similar matters, where corrections that increase inventory are defined as positive.

(4) The following calculation may be used to account for wintertime blending of kerosene and the blending of non-petroleum diesel:

$$\#2MV500_O \leq \#2MV500_I + \#2MV500_P - \#2MV500_{INVCHG} + 0.2 * (\#1MV15_I + \#2MV15_I + NPMV15_I)$$

Where:

$\#1MV15_I$ = the total volume of fuel received during the compliance period that is designated as #1D 15 ppm sulfur motor vehicle diesel fuel. Any motor vehicle diesel fuel produced by or imported into the facility shall not be included in this volume.

$NPMV15_I$ = the total volume of fuel received during the compliance period that is designated as NP15 ppm sulfur motor vehicle diesel fuel. Any motor vehicle diesel fuel produced by or imported into the facility shall not be included in this volume.

$\#1MV15_P$ = the total volume of fuel produced by or imported into the facility during the compliance period that was designated as #1D 15 ppm sulfur motor vehicle diesel fuel when it was delivered.

(5) The following calculation may be used to account for wintertime blending of kerosene, the blending of non-petroleum diesel, and/or changes in the facility's volume balance of motor vehicle diesel fuel resulting from a temporary shift of 500 ppm sulfur NRLM diesel fuel to 500 ppm sulfur motor vehicle diesel fuel during the compliance period:

$$\#2MV500_O < \#2MV500_I + \#2MV500_P - \#2MV500_{INVCHG} + 0.2 * \#2MV15_I + \#1MV15_B + \#2NRLM500_S + NP_B$$

Where:

$\#1MV15_B$ = the total volume of fuel received during the compliance period that is designated as #1D 15 ppm sulfur motor vehicle diesel fuel and that the facility can demonstrate they blended into #2D 500 ppm sulfur motor vehicle diesel fuel. Any motor vehicle diesel fuel produced by or imported into the facility shall not be included in this volume.

$\#2MV500_P$ = the total volume of fuel produced by or imported into the facility during the compliance period that was designated as #2MV 500 ppm sulfur motor vehicle diesel fuel when it was delivered.

$\#2NRLM500_S$ = the total volume of #2D 500 ppm sulfur NRLM diesel fuel that the facility can demonstrate they redesignated

as #2D 500 ppm sulfur motor vehicle diesel fuel during the compliance period.

NP_B = the total volume of fuel received during the compliance period that is designated as NP15 ppm sulfur motor vehicle diesel fuel, and/or NP500 ppm sulfur motor vehicle diesel fuel which the facility can demonstrate they blended into #2D 500 ppm sulfur motor vehicle diesel fuel.

(f) *Inventory adjustments.* Adjustments to inventory under this section must be based on normal business practices for the industry, appropriate physical plant operations and use of good engineering judgments.

(g) *Unique circumstances.* EPA may, at its discretion, grant a fuel distributor's application to modify its inventory of motor vehicle diesel fuel, NRLM diesel fuel, or heating oil for a given compliance period. EPA may grant an application to address unique circumstances, where appropriate, such as the start up of a new pipeline or pipeline segment.

(h) *Additional requirements for aggregated facilities consisting of a refinery and a truck loading terminal.* In addition to the volume balance requirements required by paragraphs (a) through (g) of this section, aggregated facilities consisting of a refinery and a truck loading terminal are responsible for balance calculations on the volume difference between the total volume of diesel fuel sold over the truck loading terminal rack and the production volume from the batch reports. Mathematically, the difference will be the volume of fuel received from external sources and passed through to another facility.

[69 FR 39194, June 29, 2004, as amended at 70 FR 40896, July 15, 2005; 70 FR 70511, Nov. 22, 2005; 71 FR 25720, May 1, 2006; 75 FR 22974, Apr. 30, 2010]

§ 80.600 What records must be kept for purposes of the designate and track provisions?

(a) In addition to the requirements of § 80.592 and § 80.602, the following recordkeeping requirements shall apply to refiners and importers:

(1) Any refiner or importer shall maintain the records specified in paragraphs (a)(6) through (a)(10) of this section for each batch of distillate fuel that it transfers custody of and designates during the time period from June 1, 2006 through May 31, 2010, with the following categories:

(i) #1D 15 ppm sulfur motor vehicle diesel fuel;

(ii) #2D 15 ppm sulfur motor vehicle diesel fuel;

(iii) 15 ppm sulfur NRLM diesel fuel;

(iv) #1D 500 ppm sulfur motor vehicle diesel fuel;

(v) #2D 500 ppm sulfur motor vehicle diesel fuel;

(vi) 500 ppm sulfur NRLM diesel fuel;

(vii) NP 15 ppm sulfur motor vehicle diesel fuel;

(viii) NP 500 ppm sulfur motor vehicle diesel fuel; or,

(ix) Exempt distillate fuels such as fuels that are covered by a national security exemption under § 80.606, fuels that are used for purposes of research and development pursuant to § 80.607, and fuels used in the U.S. Territories pursuant to § 80.608 (including additional identifying information).

(2) Any refiner or importer shall maintain the records specified in paragraphs (a)(6) through (a)(10) of this section for each batch of distillate fuel that it transfers custody of and designates during the time period from June 1, 2007 through May 31, 2010 with the following categories:

(i) High sulfur NRLM diesel fuel; or

(ii) Heating oil.

(3) Any refiner or importer shall maintain the records specified in paragraphs (a)(6) through (a)(10) of this section for each batch of distillate fuel that it transfers custody of and designates during the time period from June 1, 2010 through May 31, 2012 with the following categories:

(i) 500 ppm sulfur NR diesel fuel;

(ii) 500 ppm sulfur LM diesel fuel;

(iii) Heating oil; or

(iv) Exempt distillate fuels such as fuels that are covered by a national security exemption under § 80.606, fuels that are used for purposes of research and development pursuant to § 80.607, and fuels used in the U.S. Territories pursuant to § 80.608 (including additional identifying information).

(4) Any refiner or importer shall maintain the records specified in paragraphs (a)(6) through (a)(10) of this section for each batch of distillate fuel

that it transfers custody of and designates during the time period from June 1, 2012 through May 31, 2014 with the following categories:

(i) 500 ppm sulfur NRLM diesel fuel;

(ii) Heating oil; or

(iii) Exempt distillate fuels such as fuels that are covered by a national security exemption under § 80.606, fuels that are used for purposes of research and development pursuant to § 80.607, and fuels used in the U.S. Territories pursuant to § 80.608 (including additional identifying information).

(5) Any refiner or importer shall maintain the records specified in paragraphs (a)(6) through (10) of this section for each batch of distillate or residual fuel that it transfers custody of and designates from June 1, 2014, and later as any of the following categories:

(i) Heating oil.

(ii) ECA marine fuel.

(6) The records for each batch with designations identified in paragraphs (a)(1) through (a)(5) of this section must clearly and accurately identify the batch number (including an indication as to whether the batch was received into the facility, produced by the facility, imported into the facility, or delivered from the facility), date and time of day (if multiple batches are delivered per day) that custody was transferred, the designation, the volume in gallons of the batch, and the name and the EPA entity and facility registration number of the facility to whom such batch was transferred.

(7) Any refiner or importer shall, for each of its facilities, maintain records that clearly and accurately identify the total volume in gallons of designated fuel identified in paragraphs (a)(1) through (a)(5) of this section transferred over each compliance period. The records shall be maintained separately for each fuel designated in paragraphs (a)(1) through (a)(5) of this section, and for each EPA entity and facility registration number to whom custody of the fuel was transferred.

(8) Notwithstanding the provisions of paragraphs (a)(6) and (a)(7) of this section, records of batches delivered of 500 ppm sulfur motor vehicle diesel fuel on which taxes have been paid per Section 4082 of the Internal Revenue Code (26 U.S.C. 4082) and of 500 ppm sulfur NRLM diesel fuel into which dye has been added per Section 4082 of the Internal Revenue Code (26 U.S.C. 4082), and of 500 ppm sulfur LM diesel fuel which has been properly marked pursuant to § 80.510(e) are not required to be maintained separately for each entity and facility to which the fuel was delivered.

(9) Notwithstanding the provisions of paragraphs (a)(6) and (a)(7) of this section, records of heating oil batches delivered that have been properly marked pursuant to § 80.510(d) through (f) and records of LM diesel fuel batches delivered that have been properly marked pursuant to § 80.510(e) are not required to be maintained separately for each entity and facility to which the fuel was delivered.

(10) Any refiner or importer shall maintain copies of all product transfer documents required under § 80.590. If all information required in paragraph (a)(6) of this section is on the product transfer document for a batch, then the provisions of this paragraph (a)(10) shall satisfy the requirements of paragraph (a)(6) of this section for that batch.

(11) Any refiner or importer shall maintain records related to annual compliance calculations performed under § 80.599 and to information required to be reported to the Administrator under § 80.601.

(12) Records must be maintained that demonstrate compliance with a refiner's compliance plan required under § 80.554, for distillate fuel designated as high sulfur NRLM diesel fuel and delivered from June 1, 2007 through May 31, 2010, for distillate fuel designated as 500 ppm sulfur NR diesel fuel and delivered from June 1, 2010, through May 31, 2012, and for distillate fuel designated as 500 ppm sulfur NRLM diesel fuel and delivered from June 1, 2012, through May 31, 2014, in the areas specified in § 80.510(g)(2).

(13) Refiners and importers who also receive fuel from another facility must also comply with the requirements of paragraph (b) of this section separately for those volumes.

(b) In addition to the requirements of § 80.592 and § 80.602, the following recordkeeping requirements shall apply to distributors:

(1) Any distributor shall maintain the records specified in paragraphs (b)(2) through (b)(10) of this section for each batch of distillate fuel with the following designations for which custody is received or delivered as well as any batches produced. Records shall be kept separately for each of its facilities.

(i) For each facility that receives or distributes #2D 15 ppm sulfur motor vehicle diesel fuel or #2D 500 ppm sulfur motor vehicle diesel fuel, records for each batch of diesel fuel with the following designations for which custody is received or delivered during the time period from June 1, 2006 through May 31, 2007:

(A) #1D 15 ppm sulfur motor vehicle diesel fuel;

(B) #2D 15 ppm sulfur motor vehicle diesel fuel;

(C) #1D 500 ppm sulfur motor vehicle diesel fuel;

(D) #2D 500 ppm sulfur motor vehicle diesel fuel;

(E) California diesel fuel as defined in § 80.616 which is transferred out of the State of California pursuant to the provisions of § 80.617(b);

(F) NP 15 ppm sulfur motor vehicle diesel fuel;

(G) NP 500 ppm sulfur motor vehicle diesel fuel; or

(H) Exempt distillate fuels such as fuels that are covered by a national security exemption under § 80.606, fuels that are used for purposes of research and development pursuant to § 80.607, and fuels used in the U.S. Territories pursuant to § 80.608 (including additional identifying information).

(ii) For each facility, records for each batch of diesel fuel with the following designations for which custody is received or delivered as well as any batches produced during the time period from June 1, 2007 through May 31, 2010:

(A) #1D 15 ppm sulfur motor vehicle diesel fuel;

(B) #2D 15 ppm sulfur motor vehicle diesel fuel;

(C) #1D 500 ppm sulfur motor vehicle diesel fuel;

(D) #2D 500 ppm sulfur motor vehicle diesel fuel;

(E) 500 ppm sulfur NRLM diesel fuel;

(F) 15 ppm sulfur NRLM diesel fuel;

(G) High sulfur NRLM diesel fuel;

(H) Heating oil;

(I) California diesel fuel as defined in § 80.616 which is transferred out of the State of California pursuant to the provisions of § 80.617(b);

(J) NP 15 ppm sulfur motor vehicle diesel fuel;

(K) NP 500 ppm sulfur motor vehicle diesel fuel; or

(L) Exempt distillate fuels such as fuels that are covered by a national security exemption under § 80.606, fuels that are used for purposes of research and development pursuant to § 80.607, and fuels used in the U.S. Territories pursuant to § 80.608 (including additional identifying information).

(iii) For each facility that receives unmarked fuel designated as NR diesel fuel, LM diesel fuel or heating oil, records for each batch of diesel fuel with the following designations for which custody is received or delivered as well as any batches produced during the time period from June 1, 2010 through May 31, 2012:

(A) 500 ppm sulfur NR diesel fuel;

(B) 500 ppm sulfur LM diesel fuel;

(C) Heating oil; or

(D) Exempt distillate fuels such as fuels that are covered by a national security exemption under § 80.606, fuels that are used for purposes of research and development pursuant to § 80.607, and fuels used in the U.S. Territories pursuant to § 80.608 (including additional identifying information).

(iv) For each facility that receives unmarked fuel designated as heating oil, records for each batch of diesel fuel with the following designations for which custody is received or delivered as well as any batches produced during the time period from June 1, 2012 through May 31, 2014:

(A) 500 ppm sulfur NRLM diesel fuel;

(B) Heating oil; or

(C) Exempt distillate fuels such as fuels that are covered by a national security exemption under § 80.606, fuels that are used for purposes of research and development pursuant to § 80.607, and fuels used in the U.S. Territories

pursuant to § 80.608 (including additional identifying information).

(v) For each facility that receives fuel designated as heating oil, records for each batch of distillate or residual fuel with any of the following designations for which custody is received or delivered as well as any batches produced from June 1, 2014, and beyond:

(A) 1,000 ppm sulfur ECA marine fuel.

(B) Heating oil.

(C) Exempt distillate fuels such as fuels that are covered by a national security exemption under § 80.606, fuels that are used for purposes of research and development pursuant to § 80.607, and fuels used in the U.S. Territories pursuant to § 80.608 (including additional identifying information).

(vi) From June 1, 2007 through May 31, 2010, for those facilities in the areas specified in § 80.510(g)(2) that receive unmarked fuel designated as high sulfur NRLM diesel fuel:

(A) High sulfur NRLM diesel fuel;

(B) Heating oil; or

(C) Exempt distillate fuels such as fuels that are covered by a national security exemption under § 80.606, fuels that are used for purposes of research and development pursuant to § 80.607, and fuels used in the U.S. Territories pursuant to § 80.608 (including additional identifying information).

(vii) From June 1, 2010 through May 31, 2012, for those facilities in the areas specified in § 80.510(g)(2) that receive unmarked fuel designated as 500 ppm sulfur NR diesel fuel, 500 ppm sulfur LM diesel fuel, or heating oil:

(A) 500 ppm sulfur NR diesel fuel;

(B) 500 ppm sulfur LM diesel fuel;

(C) Heating oil; or

(D) Exempt distillate fuels such as fuels that are covered by a national security exemption under § 80.606, fuels that are used for purposes of research and development pursuant to § 80.607, and fuels used in the U.S. Territories pursuant to § 80.608 (including additional identifying information).

(viii) From June 1, 2012 through May 31, 2014, for those facilities in the areas specified in § 80.510(g)(2) that receive unmarked fuel designated as 500 ppm sulfur NRLM diesel fuel or heating oil.

(A) 500 ppm sulfur NRLM diesel fuel;

(B) Heating oil; or

(C) Exempt distillate fuels such as fuels that are covered by a national security exemption under § 80.606, fuels that are used for purposes of research and development pursuant to § 80.607, and fuels used in the U.S. Territories pursuant to § 80.608 (including additional identifying information).

(2) Records that for each batch clearly and accurately identify the batch number (including an indication as to whether the batch was received into the facility, produced by the facility, imported into the facility, or delivered from the facility), date and time of day (if multiple batches are delivered per day) that custody was transferred, the designation, the volume in gallons of each batch of each fuel, and the name and the EPA entity and facility registration number of the facility to whom or from whom such batch was transferred.

(3) Records that clearly and accurately identify the total volume in gallons of each designated fuel identified under paragraph (b)(1) of this section transferred over each of the compliance periods, and over the periods from June 1, 2006 to the end of each compliance period. The records shall be maintained separately for each fuel designated under paragraph (b)(1) of this section, and for each EPA entity and facility registration number from whom the fuel was received or to whom it was delivered. For batches of fuel received from facilities without an EPA facility registration number:

(i) Any batches of fuel received marked pursuant to § 80.510(d) or (f) shall be deemed to be designated as heating oil.

(ii) Any batches of fuel received marked pursuant to § 80.510(e) shall be deemed to be designated as heating oil or LM diesel fuel.

(iii) Any batches of fuel received on which taxes have been paid pursuant to Section 4082 of the Internal Revenue Code (26 CFR 48.4082) shall be deemed to be designated as motor vehicle diesel fuel.

(iv) Any 500 ppm sulfur diesel fuel dyed pursuant to § 80.520(b) and not marked pursuant to § 80.510(d) or (f) shall be deemed to be designated as NRLM diesel fuel.

(v) Any diesel fuel with less than or equal to 500 ppm sulfur which is dyed pursuant to § 80.520(b) and not marked pursuant to § 80.510(e) shall be deemed to be NR diesel fuel.

(vi) Beginning June 1, 2014, any batches of fuel with greater than 15 ppm sulfur, but less than or equal to 1,000 ppm sulfur, and not designated as heating oil shall be deemed to be 1,000 ppm ECA marine fuel.

(4) Notwithstanding the provisions of paragraphs (b)(2) and (b)(3) of this section, for batches of 500 ppm sulfur motor vehicle diesel fuel delivered on which taxes have been paid per Section 4082 of the Internal Revenue Code (26 U.S.C. 4082) and 500 ppm sulfur NRLM diesel fuel into which red dye has been added per Section 4082 of the Internal Revenue Code (26 U.S.C. 4082), records are not required to be maintained separately for each entity or facility to whom fuel was delivered.

(5) Notwithstanding the provisions of paragraphs (b)(2) and (b)(3) of this section, for batches of heating oil delivered that are marked pursuant to § 80.510(d) through (f), records do not need to identify the EPA entity or facility registration number to which fuel was delivered.

(6) Notwithstanding the provisions of paragraphs (b)(2) and (b)(3) of this section, for batches of LM diesel fuel delivered that are marked pursuant to § 80.510(e), records do not need to identify the EPA entity or facility registration number to which fuel was delivered.

(7) Records that clearly and accurately reflect the beginning and ending inventory volume for each of the fuels for which records must be kept under paragraph (b)(1) of this section. Such records shall be maintained separately by each entity and facility consistent with the compliance periods defined in §§ 80.598 and 80.599.

(8) (i) If adjustments are made to inventory, the records must include detailed information related to the amount, type of, and reason for such adjustment.

(ii) If adjustments are made because of measurement error or variation, the records must include the adjustment made, the meter or gauge or other reading(s), and the name of the person who took such reading(s) and or applied the adjustment.

(9) For distributors that are required to keep records under paragraphs (b)(1) through (b)(8) of this section for truck loading terminals, records related to quarterly or annual compliance calculations, as applicable, performed under § 80.599 and to information required to be reported to the Administrator under § 80.601.

(10) For distributors that are required to keep records under paragraphs (b)(1) through (b)(8) of this section for facilities other than truck loading terminals, records related to annual compliance calculations performed under § 80.599 and to information required to be reported to the Administrator under § 80.601.

(c) Notwithstanding the provisions of paragraph (b) of this section, records of heating oil received are not required to be maintained for facilities that do not receive any heating oil which is unmarked pursuant to § 80.510(d) through (f), or LM diesel fuel which is unmarked pursuant to § 80.510(e).

(d) Notwithstanding the provisions of paragraph (b) of this section, records of 500 ppm sulfur MVNRLM diesel fuel received are not required to be maintained for facilities that do not receive any motor vehicle diesel fuel for which taxes have not already been paid pursuant to Section 4082 of the Internal Revenue Code (26 U.S.C. 4082) or NRLM diesel fuel which is undyed pursuant to § 80.520(b).

(e) The provisions of paragraphs (b)(1)(iii) and (iv) of this section do not apply to facilities located in the areas specified in § 80.510(g)(1) and (g)(2) unless they deliver marked heating oil or LM diesel fuel to areas outside the areas specified in § 80.510(g)(1) and (g)(2).

(f) Ultimate consumers that receive any batch of high sulfur NRLM diesel fuel beginning June 1, 2007 in areas listed in § 80.510(g)(2) must maintain records of each batch of fuel received for use in NRLM equipment pursuant to the compliance plan provisions of § 80.554, unless otherwise allowed by EPA.

(g) Ultimate consumers that receive any batch of 500 ppm sulfur NR diesel fuel beginning June 1, 2010 or NRLM

diesel fuel beginning June 1, 2012 in the areas listed in § 80.510(g)(2) must maintain records of each batch of fuel received for use in NR or NRLM equipment, as appropriate, pursuant to the compliance plan provisions of § 80.554, unless otherwise allowed by EPA.

(h) For purposes of this section, each portion of a shipment of designated distillate fuel under this section that is differently designated from any other portion, even if shipped as fungible product having the same sulfur content, shall be a separate batch.

(i) Additional records that must be kept by mobile facilities. Any registered mobile facility must keep records of all contracts from any contracted components (*e.g.*, tank truck, barge, marine tanker, rail car, *etc.*) in each of its registered mobile facilities.

(j) The records required in this section must be made available to the Administrator or the Administrator's designated representative upon request.

(k) Notwithstanding the provisions of this section, product transfer documents must be maintained under the provisions of §§ 80.590, 80.592, and 80.602.

(l) The records required in this section must be kept for five years after they are required to be collected.

(m) Identifications of fuel designations can be limited to a sub-designation that accurately identifies the fuel and do not need to also include the broader designation. For example, NR diesel fuel does not also need to be designated as NRLM or MVNRLM diesel fuel.

(n) Notwithstanding the provisions of paragraphs (b)(2) and (b)(3) of this section, for batches of 15 ppm sulfur motor vehicle diesel fuel or California diesel fuel under § 80.617(b) on which taxes have been paid per Section 4082 of the Internal Revenue Code (26 U.S.C. 4082), and 15 ppm sulfur NRLM diesel fuel or California diesel fuel under § 80.617(b) into which red dye has been added per Section 4082 of the Internal Revenue Code (26 U.S.C. 4082), records are not required to be maintained separately for each entity or facility to whom fuel was delivered.

(o) In addition to the requirements of §§ 80.592 and 80.602, the following recordkeeping requirements shall apply to aggregated facilities consisting of a refinery and truck loading terminal:

(1) Any aggregated facility consisting of a refinery and truck loading terminal shall maintain records of all the following information for each batch of distillate fuel (and/or residual fuel with a sulfur level of 1,000 ppm or less that is intended for use in an ECA) produced by the refinery and sent over the aggregated facility's truck loading terminal rack:

(i) The batch volume.

(ii) The batch number, assigned under the batch numbering procedures under §§ 80.65(d)(3) and 80.502(d)(1).

(iii) The date of production.

(iv) A record designating the batch as distillate or residual fuel meeting the 500 ppm, 15 ppm, or 1,000 ppm ECA marine sulfur standard.

(v) A record indicating the volumes that were either taxed, dyed, or dyed and marked.

(2) Volume reports for all distillate fuel (and/or residual fuel with a sulfur level of 1,000 ppm or less that is intended for use in an ECA) from external sources (*i.e.*, from another refiner or importer), as described in § 80.601(f)(2), sent over the aggregated facility's truck rack.

[69 FR 39196, June 29, 2004, as amended at 70 FR 40898, July 15, 2005; 70 FR 70511, Nov. 22, 2005; 71 FR 25721, May 1, 2006; 75 FR 22974, Apr. 30, 2010]

§ 80.601 What are the reporting requirements for purposes of the designate and track provisions?

(a) *Quarterly compliance period reports.* Beginning February 28, 2007 and continuing through August 31, 2010, each entity required to register under § 80.597 and to maintain records under § 80.600 must report the following information separately for each of its facilities to the Administrator as specified in paragraph (d)(1) of this section except as provided in paragraph (e) of this section.

(1) Separately for each fuel designation category specified in paragraphs (a)(1)(i) and (a)(1)(ii) of this section and separately for each transferee facility, the total volume in gallons of distillate fuel designated under § 80.598 for which custody was delivered by the reporting facility to any other entity or facility,

and the EPA entity and facility registration number(s), as applicable, of the transferee.

(i) Beginning with the first compliance period and continuing up to and including the compliance period that starts April 1, 2007, fuel designated as 15 ppm or 500 ppm motor vehicle diesel fuel, or California diesel fuel as defined in § 80.616 which is distributed outside the State of California pursuant to § 80.617(b).

(ii) Beginning with the compliance period that starts June 1, 2007 and continuing up to and including the final reporting period, all fuel designation categories.

(2) Separately for each designation category specified in paragraphs (a)(2)(i) and (a)(2)(ii) of this section and separately for each transferor facility, the total volume in gallons of distillate fuel designated under § 80.598 for which custody was received by the reporting facility, and the EPA entity and facility registration number(s), as applicable, of the transferor.

(i) Beginning with the first compliance period and continuing up to and including the compliance period that starts April 1, 2007, fuel designated as 15 ppm or 500 ppm motor vehicle diesel fuel, or California diesel fuel as defined in § 80.616 which is distributed outside the State of California pursuant to § 80.617(b).

(ii) Beginning with the compliance period that starts June 1, 2007 and continuing up to and including the final reporting period, all fuel designation categories.

(3) Any entity that receives custody of distillate fuel from another entity or facility that does not have an EPA facility identification number must report such batches as follows:

(i) Any batch of distillate fuel for which custody is received and which is marked pursuant to § 80.510(d) or (f) shall be deemed designated as heating oil, any batch of distillate fuel for which custody is received and which is marked pursuant to § 80.510(e) shall be deemed designated as heating oil or LM diesel fuel as applicable, and the report shall include that information under that designation.

(ii) Any batch of distillate fuel for which custody is received and for which taxes have been paid pursuant to Section 4082 of the Internal Revenue Code (26 U.S.C. 4082) shall be deemed designated as motor vehicle diesel fuel and the report shall include it under that designation.

(iii) Any batch of 500 ppm sulfur diesel fuel dyed pursuant to § 80.520(b) and not marked pursuant to § 80.510(d) and (f), and for which custody is received, shall be deemed designated as NRLM diesel fuel and the report shall include it under that designation.

(iv) Any batch of 500 ppm sulfur diesel fuel dyed pursuant to § 80.520(b) and not marked pursuant to § 80.510(e), and for which custody is received, shall be deemed designated as NR diesel fuel and the report shall include it under that designation.

(4) In the case of truck loading terminals, the results of all compliance calculations required under § 80.599, and including:

(i) The total volumes received of each fuel designation required to be reported in paragraphs (a)(1) through (a)(3) of this section over the quarterly compliance period.

(ii) The total volumes delivered of each fuel designation required to be reported in paragraphs (a)(1) through (a)(3) of this section over the quarterly compliance period.

(iii) The total volumes produced or imported at the facility of each fuel designation required to be reported in paragraphs (a)(1) through (a)(3) of this section over the quarterly compliance period.

(iv) Beginning and ending inventories of each fuel designation required to be reported in paragraphs (a)(1) through(a)(3) of this section over the quarterly compliance period.

(v) The volume balance under §§ 80.599(b)(4) and 80.598(b)(9)(vi).

(vi) Beginning with the compliance period starting June 1, 2007, the volume balance under §§ 80.599(c)(2) and 80.598(b)(9)(viii)(A).

(b) *Annual reports.* Beginning August 31, 2007, all entities required to register under § 80.597 and to maintain records for batches of fuel under § 80.600 must report the following information separately for each of its facilities to the Administrator on an annual basis, as

specified in paragraph (d)(2) of this section except as provided in paragraph (e) of this section.

(1) Separately for each designation category for which records are required to be kept under § 80.600 and separately for each transferor facility;

(i) The total volume in gallons of distillate fuel designated under § 80.598 for which custody was received by the reporting facility, and the EPA entity and facility registration number(s), as applicable, of the transferor; and

(ii) The total volume in gallons of distillate fuel designated under § 80.598 which was produced or imported by the reporting facility.

(2) Separately for each designation category for which records are required to be kept under § 80.600 and separately for each transferee facility, the total volume in gallons of distillate fuel designated under § 80.598 for which custody was delivered by the reporting facility to any other entity or facility, and the EPA entity and facility registration number(s), as applicable, of the transferee except as provided under § 80.600(a)(7), (a)(8), (b)(4), and (b)(5).

(3) The results of all compliance calculations required under § 80.599, and including:

(i) The total volumes in gallons received of each fuel designation required to be reported in paragraph (b)(1) of this section over the applicable annual compliance period.

(ii) The total volumes produced or imported at the facility of each fuel designation required to be reported in paragraph (b)(1) of this section over the quarterly compliance period.

(iii) The total volumes in gallons delivered of each fuel designation required to be reported in paragraph (b)(2) of this section over the applicable annual compliance period.

(iv) Beginning and ending inventories of each fuel designation required to be reported in paragraphs (b)(1) and (b)(2) of this section for the annual compliance period.

(v) In the areas specified in § 80.510(g)(2), for fuel designated as high sulfur NRLM diesel fuel delivered from June 1, 2007 through May 31, 2010, for fuel designated as 500 ppm NR diesel fuel delivered from June 1, 2010 through May 31, 2012, and for fuel designated as 500 ppm sulfur NRLM diesel fuel from June 1, 2012 through May 31, 2014, the refiner must report all information required under its compliance plan approved pursuant to § 80.554(a)(4) and (b)(4) and including the ultimate consumers to whom each batch of fuel was delivered and the total delivered to each ultimate consumer for the compliance period.

(vi) Ending with the report due August 31, 2010, the volume balance under §§ 80.598(b)(9)(vi) and 80.599(b)(4).

(vii) Ending with the report due August 31, 2010, the volume balance under §§ 80.598(b)(9)(vii) and 80.599(b)(5), if applicable.

(viii) Ending with the report due August 31, 2010, the volume balance under § 80.598(b)(9)(viii)(A) and § 80.599(c)(2).

(ix) Beginning with the report due August 31, 2010, the volume balance under § 80.598(b)(8)(viii)(B) and § 80.599(c)(4).

(x) Beginning with the report due August 31, 2011, and ending with the report due August 31, 2012, the volume balance under §§ 80.598(b)(9)(ix) and 80.599(d)(2).

(4) In the case of aggregated facilities consisting of a refinery and truck loading terminal, the results of annual compliance calculations under § 80.598 for any distillate fuel received from an external source on which taxes have not been assessed and is not dyed and/or marked that the refinery will be handing off to another party, rather than selling over the truck loading terminal rack.

(c) *Additional information*. The Administrator may request any additional information necessary to determine compliance with the requirements of §§ 80.598 and 80.599.

(d) *Submission of reports for quarterly and annual compliance periods*. (1) All quarterly reports shall be submitted to the Administrator for the compliance periods defined in § 80.599(a)(1) as follows:

(i) The reports for the first and second quarterly compliance periods covering June 1, 2006 to September 30, 2006 and October 1, 2006 to December 31, 2006 respectively shall be submitted by February 28, 2007.

(ii) The reports for the third and fourth quarterly compliance periods

covering January 1, 2007 to March 31, 2007 and April 1, 2007 to May 31, 2007 respectively shall be submitted by August 31, 2007.

(iii) The report for the fifth quarterly compliance period covering June 1, 2007 to September 30, 2007 shall be submitted by November 30, 2007.

(iv) The report for the sixth quarterly compliance period covering October 1, 2007 to December 31, 2007 shall be submitted by February 28, 2008.

(v) The reports for the quarterly compliance periods beginning with the first period in 2008 up to and including the first period in 2010 shall be submitted as follows:

(A) The report for the period covering January 1 to March 31 shall be submitted by the following May 31.

(B) The report covering the period covering April 1 to June 30 shall be submitted by the following August 31.

(C) The report for the period from July 1 to September 30 shall be submitted by the following November 30.

(D) The report for the quarterly compliance period from October 1 to December 31 shall be submitted by the following February 28.

(vi) The report for the quarterly compliance period from April 1, 2010 to May 31, 2010 shall be submitted by August 31, 2010.

(vii) The report for the last quarterly compliance period from June 1, 2010 to September 30, 2010 shall be submitted by November 30, 2010.

(2) All annual reports shall be submitted to the Administrator for the compliance periods defined in § 80.599(a)(2) by August 31.

(3) All reports shall be submitted on forms and following procedures specified by the Administrator, shall include a statement that volumes reported to the Administrator under this section are in substantial agreement to volumes reported to the Internal Revenue Service (and if these volumes are not in substantial agreement, an explanation must be included) and shall be signed and certified by a responsible corporate officer of the reporting entity.

(e) *Exclusions*. Notwithstanding the provisions of this section, an entity is not required to report under paragraphs (a) or (b) of this section for facilities whose only recordkeeping requirements under § 80.600 are under § 80.600 (f) or (g) or to maintain records solely related to calculating compliance with the downgrading limitation under §§ 80.527, 80.599(e) and 80.600(b)(1)(i) and (ii).

(f) *Additional requirements for aggregated facilities consisting of a refinery and a truck loading terminal*. In addition to the reporting requirements listed by paragraphs (a) through (e) of this section, as applicable, such aggregated facilities are also subject to the following requirements:

(1) *Batch reports*. Reports containing the requirements detailed in §§ 80.592(f) and 80.600(m), must be submitted for all distillate produced by the refinery and sent over the truck loading terminal rack.

(2) *Quarterly volume reports*. Reports detailing the quarterly totals of all designations, including whether the fuel was taxed or contained red dye (or red dye and the yellow marker), that left the truck loading terminal rack must be submitted for all distillate received from an external source or produced by the refinery.

(3) *Quarterly hand-off reports*. (i) Reports detailing the quarterly totals of all designations of fuel received from external refiner/importer sources, if any.

(ii) Reports detailing the quarterly totals of all undesignated fuel received from external refiner/importer sources that entered the designate and track system.

[69 FR 39198, June 29, 2004, as amended at 70 FR 40898, July 15, 2005; 70 FR 70512, Nov. 22, 2005; 71 FR 25722, May 1, 2006; 75 FR 22975, Apr. 30, 2010]

§ 80.602 What records must be kept by entities in the NRLM diesel fuel, ECA marine fuel, and diesel fuel additive production, importation, and distribution systems?

(a) *Records that must be kept by parties in the NRLM diesel fuel, ECA marine fuel and diesel fuel additive production, importation, and distribution systems*. Beginning June 1, 2007, or June 1, 2006, if that is the first period credits are generated under § 80.535, any person who produces, imports, sells, offers for sale, dispenses, distributes, supplies, offers

for supply, stores, or transports nonroad, locomotive or marine diesel fuel, or ECA marine fuel (beginning June 1, 2014) subject to the provisions of this subpart, must keep all the following records:

(1) The applicable product transfer documents required under §§ 80.590 and 80.591.

(2) For any sampling and testing for sulfur content for a batch of NRLM diesel fuel produced or imported and subject to the 15 ppm sulfur standard or any sampling and testing for sulfur content as part of a quality assurance testing program, and any sampling and testing for cetane index, aromatics content, marker solvent yellow 124 content or dye solvent red 164 content of NRLM diesel fuel, ECA marine fuel, NRLM diesel fuel additives or heating oil:

(i) The location, date, time and storage tank or truck identification for each sample collected;

(ii) The name and title of the person who collected the sample and the person who performed the testing; and

(iii) The results of the tests for sulfur content (including, where applicable, the test results with and without application of the adjustment factor under § 80.580(d)), for cetane index or aromatics content, dye solvent red 164, marker solvent yellow 124 (as applicable), and the volume of product in the storage tank or container from which the sample was taken.

(3) The actions the party has taken, if any, to stop the sale or distribution of any NRLM diesel fuel or ECA marine fuel found not to be in compliance with the sulfur standards specified in this subpart, and the actions the party has taken, if any, to identify the cause of any noncompliance and prevent future instances of noncompliance.

(b) *Additional records to be kept by refiners and importers of NRLM diesel fuel and ECA marine fuel.* Beginning June 1, 2007, or June 1, 2006, pursuant to the provisions of § 80.535 or § 80.554(d) (or June 1, 2014, pursuant to the provisions of § 80.510(k)), any refiner producing distillate or residual fuel subject to a sulfur standard under § 80.510, § 80.513, § 80.536, § 80.554, § 80.560, or § 80.561, for each of its refineries, and any importer importing such fuel separately for each facility, shall keep records that include the following information for each batch of NRLM diesel fuel, ECA marine fuel, or heating oil produced or imported:

(1) The batch volume.

(2) The batch number, assigned under the batch numbering procedures under § 80.65(d)(3).

(3) The date of production or import.

(4) A record designating the batch as one of the following:

(i) NRLM diesel fuel, NR diesel fuel, LM diesel fuel, ECA marine fuel, or heating oil, as applicable.

(ii) Meeting the 500 ppm sulfur standard of § 80.510(a), the 15 ppm sulfur standard of § 80.510(b) and (c), the 1,000 ppm sulfur standard of § 80.510(k), or other applicable standard.

(iii) Dyed or undyed with visible evidence of solvent red 164.

(iv) Marked or unmarked with solvent yellow 124.

(5) For foreign refiners and importers of their fuel, the designations and other records required to be kept under § 80.620.

(6) All of the following information regarding credits, kept separately for each compliance period, kept separately for each refinery and for each importer facility, kept separately if converted under § 80.535(a) and (b) or § 80.535(c) and (d), and kept separately from motor vehicle diesel fuel credits:

(i) The number of credits in the refiner's or importer's possession at the beginning of the calendar year.

(ii) The number of credits generated.

(iii) The number of credits used.

(iv) If any were obtained from or transferred to other parties, for each other party, its name, its EPA refiner or importer registration number consistent with § 80.597, and the number obtained from, or transferred to, the other party.

(v) The number in the refiner's or importer's possession that will carry over into the subsequent calendar year compliance period.

(vi) Commercial documents that establish each transfer of credits from the transferor to the transferee.

(7) The calculations used to determine baselines or compliance with the

volume requirements and volume percentages, as applicable, under this subpart.

(8) The calculations used to determine the number of credits generated.

(9) A copy of reports submitted to EPA under § 80.604.

(c) *Additional records importers must keep.* Any importer shall keep records that identify and verify the source of each batch of certified DFR-Diesel and non-certified DFR-Diesel imported and demonstrate compliance with the requirements under § 80.620.

(d) *Additional records that must be kept by mobile facilities.* Any registered mobile facility must keep records of all contracts from any contracted components (*e.g.* tank truck, barge, marine tanker, rail car, etc.) of each of its registered mobile facilities.

(e) *Length of time records must be kept.* The records required in this section shall be kept for five years from the date they were created, except that records relating to credit transfers shall be kept by the transferor for five years from the date the credits were transferred, and shall be kept by the transferee for five years from the date the credits were transferred, used or terminated, whichever is later.

(f) *Make records available to EPA.* On request by EPA, the records required in this section must be made available to the Administrator or the Administrator's representative. For records that are electronically generated or maintained, the equipment and software necessary to read the records shall be made available, or if requested by EPA, electronic records shall be converted to paper documents which shall be provided to the Administrator's authorized representative.

(g) *Additional records to be kept by aggregated facilities consisting of a refinery and a truck loading terminal.* In addition to the applicable records required by paragraphs (a) through (f) of this section, such aggregated facilities must also keep the following records:

(1) All the following information for each batch of distillate fuel (or residual fuel with a sulfur level of 1,000 ppm or less if such fuel is intended for use in an ECA) produced by the refinery and sent over the aggregated facility's truck rack:

(i) The batch volume.

(ii) The batch number, assigned under the batch numbering procedures under §§ 80.65(d)(3) and 80.502(d)(1).

(iii) The date of production.

(iv) A record designating the batch as one of the following:

(A) NRLM diesel fuel, NR diesel fuel, LM diesel fuel, ECA marine fuel, or heating oil, as applicable.

(B) Meeting the 500 ppm sulfur standard of § 80.510(a), the 15 ppm sulfur standard of § 80.510(b) and (c), the 1,000 ppm sulfur standard of § 80.510(k), or other applicable standard.

(C) Dyed or undyed with visible evidence of solvent red 164.

(D) Marked or unmarked with solvent yellow 124.

(2) Hand-off reports for all distillate fuel (or residual fuel with a sulfur level of 1,000 ppm or less if such fuel is intended for use in an ECA) from external sources (*i.e.*, from another refiner or importer), as described in § 80.601(f)(2).

[69 FR 39199, June 29, 2004, as amended at 70 FR 70513, Nov. 22, 2005; 71 FR 25723, May 1, 2006; 75 FR 22975, Apr. 30, 2010]

§ 80.603 What are the pre-compliance reporting requirements for NRLM diesel fuel?

(a) Except as provided in paragraph (c) of this section, beginning on June 1, 2005, and for each year until June 1, 2011, or until the entity produces or imports NR or NRLM diesel fuel meeting the 15 ppm sulfur standard of § 80.510(b) or (c), all refiners and importers planning to produce or import NR or NRLM diesel fuel, shall submit the following information to EPA:

(1) Any changes to the information submitted for the company registration;

(2) Any changes to the information submitted for any refinery or import facility registration;

(3) Any estimate of the average daily volumes (in gallons) of each sulfur grade of motor vehicle and NRLM diesel fuel produced (or imported) at each refinery (or import facility). These volume estimates must be provided both for fuel produced from crude oil, as well as any fuel produced from other sources, and must be provided for the

periods of June 1, 2010 through December 31, 2010, calendar years 2011 through 2013, January 1, 2014 through May 31, 2014, and June 1, 2014 through December 31, 2014;

(4) If expecting to participate in the credit trading program, estimates of the number of credits to be generated and/or used each year the program;

(5) Information on project schedule by quarter of known or projected completion date by the stage of the project, for example, following the five project phases described in EPA's June 2002 Highway Diesel Progress Review report (EPA420-R–02–016, *http://www.epa.gov/otaq/regs/hd2007/420r02016.pdf*): Strategic planning, Planning and front-end engineering, Detailed engineering and permitting, Procurement and construction, and Commissioning and startup;

(6) Basic information regarding the selected technology pathway for compliance (*e.g.*, conventional hydrotreating vs. other technologies, revamp vs. grassroots, etc.);

(7) Whether capital commitments have been made or are projected to be made; and

(8) The pre-compliance reports due in 2006 and later years must provide an update of the progress in each of these areas.

(b) Reports under this section may be submitted in conjunction with reports submitted under § 80.594.

(c) The pre-compliance reporting requirements of this section do not apply to refineries subject to the provisions of § 80.513.

[69 FR 39200, June 29, 2004]

§ 80.604 What are the annual reporting requirements for refiners and importers of NRLM diesel fuel?

Beginning with the annual compliance period that begins June 1, 2007, or the first period during which credits are generated, transferred or used, or the first period during which NRLM diesel fuel or heating oil is produced under a small refiner compliance option under this subpart, whichever is earlier, any refiner or importer who produces or imports NRLM diesel fuel must submit annual compliance reports for each refinery and importer facility that contain the following information required, and such other information as EPA may require.

(a) *All refiners and importers.* (1) The refiner or importer's company name and the EPA company and facility identification number.

(2) If the refiner is a small refiner, a statement regarding to which small refiner option it is subject.

(b) *Small refiners.* (1) For each refinery of small refiners subject to the provisions of § 80.551(g) and § 80.554(a) for each compliance period from June 1, 2007 through May 31, 2010, report the following:

(i) The total volume of diesel fuel produced and designated as NRLM diesel fuel.

(ii) The volume of diesel fuel produced and designated as NRLM diesel fuel having a sulfur content less than or equal to the 500 ppm sulfur standard under § 80.510(a).

(iii) The total volume of diesel fuel produced and designated as NRLM diesel fuel having a sulfur content greater than the 500 ppm sulfur standard under § 80.510(a).

(iv) The total volume of heating oil produced.

(v) The baseline under § 80.554(a)(1).

(vi) The total volume of diesel fuel produced and designated as NRLM diesel fuel that is exempt from the 500 ppm sulfur standard of § 80.510(a).

(vii) The total volume, if any, of NRLM diesel fuel subject to the 500 ppm sulfur standard § 80.510(a) that had a sulfur content exceeding 500 ppm.

(2) For each refinery of small refiners subject to the provisions of § 80.551(g) and § 80.554(b), for each compliance period between June 1, 2010 and May 31, 2012, report the following:

(i) The total volume of diesel fuel produced and designated as NR diesel fuel.

(ii) The total volume of diesel fuel produced and designated as LM diesel fuel.

(iii) The total volume of diesel fuel produced and designated as NR diesel fuel subject to the 500 ppm sulfur standard under § 80.510(a).

(iv) The total volume of diesel fuel produced and designated as LM diesel fuel subject to the 500 ppm sulfur standard under § 80.510(a).

(v) The volume of diesel fuel produced and designated as NR diesel fuel having a sulfur content of 15 ppm or less.

(vi) The baseline under § 80.554(b)(1).

(vii) The total volume of NRLM diesel fuel produced that is eligible for the sulfur standard under § 80.510(a).

(viii) The total volume, if any, of NRLM diesel fuel subject to the 15 ppm sulfur standard that had a sulfur content in excess of 15 ppm.

(3) For each refinery of small refiners subject to the provisions of § 80.551(g) and § 80.554(b), for each compliance period between June 1, 2012 and May 31, 2014, report the following:

(i) The total volume of diesel fuel produced and designated as NRLM diesel fuel.

(ii) The total volume diesel fuel produced and designated as NRLM diesel fuel subject to the 500 ppm sulfur standard under § 80.510(a).

(iii) The total volume of diesel fuel produced and designated as NRLM diesel fuel having a sulfur content less than or equal to the 15 ppm sulfur standard under § 80.510(c).

(iv) The baseline under § 80.554(b)(1).

(v) The total volume of NRLM diesel fuel produced that is eligible for the 500 ppm sulfur standard under § 80.510(a).

(vi) The total volume, if any, of NRLM diesel fuel subject to the 15 ppm sulfur standard that had a sulfur content in excess of 15 ppm.

(4) For each refinery of a small refiner that elects to produce NRLM diesel fuel subject to the 15 ppm sulfur standard of § 80.510(c) beginning June 1, 2006 under § 80.551(g) and § 80.554(d), for each compliance period report the following:

(i) The total volume of diesel fuel produced and designated as NRLM diesel fuel.

(ii) The total volume of diesel fuel produced and designated as NRLM diesel fuel having a sulfur content less than or equal to 15 ppm.

(iii) The percentages of NRLM diesel fuel produced and designated having a sulfur content less than or equal to 15 ppm under § 80.554(d)(1)(i) and (ii).

(iv) The deficit, if any, and the number of credits purchased, if any, to cover any deficit as provided in § 80.554(d)(3).

(v) A report of the small refiner's progress toward compliance with the gasoline standards under §§ 80.240 and 80.255.

(c) *Credit generation and use.* Information regarding the generation, use, transfer and retirement of credits, separately by refinery and import facility, including the following:

(1) The number of credits at the beginning of the compliance period.

(2) The number of credits generated.

(3) The number of credits used.

(4) If any credits were obtained from or transferred to other refineries or importers, for each other refinery or importer, the name, address, the EPA company identification number, and the number of credits obtained from or transferred to the other party.

(5) The number of credits retired.

(6) The credit balance at the beginning and end of the compliance period.

(d) *Batch reports.* For each batch of NRLM diesel fuel and heating oil (if applicable) produced or imported and delivered during the compliance periods under paragraph (b) of this section, include the following:

(1) The batch volume.

(2) The batch number assigned using the batch numbering conventions under § 80.65(d)(3) and the appropriate designation under § 80.598.

(3) The date of production or import.

(4) For each batch provide the information specified in paragraph (a)(1) of this section.

(5) [Reserved]

(6) Whether the batch was dyed with visible evidence of dye solvent red 164 before leaving the refinery or import facility or was undyed.

(7) Whether the batch was marked with marker solvent yellow 124 before leaving the refinery or import facility or was unmarked.

(e) *Additional reporting requirements for importers.* Importers of NRLM diesel fuel are subject to the following additional requirements:

(1) The reporting requirements under § 80.620, if applicable.

(2) Importers must exclude certified DFR-Diesel from calculations under this section.

(f) *Report submission.* Any report required by this section must be—

(1) On forms and following procedures specified by the Administrator of EPA;

(2) Signed and certified as meeting all the applicable requirements of this subpart by the owner or a responsible corporate officer of the refiner or importer; and

(3) Except for small refiners subject to § 80.554(d), submitted to EPA no later than August 31 each year for the prior annual compliance period. Small refiners subject to the provisions of § 80.554(d), reports must be submitted August 31 for the previous reporting period.

(4) With the exception of reports required under paragraph (b)(3) of this section, no reports will be required under this section after August 31, 2014.

[69 FR 39200, June 29, 2004, as amended at 70 FR 40899, July 15, 2005]

EXEMPTIONS

§ 80.605 [Reserved]

§ 80.606 What national security exemption applies to fuels covered under this subpart?

(a) The standards of all the fuels listed in paragraph (b) of this section do not apply to fuel that is produced, imported, sold, offered for sale, supplied, offered for supply, stored, dispensed, or transported for use in any of the following:

(1) Tactical military motor vehicles or tactical military nonroad engines, vehicles or equipment, including locomotive and marine, having an EPA national security exemption from the motor vehicle emission standards under 40 CFR 85.1708, or from the nonroad engine emission standards under 40 CFR part 89, 92, 94, 1042, or 1068.

(2) Tactical military motor vehicles or tactical military nonroad engines, vehicles or equipment, including locomotive and marine, that are not subject to a national security exemption from vehicle or engine emissions standards as described in paragraph (a)(1) of this section but, for national security purposes (for purposes of readiness for deployment oversees), need to be fueled on the same fuel as the vehicles, engines, or equipment for which EPA has granted such a national security exemption.

(b) The exempt fuel must meet any of the following:

(1) The motor vehicle diesel fuel standards of § 80.520(a)(1), (a)(2), and (c).

(2) The nonroad, locomotive, and marine diesel fuel standards of § 80.510(a), (b), and (c).

(3) The 1,000 ppm ECA marine fuel standards of § 80.510(k).

(c) The exempt fuel must meet all the following conditions:

(1) It must be accompanied by product transfer documents as required under § 80.590.

(2) It must be segregated from nonexempt MVNRLM diesel fuel and ECA marine fuel at all points in the distribution system.

(3) It must be dispensed from a fuel pump stand, fueling truck or tank that is labeled with the appropriate designation of the fuel, such as ''JP–5'' or ''JP–8''.

(4) It may not be used in any motor vehicles or nonroad engines, equipment or vehicles, including locomotive and marine, other than the vehicles, engines, and equipment referred to in paragraph (a) of this section.

[69 FR 39201, June 29, 2004, as amended at 75 FR 22975, Apr. 30, 2010]

§ 80.607 What are the requirements for obtaining an exemption for diesel fuel or ECA marine fuel used for research, development or testing purposes?

(a) *Written request for a research and development exemption.* Any person may receive an exemption from the provisions of this subpart for diesel fuel or ECA marine fuel used for research, development, or testing purposes by submitting the information listed in paragraph (c) of this section to: Director, Transportation and Regional Programs Division (6406J), U.S. Environmental Protection Agency, 1200 Pennsylvania Avenue, NW., Washington, DC 20460 (postal mail); or Director, Transportation and Regional Programs Division, U.S. Environmental Protection Agency, 1310 L Street, NW., 6th floor, Washington, DC 20005 (express mail/courier); and Director, Air Enforcement Division (2242A), U.S. Environmental Protection Agency, Ariel Rios

Building, 1200 Pennsylvania Avenue, NW., Washington, DC 20460.

(b) *Criteria for a research and development exemption.* For a research and development exemption to be granted, the person requesting an exemption must—

(1) Demonstrate a purpose that constitutes an appropriate basis for exemption;

(2) Demonstrate that an exemption is necessary;

(3) Design a research and development program to be reasonable in scope; and

(4) Exercise a degree of control consistent with the purpose of the program and EPA's monitoring requirements.

(c) *Information required to be submitted.* To demonstrate each of the elements in paragraphs (b)(1) through (4) of this section, the person requesting an exemption must include the following information in the written request required under paragraph (a) of this section:

(1) A concise statement of the purpose of the program demonstrating that the program has an appropriate research and development purpose.

(2) An explanation of why the stated purpose of the program cannot be achieved in a practicable manner without performing one or more of the prohibited acts under this subpart.

(3) To demonstrate the reasonableness of the scope of the program:

(i) An estimate of the program's duration in time and, if appropriate, mileage;

(ii) An estimate of the maximum number of vehicles or engines involved in the program;

(iii) The manner in which the information on vehicles and engines used in the program will be recorded and made available to the Administrator upon request; and

(iv) The quantity of fuel which does not comply with the requirements of §§ 80.520 and 80.521 for motor vehicle diesel fuel, or § 80.510 for NRLM diesel fuel or ECA marine fuel.

(4) With regard to control, a demonstration that the program affords EPA a monitoring capability, including all the following:

(i) The site(s) of the program (including facility name, street address, city, county, State, and zip code).

(ii) The manner in which information on vehicles and engines used in the program will be recorded and made available to the Administrator upon request.

(iii) The manner in which information on the fuel used in the program (including quantity, fuel properties, name, address, telephone number and contact person of the supplier, and the date received from the supplier), will be recorded and made available to the Administrator upon request.

(iv) The manner in which the party will ensure that the research and development fuel will be segregated from motor vehicle diesel fuel, NRLM diesel fuel, or ECA marine fuel, as applicable, and how fuel pumps will be labeled to ensure proper use of the research and development fuel.

(v) The name, address, telephone number and title of the person(s) in the organization requesting an exemption from whom further information on the application may be obtained.

(vi) The name, address, telephone number and title of the person(s) in the organization requesting an exemption who is responsible for recording and making available the information specified in this paragraph (c), and the location where such information will be maintained.

(d) *Additional requirements.* (1) The product transfer documents associated with research and development motor vehicle diesel fuel must comply with requirements of § 80.590(b)(3).

(2) The research and development fuel must be designated by the refiner or supplier, as applicable, as research and development fuel.

(3) The research and development fuel must be kept segregated from non-exempt MVNRLM diesel fuel and ECA marine fuel at all points in the distribution system.

(4) The research and development fuel must not be sold, distributed, offered for sale or distribution, dispensed, supplied, offered for supply, transported to or from, or stored by a fuel retail outlet, or by a wholesale purchaser-consumer facility, unless the wholesale purchaser-consumer facility

is associated with the research and development program that uses the fuel.

(5) At the completion of the program, any emission control systems or elements of design which are damaged or rendered inoperative shall be replaced on vehicles remaining in service, or the responsible person will be liable for a violation of the Clean Air Act section 203(a)(3) (42 U.S.C. 7522 (a)(3)) unless sufficient evidence is supplied that the emission controls or elements of design were not damaged.

(e) *Mechanism for granting of an exemption.* A request for a research and development exemption will be deemed approved by the earlier of 60 days from the date on which EPA receives the request for exemption, (provided that EPA has not notified the applicant of potential disapproval by that time), or the date on which the applicant receives a written approval letter from EPA.

(1) The volume of fuel subject to the approval shall not exceed the estimated amount under paragraph (c)(3)(iv) of this section, unless EPA grants a greater amount in writing.

(2) Any exemption granted under this section will expire at the completion of the test program or three years from the date of approval, whichever occurs first, and may only be extended upon re-application consistent will all requirements of this section.

(3) The passage of 60 days will not signify the acceptance by EPA of the validity of the information in the request for an exemption. EPA may elect at any time to review the information contained in the request, and where appropriate may notify the responsible person of disapproval of the exemption.

(4) In granting an exemption the Administrator may include terms and conditions, including replacement of emission control devices or elements of design, that the Administrator determines are necessary for monitoring the exemption and for assuring that the purposes of this subpart are met.

(5) Any violation of a term or condition of the exemption, or of any requirement of this section, will cause the exemption to be void *ab initio*.

(6) If any information required under paragraph (c) of this section should change after approval of the exemption, the responsible person must notify EPA in writing immediately. Failure to do so may result in disapproval of the exemption or may make it void *ab initio*, and may make the party liable for a violation of this subpart.

(f) *Effects of exemption.* Motor vehicle diesel fuel, NRLM diesel fuel, or ECA marine fuel that is subject to a research and development exemption under this section is exempt from other provisions of this subpart provided that the fuel is used in a manner that complies with the purpose of the program under paragraph (c) of this section and the requirements of this section.

(g) *Notification of completion.* The party shall notify EPA in writing within 30 days after completion of the research and development program.

[69 FR 39202, June 29, 2004, as amended at 75 FR 22976, Apr. 30, 2010]

§ 80.608 What requirements apply to diesel fuel and ECA marine fuel for use in the Territories?

The sulfur standards of § 80.520(a)(1) and (c) related to motor vehicle diesel fuel, of § 80.510(a), (b), and (c) related to NRLM diesel fuel, and of § 80.510(k) related to ECA marine fuel, do not apply to fuel that is produced, imported, sold, offered for sale, supplied, offered for supply, stored, dispensed, or transported for use in the Territories of Guam, American Samoa or the Commonwealth of the Northern Mariana Islands, provided that such diesel fuel is all the following:

(a) Designated by the refiner or importer as high sulfur diesel fuel only for use in Guam, American Samoa, or the Commonwealth of the Northern Mariana Islands.

(b) Used only in Guam, American Samoa, or the Commonwealth of the Northern Mariana Islands.

(c) Accompanied by documentation that complies with the product transfer document requirements of § 80.590(b)(1).

(d) Segregated from non-exempt MVNRLM diesel fuel and/or non-exempt ECA marine fuel at all points in the distribution system from the point the fuel is designated as exempt fuel only for use in Guam, American Samoa, or the Commonwealth of the Northern Mariana Islands, while the

exempt fuel is in the United States (or the United States Emission Control Area) but outside these Territories.

[75 FR 22976, Apr. 30, 2010]

§ 80.609 [Reserved]

VIOLATION PROVISIONS

§ 80.610 What acts are prohibited under the diesel fuel sulfur program?

No person shall—

(a) *Standard, dye, marker or product violation.* (1) Produce, import, sell, offer for sale, dispense, supply, offer for supply, store or transport motor vehicle diesel fuel, NRLM diesel fuel, ECA marine fuel or heating oil that does not comply with the applicable standards, dye, marking or any other product requirements under this subpart I and 40 CFR part 69, except as allowed by 40 CFR part 1043 for ECA marine fuel.

(2) Beginning June 1, 2007, produce, import, sell, offer for sale, dispense, supply, offer for supply, store or transport any diesel fuel for use in motor vehicle or nonroad engines that contains greater than 0.10 milligrams per liter of solvent yellow 124, except for 500 ppm sulfur diesel fuel sold, offered for sale, dispensed, supplied, offered for supply, stored, or transported for use in LM. from June 1, 2010 through November 30, 2012 for use only in locomotive or marine diesel engines that is marked under the provisions of § 80.510(e).

(3) Beginning June 1, 2007, produce, import, sell, offer for sale, dispense, supply, offer for supply, store or transport heating oil for use in any nonroad diesel engine, including any locomotive or marine diesel engine.

(b) *Designation and volume balance violation.* Produce, import, sell, offer for sale, dispense, supply, offer for supply, store or transport motor vehicle diesel, NRLM diesel fuel, ECA marine fuel, heating oil or other fuel that does not comply with the applicable designation or volume balance requirements under §§ 80.598 and 80.599.

(c) *Additive violation.* (1) Produce, import, sell, offer for sale, dispense, supply, offer for supply, store or transport any fuel additive for use at a downstream location that does not comply with the applicable requirements of § 80.521.

(2) Blend or permit the blending into motor vehicle diesel fuel, NRLM diesel fuel, or ECA marine fuel at a downstream location, or use, or permit the use, in motor vehicle diesel fuel, NRLM diesel fuel, or ECA marine fuel, of any additive that does not comply with the applicable requirements of § 80.521.

(d) *Used motor oil violation.* Introduce into the fuel system of a model year 2007 or later diesel motor vehicle or model year 2011 or later nonroad diesel engine (except for locomotive or marine engines) or other nonroad diesel engine certified for the use of 15 ppm sulfur content fuel, or permit the introduction into the fuel system of such vehicle or nonroad engine of used motor oil, or used motor oil blended with diesel fuel, that does not comply with the requirements of § 80.522.

(e) *Improper fuel usage violation.* (1) Introduce, or permit the introduction of, fuel into model year 2007 or later diesel motor vehicles, and beginning December 1, 2010 into any diesel motor vehicle, that does not comply with the standards and dye requirements of § 80.520(a) and (b);

(2) Introduce, or permit the introduction of, fuel into any nonroad diesel engine (including any locomotive or marine diesel engine) that does not comply with the applicable standards, dye and marking requirements of § 80.510(a), (d), and (e) and § 80.520(b) beginning on the following dates:

(i) This prohibition begins December 1, 2007 in the areas specified in § 80.510(g)(1) and (g)(2), except as specified in paragraph (e)(2)(ii) of this section.

(ii) This prohibition begins December 1, 2010 in the area specified in § 80.510(g)(2) for NRLM diesel fuel that is produced in accordance with a compliance plan approved under § 80.554.

(iii) This prohibition begins December 1, 2010 in all other areas.

(3) Introduce, or permit the introduction of, fuel into any nonroad diesel engine (other than locomotive and marine diesel engines) that does not comply with the applicable standards, dye and marking requirements of § 80.510(b) and (e) beginning on the following dates:

(i) This prohibition begins December 1, 2010 in the areas specified in § 80.510(g)(1) and (g)(2), except as specified paragraph (e)(3)(ii) of this section.

(ii) This prohibition begins December 1, 2014 in the area specified in § 80.510(g)(2) for NRLM diesel fuel that is produced in accordance with a compliance plan approved under § 80.554.

(iii) This prohibition begins December 1, 2014, in all other areas.

(4) Introduce, or permit the introduction of, fuel into any locomotive and marine diesel engine which does not comply with the applicable standards, dye and marking requirements of § 80.510(c) and § 80.510(f) in the following areas beginning on the following dates:

(i) This prohibition begins December 1, 2012 in the areas specified in § 80.510(g)(1) and (g)(2), except as specified in paragraph (e)(4)(ii) of this section.

(ii) This prohibition does not apply in the area specified in § 80.510(g)(2) for NRLM diesel fuel that is produced in accordance with a compliance plan approved under § 80.554.

(iii) This prohibition begins December 1, 2014, in all other areas.

(5) Introduce, or permit the introduction of, fuel into any model year 2011 or later nonroad diesel engine certified for use on 15 ppm sulfur content fuel, diesel fuel which does not comply with the applicable standards, dye and marking requirements of § 80.510(b) through (f).

(6) Beginning January 1, 2015, introduce (or permit the introduction of) any fuel with a sulfur content greater than 1,000 ppm for use in a Category 3 marine vessel within an ECA, except as allowed by 40 CFR part 1043. This prohibition is in addition to other prohibitions in this section.

(f) *Cause another party to violate.* Cause another person to commit an act in violation of paragraphs (a) through (e) of this section.

(g) *Cause violating fuel or additive to be in the distribution system.* Cause motor vehicle diesel fuel, NRLM diesel fuel, or ECA marine fuel to be in the diesel fuel distribution system which does not comply with the applicable standard, dye or marker requirements or the product segregation requirements of this subpart I, or cause any fuel additive to be in the fuel additive distribution system which does not comply with the applicable sulfur standards under § 80.521.

[69 FR 39203, June 29, 2004, as amended at 75 FR 22976, Apr. 30, 2010; 77 FR 61294, Oct. 9, 2012]

§ 80.611 What evidence may be used to determine compliance with the prohibitions and requirements of this subpart and liability for violations of this subpart?

(a) *Compliance with sulfur, cetane, and aromatics standards, dye and marker requirements.* Compliance with the standards, dye, and marker requirements in §§ 80.510, 80.511, 80.520, and 80.521 shall be determined based on the level of the applicable component or parameter, using the sampling methodologies specified in § 80.330(b), as applicable, and an approved testing methodology under the provisions of §§ 80.580 through 80.586 for sulfur; § 80.2(w) for cetane index; § 80.2(z) for aromatic content; and § 80.582 for fuel marker. Any evidence or information, including the exclusive use of such evidence or information, may be used to establish the level of the applicable component or parameter in the diesel fuel or additive, or motor oil to be used in diesel fuel, if the evidence or information is relevant to whether that level would have been in compliance with the standard if the regulatory sampling and testing methodology had been correctly performed. Such evidence may be obtained from any source or location and may include, but is not limited to, test results using methods other than the compliance methods in this paragraph (a), business records, and commercial documents.

(b) *Compliance with other requirements.* Determination of compliance with the requirements and prohibitions of this subpart other than the standards described in paragraph (a) of this section and in §§ 80.510, 80.511, 80.520, and 80.521, and determination of liability for any violation of this subpart, may be based on information obtained from any source or location. Such information may include, but is not limited to, business records and commercial documents.

[69 FR 39204, June 29, 2004]

§ 80.612 Who is liable for violations of this subpart?

(a) *Persons liable for violations of prohibited acts*—(1) *Standard, dye, marker, additives, used motor oil, heating oil, fuel introduction, and other product requirement violations.* (i) Any refiner, importer, distributor, reseller, carrier, retailer, wholesale purchaser-consumer who owned, leased, operated, controlled or supervised a facility where a violation of any provision of § 80.610(a) through (e) occurred, or any other person who violates any provision of § 80.610(a) through (e), is deemed liable for the applicable violation, except that distributors who receive diesel fuel or distillate from the point where it is taxed, dyed or marked, and retailers and wholesale purchaser-consumers are not deemed liable for any violation of § 80.610(b).

(ii) Any person who causes another person to violate § 80.610(a) through (e) is liable for a violation of § 80.610(f).

(iii) Any refiner, importer, distributor, reseller, carrier, retailer, or wholesale purchaser-consumer who produced, imported, sold, offered for sale, dispensed, supplied, offered to supply, stored, transported, or caused the transportation or storage of, diesel fuel or distillate that violates § 80.610(a), is deemed in violation of § 80.610(f).

(iv) Any person who produced, imported, sold, offered for sale, dispensed, supplied, offered to supply, stored, transported, or caused the transportation or storage of a diesel fuel additive which is used in motor vehicle diesel fuel or NRLM diesel fuel that is found to violate § 80.610(a), is deemed in violation of § 80.610(f).

(2) *Cause violating diesel fuel or additive to be in the distribution system.* Any refiner, importer, distributor, reseller, carrier, retailer, or wholesale purchaser-consumer or any other person who owned, leased, operated, controlled or supervised a facility from which distillate fuel or additive was released into the distribution system which does not comply with the applicable standards, marking or dye requirements of this Subpart I is deemed in violation of § 80.610(g).

(3) *Branded refiner/importer liability.* Any refiner or importer whose corporate, trade, or brand name, or whose marketing subsidiary's corporate, trade, or brand name appeared at a facility where a violation of § 80.610(a) or (b) occurred, is deemed in violation of § 80.610(a) or (b), as applicable.

(4) *Carrier causation.* In order for a distillate fuel or diesel fuel additive carrier to be liable under paragraph (a)(1)(ii), (a)(1)(iii), or (a)(1)(iv) of this section, as applicable, EPA must demonstrate, by reasonably specific showing by direct or circumstantial evidence, that the carrier caused the violation.

(5) *Parent corporation.* Any parent corporation is liable for any violations of this subpart that are committed by any subsidiary.

(6) *Joint venture.* Each partner to a joint venture is jointly and severally liable for any violation of this subpart that occurs at the joint venture facility or is committed by the joint venture operation.

(b) *Persons liable for failure to comply with other provisions of this subpart.* Any person who:

(1) Fails to comply with the requirements of a provision of this subpart not addressed in paragraph (a) of this section is liable for a violation of that provision; or

(2) Causes another person to fail to comply with the requirements of a provision of this subpart not addressed in paragraph (a) of this section, is liable for causing a violation of that provision.

[66 FR 5136, Jan. 18, 2001, as amended at 69 FR 39204, June 29, 2004; 75 FR 22977, Apr. 30, 2010]

§ 80.613 What defenses apply to persons deemed liable for a violation of a prohibited act under this subpart?

(a) *Presumptive liability defenses.* (1) Any person deemed liable for a violation of a prohibition under § 80.612(a)(1)(i), (a)(1)(iii), (a)(2), or (a)(3), will not be deemed in violation if the person demonstrates all of the following, as applicable:

(i) The violation was not caused by the person or the person's employee or agent;

(ii) Product transfer documents account for fuel or additive found to be in

violation and indicate that the violating product was in compliance with the applicable requirements when it was under the person's control;

(iii) The person conducted a quality assurance sampling and testing program, as described in paragraph (d) of this section, except for those persons subject to the provisions of paragraph (a)(1)(iv), (a)(1)(v), or (a)(1)(vi) of this section or § 80.614. A carrier may rely on the quality assurance program carried out by another party, including the party who owns the diesel fuel in question, provided that the quality assurance program is carried out properly. Retailers, wholesale purchaser-consumers, and ultimate consumers of diesel fuel are not required to conduct quality assurance programs;

(iv) For refiners and importers of diesel fuel subject to the 15 ppm sulfur standard under § 80.510(b) or (c) or § 80.520(a)(1), the 500 ppm sulfur standard under § 80.510(a) or § 80.520(c), and/or the 1,000 ppm sulfur standard under § 80.510(k), test results that—

(A) Were conducted according to an appropriate test methodology approved or designated under §§ 80.580 through 80.586, 80.2(w), or 80.2(z), as appropriate; and

(B) Establish that, when it left the party's control, the fuel did not violate the sulfur, cetane or aromatics standard, or the dye or marking provisions of §§ 80.510 or 80.511, as applicable;

(v) For any truck loading terminal or any other person who delivers heating oil for delivery to the ultimate consumer and is subject to the requirement to mark heating oil or LM diesel fuel under § 80.510(d) through (f), data which demonstrates that when it left the truck loading terminal or other facility, the concentration of marker solvent yellow 124 was equal to or greater than six milligrams per liter. In lieu of testing for marker solvent yellow 124 concentration, evidence may be presented of an oversight program, including records of marker inventory, purchase and additization, and records of periodic inspection and calibration of additization equipment that ensures that marker is added to heating oil or LM diesel fuel, as applicable, under § 80.510(d) through (f) in the required concentration;

(vi) Except as provided in § 80.614, for any person who, at a downstream location, blends a diesel fuel additive subject to the requirements of § 80.521(b) into motor vehicle diesel fuel or NRLM diesel fuel subject to the 15 ppm sulfur standard under § 80.520(a) or § 80.510(b) or (c), except a person who blends additives into fuel tanker trucks at a truck loading rack subject to the provisions of paragraph (d)(2) of this section, test results which are conducted subsequent to the blending of the additive into the fuel, and which comply with the requirements of paragraphs (a)(1)(iv)(A) and (B) of this section; and

(vii) Any person deemed liable for a designation or volume balance provisions violation under § 80.610(b) and 80.612(a) will not be deemed in violation if the person demonstrates, through product transfer documents, records, reports and other evidence that the diesel fuel or distillate was properly designated and volume balance requirements were met.

(2) Any person deemed liable for a violation under § 80.612(a)(1)(iv), in regard to a diesel fuel additive subject to the requirements of § 80.521(a), will not be deemed in violation if the person demonstrates that—

(i) Product transfer document(s) account for the additive in the fuel found to be in violation, which comply with the requirements under § 80.591(a), and indicate that the additive was in compliance with the applicable requirements while it was under the party's control; and

(ii) For the additive's manufacturer or importer, test results which accurately establish that, when it left the party's control, the additive in the diesel fuel determined to be in violation did not have a sulfur content greater than or equal to 15 ppm.

(A) Analysis of the additive sulfur content pursuant to this paragraph (a)(2) may be conducted at the time the batch was manufactured or imported, or on a sample of that batch which the manufacturer or importer retains for such purpose for a minimum of two years from the date the batch was manufactured or imported.

(B) After two years from the date the additive batch was manufactured or imported, the additive manufacturer or

importer is no longer required to retain samples for the purpose of complying with the testing requirements of this paragraph (a)(2).

(C) The analysis of the sulfur content of the additive must be conducted pursuant to the requirements of § 80.580.

(3) Any person who is deemed liable for a violation under § 80.612(a)(1)(iv) with regard to a diesel fuel additive subject to the requirements of § 80.521(b), will not be deemed in violation if the person demonstrates that—

(i) The violation was not caused by the party or the party's employee or agent;

(ii) Product transfer document(s) which comply with the additive information requirements under § 80.591(b), account for the additive in the fuel found to be in violation, and indicate that the additive was in compliance with the applicable requirements while it was under the party's control; and

(iii) For the additive's manufacturer or importer, test results which accurately establish that, when it left the party's control, the additive in the diesel fuel determined to be in violation was in conformity with the information on the additive product transfer document pursuant to the requirements of § 80.591(b). The testing procedures applicable under paragraph (a)(2) of this section, also apply under this paragraph (a)(3).

(b) *Branded refiner defenses.* In the case of a violation found at a facility operating under the corporate, trade or brand name of a refiner or importer, or a refiner's or importer's marketing subsidiary, the refiner or importer must show, in addition to the defense elements required under paragraph (a)(1) of this section, that the violation was caused by:

(1) An act in violation of law (other than the Clean Air Act or this Part 80), or an act of sabotage or vandalism;

(2) The action of any refiner, importer, retailer, distributor, reseller, oxygenate blender, carrier, retailer or wholesale purchaser-consumer in violation of a contractual agreement between the branded refiner or importer and the person designed to prevent such action, and despite periodic sampling and testing by the branded refiner or importer to ensure compliance with such contractual obligation; or

(3) The action of any carrier or other distributor not subject to a contract with the refiner or importer, but engaged for transportation of diesel fuel, despite specifications or inspections of procedures and equipment which are reasonably calculated to prevent such action.

(c) *Causation demonstration.* Under paragraph (a)(1) of this section for any person to show that a violation was not caused by that person, or under paragraph (b) of this section to show that a violation was caused by any of the specified actions, the person must demonstrate by reasonably specific showing, by direct or circumstantial evidence, that the violation was caused or must have been caused by another person and that the person asserting the defense did not contribute to that other person's causation.

(d) *Quality assurance and testing program.* To demonstrate an acceptable quality assurance program under paragraph (a)(1)(iii) of this section, a person must present evidence of the following:

(1) A periodic sampling and testing program to ensure the diesel fuel or additive the person sold, dispensed, supplied, stored, or transported, meets the applicable standards and requirements, including the requirements relating to the presence of marker solvent yellow 124.

(2) For those parties who, at a downstream location, blend diesel fuel additives subject to the requirements of § 80.521(b) into fuel trucks at a truck loading rack, the periodic sampling and testing program required under this paragraph (d) must ensure, by taking into account the greater risk of noncompliance created through use of a high sulfur additive, that the diesel fuel into which the additive was blended meets the applicable standards subsequent to the blending.

(3) On each occasion when diesel fuel or additive is found not in compliance with the applicable standard:

(i) The person immediately ceases selling, offering for sale, dispensing, supplying, offering for supply, storing or transporting the non-complying product.

(ii) The person promptly remedies the violation and the factors that caused the violation (for example, by removing the non-complying product from the distribution system until the applicable standard is achieved and taking steps to prevent future violations of a similar nature from occurring).

(4) For any carrier who transports diesel fuel or additive in a tank truck, the quality assurance program required under this paragraph (d) need not include its own periodic sampling and testing of the diesel fuel or additive in the tank truck, but in lieu of such tank truck sampling and testing, the carrier shall demonstrate evidence of an oversight program for monitoring compliance with the requirements of this subpart relating to the transport or storage of such product by tank truck, such as appropriate guidance to drivers regarding compliance with the applicable sulfur standard, product segregation and product transfer document requirements, and the periodic review of records received in the ordinary course of business concerning diesel fuel or additive quality and delivery.

(e) *Alternative defense requirements.* A person deemed liable under § 80.612(a) for a violation of § 80.610(a)(1), concerning diesel fuel that is sold, offered for sale, or dispensed at a retail outlet and that does not meet the applicable sulfur content standard under § 80.520(a)(1), as adjusted under § 80.580(d), may comply with the following alternative defense requirements in lieu of the requirements in paragraphs (a) through (d) of this section to the extent provided for, and subject to the conditions and limitations set forth in this paragraph (e):

(1) *Independent survey association.* To comply with the alternative defense requirements under this paragraph (e), a person must participate in the funding of a consortium which arranges to have an independent survey association conduct a statistically valid program of annual compliance surveys pursuant to a survey plan which has been approved by EPA, in accordance with the requirements of paragraphs (e)(2) through (e)(4) of this section.

(2) *General requirements.* The consortium survey program under this paragraph (e) must be:

(i) Planned and conducted by an independent survey association that meets the requirements in § 80.68(c)(13)(i);

(ii) Conducted at diesel fuel retail outlets nationwide; and

(iii) Representative of all motor vehicle diesel fuel subject to the 15 ppm sulfur standard under § 80.520(a)(1) dispensed at diesel fuel retail outlets nationwide.

(3) *Independent survey association requirements.* The consortium described in paragraph (e)(1) of this section shall require the independent survey association conducting the surveys to:

(i) Submit to EPA for approval each calendar year a proposed survey plan in accordance with the requirements of paragraph (e)(4) of this section.

(ii) Obtain samples of motor vehicle diesel fuel subject to the 15 ppm sulfur standard under § 80.520(a)(1) in accordance with the survey plan approved under this paragraph (e), or immediately notify EPA of any refusal of retail outlets to allow samples to be taken;

(iii) Test, or arrange to be tested, the samples required under paragraph (e)(3)(ii) of this section for sulfur content as follows—

(A) Samples collected at retail outlets shall be shipped the same day the samples are collected via overnight service to the laboratory, and analyzed for sulfur content within twenty-four hours after receipt of the sample in the laboratory.

(B) Any laboratory to be used by the independent survey association for sulfur testing shall be approved by EPA and its sulfur test method shall comply with the provisions of §§ 80.584, 80.585 and 80.586.

(C) For purposes of the alternative defense requirements in this paragraph (e), test results shall be rounded to a whole number using ASTM E 29–02$^{\epsilon 1}$, Standard Practice for Using Significant Digits in Test Data to Determine Conformance with Specifications, rounding method procedures. The Director of the Federal Register approved the incorporation by reference of ASTM E 29–02$^{\epsilon 1}$ as prescribed in 5 U.S.C. 552(a) and 1 CFR part 51. Anyone

may purchase copies of this standard from ASTM International, 100 Barr Harbor Dr., West Conshohocken, PA 19428, (610) 832–9585. Anyone may inspect copies at the U.S. EPA, EPA Docket Center, Room 3334, EPA West Building, 1301 Constitution Ave., NW., Washington, DC 20460, (202) 566–9744, or at the National Archives and Records Administration (NARA). For information on the availability of this material at NARA, call 202–741–6030, or go to: *http://www.archives.gov/federal-register/cfr/ibr-locations.html*.

(iv) Provide notice of samples with sulfur content greater than the 15 ppm standard under § 80.520(a)(1), as adjusted under § 80.580(d), as follows:

(A) In the case of any test result that is one or two ppm greater than the 15 ppm standard under § 80.520(a)(1), as adjusted under § 80.580(d), the independent survey association shall, within twenty-four hours after the laboratory receives the sample, send notification of the test result as follows: In the case of a sample collected at a retail outlet at which the brand name of a refiner or importer is displayed, to the refiner or importer, and EPA; and in the case of a sample collected at other retail outlets, to the retailer and EPA. This initial notification to a refiner shall include specific information concerning the name and address of the retail outlet, contact information, the brand, and the sulfur content of the sample.

(B) In the case of any test result that is three or more ppm greater than the 15 ppm standard under § 80.520(a)(1), as adjusted under § 80.580(d), or for a test result that is one or two ppm greater than the 15 ppm standard under § 80.520(a)(1), as adjusted under § 80.580(d), and the retail outlet has had an exceedance within the previous two years, the independent survey association shall, within the time limits specified in paragraph (e)(3)(iv)(A) of this section, provide notice to the parties described in paragraph (e)(3)(iv)(A) of this section. The notice to EPA must include the name and address of the retail outlet, and the telephone number, if known.

(C) The independent survey association shall provide notice to the identified contact person or persons for each party specified in paragraphs (e)(3)(iv)(A) and (B) of this section in writing (*e.g.* e-mail or facsimile) and, if requested by the identified contact person, by telephone.

(v) Provide to EPA quarterly and annual summary survey reports which include the information specified in paragraph (e)(8) of this section.

(vi) Maintain all records relating to the surveys conducted under this paragraph (e) for a period of at least 5 years.

(vii) At any time permit any representative of EPA to monitor the conduct of the surveys, including sample collection, transportation, storage, and analysis.

(4) *Survey plan design requirements.* The proposed survey plan required under paragraph (e)(3)(i) of this section shall, at a minimum, include the following:

(i) *Number of surveys.* The survey plan shall include four surveys each calendar year. The four surveys collectively are called the survey series.

(ii) *Sampling areas.* The survey plan shall include sampling in three types of areas, called sampling strata, during each survey: Densely populated areas, transportation corridors and rural areas. These sampling strata shall be further divided into discrete sampling areas, or clusters. Each survey shall include sampling in at least 40 sampling areas in each stratum, randomly selected.

(iii) *No advance notice of surveys.* The survey plan shall include procedures to keep confidential from any regulated party, but not from EPA, the identification of the sampling areas that are included in any survey plan prior to the beginning of a survey in an area.

(iv) *Retail outlet selection.*

(A) The retail outlets to be sampled in a sampling area shall be selected from among all retail outlets in the sampling area that sell motor vehicle diesel fuel subject to the 15 ppm sulfur standard under § 80.520(a)(1), with probability of selection proportionate to the volume of motor vehicle diesel fuel subject to the 15 ppm sulfur standard under § 80.520(a)(1) sold at the retail outlets, and inclusion of retail outlets with different brand names and unbranded, if possible.

(B) In the case of any retail outlet from which a sample of motor vehicle diesel fuel subject to the 15 ppm sulfur standard under § 80.520(a)(1) was collected during a survey and determined to have a sulfur content that exceeds the 15 ppm sulfur standard under § 80.520(a)(1), as adjusted under § 80.580(d), that retail outlet shall be included in the subsequent survey.

(C) Only a single sample shall be collected at each retail outlet, except that where a retail outlet had a sample from the preceding survey with a test result that exceeds the 15 ppm standard under § 80.520(a)(1), as adjusted under § 80.580(d), separate samples shall be taken that represent the diesel fuel contained in each storage tank containing motor vehicle diesel fuel subject to the 15 ppm sulfur standard under § 80.520(a)(1), unless collection of separate samples is not practicable (for example, due to diesel piping arrangements or pump outages).

(v) *Number of samples.*

(A) The minimum number of samples to be included in the survey plan for each calendar year shall be calculated as follows:

$$n = \left\{ \left[\left(Z_\alpha + Z_\beta \right) \right]^2 \Big/ \left(4 * \left[arc\ \sin\left(\sqrt{\phi_1} \right) - arc\ \sin\left(\sqrt{\phi_0} \right) \right]^2 \right) \right\} * St_n * F_a * F_b * Su_n$$

Where:

n = minimum number of samples in a year-long survey series. However, in no case shall n be larger than 9,600 or smaller than 5,250.

Z_α = upper percentile point from the normal distribution to achieve a one-tailed 95% confidence level (5% α-level). Thus, Z_α equals 1.645.

Z_β = upper percentile point to achieve 95% power. Thus, Z_β equals 1.645.

φ_1 = the maximum proportion of stations selling non-compliant fuel for the fuel in a region to be deemed compliant. In this test, the parameter needs to be 5% or greater, i.e., 5% or more of the stations, within a stratum such that the region is considered non-compliant. For this survey, φ_1 will be 5%.

φ_o = the underlying proportion of non-compliant stations in a sample. For calendar year 2011, $\varphi_o$will be 1.9%. For calendar years 2012 and beyond, φ_o will be the average of the proportion of stations to be non-compliant over the previous four surveys.

St_n = number of sampling strata. For purposes of this survey program, St_n equals 3.

F_a = adjustment factor for the number of extra samples required to compensate for collected samples that cannot be included in the survey, based on the number of additional samples required during the previous four surveys. However, in no case shall the value of F_a be smaller than 1.1. For purposes of this adjustment factor, a sample shall be treated as one that can be included in the survey only if the fuel was offered for sale as motor vehicle diesel fuel subject to the 15 ppm sulfur standard under § 80.520(a)(1) at the retail outlet where the sample was collected and if an appropriate laboratory analysis of this fuel is conducted.

F_b = adjustment factor for the number of samples required to resample each retail outlet with test results greater than 17 ppm (resampling), based on the rate of resampling required during the previous four surveys. However, in no case shall the value of F_b be smaller than 1.1.

Su_n = number of surveys per year. For purposes of this survey program, Su_n equals 4.

(B) The number of samples obtained from the formula in paragraph (e)(4)(v)(A) of this section, after being incremented as necessary to allocate whole numbers of samples to each cluster, shall be distributed approximately equally for the surveys conducted during the calendar year. Within a survey, the samples shall be divided approximately equally for the three strata.

(5) *Sulfur test result that is one or two ppm Greater than the 15 ppm standard under § 80.520(a)(1), as adjusted under § 80.580(d).* The following provisions apply if the tested sulfur level of a diesel fuel sample collected by the independent survey association is one or two ppm greater than the 15 ppm standard under § 80.520(a)(1), as adjusted under § 80.580(d).

(i) *Branded refiner or importer.* Where the sample was collected at a retail outlet at which the brand name of a refiner or importer is displayed, the

branded refiner or importer will be deemed to have established its defense under this section, provided that the refiner or importer participates in a consortium as described in paragraph (e)(1) of this section, and provided that the refiner or importer also demonstrates the following:

(A) The sulfur content of the diesel fuel at the terminal(s) that most recently supplied the retail outlet was no greater than 15 ppm prior to adjustment under § 80.580(d) when dispensed for delivery to the retail outlet;

(B) Best efforts and accepted business practices are used by parties downstream from the refiner or importer to avoid diesel fuel contamination. These would include, for example, procedures for ensuring motor vehicle diesel fuel subject to the 15 ppm sulfur standard under § 80.520(a)(1) is not contaminated in delivery trucks, and procedures for ensuring delivery truck drivers can identify retail outlet drop points for motor vehicle diesel fuel subject to the 15 ppm sulfur standard under § 80.520(a)(1).

(C) Upon receiving the notification required under paragraph (e)(3)(iv)(A) of this section, any pumps supplied by the retail storage tank where the noncompliant diesel fuel was found were shutdown until such time that the fuel at issue was retested and the sulfur content of the fuel was found to be no greater than the 15 ppm standard under § 80.520(a)(1), as adjusted under § 80.580(d). Prior to May 31, 2010, as an alternative to shutting down pumps supplied by the retail storage tank where the noncompliant diesel fuel was found, such pumps may be relabeled with the language required under § 80.571(b). The steps required in this paragraph (e)(5)(i)(C) must be taken as soon as practicable after receiving the notification required under paragraph (e)(3)(iv)(A) of this section, which normally will be within the same business day, but no longer than twenty-four hours after notification is received unless the refiner or importer demonstrates this timing is not possible.

(D) A root cause analysis is performed to determine the cause of the noncompliant diesel fuel and appropriate actions are taken to prevent future violations.

(E) The independent survey association samples and retests the diesel fuel at the retail outlet during its next survey, in addition to the scheduled sampling and testing under the approved survey program.

(F) The refiner or importer submits a report to EPA no later than 120 days following the date the sample was collected at the retail outlet, which includes the information specified in paragraph (e)(7) of this section.

(G) The refiner or importer supplies EPA with copies of the contracts with downstream parties specified in § 80.613(b)(2) or the specifications or inspections of procedures and equipment described in § 80.613(b)(3), as appropriate, which are designed to prevent the contamination of motor vehicle diesel fuel subject to the 15 ppm sulfur standard under § 80.520(a)(1).

(ii) *Unbranded refiner or importer*. Any unbranded refiner or importer that is deemed liable under § 80.612(a) for a violation of § 80.610(a)(1), concerning diesel fuel that is sold, offered for sale, or dispensed at a retail outlet and that does not meet the applicable sulfur content standard under § 80.520(a)(1), as adjusted under § 80.580(d), will be deemed to have established its defense under this section if the unbranded refiner or importer is a member of the consortium described in paragraph (e)(1) of this section and the refiner or importer meets the requirements of paragraphs (e)(5)(i)(A) through (F) of this section.

(iii) *Distributor or retailer*. Any distributor (*e.g.*, pipeline, terminal operator, marketer, truck carrier) or retailer that is deemed liable under § 80.612(a) for a violation of § 80.610(a)(1), concerning diesel fuel that is sold, offered for sale, or dispensed at a retail outlet and that does not meet the applicable sulfur content standard under § 80.520(a)(1), as adjusted under § 80.580(d), will be deemed to have established its defense under this section, provided that, within two years prior to the time the diesel fuel sample was collected by the independent survey association, the retail outlet had no instances where the tested sulfur level of a diesel fuel sample was greater than the 15 ppm standard under § 80.520(a)(1), as adjusted under § 80.580(d); and

(A) Where the retailer displays the brand name of a refiner or importer, the requirements in paragraphs (e)(5)(i) of this section are met by the branded refiner or importer; or

(B) Where the branded refiner or importer has elected not to participate in a consortium as described in paragraph (e)(1) of this section, or where the retailer does not display the brand name of a refiner or importer, the distributor or retailer is a member of the consortium described in paragraph (e)(1) of this section and the distributor or retailer meets the requirements in paragraphs (e)(5)(i)(A) through (F) of this section.

(C) If within two years prior to the time the diesel fuel sample was collected by the independent survey association, the retail outlet had an instance where the tested sulfur level of a diesel fuel sample was greater than the 15 ppm standard under § 80.520(a)(1), as adjusted under § 80.580(d), any distributor or retailer that is deemed liable for a violation under § 80.612 will be deemed to have established its defense under this section if the party meets the requirements under paragraph (e)(5)(iii)(A) or (B) of this section (in lieu of the requirement in paragraph (a)(1)(iii) of this section), and the party meets the requirements under paragraphs (a)(1)(i), (a)(1)(ii), and (c) of this section.

(6) *Sulfur test result that is three or more ppm Greater than the 15 ppm standard under § 80.520(a)(1), as adjusted under § 80.580(d).* The following provisions apply if the tested sulfur level of a diesel fuel sample collected by the independent survey association is three or more ppm greater than the 15 ppm standard under § 80.520(a)(1), as adjusted under § 80.580(d):

(i) *Branded refiner or importer.* Any branded refiner or importer that is deemed liable under § 80.612(a) for a violation of § 80.610(a)(1), concerning diesel fuel that is sold, offered for sale, or dispensed at a retail outlet and that does not meet the applicable sulfur content standard under § 80.520(a)(1), as adjusted under § 80.580(d), will be deemed to have established its defense under this section if the refiner or importer meets the requirements under paragraph (e)(5)(i) of this section and meets the requirements under paragraphs (a)(1)(i), (a)(1)(ii), (b)(1), (b)(2), (b)(3), and (c) of this section.

(ii) *Unbranded refiner or importer.* Any unbranded refiner or importer that is deemed liable under § 80.612(a) for a violation of § 80.610(a)(1), concerning diesel fuel that is sold, offered for sale, or dispensed at a retail outlet and that does not meet the applicable sulfur content standard under § 80.520(a)(1), as adjusted under § 80.580(d), will be deemed to have established its defense under this section if the refiner or importer meets the requirements under paragraph (e)(5)(ii) of this section and meets the requirements under paragraphs (a)(1)(i), (a)(1)(ii), (a)(1)(iv), and (c) of this section.

(iii) *Distributor or retailer.* Any distributor or retailer that is deemed liable under § 80.612(a) for a violation of § 80.610(a)(1), concerning diesel fuel that is sold, offered for sale, or dispensed at a retail outlet and that does not meet the applicable sulfur content standard under § 80.520(a)(1), as adjusted under § 80.580(d), will be deemed to have established its defense under this section if the requirements under paragraph (e)(5)(iii)(A) or (B) of this section, as appropriate, are met, and the distributor or retailer meets the requirements under paragraphs (a)(1)(i), (a)(1)(ii), and (c) of this section. Distributors that blend a diesel fuel additive subject to the requirements of § 80.521(b) into motor vehicle diesel fuel subject to the 15 ppm sulfur standard under § 80.520(a) must also meet the requirement under paragraph (a)(1)(iv) of this section.

(7) *Report regarding motor vehicle diesel fuel subject to the 15 ppm sulfur standard under § 80.520(a)(1) with high sulfur content.* The report that is required to be submitted to EPA under paragraph (e)(5)(i)(F) of this section shall contain the following information:

(i) The name, address and contact information for the regulated party submitting the report;

(ii) The name, address and contact information for the retail outlet where the high sulfur diesel fuel was found;

(iii) The brand name of the refiner or importer displayed at the retail outlet, if any;

(iv) The date of sampling, the analysis results, and the label that appeared on the pump where the sample was collected.

(v) For each of the most recent three deliveries (*i.e.*, the three deliveries that immediately preceded the taking of the violating sample) of diesel fuel to the retail outlet storage tank at issue, or the most recent five deliveries if the cause of the violation is not demonstrated following analysis of the most recent three deliveries:

(A) A copy of the product transfer documents for the delivery;

(B) The name, address and contact information for the terminal and truck distributor that supplied the diesel fuel;

(C) The date of delivery and the volume of diesel fuel delivered;

(D) The designation of the diesel fuel on the product transfer document;

(E) The test results (or other evidence of the diesel sulfur content) for the diesel fuel in the terminal tank from which the delivery truck was loaded, and copies of the test result reports; and

(F) A description of the procedures used by the truck distributor to avoid diesel contamination (*e.g.*, dedicated trucks).

(vi) A description of any actions taken to prevent sale of the noncompliant diesel fuel, including:

(A) The date and time the regulated party was notified of the high sulfur test result, the date and time the retailer was notified, and the date and time the sale of motor vehicle diesel fuel subject to the 15 ppm sulfur standard under § 80.520(a)(1) was suspended;

(B) A description of the actions taken to prevent sale of the noncompliant diesel fuel; and

(C) The date and time that sales of motor vehicle diesel fuel subject to the 15 ppm sulfur standard under § 80.520(a)(1) from the retail storage tank at issue were resumed, the results of the test used to establish the fuel met applicable standards, and a copy of the test result report.

(vii) A description of the root-cause analysis required in paragraph (e)(5)(i)(D) of this section, including:

(A) A description of the investigation conducted to determine the root-cause of the noncompliant diesel fuel, and the conclusions reached as a result of this investigation; and

(B) A description of the steps taken to prevent future problems from the identified cause.

(8) *Summary survey reports.* The quarterly and annual summary survey reports required under paragraph (e)(3)(v) of this section shall include the following information:

(i) The identification of each sampling area included in a survey and the dates that the samples were collected in that area;

(ii) For each retail outlet sampled:

(A) The identification of the retail outlet;

(B) The refiner or importer brand name displayed, if any;

(C) The pump labeling; and

(D) The sample test result.

(iii) Sulfur level summary statistics by brand and unbranded for each sampling area, strata, survey and annual survey series. These summary statistics shall:

(A) Include the number of samples, and the average, median and range of sulfur levels; and

(B) Be provided separately for the diesel fuel samples from pumps labeled as dispensing motor vehicle diesel fuel subject to the 15 ppm sulfur standard under § 80.520(a)(1), motor vehicle diesel fuel subject to the 500 ppm sulfur standard under § 80.520(c), and pumps that are not labeled.

(iv) The quarterly reports required under this paragraph (e)(8) are due sixty days following the end of the quarter. The annual reports required under this paragraph (e)(8) are due sixty days following the end of the calendar year.

(v) The reports required under this paragraph (e)(8) shall be submitted to EPA in both electronic spreadsheet and hard copy form.

(9) *EPA inspections.* If EPA inspects any facility and determines that the sulfur content of diesel fuel exceeds the 15 ppm standard under § 80.520(a)(1), as adjusted under § 80.580(d), liability for such sulfur content violation under § 80.612 will be treated as provided in paragraph (e)(6) of this section for branded refiners or distributors that participate in the consortium under

this paragraph (e). Any other party deemed liable for a violation under § 80.612 must establish a defense under paragraphs (a) through (d) of this section, as applicable.

(10) *Procedures for obtaining approval of survey plan.* The procedure for obtaining EPA approval of a survey plan under this paragraph (e), and for revocation of such approval, is as follows:

(i) A survey plan that complies with the requirements of this paragraph (e) must be submitted to EPA no later than November 1 of the year preceding the calendar year in which the surveys will be conducted;

(ii) The survey plan must be signed by a responsible officer of the consortium which arranges to have an independent surveyor conduct the survey program;

(iii) The survey plan must be sent to the following address: Director, Compliance and Innovative Strategies Division, U.S. Environmental Protection Agency, 1200 Pennsylvania Ave., NW. Mail Code 6506J, Washington, DC 20460;

(iv) EPA will send a letter to the party submitting a survey plan under this section, either approving or disapproving the survey plan;

(v) EPA may revoke any approval of a survey plan under this section for cause, including an EPA determination that the approved survey plan has proved to be inadequate in practice or that it was not diligently implemented;

(vi) The approving official for a survey plan under this section is the Director of the Compliance and Innovative Strategies Division, Office of Transportation and Air Quality.

(vii) Any notifications or reports required to be submitted to EPA under this paragraph (e) must be directed to the official designated in paragraph (e)(10)(vi) of this section.

(11) *Independent surveyor contract.* (i) No later than December 1 of the year preceding the year in which the surveys will be conducted, the contract with the independent surveyor shall be in effect, and an amount of money necessary to carry out the entire survey plan shall be paid to the independent surveyor or placed into an escrow account with instructions to the escrow agent to pay the money to the independent surveyor during the course of the conduct of the survey plan.

(ii) No later than December 15 of the year preceding the year in which the surveys will be conducted, EPA must receive a copy of the contract with the independent surveyor, proof that the money necessary to carry out the survey plan has either been paid to the independent surveyor or placed into an escrow account, and, if placed into an escrow account, a copy of the escrow agreement, to be sent to the official designated in paragraph (e)(10)(vi) of this section.

(12) *Failure to fulfill requirements.* A failure to fulfill or cause to be fulfilled any of the requirements of this paragraph (e) will cause the option to use the alternative quality assurance requirement under this paragraph (e) to be void *ab initio*.

[66 FR 5136, Jan. 18, 2001, as amended at 69 FR 39204, June 29, 2004; 70 FR 40899, July 15, 2005; 75 FR 22977, Apr. 30, 2010; 75 FR 26127, May 11, 2010]

§ 80.614 What are the alternative defense requirements in lieu of § 80.613(a)(1)(vi)?

Any person who blends a MVNRLM diesel fuel additive package into MVNRLM diesel fuel subject to the 15 ppm sulfur standards of § 80.510(b) or (c) or § 80.520(a) which contains a static dissipater additive that has a sulfur content greater than 15 ppm but whose contribution to the sulfur content of the MVNRLM diesel fuel is less than 0.4 ppm at its maximum recommended concentration, and/or red dye that has a sulfur content greater than 15 ppm but whose contribution to the sulfur content of the MVNRLM diesel fuel is less than 0.04 ppm at its maximum recommended concentration, and which contains no other additives with a sulfur content greater than 15 ppm must establish all the following in order to use this section as an alternative to the defense element under § 80.613(a)(1)(vi):

(a)(1) The blender of the additive package has a sulfur content test result for the MVNRLM diesel fuel prior to blending of the additive package that indicates that the additive package, when added, will not cause the

MVNRLM diesel fuel sulfur content to exceed 15 ppm sulfur.

(2) In cases where the storage tank that contains MVNRLM diesel fuel prior to additization contains multiple fuel batches, the blender of the additive package must have sulfur test results on each batch of MVNRLM diesel fuel that was added to the storage tank during the current and previous volumetric accounting reconciliation (VAR) periods, which indicates that the additive package, when added to the component MVNRLM diesel fuel batch in the storage tank with the highest sulfur level would not cause that component batch to exceed 15 ppm sulfur.

(b) The VAR standard is attained as determined under the provisions of this section. The VAR reconciliation standard is attained when the actual concentration of the additive package used per the VAR formula record under paragraph (f) of this section is less than the concentration that would have caused any batch of MVNRLM diesel fuel to exceed a sulfur content of 15 ppm given the maximum sulfur test result on any MVNRLM diesel fuel batch described in paragraph (a) of this section that is additized with the additive package during the VAR period.

(c) The product transfer document complies with the applicable sulfur information requirements of § 80.591.

(d) If more than one additive package containing a static dissipater additive and/or red dye is used during a VAR period, then a separate VAR formula record must be created for MVNRLM diesel fuel additized for each of the additive packages used. In such cases, the amount of the each additive package used must be accurately and separately measured, either through the use of a separate storage tank, a separate meter, or some other measurement system that is able to accurately distinguish its use.

(e) Recorded volumes of MVNRLM diesel fuel and the additive package must be expressed to the nearest gallon (or smaller units), except that additive package volumes of five gallons or less must be expressed to the nearest tenth of a gallon (or smaller units). However, if the blender's equipment cannot accurately measure to the nearest tenth of a gallon, then such volumes must be rounded upward to the next higher gallon for purposes of determining compliance with this section.

(f) Each VAR formula record must also contain the following information:

(1) *Automated blending facilities*. In the case of an automated additive package blending facility, for each VAR period, for each storage system for an additive package containing a static dissipater additive and/or red dye, and each additive package in that storage system, the following must be recorded:

(i)(A) The manufacturer and commercial identifying name of the package being reconciled, the maximum recommended treatment level, the potential contribution to the sulfur content of the finished fuel that might result when the additive package is used at its maximum recommended treatment level, the intended treatment level, and the contribution to the sulfur content of the finished fuel that would result when the additive package is used at its intended treatment level. The intended treatment level is the treatment level that the additive injection equipment is set to.

(B) The maximum recommended treatment level and the intended treatment level must be expressed in terms of gallons of the additive package per thousand gallons of MVNRLM diesel fuel, and expressed to four significant figures. If the additive package storage system which is the subject of the VAR formula record is a proprietary system under the control of a customer, this fact must be indicated on the record.

(ii) The total volume of the additive package blended into MVNRLM diesel fuel, in accordance with one of the following methods, as applicable.

(A) For a facility which uses in-line meters to measure usage, the total volume of additive package measured, together with supporting data which includes one of the following: the beginning and ending meter readings for each meter being measured, the metered batch volume measurements for each meter being measured, or other comparable metered measurements. The supporting data may be supplied on the VAR formula record or in the form of computer printouts or other

comparable VAR supporting documentation.

(B) For a facility which uses a gauge to measure the inventory of the additive package storage tank, the total volume of additive package shall be calculated from the following equation:

$$\text{Additive package volume} = (A) - (B) + (C) - (D)$$

Where:

A = Initial additive package inventory of the tank

B = Final additive package inventory of the tank

C = Sum of any additions to additive package inventory

D = Sum of any withdrawals from additive package inventory for purposes other than the additization of MVNRLM diesel fuel.

(C) The value of each variable in the equation in paragraph (f)(1)(ii)(B) of this section must be separately recorded on the VAR formula record. In addition, a list of each additive package addition included in variable C and a list of each additive package withdrawal included in variable D must be provided, either on the formula record or as VAR supporting documentation.

(iii) The total volume of MVNRLM diesel fuel to which the additive package has been added, together with supporting data which includes one of the following: the beginning and ending meter measurements for each meter being measured, the metered batch volume measurements for each meter being measured, or other comparable metered measurements. The supporting data may be supplied on the VAR formula record or in the form of computer printouts or other comparable VAR supporting documentation.

(iv) The actual concentration of the additive package, calculated as the total volume of the additive package added (pursuant to paragraph (f)(1)(ii) of this section), divided by the total volume of MVNRLM diesel fuel (pursuant to paragraph (f)(1)(iii) of this section). The concentration must be calculated and recorded to 4 significant figures.

(v) A list of each additive package concentration rate set for the additive package that is the subject of the VAR record, together with the date and description of each adjustment to any initially set concentration. The concentration adjustment information may be supplied on the VAR formula record or in the form of computer printouts or other comparable VAR supporting documentation. No concentration setting is permitted above the maximum recommended concentration supplied by the additive manufacturer, except as described in paragraph (f)(1)(vii) of this section.

(vi) The dates of the VAR period, which shall be no longer than thirty-one days. If the VAR period is contemporaneous with a calendar month, then specifying the month will fulfill this requirement; if not, then the beginning and ending dates and times of the VAR period must be listed. The times may be supplied on the VAR formula record or in supporting documentation. Any adjustment to any additive package concentration rate initially set in the VAR period shall terminate that VAR period and initiate a new VAR period, except as provided in paragraph (f)(1)(vii) of this section.

(vii) The concentration setting for the additive package injector may be changed from the concentration initially set in the VAR period without terminating that VAR period, provided that:

(A) The purpose of the change is to correct a batch under-additization prior to the end of the VAR period and prior to the transfer of the batch to another party, or to correct an equipment malfunction where there has been no over-additization of the additive;

(B) The concentration is immediately returned after the correction to a concentration that fulfills the requirements of this paragraph (f);

(C) The blender creates and maintains documentation establishing the date and adjustments of the correction; and

(D) If the correction is initiated only to rectify an equipment malfunction, and the amount of additive package used in this procedure is not added to MVNRLM diesel fuel within the compliance period, then this amount is subtracted from the additive package volume listed on the VAR formula record. In such a case, the addition of this amount of additive must be reflected in the following VAR period.

(viii) The measured sulfur level for each batch of MVNRLM diesel fuel to which the additive package is added during each VAR period. In cases where the storage tank that contains MVNRLM diesel fuel prior to additization contains multiple fuel batches, a measured sulfur level on each batch added to the storage tank during the current and previous VAR periods must be recorded.

(2) *Non-automated facilities.* In the case of a facility in which hand blending or any other non-automated method is used to blend the additive packages, for each additive package and for each batch of MVNRLM diesel fuel to which the additive package is being added, the following shall be recorded:

(i) The manufacturer and commercial identifying name of the additive package being reconciled, the maximum recommended treatment level, the potential contribution to the sulfur content of the finished fuel that might result when the additive package is used at its maximum recommended treatment level, the intended treatment level, and the contribution to the sulfur content of the finished fuel that would result when the additive package is used at its intended treatment level.

(A) The maximum recommended treatment level and the intended treatment level must be expressed in terms of gallons of additive package per thousand gallons of MVNRLM diesel fuel, and expressed to four significant figures.

(B) If the additive package storage system which is the subject of the VAR formula record is a proprietary system under the control of a customer, this fact must be indicated on the record.

(ii) The date of the additization that is the subject of the VAR formula record.

(iii) The volume of added additive package.

(iv) The volume of the MVNRLM diesel fuel to which the additive package has been added.

(v) The brand (if known) of MVNRLM diesel fuel.

(vi) The actual additive package concentration, calculated as the volume of added additive package (pursuant to paragraph (f)(1)(ii)(B) of this section), divided by the volume of MVNRLM diesel fuel (pursuant to paragraph (f)(1)(iii) of this section). The concentration must be calculated and recorded to four significant figures.

(vii) The measured sulfur level for each batch of MVNRLM diesel fuel to which the additive package is added during each VAR period. In cases where the storage tanks that contains MVNRLM diesel fuel prior to additization contains multiple fuel batches, a measured sulfur level on each batch added to the storage tank during the current and previous VAR periods must be recorded.

(3) *VAR formula records.* Every VAR formula record created pursuant to paragraphs (f)(1) and (f)(2) of this section shall contain the following:

(i) The signature of the creator of the VAR record;

(ii) The date of the creation of the VAR record; and

(iii) A certification of correctness by the creator of the VAR record.

(4) *Electronically-generated VAR formula and supporting records.* (i) Electronically-generated records are acceptable for VAR formula records and supporting documentation (including PTDs), provided that they are complete, accessible, and easily readable. VAR formula records must also be stored with access and audit security, which must restrict to a limited number of specified people those who have the ability to alter or delete the records. In addition, parties maintaining records electronically must make available to EPA the hardware and software necessary to review the records.

(ii) Electronically-generated VAR formula records may use an electronic user identification code to satisfy the signature requirements of paragraph (f)(3)(i) of this section, provided that:

(A) The use of the identification is limited to the record creator; and

(B) A paper record is maintained, which is signed and dated by the VAR formula record creator, acknowledging that the use of that particular user ID on a VAR formula record is equivalent to his/her signature on the document.

(5) *Calibration requirements for automated blending facilities.* Automated static dissipater additive package blenders must calibrate their additive

package equipment at least once in each calendar half year, with the acceptable calibrations being no less than one hundred twenty days apart, except that calibrations may be closer in time so long as at least two calibrations meet the requirements to be in separate halves of the calendar year and no less than 120 days apart. Equipment recalibration is also required each time the static dissipater additive package is changed, unless written documentation indicates that the new additive package has the same viscosity as the previous additive package. Additive package change calibrations may be used to satisfy the semiannual requirement provided that the calibrations occur in the appropriate half calendar year and are no less than one hundred twenty days apart.

(6) *Additional VAR documentation*. The following VAR supporting documentation must also be created and maintained:

(i) For all automated additive package blending facilities, documentation reflecting performance of the calibrations required by paragraph (f)(5) of this section, and any associated adjustments of the automated additive package injection equipment;

(ii) For all blending facilities that blend an additive package containing a static dissipater additive and/or red dye, product transfer documents for all such additive packages, and MVNRLM diesel fuel transferred into or out of the facility that is additized with an additive package containing a static dissipater additive and/or red dye;

(iii) For all automated additive package blending facilities that use an additive package containing a static dissipater additive and/or red dye, documentation establishing the brands (if known) of the MVNRLM diesel fuel which is the subject of the VAR formula record; and

(iv) For all hand blenders of an additive package that contains a static dissipater additive and/or red dye, the documentation, if in the party's possession, supporting the volumes of MVNRLM diesel fuel and additive package reported on the VAR formula record.

(7) *Document retention and availability*. All blenders of an additive package that contains a static dissipater additive and/or red dye shall retain the documents required under this section for a period of five years from the date the VAR formula records and supporting documentation are created, and shall deliver them upon request to the EPA Administrator or the Administrator's authorized representative.

(i) Except as provided in paragraph (f)(7)(iii) of this section, automated additive package blender facilities and hand-blender facilities which are terminals, which physically blend an additive packages that contains a static dissipater additive and/or red dye into MVNRLM diesel fuel, must make immediately available to EPA, upon request, the preceding twelve months of VAR formula records plus the preceding two months of VAR supporting documentation.

(ii) Except as provided in paragraph (f)(7)(iii) of this section, other hand-blending additive package facilities which physically blend additive package that contains a static dissipater additive and/or red dye into MVNRLM diesel fuel must make immediately available to EPA, upon request, the preceding two months of VAR formula records and VAR supporting documentation.

(iii) Facilities which have centrally maintained records at other locations, or have customers who maintain their own records at other locations for their proprietary additive package injection systems, and which can document this fact to the Agency, may have until the start of the next business day after the EPA request to supply VAR supporting documentation, or longer if approved by the Agency.

(iv) In this paragraph (f)(7), the term ''immediately available'' means that the records must be provided, electronically or otherwise, within approximately one hour of EPA's request, or within a longer time frame as approved by EPA.

[69 FR 39205, June 29, 2004, as amended at 71 FR 25723, May 1, 2006]

§ 80.615 What penalties apply under this subpart?

(a) Any person liable for a violation under § 80.612 is subject to civil penalties as specified in section 205 of the

Clean Air Act (42 U.S.C. 7524) for every day of each such violation and the amount of economic benefit or savings resulting from each violation.

(b)(1) Any person liable under § 80.612(a)(1) for a violation of an applicable standard or requirement under this subpart I or for causing another party to violate such standard or requirement, is subject to a separate day of violation for each and every day the non-complying diesel fuel remains any place in the distribution system.

(2) Any person liable under § 80.612(a)(2) for causing motor vehicle diesel fuel, NRLM diesel fuel, ECA marine fuel, heating oil, or other distillate fuel to be in the distribution system which does not comply with an applicable standard or requirement of this subpart I, except as allowed under 40 CFR part 1043, is subject to a separate day of violation for each and every day that the noncomplying fuel remains any place in the diesel fuel distribution system.

(3) Any person liable under § 80.612(a)(1) for blending into diesel fuel an additive violating the applicable sulfur standard pursuant to the requirements of § 80.521(a) or (b), as applicable, or of causing another party to so blend such an additive, is subject to a separate day of violation for each and every day the motor vehicle diesel fuel or NRLM diesel fuel into which the noncomplying additive was blended, remains any place in the fuel distribution system.

(4) For purposes of this paragraph (b):

(i) The length of time the motor vehicle diesel fuel, NRLM diesel fuel, ECA marine fuel, heating oil, or other distillate fuel in question remained in the diesel fuel distribution system is deemed to be 25 days, except as further specified in paragraph (b)(4)(ii) of this section.

(ii) The length of time is deemed not to be 25 days if a person subject to liability demonstrates by reasonably specific showings, by direct or circumstantial evidence, that the noncomplying motor vehicle, NR diesel fuel, NRLM diesel fuel, ECA marine fuel, heating oil, or distillate fuel remained in the distribution system for fewer than or more than 25 days.

(c) Any person liable under § 80.612(b) for failure to meet, or causing a failure to meet, a provision of this subpart is liable for a separate day of violation for each and every day such provision remains unfulfilled.

[69 FR 39208, June 29, 2004, as amended at 75 FR 22977, Apr. 30, 2010]

§ 80.616 What are the enforcement exemptions for California diesel distributed within the State of California?

(a) For the purpose of this section, ''California diesel fuel'' is defined as any diesel fuel physically within the State of California that satisfies all requirements of Title 13, California Code of Regulations, Sections 2281–2285, and is sold, intended for sale, or made available for sale as a motor fuel in the State of California, subsequent to May 31, 2006.

(b) Any retailer or wholesale purchaser-consumer of California diesel fuel is, with regard to such diesel fuel, exempt from the labeling requirements contained in §§ 80.570, 80.571, 80.572, 80.573, and 80.574.

(c)(1) Any refiner, importer, or distributor of California diesel fuel is, with regard to such diesel fuel, exempt from the product transfer requirements of § 80.590, provided that the product transfer document contains the following statement:

''California diesel fuel. Maximum 15 ppm sulfur.''

(2) Product codes may be used to satisfy this product transfer document requirement.

(d) Any refiner, importer, or distributor of California diesel fuel is, with regard to such diesel fuel, exempt from the designation requirements of § 80.598, provided that:

(1) The refiner, importer, or distributor does not transfer custody of the California diesel fuel to facility outside the State of California;

(2) The fuel is intended to be sold or made available for sale in the State of California; and

(3) The PTD requirements in paragraph (f) of the section are satisfied.

(e) Any refiner, importer, or distributor of California diesel fuel is, with regard to such diesel fuel, exempt

from the volume balance requirements of § 80.599.

(f) Any refiner, importer, or distributor of California diesel fuel is, with regard to such diesel fuel, exempt from the recordkeeping requirements under designate and track provisions of § 80.600.

(g) Any refiner, importer, or distributor of California diesel fuel is, with regard to such diesel fuel, exempt from the reporting requirements for the purposes of the designate and track provisions of § 80.601.

(h) Any refiner, importer, or distributor of California diesel fuel is, with regard to such diesel fuel, exempt from the recordkeeping requirements for entities in the MV or NRLM diesel fuel and diesel fuel additive production, importation, and distribution systems of §§ 80.592 and 80.602 except those relating to sampling and testing, under §§ 80.581, 80.584, 80.585, and 80.586.

(i) Any refiner or importer of California diesel fuel is, with regard to such diesel fuel, exempt from the annual reporting requirements for NRLM diesel under § 80.604.

[71 FR 25725, May 1, 2006]

§ 80.617 How may California diesel fuel be distributed or sold outside of the State of California?

California diesel may be distributed or sold outside of the State of California provided the provisions of either paragraph (a) or (b) of this section are satisfied:

(a) *Distribution of taxed or dyed California diesel fuel.* California diesel fuel that is distributed from a truck loading terminal after such diesel has been taxed or dyed may be distributed or sold outside of the State of California, provided that it is accompanied by a Product Transfer Document that states: ''California diesel fuel. Maximum 15 ppm sulfur.''; or

(b) *Distribution of untaxed and undyed diesel California diesel fuel.* California diesel may be distributed or sold outside of the State of California without having been dyed or taxed provided that the requirements of either paragraph (b)(1) or (b)(2) of this section are satisfied. (Note that the requirements of IRS code 26 CFR part 48 along with other applicable requirements outside of this 40 CFR part 80 subpart I must also be satisfied.)

(1)(i) Prior to shipment outside the State of California, the California diesel fuel meets all requirements of § 80.616 and meets all of the requirements of 40 CFR part 80, subpart I that are not exempted under this section;

(ii) The California diesel fuel is shipped out of the state via pipeline;

(iii) The pipeline shipping the California diesel out of state maintains the California diesel fuel designation while the product is in the pipeline's custody;

(iv) The pipeline provides a product transfer document that clearly indicates that the product is designated as California diesel fuel;

(v) Upon delivery into the terminal, the terminal receiving the California diesel fuel redesignates it as motor vehicle diesel meeting the 15 ppm sulfur standard; and

(vi) The terminal includes the volumes of California diesel fuel redesignated as motor vehicle diesel fuel in the total volume of motor vehicle diesel designated meeting the 15 ppm sulfur standard received by the terminal, per the volume balance and anti-downgrading equations for motor vehicle diesel fuel found in § 80.599(b) and (e).

(2)(i) The California diesel fuel is delivered via pipeline to a terminal outside the State of California that has a tank dedicated to the receipt of California diesel fuel and which intends to distribute the diesel fuel from the dedicated tank back into the State of California;

(ii) The terminal must maintain the designation of the diesel fuel as ''California diesel fuel'' and not redesignate it to another product;

(iii) The product transfer documents for California diesel fuel distributed by a terminal outside of the state of California must indicate ''California diesel fuel. Maximum 15 ppm sulfur.''; and,

(iv) Any volume of California diesel fuel distributed by a terminal outside the state of California must be taxed or dyed and must be excluded from the terminal's volume balance equations under § 80.599.

[71 FR 25726, May 1, 2006]

§§ 80.618–80.619 [Reserved]

PROVISIONS FOR FOREIGN REFINERS AND IMPORTERS FOR MOTOR VEHICLE DIESEL FUEL SUBJECT TO A TEMPORARY COMPLIANCE OPTION OR HARDSHIP PROVISION

§ 80.620 What are the additional requirements for diesel fuel or distillates produced by foreign refineries subject to a temporary refiner compliance option, hardship provisions, or motor vehicle or NRLM diesel fuel credit provisions?

(a) *Definitions.* (1) A foreign refinery is a refinery that is located outside the United States, the Commonwealth of Puerto Rico, the Virgin Islands, Guam, American Samoa, and the Commonwealth of the Northern Mariana Islands (collectively referred to in this section as ''the United States'').

(2) A foreign refiner is a person who meets the definition of refiner under § 80.2(i) for a foreign refinery.

(3) A diesel fuel program foreign refiner (''DFR'') is a foreign refiner that has been approved by EPA for participation in any motor vehicle diesel fuel or NRLM diesel fuel provision of §§ 80.530 through 80.533, or § 80.535, § 80.536, § 80.540, § 80.552, § 80.553, § 80.554, § 80.560 or § 80.561 (collectively referred to as ''diesel foreign refiner program'').

(4) ''DFR-Diesel'' means diesel fuel or distillate fuel as applicable under subpart I of this part produced at a DFR refinery that is imported into the United States.

(5) ''Non-DFR-Diesel'' means diesel fuel or distillate fuel that is produced at a foreign refinery that has not been approved as a DFR foreign refiner, diesel fuel produced at a DFR foreign refinery that is not imported into the United States, and diesel fuel produced at a DFR foreign refinery during a period when the foreign refiner has opted to not participate in the DFR-Diesel foreign refiner program under paragraph (c)(3) of this section.

(6) ''Certified DFR-Diesel'' means DFR-Diesel the foreign refiner intends to include in the foreign refinery's compliance calculations under any provisions of §§ 80.530 through 80.533, or § 80.535, § 80.536, § 80.540, § 80.552, § 80.553, § 80.554, § 80.560 or § 80.561 and does include in these compliance calculations when reported to EPA.

(7) ''Non-Certified DFR-Diesel'' means DFR-Diesel fuel that a DFR foreign refiner imports to the United States that is not Certified DFR-Diesel.

(b) *Baseline.* For any foreign refiner to obtain approval under the diesel foreign refiner program of this subpart for any refinery, it must apply for approval under the applicable provisions of this subpart. To obtain approval the refiner is required, as applicable, to demonstrate a volume baseline under subpart I of this part.

(1) The refiner shall follow the procedures, applicable to volume baselines and using diesel fuel, or if applicable, heating oil, instead of gasoline, in §§ 80.91 through 80.93 to establish the volume of motor vehicle diesel fuel that was produced at the refinery and imported into the United States during the applicable years for purposes of establishing a baseline under Subpart I for applicable fuels produced for use in the United States.

(2) In making determinations for foreign refinery baselines EPA will consider all information supplied by a foreign refiner, and in addition may rely on any and all appropriate assumptions necessary to make such determinations.

(3) Where a foreign refiner submits a petition that is incomplete or inadequate to establish an accurate baseline, and the refiner fails to correct this deficiency after a request for more information, EPA will not assign an individual refinery baseline.

(c) *General requirements for DFR foreign refiners.* A foreign refiner of a refinery that is approved under the diesel foreign refiner program of this subpart must designate each batch of diesel fuel produced at the foreign refinery that is exported to the United States as either Certified DFR-Diesel or as Non-Certified DFR-Diesel, except as provided in paragraph (c)(3) of this section. It must further designate all Certified DFR-Diesel as provided in § 80.598, and designate whether the diesel fuel is dyed or undyed, and for heating oil and/or locomotive or marine diesel fuel whether it is marked or unmarked under § 80.510(d) through (f). It

must further designate any credits earned as either nonroad diesel credits or motor vehicle diesel credits.

(1) In the case of Certified DFR-Diesel, the foreign refiner must meet all requirements that apply to refiners under this subpart, except that:

(i) For purposes of complying with the compliance option requirements of § 80.530, motor vehicle diesel fuel produced by a foreign refinery must comply separately for each Credit Trading Area of import, as defined in § 80.531(a)(5).

(ii) For purposes of complying with the compliance option requirements of § 80.530, credits obtained from any other refinery or from any importer must have been generated in the same Credit Trading Area as the Credit Trading Area of import of the fuel for which credits are needed to achieve compliance.

(iii) For purposes of generating credits under § 80.531, credits shall be generated separately by Credit Trading Area of import and shall be designated by Credit Trading Area of importation and by port of importation.

(2) In the case of Non-Certified DFR-Diesel, the foreign refiner shall meet all the following requirements:

(i) The designation requirements in this section.

(ii) The reporting requirements in this section and in §§ 80.593, 80.594, 80.601, and 80.604.

(iii) The product transfer document requirements in this section and in §§ 80.590 and 80.591.

(iv) The prohibitions in this section and in § 80.610.

(3)(i) Any foreign refiner that has been approved to produce diesel fuel subject to the diesel foreign refiner program for a foreign refinery under this subpart may elect to classify no diesel fuel imported into the United States as DFR-Diesel provided the foreign refiner notifies EPA of the election no later than 60 calendar days prior to the beginning of the compliance period.

(ii) An election under paragraph (c)(3)(i) of this section shall be for a 12 month compliance period and apply to all diesel fuel that is produced by the foreign refinery that is imported into the United States, and shall remain in effect for each succeeding year unless and until the foreign refiner notifies EPA of the termination of the election. The change in election shall take effect at the beginning of the next annual compliance period.

(d) *Designation, product transfer documents, and foreign refiner certification.* (1) Any foreign refiner of a foreign refinery that has been approved by EPA to produce motor vehicle diesel fuel subject to the diesel foreign refiner program must designate each batch of DFR-Diesel as such at the time the diesel fuel is produced, unless the refiner has elected to classify no diesel fuel exported to the United States as DFR-Diesel under paragraph (c)(3) of this section.

(2) On each occasion when any person transfers custody or title to any DFR-Diesel prior to its being imported into the United States, it must include the following information as part of the product transfer document information in this section:

(i) Designation of the diesel fuel or distillate as Certified DFR-Diesel or as Non-Certified DFR-Diesel, and if it is Certified DFR-Diesel, further designate the fuel pursuant to § 80.598, and whether the diesel fuel or distillate is dyed or undyed, and for heating oil whether it is marked or unmarked under § 80.510(d) through (f), and all other applicable product transfer document information required under § 80.590; and

(ii) The name and EPA refinery registration number (under § 80.597) of the refinery where the DFR-Diesel was produced.

(3) On each occasion when DFR-Diesel is loaded onto a vessel or other transportation mode for transport to the United States, the foreign refiner shall prepare a certification for each batch of the DFR-Diesel that meets the following requirements.

(i) The certification shall include the report of the independent third party under paragraph (f) of this section, and the following additional information:

(A) The name and EPA registration number of the refinery that produced the DFR-Diesel;

(B) The identification of the diesel fuel as Certified DFR-Diesel or Non-Certified DFR-Diesel;

(C) The volume of DFR-Diesel being transported, in gallons;

(D) In the case of Certified DFR-Diesel:

(*1*) The sulfur content as determined under paragraph (f) of this section, and the applicable designations stated in paragraph (d)(2)(i) of this section; and

(*2*) A declaration that the DFR-Diesel is being included in the applicable compliance calculations required by EPA under this subpart.

(ii) The certification shall be made part of the product transfer documents for the DFR-Diesel.

(e) *Transfers of DFR-Diesel to non-United States markets.* The foreign refiner is responsible to ensure that all diesel fuel classified as DFR-Diesel is imported into the United States. A foreign refiner may remove the DFR-Diesel classification, and the diesel fuel need not be imported into the United States, but only if:

(1)(i) The foreign refiner excludes:

(A) The volume of diesel from the refinery's compliance report under § 80.593, § 80.601, or § 80.604; and

(B) In the case of Certified DFR-Diesel, the volume of the diesel fuel from the compliance report under § 80.593, § 80.601, or § 80.604.

(ii) The exclusions under paragraph (e)(1)(i) of this section shall be on the basis of the designations under § 80.598 and this section, and volumes determined under paragraph (f) of this section.

(2) The foreign refiner obtains sufficient evidence in the form of documentation that the diesel fuel was not imported into the United States.

(f) *Load port independent sampling, testing and refinery identification.* (1) On each occasion that DFR-Diesel is loaded onto a vessel for transport to the United States a foreign refiner shall have an independent third party:

(i) Inspect the vessel prior to loading and determine the volume of any tank bottoms;

(ii) Determine the volume of DFR-Diesel loaded onto the vessel (exclusive of any tank bottoms before loading);

(iii) Obtain the EPA-assigned registration number of the foreign refinery;

(iv) Determine the name and country of registration of the vessel used to transport the DFR-Diesel to the United States; and

(v) Determine the date and time the vessel departs the port serving the foreign refinery.

(2) On each occasion that Certified DFR-Diesel is loaded onto a vessel for transport to the United States a foreign refiner shall have an independent third party:

(i) Collect a representative sample of the Certified DFR-Diesel from each vessel compartment subsequent to loading on the vessel and prior to departure of the vessel from the port serving the foreign refinery;

(ii) Determine the sulfur content value for each compartment, and if applicable, the marker content under § 80.510(d) through (f) using an approved methodology as specified in §§ 80.580 through 80.586 by one of the following:

(A) The third party analyzing each sample; or

(B) The third party observing the foreign refiner analyze the sample;

(iii) Review original documents that reflect movement and storage of the certified DFR-Diesel from the refinery to the load port, and from this review determine:

(A) The refinery at which the DFR-Diesel was produced; and

(B) That the DFR-Diesel remained segregated from:

(*1*) Non-DFR-Diesel and Non-Certified DFR-Diesel; and

(*2*) Other Certified DFR-Diesel produced at a different refinery.

(3) The independent third party shall submit a report:

(i) To the foreign refiner containing the information required under paragraphs (f)(1) and (f)(2) of this section, to accompany the product transfer documents for the vessel; and

(ii) To the Administrator containing the information required under paragraphs (f)(1) and (f)(2) of this section, within thirty days following the date of the independent third party's inspection. This report shall include a description of the method used to determine the identity of the refinery at which the diesel fuel or distillate was produced, assurance that the diesel fuel or distillate remained segregated as specified in paragraph (n)(1) of this section, and a description of the diesel

fuel's movement and storage between production at the source refinery and vessel loading.

(4) The independent third party must:

(i) Be approved in advance by EPA, based on a demonstration of ability to perform the procedures required in this paragraph (f);

(ii) Be independent under the criteria specified in § 80.65(e)(2)(iii); and

(iii) Sign a commitment that contains the provisions specified in paragraph (i) of this section with regard to activities, facilities and documents relevant to compliance with the requirements of this paragraph (f).

(g) *Comparison of load port and port of entry testing.* (1)(i) Any foreign refiner and any United States importer of Certified DFR-Diesel shall compare the results from the load port testing under paragraph (f) of this section, with the port of entry testing as reported under paragraph (o) of this section, for the volume of diesel fuel and the sulfur content value; except as specified in paragraph (g)(1)(ii) of this section.

(ii) Where a vessel transporting Certified DFR-Diesel off loads this diesel fuel at more than one United States port of entry, and the conditions of paragraph (g)(2)(i) of this section are met at the first United States port of entry, the requirements of paragraph (g)(2) of this section do not apply at subsequent ports of entry if the United States importer obtains a certification from the vessel owner that meets the requirements of paragraph (s) of this section, that the vessel has not loaded any diesel fuel or blendstock between the first United States port of entry and the subsequent port of entry.

(2)(i) The requirements of this paragraph (g)(2) apply if—

(A) The temperature-corrected volumes determined at the port of entry and at the load port differ by more than one percent; or

(B) The sulfur content value determined at the port of entry is higher than the sulfur content value determined at the load port, and the amount of this difference is greater than the reproducibility amount specified for the port of entry test result by the American Society of Testing and Materials (ASTM) for a test method used for testing the port of entry sample under the provisions §§ 80.580 through 80.586.

(ii) The United States importer and the foreign refiner shall treat the diesel fuel as Non-Certified DFR-Diesel, and the foreign refiner shall exclude the diesel fuel volume from its diesel fuel volumes calculations and sulfur standard designations under § 80.598.

(h) *Attest requirements.* Refiners, for each annual compliance period, must arrange to have an attest engagement performed of the underlying documentation that forms the basis of any report required under this subpart. The attest engagement must comply with the procedures and requirements that apply to refiners under §§ 80.125 through 80.130, or other applicable attest engagement provisions, and must be submitted to the Administrator of EPA by August 31 of each year for the prior annual compliance period. The following additional procedures shall be carried out for any foreign refiner of DFR-Diesel.

(1) The inventory reconciliation analysis under § 80.128(b) and the tender analysis under § 80.128(c) shall include Non-DFR-Diesel.

(2) Obtain separate listings of all tenders of Certified DFR-Diesel and of Non-Certified DFR-Diesel, and obtain separate listings of Certified DFR-Diesel based on whether it is 15 ppm sulfur content diesel fuel, 500 ppm sulfur content diesel fuel or high sulfur fuel having a sulfur content greater than 500 ppm (and if so, whether the fuel is heating oil, small refiner diesel fuel, diesel fuel produced through the use of credits, or other applicable designation under § 80.598). Agree the total volume of tenders from the listings to the diesel fuel inventory reconciliation analysis in § 80.128(b), and to the volumes determined by the third party under paragraph (f)(1) of this section.

(3) For each tender under paragraph (h)(2) of this section, where the diesel fuel is loaded onto a marine vessel, report as a finding the name and country of registration of each vessel, and the volumes of DFR-Diesel loaded onto each vessel.

(4) Select a sample from the list of vessels identified in paragraph (h)(3) of this section used to transport Certified DFR-Diesel, in accordance with the

guidelines in § 80.127, and for each vessel selected perform the following:

(i) Obtain the report of the independent third party, under paragraph (f) of this section, and of the United States importer under paragraph (o) of this section.

(A) Agree the information in these reports with regard to vessel identification, diesel fuel volumes and sulfur content test results.

(B) Identify, and report as a finding, each occasion the load port and port of entry sulfur content and volume results differ by more than the amounts allowed in paragraph (g) of this section, and determine whether the foreign refiner adjusted its refinery calculations as required in paragraph (g) of this section.

(ii) Obtain the documents used by the independent third party to determine transportation and storage of the Certified DFR-Diesel from the refinery to the load port, under paragraph (f) of this section. Obtain tank activity records for any storage tank where the Certified DFR-Diesel is stored, and pipeline activity records for any pipeline used to transport the Certified DFR-Diesel, prior to being loaded onto the vessel. Use these records to determine whether the Certified DFR-Diesel was produced at the refinery that is the subject of the attest engagement, and whether the Certified DFR-Diesel was mixed with any Non-Certified DFR-Diesel, Non-DFR-Diesel, or any Certified DFR-Diesel produced at a different refinery.

(5) Select a sample from the list of vessels identified in paragraph (h)(3) of this section used to transport certified and Non-Certified DFR-Diesel, in accordance with the guidelines in § 80.127, and for each vessel selected perform the following:

(i) Obtain a commercial document of general circulation that lists vessel arrivals and departures, and that includes the port and date of departure of the vessel, and the port of entry and date of arrival of the vessel.

(ii) Agree the vessel's departure and arrival locations and dates from the independent third party and United States importer reports to the information contained in the commercial document.

(6) Obtain separate listings of all tenders of Non-DFR-Diesel, and perform the following:

(i) Agree the total volume and sulfur content of tenders from the listings to the diesel fuel inventory reconciliation analysis in § 80.128(b).

(ii) Obtain a separate listing of the tenders under this paragraph (h)(6) where the diesel fuel is loaded onto a marine vessel. Select a sample from this listing in accordance with the guidelines in § 80.127, and obtain a commercial document of general circulation that lists vessel arrivals and departures, and that includes the port and date of departure and the ports and dates where the diesel fuel was off loaded for the selected vessels. Determine and report as a finding the country where the diesel fuel was off loaded for each vessel selected.

(7) In order to complete the requirements of this paragraph (h) an auditor shall:

(i) Be independent of the foreign refiner;

(ii) Be licensed as a Certified Public Accountant in the United States and a citizen of the United States, or be approved in advance by EPA based on a demonstration of ability to perform the procedures required in §§ 80.125 through 80.130 and this paragraph (h); and

(iii) Sign a commitment that contains the provisions specified in paragraph (i) of this section with regard to activities and documents relevant to compliance with the requirements of §§ 80.125 through 80.130 and this paragraph (h).

(i) *Foreign refiner commitments.* Any foreign refiner shall commit to and comply with the provisions contained in this paragraph (i) as a condition to being approved for a temporary refiner diesel fuel program option.

(1) Any United States Environmental Protection Agency inspector or auditor must be given full, complete and immediate access to conduct inspections and audits of the foreign refinery.

(i) Inspections and audits may be either announced in advance by EPA, or unannounced.

(ii) Access will be provided to any location where:

(A) Diesel fuel is produced;

(B) Documents related to refinery operations are kept;

(C) Diesel fuel or blendstock samples are tested or stored; and

(D) DFR-Diesel is stored or transported between the foreign refinery and the United States, including storage tanks, vessels and pipelines.

(iii) Inspections and audits may be by EPA employees or contractors to EPA.

(iv) Any documents requested that are related to matters covered by inspections and audits must be provided to an EPA inspector or auditor on request.

(v) Inspections and audits by EPA may include review and copying of any documents related to:

(A) Refinery baseline establishment, if applicable, including the volume, sulfur content and dye and marker status of diesel fuel, heating oil and other distillates; transfers of title or custody of any diesel fuel, heating oil or blendstocks whether DFR-Diesel or Non-DFR-Diesel, produced at the foreign refinery during the period January 1, 1998 through the date of the refinery baseline petition or through the date of the inspection or audit if a baseline petition has not been approved, and any work papers related to refinery baseline establishment;

(B) The volume and sulfur content of DFR-Diesel;

(C) The proper classification of diesel fuel as being DFR-Diesel or as not being DFR-Diesel, or as Certified DFR-Diesel or as Non-Certified DFR-Diesel, and all other relevant designations under this subpart, including § 80.598 and this section;

(D) Transfers of title or custody to DFR-Diesel;

(E) Sampling and testing of DFR-Diesel;

(F) Work performed and reports prepared by independent third parties and by independent auditors under the requirements of this section, including work papers; and

(G) Reports prepared for submission to EPA, and any work papers related to such reports.

(vi) Inspections and audits by EPA may include taking samples of diesel fuel, heating oil, other distillates, diesel fuel additives or blendstock, dyes and chemical markers and interviewing employees.

(vii) Any employee of the foreign refiner must be made available for interview by the EPA inspector or auditor, on request, within a reasonable time period.

(viii) English language translations of any documents must be provided to an EPA inspector or auditor, on request, within 10 working days.

(ix) English language interpreters must be provided to accompany EPA inspectors and auditors, on request.

(2) An agent for service of process located in the District of Columbia shall be named, and service on this agent constitutes service on the foreign refiner or any employee of the foreign refiner for any action by EPA or otherwise by the United States related to the requirements of this subpart.

(3) The forum for any civil or criminal enforcement action related to the provisions of this section for violations of the Clean Air Act or regulations promulgated thereunder shall be governed by the Clean Air Act, including the EPA administrative forum where allowed under the Clean Air Act.

(4) United States substantive and procedural laws shall apply to any civil or criminal enforcement action against the foreign refiner or any employee of the foreign refiner related to the provisions of this section.

(5) Submitting a petition for participation in the diesel foreign refiner program or producing and exporting diesel fuel or heating oil under any such program, and all other actions to comply with the requirements of this subpart relating to participation in any diesel foreign refiner program, or to establish an individual refinery motor vehicle diesel fuel volume baseline or other baseline under subpart I of this part (if applicable) constitute actions or activities that satisfy the provisions of 28 U.S.C. 1605(a)(2), but solely with respect to actions instituted against the foreign refiner, its agents and employees in any court or other tribunal in the United States for conduct that violates the requirements applicable to the foreign refiner under this subpart, including conduct that violates the False Statements Accountability Act of 1996 (18 U.S.C. 1001) and section

113(c)(2) of the Clean Air Act (42 U.S.C. 7413).

(6) The foreign refiner, or its agents or employees, will not seek to detain or to impose civil or criminal remedies against EPA inspectors or auditors, whether EPA employees or EPA contractors, for actions performed within the scope of EPA employment related to the provisions of this section.

(7) The commitment required by this paragraph (i) shall be signed by the owner or president of the foreign refiner business.

(8) In any case where DFR-Diesel produced at a foreign refinery is stored or transported by another company between the refinery and the vessel that transports the DFR-Diesel to the United States, the foreign refiner shall obtain from each such other company a commitment that meets the requirements specified in paragraphs (i)(1) through (7) of this section, and these commitments shall be included in the foreign refiner's petition to participate in any diesel foreign refiner program .

(j) *Sovereign immunity*. By submitting a petition for participation in any diesel foreign refiner program under this subpart (and baseline, if applicable) under this section, or by producing and exporting diesel fuel to the United States under any such program, the foreign refiner, and its agents and employees, without exception, become subject to the full operation of the administrative and judicial enforcement powers and provisions of the United States without limitation based on sovereign immunity, with respect to actions instituted against the foreign refiner, its agents and employees in any court or other tribunal in the United States for conduct that violates the requirements applicable to the foreign refiner under this subpart including conduct that violates the False Statements Accountability Act of 1996 (18 U.S.C. 1001) and section 113(c)(2) of the Clean Air Act (42 U.S.C. 7413).

(k) *Bond posting*. Any foreign refiner shall meet the requirements of this paragraph (k) as a condition to approval for any diesel foreign refiner program under this subpart.

(1) The foreign refiner shall post a bond of the amount calculated using the following equation:

$$\text{Bond} = G \times \$\,0.01$$

Where:

Bond = amount of the bond in U.S. dollars

G = the applicable volume baseline under Subpart I for diesel fuel or distillate produced at the foreign refinery and exported to the United States, in gallons.

(2) Bonds shall be posted by:

(i) Paying the amount of the bond to the Treasurer of the United States;

(ii) Obtaining a bond in the proper amount from a third party surety agent that is payable to satisfy United States administrative or judicial judgments against the foreign refiner, provided EPA agrees in advance as to the third party and the nature of the surety agreement; or

(iii) An alternative commitment that results in assets of an appropriate liquidity and value being readily available to the United States, provided EPA agrees in advance as to the alternative commitment.

(3) Bonds posted under this paragraph (k) shall—

(i) Be used to satisfy any judicial judgment that results from an administrative or judicial enforcement action for conduct in violation of this subpart, including where such conduct violates the False Statements Accountability Act of 1996 (18 U.S.C. 1001) and section 113(c)(2) of the Clean Air Act (42 U.S.C. 7413);

(ii) Be provided by a corporate surety that is listed in the United States Department of Treasury Circular 570 ''Companies Holding Certificates of Authority as Acceptable Sureties on Federal Bonds;'' and

(iii) Include a commitment that the bond will remain in effect for at least five years following the end of latest annual reporting period that the foreign refiner produces diesel fuel pursuant to the requirements of this subpart.

(4) On any occasion a foreign refiner bond is used to satisfy any judgment, the foreign refiner shall increase the bond to cover the amount used within 90 days of the date the bond is used.

(5) If the bond amount for a foreign refiner increases, the foreign refiner shall increase the bond to cover the shortfall within 90 days of the date the bond amount changes. If the bond amount decreases, the foreign refiner

may reduce the amount of the bond beginning 90 days after the date the bond amount changes.

(l) [Reserved]

(m) *English language reports.* Any report or other document submitted to EPA by a foreign refiner shall be in English language, or shall include an English language translation.

(n) *Prohibitions.* (1) No person may combine Certified DFR-Diesel with any Non-Certified DFR-Diesel or Non-DFR-Diesel, and no person may combine Certified DFR-Diesel with any Certified DFR-Diesel produced at a different refinery, until the importer has met all the requirements of paragraph (o) of this section, except as provided in paragraph (e) of this section. No person may violate the product segregation requirements of § 80.511.

(2) No foreign refiner or other person may cause another person to commit an action prohibited in paragraph (n)(1) of this section, or that otherwise violates the requirements of this section.

(o) *United States importer requirements.* Any United States importer shall meet the following requirements:

(1) Each batch of imported diesel fuel and heating oil shall be classified by the importer as being DFR-Diesel or as Non-DFR-Diesel, and each batch classified as DFR-Diesel shall be further classified as Certified DFR-Diesel or as Non-Certified DFR-Diesel, and each batch of Certified DFR-Diesel shall be further designated pursuant to the designation requirements of § 80.598 and this section.

(2) Diesel fuel shall be classified as Certified DFR-Diesel or as Non-Certified DFR-Diesel according to the designation by the foreign refiner if this designation is supported by product transfer documents prepared by the foreign refiner as required in paragraph (d) of this section, unless the diesel fuel is classified as Non-Certified DFR-Diesel under paragraph (g) of this section. Additionally, the importer shall comply with all requirements of this subpart applicable to importers.

(3) For each diesel fuel batch classified as DFR-Diesel, any United States importer shall perform the following procedures.

(i) In the case of both Certified and Non-Certified DFR-Diesel, have an independent third party:

(A) Determine the volume of diesel fuel in the vessel;

(B) Use the foreign refiner's DFR-Diesel certification to determine the name and EPA-assigned registration number of the foreign refinery that produced the DFR-Diesel;

(C) Determine the name and country of registration of the vessel used to transport the DFR-Diesel to the United States; and

(D) Determine the date and time the vessel arrives at the United States port of entry.

(ii) In the case of Certified DFR-Diesel, have an independent third party:

(A) Collect a representative sample from each vessel compartment subsequent to the vessel's arrival at the United States port of entry and prior to off loading any diesel fuel from the vessel;

(B) Obtain the compartment samples; and

(C) Determine the sulfur content value, and if applicable, the marker content, of each compartment sample using an appropriate methodology as specified in §§ 80.580 through 80.586 by the third party analyzing the sample or by the third party observing the importer analyze the sample.

(4) Any importer shall submit reports within 30 days following the date any vessel transporting DFR-Diesel arrives at the United States port of entry:

(i) To the Administrator containing the information determined under paragraph (o)(3) of this section; and

(ii) To the foreign refiner containing the information determined under paragraph (o)(3)(ii) of this section, and including identification of the port and Credit Trading Area at which the product was offloaded.

(5) Any United States importer shall meet the requirements specified in §§ 80.510 and 80.520 and all other requirements of this subpart, for any imported diesel fuel or heating oil that is not classified as Certified DFR-Diesel under paragraph (o)(2) of this section.

(p) *Truck imports of Certified DFR-Diesel produced at a foreign refinery.* (1) Any refiner whose Certified DFR-Diesel is transported into the United States by

truck may petition EPA to use alternative procedures to meet the following requirements:

(i) Certification under paragraph (d)(5) of this section;

(ii) Load port and port of entry sampling and testing under paragraphs (f) and (g) of this section;

(iii) Attest under paragraph (h) of this section; and

(iv) Importer testing under paragraph (o)(3) of this section.

(2) These alternative procedures must ensure Certified DFR-Diesel remains segregated from Non-Certified DFR-Diesel and from Non-DFR-Diesel until it is imported into the United States. The petition will be evaluated based on whether it adequately addresses the following:

(i) Provisions for monitoring pipeline shipments, if applicable, from the refinery, that ensure segregation of Certified DFR-Diesel from that refinery from all other diesel fuel;

(ii) Contracts with any terminals and/or pipelines that receive and/or transport Certified DFR-Diesel, that prohibit the commingling of Certified DFR-Diesel with any of the following:

(A) Other Certified DFR-Diesel from other refineries.

(B) All Non-Certified DFR-Diesel.

(C) All Non-DFR-Diesel.

(D) All diesel fuel or heating oil products required to be segregated under this subpart;

(iii) Procedures for obtaining and reviewing truck loading records and United States import documents for Certified DFR-Diesel to ensure that such diesel fuel is only loaded into trucks making deliveries to the United States;

(iv) Attest procedures to be conducted annually by an independent third party that review loading records and import documents based on volume reconciliation, or other criteria, to confirm that all Certified DFR-Diesel remains segregated throughout the distribution system and is only loaded into trucks for import into the United States.

(3) The petition required by this section must be submitted to EPA along with the application for temporary refiner relief individual refinery diesel sulfur standard under this subpart.

(q) *Withdrawal or suspension of a foreign refinery's temporary refinery flexibility program approval.* EPA may withdraw or suspend a diesel refiner baseline or standard approval for a foreign refinery where—

(1) A foreign refiner fails to meet any requirement of this section;

(2) A foreign government fails to allow EPA inspections as provided in paragraph (i)(1) of this section;

(3) A foreign refiner asserts a claim of, or a right to claim, sovereign immunity in an action to enforce the requirements in this subpart; or

(4) A foreign refiner fails to pay a civil or criminal penalty that is not satisfied using the foreign refiner bond specified in paragraph (k) of this section.

(r) *Early use of a foreign refiner motor vehicle diesel fuel baseline.* (1) A foreign refiner may begin using an individual refinery baseline under subpart I of this part before EPA has approved the baseline, provided that:

(i) A baseline petition has been submitted as required in paragraph (b) of this section;

(ii) EPA has made a provisional finding that the baseline petition is complete;

(iii) The foreign refiner has made the commitments required in paragraph (i) of this section;

(iv) The persons who will meet the independent third party and independent attest requirements for the foreign refinery have made the commitments required in paragraphs (f)(3)(iii) and (h)(7)(iii) of this section; and

(v) The foreign refiner has met the bond requirements of paragraph (k) of this section.

(2) In any case where a foreign refiner uses an individual refinery baseline before final approval under paragraph (r)(1) of this section, and the foreign refinery baseline values that ultimately are approved by EPA are more stringent than the early baseline values used by the foreign refiner, the foreign refiner shall recalculate its compliance, *ab initio*, using the baseline values approved by the EPA, and the foreign refiner shall be liable for any resulting violation of the motor vehicle highway diesel fuel requirements.

(s) *Additional requirements for petitions, reports and certificates.* Any petition for approval to produce diesel fuel subject to the diesel foreign refiner program, any alternative procedures under paragraph (p) of this section, any report or other submission required by paragraph (c), (f)(2), or (i) of this section, and any certification under paragraph (d)(3) of this section shall be—

(1) Submitted in accordance with procedures specified by the Administrator, including use of any forms that may be specified by the Administrator.

(2) Be signed by the president or owner of the foreign refiner company, or by that person's immediate designee, and shall contain the following declaration:

I hereby certify: (1) That I have actual authority to sign on behalf of and to bind [insert name of foreign refiner] with regard to all statements contained herein; (2) that I am aware that the information contained herein is being certified, or submitted to the United States Environmental Protection Agency, under the requirements of 40 CFR part 80, subpart I, and that the information is material for determining compliance under these regulations; and (3) that I have read and understand the information being certified or submitted, and this information is true, complete and correct to the best of my knowledge and belief after I have taken reasonable and appropriate steps to verify the accuracy thereof.

I affirm that I have read and understand the provisions of 40 CFR part 80, subpart I, including 40 CFR 80.620 apply to [insert name of foreign refiner]. Pursuant to Clean Air Act section 113(c) and 18 U.S.C. 1001, the penalty for furnishing false, incomplete or misleading information in this certification or submission is a fine of up to $10,000 U.S., and/or imprisonment for up to five years.

[66 FR 5136, Jan. 18, 2001, as amended at 69 FR 39208, June 29, 2004]

Subpart J—Gasoline Toxics

GENERAL INFORMATION

SOURCE: 66 FR 17263, Mar. 29, 2001, unless otherwise noted.

§§ 80.800–80.805 [Reserved]

§ 80.810 Who shall register with EPA under the gasoline toxics program?

(a) Refiners and importers who are registered by EPA under § 80.76 are deemed to be registered for purposes of this subpart.

(b) Refiners and importers subject to the standards in § 80.815 who are not registered by EPA under § 80.76 shall provide to EPA the information required by § 80.76 by October 1, 2001, or not later than three months in advance of the first date that such person produces or imports gasoline, whichever is later.

GASOLINE TOXICS PERFORMANCE REQUIREMENTS

§ 80.815 What are the gasoline toxics performance requirements for refiners and importers?

(a)(1) The gasoline toxics performance requirements of this subpart require that the annual average toxics value of a refinery or importer be compared to that refinery's or importer's compliance baseline, where compliance has been achieved if—

(i) For conventional gasoline, the annual average toxics value is less than or equal to the compliance baseline;

(ii) For reformulated gasoline and RBOB, combined, the annual average toxics value is greater than or equal to the compliance baseline.

(A) Refineries that only produce RBOB and importers that only import RBOB shall treat RBOB as reformulated gasoline for the purposes of determining compliance with the requirements of this subpart.

(B) Refineries that produce both RFG and RBOB and importers that import both RFG and RBOB must combine any RFG and RBOB qualities and volumes for the purposes of determining compliance with the requirements of this subpart.

(2) The requirements under this paragraph (a) shall be met by the importer for all imported gasoline, except gasoline imported as Certified Toxics-FRGAS under § 80.1030.

(b) The gasoline toxics requirements of this subpart apply separately for each of the following types of gasoline produced at a refinery or imported:

(1) Reformulated gasoline and RBOB, combined;

(2) Conventional gasoline.

(c) *Compliance baseline.* (1) The compliance baseline of a refinery or importer is determined in accordance with § 80.915 or § 80.855, as applicable.

(2) Refiners who have chosen, under subpart E of this part, to comply with the requirements of subpart E of this part on an aggregate basis, shall comply with the requirements of this subpart on the same aggregate basis.

(d) *Compliance determination.* (1)(i) The gasoline toxics performance requirements of this subpart apply to gasoline produced at a refinery or imported by an importer during each calendar year starting January 1, 2002. The averaging period is January 1 through December 31 of each year.

(ii)(A) Beginning January 1, 2011, or January 1, 2015 for small refiners approved under § 80.1340, the gasoline toxics performance requirements of this subpart shall apply only to gasoline that is not subject to the benzene standard of § 80.1230, pursuant to the provisions of § 80.1235.

(B) The gasoline toxics performance requirements of this subpart shall not apply to gasoline produced by a refinery approved under § 80.1334, pursuant to § 80.1334(c).

(2) The annual average toxics value is calculated in accordance with § 80.825.

(e) *Deficit carryforward.* (1) A refinery or importer creates a toxics deficit, separately for reformulated gasoline and conventional gasoline, for a given averaging period, when—

(i) For conventional gasoline, its annual average toxics value is greater than the compliance baseline;

(ii) For reformulated gasoline and RBOB, combined, the annual average toxics value is less than the compliance baseline.

(2) In the calendar year following the year the toxics deficit is created, the refinery or importer shall:

(i) Achieve compliance with the refinery or importer toxics performance requirement specified in paragraph (a) of this section; and

(ii) Generate additional toxics credits sufficient to offset the toxics deficit of the previous year.

(f) *Credit carryforward.* (1) A refinery or importer generates toxics credits, separately for reformulated gasoline and conventional gasoline, for a given averaging period, when—

(i) For conventional gasoline, its annual average toxics value is less than the compliance baseline;

(ii) For reformulated gasoline and RBOB, combined, the annual average toxics value is greater than the compliance baseline.

(2) Toxics credits may be used to offset a toxics deficit in the calendar year following the year the credits are generated, provided the following criteria are met:

(i) Reformulated gasoline toxics credits are only to be used to offset a reformulated gasoline toxics deficit; conventional gasoline credits are only to be used to offset a conventional gasoline toxics deficit.

(ii) A refiner only offsets a toxics deficit at a refinery with toxics credits generated by that refinery.

(iii) Credits generated on an aggregate basis may only be used to offset a deficit calculated on an aggregate basis.

(iv) Credits used to offset a deficit from the previous year may not also be carried forward to the following year. Credits in excess of those used to offset a deficit from the previous year may be used to offset a deficit in the following year.

(v) Only toxics credits generated under this subpart may be used to offset a toxics deficit created under this subpart.

[66 FR 17263, Mar. 29, 2001, as amended at 72 FR 8544, Feb. 26, 2007]

§ 80.820 What gasoline is subject to the toxics performance requirements of this subpart?

For the purpose of this subpart, all reformulated gasoline, conventional gasoline and RBOB, collectively called ''gasoline'' unless otherwise specified, is subject to the requirements under this subpart, as applicable, with the following exceptions:

(a) Gasoline that is used to fuel aircraft, racing vehicles or racing boats that are used only in sanctioned racing events, provided that:

(1) Product transfer documents associated with such gasoline, and any pump stand from which such gasoline

is dispensed, identify the gasoline either as gasoline that is restricted for use in aircraft, or as gasoline that is restricted for use in racing motor vehicles or racing boats that are used only in sanctioned racing events;

(2) The gasoline is completely segregated from all other gasoline throughout production, distribution and sale to the ultimate consumer; and

(3) The gasoline is not made available for use as motor vehicle gasoline, or dispensed for use in motor vehicles, except for motor vehicles used only in sanctioned racing events.

(b) Gasoline that is exported for sale outside the U.S.

(c) Gasoline designated as California gasoline under § 80.845, and used in California.

(d) Gasoline used in American Samoa, Guam and the Commonwealth of the Northern Mariana Islands.

(e) Gasoline exempt per § 80.995.

(f) Gasoline exempt per § 80.1000.

§ 80.825 How is the refinery or importer annual average toxics value determined?

(a) The refinery or importer annual average toxics value is calculated as follows:

$$T_a = \frac{\sum_{i=1}^{n} (V_i \times T_i)}{\sum_{i=1}^{n} V_i}$$

Where:

T_a = The refinery or importer annual average toxics value, as applicable.

V_i = The volume of applicable gasoline produced or imported in batch i.

T_i = The toxics value of batch i.

n = The number of batches of gasoline produced or imported during the averaging period.

i = Individual batch of gasoline produced or imported during the averaging period.

(b) The calculation specified in paragraph (a) of this section shall be made separately for each type of gasoline specified at § 80.815(b).

(c) The toxics value, T_i, of each batch of gasoline is determined using the Phase II Complex Model specified at § 80.45.

(1) The toxics value, T_i, of each batch of reformulated gasoline or RBOB, and the annual average toxics value, T_a, for reformulated gasoline and RBOB, combined, under this subpart are in percent reduction from the statutory baseline described in § 80.45(b) and volumes are in gallons.

(2) (i) The toxics value, T_i, of each batch of conventional gasoline, and the annual average toxics value, T_a, for conventional gasoline under this subpart are in milligrams per mile (mg/mile) and volumes are in gallons.

(ii) Any refiner for any refinery or importer that has received EPA approval of a petition submitted in accordance with the provisions of § 80.93(d) shall determine the toxics value, T_i, of each batch of conventional gasoline produced or imported for use in Alaska, and/or Hawaii, the Commonwealth of Puerto Rico, and the Virgin Islands in accordance with § 80.101(g)(1)(ii).

(d) All refinery or importer annual average toxics value calculations shall be conducted to two decimal places.

(e) A refiner or importer may include oxygenate added downstream from the refinery or import facility when calculating the toxics value, provided the following requirements are met:

(1) For oxygenate added to conventional gasoline, the refiner or importer shall comply with the requirements of § 80.101(d)(4)(ii).

(2) For oxygenate added to RBOB, the refiner or importer shall comply with the requirements of § 80.69(a).

(f) *Gasoline excluded.* Refiners and importers shall exclude from compliance calculations all of the following:

(1) Gasoline that was not produced at the refinery;

(2) In the case of an importer, gasoline that was imported as Certified Toxics-FRGAS under § 80.1030;

(3) Blending stocks transferred to others;

(4) Gasoline that has been included in the compliance calculations for another refinery or importer; and

(5) Gasoline exempted from standards under § 80.820.

[66 FR 17263, Mar. 29, 2001, as amended at 72 FR 60581, Oct. 25, 2007]

§ 80.830 What requirements apply to oxygenate blenders?

Oxygenate blenders who blend oxygenate into gasoline downstream of the refinery that produced the gasoline or the import facility where the gasoline was imported are not subject to the requirements of this subpart applicable to refiners for this gasoline.

§ 80.835 What requirements apply to butane blenders?

Butane blenders who blend butane into gasoline downstream of the refinery that produced the gasoline or the import facility where the gasoline was imported are not subject to the requirements of this subpart applicable to refiners for this gasoline.

§ 80.840 What requirements apply to transmix processors?

Any transmix processor who produces gasoline or gasoline blendstock from transmix, or recovers gasoline or gasoline blendstock from transmix through transmix processing under § 80.84 (c) shall include such gasoline or gasoline blendstock in the baseline and compliance calculations of this subpart to the same extent such gasoline or gasoline blendstock must be included in compliance calculations under subpart D of this part for reformulated gasoline and RBOB, and under subpart E of this part for conventional gasoline, according to the requirements specified in § 80.84(c).

[71 FR 31964, June 2, 2006]

§ 80.845 What requirements apply to California gasoline?

(a) *Definition.* For purposes of this subpart ''California gasoline'' means any gasoline designated by the refiner or importer as for use in California.

(b) *California gasoline exemption.* California gasoline that complies with all the requirements of this section is exempt from all other provisions of this subpart.

(c) *Requirements for California gasoline.* (1) Each batch of California gasoline shall be designated as such by its refiner or importer.

(2) [Reserved]

(3) Designated California gasoline must ultimately be used in the State of California and not used elsewhere.

(4) In the case of California gasoline produced outside the State of California, the transferors and transferees shall meet the product transfer document requirements under § 80.81(g).

(5) Gasoline that is ultimately used in any part of the United States outside of the State of California shall comply with the standards and requirements of this subpart, regardless of any designation as California gasoline.

§ 80.850 How is the compliance baseline determined?

(a) The compliance baseline to which annual average toxics values are compared according to § 80.815(a) is calculated according to the following equation:

$$T_{CBase} = \frac{T_{Base} \times V_{Base} + T_{Exist} \times V_{inc}}{V_{Base} + V_{inc}}$$

Where:

T_{CBase} = Compliance baseline toxics value.

T_{Base} = Baseline toxics value for the refinery or importer, calculated according to § 80.915(b)(1).

V_{Base} = Baseline volume for the refinery or importer, calculated according to § 80.915(b)(2).

T_{Exist} = Existing toxics standard, per paragraph (b) of this section.

V_{inc} = Volume of gasoline produced during the averaging period in excess of V_{Base}.

(b) The value of existing toxics standard, T_{Exist}, is equal to:

(1) 21.5 percent, for reformulated gasoline and RBOB, combined;

(2) The refinery's or importer's anti-dumping compliance baseline value for exhaust toxics, in mg/mi, per § 80.101(f), for conventional gasoline.

(c) Any refiner for any refinery or importer with an approved anti-dumping baseline under § 80.93(d) for gasoline produced or imported for use in Alaska, and/or Hawaii, the Commonwealth of Puerto Rico, and the Virgin Islands, and for which a conventional gasoline baseline toxics value for such gasoline can be determined according to § 80.915(b)(1), shall determine its compliance baseline applicable to such gasoline according to the following equation:

$$T_{CBase} = \frac{T_{Base} \times V_{Base} + T_{Exist} \times V_{Inc} + T_{SBase} \times V_{SBase} + T_{SExist} \times V_{SInc} + T_{WBase} \times V_{WBase} + T_{WExist} \times V_{WInc}}{V_{Base} + V_{Inc} + V_{SBase} + V_{SInc} + V_{WBase} + V_{WInc}}$$

Where:

T_{CBase} = Compliance baseline toxics value.

T_{Base} = Baseline toxics value for the refinery or importer, calculated according to § 80.915(b)(1) for all gasoline except gasoline produced or imported for use in Alaska, Hawaii, the Commonwealth of Puerto Rico, and the Virgin Islands.

V_{Base} = Baseline volume for the refinery or importer, calculated according to § 80.915(b)(2) for all gasoline except gasoline produced or imported for use in Alaska, Hawaii, the Commonwealth of Puerto Rico, and the Virgin Islands.

T_{Exist} = The refinery's or importer's anti-dumping compliance baseline value for exhaust toxics, in mg/mi, per § 80.101(f) for all gasoline except gasoline produced or imported for use in Alaska, Hawaii, the Commonwealth of Puerto Rico, and the Virgin Islands.

V_{Inc} = Volume of gasoline produced or imported, excluding the volume of gasoline produced or imported for use in Alaska, Hawaii, the Commonwealth of Puerto Rico, and the Virgin Islands during the averaging period, which is in excess of V_{Base}.

T_{SBase} = Baseline toxics value for the refinery or importer, calculated according to § 80.915(e)(2)(i) for gasoline produce or imported for use in Hawaii, the Commonwealth of Puerto Rico, and the Virgin Islands.

V_{SBase} = Baseline volume for the refinery or importer, calculated according to § 80.915(e)(2)(ii) for gasoline produce or imported for use in Hawaii, the Commonwealth of Puerto Rico, and the Virgin Islands.

T_{SExist} = The refinery's or importer's anti-dumping compliance baseline value for exhaust toxics, in mg/mi, per § 80.101(f) for gasoline produce or imported for use in Hawaii, the Commonwealth of Puerto Rico, and the Virgin Islands.

V_{SInc} = Volume of gasoline produced or imported for use in Hawaii, the Commonwealth of Puerto Rico, and the Virgin Islands during the averaging period which is in excess of V_{SBase}.

T_{WBase} = Baseline toxics value for the refinery or importer, calculated according to § 80.915(e)(1)(i) for gasoline produce or imported for use in Alaska.

V_{WBase} = Baseline volume for the refinery or importer, calculated according to § 80.915(e)(1)(ii) for gasoline produce or imported for use in Alaska.

T_{WExist} = The refinery's or importer's anti-dumping compliance baseline value for exhaust toxics, in mg/mi, per § 80.101(f) for gasoline produce or imported for use in Alaska.

V_{WInc} = Volume of gasoline produced or imported for use in Alaska during the averaging period which is in excess of V_{WBase}.

(d) If the refinery or importer produced less gasoline during the compliance period than its applicable baseline volume, the value of V_{inc}, V_{SInc} or V_{WInc}, as applicable, will be zero.

[66 FR 17263, Mar. 29, 2001, as amended at 72 FR 60581, Oct. 25, 2007]

§ 80.855 What is the compliance baseline for refineries or importers with insufficient data?

(a) A refinery or importer shall use the methodology specified in this section for determining a compliance baseline if it cannot determine an applicable toxics value for every batch of gasoline produced or imported for 12 or more consecutive months during January 1, 1998 through December 31, 2000.

(b)(1) A refinery or importer that cannot determine an applicable toxics value on every batch of gasoline produced or imported for 12 or more consecutive months during the period January 1, 1998 through December 31, 2000 or a refinery or importer that did not produce or import reformulated gasoline and/or RBOB (combined) or conventional gasoline or both during the period between January 1, 1998 and December 31, 2000, inclusive, shall have the following as its compliance baseline for the purposes of this subpart:

(i) For conventional gasoline, prior to January 1, 2006, 94.64 mg/mile; starting January 1, 2006, 97.38 mg/mile.

(ii) For reformulated gasoline, prior to January 1, 2006, 25.31 percent reduction from statutory baseline; starting January 1, 2006, 26.78 percent reduction from statutory baseline.

(2)(i) A refinery or importer that has an approved anti-dumping baseline under § 80.93(d) for gasoline produced or imported for use in Alaska, and that cannot determine an applicable toxics

value according to paragraph (b)(1) of this section, shall have the following as its compliance baseline for the purposes of this subpart: 110.72 mg/mile.

(ii) A refinery or importer that has an approved anti-dumping baseline under § 80.93(d) for gasoline produce or imported for use in Hawaii, the Commonwealth of Puerto Rico, and the Virgin Islands and that cannot determine an applicable toxics value according to paragraph (b)(1) of this section, shall have the following as its compliance baseline for the purposes of this subpart: 77.82 mg/mile.

(iii) The provisions of this paragraph (b)(2) shall apply to any refiner, for any refinery, or importer that received approval of a petition under § 80.93(d) prior to November 26, 2007 beginning with the 2008 annual averaging period.

(iv) Any new refiner or importer without a toxics baseline that produces or imports gasoline for use in Alaska, Hawaii, the Commonwealth of Puerto Rico or the Virgin Islands shall be subject to the applicable toxics default baseline under paragraph (b)(1) of this section unless the refiner or importer petitions for and receives approval of use of a seasonal baseline and seasonal Complex Model under § 80.93(d).

(c)(1) *Eligibility to petition.* A refiner who has been granted an alternative anti-dumping averaging period under § 80.101(k) may petition the Administrator to have the statutory baseline exhaust toxics emissions, Phase II value specified in § 80.91(c)(5)(iv) as its compliance baseline for the purposes of this subpart J for one or more of the years of the refiner's approved alternative anti-dumping averaging period.

(2) *Application process.* Applications must be submitted to the Administrator by January 1, 2004 to the following address: U.S. EPA—Attn: Anti-Dumping Compliance Period (6406J), 1200 Pennsylvania Avenue, NW., Washington, DC 20460 (certified mail/return receipt) or U.S. EPA—Attn: Anti-Dumping Compliance Period (6406J), Transportation & Regional Programs Division, 501 3rd Street, NW., Washington, DC 20001 (express mail/return receipt).

(3) *Contents of the application petition.* Each petition must include:

(i) A copy of the refinery's approval for an alternative averaging period under section 80.101(k).

(ii) A description of the hardships that make it infeasible, on a cost and/or technological basis, for the refinery to comply with the compliance baseline specified in paragraph (b) of this section.

(iii) A quarterly timeline, from the date of the application, indicating the expected exhaust toxics emissions performance of the refinery's conventional gasoline, and the reasons for any expected non-compliance with the compliance baseline specified in paragraph (b) of this section (for example, a particular gasoline blendstock-producing unit not yet installed). The timeline shall include the date by which the refinery will produce conventional gasoline that complies with the baseline specified in paragraph (b) of this section on an annual average basis.

(4) *Approval or disapproval of petitions.* (i) The Administrator may approve a petition if it includes information sufficient to demonstrate to the Administrator's satisfaction that cost and/or technological constraints make it infeasible for the refinery to comply with the baseline specified in paragraph (b) of this section. The Administrator will approve or deny a petition in writing within six months of receipt.

(ii)(A) Each approval will specify the date by which the refinery must comply with the baseline specified in paragraph (b) of this section. No petition approval shall allow for use of the statutory baseline exhaust toxics emissions, Phase II value as a refinery's compliance baseline under this subpart J beyond the last day of a refinery's alternative anti-dumping averaging period under § 80.101(k) or § 80.101(l).

(B) An approval may include any conditions or other requirements to which the approval is subject.

(5) *Effective date for petition.* (i) Beginning with the averaging period immediately following the end of the approved period under paragraph (c)(4) of this section, the compliance baseline for the purposes of this subpart J shall be as specified in paragraph (b) of this section.

(ii) Notwithstanding the requirement specified in paragraph (c)(5)(i) of this

section, if at any time the alternative compliance period approved under § 80.101(k) or § 80.101(l) ceases to apply, the approval granted under this paragraph (c) shall also cease to apply.

[68 FR 24309, May 6, 2003, as amended at 70 FR 58335, Oct. 6, 2005; 72 FR 60582, Oct. 25, 2007]

§§ 80.860–80.905 [Reserved]

BASELINE DETERMINATION

§ 80.910 How does a refiner or importer apply for a toxics baseline?

(a)(1) A refiner or importer shall submit an application to EPA which includes the information required under paragraph (c) of this section no later than June 30, 2001, or 3 months prior to the first introduction of gasoline into commerce from the refinery or by the importer, whichever is later.

(2) A refiner or importer shall submit an application to EPA for the purposes of this subpart simultaneously with the submission of a petition under § 80.93(d).

(b) The toxics baseline request shall be sent to: U.S. EPA, Attn: Toxics Program (6406J), 1200 Pennsylvania Ave., NW, Washington, DC 20460. For commercial (non-postal) delivery: U.S. EPA, Attn: Toxics Program, 501 3rd Street NW, Washington, DC 20001.

(c) The toxics baseline application shall include the following information:

(1) A listing of the names and addresses of all refineries owned by the company for which the refiner is applying for a toxics baseline, or the name and address of the importer applying for a toxics baseline.

(2) For each refinery and importer—

(i) The baseline toxics value for each type of gasoline, per § 80.815(b), calculated in accordance with § 80.915;

(ii) The baseline toxics volume for each type of gasoline, per § 80.815(b), calculated in accordance with § 80.915;

(iii) For those with insufficient data pursuant to § 80.855, a statement that the refinery's or importer's baseline toxics value is the default compliance baseline specified at § 80.855(b), and that its baseline toxics volume is zero.

(3) A letter signed by the president, chief operating or chief executive officer, of the company, or his/her delegate, stating that the information contained in the toxics baseline determination is true to the best of his/her knowledge.

(4) Name, address, phone number, facsimile number and E-mail address of a company contact person.

(5) The following information for each batch of gasoline produced or imported during the period 1998–2000, separately for each type of gasoline listed at § 80.815(b):

(i) Batch number assigned to the batch under § 80.65(d) or § 80.101(i);

(ii) Volume; and

(iii) Applicable toxics value determined as specified at § 80.915(c).

(d) Foreign refiners shall follow the procedures specified in § 80.1030(b) to establish individual toxics baseline values for a foreign refinery.

(e) By October 31, 2001, or 4 months after the submission date, whichever is later, EPA will notify the submitter of approval of its toxics baseline.

(f) If at any time the baseline submitted in accordance with the requirements of this section is determined to be incorrect, the corrected baseline applies ab initio and the annual average toxics requirements are deemed to be those applicable under the corrected information.

[66 FR 17263, Mar. 29, 2001, as amended at 72 FR 60582, Oct. 25, 2007]

§ 80.915 How are the baseline toxics value and baseline toxics volume determined?

(a)(1) A refinery or importer shall use the methodology specified in this section for determining a baseline toxics value if it can determine an applicable toxics value for every batch of gasoline produced or imported for 12 or more consecutive months during January 1, 1998 through December 31, 2000.

(2) The determination in paragraph (a)(1) of this section is made separately for each type of gasoline listed at § 80.815(b) produced or imported between January 1, 1998 and December 31, 2000, inclusive.

(3) All consecutive and non-consecutive batch toxics measurements between January 1, 1998 and December 31, 2000, inclusive, are to be included in the

baseline determination, unless the refinery or importer petitions EPA to exclude such data on the basis of data quality, per § 80.91(d)(6), and receives permission from EPA to exclude such data.

(b)(1) A refinery's or importer's baseline toxics value is calculated using the following equation:

$$T_{Base} = \frac{\sum_{i=1}^{n}(V_i \times T_i)}{\sum_{i=1}^{n} V_i} + M$$

Where:

T_{Base} = Baseline toxics value.
V_i = Volume of gasoline batch i produced or imported between January 1, 1998 and December 31, 2000, inclusive.
T_i = Toxics value of gasoline batch i produced or imported between January 1, 1998 and December 31, 2000, inclusive.
i = Individual batch of gasoline produced or imported between January 1, 1998 and December 31, 2000, inclusive.
n = Total number of batches of gasoline produced or imported between January 1, 1998 and December 31, 2000, inclusive.
M = Compliance margin.

(2) A refinery's or importer's baseline toxics volume is calculated using the following equation:

$$V_{base} = \frac{\sum_{i=1}^{n} V_i}{Y}$$

Where:

V_{base} = Baseline toxics volume.
V_i = Volume of gasoline batch i produced or imported between January 1, 1998 and December 31, 2000, inclusive.
i = Individual batch of gasoline produced or imported between January 1, 1998 and December 31, 2000, inclusive.
n = Total number of batches of gasoline produced or imported between January 1, 1998 and December 31, 2000, inclusive.
Y = Number of years between 1998 and 2000, inclusive, during some or all of which the refinery produced, or the importer imported, gasoline.

(c) The calculation specified in paragraph (b) of this section shall be made separately for each type of gasoline listed at § 80.815(b).

(d) The toxics value, T_i, of each batch of gasoline is determined using the Phase II Complex Model specified at § 80.45.

(1) The toxics value, T_i, of each batch of reformulated gasoline or RBOB, and the baseline toxics value, T_{Base}, for reformulated gasoline and RBOB, combined, under this subpart are in percent reduction from the statutory baseline defined in 40 CFR 80.45(b) and volumes are in gallons.

(2) The toxics value, T_i, of each batch of conventional gasoline, and the baseline toxics value, T_{Base}, for conventional gasoline under this subpart are in milligrams per mile (mg/mile) and volumes are in gallons.

(e)(1)(i) A refiner or importer which is approved for a petition submitted under § 80.910(a)(2) for gasoline produced or imported for use in Alaska shall calculate the applicable toxics baseline value using the following equation:

$$T_{WBase} = \frac{\sum_{i=1}^{n}(V_i \times T_i)}{\sum_{i=1}^{n} V_i} + M$$

Where:

T_{WBase} = Baseline toxics value for gasoline produced or imported for use in Alaska.
V_i = Volume of gasoline batch i produced or imported for use in Alaska between January 1, 1998 and December 31, 2000, inclusive.
T_i = Toxics value of gasoline batch i produced or imported for use in Alaska between January 1, 1998 and December 31, 2000, inclusive.
i = Individual batch of gasoline produced or imported for use in Alaska between January 1, 1998 and December 31, 2000, inclusive.
n = Total number of batches of gasoline produced or imported for use in Alaska between January 1, 1998 and December 31, 2000, inclusive.
M = Compliance margin.

(ii) The baseline volume associated with the baseline value calculated in paragraph (e)(1)(i) of this section shall be calculated using the methodology in paragraph (b)(2) of this section for the gasoline described in paragraph (e)(1)(i) of this section.

(2)(i) A refiner or importer which is approved for a petition submitted

under § 80.910(a)(2) for gasoline produced or imported for use in Hawaii, the Commonwealth of Puerto Rico, and the Virgin Islands shall calculate the applicable toxics baseline value using the following equation:

$$T_{SBase} = \frac{\sum_{i=1}^{n}(V_i \times T_i)}{\sum_{i=1}^{n} V_i} + M$$

Where:

T_{SBase} = Baseline toxics value for gasoline produced or imported for use in Hawaii, the Commonwealth of Puerto Rico, and the Virgin Islands.

V_i = Volume of gasoline batch i produced or imported for use in Hawaii, the Commonwealth of Puerto Rico, and the Virgin Islands between January 1, 1998 and December 31, 2000, inclusive.

T_i= Toxics value of gasoline batch i produced or imported for use in Hawaii, the Commonwealth of Puerto Rico, and the Virgin Islands between January 1, 1998 and December 31, 2000, inclusive.

$_i$ = Individual batch of gasoline produced or imported for use in Hawaii, the Commonwealth of Puerto Rico, and the Virgin Islands between January 1, 1998 and December 31, 2000, inclusive.

n = Total number of batches of gasoline produced or imported for use in Hawaii, the Commonwealth of Puerto Rico, and the Virgin Islands between January 1, 1998 and December 31, 2000, inclusive.

M = Compliance margin.

(ii) The baseline volume associated with the baseline value calculated in paragraph (e)(2)(i) of this section shall be calculated using the methodology in paragraph (b)(2) of this section for the gasoline described in paragraph (e)(2)(i) of this section.

(f) All refinery or importer baseline toxics value calculations shall be conducted to two decimal places.

(g) Any refinery for which oxygenate blended downstream was included in compliance calculations for 1998–2000, pursuant to § 80.65 or § 80.101(d)(4), shall include this oxygenate in the baseline calculations for toxics value under paragraph (a) of this section.

(h) *Baseline adjustment.* (1) A toxics baseline determined differently than described in paragraphs (a) through (e) of this section may be allowed upon petition by the refiner or importer and approval by the Administrator or designee. The petition must be included with the baseline submittal under § 80.910.

(2) A toxics baseline adjustment petition shall, at minimum, be accompanied by:

(i) Unadjusted and adjusted baseline fuel parameters, applicable toxics values, and volumes; and

(ii) A narrative describing how the circumstances during 1998–2000 materially affected the baseline toxics value calculated under paragraph (a) of this section. The narrative shall also describe and show the calculations, and the reasoning supporting the calculations, used to determine the adjusted values.

(i) The compliance margin, M, that will be added to the toxics baseline calculated according to paragraph (a) of this section shall be equal to:

(1) −0.7% for reformulated gasoline or RBOB;

(2) 2.5 mg/mile for conventional gasoline.

[66 FR 17263, Mar. 29, 2001, as amended at 72 FR 60582, Oct. 25, 2007]

§§ 80.920–80.980 [Reserved]

RECORDKEEPING AND REPORTING REQUIREMENTS

§ 80.985 What records shall be kept?

(a) The recordkeeping requirements specified under § 80.74 applicable to refiners and importers of reformulated gasoline, RBOB and/or conventional gasoline apply under this subpart, however, duplicate records are not required.

(b) *Additional records that refiners and importers shall keep.* Beginning January 1, 2002, any refiner for each of its refineries, and any importer for the gasoline it imports, shall keep records that include the following information:

(1) The calculations used to determine the applicable compliance baseline under § 80.915.

(2) The calculations used to determine compliance with the applicable toxics requirements per § 80.815.

(3) A copy of all reports submitted to EPA under § 80.990, however, duplicate records are not required.

(c) *Additional records importers shall keep.* Any importer shall keep records that identify and verify the source of each batch of Certified Toxics-FRGAS and Non-Certified Toxics-FRGAS imported and demonstrate compliance with the requirements for importers under § 80.1030(o).

(d) *Length of time records shall be kept.* The records required in this section shall be kept for five years from the date they were created.

(e) *Make records available to EPA.* On request by EPA the records required in paragraphs (a), (b) and (c) of this section shall be provided to the Administrator's authorized representative. For records that are electronically generated or maintained the equipment and software necessary to read the records shall be made available, or upon approval by EPA, electronic records shall be converted to paper documents which shall be provided to the Administrator's authorized representative.

§ 80.990 What are the toxics reporting requirements?

Beginning with the 2002 averaging period, and continuing for each averaging period thereafter, any refiner or importer shall submit to EPA the information required in this section, and such other information as EPA may require.

(a) *Refiner and importer annual reports.* Any refiner, for each of its refineries and/or aggregate(s) of refineries, and any importer for the gasoline it imports, shall:

(1) Include in its reformulated gasoline toxics emissions performance averaging report per § 80.75(e) the compliance baseline and incremental volume, V_{inc}, for its reformulated gasoline and RBOB, combined, per § 80.850.

(2) Include in its conventional gasoline report per § 80.105 the compliance baseline and incremental volume, V_{inc}, for its conventional gasoline per § 80.850.

(3) Exclude Certified Toxics-FRGAS under § 80.1030, if an importer.

(b) *Additional reporting requirements for importers.* Any importer shall report the following information for Toxics-FRGAS imported during the averaging period:

(1) The EPA refiner and refinery registration numbers of each foreign refiner and refinery where the Certified Toxics-FRGAS was produced; and

(2) The total gallons of Certified Toxics-FRGAS and Non-Certified Toxics-FRGAS imported from each foreign refiner and refinery.

EXEMPTIONS

§ 80.995 What if a refiner or importer is unable to produce gasoline conforming to the requirements of this subpart?

In appropriate extreme and unusual circumstances (e.g., natural disaster or Act of God) which are clearly outside the control of the refiner or importer and which could not have been avoided by the exercise of prudence, diligence, and due care, EPA may permit a refiner or importer, for a brief period, to not meet the requirements of this subpart, separately for reformulated gasoline (and RBOB, combined) and conventional gasoline, provided the refiner or importer meets all the criteria, requirements and conditions contained in § 80.73 (a) through (e).

§ 80.1000 What are the requirements for obtaining an exemption for gasoline used for research, development or testing purposes?

Gasoline used for research, development or testing purposes is exempt from the requirements of this subpart if it is exempted for these purposes under the reformulated and conventional gasoline programs, as applicable.

VIOLATION PROVISIONS

§ 80.1005 What acts are prohibited under the gasoline toxics program?

No person shall:

(a) *Averaging violation.* Produce or import gasoline subject to this subpart that does not comply with the applicable toxics requirement under § 80.815.

(b) *Causing an averaging use violation.* Cause another person to commit an act in violation of paragraph (a) of this section.

§ 80.1010 [Reserved]

§ 80.1015 Who is liable for violations under the gasoline toxics program?

(a) *Persons liable for violations of prohibited acts*—(1) *Averaging violation*. Any person who violates § 80.1005(a) is liable for the violation.

(2) *Causing an averaging violation*. Any person who causes another party to violate § 80.1005(a), is liable for a violation of § 80.1005(b).

(3) *Parent corporation liability*. Any parent corporation is liable for any violations of this subpart that are committed by any of its wholly-owned subsidiaries.

(b) *Persons liable for failure to meet other provisions of this subpart*. (1) Any person who fails to meet a provision of this subpart not addressed in paragraph (a) of this section is liable for a violation of that provision.

(2) Any person who causes another party to fail to meet a requirement of this subpart not addressed in paragraph (a) of this section, is liable for causing a violation of that provision.

§ 80.1020 [Reserved]

§ 80.1025 What penalties apply under this subpart?

(a) Any person liable for a violation under § 80.1015 is subject to civil penalties as specified in sections 205 and 211(d) of the Clean Air Act for every day of each such violation and the amount of economic benefit or savings resulting from each violation.

(b) Any person liable under § 80.1015(a) for a violation of the applicable toxics requirements or causing another party to violate the requirements during any averaging period, is subject to a separate day of violation for each and every day in the averaging period.

(c) Any person liable under § 80.1015(b) for failure to meet, or causing a failure to meet, a provision of this subpart is liable for a separate day of violation for each and every day such provision remains unfulfilled.

PROVISIONS FOR FOREIGN REFINERS WITH INDIVIDUAL TOXICS BASELINES

§ 80.1030 What are the requirements for gasoline produced at foreign refineries having individual refiner toxics baselines?

(a) *Definitions*. (1) A *foreign refinery* is a refinery that is located outside the United States, the Commonwealth of Puerto Rico, the Virgin Islands, Guam, American Samoa, and the Commonwealth of the Northern Mariana Islands (collectively referred to in this section as ''the United States'').

(2) A *foreign refiner* is a person who meets the definition of refiner under § 80.2(i) for a foreign refinery.

(3) *Toxics-FRGAS* means gasoline produced at a foreign refinery that has been assigned an individual refinery toxics baseline under § 80.915 and that is imported into the U.S.

(4) *Non-Toxics-FRGAS* means gasoline that is produced at a foreign refinery that has not been assigned an individual refinery toxics baseline, gasoline produced at a foreign refinery with an individual refinery toxics baseline that is not imported into the United States, and gasoline produced at a foreign refinery with an individual toxics baseline during a year when the foreign refiner has opted to not participate in the Toxics-FRGAS program under paragraph (c)(3) of this section.

(5) *Certified Toxics-FRGAS* means Toxics-FRGAS the foreign refiner intends to include in the foreign refinery's toxics compliance calculations under § 80.825, and does include in these compliance calculations when reported to EPA.

(6) *Non-Certified Toxics-FRGAS* means Toxics-FRGAS that is not Certified Toxics-FRGAS.

(b) *Baseline establishment*. Any foreign refiner may submit a petition to the Administrator for an individual refinery toxics baseline pursuant to § 80.915 for all gasoline that was produced at the foreign refinery and imported into the United States between January 1, 1998 and December 31, 2000.

(1) The refiner shall follow the procedures specified in §§ 80.91 through 80.93 to establish an anti-dumping baseline, if it does not already have such a baseline.

(2) In making determinations for foreign refinery baselines, EPA will consider all information supplied by a foreign refiner, and in addition may rely on any and all appropriate assumptions necessary to make such determinations.

(3)(i) Where a foreign refiner submits a petition that is incomplete or inadequate to establish an accurate toxics baseline, and the refiner fails to cure this defect after a request for more information, EPA will not assign an individual refinery toxics baseline.

(ii) If a foreign refiner does not already have an anti-dumping individual baseline per § 80.94, and if pursuant to § 80.94(b)(5) EPA does not assign an individual anti-dumping baseline, EPA will also not assign an individual refinery toxics baseline.

(c) *General requirements for foreign refiners with individual refinery toxics baselines.* A foreign refiner of a refinery that has been assigned an individual toxics baseline according to § 80.915 shall designate all gasoline produced at the foreign refinery that is exported to the United States as either Certified Toxics-FRGAS or as Non-Certified Toxics-FRGAS, except as provided in paragraph (c)(3) of this section.

(1) In the case of Certified Toxics-FRGAS, the foreign refiner shall meet all provisions that apply to refiners under this subpart J.

(2) In the case of Non-Certified Toxics-FRGAS, the foreign refiner shall meet all the following provisions, except the foreign refiner shall use the name Non-Certified Toxics-FRGAS instead of the names ''reformulated gasoline'' or ''RBOB'' wherever they appear in the following provisions:

(i) The designation requirements in this section.

(ii) The recordkeeping requirements under § 80.985.

(iii) The reporting requirements in § 80.990 and this section.

(iv) The product transfer document requirements in this section.

(v) The prohibitions in this section and § 80.1005.

(vi) The independent audit requirements under § 80.1035, paragraph (h) of this section, §§ 80.125 through 80.127, 80.128(a), (b), (c), (g) through (i), and 80.130.

(3)(i) Any foreign refiner that has been assigned an individual toxics baseline for a foreign refinery under § 80.915 may elect to classify no gasoline imported into the United States as Toxics-FRGAS, provided the foreign refiner notifies EPA of the election no later than November 1 of the prior calendar year.

(ii) An election under paragraph (c)(3)(i) of this section shall:

(A) Apply to an entire calendar year averaging period, and apply to all gasoline produced during the calendar year at the foreign refinery that is used in the United States; and

(B) Remain in effect for each succeeding calendar year averaging period, unless and until the foreign refiner notifies EPA of a termination of the election. The change in election shall take effect at the beginning of the next calendar year.

(4) In the case of information required under this section which would duplicate information submitted in accordance with § 80.94, the refiner may indicate that such information is also submitted in accordance with the requirements of this section. Duplicate submissions are not required.

(d) *Designation, product transfer documents, and foreign refiner certification.* (1) Any foreign refiner of a foreign refinery that has been assigned an individual toxics baseline shall designate each batch of Toxics-FRGAS as such at the time the gasoline is produced, unless the refiner has elected to classify no gasoline exported to the United States as Toxics-FRGAS under paragraph (c)(3)(i) of this section.

(2) On each occasion when any person transfers custody or title to any Toxics-FRGAS prior to its being imported into the United States, it shall include the following information as part of the product transfer document information in this section:

(i) Identification of the gasoline as Certified Toxics-FRGAS or as Non-Certified Toxics-FRGAS; and

(ii) The name and EPA refinery registration number of the refinery where the Toxics-FRGAS was produced.

(3) On each occasion when Toxics-FRGAS is loaded onto a vessel or other transportation mode for transport to the United States, the foreign refiner

shall prepare a written verification for each batch of the Toxics-FRGAS that meets the following requirements:

(i) The verification shall include the report of the independent third party under paragraph (f) of this section, and the following additional information:

(A) The name and EPA registration number of the refinery that produced the Toxics-FRGAS;

(B) The identification of the gasoline as Certified Toxics-FRGAS or Non-Certified Toxics-FRGAS;

(C) The volume of Toxics-FRGAS being transported, in gallons;

(D) In the case of Certified Toxics-FRGAS:

(*1*) The toxics value as determined under paragraph (f) of this section; and

(*2*) A declaration that the Toxics-FRGAS is being included in the compliance calculations under § 80.825 for the refinery that produced the Toxics-FRGAS.

(ii) The verification shall be made part of the product transfer documents for the Toxics-FRGAS.

(e) *Transfers of Toxics-FRGAS to non-United States markets.* The foreign refiner is responsible to ensure that all gasoline classified as Toxics-FRGAS is imported into the United States. A foreign refiner may remove the Toxics-FRGAS classification, and the gasoline need not be imported into the United States, but only if:

(1)(i) The foreign refiner excludes:

(A) The volume of gasoline from the refinery's compliance calculations under § 80.825; and

(B) In the case of Certified Toxics-FRGAS, the volume and toxics value of the gasoline from the compliance calculations under § 80.825.

(ii) The exclusions under paragraph (e)(1)(i) of this section shall be on the basis of the toxics value and volumes determined under paragraph (f) of this section; and

(2) The foreign refiner obtains sufficient evidence in the form of documentation that the gasoline was not imported into the United States.

(f) *Load port independent sampling, testing and refinery identification.* (1) On each occasion Toxics-FRGAS is loaded onto a vessel for transport to the United States a foreign refiner shall have an independent third party:

(i) Inspect the vessel prior to loading and determine the volume of any tank bottoms;

(ii) Determine the volume of Toxics-FRGAS loaded onto the vessel (exclusive of any tank bottoms present before vessel loading);

(iii) Obtain the EPA-assigned registration number of the foreign refinery;

(iv) Determine the name and country of registration of the vessel used to transport the Toxics-FRGAS to the United States; and

(v) Determine the date and time the vessel departs the port serving the foreign refinery.

(2) On each occasion Certified Toxics-FRGAS is loaded onto a vessel for transport to the United States a foreign refiner shall have an independent third party:

(i) Collect a representative sample of the Certified Toxics-FRGAS from each vessel compartment subsequent to loading on the vessel and prior to departure of the vessel from the port serving the foreign refinery;

(ii) Prepare a volume-weighted vessel composite sample from the compartment samples, and determine the value for toxics using the methodology specified in § 80.730 by:

(A) The third party analyzing the sample; or

(B) The third party observing the foreign refiner analyze the sample;

(iii) Review original documents that reflect movement and storage of the Certified Toxics-FRGAS from the refinery to the load port, and from this review determine:

(A) The refinery at which the Toxics-FRGAS was produced; and

(B) That the Toxics-FRGAS remained segregated from:

(*1*) Non-Toxics-FRGAS and Non-Certified Toxics-FRGAS; and

(2) Other Certified Toxics-FRGAS produced at a different refinery.

(3) The independent third party shall submit a report:

(i) To the foreign refiner containing the information required under paragraphs (f)(1) and (2) of this section, to accompany the product transfer documents for the vessel; and

(ii) To the Administrator containing the information required under paragraphs (f)(1) and (2) of this section, within thirty days following the date of the independent third party's inspection. This report shall include a description of the method used to determine the identity of the refinery at which the gasoline was produced, assurance that the gasoline remained segregated as specified in paragraph (n)(1) of this section, and a description of the gasoline's movement and storage between production at the source refinery and vessel loading.

(4) The independent third party shall:

(i) Be approved in advance by EPA, based on a demonstration of ability to perform the procedures required in this paragraph (f);

(ii) Be independent under the criteria specified in § 80.65(e)(2)(iii); and

(iii) Sign a commitment that contains the provisions specified in paragraph (i) of this section with regard to activities, facilities and documents relevant to compliance with the requirements of this paragraph (f).

(g) *Comparison of load port and port of entry testing.* (1)(i) Except as described in paragraph (g)(1)(ii) of this section, any foreign refiner and any United States importer of Certified Toxics-FRGAS shall compare the results from the load port testing under paragraph (f) of this section, with the port of entry testing as reported under paragraph (o) of this section, for the volume of gasoline and the toxics value.

(ii) Where a vessel transporting Certified Toxics-FRGAS off loads this gasoline at more than one United States port of entry, and the conditions of paragraph (g)(2)(i) of this section are met at the first United States port of entry, the requirements of paragraph (g)(2) of this section do not apply at subsequent ports of entry if the United States importer obtains a certification from the vessel owner, that meets the requirements of paragraph (s) of this section, that the vessel has not loaded any gasoline or blendstock between the first United States port of entry and the subsequent port of entry.

(2)(i) The requirements of this paragraph (g)(2) apply if:

(A) The temperature-corrected volumes determined at the port of entry and at the load port differ by more than one percent; or

(B) The toxics value determined at the port of entry is higher than the toxics value determined at the load port, and the amount of this difference is greater than the reproducibility amount specified for the port of entry test result by the American Society of Testing and Materials (ASTM).

(ii) The United States importer and the foreign refiner shall treat the gasoline as Non-Certified Toxics-FRGAS, and the foreign refiner shall exclude the gasoline volume and properties from its gasoline toxics compliance calculations under § 80.825.

(h) *Attest requirements.* The following additional procedures shall be carried out by any foreign refiner of Toxics-FRGAS as part of the applicable attest engagement for each foreign refinery under § 80.1035:

(1) The inventory reconciliation analysis under § 80.128(b) and the tender analysis under § 80.128(c) shall include Non-Toxics-FRGAS in addition to the gasoline types listed in § 80.128(b) and (c).

(2) Obtain separate listings of all tenders of Certified Toxics-FRGAS, and of Non-Certified Toxics-FRGAS. Agree the total volume of tenders from the listings to the gasoline inventory reconciliation analysis in § 80.128(b), and to the volumes determined by the third party under paragraph (f)(1) of this section.

(3) For each tender under paragraph (h)(2) of this section where the gasoline is loaded onto a marine vessel, report as a finding the name and country of registration of each vessel, and the volumes of Toxics-FRGAS loaded onto each vessel.

(4) Select a sample from the list of vessels identified in paragraph (h)(3) of this section used to transport Certified Toxics-FRGAS, in accordance with the guidelines in § 80.127, and for each vessel selected perform the following:

(i) Obtain the report of the independent third party, under paragraph (f) of this section, and of the United States importer under paragraph (o) of this section.

(A) Agree the information in these reports with regard to vessel identification, gasoline volumes and test results.

(B) Identify, and report as a finding, each occasion the load port and port of entry parameter and volume results differ by more than the amounts allowed in paragraph (g) of this section, and determine whether the foreign refiner adjusted its refinery calculations as required in paragraph (g) of this section.

(ii) Obtain the documents used by the independent third party to determine transportation and storage of the Certified Toxics-FRGAS from the refinery to the load port, under paragraph (f) of this section. Obtain tank activity records for any storage tank where the Certified Toxics-FRGAS is stored, and pipeline activity records for any pipeline used to transport the Certified Toxics-FRGAS, prior to being loaded onto the vessel. Use these records to determine whether the Certified Toxics-FRGAS was produced at the refinery that is the subject of the attest engagement, and whether the Certified Toxics-FRGAS was mixed with any Non-Certified Toxics-FRGAS, Non-Toxics-FRGAS, or any Certified Toxics-FRGAS produced at a different refinery.

(5) Select a sample from the list of vessels identified in paragraph (h)(3) of this section used to transport Certified and Non-Certified Toxics-FRGAS, in accordance with the guidelines in § 80.127, and for each vessel selected perform the following:

(i) Obtain a commercial document of general circulation that lists vessel arrivals and departures, and that includes the port and date of departure of the vessel, and the port of entry and date of arrival of the vessel.

(ii) Agree the vessel's departure and arrival locations and dates from the independent third party and United States importer reports to the information contained in the commercial document.

(6) Obtain separate listings of all tenders of Non-Toxics-FRGAS, and perform the following:

(i) Agree the total volume of tenders from the listings to the gasoline inventory reconciliation analysis in § 80.128(b).

(ii) Obtain a separate listing of the tenders under this paragraph (h)(6) where the gasoline is loaded onto a marine vessel. Select a sample from this listing in accordance with the guidelines in § 80.127, and obtain a commercial document of general circulation that lists vessel arrivals and departures, and that includes the port and date of departure and the ports and dates where the gasoline was off loaded for the selected vessels. Determine and report as a finding the country where the gasoline was off loaded for each vessel selected.

(7) In order to complete the requirements of this paragraph (h) an auditor shall:

(i) Be independent of the foreign refiner;

(ii) Be licensed as a Certified Public Accountant in the United States and a citizen of the United States, or be approved in advance by EPA based on a demonstration of ability to perform the procedures required in §§ 80.125 through 80.130 and this paragraph (h); and

(iii) Sign a commitment that contains the provisions specified in paragraph (i) of this section with regard to activities and documents relevant to compliance with the requirements of §§ 80.125 through 80.130, § 80.1035 and this paragraph (h).

(i) *Foreign refiner commitments.* Any foreign refiner shall commit to and comply with the provisions contained in this paragraph (i) as a condition to being assigned an individual refinery toxics baseline.

(1) Any United States Environmental Protection Agency inspector or auditor will be given full, complete and immediate access to conduct inspections and audits of the foreign refinery.

(i) Inspections and audits may be either announced in advance by EPA, or unannounced.

(ii) Access will be provided to any location where:

(A) Gasoline is produced;

(B) Documents related to refinery operations are kept;

(C) Gasoline or blendstock samples are tested or stored; and

(D) Toxics-FRGAS is stored or transported between the foreign refinery and the United States, including storage tanks, vessels and pipelines.

(iii) Inspections and audits may be by EPA employees or contractors to EPA.

(iv) Any documents requested that are related to matters covered by inspections and audits will be provided to an EPA inspector or auditor on request.

(v) Inspections and audits by EPA may include review and copying of any documents related to:

(A) Refinery baseline establishment, including the volume and toxics value, and transfers of title or custody, of any gasoline or blendstocks, whether Toxics-FRGAS or Non-toxics-FRGAS, produced at the foreign refinery during the period January 1, 1998 through the date of the refinery baseline petition or through the date of the inspection or audit if a baseline petition has not been approved, and any work papers related to refinery baseline establishment;

(B) The volume and toxics value of Toxics-FRGAS;

(C) The proper classification of gasoline as being Toxics-FRGAS or as not being Toxics-FRGAS, or as Certified Toxics-FRGAS or as Non-Certified Toxics-FRGAS;

(D) Transfers of title or custody to Toxics-FRGAS;

(E) Sampling and testing of Toxics-FRGAS;

(F) Work performed and reports prepared by independent third parties and by independent auditors under the requirements of this section and § 80.1035 including work papers; and

(G) Reports prepared for submission to EPA, and any work papers related to such reports.

(vi) Inspections and audits by EPA may include taking samples of gasoline or blendstock, and interviewing employees.

(vii) Any employee of the foreign refiner will be made available for interview by the EPA inspector or auditor, on request, within a reasonable time period.

(viii) English language translations of any documents will be provided to an EPA inspector or auditor, on request, within 10 working days.

(ix) English language interpreters will be provided to accompany EPA inspectors and auditors, on request.

(2) An agent for service of process located in the District of Columbia will be named, and service on this agent constitutes service on and personal and subject matter jurisdiction in the United States over the foreign refiner or any employee of the foreign refiner for any action by EPA or otherwise by the United States related to the requirements of this subpart J.

(3) A foreign refiner shall be subject to civil liability for violations of this section, sections 114, 202(l), 211, and 301(a) of the Clean Air Act, as amended (42 U.S.C. 7414, 7521(l), 7545 and 7601(a)), and all other applicable laws or regulations and shall be subject to the provisions thereof. The Administrator may assess a penalty against a foreign refiner for any violation of this section by a foreign refiner, in the manner set forth in sections 205(c) of the CAA, 42 U.S.C. 7524(c) or commence a civil action against a foreign refiner to assess and recover a civil penalty in the manner set forth in section 205(b) of the CAA, 42 U.S.C. 7524(b). A FR shall be subject to criminal liability for violations of this section, section 113(c)(2) of the CAA, 42 U.S.C. 7413(c)(2), 18 U.S.C. 1001 and all other applicable provisions and shall be subject to the provisions thereof.

(4) United States substantive and procedural laws shall apply to any civil or criminal enforcement action against the foreign refiner or any employee of the foreign refiner related to the provisions of this section.

(5) Submitting a petition for an individual refinery toxics baseline, producing and exporting gasoline under an individual refinery toxics baseline, and all other actions to comply with the requirements of this subpart J relating to the establishment and use of an individual refinery toxics baseline constitute actions or activities that satisfy the provisions of 28 U.S.C. 1605(a)(2), but solely with respect to actions instituted against the foreign refiner, its agents and employees in any court or other tribunal in the United States for conduct that violates the requirements applicable to the foreign refiner under this subpart J, including conduct that violates Title 18 U.S.C. section 1001 and Clean Air Act section 113(c)(2).

(6) The foreign refiner, or its agents or employees, will not seek to detain or to impose civil or criminal remedies

against EPA inspectors or auditors, whether EPA employees or EPA contractors, for actions performed within the scope of EPA employment related to the provisions of this section.

(7) The commitment required by this paragraph (i) shall be signed by the owner or president of the foreign refiner business.

(8) In any case where Toxics-FRGAS produced at a foreign refinery is stored or transported by another company between the refinery and the vessel that transports the Toxics-FRGAS to the United States, the foreign refiner shall obtain from each such other company a commitment that meets the requirements specified in paragraphs (i)(1) through (7) of this section, and these commitments shall be included in the foreign refiner's baseline petition.

(j) *Sovereign immunity*. By submitting a petition for an individual foreign refinery baseline under this section, or by producing and exporting gasoline to the United States under an individual refinery toxics baseline under this section, the foreign refiner, its agents and employees, without exception, become subject to the full operation of the administrative and judicial enforcement powers and provisions of the United States without limitation based on sovereign immunity, with respect to actions instituted against the foreign refiner, its agents and employees in any court or other tribunal in the United States for conduct that violates the requirements applicable to the foreign refiner under this subpart J, including conduct that violates Title 18 U.S.C. section 1001 and Clean Air Act section 113(c)(2).

(k) *Bond posting*. Any foreign refiner shall meet the requirements of this paragraph (k) as a condition to being assigned an individual refinery toxics baseline.

(1) The foreign refiner shall annually post a bond of the amount calculated using the following equation:

$$\text{Bond} = G \times \$\,0.01 - \text{Bond}_{CG}$$

Where:

Bond = amount of the bond in U. S. dollars.

G = the largest volume of gasoline produced at the foreign refinery and exported to the United States, in gallons, during a single calendar year among the five preceding calendar years.

Bond_{CG} = amount of bond currently posted by the refinery pursuant to § 80.94.

(2) Bonds shall be posted by:

(i) Paying the amount of the bond to the Treasurer of the United States;

(ii) Obtaining a bond in the proper amount from a third party surety agent that is payable to satisfy United States administrative or judicial judgments against the foreign refiner, provided EPA agrees in advance as to the third party and the nature of the surety agreement; or

(iii) An alternative commitment that results in assets of an appropriate liquidity and value being readily available to the United States, provided EPA agrees in advance as to the alternative commitment.

(3) If the bond amount for a foreign refinery increases, the foreign refiner shall increase the bond to cover the shortfall within 90 days of the date the bond amount changes. If the bond amount decreases, the foreign refiner may reduce the amount of the bond beginning 90 days after the date the bond amount changes.

(4) Bonds posted under this paragraph (k) shall:

(i) Be used to satisfy any judicial or administrative judgment, order, assessment or payment under a judicial or administrative settlement agreement that results from an administrative or judicial enforcement action for conduct in violation of this subpart J, including where such conduct violates Title 18 U.S.C. section 1001 and Clean Air Act section 113(c)(2);

(ii) Be provided by a corporate surety that is listed in the United States Department of Treasury Circular 570 ''Companies Holding Certificates of Authority as Acceptable Sureties on Federal Bonds'; and

(iii) Include a commitment that the bond will remain in effect for at least five (5) years following the end of latest averaging period that the foreign refiner produces gasoline pursuant to the requirements of this subpart J.

(5) On any occasion a foreign refiner bond is used to satisfy any judgment or other obligation, the foreign refiner shall increase the bond to cover the amount used within 90 days of the date the bond is used.

(6) The bond is used for payment of, not in lieu of, any obligation arising under any judgment, order, assessment or settlement agreement. Nothing herein is intended to waive any portion of any obligation except what portion is actually paid by use of funds from the bond.

(l) [Reserved]

(m) *English language reports.* Any report or other document submitted to EPA by a foreign refiner shall be in English language, or shall include an English language translation.

(n) *Prohibitions.* (1) No person may combine Certified Toxics-FRGAS with any Non-Certified Toxics-FRGAS or Non-Toxics-FRGAS, and no person may combine Certified Toxics-FRGAS with any Certified Toxics-FRGAS produced at a different refinery, until the importer has met all the requirements of paragraph (o) of this section, except as provided in paragraph (e) of this section.

(2) No foreign refiner or other person may cause another person to commit an action prohibited in paragraph (n)(1) of this section, or that otherwise violates the requirements of this section.

(o) *United States importer requirements.* Any United States importer shall meet the following requirements:

(1) Each batch of imported gasoline shall be classified by the importer as being Toxics-FRGAS or as Non-Toxics-FRGAS, and each batch classified as Toxics-FRGAS shall be further classified as Certified Toxics-FRGAS or as Non-Certified Toxics-FRGAS.

(2) Gasoline shall be classified as Certified Toxics-FRGAS or as Non-Certified Toxics-FRGAS according to the designation by the foreign refiner if this designation is supported by product transfer documents prepared by the foreign refiner as required in paragraph (d) of this section, unless the gasoline is classified as Non-Certified Toxics-FRGAS under paragraph (g) of this section.

(3) For each gasoline batch classified as Toxics-FRGAS, any United States importer shall perform the following procedures:

(i) In the case of both Certified and Non-Certified Toxics-FRGAS, have an independent third party:

(A) Determine the volume of gasoline in the vessel;

(B) Use the foreign refiner's Toxics-FRGAS certification to determine the name and EPA-assigned registration number of the foreign refinery that produced the Toxics-FRGAS;

(C) Determine the name and country of registration of the vessel used to transport the Toxics-FRGAS to the United States; and

(D) Determine the date and time the vessel arrives at the United States port of entry.

(ii) In the case of Certified Toxics-FRGAS, have an independent third party:

(A) Collect a representative sample from each vessel compartment subsequent to the vessel's arrival at the United States port of entry and prior to off loading any gasoline from the vessel;

(B) Prepare a volume-weighted vessel composite sample from the compartment samples; and

(C) Determine the toxics value using the methodologies specified in § 80.730, by:

(*1*) The third party analyzing the sample; or

(*2*) The third party observing the importer analyze the sample.

(4) Any importer shall submit reports within thirty days following the date any vessel transporting Toxics-FRGAS arrives at the United States port of entry:

(i) To the Administrator containing the information determined under paragraph (o)(3) of this section; and

(ii) To the foreign refiner containing the information determined under paragraph (o)(3)(ii) of this section.

(5) Any United States importer shall meet the requirements specified in § 80.815 for any imported gasoline that is not classified as Certified Toxics-FRGAS under paragraph (o)(2) of this section.

(p) *Truck Imports of Certified Toxics-FRGAS produced at a Refinery* (1) Any refiner whose Certified Toxics-FRGAS is transported into the United States by truck may petition EPA to use alternative procedures to meet the following requirements:

(i) Certification under paragraph (d)(5) of this section;

(ii) Load port and port of entry sampling and testing under paragraphs (f) and (g) of this section;

(iii) Attest under paragraph (h) of this section; and

(iv) Importer testing under paragraph (o)(3) of this section.

(2) These alternative procedures shall ensure Certified Toxics-FRGAS remains segregated from Non-Certified Toxics-FRGAS and from Non-Toxics-FRGAS until it is imported into the United States. The petition will be evaluated based on whether it adequately addresses the following:

(i) Provisions for monitoring pipeline shipments, if applicable, from the refinery, that ensure segregation of Certified Toxics-FRGAS from that refinery from all other gasoline;

(ii) Contracts with any terminals and/or pipelines that receive and/or transport Certified Toxics-FRGAS, that prohibit the commingling of Certified Toxics-FRGAS with any of the following:

(A) Other Certified Toxics-FRGAS from other refineries.

(B) All Non-Certified Toxics-FRGAS.

(C) All Non-Toxics-FRGAS;

(iii) Procedures for obtaining and reviewing truck loading records and United States import documents for Certified Toxics-FRGAS to ensure that such gasoline is only loaded into trucks making deliveries to the United States;

(iv) Attest procedures to be conducted annually by an independent third party that review loading records and import documents based on volume reconciliation, or other criteria, to confirm that all Certified Toxics-FRGAS remains segregated throughout the distribution system and is only loaded into trucks for import into the United States.

(3) The petition required by this section shall be submitted to EPA along with the application for small refiner status and individual refinery toxics baseline and standards under § 80.240 and this section.

(q) *Withdrawal or suspension of a foreign refinery's baseline.* EPA may withdraw or suspend a baseline that has been assigned to a foreign refinery where:

(1) A foreign refiner fails to meet any requirement of this section;

(2) A foreign government fails to allow EPA inspections as provided in paragraph (i)(1) of this section;

(3) A foreign refiner asserts a claim of, or a right to claim, sovereign immunity in an action to enforce the requirements in this subpart J; or

(4) A foreign refiner fails to pay a civil or criminal penalty that is not satisfied using the foreign refiner bond specified in paragraph (k) of this section.

(r) *Early use of a foreign refinery baseline.* (1) A foreign refiner may begin using an individual refinery baseline before EPA has approved the baseline, provided that:

(i) A baseline petition has been submitted as required in paragraph (b) of this section;

(ii) EPA has made a provisional finding that the baseline petition is complete;

(iii) The foreign refiner has made the commitments required in paragraph (i) of this section;

(iv) The persons who will meet the independent third party and independent attest requirements for the foreign refinery have made the commitments required in paragraphs (f)(3)(iii) and (h)(7)(iii) of this section; and

(v) The foreign refiner has met the bond requirements of paragraph (k) of this section.

(2) In any case where a foreign refiner uses an individual refinery baseline before final approval under paragraph (r)(1) of this section, and the foreign refinery baseline values that ultimately are approved by EPA are more stringent than the early baseline values used by the foreign refiner, the foreign refiner shall recalculate its compliance, ab initio, using the baseline values approved by EPA, and the foreign refiner shall be liable for any resulting violation of the gasoline toxics requirements.

(s) *Additional requirements for petitions, reports and certificates.* Any petition for a refinery baseline under § 80.915, any alternative procedures under paragraph (r) of this section, any report or other submission required by

paragraph (c), (f)(2), or (i) of this section, and any certification under paragraph (d)(3) of this section shall be:

(1) Submitted in accordance with procedures specified by the Administrator, including use of any forms that may be specified by the Administrator.

(2) Be signed by the president or owner of the foreign refiner company, or by that person's immediate designee, and shall contain the following declaration:

I hereby certify: (1) That I have actual authority to sign on behalf of and to bind [insert name of foreign refiner] with regard to all statements contained herein; (2) that I am aware that the information contained herein is being certified, or submitted to the United States Environmental Protection Agency, under the requirements of 40 CFR Part 80, subpart J, and that the information is material for determining compliance under these regulations; and (3) that I have read and understand the information being certified or submitted, and this information is true, complete and correct to the best of my knowledge and belief after I have taken reasonable and appropriate steps to verify the accuracy thereof.

I affirm that I have read and understand the provisions of 40 CFR Part 80, subpart J, including 40 CFR 80.1030 [insert name of foreign refiner]. Pursuant to Clean Air Act section 113(c) and Title 18, United States Code, section 1001, the penalty for furnishing false, incomplete or misleading information in this certification or submission is a fine of up to $10,000, and/or imprisonment for up to five years.

ATTEST ENGAGEMENTS

§ 80.1035 What are the attest engagement requirements for gasoline toxics compliance applicable to refiners and importers?

In addition to the requirements for attest engagements that apply to refiners and importers under §§ 80.125 through 80.130, and § 80.1030, the attest engagements for refiners and importers applicable to this subpart J shall include the following procedures and requirements each year, which should be applied separately to reformulated gasoline (and RBOB, combined) and conventional gasoline:

(a) Obtain the EPA toxics baseline approval letter for the refinery to determine the refinery's applicable baseline toxics value and baseline toxics volume under § 80.915.

(b) Obtain a written representation from the company representative stating the toxics value(s) that the company used as its baseline(s) and agree that number to paragraph (a) of this section.

(c) Obtain and read a copy of the refinery's or importer's annual toxics reports per §§ 1A80.75(e) and 80.105 filed with EPA for the year to determine the compliance baseline and incremental volume.

(d) Agree the yearly volume of gasoline reported to EPA in the toxics reports with the inventory reconciliation analysis under § 80.128.

(e) Calculate the annual average toxics value level for each type of gasoline specified at § 80.815(b) and agree the applicable values with the values reported to EPA.

(f) Calculate the difference between the yearly volume of gasoline reported to EPA and the baseline volume, if applicable, to determine the yearly incremental volume and agree that value with the value reported to EPA.

(g) Calculate the compliance baseline per § 80.850, and agree that value with the value reported to EPA.

(h) Beginning January 1, 2011, or January 1, 2015 for small refiners approved per § 80.1340, the requirements of this section shall apply only to gasoline that is not subject to the benzene standard of § 80.1230, pursuant to the provisions of § 80.1235.

[66 FR 17263, Mar. 29, 2001, as amended at 72 FR 8544, Feb. 26, 2007]

§ 80.1040 [Reserved]

ADDITIONAL RULEMAKING

§ 80.1045 What additional rulemaking will EPA conduct?

No later than July 1, 2003, the Administrator shall propose any requirements to control hazardous air pollutants from motor vehicles and motor vehicle fuels that the Administrator determines are appropriate pursuant to section 202(l)(2) of the Act. The Administrator will take final action on such proposal no later than July 1, 2004. During this rulemaking, EPA also intends to evaluate emissions and potential strategies relating to hazardous air

pollutants from nonroad engines and vehicles.

Subpart K—Renewable Fuel Standard

§ 80.1100 How is the statutory default requirement for 2006 implemented?

(a) *Definitions.* For calendar year 2006, the definitions of section 80.2 and the following additional definitions apply to this section.

(1) *Renewable fuel.* (i) *Renewable fuel* means motor vehicle fuel that is used to replace or reduce the quantity of fossil fuel present in a fuel mixture used to operate a motor vehicle, and which:

(A) Is produced from grain, starch, oil seeds, vegetable, animal, or fish materials including fats, greases, and oils, sugarcane, sugar beets, sugar components, tobacco, potatoes, or other biomass; or

(B) Is natural gas produced from a biogas source, including a landfill, sewage waste treatment plant, feedlot, or other place where decaying organic material is found.

(ii) The term ''renewable fuel'' includes cellulosic biomass ethanol, waste derived ethanol, biodiesel, and any blending components derived from renewable fuel.

(2) *Cellulosic biomass ethanol* means ethanol derived from any lignocellulosic or hemicellulosic matter that is available on a renewable or recurring basis, including dedicated energy crops and trees, wood and wood residues, plants, grasses, agricultural residues, fibers, animal wastes and other waste materials, and municipal solid waste. The term also includes any ethanol produced in facilities where animal wastes or other waste materials are digested or otherwise used to displace 90 percent or more of the fossil fuel normally used in the production of ethanol.

(3) *Waste derived ethanol* means ethanol derived from animal wastes, including poultry fats and poultry wastes, and other waste materials, or municipal solid waste.

(4) *Small refinery* means a refinery for which the average aggregate daily crude oil throughput for a calendar year (as determined by dividing the aggregate throughput for the calendar year by the number of days in the calendar year) does not exceed 75,000 barrels.

(5) *Biodiesel* means a diesel fuel substitute produced from nonpetroleum renewable resources that meets the registration requirements for fuels and fuel additives established by the Environmental Protection Agency under section 211 of the Clean Air Act. It includes biodiesel derived from animal wastes (including poultry fats and poultry wastes) and other waste materials, or biodiesel derived from municipal solid waste and sludges and oils derived from wastewater and the treatment of wastewater.

(b) *Renewable Fuel Standard for 2006.* The percentage of renewable fuel in the total volume of gasoline sold or dispensed to consumers in 2006 in the United States shall be a minimum of 2.78 percent on an annual average volume basis.

(c) *Responsible parties.* Parties collectively responsible for attainment of the standard in paragraph (b) of this section are refiners (including blenders) and importers of gasoline. However, a party that is a refiner only because he owns or operates a small refinery is exempt from this responsibility.

(d) *EPA determination of attainment.* EPA will determine after the close of 2006 whether or not the requirement in paragraph (b) of this section has been met. EPA will base this determination on information routinely published by the Energy Information Administration on the annual domestic volume of gasoline sold or dispensed to U.S. consumers and of ethanol produced for use in such gasoline, supplemented by readily available information concerning the use in motor fuel of other renewable fuels such as cellulosic biomass ethanol, waste derived ethanol, biodiesel, and other non-ethanol renewable fuels.

(1) The renewable fuel volume will equal the sum of all renewable fuel volumes used in motor fuel, provided that:

(i) One gallon of cellulosic biomass ethanol or waste derived ethanol shall be considered to be the equivalent of 2.5 gallons of renewable fuel; and

(ii) Only the renewable fuel portion of blending components derived from

renewable fuel shall be counted towards the renewable fuel volume.

(2) If the nationwide average volume percent of renewable fuel in gasoline in 2006 is equal to or greater than the standard in paragraph (b) of this section, the standard has been met.

(e) *Consequence of nonattainment in 2006.* In the event that EPA determines that the requirement in paragraph (b) of this section has not been attained in 2006, a deficit carryover volume shall be added to the renewable fuel volume obligation for 2007 for use in calculating the standard applicable to gasoline in 2007.

(1) The deficit carryover volume shall be calculated as follows:

$$DC = Vgas * (Rs - Ra)$$

Where:

DC = Deficit carryover, in gallons, of renewable fuel.

Vgas = Volume of gasoline sold or dispensed to U.S. consumers in 2006, in gallons.

Rs = 0.0278.

Ra = Ratio of renewable fuel volume divided by total gasoline volume determined in accordance with paragraph (d)(2) of this section.

(2) There shall be no other consequence of failure to attain the standard in paragraph (b) of this section in 2006 for any of the parties in paragraph (c) of this section.

[72 FR 23991, May 1, 2007]

§ 80.1101 Definitions.

The definitions of § 80.2 and the following additional definitions apply for the purposes of this subpart. For calendar year 2007 and beyond, the definitions in this section § 80.1101 supplant those in § 80.1100.

(a) *Cellulosic biomass ethanol* means either of the following:

(1) Ethanol derived from any lignocellulosic or hemicellulosic matter that is available on a renewable or recurring basis and includes any of the following:

(i) Dedicated energy crops and trees.

(ii) Wood and wood residues.

(iii) Plants.

(iv) Grasses.

(v) Agricultural residues.

(vi) Animal wastes and other waste materials, the latter of which may include waste materials that are residues (e.g., residual tops, branches, and limbs from a tree farm).

(vii) Municipal solid waste.

(2) Ethanol made at facilities at which animal wastes or other waste materials are digested or otherwise used onsite to displace 90 percent or more of the fossil fuel that is combusted to produce thermal energy integral to the process of making ethanol, by:

(i) The direct combustion of the waste materials or a byproduct resulting from digestion of such waste materials (e.g., methane from animal wastes) to make thermal energy; and/or

(ii) The use of waste heat captured from an off-site combustion process as a source of thermal energy.

(b) *Waste derived ethanol* means ethanol derived from either of the following:

(1) Animal wastes, including poultry fats and poultry wastes, and other waste materials.

(2) Municipal solid waste.

(c) *Biogas* means methane or other hydrocarbon gas produced from decaying organic material, including landfills, sewage waste treatment plants, and animal feedlots.

(d) *Renewable fuel.* (1) *Renewable fuel* is any motor vehicle fuel that is used to replace or reduce the quantity of fossil fuel present in a fuel mixture used to fuel a motor vehicle, and is produced from any of the following:

(i) Grain.

(ii) Starch.

(iii) Oilseeds.

(iv) Vegetable, animal, or fish materials including fats, greases, and oils.

(v) Sugarcane.

(vi) Sugar beets.

(vii) Sugar components.

(viii) Tobacco.

(ix) Potatoes.

(x) Other biomass.

(xi) Natural gas produced from a biogas source, including a landfill, sewage waste treatment plant, feedlot, or other place where there is decaying organic material.

(2) The term ''Renewable fuel'' includes cellulosic biomass ethanol, waste derived ethanol, biodiesel (mono-

alkyl ester), non-ester renewable diesel, and blending components derived from renewable fuel.

(3) Ethanol covered by this definition shall be denatured as required and defined in 27 CFR parts 20 and 21. Any volume of denaturant in ethanol in excess of 5 volume percent shall not be included in the volume of ethanol for purposes of determining compliance with the requirements under this subpart.

(4) Small volume additives (excluding denaturants) less than 1.0 percent of the total volume of a renewable fuel shall be counted as part of the total renewable fuel volume.

(5) A fuel produced by a renewable fuel producer that is used in boilers or heaters is not a motor vehicle fuel and therefore is not a renewable fuel.

(e) *Blending component* has the same meaning as ''Gasoline blending stock, blendstock, or component'' as defined at § 80.2(s), for which the portion that can be counted as renewable fuel is calculated as set forth in § 80.1115(a).

(f) *Motor vehicle* has the meaning given in Section 216(2) of the Clean Air Act (42 U.S.C. 7550).

(g) *Small refinery* means a refinery for which the average aggregate daily crude oil throughput for the calendar year 2004 (as determined by dividing the aggregate throughput for the calendar year by the number of days in the calendar year) does not exceed 75,000 barrels.

(h) *Biodiesel (mono-alkyl ester)* means a motor vehicle fuel or fuel additive which is all the following:

(1) Registered as a motor vehicle fuel or fuel additive under 40 CFR part 79.

(2) A mono-alkyl ester.

(3) Meets ASTM D–6751–07, entitled ''Standard Specification for Biodiesel Fuel Blendstock (B100) for Middle Distillate Fuels.'' ASTM D–6751–07 is incorporated by reference. This incorporation by reference was approved by the Director of the Federal Register in accordance with 5 U.S.C. 552(a) and 1 CFR part 51. A copy may be obtained from the American Society for Testing and Materials, 100 Barr Harbor Drive, West Conshohocken, Pennsylvania. A copy may be inspected at the EPA Docket Center, Docket No. EPA–HQ–OAR–2005–0161, EPA/DC, EPA West, Room 3334, 1301 Constitution Ave., NW., Washington, DC, or at the National Archives and Records Administration (NARA). For information on the availability of this material at NARA, call 202–741–6030, or go to: *http://www.archives.gov/federal-register/cfr/ibr-locations.html*.

(4) Intended for use in engines that are designed to run on conventional diesel fuel.

(5) Derived from nonpetroleum renewable resources (as defined in paragraph (m) of this section).

(i) *Non-ester renewable diesel* means a motor vehicle fuel or fuel additive which is all the following:

(1) Registered as a motor vehicle fuel or fuel additive under 40 CFR part 79.

(2) Not a mono-alkyl ester.

(3) Intended for use in engines that are designed to run on conventional diesel fuel.

(4) Derived from nonpetroleum renewable resources (as defined in paragraph (m) of this section).

(j) *Renewable crude* means biologically derived liquid feedstocks including but not limited to poultry fats, poultry wastes, vegetable oil, and greases that are used as feedstocks to make gasoline or diesel fuels at production units as specified in paragraph (k) of this section.

(k) *Renewable crude-based fuels* are renewable fuels that are gasoline or diesel products resulting from the processing of renewable crudes in production units within refineries or at dedicated facilities within refineries, that process petroleum based feedstocks and which make gasoline and diesel fuel.

(l) *Importers*. For the purposes of this subpart only, an importer of gasoline or renewable fuel is:

(1) Any person who brings gasoline or renewable fuel into the 48 contiguous states of the United States from a foreign country or from an area that has not opted in to the program requirements of this subpart pursuant to § 80.1143; and

(2) Any person who brings gasoline or renewable fuel into an area that has opted in to the program requirements of this subpart pursuant to § 80.1143.

(m) *Nonpetroleum renewable resources* include, but are not limited to the following:

(1) Plant oils.

(2) Animal fats and animal wastes, including poultry fats and poultry wastes, and other waste materials.

(3) Municipal solid waste and sludges and oils derived from wastewater and the treatment of wastewater.

(n) *Export of renewable fuel* means:

(1) Transfer of a batch of renewable fuel to a location outside the United States; and

(2) Transfer of a batch of renewable fuel from a location in the contiguous 48 states to Alaska, Hawaii, or a United States territory, unless that state or territory has received an approval from the Administrator to opt-in to the renewable fuel program pursuant to § 80.1143.

(o) *Renewable Identification Number (RIN)*, is a unique number generated to represent a volume of renewable fuel pursuant to §§ 80.1125 and 80.1126.

(1) *Gallon-RIN* is a RIN that represents an individual gallon of renewable fuel; and

(2) *Batch-RIN* is a RIN that represents multiple gallon-RINs.

(p) *Neat renewable fuel* is a renewable fuel to which only de minimus amounts of conventional gasoline or diesel have been added.

[72 FR 23992, May 1, 2007, as amended at 73 FR 57254, Oct. 2, 2008]

§§ 80.1102–80.1103 [Reserved]

§ 80.1104 What are the implementation dates for the Renewable Fuel Standard Program?

The RFS standards and other requirements of § 80.1101 and all sections following are effective beginning on September 1, 2007.

[72 FR 23993, May 1, 2007]

§ 80.1105 What is the Renewable Fuel Standard?

(a) The annual value of the renewable fuel standard for 2007 shall be 4.02 percent.

(b) Beginning with the 2008 compliance period, EPA will calculate the value of the annual standard and publish this value in the FEDERAL REGISTER by November 30 of the year preceding the compliance period.

(c) EPA will base the calculation of the standard on information provided by the Energy Information Administration regarding projected gasoline volumes and projected volumes of renewable fuel expected to be used in gasoline blending for the upcoming year.

(d) EPA will calculate the annual renewable fuel standard using the following equation:

$$\mathrm{RFStd}_i = 100 * \frac{\mathrm{RFV}_i - \mathrm{Cell}_i}{(\mathrm{G}_i - \mathrm{R}_i) + (\mathrm{GS}_i - \mathrm{RS}_i) - \mathrm{GE}_i}$$

Where:

RFStd_i = Renewable Fuel Standard, in year i, in percent.

RFV_i = Nationwide annual volume of renewable fuels required by section 211(o)(2)(B) of the Act (42 U.S.C. 7545), for year i, in gallons.

G_i = Amount of gasoline projected to be used in the 48 contiguous states, in year i, in gallons.

R_i = Amount of renewable fuel blended into gasoline that is projected to be used in the 48 contiguous states, in year i, in gallons.

GS_i = Amount of gasoline projected to be used in noncontiguous states or territories (if the state or territory opts-in), in year i, in gallons.

RS_i = Amount of renewable fuel blended into gasoline that is projected to be used in noncontiguous states or territories (if the state or territory opts-in), in year i, in gallons.

GE_i = Amount of gasoline projected to be produced by exempt small refineries and small refiners, in year i, in gallons (through 2010 only, except to the extent that a small refinery exemption is extended pursuant to § 80.1141(e)).

Cell_i = Beginning in 2013, the amount of renewable fuel that is required to come from cellulosic sources, in year i, in gallons.

(e) Beginning with the 2013 compliance period, EPA will calculate the value of the annual cellulosic standard

and publish this value in the FEDERAL REGISTER by November 30 of the year preceding the compliance period.

(f) EPA will calculate the annual cellulosic standard using the following equation:

$$RFCell_i = 100 * \frac{Cell_i}{(G_i - R_i) + (GS_i - RS_i)}$$

Where:

$RFCell_i$ = Renewable Fuel Cellulosic Standard in year i, in percent.

G_i = Amount of gasoline projected to be used in the 48 contiguous states, in year i, in gallons.

R_i = Amount of renewable fuel blended into gasoline that is projected to be used in the 48 contiguous states, in year i, in gallons.

GS_i = Amount of gasoline projected to be used in noncontiguous states or territories (if the state or territory opts-in), in year i, in gallons.

RS_i = Amount of renewable fuel blended into gasoline that is projected to be used in noncontiguous states or territories (if the state or territory opts-in), in year i, in gallons.

$Cell_i$ = Amount of renewable fuel that is required to come from cellulosic sources, in year i, in gallons.

[72 FR 23993, May 1, 2007]

§ 80.1106 To whom does the Renewable Volume Obligation apply?

(a) (1) An obligated party is a refiner that produces gasoline within the 48 contiguous states, or an importer that imports gasoline into the 48 contiguous states. A party that simply adds renewable fuel to gasoline, as defined in § 80.1107(c), is not an obligated party.

(2) If the Administrator approves a petition of Alaska, Hawaii, or a United States territory to opt-in to the renewable fuel program under the provisions in § 80.1143, then ''obligated party'' shall also include any refiner that produces gasoline within that state or territory, or any importer that imports gasoline into that state or territory.

(3) For the purposes of this section, ''gasoline'' refers to any and all of the products specified at § 80.1107(c).

(b) For each compliance period starting with 2007, any obligated party is required to demonstrate, pursuant to § 80.1127, that it has satisfied the Renewable Volume Obligation for that compliance period, as specified in § 80.1107(a).

(c) An obligated party may comply with the requirements of paragraph (b) of this section for all of its refineries in the aggregate, or for each refinery individually.

(d) An obligated party must comply with the requirements of paragraph (b) of this section for all of its imported gasoline in the aggregate.

(e) An obligated party that is both a refiner and importer must comply with the requirements of paragraph (b) of this section for its imported gasoline separately from gasoline produced by its refinery or refineries.

(f) Where a refinery or importer is jointly owned by two or more parties, the requirements of paragraph (b) of this section may be met by one of the joint owners for all of the gasoline produced at the refinery, or all of the imported gasoline, in the aggregate, or each party may meet the requirements of paragraph (b) of this section for the portion of the gasoline that it owns, as long as all of the gasoline produced at the refinery, or all of the imported gasoline, is accounted for in determining the renewable fuels obligation under § 80.1107.

(g) The requirements in paragraph (b) of this section apply to the following compliance periods:

(1) For 2007, the compliance period is September 1 through December 31.

(2) Beginning in 2008, and every year thereafter, the compliance period is January 1 through December 31.

[72 FR 23993, May 1, 2007]

§ 80.1107 How is the Renewable Volume Obligation calculated?

(a) The Renewable Volume Obligation for an obligated party is determined according to the following formula:

$$RVO_i = (RFStd_i * GV_i) + D_{i-1}$$

Where:

RVO_i = The Renewable Volume Obligation for an obligated party for calendar year i, in gallons of renewable fuel.

$RFStd_i$ = The renewable fuel standard for calendar year i, determined by EPA pursuant to § 80.1105, in percent.

GV_i = The non-renewable gasoline volume, determined in accordance with paragraphs (b), (c), and (d) of this section,

which is produced or imported by the obligated party in calendar year i, in gallons.

D_{i-1} = Renewable fuel deficit carryover from the previous year, per § 80.1127(b), in gallons.

(b) The non-renewable gasoline volume for a refiner, blender, or importer for a given year, GV_i, specified in paragraph (a) of this section is calculated as follows:

$$GV_i = \sum_{x=1}^{n} G_x - \sum_{y=1}^{m} RB_y$$

Where:

x = Individual batch of gasoline produced or imported in calendar year i.

n = Total number of batches of gasoline produced or imported in calendar year i.

G_X = Volume of batch x of gasoline produced or imported, in gallons.

y = Individual batch of renewable fuel blended into gasoline in calendar year i.

m = Total number of batches of renewable fuel blended into gasoline in calendar year i.

RB_y = Volume of batch y of renewable fuel blended into gasoline, in gallons.

(c) All of the following products that are produced or imported during a compliance period, collectively called ''gasoline'' for purposes of this section (unless otherwise specified), are to be included (but not double-counted) in the volume used to calculate a party's renewable volume obligation under paragraph (a) of this section, except as provided in paragraph (d) of this section:

(1) Reformulated gasoline, whether or not renewable fuel is later added to it.

(2) Conventional gasoline, whether or not renewable fuel is later added to it.

(3) Reformulated gasoline blendstock that becomes finished reformulated gasoline upon the addition of oxygenate (''RBOB'').

(4) Conventional gasoline blendstock that becomes finished conventional gasoline upon the addition of oxygenate (''CBOB'').

(5) Blendstock (including butane and gasoline treated as blendstock (''GTAB'')) that has been combined with other blendstock and/or finished gasoline to produce gasoline.

(6) Any gasoline, or any unfinished gasoline that becomes finished gasoline upon the addition of oxygenate, that is produced or imported to comply with a state or local fuels program.

(d) The following products are not included in the volume of gasoline produced or imported used to calculate a party's renewable volume obligation under paragraph (a) of this section:

(1) Any renewable fuel as defined in § 80.1101(d).

(2) Blendstock that has not been combined with other blendstock or finished gasoline to produce gasoline.

(3) Gasoline produced or imported for use in Alaska, Hawaii, the Commonwealth of Puerto Rico, the U.S. Virgin Islands, Guam, American Samoa, and the Commonwealth of the Northern Marianas, unless the area has opted into the RFS program under § 80.1143.

(4) Gasoline produced by a small refinery that has an exemption under § 80.1141 or an approved small refiner that has an exemption under § 80.1142 until January 1, 2011 (or later, for small refineries, if their exemption is extended pursuant to § 80.1141(e)).

(5) Gasoline exported for use outside the 48 United States, and gasoline exported for use outside Alaska, Hawaii, the Commonwealth of Puerto Rico, the U.S. Virgin Islands, Guam, American Samoa, and the Commonwealth of the Northern Marianas, if the area has opted into the RFS program under § 80.1143.

(6) For blenders, the volume of finished gasoline, RBOB, or CBOB to which a blender adds blendstocks.

(7) The gasoline portion of transmix produced by a transmix processor, or the transmix blended into gasoline by a transmix blender, under 40 CFR 80.84.

[72 FR 23993, May 1, 2007, as amended at 73 FR 57255, Oct. 2, 2008]

§§ 80.1108–80.1114 [Reserved]

§ 80.1115 How are equivalence values assigned to renewable fuel?

(a)(1) Each gallon of a renewable fuel shall be assigned an equivalence value by the producer or importer pursuant to paragraph (b) or (c) of this section.

(2) The equivalence value is a number that is used to determine how many gallon-RINs can be generated for a batch of renewable fuel according to § 80.1126.

(b) Equivalence values shall be assigned for certain renewable fuels as follows:

(1) Cellulosic biomass ethanol and waste derived ethanol produced on or before December 31, 2012 which is denatured shall have an equivalence value of 2.5.

(2) Ethanol other than cellulosic biomass ethanol or waste-derived ethanol which is denatured shall have an equivalence value of 1.0.

(3) Biodiesel (mono-alkyl ester) shall have an equivalence value of 1.5.

(4) Butanol shall have an equivalence value of 1.3.

(5) Non-ester renewable diesel, including that produced from coprocessing a renewable crude with fossil fuels in a hydrotreater, shall have an equivalence value of 1.7.

(6) All other renewable crude-based renewable fuels shall have an equivalence value of 1.0.

(c)(1) For renewable fuels not listed in paragraph (b) of this section, a producer or importer shall submit an application to the Agency for an equivalence value following the provisions of paragraph (d) of this section.

(2) A producer or importer may also submit an application for an alternative equivalence value pursuant to paragraph (d) of this section if the renewable fuel is listed in paragraph (b) of this section, but the producer or importer has reason to believe that a different equivalence value than that listed in paragraph (b) of this section is warranted.

(d) *Determination of equivalence values.* (1) Except as provided in paragraph (d)(4) of this section, the equivalence value for renewable fuels described in paragraph (c) of this section shall be calculated using the following formula:

$$EV = (R / 0.931) * (EC / 77{,}550)$$

Where:

EV = Equivalence Value for the renewable fuel, rounded to the nearest tenth.

R = Renewable content of the renewable fuel. This is a measure of the portion of a renewable fuel that came from a renewable source, expressed as a percent, on an energy basis.

EC = Energy content of the renewable fuel, in Btu per gallon (lower heating value).

(2) The application for an equivalence value shall include a technical justification that includes a description of the renewable fuel, feedstock(s) used to make it, and the production process.

(3) The Agency will review the technical justification and assign an appropriate Equivalence Value to the renewable fuel based on the procedure in this paragraph (d).

(4) For biogas, the Equivalence Value is 1.0, and 77,550 Btu of biogas is equivalent to 1 gallon of renewable fuel.

[72 FR 23995, May 1, 2007]

§§ 80.1116–80.1124 [Reserved]

§ 80.1125 Renewable Identification Numbers (RINs).

Each RIN is a 38 character numeric code of the following form:

KYYYYCCCCFFFFFBBBBBRRDSS SSSSSSEEEEEEEE

(a) K is a number identifying the type of RIN as follows:

(1) K has the value of 1 when the RIN is assigned to a volume of renewable fuel pursuant to §§ 80.1126(e) and 80.1128(a).

(2) K has the value of 2 when the RIN has been separated from a volume of renewable fuel pursuant to § 80.1126(e)(4) or § 80.1129.

(b) YYYY is the calendar year in which the batch of renewable fuel was produced or imported. YYYY also represents the year in which the RIN was originally generated.

(c) CCCC is the registration number assigned according to § 80.1150 to the producer or importer of the batch of renewable fuel.

(d) FFFFF is the registration number assigned according to § 80.1150 to the facility at which the batch of renewable fuel was produced or imported.

(e) BBBBB is a serial number assigned to the batch which is chosen by the producer or importer of the batch such that no two batches have the same value in a given calendar year.

(f) RR is a number representing the equivalence value of the renewable fuel as specified in § 80.1115 and multiplied by 10 to produce the value for RR.

(g) D is a number identifying the type of renewable fuel, as follows:

(1) D has the value of 1 if the renewable fuel can be categorized as cellulosic biomass ethanol as defined in § 80.1101(a).

(2) D has the value of 2 if the renewable fuel cannot be categorized as cellulosic biomass ethanol as defined in § 80.1101(a).

(h) SSSSSSSS is a number representing the first gallon-RIN associated with a batch of renewable fuel.

(i) EEEEEEEE is a number representing the last gallon-RIN associated with a batch of renewable fuel. EEEEEEEE will be identical to SSSSSSSS if the batch-RIN represents a single gallon-RIN. Assign the value of EEEEEEEE as described in § 80.1126.

[72 FR 23995, May 1, 2007]

§ 80.1126 How are RINs generated and assigned to batches of renewable fuel by renewable fuel producers or importers?

(a) *Regional applicability*. (1) Except as provided in paragraph (b) of this section, a batch RIN must be generated by a renewable fuel producer or importer for every batch of renewable fuel produced by a facility located in the contiguous 48 states of the United States, or imported into the contiguous 48 states.

(2) If the Administrator approves a petition of Alaska, Hawaii, or a United States territory to opt-in to the renewable fuel program under the provisions in § 80.1143, then the requirements of paragraph (a)(1) of this section shall also apply to renewable fuel produced or imported into that state or territory beginning in the next calendar year.

(b) *Volume threshold*. Renewable fuel producers located within the United States that produce less than 10,000 gallons of renewable fuel each year, and importers that import less than 10,000 gallons of renewable fuel each year, are not required to generate and assign RINs to batches of renewable fuel. Such producers and importers are also exempt from the registration, reporting, and recordkeeping requirements of §§ 80.1150–80.1152, and the attest engagement requirements of § 80.1164. However, for such producers and importers that voluntarily generate and assign RINs, all the requirements of this subpart apply.

(c) *Definition of batch*. For the purposes of this section and § 80.1125, a ''batch of renewable fuel'' is a volume of renewable fuel that has been assigned a unique RIN code BBBBB within a calendar year by the producer or importer of the renewable fuel in accordance with the provisions of this section and § 80.1125.

(1) The number of gallon-RINs generated for a batch of renewable fuel may not exceed 99,999,999.

(2) A batch of renewable fuel cannot represent renewable fuel produced or imported in excess of one calendar month.

(d) *Generation of RINs*. (1) Except as provided in paragraph (b) of this section, the producer or importer of a batch of renewable fuel must generate a batch-RIN for that batch, including any renewable fuel contained in imported gasoline.

(2) A producer or importer of renewable fuel may generate RINs for volumes of renewable fuel that it owns on September 1, 2007.

(3) A party generating a RIN shall specify the appropriate numerical values for each component of the RIN in accordance with the provisions of § 80.1125 and this paragraph (d).

(4) Except as provided in paragraph (d)(6) of this section, the number of gallon-RINs that shall be generated for a given batch of renewable fuel shall be equal to a volume calculated according to the following formula:

$$V_{RIN} = EV * V_s$$

Where:

V_{RIN} = RIN volume, in gallons, for use determining the number of gallon-RINs that shall be generated.

EV = Equivalence value for the renewable fuel per § 80.1115.

V_s = Standardized volume of the batch of renewable fuel at 60 °F, in gallons, calculated in accordance with paragraph (d)(7) of this section.

(5) Multiple gallon-RINs generated to represent a given volume of renewable fuel can be represented by a single batch-RIN through the appropriate designation of the RIN volume codes SSSSSSSS and EEEEEEEE.

(i) The value of SSSSSSSS in the batch-RIN shall be 00000001 to represent the first gallon-RIN associated with the volume of renewable fuel.

(ii) The value of EEEEEEEE in the batch-RIN shall represent the last gallon-RIN associated with the volume of

renewable fuel, based on the RIN volume determined pursuant to paragraph (d)(4) of this section.

(6) (i) For renewable crude-based renewable fuels produced in a facility or unit that coprocesses renewable crudes and fossil fuels, the number of gallon-RINs that shall be generated for a given batch of renewable fuel shall be equal to the gallons of renewable crude used rather than the gallons of renewable fuel produced.

(ii) Parties that produce renewable crude-based renewable fuels in a facility or unit that coprocesses renewable crudes and fossil fuels may submit a petition to the Agency requesting the use of volumes of renewable fuel produced as the basis for the number of gallon-RINs, pursuant to paragraph (d)(4) of this section.

(7) *Standardization of volumes.* In determining the standardized volume of a batch of renewable fuel for purposes of generating RINs under this paragraph (d), the batch volumes shall be adjusted to a standard temperature of 60 °F.

(i) For ethanol, the following formula shall be used:

$$V_{s,e} = V_{a,e} * (-0.0006301 * T + 1.0378)$$

Where:

$V_{s,e}$ = Standardized volume of ethanol at 60 °F, in gallons.
$V_{a,e}$ = Actual volume of ethanol, in gallons.
T = Actual temperature of the batch, in °F.

(ii) For biodiesel (mono alkyl esters), the following formula shall be used:

$$V_{s,b} = V_{a,b} * (-0.0008008 * T + 1.0480)$$

Where:

$V_{s,b}$ = Standardized volume of biodiesel at 60 °F, in gallons.
$V_{a,b}$ = Actual volume of biodiesel, in gallons.
T = Actual temperature of the batch, in °F.

(iii) For other renewable fuels, an appropriate formula commonly accepted by the industry shall be used to standardize the actual volume to 60 °F. Formulas used must be reported to the Agency, and may be reviewed for appropriateness.

(8) (i) A party is prohibited from generating RINs for a volume of renewable fuel that it produces if:

(A) The renewable fuel has been produced from a chemical conversion process that uses another renewable fuel as a feedstock; and

(B) The renewable fuel used as a feedstock was produced by another party.

(ii) Any RINs that the party acquired with renewable fuel used as a feedstock shall be assigned to the new renewable fuel that was made with that feedstock.

(e) *Assignment of RINs to batches.* (1) Except as provided in paragraph (e)(4) of this section, the producer or importer of renewable fuel must assign all RINs generated to volumes of renewable fuel.

(2) A RIN is assigned to a volume of renewable fuel when ownership of the RIN is transferred along with the transfer of ownership of the volume of renewable fuel, pursuant to §80.1128(a).

(3) All assigned RINs shall have a K code value of 1.

(4) *RINs not assigned to batches.* (i) If a party produces or imports a batch of cellulosic biomass ethanol or waste-derived ethanol having an equivalence value of 2.5, that party must assign at least one gallon-RIN to each gallon of cellulosic biomass ethanol or waste-derived ethanol, representing the first 1.0 portion of the Equivalence Value.

(ii) Any remaining gallon-RINs generated for the cellulosic biomass ethanol or waste-derived ethanol which represent the remaining 1.5 portion of the Equivalence Value may remain unassigned.

(iii) The producer or importer of cellulosic biomass ethanol or waste-derived ethanol shall designate the K code as 2 for all unassigned RINs.

[72 FR 23995, May 1, 2007, as amended at 73 FR 57255, Oct. 2, 2008]

§80.1127 How are RINs used to demonstrate compliance?

(a) *Renewable volume obligations.* (1) Except as specified in paragraph (b) of this section, each party that is obligated to meet the Renewable Volume Obligation under §80.1107, or each party that is an exporter of renewable fuels that is obligated to meet a Renewable Volume Obligation under §80.1130, must demonstrate pursuant to §80.1152(a)(1) that it has taken ownership of sufficient RINs to satisfy the following equation:

$$(\Sigma RINNUM)_i + (\Sigma RINNUM)_{i-1} = RVO_i$$

Where:

$(\Sigma RINNUM)_i$ = Sum of all owned gallon-RINs that were generated in year i and are being applied towards the RVO_i, in gallons.

$(\Sigma RINNUM)_{i-1}$ = Sum of all owned gallon-RINs that were generated in year i−1 and are being applied towards the RVO_i, in gallons.

RVO_i = The Renewable Volume Obligation for the obligated party or renewable fuel exporter for calendar year i, in gallons, pursuant to § 80.1107 or § 80.1130.

(2) For compliance for calendar years 2008 and later, the value of $(\Sigma RINNUM)_{i-1}$ may not exceed a value determined by the following inequality:

$$(\Sigma RINNUM)_{i-1} \leq 0.20 \times RVO_i$$

(3) RINs may only be used to demonstrate compliance with the RVO for the calendar year in which they were generated or the following calendar year. RINs used to demonstrate compliance in one year cannot be used to demonstrate compliance in any other year.

(4) A party may only use a RIN for purposes of meeting the requirements of paragraphs (a)(1) and (a)(2) of this section if that RIN is an unassigned RIN with a K code of 2 obtained in accordance with §§ 80.1126(e)(4), 80.1128, and 80.1129.

(5) The number of gallon-RINs associated with a given batch-RIN that can be used for compliance with the RVO shall be calculated from the following formula:

$$RINNUM = EEEEEEEE - SSSSSSSS + 1$$

Where:

RINNUM = Number of gallon-RINs associated with a batch-RIN, where each gallon-RIN represents one gallon of renewable fuel for compliance purposes.

EEEEEEEE = Batch-RIN component identifying the last gallon-RIN associated with the batch-RIN.

SSSSSSSS = Batch-RIN component identifying the first gallon-RIN associated with the batch-RIN.

(b) *Deficit carryovers.* (1) An obligated party or an exporter of renewable fuel that fails to meet the requirements of paragraphs (a)(1) or (a)(2) of this section for calendar year i is permitted to carry a deficit into year i+1 under the following conditions:

(i) The party did not carry a deficit into calendar year i from calendar year i−1.

(ii) The party subsequently meets the requirements of paragraph (a)(1) of this section for calendar year i+1 and carries no deficit into year i+2.

(2) A deficit is calculated according to the following formula:

$$D_i = RVO_i - [(\Sigma RINNUM)_i + (\Sigma RINNUM)_{i-1}]$$

Where:

D_i = The deficit, in gallons, generated in calendar year i that must be carried over to year i+1 if allowed to do so pursuant to paragraph (b)(1)(i) of this section.

RVO_i = The Renewable Volume Obligation for the obligated party or renewable fuel exporter for calendar year i, in gallons.

$(\Sigma RINNUM)_i$ = Sum of all acquired gallon-RINs that were generated in year i and are being applied towards the RVO_i, in gallons.

$(\Sigma RINNUM)_{i-1}$ = Sum of all acquired gallon-RINs that were generated in year i-1 and are being applied towards the RVO_i, in gallons.

[72 FR 23995, May 1, 2007, as amended at 73 FR 57255, Oct. 2, 2008; 73 FR 71560, Nov. 25, 2008]

§ 80.1128 General requirements for RIN distribution.

(a) *RINs assigned to volumes of renewable fuel.* (1) *Assigned RIN*, for the purposes of this subpart, means a RIN assigned to a volume of renewable fuel pursuant to § 80.1126(e) with a K code of 1.

(2) Except as provided in § 80.1126(e)(4) and § 80.1129, no party can separate a RIN that has been assigned to a batch pursuant to § 80.1126(e).

(3) An assigned RIN cannot be transferred to another party without simultaneously transferring a volume of renewable fuel to that same party.

(4) No more than 2.5 assigned gallon-RINs with a K code of 1 can be transferred to another party with every gallon of renewable fuel transferred to that same party.

(5)(i) On each of the dates listed in paragraph (a)(5)(v) of this section in any calendar year, the following equation must be satisfied for assigned RINs and volumes of renewable fuel owned by a party:

$$\Sigma(RIN)_D \leq \Sigma(V_{si} \times EV_i)_D$$

Where:

D = Applicable date.

$\Sigma(RIN)_D$ = Sum of all assigned gallon-RINs with a K code of 1 that are owned on date D.

$(V_{si})_D$ = Volume i of renewable fuel owned on date D, standardized to 60 °F, in gallons.

EV_i = Equivalence value representing volume i.

$\Sigma(Vsi \times EV_i)_D$ = Sum of all volumes of renewable fuel owned on date D, multiplied by their respective equivalence values.

(ii) The equivalence value EVi for use in the equation in paragraph (a)(5)(i) of this section for any volume of renewable fuel shall be 2.5.

(iii) The applicable dates are March 31, June 30, September 30, and December 31. For 2007 only, the applicable dates are September 30 and December 31.

(6) Any transfer of ownership of assigned RINs must be documented on product transfer documents generated pursuant to § 80.1153.

(i) The RIN must be recorded on the product transfer document used to transfer ownership of the RIN and the volume to another party; or

(ii) The RIN must be recorded on a separate product transfer document transferred to the same party on the same day as the product transfer document used to transfer ownership of the volume of renewable fuel.

(b) *RINs not assigned to volumes of renewable fuel.* (1) *Unassigned RIN*, for the purposes of this subpart, means a RIN with a K code of 2 that has been separated from a volume of renewable fuel pursuant to § 80.1126(e)(4) or § 80.1129.

(2) Any party that has registered pursuant to § 80.1150 can hold title to an unassigned RIN.

(3) Unassigned RINs can be transferred from one party to another any number of times.

(4) An unassigned batch-RIN can be divided by its holder into multiple batch-RINs, each representing a smaller number of gallon-RINs, if all of the following conditions are met:

(i) All RIN components other than SSSSSSSS and EEEEEEEE are identical for the original parent and newly formed daughter RINs.

(ii) The sum of the gallon-RINs associated with the multiple daughter batch-RINs is equal to the gallon-RINs associated with the parent batch-RIN.

[72 FR 23995, May 1, 2007, as amended at 73 FR 57255, Oct. 2, 2008]

§ 80.1129 Requirements for separating RINs from volumes of renewable fuel.

(a)(1) Separation of a RIN from a volume of renewable fuel means termination of the assignment of the RIN to a volume of renewable fuel.

(2) RINs that have been separated from volumes of renewable fuel become unassigned RINs subject to the provisions of § 80.1128(b).

(b) A RIN that is assigned to a volume of renewable fuel is separated from that volume only under one of the following conditions:

(1) Except as provided in paragraphs (b)(6) and (b)(8) of this section, a party that is an obligated party according to § 80.1106 must separate any RINs that have been assigned to a volume of renewable fuel if they own that volume.

(2) Except as provided in paragraph (b)(5) of this section, any party that owns a volume of renewable fuel must separate any RINs that have been assigned to that volume once the volume is blended with gasoline or diesel to produce a motor vehicle fuel. A party may separate up to 2.5 RINs per gallon of fuel that is blended.

(3) Any party that exports a volume of renewable fuel must separate any RINs that have been assigned to the exported volume.

(4) Any party that produces, imports, owns, sells or uses a volume of neat renewable fuel may separate any RINs that have been assigned to that volume of neat renewable fuel if the party designates the neat renewable fuel as motor vehicle fuel, and the neat renewable fuel is used as a motor vehicle fuel.

(5) RINs assigned to a volume of biodiesel (mono-alkyl ester) can only be separated from that volume pursuant to paragraph (b)(2) of this section if such biodiesel is blended into diesel fuel at a concentration of 80 volume percent biodiesel (mono-alkyl ester) or less.

(i) This paragraph (b)(5) shall not apply to obligated parties or exporters of renewable fuel.

(ii) This paragraph (b)(5) shall not apply to any party meeting the requirements of paragraph (b)(4) of this section.

(6) For RINs that an obligated party generates from renewable fuel that has not been blended into gasoline, the obligated party can only separate such RINs from volumes of renewable fuel if the number of gallon-RINs separated is less than or equal to its annual RVO.

(7) A producer or importer of cellulosic biomass ethanol or waste-derived ethanol can separate a portion of the RINs that it generates pursuant to § 80.1126(e)(4).

(8) For a party that has received a small refinery exemption under § 80.1141 or a small refiner exemption under § 80.1142, and who is not otherwise an obligated party, during the period of time that the small refinery or small refiner exemption is in effect the party may only separate RINs that have been assigned to volumes of renewable fuel that the party blends into motor vehicle fuel in accordance with paragraph (b)(2) of this section.

(c) The party responsible for separating a RIN from a volume of renewable fuel shall change the K code in the RIN from a value of 1 to a value of 2 prior to transferring the RIN to any other party.

(d) Upon and after separation of a RIN from its associated volume, product transfer documents used to transfer ownership of the volume must continue to meet the requirements of § 80.1153(a)(5)(iii).

(e) Any obligated party that uses a renewable fuel in a boiler or heater must retire any RINs associated with that volume of renewable fuel and report the retired RINs in the applicable reports under § 80.1152.

[72 FR 23995, May 1, 2007, as amended at 73 FR 57255, Oct. 2, 2008; 74 FR 29952, June 24, 2009]

§ 80.1130 Requirements for exporters of renewable fuels.

(a) Any party that owns any amount of renewable fuel (in its neat form or blended with gasoline or diesel) that is exported from the region described in § 80.1126(a) shall acquire sufficient RINs to offset a Renewable Volume Obligation representing the exported renewable fuel.

(b) *Renewable Volume Obligations.* An exporter of renewable fuel shall determine its Renewable Volume Obligation from the volumes of the renewable fuel exported.

(1) A renewable fuel exporter's total Renewable Volume Obligation shall be calculated according to the following formula:

$$RVO_i = (VOL_k * EV_k)_i + D_{i-1}$$

Where:

RVO_i = The Renewable Volume Obligation for the exporter for calendar year i, in gallons of renewable fuel.

k = A discrete volume of renewable fuel.

VOL_k = The standardized volume of discrete volume k of exported renewable fuel, in gallons, calculated in accordance with § 80.1126(d)(7).

EV_k = The equivalence value associated with discrete volume k.

= Sum involving all volumes of renewable fuel exported.

D_{i-1} = Renewable fuel deficit carryover from the previous year, in gallons.

(2)(i) If the equivalence value for a volume of renewable fuel can be determined pursuant to § 80.1115 based on its composition, then the appropriate equivalence value shall be used in the calculation of the exporter's Renewable Volume Obligation.

(ii) If the equivalence value for a volume of renewable fuel cannot be determined, the value of EV_k shall be 1.0.

(c) Each exporter of renewable fuel must demonstrate compliance with its RVO using RINs it has acquired pursuant to § 80.1127.

[72 FR 23995, May 1, 2007]

§ 80.1131 Treatment of invalid RINs.

(a) *Invalid RINs.* An invalid RIN is a RIN that is any of the following:

(1) Is a duplicate of a valid RIN.

(2) Was based on volumes that have not been standardized to 60 °F.

(3) Has expired.

(4) Was based on an incorrect equivalence value.

(5) Is deemed invalid under § 80.1167(g).

(6) Does not represent renewable fuel as it is defined in § 80.1101.

(7) Was otherwise improperly generated.

(8) In the event that the same RIN is transferred to two or more parties, all such RINs will be deemed to be invalid, unless EPA in its sole discretion determines that some portion of these RINs is valid.

(b) In the case of RINs that are invalid, the following provisions apply:

(1) Invalid RINs cannot be used to achieve compliance with the Renewable Volume Obligation of an obligated party or exporter, regardless of the party's good faith belief that the RINs were valid at the time they were acquired.

(2) Upon determination by any party that RINs owned are invalid, the party must adjust their records, reports, and compliance calculations as necessary to reflect the deletion of the invalid RINs.

(3) Any valid RINs remaining after deleting invalid RINs must first be applied to correct the transfer of invalid RINs to another party before applying the valid RINs to meet the party's Renewable Volume Obligation at the end of the compliance year.

[72 FR 23995, May 1, 2007, as amended at 74 FR 29952, June 24, 2009]

§ 80.1132 Reported spillage or disposal of renewable fuel.

(a) A reported spillage or disposal under this subpart means a spillage or disposal of renewable fuel associated with a requirement by a federal, state or local authority to report the spillage or disposal.

(b) Except as provided in paragraph (c) of this section, in the event of a reported spillage or disposal of any volume of renewable fuel, the owner of the renewable fuel must retire a number of gallon-RINs corresponding to the volume of spilled or disposed of renewable fuel multiplied by the lesser of its equivalence value or the number of RINs received with the spilled or disposed fuel, not to exceed 2.5 RINs per gallon.

(1) If the equivalence value for the spilled volume may be determined pursuant to § 80.1115 based on its composition, then the appropriate equivalence value shall be used.

(2) If the equivalence value for a spilled volume of renewable fuel cannot be determined, the equivalence value shall be 1.0.

(c) If the owner of a volume of renewable fuel that is spilled or disposed of and reported establishes that no RINs were generated to represent the volume, then no gallon-RINs shall be retired.

(d) A RIN that is retired under paragraph (b) of this section:

(1) Must be reported as a retired RIN in the applicable reports under § 80.1152.

(2) May not be transferred to another party or used by any obligated party to demonstrate compliance with the party's Renewable Volume Obligation.

[72 FR 23995, May 1, 2007, as amended at 73 FR 57256, Oct. 2, 2008]

§§ 80.1133–80.1140 [Reserved]

§ 80.1141 Small refinery exemption.

(a)(1) Gasoline produced at a refinery by a refiner, or foreign refiner (as defined at § 80.1165(a)), is exempt from the renewable fuel standards of § 80.1105 and the requirements that apply to obligated parties under this subpart if that refinery meets the definition of a small refinery under § 80.1101(g) for calendar year 2004.

(2) This exemption shall apply through December 31, 2010, unless a refiner chooses to waive this exemption (as described in paragraph (f) of this section), or the exemption is extended (as described in paragraph (e) of this section).

(3) For the purposes of this section, the term ''refiner'' shall include foreign refiners.

(4) This exemption shall only apply to refineries that process crude oil, or feedstocks derived from crude oil, through refinery processing units.

(b)(1) The small refinery exemption is effective immediately, except as specified in paragraph (b)(4) of this section.

(2) A refiner owning a small refinery must submit a verification letter to EPA containing all of the following information:

(i) The annual average aggregate daily crude oil throughput for the period January 1, 2004, through December 31, 2004 (as determined by dividing the aggregate throughput for the calendar year by the number 365).

(ii) A letter signed by the president, chief operating or chief executive officer of the company, or his/her designee, stating that the information contained in the letter is true to the best of his/her knowledge, and that the refinery was small as of December 31, 2004.

(iii) Name, address, phone number, facsimile number, and e-mail address of a corporate contact person.

(3) Verification letters must be submitted by August 31, 2007, to one of the addresses listed in paragraph (h) of this section.

(4) For foreign refiners the small refinery exemption shall be effective upon approval, by EPA, of a small refinery application. The application must contain all of the elements required for small refinery verification letters (as specified in paragraph (b)(2) of this section), must satisfy the provisions of § 80.1165(f) through (h) and (o), and must be submitted by August 31, 2007 to one of the addresses listed in paragraph (h) of this section.

(c) If EPA finds that a refiner provided false or inaccurate information regarding a refinery's crude throughput (pursuant to paragraph (b)(2)(i) of this section) in its small refinery verification letter, the exemption will be void as of the effective date of these regulations.

(d) If a refiner is complying on an aggregate basis for multiple refineries, any such refiner may exclude from the calculation of its Renewable Volume Obligation (under § 80.1107(a)) gasoline from any refinery receiving the small refinery exemption under paragraph (a) of this section.

(e)(1) The exemption period in paragraph (a) of this section shall be extended by the Administrator for a period of not less than two additional years if a study by the Secretary of Energy determines that compliance with the requirements of this subpart would impose a disproportionate economic hardship on the small refinery.

(i) A refiner may at any time petition the Administrator for an extension of its small refinery exemption under paragraph (a) of this section for the reason of disproportionate economic hardship.

(ii) A petition for an extension of the small refinery exemption must specify the factors that demonstrate a disproportionate economic hardship and must provide a detailed discussion regarding the inability of the refinery to produce gasoline meeting the requirements of § 80.1105 and the date the refiner anticipates that compliance with the requirements can be achieved at the small refinery.

(2) The Administrator shall act on such a petition not later than 90 days after the date of receipt of the petition.

(f) At any time, a refiner with an approved small refinery exemption under paragraph (a) of this section may waive that exemption upon notification to EPA.

(1) A refiner's notice to EPA that it intends to waive its small refinery exemption must be received by November 1 to be effective in the next compliance year.

(2) The waiver will be effective beginning on January 1 of the following calendar year, at which point the gasoline produced at that refinery will be subject to the renewable fuels standard of § 80.1105.

(3) The waiver must be sent to EPA at one of the addresses listed in paragraph (h) of this section.

(g) A refiner that acquires a refinery from either an approved small refiner (as defined under § 80.1142(a)) or another refiner with an approved small refinery exemption under paragraph (a) of this section shall notify EPA in writing no later than 20 days following the acquisition.

(h) Verification letters under paragraph (b) of this section, petitions for small refinery hardship extensions under paragraph (e) of this section, and small refinery exemption waivers under paragraph (f) of this section shall be sent to one of the following addresses:

(1) *For U.S. mail:* U.S. EPA—Attn: RFS Program, 6406J, 1200 Pennsylvania Avenue, NW., Washington, DC 20460.

(2) *For overnight or courier services:* U.S. EPA, Attn: RFS Program, 6406J, 1310 L Street, NW., 6th floor, Washington, DC 20005.

[72 FR 23999, May 1, 2007, as amended at 73 FR 57256, Oct. 2, 2008]

§ 80.1142 What are the provisions for small refiners under the RFS program?

(a)(1) Gasoline produced by a refiner, or foreign refiner (as defined at § 80.1165(a)), is exempt from the renewable fuel standards of § 80.1105 and the requirements that apply to obligated parties under this subpart if the refiner or foreign refiner does not meet the definition of a small refinery under § 80.1101(g) but meets all of the following criteria:

(i) The refiner produced gasoline at its refineries by processing crude oil through refinery processing units from January 1, 2004 through December 31, 2004.

(ii) The refiner employed an average of no more than 1,500 people, based on the average number of employees for all pay periods for calendar year 2004 for all subsidiary companies, all parent companies, all subsidiaries of the parent companies, and all joint venture partners.

(iii) The refiner had a corporate-average crude oil capacity less than or equal to 155,000 barrels per calendar day (bpcd) for 2004.

(2) The small refiner exemption shall apply through December 31, 2010, unless a refiner chooses to waive the exemption (pursuant to paragraph (h) of this section) prior to that date.

(3) For the purposes of this section, the term ''refiner'' shall include foreign refiners.

(4) This exemption shall only apply to refineries that process crude oil, or feedstocks derived from crude oil, through refinery processing units.

(b) The small refiner exemption is effective immediately, except as provided in paragraph (d) of this section. Refiners who qualify for the small refiner exemption under paragraph (a) of this section must submit a verification letter (and any other relevant information) to EPA containing all of the following information for the refiner and for all subsidiary companies, all parent companies, all subsidiaries of the parent companies, and all joint venture partners:

(1)(i) A listing of the name and address of each company location where any employee worked for the period January 1, 2004 through December 31, 2004.

(ii) The average number of employees at each location based on the number of employees for each pay period for the period January 1, 2004 through December 31, 2004.

(iii) The type of business activities carried out at each location.

(iv) For joint ventures, the total number of employees includes the combined employee count of all corporate entities in the venture.

(v) For government-owned refiners, the total employee count includes all government employees.

(2) The total corporate crude oil capacity of each refinery as reported to the Energy Information Administration (EIA) of the U.S. Department of Energy (DOE), for the period January 1, 2004 through December 31, 2004. The information submitted to EIA is presumed to be correct. In cases where a company disagrees with this information, the company may petition EPA with appropriate data to correct the record when the company submits its verification letter.

(3) The verification letter must be signed by the president, chief operating or chief executive officer of the company, or his/her designee, stating that the information is true to the best of his/her knowledge, and that the company owned the refinery as of December 31, 2004.

(4) Name, address, phone number, facsimile number, and e-mail address of a corporate contact person.

(c) Verification letters under paragraph (b) of this section must be submitted by September 1, 2007.

(d) For foreign refiners the small refiner exemption shall be effective upon approval, by EPA, of a small refiner application. The application must contain all of the elements required for small refiner verification letters (as specified in paragraphs (b)(1), (b)(3), and (b)(4) of this section), must demonstrate compliance with the crude oil capacity criterion of paragraph (a)(1)(iii) of this section, must satisfy the provisions of § 80.1165(f) through (h) and (o), and must be submitted by September 1, 2007 to one of the addresses listed in paragraph (j) of this section.

(e) A refiner who qualifies as a small refiner under this section and subsequently fails to meet all of the qualifying criteria as set out in paragraph (a) of this section will have its small refiner exemption terminated effective January 1 of the next calendar year.

(1) In the event such disqualification occurs, the refiner shall notify EPA in writing no later than 20 days following the disqualifying event.

(2) Disqualification under this paragraph (e) shall not apply in the case of a merger between two approved small refiners.

(f) If EPA finds that a refiner provided false or inaccurate information in its small refiner status verification letter under this subpart, the small refiner's exemption will be void as of the effective date of these regulations.

(g) If a small refiner is complying on an aggregate basis for multiple refineries, the refiner may exempt the refineries from the calculation of its Renewable Volume Obligation under § 80.1107.

(h)(1) A refiner may, at any time, waive the small refiner exemption under paragraph (a) of this section upon notification to EPA.

(2) A refiner's notice to EPA that it intends to waive the small refiner exemption must be received by November 1 in order for the waiver to be effective for the following calendar year. The waiver will be effective beginning on January 1 of the following calendar year, at which point the refiner will be subject to the renewable fuel standard of § 80.1105.

(3) The waiver must be sent to EPA at one of the addresses listed in paragraph (j) of this section.

(i) Any refiner that acquires a refinery from another refiner with approved small refiner status under paragraph (a) of this section shall notify EPA in writing no later than 20 days following the acquisition.

(j) Verification letters under paragraph (b) of this section and small refiner exemption waivers under paragraph (h) of this section shall be sent to one of the following addresses:

(1) *For U.S. Mail:* U.S. EPA—Attn: RFS Program, 6406J, 1200 Pennsylvania Avenue, NW., Washington, DC 20460.

(2) *For overnight or courier services:* U.S. EPA, Attn: RFS Program, 6406J, 1310 L Street, NW., 6th floor, Washington, DC 20005.

[72 FR 23999, May 1, 2007, as amended at 73 FR 57256, Oct. 2, 2008]

§ 80.1143 What are the opt-in provisions for noncontiguous states and territories?

(a) A noncontiguous state or United States territory may petition the Administrator to opt-in to the program requirements of this subpart.

(b) The Administrator will approve the petition if it meets the provisions of paragraphs (c) and (d) of this section.

(c) The petition must be signed by the Governor of the state or his authorized representative (or the equivalent official of the territory).

(d)(1) A petition submitted under this section must be received by the Agency by November 1 for the state or territory to be included in the RFS program in the next calendar year.

(2) A petition submitted under this section should be sent to either of the following addresses:

(i) *For U.S. Mail:* U.S. EPA—Attn: RFS Program, 6406J, 1200 Pennsylvania Avenue, NW., Washington, DC 20460.

(ii) *For overnight or courier services:* U.S. EPA, Attn: RFS Program, 6406J, 1310 L Street, NW., 6th floor, Washington, DC 20005.

(e) Upon approval of the petition by the Administrator:

(1) EPA shall calculate the standard for the following year, including the total gasoline volume for the State or territory in question.

(2) Beginning on January 1 of the next calendar year, all gasoline refiners and importers in the state or territory for which a petition has been approved shall be obligated parties as defined in § 80.1106.

(3) Beginning on January 1 of the next calendar year, all renewable fuel producers in the State or territory for which a petition has been approved shall, pursuant to § 80.1126(a)(2), be required to generate RINs and assign them to batches of renewable fuel.

[72 FR 23999, May 1, 2007]

§§ 80.1144–80.1149 [Reserved]

§ 80.1150 What are the registration requirements under the RFS program?

(a) Any obligated party described in § 80.1106 and any exporter of renewable fuel described in § 80.1130 must provide EPA with the information specified for registration under § 80.76, if such information has not already been provided under the provisions of this part. An obligated party or an exporter of renewable fuel must receive EPA-issued identification numbers prior to engaging in any transaction involving RINs. Registration information may be submitted to EPA at any time after promulgation of this rule in the FEDERAL REGISTER.

(b) Any importer or producer of a renewable fuel must provide EPA the information specified under § 80.76, if such information has not already been provided under the provisions of this part, and must receive EPA-issued company and facility identification numbers prior to generating or assigning any RINs. Registration information may be submitted to EPA at any time after promulgation of this rule in the FEDERAL REGISTER.

(c) Any party who owns or intends to own RINs, but who is not covered by paragraphs (a) and (b) of this section, must provide EPA the information specified under § 80.76, if such information has not already been provided under the provisions of this part and must receive an EPA-issued company identification number prior to owning any RINs. Registration information may be submitted to EPA at any time after promulgation of this rule in the FEDERAL REGISTER.

(d) Registration shall be on forms, and following policies, established by the Administrator.

[72 FR 24000, May 1, 2007]

§ 80.1151 What are the recordkeeping requirements under the RFS program?

(a) Beginning September 1, 2007, any obligated party (as described at § 80.1106) or exporter of renewable fuel (as described at § 80.1130) must keep all of the following records:

(1) Product transfer documents consistent with § 80.1153 and associated with the obligated party's activity, if any, as transferor or transferee of renewable fuel.

(2) Copies of all reports submitted to EPA under § 80.1152(a).

(3) Records related to each RIN transaction, which includes all the following:

(i) A list of the RINs owned, purchased, sold, or retired.

(ii) The parties involved in each RIN transaction including the transferor, transferee, and any broker or agent.

(iii) The date of the transfer of the RIN(s).

(iv) Additional information related to details of the transaction and its terms.

(4) Records related to the use of RINs (by facility, if applicable) for compliance, which includes all the following:

(i) Methods and variables used to calculate the Renewable Volume Obligation pursuant to § 80.1107 or § 80.1130.

(ii) List of RINs used to demonstrate compliance.

(iii) Additional information related to details of RIN use for compliance.

(b) Beginning September 1, 2007, any producer or importer of a renewable fuel as defined at § 80.1101(d) must keep all of the following records:

(1) Product transfer documents consistent with § 80.1153 and associated with the renewable fuel producer's or importer's activity, if any, as transferor or transferee of renewable fuel.

(2) Copies of all reports submitted to EPA under § 80.1152(b).

(3) Records related to the generation and assignment of RINs for each facility, including all of the following:

(i) Batch volume in gallons.

(ii) Batch number.

(iii) RIN number as assigned under § 80.1126.

(iv) Identification of batches meeting the definition of cellulosic biomass ethanol.

(v) Date of production or import.

(vi) Results of any laboratory analysis of batch chemical composition or physical properties.

(vii) Additional information related to details of RIN generation.

(4) Records related to each RIN transaction, including all of the following:

(i) A list of the RINs owned, purchased, sold, or retired.

(ii) The parties involved in each transaction including the transferor, transferee, and any broker or agent.

(iii) The date of the transfer of the RIN(s).

(iv) Additional information related to details of the transaction and its terms.

(5) Records related to the production, importation, ownership, sale or use of any volume of neat renewable fuel that any party designates as motor vehicle fuel and uses as motor vehicle fuel.

(c) Beginning September 1, 2007, any producer of a renewable fuel defined at § 80.1101(d) must keep verifiable records of the following:

(1) The amount and type of fossil fuel and waste material-derived fuel used in producing on-site thermal energy dedicated to the production of ethanol at plants producing cellulosic biomass ethanol through the displacement of 90 percent or more of the fossil fuel normally used in the production of ethanol, as described at § 80.1101(a)(2).

(2) The amount and type of feedstocks used in producing cellulosic biomass ethanol as defined in § 80.1101(a)(1).

(3) The equivalent amount of fossil fuel (based on reasonable estimates) associated with the use of off-site generated waste heat that is used in the production of ethanol at plants producing cellulosic biomass ethanol through the displacement of 90 percent or more of the fossil fuel normally used in the production of ethanol, as described at § 80.1101(a)(2).

(4) The plot plan and process flow diagram for plants producing cellulosic biomass and waste derived ethanol as defined in § 80.1101(a) and (b), respectively.

(5) The independent third party verification required under § 80.1155 for producers of cellulosic biomass ethanol and waste derived ethanol.

(d) Beginning September 1, 2007, any party, other than those parties covered in paragraphs (a) and (b) of this section, that owns RINs must keep all of the following records:

(1) Product transfer documents consistent with § 80.1153 and associated with the party's activity, if any, as transferor or transferee of renewable fuel.

(2) Copies of all reports submitted to EPA under § 80.1152(c).

(3) Records related to each RIN transaction, including all of the following:

(i) A list of the RINs owned, purchased, sold or retired.

(ii) The parties involved in each RIN transaction including the transferor, transferee, and any broker or agent.

(iii) The date of the transfer of the RIN(s).

(iv) Additional information related to details of the transaction and its terms.

(e) The records required under this section and under § 80.1153 shall be kept for five years from the date they were created, except that records related to transactions involving RINs shall be kept for five years from the date of transfer.

(f) On request by EPA, the records required under this section and under § 80.1153 must be made available to the Administrator or the Administrator's authorized representative. For records that are electronically generated or maintained, the equipment or software necessary to read the records shall be made available; or, if requested by EPA, electronic records shall be converted to paper documents.

[72 FR 24000, May 1, 2007, as amended at 73 FR 57256, Oct. 2, 2008; 74 FR 29952, June 24, 2009]

§ 80.1152 What are the reporting requirements under the RFS program?

(a) Any obligated party described in § 80.1106 or exporter of renewable fuel described in § 80.1130 must submit to EPA reports according to the schedule, and containing the information, that is set forth in this paragraph (a).

(1) An annual compliance demonstration report for the previous compliance period shall be submitted every February 28, except as noted in paragraph (a)(1)(x) of this section, and shall include all of the following information:

(i) The obligated party's name.

(ii) The EPA company registration number.

(iii) Whether the party is complying on a corporate (aggregate) or facility-by-facility basis.

(iv) The EPA facility registration number, if complying on a facility-by-facility basis.

(v) The production volume of all of the products listed in § 80.1107(c) for the reporting year.

(vi) The renewable volume obligation (RVO), as defined in § 80.1127(a) for obligated parties and § 80.1130(b) for exporters of renewable fuel, for the reporting year.

(vii) Any deficit RVO carried over from the previous year.

(viii) The total current-year gallon-RINs used for compliance.

(ix) The total prior-years gallon-RINs used for compliance.

(x) A list of all RINs used for compliance in the reporting year. For compliance demonstrations covering calendar year 2007 only, this list shall be reported by May 31, 2008. In all subsequent years, this list shall be submitted by February 28.

(xi) Any deficit RVO carried into the subsequent year.

(xii) Any additional information that the Administrator may require.

(2) The quarterly RIN transaction reports required under paragraph (c)(1) of this section.

(3) The quarterly gallon-RIN activity reports required under paragraph (c)(2) of this section.

(4) Reports required under this paragraph (a) must be signed and certified as meeting all the applicable requirements of this subpart by the owner or a responsible corporate officer of the obligated party.

(b) Any producer or importer of a renewable fuel must, beginning November 30, 2007, submit to EPA reports according to the schedule, and containing the information, that is set forth in this paragraph (b).

(1) A quarterly RIN-generation report for each facility owned by the renewable fuel producer, and each importer, shall be submitted according to the schedule specified in paragraph (d) of this section, and shall include for the reporting period all of the following information for each batch of renewable fuel produced or imported, where ''batch'' means a discreet quantity of renewable fuel produced or imported and assigned a unique RIN:

(i) The renewable fuel producer's or importer's name.

(ii) The EPA company registration number.

(iii) The EPA facility registration number.

(iv) The applicable quarterly reporting period.

(v) The RINs generated for each batch according to § 80.1126.

(vi) The production date of each batch.

(vii) The type of renewable fuel of each batch, as defined in § 80.1101(d).

(viii) Information related to the volume of denaturant and applicable equivalence value of each batch.

(ix) The volume of each batch produced or imported.

(x) Any additional information the Administrator may require.

(2) The RIN transaction reports required under paragraph (c)(1) of this section.

(3) The quarterly gallon-RIN activity report required under paragraph (c)(2) of this section.

(4) Reports required under this paragraph (b) must be signed and certified as meeting all the applicable requirements of this subpart by the owner or a responsible corporate officer of the renewable fuel producer.

(c) Any party, including any party specified in paragraphs (a) and (b) of this section, that owns RINs during a reporting period must, beginning November 30, 2007, submit reports to EPA according to the schedule, and containing the information, that is set forth in this paragraph (c).

(1) A RIN transaction report for each RIN transaction shall be submitted by the end of the quarter in which the transaction occurred, according to the schedule specified in paragraph (d) of this section. Each report shall include all of the following:

(i) The submitting party's name.

(ii) The party's EPA company registration number.

(iii) [Reserved]

(iv) The applicable quarterly reporting period.

(v) Transaction type (RIN purchase, RIN sale, retired RIN).

(vi) Transaction date.

(vii) For a RIN purchase or sale, the trading partner's name.

(viii) For a RIN purchase or sale, the trading partner's EPA company registration number. For all other transactions, the submitting party's EPA company registration number.

(ix) RIN subject to the transaction.

(x) For a retired RIN, the reason for retiring the RIN (*e.g.*, reportable spill under § 80.1132, import volume correction under § 80.1166(k), renewable fuel used in boiler or heater under § 80.1129(e), enforcement obligation).

(xi) Any additional information that the Administrator may require.

(2) A quarterly gallon-RIN activity report shall be submitted to EPA according to the schedule specified in paragraph (d) of this section. Each report shall summarize gallon-RIN activities for the reporting period, separately for RINs assigned to a renewable fuel volume and RINs separated from a renewable fuel volume. The quarterly gallon-RIN activity report shall include all of the following information:

(i) The submitting party's name.

(ii) The party's EPA company registration number.

(iii) The number of current-year gallon-RINs owned at the start of the quarter.

(iv) The number of prior-year gallon-RINs owned at the start of the quarter.

(v) The total current-year gallon-RINs purchased.

(vi) The total prior-year gallon-RINs purchased.

(vii) The total current-year gallon-RINs sold.

(viii) The total prior-year gallon-RINs sold.

(ix) The total current-year gallon-RINs retired.

(x) The total prior-year gallon-RINs retired.

(xi) The number of current-year gallon-RINs owned at the end of the quarter.

(xii) The number of prior-year gallon-RINs owned at the end of the quarter.

(xiii) For parties reporting gallon-RIN activity under this paragraph for RINs assigned to a volume of renewable fuel, the total volume of renewable fuel (in gallons) owned at the end of the quarter.

(xiv) Any additional information that the Administrator may require.

(3) All reports required under this paragraph (c) must be signed and certified as meeting all the applicable requirements of this subpart by the RIN owner or a responsible corporate officer of the RIN owner.

(d) Quarterly reports shall be submitted to EPA by: May 31st for the first calendar quarter of January through March; August 31st for the second calendar quarter of April through June; November 30th for the third calendar quarter of July through September; and February 28th for the fourth calendar quarter of October through December. For 2007, quarterly reports shall commence on November 30, 2007.

(e) Reports required under this section shall be submitted on forms and following procedures as prescribed by EPA.

[72 FR 24000, May 1, 2007, as amended at 73 FR 57256, Oct. 2, 2008]

§ 80.1153 What are the product transfer document (PTD) requirements for the RFS program?

(a) Any time that a person transfers ownership of renewable fuels subject to this subpart, the transferor must provide to the transferee documents identifying the renewable fuel and any assigned RINs which include all of the following information as applicable:

(1) The name and address of the transferor and transferee.

(2) The transferor's and transferee's EPA company registration number.

(3) The volume of renewable fuel that is being transferred.

(4) The date of the transfer.

(5) Whether any RINs are assigned to the volume, as follows:

(i) If the assigned RINs are being transferred on the same PTD used to transfer ownership of the renewable fuel, then the assigned RINs shall be listed on the PTD.

(ii) If the assigned RINs are being transferred on a separate PTD from that which is used to transfer ownership of the renewable fuel, then the PTD which is used to transfer ownership of the renewable fuel shall state

the number of gallon-RINs being transferred as well as a unique reference to the PTD which is transferring the assigned RINs.

(iii) If no assigned RINs are being transferred with the renewable fuel, the PTD which is used to transfer ownership of the renewable fuel shall state ''No assigned RINs transferred''.

(b) Except for transfers to truck carriers, retailers, or wholesale purchaser-consumers, product codes may be used to convey the information required under paragraphs (a)(1) through (a)(4) of this section if such codes are clearly understood by each transferee. The RIN number required under paragraph (a)(5) of this section must always appear in its entirety.

[72 FR 24000, May 1, 2007, as amended at 73 FR 57257, Oct. 2, 2008]

§ 80.1154 What are the provisions for renewable fuel producers and importers who produce or import less than 10,000 gallons of renewable fuel per year?

(a) Renewable fuel producers located within the United States that produce less than 10,000 gallons of renewable fuel each year, and importers who import less than 10,000 gallons of renewable fuel each year, are not required to generate RINs or to assign RINs to batches of renewable fuel. Such producers and importers that do not generate and/or assign RINs to batches of renewable fuel are also exempt from all the following requirements of this subpart K, except as stated in paragraph (b) of this section:

(1) The registration requirements of § 80.1150.

(2) The recordkeeping requirements of § 80.1151.

(3) The reporting requirements of § 80.1152.

(4) The attest engagement requirements of § 80.1164.

(b) Renewable fuel producers and importers who produce or import less than 10,000 gallons of renewable fuel each year and that generate and/or assign RINs to batches of renewable fuel are subject to the provisions of §§ 80.1150 through 80.1152, and § 80.1164.

[72 FR 24000, May 1, 2007, as amended at 73 FR 57257, Oct. 2, 2008]

§ 80.1155 What are the additional requirements for a producer of cellulosic biomass ethanol or waste derived ethanol?

(a) A producer of cellulosic biomass ethanol or waste derived ethanol (hereinafter referred to as ''ethanol producer'' under this section) is required to arrange for an independent third party to review the records required in § 80.1151(c) and provide the ethanol producer with a written verification that the records support a claim that:

(1) The ethanol producer's facility is a facility that has the capability of producing cellulosic biomass ethanol as defined in § 80.1101(a) or waste derived ethanol as defined in § 80.1101(b); and

(2) The ethanol producer produces cellulosic biomass ethanol as defined in § 80.1101(a) or waste derived ethanol as defined in § 80.1101(b).

(b) The verifications required under paragraph (a) of this section must be conducted by a Professional Chemical Engineer who is based in the United States and is licensed by the appropriate state agency, unless the ethanol producer is a foreign producer subject to § 80.1166.

(c) To be considered an independent third party under paragraph (a) of this section:

(1) The third party shall not be operated by the ethanol producer or any subsidiary of employee of the ethanol producer.

(2) The third party shall be free from any interest in the ethanol producer's business.

(3) The ethanol producer shall be free from any interest in the third party's business.

(4) Use of a third party that is debarred, suspended, or proposed for debarment pursuant to the Government-wide Debarment and Suspension regulations, 40 CFR part 32, or the Debarment, Suspension and Ineligibility provisions of the Federal Acquisition Regulations, 48 CFR, part 9, subpart 9.4, shall be deemed noncompliance with the requirements of this section.

(d) The ethanol producer must obtain the written verification required under paragraph (a)(1) of this section by February 28 of the year following the first year in which the ethanol producer

claims to be producing cellulosic biomass ethanol or waste derived ethanol.

(e) The verification in paragraph (a)(2) of this section is required for each calendar year that the ethanol producer claims to be producing cellulosic biomass ethanol or waste derived ethanol. The ethanol producer must obtain the written verification required under paragraph (a)(2) of this section by February 28 for the previous calendar year.

(f) The ethanol producer must retain records of the verifications required under paragraph (a) of this section, as required in § 80.1151(c)(5).

(g) The independent third party shall retain all records pertaining to the verification required under this section for a period of five years from the date of creation and shall deliver such records to the Administrator upon request.

[72 FR 24000, May 1, 2007]

§§ 80.1156–80.1159 [Reserved]

§ 80.1160 What acts are prohibited under the RFS program?

(a) *Renewable fuel producer or importer violation*. Except as provided in § 80.1154, no person shall produce or import a renewable fuel without generating a batch-RIN as required under § 80.1126.

(b) *RIN generation and transfer violations*. No person shall do any of the following:

(1) Improperly generate a RIN (e.g., generate a RIN for which the applicable renewable fuel volume was not produced).

(2) Create or transfer to any person a RIN that is invalid under § 80.1131.

(3) Transfer to any person a RIN that is not properly identified as required under § 80.1125.

(4) Transfer to any person a RIN with a K code of 1 without transferring an appropriate volume of renewable fuel to the same person on the same day.

(c) *RIN use violations*. No person shall do any of the following:

(1) Fail to acquire sufficient RINs, or use invalid RINs, to meet the party's renewable fuel volume obligation under § 80.1127.

(2) Fail to acquire sufficient RINs to meet the party's renewable fuel volume obligation under § 80.1130.

(3) Use a validly generated RIN to meet the party's renewable fuel volume obligation under § 80.1127, or separate and transfer a validly generated RIN, where the party ultimately uses the renewable fuel volume associated with the RIN in a heater or boiler.

(d) *RIN retention violation*. No person shall retain RINs in violation of the requirements in § 80.1128(a)(5).

(e) *Causing a violation*. No person shall cause another person to commit an act in violation of any prohibited act under this section.

(f) *Failure to meet a requirement*. No person shall fail to meet any requirement that applies to that person under this subpart.

[72 FR 24003, May 1, 2007, as amended at 73 FR 57257, Oct. 2, 2008]

§ 80.1161 Who is liable for violations under the RFS program?

(a) *Persons liable for violations of prohibited acts*. (1) Any person who violates a prohibition under § 80.1160(a) through (d) is liable for the violation of that prohibition.

(2) Any person who causes another person to violate a prohibition under § 80.1160(a) through (d) is liable for a violation of § 80.1160(e).

(b) *Persons liable for failure to meet other provisions of this subpart*. (1) Any person who fails to meet a requirement of any provision of this subpart is liable for a violation of that provision.

(2) Any person who causes another person to fail to meet a requirement of any provision of this subpart is liable for causing a violation of that provision.

(c) *Parent corporation liability*. Any parent corporation is liable for any violation of this subpart that is committed by any of its subsidiaries.

(d) *Joint venture liability*. Each partner to a joint venture is jointly and severally liable for any violation of this subpart that is committed by the joint venture operation.

[72 FR 24003, May 1, 2007]

§ 80.1162 [Reserved]

§ 80.1163 What penalties apply under the RFS program?

(a) Any person who is liable for a violation under § 80.1161 is subject to a

civil penalty of up to $32,500, as specified in sections 205 and 211(d) of the Clean Air Act, for every day of each such violation and the amount of economic benefit or savings resulting from each violation.

(b) Any person liable under § 80.1161(a) for a violation of § 80.1160(c) for failure to meet a renewable volume obligation, or § 80.1160(e) for causing another party to fail to meet a renewable volume obligation, during any averaging period, is subject to a separate day of violation for each day in the averaging period.

(c) Any person liable under § 80.1161(b) for failure to meet, or causing a failure to meet, a requirement of any provision of this subpart is liable for a separate day of violation for each day such a requirement remains unfulfilled.

[72 FR 24004, May 1, 2007]

§ 80.1164 What are the attest engagement requirements under the RFS program?

The requirements regarding annual attest engagements in §§ 80.125 through 80.127, and 80.130, also apply to any attest engagement procedures required under this subpart. In addition to any other applicable attest engagement procedures, the following annual attest engagement procedures are required under this subpart.

(a) The following attest procedures shall be completed for any obligated party as stated in § 80.1106(a) or exporter of renewable fuel that is subject to the renewable fuel standard under § 80.1105:

(1) *Annual compliance demonstration report*. (i) Obtain and read a copy of the annual compliance demonstration report required under § 80.1152(a)(1) which contains information regarding all the following:

(A) The obligated party's volume of finished gasoline, reformulated gasoline blendstock for oxygenate blending (RBOB), and conventional gasoline blendstock that becomes finished conventional gasoline upon the addition of oxygenate (CBOB) produced or imported during the reporting year.

(B) Renewable volume obligation (RVO).

(C) RINs used for compliance.

(ii) Obtain documentation of any volumes of renewable fuel used in gasoline at the refinery or import facility or exported during the reporting year; compute and report as a finding the total volumes of renewable fuel represented in these documents.

(iii) Compare the volumes of gasoline reported to EPA in the report required under § 80.1152(a)(1) with the volumes, excluding any renewable fuel volumes, contained in the inventory reconciliation analysis under § 80.133, and verify that the volumes reported to EPA agree with the volumes in the inventory reconciliation analysis.

(iv) Compute and report as a finding the obligated party's or exporter's RVO, and any deficit RVO carried over from the previous year or carried into the subsequent year, and verify that the values agree with the values reported to EPA.

(v) Obtain the database, spreadsheet, or other documentation for all RINs used for compliance during the year being reviewed; calculate the total number of RINs used for compliance by year of generation represented in these documents; state whether this information agrees with the report to EPA and report as a finding any exceptions.

(vi) Identify a representative sample, selected in accordance with the guidelines in § 80.127, of RINs used for compliance during the year being reviewed.

(vii) Obtain contracts, invoices or other documentation for RINs in the representative sample obtained in paragraph (a)(1)(vi) of this section, and the product transfer documents for the RINs in the representative sample; state whether the information in these documents agrees with the information in the party's report to EPA and report as a finding any exceptions.

(viii) Verify that the product transfer documents for the representative sample of RINs used for compliance contain the applicable information required under § 80.1153 and report as a finding any product transfer document that does not contain the required information; verify the accuracy of the information contained in the product transfer documents for the representative sample and report as a finding any exceptions.

(2) *RIN transaction reports.* (i) Identify a representative sample, selected in accordance with the guidelines in § 80.127, separately for each RIN transaction type (RINs purchased, RINs sold, RINs retired) included in the RIN transaction reports required under § 80.1152(a)(2) for the compliance year.

(ii) Obtain contracts, invoices, or other documentation for each of the representative samples of RIN transactions, and the product transfer documents for each of the representative samples of RIN transactions; compute the transaction types, transaction dates, and RINs traded; state whether the information agrees with the party's reports to EPA and report as a finding any exceptions.

(iii) Verify that the product transfer documents for the representative sample of RINs sold and the representative sample of RINs purchased contain the applicable information required under § 80.1153 and report as a finding any product transfer document that does not contain the required information; verify the accuracy of the information contained in the product transfer documents for the representative samples and report as a finding any exceptions.

(3) *Gallon-RIN activity reports.* (i) Obtain and read copies of all quarterly gallon-RIN activity reports required under § 80.1152(a)(3) for the compliance year.

(ii) Obtain the database, spreadsheet, or other documentation used to generate the information in the gallon-RIN activity reports; compare the RIN transaction samples reviewed under paragraph (a)(2) of this section with the corresponding entries in the database or spreadsheet and report as a finding any discrepancies; compute the total number of current-year and prior-year gallon-RINs owned at the start and end of the quarter, purchased, sold and retired, and for parties that reported gallon-RIN activity for RINs assigned to a volume of renewable fuel, the volume of renewable fuel owned at the end of the quarter, as represented in these documents; and state whether this information agrees with the party's reports to EPA.

(b) The following attest procedures shall be completed for any renewable fuel producer or importer:

(1) *RIN-generation reports.* (i) Obtain and read copies of the quarterly RIN generation reports required under § 80.1152(b)(1) for the compliance year.

(ii) Obtain production data for each renewable fuel batch produced or imported during the year being reviewed; compute the RIN numbers, production dates, types, volumes of denaturant and applicable equivalence values, and production volumes for each batch; state whether this information agrees with the party's reports to EPA and report as a finding any exceptions.

(iii) Verify that the proper number of RINs were generated and assigned for each batch of renewable fuel produced or imported, as required under § 80.1126.

(iv) Identify a representative sample, selected in accordance with the guidelines in § 80.127, of renewable fuel batches produced or imported during the year being reviewed; obtain product transfer documents for the representative sample; verify that the product transfer documents contain the applicable information required under § 80.1153; verify the accuracy of the information contained in the product transfer documents; report as a finding any product transfer document that does not contain the applicable information required under § 80.1153.

(2) *RIN transaction reports.* (i) Identify a representative sample, selected in accordance with the guidelines in § 80.127, separately for each transaction type (RINs purchased, RINs sold, RINs retired) included in the RIN transaction reports required under § 80.1152(b)(2) for the compliance year.

(ii) Obtain contracts, invoices, or other documentation for each of the representative samples of RIN transactions, and the product transfer documents for each of the representative samples of RIN transactions; compute the transaction types, transaction dates, and the RINs traded; state whether this information agrees with the party's reports to EPA and report as a finding any exceptions.

(iii) Verify that the product transfer documents for the representative sample of RINs sold and the representative sample of RINs purchased contain the applicable information required under § 80.1153 and report as a finding any product transfer document that does

not contain the required information; verify the accuracy of the information contained in the product transfer documents for the representative samples and report as a finding any exceptions.

(3) *Gallon-RIN activity reports.* (i) Obtain and read copies of the quarterly gallon-RIN activity reports required under § 80.1152(b)(3) for the compliance year.

(ii) Obtain the database, spreadsheet, or other documentation used to generate the information in the gallon-RIN activity reports; compare the RIN transaction samples reviewed under paragraph (b)(2) of this section with the corresponding entries in the data base or spreadsheet and report as a finding any discrepancies; compute the total number of current-year and prior-year gallon-RINs owned at the start and end of the quarter, purchased, sold and retired, and for parties that reported gallon-RIN activity for RINs assigned to a volume of renewable fuel, the volume of renewable fuel owned at the end of the quarter, as represented in these documents; and state whether this information agrees with the party's reports to EPA.

(c) The following attest procedures shall be completed for any party other than an obligated party or renewable fuel producer or importer that owns any RINs during a calendar year.

(1) *RIN transaction reports.* (i) Identify a representative sample, selected in accordance with the guidelines in § 80.127, separately for each RIN transaction type (RINs purchased, RINs sold, RINs retired) included in the RIN transaction reports required under § 80.1152(c)(1) for the compliance year.

(ii) Obtain contracts, invoices, or other documentation for the representative samples of RIN transactions, and the product transfer documents for the representative samples of RIN transactions; compute the transaction types, transaction dates, and the RINs traded; state whether this information agrees with the party's reports to EPA and report as a finding any exceptions.

(iii) Verify that the transfer documents for the representative sample of RINs sold and the representative sample of RINs purchased contain the applicable information required under § 80.1153 and report as a finding any product transfer document that does not contain the required information; verify the accuracy of the information contained in the product transfer documents for the representative samples and report as a finding any exceptions.

(2) *Gallon-RIN activity reports.* (i) Obtain and read copies of the gallon-RIN activity reports required under § 80.1152(c)(2) for the compliance year.

(ii) Obtain the database, spreadsheet, or other documentation used to generate the information in the gallon-RIN activity reports; compare the RIN transaction samples reviewed under paragraph (c)(1) of this section with the corresponding entries in the data base or spreadsheet and report as a finding any discrepancies; compute the total number of current-year and prior-year gallon-RINs owned at the start and end of the quarter, purchased, sold and retired, and for parties that reported gallon-RIN activity for RINs assigned to a volume of renewable fuel, the volume of renewable fuel owned at the end of the quarter, as represented in these documents; and state whether this information agrees with the party's reports to EPA.

(d) The following submission dates apply to the attest engagements required under this section. (1) For each compliance year, each party subject to the attest engagement requirements under this section shall cause the reports required under this section to be submitted to EPA by May 31 of the year following the compliance year.

(2) For the 2007 compliance year only, the attest engagement required under paragraph (a) of this section may be submitted to EPA with the attest engagement for the 2008 compliance year.

(e) The party conducting the procedures under this section shall obtain a written representation from a company representative that the copies of the reports required by this section are complete and accurate copies of the reports filed with EPA.

(f) The party conducting the procedures under this section shall identify and report as a finding the commercial computer program used by the party to track the data required by the regulations in this subpart, if any.

[72 FR 24004, May 1, 2007, as amended at 73 FR 57257, Oct. 2, 2008]

§ 80.1165 What are the additional requirements under this subpart for a foreign small refiner?

(a) *Definitions.* The following definitions apply for this subpart:

(1) *Foreign refinery* is a refinery that is located outside the United States, the Commonwealth of Puerto Rico, the U.S. Virgin Islands, Guam, American Samoa, and the Commonwealth of the Northern Mariana Islands (collectively referred to in this section as ''the United States'').

(2) *Foreign refiner* is a person that meets the definition of refiner under § 80.2(i) for a foreign refinery.

(3) *RFS–FRGAS* is gasoline produced at a foreign refinery that has received a small refinery exemption under § 80.1141 or a small refiner exemption under § 80.1142 that is imported into the United States.

(4) *Non-RFS–FRGAS* is one of the following:

(i) Gasoline produced at a foreign refinery that has received a small refinery exemption under § 80.1141 or a small refiner exemption under § 80.1142 that is not imported into the United States.

(ii) Gasoline produced at a foreign refinery that has not received a small refinery exemption under § 80.1141 or small refiner exemption under § 80.1142.

(5) A foreign small refiner is a foreign refiner that has received a small refinery exemption under § 80.1141 for one or more of its refineries or a small refiner exemption under § 80.1142.

(b) *General requirements for RFS–FRGAS foreign small refineries and small refiners.* (1) A foreign small refiner must designate, at the time of production, each batch of gasoline produced at the foreign refinery that is exported for use in the United States as RFS–FRGAS; and

(2) Meet all requirements that apply to refiners who have received a small refinery or small refiner exemption under this subpart.

(c) *Designation, foreign refiner certification, and product transfer documents.* (1) Any foreign small refiner must designate each batch of RFS–FRGAS as such at the time the gasoline is produced.

(2) On each occasion when RFS–FRGAS is loaded onto a vessel or other transportation mode for transport to the United States, the foreign refiner shall prepare a certification for each batch of RFS–FRGAS that meets all the following requirements:

(i) The certification shall include the report of the independent third party under paragraph (d) of this section, and all the following additional information:

(A) The name and EPA registration number of the refinery that produced the RFS–FRGAS.

(B) [Reserved]

(ii) The identification of the gasoline as RFS–FRGAS.

(iii) The volume of RFS–FRGAS being transported, in gallons.

(3) On each occasion when any person transfers custody or title to any RFS–FRGAS prior to its being imported into the United States, it must include all the following information as part of the product transfer document information:

(i) Designation of the gasoline as RFS–FRGAS.

(ii) The certification required under paragraph (c)(2) of this section.

(d) *Load port independent testing and refinery identification.* (1) On each occasion that RFS–FRGAS is loaded onto a vessel for transport to the United States the foreign small refiner shall have an independent third party do all the following:

(i) Inspect the vessel prior to loading and determine the volume of any tank bottoms.

(ii) Determine the volume of RFS–FRGAS loaded onto the vessel (exclusive of any tank bottoms before loading).

(iii) Obtain the EPA-assigned registration number of the foreign refinery.

(iv) Determine the name and country of registration of the vessel used to transport the RFS–FRGAS to the United States.

(v) Determine the date and time the vessel departs the port serving the foreign refinery.

(vi) Review original documents that reflect movement and storage of the RFS–FRGAS from the foreign refinery to the load port, and from this review determine:

(A) The refinery at which the RFS–FRGAS was produced; and

(B) That the RFS–FRGAS remained segregated from Non-RFS–FRGAS and other RFS–FRGAS produced at a different refinery.

(2) The independent third party shall submit a report to:

(i) The foreign small refiner containing the information required under paragraph (d)(1) of this section, to accompany the product transfer documents for the vessel; and

(ii) The Administrator containing the information required under paragraph (d)(1) of this section, within thirty days following the date of the independent third party's inspection. This report shall include a description of the method used to determine the identity of the refinery at which the gasoline was produced, assurance that the gasoline remained segregated as specified in paragraph (j)(1) of this section, and a description of the gasoline's movement and storage between production at the source refinery and vessel loading.

(3) The independent third party must:

(i) Be approved in advance by EPA, based on a demonstration of ability to perform the procedures required in this paragraph (d);

(ii) Be independent under the criteria specified in § 80.65(f)(2)(iii); and

(iii) Sign a commitment that contains the provisions specified in paragraph (f) of this section with regard to activities, facilities, and documents relevant to compliance with the requirements of this paragraph (d).

(e) *Comparison of load port and port of entry testing.* (1)(i) Any small foreign small refiner and any United States importer of RFS–FRGAS shall compare the results from the load port testing under paragraph (d) of this section, with the port of entry testing as reported under paragraph (k) of this section, for the volume of gasoline, except as specified in paragraph (e)(1)(ii) of this section.

(ii) Where a vessel transporting RFS–FRGAS off loads this gasoline at more than one United States port of entry, the requirements of paragraph (e)(1)(i) of this section do not apply at subsequent ports of entry if the United States importer obtains a certification from the vessel owner that the requirements of paragraph (e)(1)(i) of this section were met and that the vessel has not loaded any gasoline or blendstock between the first United States port of entry and the subsequent port of entry.

(2) If the temperature-corrected volumes determined at the port of entry and at the load port differ by more than one percent, the United States importer and the foreign small refiner shall not treat the gasoline as RFS–FRGAS and the importer shall include the volume of gasoline in the importer's RFS compliance calculations.

(f) *Foreign refiner commitments.* Any small foreign small refiner shall commit to and comply with the provisions contained in this paragraph (f) as a condition to being approved for a small refinery or small refiner exemption under this subpart.

(1) Any United States Environmental Protection Agency inspector or auditor must be given full, complete and immediate access to conduct inspections and audits of the foreign refinery.

(i) Inspections and audits may be either announced in advance by EPA, or unannounced.

(ii) Access will be provided to any location where:

(A) Gasoline is produced;

(B) Documents related to refinery operations are kept; and

(C) RFS–FRGAS is stored or transported between the foreign refinery and the United States, including storage tanks, vessels and pipelines.

(iii) Inspections and audits may be by EPA employees or contractors to EPA.

(iv) Any documents requested that are related to matters covered by inspections and audits must be provided to an EPA inspector or auditor on request.

(v) Inspections and audits by EPA may include review and copying of any documents related to all the following:

(A) The volume of RFS–FRGAS.

(B) The proper classification of gasoline as being RFS–FRGAS or as not being RFS–FRGAS.

(C) Transfers of title or custody to RFS–FRGAS.

(D) Testing of RFS–FRGAS.

(E) Work performed and reports prepared by independent third parties and by independent auditors under the requirements of this section, including work papers.

(vi) Inspections and audits by EPA may include interviewing employees.

(vii) Any employee of the foreign refiner must be made available for interview by the EPA inspector or auditor, on request, within a reasonable time period.

(viii) English language translations of any documents must be provided to an EPA inspector or auditor, on request, within 10 working days.

(ix) English language interpreters must be provided to accompany EPA inspectors and auditors, on request.

(2) An agent for service of process located in the District of Columbia shall be named, and service on this agent constitutes service on the foreign refiner or any employee of the foreign refiner for any action by EPA or otherwise by the United States related to the requirements of this subpart.

(3) The forum for any civil or criminal enforcement action related to the provisions of this section for violations of the Clean Air Act or regulations promulgated thereunder shall be governed by the Clean Air Act, including the EPA administrative forum where allowed under the Clean Air Act.

(4) United States substantive and procedural laws shall apply to any civil or criminal enforcement action against the foreign refiner or any employee of the foreign refiner related to the provisions of this section.

(5) Submitting an application for a small refinery or small refiner exemption, or producing and exporting gasoline under such exemption, and all other actions to comply with the requirements of this subpart relating to such exemption constitute actions or activities covered by and within the meaning of the provisions of 28 U.S.C. 1605(a)(2), but solely with respect to actions instituted against the foreign refiner, its agents and employees in any court or other tribunal in the United States for conduct that violates the requirements applicable to the foreign refiner under this subpart, including conduct that violates the False Statements Accountability Act of 1996 (18 U.S.C. 1001) and section 113(c)(2) of the Clean Air Act (42 U.S.C. 7413).

(6) The foreign refiner, or its agents or employees, will not seek to detain or to impose civil or criminal remedies against EPA inspectors or auditors, whether EPA employees or EPA contractors, for actions performed within the scope of EPA employment related to the provisions of this section.

(7) The commitment required by this paragraph (f) shall be signed by the owner or president of the foreign refiner business.

(8) In any case where RFS–FRGAS produced at a foreign refinery is stored or transported by another company between the refinery and the vessel that transports the RFS–FRGAS to the United States, the foreign refiner shall obtain from each such other company a commitment that meets the requirements specified in paragraphs (f)(1) through (f)(7) of this section, and these commitments shall be included in the foreign refiner's application for a small refinery or small refiner exemption under this subpart.

(g) *Sovereign immunity*. By submitting an application for a small refinery or small refiner exemption under this subpart, or by producing and exporting gasoline to the United States under such exemption, the foreign refiner, and its agents and employees, without exception, become subject to the full operation of the administrative and judicial enforcement powers and provisions of the United States without limitation based on sovereign immunity, with respect to actions instituted against the foreign refiner, its agents and employees in any court or other tribunal in the United States for conduct that violates the requirements applicable to the foreign refiner under this subpart, including conduct that violates the False Statements Accountability Act of 1996 (18 U.S.C. 1001) and section 113(c)(2) of the Clean Air Act (42 U.S.C. 7413).

(h) *Bond posting*. Any foreign refiner shall meet the requirements of this paragraph (h) as a condition to approval of a small foreign refinery or small foreign refiner exemption under this subpart.

(1) The foreign refiner shall post a bond of the amount calculated using the following equation:

$$\text{Bond} = G * \$0.01$$

Where:

Bond = amount of the bond in United States dollars.

G = the largest volume of gasoline produced at the foreign refinery and exported to the United States, in gallons, during a single calendar year among the most recent of the following calendar years, up to a maximum of five calendar years: The calendar year immediately preceding the date the refinery's application is submitted, the calendar year the application is submitted, and each succeeding calendar year.

(2) Bonds shall be posted by:

(i) Paying the amount of the bond to the Treasurer of the United States;

(ii) Obtaining a bond in the proper amount from a third party surety agent that is payable to satisfy United States administrative or judicial judgments against the foreign refiner, provided EPA agrees in advance as to the third party and the nature of the surety agreement; or

(iii) An alternative commitment that results in assets of an appropriate liquidity and value being readily available to the United States, provided EPA agrees in advance as to the alternative commitment.

(3) Bonds posted under this paragraph (h) shall:

(i) Be used to satisfy any judicial judgment that results from an administrative or judicial enforcement action for conduct in violation of this subpart, including where such conduct violates the False Statements Accountability Act of 1996 (18 U.S.C. 1001) and section 113(c)(2) of the Clean Air Act (42 U.S.C. 7413);

(ii) Be provided by a corporate surety that is listed in the United States Department of Treasury Circular 570 ''Companies Holding Certificates of Authority as Acceptable Sureties on Federal Bonds''; and

(iii) Include a commitment that the bond will remain in effect for at least five years following the end of latest annual reporting period that the foreign refiner produces gasoline pursuant to the requirements of this subpart.

(4) On any occasion a foreign refiner bond is used to satisfy any judgment, the foreign refiner shall increase the bond to cover the amount used within 90 days of the date the bond is used.

(5) If the bond amount for a foreign refiner increases, the foreign refiner shall increase the bond to cover the shortfall within 90 days of the date the bond amount changes. If the bond amount decreases, the foreign refiner may reduce the amount of the bond beginning 90 days after the date the bond amount changes.

(i) *English language reports.* Any document submitted to EPA by a foreign refiner shall be in English language, or shall include an English language translation.

(j) *Prohibitions.* (1) No person may combine RFS–FRGAS with any Non-RFS–FRGAS, and no person may combine RFS–FRGAS with any RFS–FRGAS produced at a different refinery, until the importer has met all the requirements of paragraph (k) of this section.

(2) No foreign refiner or other person may cause another person to commit an action prohibited in paragraph (j)(1) of this section, or that otherwise violates the requirements of this section.

(k) *United States importer requirements.* Any United States importer of RFS–FRGAS shall meet the following requirements:

(1) Each batch of imported RFS–FRGAS shall be classified by the importer as being RFS–FRGAS.

(2) Gasoline shall be classified as RFS–FRGAS according to the designation by the foreign refiner if this designation is supported by product transfer documents prepared by the foreign refiner as required in paragraph (c) of this section. Additionally, the importer shall comply with all requirements of this subpart applicable to importers.

(3) For each gasoline batch classified as RFS–FRGAS, any United States importer shall have an independent third party do all the following:

(i) Determine the volume of gasoline in the vessel.

(ii) Use the foreign refiner's RFS–FRGAS certification to determine the name and EPA-assigned registration number of the foreign refinery that produced the RFS–FRGAS.

(iii) Determine the name and country of registration of the vessel used to transport the RFS–FRGAS to the United States.

(iv) Determine the date and time the vessel arrives at the United States port of entry.

(4) Any importer shall submit reports within 30 days following the date any vessel transporting RFS–FRGAS arrives at the United States port of entry to:

(i) The Administrator containing the information determined under paragraph (k)(3) of this section; and

(ii) The foreign refiner containing the information determined under paragraph (k)(3)(i) of this section, and including identification of the port at which the product was off loaded.

(5) Any United States importer shall meet all other requirements of this subpart for any imported gasoline that is not classified as RFS–FRGAS under paragraph (k)(2) of this section.

(l) *Truck imports of RFS–FRGAS produced at a foreign refinery.* (1) Any refiner whose RFS–FRGAS is transported into the United States by truck may petition EPA to use alternative procedures to meet all the following requirements:

(i) Certification under paragraph (c)(2) of this section.

(ii) Load port and port of entry testing requirements under paragraphs (d) and (e) of this section.

(iii) Importer testing requirements under paragraph (k)(3) of this section.

(2) These alternative procedures must ensure RFS–FRGAS remains segregated from Non-RFS–FRGAS until it is imported into the United States. The petition will be evaluated based on whether it adequately addresses the following:

(i) Provisions for monitoring pipeline shipments, if applicable, from the refinery, that ensure segregation of RFS–FRGAS from that refinery from all other gasoline.

(ii) Contracts with any terminals and/or pipelines that receive and/or transport RFS–FRGAS that prohibit the commingling of RFS–FRGAS with Non-RFS–FRGAS or RFS–FRGAS from other foreign refineries.

(iii) Attest procedures to be conducted annually by an independent third party that review loading records and import documents based on volume reconciliation, or other criteria, to confirm that all RFS–FRGAS remains segregated throughout the distribution system.

(3) The petition described in this section must be submitted to EPA along with the application for a small refinery or small refiner exemption under this subpart.

(m) *Additional attest requirements for importers of RFS–FRGAS.* The following additional procedures shall be carried out by any importer of RFS–FRGAS as part of the attest engagement required for importers under this subpart K.

(1) Obtain listings of all tenders of RFS–FRGAS. Agree the total volume of tenders from the listings to the gasoline inventory reconciliation analysis required in § 80.133(b), and to the volumes determined by the third party under paragraph (d) of this section.

(2) For each tender under paragraph (m)(1) of this section, where the gasoline is loaded onto a marine vessel, report as a finding the name and country of registration of each vessel, and the volumes of RFS–FRGAS loaded onto each vessel.

(3) Select a sample from the list of vessels identified in paragraph (m)(2) of this section used to transport RFS–FRGAS, in accordance with the guidelines in § 80.127, and for each vessel selected perform the following:

(i) Obtain the report of the independent third party, under paragraph (d) of this section.

(A) Agree the information in these reports with regard to vessel identification and gasoline volume.

(B) Identify, and report as a finding, each occasion the load port and port of entry volume results differ by more than the amount allowed in paragraph (e)(2) of this section, and determine whether all of the requirements of paragraph (e)(2) of this section have been met.

(ii) Obtain the documents used by the independent third party to determine transportation and storage of the RFS–FRGAS from the refinery to the load port, under paragraph (d) of this section. Obtain tank activity records for any storage tank where the RFS–FRGAS is stored, and pipeline activity records for any pipeline used to transport the RFS–FRGAS prior to being loaded onto the vessel. Use these records to determine whether the RFS–FRGAS was produced at the refinery

that is the subject of the attest engagement, and whether the RFS–FRGAS was mixed with any Non-RFS–FRGAS or any RFS–FRGAS produced at a different refinery.

(4) Select a sample from the list of vessels identified in paragraph (m)(2) of this section used to transport RFS–FRGAS, in accordance with the guidelines in § 80.127, and for each vessel selected perform the following:

(i) Obtain a commercial document of general circulation that lists vessel arrivals and departures, and that includes the port and date of departure of the vessel, and the port of entry and date of arrival of the vessel.

(ii) Agree the vessel's departure and arrival locations and dates from the independent third party and United States importer reports to the information contained in the commercial document.

(5) Obtain separate listings of all tenders of RFS–FRGAS, and perform the following:

(i) Agree the volume of tenders from the listings to the gasoline inventory reconciliation analysis in § 80.133(b).

(ii) Obtain a separate listing of the tenders under this paragraph (m)(5) where the gasoline is loaded onto a marine vessel. Select a sample from this listing in accordance with the guidelines in § 80.127, and obtain a commercial document of general circulation that lists vessel arrivals and departures, and that includes the port and date of departure and the ports and dates where the gasoline was off loaded for the selected vessels. Determine and report as a finding the country where the gasoline was off loaded for each vessel selected.

(6) In order to complete the requirements of this paragraph (m), an auditor shall:

(i) Be independent of the foreign refiner or importer;

(ii) Be licensed as a Certified Public Accountant in the United States and a citizen of the United States, or be approved in advance by EPA based on a demonstration of ability to perform the procedures required in §§ 80.125 through 80.127, 80.130, 80.1164, and this paragraph (m); and

(iii) Sign a commitment that contains the provisions specified in paragraph (f) of this section with regard to activities and documents relevant to compliance with the requirements of §§ 80.125 through 80.127, 80.130, 80.1164, and this paragraph (m).

(n) *Withdrawal or suspension of foreign refiner status.* EPA may withdraw or suspend a foreign refiner's small refinery or small refiner exemption where:

(1) A foreign refiner fails to meet any requirement of this section;

(2) A foreign government fails to allow EPA inspections as provided in paragraph (f)(1) of this section;

(3) A foreign refiner asserts a claim of, or a right to claim, sovereign immunity in an action to enforce the requirements in this subpart; or

(4) A foreign refiner fails to pay a civil or criminal penalty that is not satisfied using the foreign refiner bond specified in paragraph (h) of this section.

(o) *Additional requirements for applications, reports and certificates.* Any application for a small refinery or small refiner exemption, alternative procedures under paragraph (l) of this section, any report, certification, or other submission required under this section shall be:

(1) Submitted in accordance with procedures specified by the Administrator, including use of any forms that may be specified by the Administrator.

(2) Signed by the president or owner of the foreign refiner company, or by that person's immediate designee, and shall contain the following declaration:

I hereby certify: (1) That I have actual authority to sign on behalf of and to bind [insert name of foreign refiner] with regard to all statements contained herein; (2) that I am aware that the information contained herein is being Certified, or submitted to the United States Environmental Protection Agency, under the requirements of 40 CFR part 80, subpart K, and that the information is material for determining compliance under these regulations; and (3) that I have read and understand the information being Certified or submitted, and this information is true, complete and correct to the best of my knowledge and belief after I have taken reasonable and appropriate steps to verify the accuracy thereof. I affirm that I have read and understand the provisions of 40 CFR part 80, subpart K, including 40 CFR 80.1165 apply to [insert name of foreign refiner]. Pursuant to Clean Air Act section 113(c) and 18 U.S.C. 1001, the penalty for furnishing

false, incomplete or misleading information in this certification or submission is a fine of up to $10,000 U.S., and/or imprisonment for up to five years.

[72 FR 24004, May 1, 2007, as amended at 73 FR 57258, Oct. 2, 2008]

§ 80.1166 What are the additional requirements under this subpart for a foreign producer of cellulosic biomass ethanol or waste derived ethanol?

(a) *Foreign producer of cellulosic biomass ethanol or waste derived ethanol.* For purposes of this subpart, a foreign producer of cellulosic biomass ethanol or waste derived ethanol is a person located outside the United States, the Commonwealth of Puerto Rico, the Virgin Islands, Guam, American Samoa, and the Commonwealth of the Northern Mariana Islands (collectively referred to in this section as ''the United States'') that has been approved by EPA to assign RINs to cellulosic biomass ethanol or waste derived ethanol that the foreign producer produces and exports to the United States, hereinafter referred to as a ''foreign producer'' under this section.

(b) *General requirements.* (1) An approved foreign producer under this section must meet all requirements that apply to cellulosic biomass ethanol or waste derived ethanol producers under this subpart, except to the extent otherwise specified in paragraph (b)(2) of this section.

(2)(i) The independent third party that conducts the facility verification required under § 80.1155(a) must inspect the foreign producer's facility and submit a report to EPA which describes in detail the physical plant and its operation.

(ii) The independent third party that conducts the facility verification required under § 80.1155(a) must be a licensed Professional Engineer in the chemical engineering field, but need not be based in the United States. The independent third party must include documentation of its qualifications as a licensed Professional Engineer in the report required in paragraph (b)(2)(i) of this section.

(iii) The requirements of paragraphs (b)(2)(i) and (ii) of this section must be met before a foreign entity may be approved as a foreign producer under this subpart.

(c) *Designation, foreign producer certification, and product transfer documents.* (1) Any approved foreign producer under this section must designate each batch of cellulosic biomass ethanol or waste derived ethanol as ''RFS–FRETH'' at the time the ethanol is produced.

(2) On each occasion when RFS–FRETH is loaded onto a vessel or other transportation mode for transport to the United States, the foreign producer shall prepare a certification for each batch of RFS–FRETH; the certification shall include the report of the independent third party under paragraph (d) of this section, and all the following additional information:

(i) The name and EPA registration number of the company that produced the RFS–FRETH.

(ii) The identification of the ethanol as RFS–FRETH.

(iii) The volume of RFS–FRETH being transported, in gallons.

(3) On each occasion when any person transfers custody or title to any RFS–FRETH prior to its being imported into the United States, it must include all the following information as part of the product transfer document information:

(i) Designation of the ethanol as RFS–FRETH.

(ii) The certification required under paragraph (c)(2) of this section.

(d) *Load port independent testing and refinery identification.* (1) On each occasion that RFS–FRETH is loaded onto a vessel for transport to the United States the foreign producer shall have an independent third party do all the following:

(i) Inspect the vessel prior to loading and determine the volume of any tank bottoms.

(ii) Determine the volume of RFS–FRETH loaded onto the vessel (exclusive of any tank bottoms before loading).

(iii) Obtain the EPA-assigned registration number of the foreign producer.

(iv) Determine the name and country of registration of the vessel used to transport the RFS–FRETH to the United States.

(v) Determine the date and time the vessel departs the port serving the foreign producer.

(vi) Review original documents that reflect movement and storage of the RFS–FRETH from the foreign producer to the load port, and from this review determine the following:

(A) The facility at which the RFS–FRETH was produced.

(B) That the RFS–FRETH remained segregated from Non-RFS–FRETH and other RFS–FRETH produced by a different foreign producer.

(2) The independent third party shall submit a report to the following:

(i) The foreign producer containing the information required under paragraph (d)(1) of this section, to accompany the product transfer documents for the vessel.

(ii) The Administrator containing the information required under paragraph (d)(1) of this section, within thirty days following the date of the independent third party's inspection. This report shall include a description of the method used to determine the identity of the foreign producer facility at which the ethanol was produced, assurance that the ethanol remained segregated as specified in paragraph (j)(1) of this section, and a description of the ethanol's movement and storage between production at the source facility and vessel loading.

(3) The independent third party must:

(i) Be approved in advance by EPA, based on a demonstration of ability to perform the procedures required in this paragraph (d);

(ii) Be independent under the criteria specified in § 80.65(e)(2)(iii); and

(iii) Sign a commitment that contains the provisions specified in paragraph (f) of this section with regard to activities, facilities and documents relevant to compliance with the requirements of this paragraph (d).

(e) *Comparison of load port and port of entry testing.* (1)(i) Any foreign producer and any United States importer of RFS–FRETH shall compare the results from the load port testing under paragraph (d) of this section, with the port of entry testing as reported under paragraph (k) of this section, for the volume of ethanol, except as specified in paragraph (e)(1)(ii) of this section.

(ii) Where a vessel transporting RFS–FRETH off loads the ethanol at more than one United States port of entry, the requirements of paragraph (e)(1)(i) of this section do not apply at subsequent ports of entry if the United States importer obtains a certification from the vessel owner that the requirements of paragraph (e)(1)(i) of this section were met and that the vessel has not loaded any ethanol between the first United States port of entry and the subsequent port of entry.

(2)(i) If the temperature-corrected volumes determined at the port of entry and at the load port differ by more than one percent, the number of RINs associated with the ethanol shall be calculated based on the lesser of the two volumes in paragraph (e)(1)(i) of this section.

(ii) Where the port of entry volume is the lesser of the two volumes in paragraph (e)(1)(i) of this section, the importer shall calculate the difference between the number of RINs originally assigned by the foreign producer and the number of RINs calculated under § 80.1126 for the volume of ethanol as measured at the port of entry, and retire that amount of RINs in accordance with paragraph (k)(4) of this section.

(f) *Foreign producer commitments.* Any foreign producer shall commit to and comply with the provisions contained in this paragraph (f) as a condition to being approved as a foreign producer under this subpart.

(1) Any United States Environmental Protection Agency inspector or auditor must be given full, complete and immediate access to conduct inspections and audits of the foreign producer facility.

(i) Inspections and audits may be either announced in advance by EPA, or unannounced.

(ii) Access will be provided to any location where:

(A) Ethanol is produced;

(B) Documents related to ethanol producer operations are kept; and

(C) RFS–FRETH is stored or transported between the foreign producer and the United States, including storage tanks, vessels and pipelines.

(iii) Inspections and audits may be by EPA employees or contractors to EPA.

(iv) Any documents requested that are related to matters covered by inspections and audits must be provided to an EPA inspector or auditor on request.

(v) Inspections and audits by EPA may include review and copying of any documents related to the following:

(A) The volume of RFS–FRETH.

(B) The proper classification of gasoline as being RFS–FRETH;

(C) Transfers of title or custody to RFS–FRETH.

(D) Work performed and reports prepared by independent third parties and by independent auditors under the requirements of this section, including work papers.

(vi) Inspections and audits by EPA may include interviewing employees.

(vii) Any employee of the foreign producer must be made available for interview by the EPA inspector or auditor, on request, within a reasonable time period.

(viii) English language translations of any documents must be provided to an EPA inspector or auditor, on request, within 10 working days.

(ix) English language interpreters must be provided to accompany EPA inspectors and auditors, on request.

(2) An agent for service of process located in the District of Columbia shall be named, and service on this agent constitutes service on the foreign producer or any employee of the foreign producer for any action by EPA or otherwise by the United States related to the requirements of this subpart.

(3) The forum for any civil or criminal enforcement action related to the provisions of this section for violations of the Clean Air Act or regulations promulgated thereunder shall be governed by the Clean Air Act, including the EPA administrative forum where allowed under the Clean Air Act.

(4) United States substantive and procedural laws shall apply to any civil or criminal enforcement action against the foreign producer or any employee of the foreign producer related to the provisions of this section.

(5) Applying to be an approved foreign producer under this section, or producing or exporting ethanol under such approval, and all other actions to comply with the requirements of this subpart relating to such approval constitute actions or activities covered by and within the meaning of the provisions of 28 U.S.C. 1605(a)(2), but solely with respect to actions instituted against the foreign producer, its agents and employees in any court or other tribunal in the United States for conduct that violates the requirements applicable to the foreign producer under this subpart, including conduct that violates the False Statements Accountability Act of 1996 (18 U.S.C. 1001) and section 113(c)(2) of the Clean Air Act (42 U.S.C. 7413).

(6) The foreign producer, or its agents or employees, will not seek to detain or to impose civil or criminal remedies against EPA inspectors or auditors, whether EPA employees or EPA contractors, for actions performed within the scope of EPA employment related to the provisions of this section.

(7) The commitment required by this paragraph (f) shall be signed by the owner or president of the foreign producer company.

(8) In any case where RFS–FRETH produced at a foreign producer facility is stored or transported by another company between the refinery and the vessel that transports the RFS–FRETH to the United States, the foreign producer shall obtain from each such other company a commitment that meets the requirements specified in paragraphs (f)(1) through (7) of this section, and these commitments shall be included in the foreign producer's application to be an approved foreign producer under this subpart.

(g) *Sovereign immunity*. By submitting an application to be an approved foreign producer under this subpart, or by producing and exporting ethanol to the United States under such approval, the foreign producer, and its agents and employees, without exception, become subject to the full operation of the administrative and judicial enforcement powers and provisions of the United States without limitation based on sovereign immunity, with respect to actions instituted against the foreign producer, its agents and employees in any court or other tribunal in the United States for conduct that violates

the requirements applicable to the foreign producer under this subpart, including conduct that violates the False Statements Accountability Act of 1996 (18 U.S.C. 1001) and section 113(c)(2) of the Clean Air Act (42 U.S.C. 7413).

(h) *Bond posting.* Any foreign producer shall meet the requirements of this paragraph (h) as a condition to approval as a foreign producer under this subpart.

(1) The foreign producer shall post a bond of the amount calculated using the following equation:

$$\text{Bond} = G * \$\,0.01$$

Where:

Bond = amount of the bond in U.S. dollars.

G = The largest volume of ethanol produced at the foreign producer's facility and exported to the United States, in gallons, during a single calendar year among the most recent of the following calendar years, up to a maximum of five calendar years: The calendar year immediately preceding the date the refinery's application is submitted, the calendar year the application is submitted, and each succeeding calendar year.

(2) Bonds shall be posted by any of the following methods:

(i) Paying the amount of the bond to the Treasurer of the United States.

(ii) Obtaining a bond in the proper amount from a third party surety agent that is payable to satisfy United States administrative or judicial judgments against the foreign producer, provided EPA agrees in advance as to the third party and the nature of the surety agreement.

(iii) An alternative commitment that results in assets of an appropriate liquidity and value being readily available to the United States provided EPA agrees in advance as to the alternative commitment.

(3) Bonds posted under this paragraph (h) shall:

(i) Be used to satisfy any judicial judgment that results from an administrative or judicial enforcement action for conduct in violation of this subpart, including where such conduct violates the False Statements Accountability Act of 1996 (18 U.S.C. 1001) and section 113(c)(2) of the Clean Air Act (42 U.S.C. 7413);

(ii) Be provided by a corporate surety that is listed in the United States Department of Treasury Circular 570 ''Companies Holding Certificates of Authority as Acceptable Sureties on Federal Bonds''; and

(iii) Include a commitment that the bond will remain in effect for at least five years following the end of the latest annual reporting period that the foreign producer produces ethanol pursuant to the requirements of this subpart.

(4) On any occasion a foreign producer bond is used to satisfy any judgment, the foreign producer shall increase the bond to cover the amount used within 90 days of the date the bond is used.

(5) If the bond amount for a foreign producer increases, the foreign producer shall increase the bond to cover the shortfall within 90 days of the date the bond amount changes. If the bond amount decreases, the foreign refiner may reduce the amount of the bond beginning 90 days after the date the bond amount changes.

(i) *English language reports.* Any document submitted to EPA by a foreign producer shall be in English language, or shall include an English language translation.

(j) *Prohibitions.* (1) No person may combine RFS–FRETH with any Non-RFS–FRETH, and no person may combine RFS–FRETH with any RFS–FRETH produced at a different refinery, until the importer has met all the requirements of paragraph (k) of this section.

(2) No foreign producer or other person may cause another person to commit an action prohibited in paragraph (j)(1) of this section, or that otherwise violates the requirements of this section.

(k) *Requirements for United States importers of RFS–FRETH.* Any United States importer shall meet the following requirements:

(1) Each batch of imported RFS–FRETH shall be classified by the importer as being RFS–FRETH.

(2) Ethanol shall be classified as RFS–FRETH according to the designation by the foreign producer if this designation is supported by product transfer documents prepared by the foreign producer as required in paragraph (c) of this section.

(3) For each ethanol batch classified as RFS–FRETH, any United States importer shall have an independent third party do all the following:

(i) Determine the volume of gasoline in the vessel.

(ii) Use the foreign producer's RFS–FRETH certification to determine the name and EPA-assigned registration number of the foreign producer that produced the RFS–FRETH.

(iii) Determine the name and country of registration of the vessel used to transport the RFS–FRETH to the United States.

(iv) Determine the date and time the vessel arrives at the United States port of entry.

(4) Where the importer is required to retire RINs under paragraph (e)(2) of this section, the importer must report the retired RINs in the applicable reports under § 80.1152.

(5) Any importer shall submit reports within 30 days following the date any vessel transporting RFS–FRETH arrives at the United States port of entry to the following:

(i) The Administrator containing the information determined under paragraph (k)(3) of this section.

(ii) The foreign producer containing the information determined under paragraph (k)(3)(i) of this section, and including identification of the port at which the product was off loaded, and any RINs retired under paragraph (e)(2) of this section.

(6) Any United States importer shall meet all other requirements of this subpart for any imported ethanol or other renewable fuel that is not classified as RFS–FRETH under paragraph (k)(2) of this section.

(l) *Truck imports of RFS–FRETH produced by a foreign producer.* (1) Any foreign producer whose RFS–FRETH is transported into the United States by truck may petition EPA to use alternative procedures to meet all the following requirements:

(i) Certification under paragraph (c)(2) of this section.

(ii) Load port and port of entry testing under paragraphs (d) and (e) of this section.

(iii) Importer testing under paragraph (k)(3) of this section.

(2) These alternative procedures must ensure RFS–FRETH remains segregated from Non-RFS–FRETH until it is imported into the United States. The petition will be evaluated based on whether it adequately addresses the following:

(i) Contracts with any facilities that receive and/or transport RFS–FRETH that prohibit the commingling of RFS–FRETH with Non-RFS–FRETH or RFS–FRETH from other foreign producers.

(ii) Attest procedures to be conducted annually by an independent third party that review loading records and import documents based on volume reconciliation to confirm that all RFS–FRETH remains segregated.

(3) The petition described in this section must be submitted to EPA along with the application for approval as a foreign producer under this subpart.

(m) *Additional attest requirements for producers of RFS–FRETH.* The following additional procedures shall be carried out by any producer of RFS–FRETH as part of the attest engagement required for renewable fuel producers under this subpart K.

(1) Obtain listings of all tenders of RFS–FRETH. Agree the total volume of tenders from the listings to the volumes determined by the third party under paragraph (d) of this section.

(2) For each tender under paragraph (m)(1) of this section, where the ethanol is loaded onto a marine vessel, report as a finding the name and country of registration of each vessel, and the volumes of RFS–FRETH loaded onto each vessel.

(3) Select a sample from the list of vessels identified in paragraph (m)(2) of this section used to transport RFS–FRETH, in accordance with the guidelines in § 80.127, and for each vessel selected perform the following:

(i) Obtain the report of the independent third party, under paragraph (d) of this section, and of the United States importer under paragraph (k) of this section.

(A) Agree the information in these reports with regard to vessel identification and ethanol volume.

(B) Identify, and report as a finding, each occasion the load port and port of entry volume results differ by more

than the amount allowed in paragraph (e) of this section, and determine whether the importer retired the appropriate amount of RINs as required under paragraph (e)(2) of this section, and submitted the applicable reports under § 80.1152 in accordance with paragraph (k)(4) of this section.

(ii) Obtain the documents used by the independent third party to determine transportation and storage of the RFS–FRETH from the foreign producer's facility to the load port, under paragraph (d) of this section. Obtain tank activity records for any storage tank where the RFS–FRETH is stored, and activity records for any mode of transportation used to transport the RFS–FRGAS prior to being loaded onto the vessel. Use these records to determine whether the RFS–FRETH was produced at the foreign producer's facility that is the subject of the attest engagement, and whether the RFS–FRETH was mixed with any Non-RFS–FRETH or any RFS–FRETH produced at a different facility.

(4) Select a sample from the list of vessels identified in paragraph (m)(2) of this section used to transport RFS–FRETH, in accordance with the guidelines in § 80.127, and for each vessel selected perform the following:

(i) Obtain a commercial document of general circulation that lists vessel arrivals and departures, and that includes the port and date of departure of the vessel, and the port of entry and date of arrival of the vessel.

(ii) Agree the vessel's departure and arrival locations and dates from the independent third party and United States importer reports to the information contained in the commercial document.

(5) Obtain a separate listing of the tenders under this paragraph (m)(5) where the gasoline is loaded onto a marine vessel. Select a sample from this listing in accordance with the guidelines in § 80.127, and obtain a commercial document of general circulation that lists vessel arrivals and departures, and that includes the port and date of departure and the ports and dates where the ethanol was off loaded for the selected vessels. Determine and report as a finding the country where the ethanol was off loaded for each vessel selected.

(6) In order to complete the requirements of this paragraph (m) an auditor shall:

(i) Be independent of the foreign producer;

(ii) Be licensed as a Certified Public Accountant in the United States and a citizen of the United States, or be approved in advance by EPA based on a demonstration of ability to perform the procedures required in §§ 80.125 through 80.127, 80.130, 80.1164, and this paragraph (m); and

(iii) Sign a commitment that contains the provisions specified in paragraph (f) of this section with regard to activities and documents relevant to compliance with the requirements of §§ 80.125 through 80.127, 80.130, 80.1164, and this paragraph (m).

(n) *Withdrawal or suspension of foreign producer approval.* EPA may withdraw or suspend a foreign producer's approval where any of the following occur:

(1) A foreign producer fails to meet any requirement of this section.

(2) A foreign government fails to allow EPA inspections as provided in paragraph (f)(1) of this section.

(3) A foreign producer asserts a claim of, or a right to claim, sovereign immunity in an action to enforce the requirements in this subpart.

(4) A foreign producer fails to pay a civil or criminal penalty that is not satisfied using the foreign producer bond specified in paragraph (g) of this section.

(o) *Additional requirements for applications, reports and certificates.* Any application for approval as a foreign producer, alternative procedures under paragraph (l) of this section, any report, certification, or other submission required under this section shall be:

(1) Submitted in accordance with procedures specified by the Administrator, including use of any forms that may be specified by the Administrator.

(2) Signed by the president or owner of the foreign producer company, or by that person's immediate designee, and shall contain the following declaration:

I hereby certify: (1) That I have actual authority to sign on behalf of and to bind [insert name of foreign producer] with regard to

all statements contained herein; (2) that I am aware that the information contained herein is being Certified, or submitted to the United States Environmental Protection Agency, under the requirements of 40 CFR part 80, subpart K, and that the information is material for determining compliance under these regulations; and (3) that I have read and understand the information being Certified or submitted, and this information is true, complete and correct to the best of my knowledge and belief after I have taken reasonable and appropriate steps to verify the accuracy thereof. I affirm that I have read and understand the provisions of 40 CFR part 80, subpart K, including 40 CFR 80.1165 apply to [insert name of foreign producer]. Pursuant to Clean Air Act section 113(c) and 18 U.S.C. 1001, the penalty for furnishing false, incomplete or misleading information in this certification or submission is a fine of up to $10,000 U.S., and/or imprisonment for up to five years.

[72 FR 24004, May 1, 2007, as amended at 73 FR 57258, Oct. 2, 2008]

§ 80.1167 What are the additional requirements under this subpart for a foreign RIN owner?

(a) *Foreign RIN owner*. For purposes of this subpart, a foreign RIN owner is a person located outside the United States, the Commonwealth of Puerto Rico, the Virgin Islands, Guam, American Samoa, and the Commonwealth of the Northern Mariana Islands (collectively referred to in this section as ''the United States'') that has been approved by EPA to own RINs.

(b) *General Requirement*. An approved foreign RIN owner must meet all requirements that apply to persons who own RINs under this subpart.

(c) *Foreign RIN owner commitments*. Any person shall commit to and comply with the provisions contained in this paragraph (c) as a condition to being approved as a foreign RIN owner under this subpart.

(1) Any United States Environmental Protection Agency inspector or auditor must be given full, complete and immediate access to conduct inspections and audits of the foreign RIN owner's place of business.

(i) Inspections and audits may be either announced in advance by EPA, or unannounced; and

(ii) Access will be provided to any location where documents related to RINs the foreign RIN owner has obtained, sold, transferred or held are kept.

(iii) Inspections and audits may be by EPA employees or contractors to EPA.

(iv) Any documents requested that are related to matters covered by inspections and audits must be provided to an EPA inspector or auditor on request.

(v) Inspections and audits by EPA may include review and copying of any documents related to the following:

(A) Transfers of title to RINs.

(B) Work performed and reports prepared by independent auditors under the requirements of this section, including work papers.

(vi) Inspections and audits by EPA may include interviewing employees.

(vii) Any employee of the foreign RIN owner must be made available for interview by the EPA inspector or auditor, on request, within a reasonable time period.

(viii) English language translations of any documents must be provided to an EPA inspector or auditor, on request, within 10 working days.

(ix) English language interpreters must be provided to accompany EPA inspectors and auditors, on request.

(2) An agent for service of process located in the District of Columbia shall be named, and service on this agent constitutes service on the foreign RIN owner or any employee of the foreign RIN owner for any action by EPA or otherwise by the United States related to the requirements of this subpart.

(3) The forum for any civil or criminal enforcement action related to the provisions of this section for violations of the Clean Air Act or regulations promulgated thereunder shall be governed by the Clean Air Act, including the EPA administrative forum where allowed under the Clean Air Act.

(4) United States substantive and procedural laws shall apply to any civil or criminal enforcement action against the foreign RIN owner or any employee of the foreign RIN owner related to the provisions of this section.

(5) Submitting an application to be a foreign RIN owner, and all other actions to comply with the requirements of this subpart constitute actions or activities covered by and within the meaning of the provisions of 28 U.S.C.

1605(a)(2), but solely with respect to actions instituted against the foreign RIN owner, its agents and employees in any court or other tribunal in the United States for conduct that violates the requirements applicable to the foreign RIN owner under this subpart, including conduct that violates the False Statements Accountability Act of 1996 (18 U.S.C. 1001) and section 113(c)(2) of the Clean Air Act (42 U.S.C. 7413).

(6) The foreign RIN owner, or its agents or employees, will not seek to detain or to impose civil or criminal remedies against EPA inspectors or auditors, whether EPA employees or EPA contractors, for actions performed within the scope of EPA employment related to the provisions of this section.

(7) The commitment required by this paragraph (c) shall be signed by the owner or president of the foreign RIN owner business.

(d) *Sovereign immunity*. By submitting an application to be a foreign RIN owner under this subpart, the foreign entity, and its agents and employees, without exception, become subject to the full operation of the administrative and judicial enforcement powers and provisions of the United States without limitation based on sovereign immunity, with respect to actions instituted against the foreign RIN owner, its agents and employees in any court or other tribunal in the United States for conduct that violates the requirements applicable to the foreign RIN owner under this subpart, including conduct that violates the False Statements Accountability Act of 1996 (18 U.S.C. 1001) and section 113(c)(2) of the Clean Air Act (42 U.S.C. 7413).

(e) *Bond posting*. Any foreign entity shall meet the requirements of this paragraph (e) as a condition to approval as a foreign RIN owner under this subpart.

(1) The foreign entity shall post a bond of the amount calculated using the following equation:

$$\text{Bond} = G * \$0.01$$

Where:

Bond = amount of the bond in U.S. dollars.

G = The total of the number of gallon-RINs the foreign entity expects to sell or transfer during the first calendar year that the foreign entity is a RIN owner, plus the number of gallon-RINs the foreign entity expects to sell or transfer during the next four calendar years. After the first calendar year, the bond amount shall be based on the actual number of gallon-RINs sold or transferred during the current calendar year and the number held at the conclusion of the current averaging year, plus the number of gallon-RINs sold or transferred during the four most recent calendar years preceding the current calendar year. For any year for which there were fewer than four preceding years in which the foreign entity sold or transferred RINs, the bond shall be based on the total of the number of gallon-RINs sold or transferred during the current calendar year and the number held at the end of the current calendar year, plus the number of gallon-RINs sold or transferred during any calendar year preceding the current calendar year, plus the number of gallon-RINs expected to be sold or transferred during subsequent calendar years, the total number of years not to exceed four calendar years in addition to the current calendar year.

(2) Bonds shall be posted by doing any of the following:

(i) Paying the amount of the bond to the Treasurer of the United States.

(ii) Obtaining a bond in the proper amount from a third party surety agent that is payable to satisfy United States administrative or judicial judgments against the foreign RIN owner, provided EPA agrees in advance as to the third party and the nature of the surety agreement.

(iii) An alternative commitment that results in assets of an appropriate liquidity and value being readily available to the United States, provided EPA agrees in advance as to the alternative commitment.

(3) Bonds posted under this paragraph (e) shall:

(i) Be used to satisfy any judicial judgment that results from an administrative or judicial enforcement action for conduct in violation of this subpart, including where such conduct violates the False Statements Accountability Act of 1996 (18 U.S.C. 1001) and section 113(c)(2) of the Clean Air Act (42 U.S.C. 7413);

(ii) Be provided by a corporate surety that is listed in the United States Department of Treasury Circular 570

''Companies Holding Certificates of Authority as Acceptable Sureties on Federal Bonds''; and

(iii) Include a commitment that the bond will remain in effect for at least five years following the end of latest reporting period in which the foreign RIN owner obtains, sells, transfers or holds RINs.

(4) On any occasion a foreign RIN owner bond is used to satisfy any judgment, the foreign RIN owner shall increase the bond to cover the amount used within 90 days of the date the bond is used.

(f) *English language reports.* Any document submitted to EPA by a foreign RIN owner shall be in English language, or shall include an English language translation.

(g) *Prohibitions.* (1) A foreign RIN owner is prohibited from obtaining, selling, transferring or holding any RIN that is in excess of the number for which the bond requirements of this section have been satisfied.

(2) Any RIN that is sold, transferred or held that is in excess of the number for which the bond requirements of this section have been satisfied is an invalid RIN under § 80.1131.

(3) Any RIN that is obtained from a person located outside the United States that is not an approved foreign RIN owner under this section is an invalid RIN under § 80.1131.

(4) No foreign RIN owner or other person may cause another person to commit an action prohibited in this paragraph (g), or that otherwise violates the requirements of this section.

(h) *Additional attest requirements for foreign RIN owners.* The following additional requirements apply to any foreign RIN owner as part of the attest engagement required for RIN owners under this subpart K.

(1) The attest auditor must be independent of the foreign RIN owner.

(2) The attest auditor must be licensed as a Certified Public Accountant in the United States and a citizen of the United States, or be approved in advance by EPA based on a demonstration of ability to perform the procedures required in §§ 80.125 through 80.127, 80.130, and 80.1164.

(3) The attest auditor must sign a commitment that contains the provisions specified in paragraph (c) of this section with regard to activities and documents relevant to compliance with the requirements of §§ 80.125 through 80.127, 80.130, and 80.1164.

(i) *Withdrawal or suspension of foreign RIN owner status.* EPA may withdraw or suspend its approval of a foreign RIN owner where any of the following occur:

(1) A foreign RIN owner fails to meet any requirement of this section, including, but not limited to, the bond requirements.

(2) A foreign government fails to allow EPA inspections as provided in paragraph (c)(1) of this section.

(3) A foreign RIN owner asserts a claim of, or a right to claim, sovereign immunity in an action to enforce the requirements in this subpart.

(4) A foreign RIN owner fails to pay a civil or criminal penalty that is not satisfied using the foreign RIN owner bond specified in paragraph (e) of this section.

(j) *Additional requirements for applications, reports and certificates.* Any application for approval as a foreign RIN owner, any report, certification, or other submission required under this section shall be:

(1) Submitted in accordance with procedures specified by the Administrator, including use of any forms that may be specified by the Administrator.

(2) Signed by the president or owner of the foreign RIN owner company, or by that person's immediate designee, and shall contain the following declaration:

I hereby certify: (1) That I have actual authority to sign on behalf of and to bind [insert name of foreign RIN owner] with regard to all statements contained herein; (2) that I am aware that the information contained herein is being Certified, or submitted to the United States Environmental Protection Agency, under the requirements of 40 CFR part 80, subpart K, and that the information is material for determining compliance under these regulations; and (3) that I have read and understand the information being Certified or submitted, and this information is true, complete and correct to the best of my knowledge and belief after I have taken reasonable and appropriate steps to verify the accuracy thereof. I affirm that I have read and understand the provisions of 40 CFR part 80, subpart K, including 40 CFR 80.1167 apply to [insert name of foreign RIN owner].

Pursuant to Clean Air Act section 113(c) and 18 U.S.C. 1001, the penalty for furnishing false, incomplete or misleading information in this certification or submission is a fine of up to $10,000 U.S., and/or imprisonment for up to five years.

[72 FR 24004, May 1, 2007, as amended at 73 FR 57259, Oct. 2, 2008]

Subpart L—Gasoline Benzene

SOURCE: 72 FR 8544, Feb. 26, 2007, unless otherwise noted.

§§ 80.1200–80.1219 [Reserved]

GENERAL INFORMATION

§ 80.1220 What are the implementation dates for the gasoline benzene program?

(a) *Benzene standard.* (1) For the annual averaging period beginning January 1, 2011, and for each annual averaging period thereafter, gasoline produced at each refinery of a refiner or imported by an importer, must meet the benzene standard specified in § 80.1230(a), except as otherwise specifically provided for in this subpart.

(2) For the period July 1, 2012 through December 31, 2013, and for each annual averaging period thereafter, gasoline produced at each refinery of a refiner or imported by an importer, must meet the maximum average benzene standard specified in § 80.1230(b), except as otherwise specifically provided for in this subpart.

(3) Small refiners approved under § 80.1340 may defer meeting the benzene standard specified in § 80.1230(a) until the annual averaging period beginning January 1, 2015 and may defer meeting the benzene standard specified in § 80.1230(b) until the averaging period beginning July 1, 2016, as described in § 80.1342.

(b) *Early credit generation.* (1) Effective with the averaging period beginning June 1, 2007, a refiner for each of its refineries that has an approved benzene baseline per § 80.1285 may generate early benzene credits in accordance with the provisions of § 80.1275.

(2) Early benzene credits may be generated through the end of the averaging period ending December 31, 2010, or through the end of the averaging period ending December 31, 2014 for small refiners approved under § 80.1340.

(c) *Standard credit generation.* (1) Effective with the annual averaging period beginning January 1, 2011, a refiner for any of its refineries or an importer for its imported gasoline, may generate standard benzene credits in accordance with the provisions of § 80.1290.

(2) Effective with the annual averaging period beginning January 1, 2015, a small refiner approved under § 80.1340, for any of its refineries, may generate standard benzene credits in accordance with the provisions of § 80.1290.

§ 80.1225 Who must register with EPA under the gasoline benzene program?

(a) Refiners and importers that are registered by EPA under § 80.76, § 80.103, § 80.190, or § 80.810 are deemed to be registered for purposes of this subpart.

(b) Refiners and importers subject to the requirements in § 80.1230 that are not registered by EPA under § 80.76, § 80.103, § 80.190 or § 80.810 shall provide to EPA the information required in § 80.76 by September 30, 2010, or not later than three months in advance of the first date that such person produces or imports gasoline, whichever is later.

(c) Refiners that plan to generate early credits under § 80.1275 and that are not registered by EPA under § 80.76, § 80.103, § 80.190, or § 80.810 must provide to EPA the information required in § 80.76 not later than 60 days prior to the end of the first year of credit generation.

GASOLINE BENZENE REQUIREMENTS

§ 80.1230 What are the gasoline benzene requirements for refiners and importers?

(a) *Annual average benzene standard.* (1) Except as specified in paragraph (c) of this section, a refinery's or importer's average gasoline benzene concentration in any annual averaging period shall not exceed 0.62 volume percent.

(2) Compliance with the standard specified in paragraph (a)(1) of this section, or creation of a deficit in accordance with paragraph (c) of this section,

is determined in accordance with § 80.1240(a).

(3) The annual averaging period for achieving compliance with the requirement of paragraph (a)(1) of this section is January 1 through December 31 of each calendar year beginning January 1, 2011, or beginning January 1, 2015 for small refiners approved under § 80.1340.

(4) Refinery grouping per § 80.101(h) does not apply to compliance with the gasoline benzene requirement specified in this paragraph (a).

(5) Gasoline produced at foreign refineries that is subject to the gasoline benzene requirements per § 80.1235 shall be included in the importer's compliance determination beginning January 1, 2011, or beginning January 1, 2015 for small foreign refiners approved under § 80.1340.

(b) *Maximum average benzene standard.* (1) A refinery's or importer's maximum average gasoline benzene concentration in any averaging period shall not exceed 1.30 volume percent.

(2) Compliance with the standard specified in paragraph (b)(1) of this section is determined in accordance with § 80.1240(b).

(3) The averaging period for achieving compliance with the requirement of paragraph (b)(1) of this section is July 1, 2012 through December 31, 2013 and each calendar year thereafter, or July 1, 2016 through December 31, 2017, and each calendar year thereafter for small refiners approved under § 80.1340.

(c) *Deficit carry-forward.* (1) A refinery or importer creates a benzene deficit for a given averaging period when its compliance benzene value, per § 80.1240(a), is greater than the benzene standard specified in paragraph (a) of this section.

(2) A refinery or importer may carry the benzene deficit forward to the calendar year following the year the benzene deficit is created but only if no deficit had been previously carried forward to the year the deficit is created. If a refinery or importer carries forward a deficit, the following provisions apply in the second year:

(i) The refinery or importer must achieve compliance with the benzene standard specified in paragraph (a) of this section.

(ii) The refinery or importer must achieve further reductions in its gasoline benzene concentrations sufficient to offset the benzene deficit of the previous year.

(iii) Benzene credits may be used, per § 80.1295, to meet the requirements of paragraphs (c)(2)(i) and (ii) of this section.

(iv) A refinery that has banked credits per § 80.1295(a)(3) must use all of its banked credits to achieve compliance with the benzene standard specified in paragraph (a) of this section before creating a deficit.

(3) EPA may allow an extended period of deficit carry-forward if it grants hardship relief under §§ 80.1335 or 80.1336 from the annual average standard specified in paragraph (a) of this section.

§ 80.1235 What gasoline is subject to the benzene requirements of this subpart?

(a) For the purposes of determining compliance with the requirements of § 80.1230, all of the following products that are produced or imported for use in the United States during a refinery's or importer's applicable compliance period are collectively ''gasoline'' and are to be included in a refinery's or importer's compliance determination under § 80.1240, except as provided in paragraph (b) of this section:

(1) Reformulated gasoline.

(2) Conventional gasoline.

(3) Reformulated gasoline blendstock for oxygenate blending (''RBOB'').

(4) Conventional gasoline blendstock that becomes finished conventional gasoline upon the addition of oxygenate (''CBOB'').

(5) Blendstock that has been combined with finished gasoline, other blendstock, transmix, or gasoline produced from transmix to produce gasoline.

(6) Blendstock that has been combined with previously certified gasoline (''PCG'') to produce gasoline. Such blendstock must be sampled in accordance with the provisions at § 80.1347(a)(5).

(b) The following products are not to be included in a refinery's or importer's compliance determination under § 80.1240:

(1) Blendstock that has not been combined with other blendstock or finished gasoline to produce gasoline.

(2) Oxygenate added to finished gasoline, RBOB, or CBOB downstream of the refinery that produced the gasoline or import facility where the gasoline was imported.

(3) Butane added to finished gasoline, RBOB, CBOB downstream of the refinery that produced the gasoline or import facility where the gasoline was imported.

(4) Gasoline produced by separating gasoline from transmix.

(5) PCG.

(6) Gasoline produced or imported for use in Guam, American Samoa, and the Commonwealth of the Northern Mariana Islands.

(7) Gasoline exported for use outside the United States.

(8) Gasoline produced by a small refiner approved under § 80.1340 prior to January 1, 2015, or prior to the small refiner's first compliance period pursuant to § 80.1342(a), whichever is earlier.

(9) Gasoline that is used to fuel aircraft, racing vehicles or racing boats that are used only in sanctioned racing events, provided that —

(i) Product transfer documents associated with such gasoline, and any pump stand from which such gasoline is dispensed, identify the gasoline either as gasoline that is restricted for use in aircraft, or as gasoline that is restricted for use in racing motor vehicles or racing boats that are used only in sanctioned events;

(ii) The gasoline is completely segregated from all other gasoline throughout production, distribution and sale to the ultimate consumer; and

(iii) The gasoline is not made available for use as motor vehicle gasoline, or dispensed for use in motor vehicles, except for motor vehicles used only in sanctioned racing events.

(10) California gasoline, as defined in § 80.1236.

§ 80.1236 What requirements apply to California gasoline?

(a) *Definition*. For purposes of this subpart, ''California gasoline'' means any gasoline designated by the refiner or importer as for use only in California and that is actually used in California.

(b) *California gasoline exemption*. California gasoline that complies with all the requirements of this section is exempt from the requirements in § 80.1230.

(c) *Requirements for California gasoline*. The following requirements apply to California gasoline:

(1) Each batch of California gasoline must be designated as such by its refiner or importer.

(2) Designated California gasoline must be kept segregated from gasoline that is not California gasoline at all points in the distribution system.

(3) Designated California gasoline must ultimately be used in the State of California and not used elsewhere in the United States.

(4) In the case of California gasoline produced outside the State of California, the transferors and transferees must meet the product transfer document requirements under § 80.81(g).

(5) Gasoline that is ultimately used in any part of the United States outside of the State of California must comply with the requirements specified in § 80.1230, regardless of any designation as California gasoline.

§ 80.1238 How is a refinery's or importer's average benzene concentration determined?

(a) The average benzene concentration of gasoline produced at a refinery or imported by an importer for an applicable averaging period is calculated according to the following equation:

$$B_{avg} = \frac{\sum_{i=1}^{n} (V_i \times B_i)}{\sum_{i=1}^{n} V_i}$$

Where:

B_{avg} = Average benzene concentration for the applicable averaging period (volume percent benzene).

i = Individual batch of gasoline produced at the refinery or imported during the applicable averaging period.

n = Total number of batches of gasoline produced at the refinery or imported during the applicable annual averaging period.

V_i = Volume of gasoline in batch i (gallons).

B_i = Benzene concentration of batch i (volume percent benzene), per § 80.46(e).

(b) A refiner or importer may include the volume of oxygenate added downstream from the refinery or import facility in the calculation specified in paragraph (a) of this section, provided the following requirements are met:

(1) For oxygenate added to conventional gasoline, the refiner or importer must comply with the requirements of § 80.101(d)(4)(ii) and the calculation methodologies of § 80.101(g)(3).

(2) For oxygenate added to RBOB, the refiner or importer must comply with the requirements of § 80.69(a).

(c) Refiners and importers must exclude from the calculation specified in paragraph (a) of this section all of the following:

(1) Gasoline that was not produced at the refinery or imported by the importer.

(2) Except as provided in paragraph (b) of this section, any blendstocks or unfinished gasoline transferred to others.

(3) Gasoline that has been included in the compliance calculations for another refinery or importer.

(4) Gasoline exempted from the standards under § 80.1235(b).

§ 80.1240 How is a refinery's or importer's compliance with the gasoline benzene requirements of this subpart determined?

(a) A refinery's or importer's compliance with the annual average benzene standard at § 80.1230(a) is determined as follows:

(1)(i) The compliance benzene value for a refinery or importer is:

$$CBV_y = V_y \times \left(\frac{B_{avg,y}}{100}\right) + D_{y-1} - BC - OC$$

Where:

CBV_y = Compliance benzene value (gallons benzene) for year y.

V_y = Gasoline volume produced or imported in year y (gallons).

$B_{avg,y}$ = Average benzene concentration in year y (volume percent benzene), calculated in accordance with § 80.1238.

D_{y-1} = Benzene deficit from the previous reporting period, per § 80.1230(c) (gallons benzene).

BC = Banked benzene credits used to show compliance (gallons benzene).

OC = Benzene credits obtained by the refinery or importer used to show compliance (gallons benzene).

(ii) Benzene credits used in the calculation specified in paragraph (a)(1)(i) of this section must be used in accordance with the requirements at § 80.1295.

(2)(i) If $CBV_y \leq V_y \times (0.62)/100$, then compliance with the benzene requirement at § 80.1230(a) is achieved for calendar year y.

(ii) If $CBV_y > V_y \times (0.62)/100$, then compliance with the benzene requirement at § 80.1230(a) is not achieved for calendar year y, and a deficit is created per § 80.1230(c). The deficit value to be included in the following year's compliance calculation per paragraph (a) of this section is calculated as follows:

$$D_y = CBV_y - V_y \times \left(\frac{0.62}{100}\right)$$

Where:

D_y = Benzene deficit created in compliance period y (gallons benzene).

(b) Compliance with the maximum average benzene standard at § 80.1230(b) is achieved by a refinery or importer if the value of B_{avg} calculated in accordance with § 80.1238(a) is no greater 1.30 volume percent for an applicable averaging period per § 80.1230(b)(3).

AVERAGING, BANKING AND TRADING (ABT) PROGRAM

§ 80.1270 Who may generate benzene credits under the ABT program?

(a) *Early benzene credits.* Early benzene credits are credits generated prior to 2011, or prior to 2015 if generated by a small refiner approved under § 80.1340.

(1)(i) Early credits may be generated under § 80.1275 by a refiner for any refinery it owns that has an approved benzene baseline under § 80.1285, including a refinery of a foreign refiner that is subject to the provisions of § 80.1363.

(ii) The refinery specified in paragraph (a)(1)(i) of this section must process crude oil and/or intermediate feedstocks through refinery processing units.

(iii) Early benzene credits shall be calculated separately for each refinery of a refiner.

(iv) A refinery that is approved for early compliance under § 80.1334 may

not generate early credits for the gasoline subject to the early compliance provisions.

(2)(i) A refinery that was shut down during the entire 2004–2005 benzene baseline period is not eligible to generate early credits under § 80.1275.

(ii) A refinery not in full production, excluding normal refinery downtime, or not showing consistent or regular gasoline production activity during 2004–2005 may be eligible to generate early benzene credits under § 80.1275 upon petition to and approval by EPA, pursuant to § 80.1285(d).

(3) Importers may not generate early credits.

(b) *Standard benzene credits.* Standard benzene credits are credits generated after 2010, or after 2014 if generated by a small refiner approved under § 80.1340.

(1) Unless otherwise provided for elsewhere in this subpart, standard credits may be generated under § 80.1290 as follows:

(i) A refiner may generate standard credits separately for each of its refineries.

(ii) An importer may generate standard credits for all of its imported gasoline.

(2) Oxygenate blenders, butane blenders, and transmix producers may not generate standard credits.

(3) Foreign refiners may not generate standard credits.

§ 80.1275 How are early benzene credits generated?

(a) For each averaging period per paragraph (b) of this section in which a refinery plans to generate early credits, its average gasoline benzene concentration calculated according to § 80.1238(a) must be at least 10% lower than its benzene baseline concentration approved under § 80.1280.

(b) The early credit averaging periods are as follows:

(1) For 2007, the seven-month period from June 1, 2007 through December 31, 2007.

(2) For 2008, 2009 and 2010, the 12-month calendar year.

(3) For small refiners approved under § 80.1340, the 12-month calendar years 2011, 2012, 2013, and 2014 in addition to the periods specified in paragraphs (b)(1) and (b)(2) of this section.

(c) The number of early benzene credits generated shall be calculated for each applicable averaging period as follows:

$$EC_y = \left[\frac{B_{Base} - B_{avg,y}}{100}\right] \times V_{e,y}$$

Where:

EC_y = Early credits generated in averaging period y (gallons benzene).

B_{Base} = Baseline benzene concentration of the refinery (volume percent benzene), per § 80.1280(a).

$B_{avg,y}$ = Average benzene concentration of gasoline produced at the refinery during averaging period y (volume percent benzene), per § 80.1238.

$V_{e,y}$ = Total volume of gasoline produced at the refinery during averaging period y (gallons).

(d) A refinery that plans to generate early credits must also show that it has met all of the following requirements prior to or during the first early credit averaging period, per paragraph (b) of this section, in which it generates early credits:

(1) Since 2005, has made operational changes and/or improvements in benzene control technology to reduce gasoline benzene levels, including at least one of the following:

(i) Treating the heavy straight run naphtha entering the reformer using light naphtha splitting and/or isomerization.

(ii) Treating the reformate stream exiting the reformer using benzene extraction or benzene saturation.

(iii) Directing additional refinery streams to the reformer for treatment described paragraphs (d)(1)(i) and (ii) of this section.

(iv) Directing reformate streams to other refineries with treatment capabilities described in paragraph (d)(1)(ii) of this section.

(v) Providing for benzene alkylation.

(2)(i) A refiner may petition EPA to approve, for purposes of paragraph (d)(1) of this section, the use of operational changes and/or improvements in benzene control technology that are not listed in paragraph (d)(1) of this section to reduce gasoline benzene levels at a refinery.

(ii) The petition specified in paragraph (d)(2)(i) of this section must be

sent to: U.S. EPA, NVFEL–ASD, Attn: MSAT2 Early Credit Benzene Reduction Technology, 2000 Traverwood Dr., Ann Arbor, MI 48105.

(iii) The petition specified in paragraph (d)(2)(i) of this section must show how the benzene control technology improvement or operational change results in a net reduction in the refinery's average gasoline benzene level, exclusive of benzene reductions due simply to blending practices.

(iv) The petition specified in paragraph (d)(2)(i) of this section must be submitted to EPA prior to the start of the first averaging period in which the refinery plans to generate early credits.

(v) The refiner must provide additional information as requested by EPA.

(e) Early benzene credits calculated in accordance with paragraph (c) of this section shall be expressed to the nearest gallon. Fractional values shall be rounded down if less than 0.50, and rounded up if greater than or equal to 0.50.

[72 FR 8544, Feb. 26, 2007, as amended at 73 FR 61363, Oct. 16, 2008; 77 FR 1354, Jan. 9, 2012]

§ 80.1280 How are refinery benzene baselines calculated?

(a) A refinery's benzene baseline is based on the refinery's 2004–2005 average gasoline benzene concentration, calculated according to the following equation:

$$B_{Base} = \frac{\sum_{i=1}^{n} (V_i \times B_i)}{\sum_{i=1}^{n} V_i}$$

Where:

B_{Base} = Benzene baseline concentration (volume percent benzene).

$_i$ = Individual batch of gasoline produced at the refinery from January 1, 2004 through December 31, 2005.

n = Total number of batches of gasoline produced at the refinery from January 1, 2004 through December 31, 2005 (or the total number of batches of gasoline pursuant to § 80.1285(d)).

V_i = Volume of gasoline in batch i (gallons).

B_i = Benzene content of batch i (volume percent benzene).

(b) A refiner for a refinery that included oxygenate blended downstream of the refinery in compliance calculations for RFG or conventional gasoline for calendar years 2004 or 2005 under § 80.69 or § 80.101(d)(4) must include the volume and benzene concentration of this oxygenate in the benzene baseline calculation for that refinery under paragraph (a) of this section.

§ 80.1285 How does a refiner apply for a benzene baseline?

(a) A benzene baseline application must be submitted for each refinery that plans to generate early credits under § 80.1275. The application must include the information specified in paragraph (c) of this section and must be submitted to EPA at least 60 days before the first averaging period in which the refinery plans to generate early credits.

(b) For U.S. Postal delivery, the benzene baseline application shall be sent to: Attn: MSAT2 Benzene, Mail Stop 6406J, U.S. Environmental Protection Agency, 1200 Pennsylvania Ave., NW., Washington, DC 20460. For commercial delivery: MSAT2 Benzene, 202–343–9038, U.S. Environmental Protection Agency, 1310 L Street, NW., Washington, DC 20005.

(c) The benzene baseline application must include the following information:

(1) A listing of the names and addresses of all refineries owned by the company.

(2) The benzene baseline for gasoline produced in 2004–2005 at the refinery, calculated in accordance with § 80.1280.

(3) Copies of the annual reports required under § 80.75 for RFG and § 80.105 for conventional gasoline.

(4) A letter signed by the president, chief operating officer, or chief executive officer, of the company, or his/her designee, stating that the information contained in the benzene baseline determination is true to the best of his/her knowledge.

(5) Name, address, phone number, facsimile number and e-mail address of a corporate contact person.

(d) For a refinery that may be eligible to generate early credits under § 80.1270(a)(2)(ii), a refiner may submit to EPA a benzene baseline application

per the requirements of this section. The refiner must also submit information regarding the nature and cause of the refinery's production activity that resulted in irregular or less than full production, how it affected the baseline benzene concentration, and whether and how an alternative calculation to the calculation specified in § 80.1280 produces a more representative benzene baseline value. Upon consideration of the submitted information, EPA may approve a benzene baseline for such a refinery.

(e) EPA will notify the refiner of approval of the refinery's benzene baseline or any deficiencies in the application. However, except for applications submitted in accordance with paragraph (d) of this section, the refinery's benzene baseline application may be considered approved 60 days after EPA's receipt of the baseline application, subject to paragraph (f) of this section.

(f) If at any time the baseline submitted in accordance with the requirements of this section is determined to be incorrect, EPA will notify the refiner of the corrected baseline.

§ 80.1290 How are standard benzene credits generated?

(a) The standard credit averaging periods are the calendar years beginning January 1, 2011, or beginning January 1, 2015 for small refiners approved under § 80.1340.

(b) [Reserved]

(c)(1) The number of standard benzene credits generated shall be calculated annually for each applicable averaging period according to the following equation:

$$SC_y = \left[\frac{0.62 - B_{avg,y}}{100}\right] \times V_y$$

Where:

SC_y = Standard credits generated in year y (gallons benzene).

$B_{avg,y}$ = Annual average benzene concentration for year y (volume percent benzene), per § 80.1238.

V_y = Total volume of gasoline produced or imported in year y (gallons).

(2) No credits shall be generated unless the value SC_y is positive.

(d) Standard benzene credits calculated in accordance with paragraph (c) of this section shall be expressed to the nearest gallon. Fractional values shall be rounded down if less than 0.50, and rounded up if greater than or equal to 0.50.

§ 80.1295 How are gasoline benzene credits used?

(a) *Credit use.* (1) Gasoline benzene credits may be used to comply with the gasoline benzene standard of § 80.1230(a) provided that—

(i) The gasoline benzene credits were generated according to § 80.1275 or § 80.1290.

(ii) The recordkeeping requirements for gasoline benzene credits under § 80.1350 are met.

(iii) The gasoline benzene credits are correctly reported according to §§ 80.1352 and 80.1354.

(iv) The conditions of this section are met.

(2) Gasoline benzene credits generated under §§ 80.1275 and 80.1290 may be used interchangeably in all credit use scenarios, subject to the credit life provisions specified in paragraph (c) of this section.

(3) Gasoline benzene credits may be used by a refiner or importer to comply with the gasoline benzene content standard of § 80.1230(a), may be banked by a refiner or importer for future use or transfer, may be transferred to another refinery or importer within a company (intracompany trading), or may be transferred to another refiner or importer outside of the company.

(b) *Credit transfers.* (1) Gasoline benzene credits obtained from another refinery or importer may be used to comply with the gasoline benzene content requirement of § 80.1230(a) provided the following conditions are met:

(i) The credits are generated and reported according to the requirements of this subpart, and the transferred credits have not expired, per paragraph (c) of this section.

(ii) Any credit transfer takes place no later than the last day of February following the calendar year averaging period when the credits are used.

(iii) The credit has not been transferred more than twice. The first transfer by the refinery or importer that

generated the credit may only be made to a refiner or importer that intends to use the credit; if the transferee cannot use the credit, it may make the second, and final, transfer only to a refiner or importer that intends to use or to terminate the credit. In no case may a credit be transferred more than twice before being used or terminated.

(iv) The credit transferor has applied any gasoline benzene credits necessary to meet its own annual compliance requirements (including any deficit carried forward, pursuant to § 80.1230(c), if applicable) before transferring any gasoline benzene credits to any other refiner or importer.

(v) The credit transferor does not create a deficit as a result of a credit transfer.

(vi) The transferor supplies records to the transferee indicating the year the gasoline benzene credits were generated, the identity of the refiner (and refinery) or importer that generated the gasoline benzene credits, and the identity of the transferring entity if it is not the same entity that generated the gasoline benzene credits.

(2) In the case of gasoline benzene credits that have been calculated or created improperly, or that EPA has otherwise determined to be invalid, the following provisions apply:

(i) Invalid gasoline benzene credits cannot be used to achieve compliance with the gasoline benzene content requirement of § 80.1230(a), regardless of the transferee's good-faith belief that the gasoline benzene credits were valid.

(ii) The refiner or importer that used the gasoline benzene credits and any transferor of the gasoline benzene credits must adjust their credit records, reports, and compliance calculations as necessary to reflect the proper gasoline benzene credits.

(iii) Any properly created gasoline benzene credits existing in the transferor's credit balance following the corrections and adjustments specified in paragraph (b)(2)(ii) of this section must first be applied to correct the invalid transfers to the transferee, before the transferor uses, trades or banks the gasoline benzene credits.

(c) *Credit life.* (1)(i) Early credits, per § 80.1275, may be used for compliance purposes under § 80.1240(a) for any of the following annual averaging periods: 2011, 2102, 2013.

(ii) Early credits, per § 80.1275, may be used for compliance purposes under § 80.1240(a) by small refiners approved under § 80.1340 for any of the following averaging periods: 2015, 2016, 2017.

(2)(i) Standard credits, per § 80.1290, may be used for compliance purposes under § 80.1240(a) within five years from the year they were generated, except as noted under paragraph (c)(2)(ii) of this section. Example: Standard credits generated during 2011 may be used to achieve compliance under § 80.1240(a) for any calendar year averaging period prior to the 2017 averaging period.

(ii) Standard credits, per § 80.1290, may be used for compliance purposes under § 80.1240(a) within seven years from the year they were generated if traded to and ultimately used by a small refiner approved under § 80.1340. Example: Standard credits generated in 2011 may be used to achieve compliance under § 80.1240(a) for any calendar year averaging period prior to the 2019 averaging period if traded to and ultimately used by a small refiner approved under § 80.1340.

(d) *Deficit provision limitation.* A refiner or importer possessing gasoline benzene credits must use all gasoline benzene credits in its possession before applying the benzene deficit provisions of § 80.1230(c).

HARDSHIP PROVISIONS

§ 80.1334 What are the requirements for early compliance with the gasoline benzene program?

(a)(1) A refinery may comply with the benzene requirements at § 80.1230 for its RFG and/or conventional gasoline (CG) prior to the 2011 compliance period if it applies for this early compliance option as specified in paragraph (b) of this section, and is approved by EPA.

(2) Only refineries that produce gasoline by processing crude and/or intermediate feedstocks through refinery processing units may apply for this early compliance option.

(b) Refiners must submit an application in order to be considered for early compliance as described in this section.

(1) Applications for early compliance as described in this section must be

submitted to EPA by December 31, 2007.

(2) Applications must be sent to: U.S. EPA, NVFEL–ASD, Attn: MSAT2 Early Compliance, 2000 Traverwood Dr., Ann Arbor, MI 48105.

(3) Application must be made separately for a refinery's RFG and CG pools.

(4) The early compliance application must show that all the following criteria are met:

(i) For an RFG early compliance application—

(A) The refinery's RFG baseline value under § 80.915 is greater than or equal to 30 percent reduction.

(B) The refinery's 2003 RFG annual average benzene concentration was less than or equal to 0.62 vol%.

(C) The refinery's 2003 RFG annual average sulfur concentration was less than or equal to 140 ppm.

(D) The refinery's 2003 RFG annual average MTBE concentration was greater than or equal to 6 vol%.

(ii) For a CG early compliance application—

(A) The refinery's CG baseline under § 80.915 is less than or equal to 80 mg/mile.

(B) The refinery's 2003 CG annual average benzene concentration was less than or equal to 0.62 vol%.

(C) The refinery's 2003 CG annual average sulfur concentration was less than or equal to 140 ppm.

(D) The refinery's 2003 CG annual average MTBE concentration was greater than or equal to 6 vol%.

(5) In addition, the application must demonstrate that the refinery has extremely limited ability to adjust its operations in order to comply with its applicable RFG or CG toxics performance requirements under § 80.815.

(6) The refiner must provide additional information as requested by EPA.

(c)(1) If approved for early compliance with the provisions of this subpart, the refinery may comply with the provisions of § 80.1230 as follows:

(i) For the compliance period beginning January 1, 2007, and each annual compliance period through 2010; or

(ii) For the compliance period beginning January 1, 2008, and each annual compliance period through 2010.

(2) The refinery must notify EPA under which compliance period specified in paragraph (c)(1) of this section it will begin compliance.

(3) Beginning with the compliance period chosen pursuant to paragraph (c)(2) of this section—

(i) For early compliance approved for a refinery's RFG pool, the toxics air pollutants emissions performance requirements specified in §§ 80.41(e)(1) and (f)(1) and 80.815 shall not apply to the reformulated gasoline produced by the refinery.

(ii) For early compliance approved for a refinery's CG pool, the annual average exhaust toxics emissions requirements specified in §§ 80.101(c)(2) and 80.815 shall not apply to conventional gasoline produced by the refinery.

(4) Refineries approved for early compliance under this section may not generate early credits under § 80.1275.

(d) If EPA finds that a refiner provided false or inaccurate information in its application for early compliance, the early compliance approval will be void *ab initio*.

§ 80.1335 Can a refiner seek relief from the requirements of this subpart?

(a) A refiner may apply for relief from the requirements specified in § 80.1230(a) or (b) for a refinery, if it can show that—

(1) Unusual circumstances exist that impose extreme hardship and significantly affect the ability to comply with the gasoline benzene standards at § 80.1230(a) or (b) by the applicable date(s); and

(2) It has made best efforts to comply with the requirements of this subpart.

(b) A refiner must apply for and be approved for relief under this section.

(1) An application must include the following information:

(i) A plan demonstrating how the refiner will comply with the requirements of § 80.1230(a) or (b), as applicable, as expeditiously as possible. The plan shall include a showing that contracts are or will be in place for engineering and construction of benzene reduction technology, a plan for applying for and obtaining any permits necessary for construction, a description of plans to obtain necessary capital,

and a detailed estimate of when the requirements of § 80.1230(a) or (b), as applicable, will be met.

(ii) A detailed description of the refinery configuration and operations including, at minimum, the following information:

(A) The refinery's total reformer unit throughput capacity;

(B) The refinery's total crude capacity;

(C) Total crude capacity of any other refineries owned by the same entity;

(D) Total volume of gasoline production at the refinery;

(E) Total volume of other refinery products;

(F) Geographic location(s) where the refinery's gasoline will be sold;

(G) Detailed descriptions of efforts to obtain capital for refinery investments;

(H) Bond rating of entity that owns the refinery; and

(I) Estimated capital investment needed to comply with the requirements of this subpart.

(iii) For a hardship related to complying with the requirement at § 80.1230(a), detailed descriptions of efforts to obtain credits, including the prices of credits available, but deemed uneconomical by the refiner.

(2) Applicants must also provide any other relevant information requested by EPA.

(3) An application for relief from the requirements specified in § 80.1230(b) must be submitted to EPA by January 1, 2008, or by January 1, 2013 for small refiners approved under § 80.1340.

(c)(1) Approval of a hardship application under this section for relief from the annual average benzene standard at § 80.1230(a) shall be in the form of an extended period of deficit carry-forward, per § 80.1230(c), for such period of time as EPA determines is appropriate.

(2) Approval of a hardship application under this section for relief from the maximum average benzene standard at § 80.1230(b) shall be in the form of a waiver of the standard for such period of time as EPA determines is appropriate.

(3) EPA may deny any application for appropriate reasons, including unacceptable environmental impact.

(d) EPA may impose any other reasonable conditions on relief provided under this section, including rescinding, or reducing the length of, the extended deficit carry-forward period if conditions or situations change between approval of the hardship application and the end of the approved relief period.

§ 80.1336 What if a refiner or importer cannot produce gasoline conforming to the requirements of this subpart?

In extreme, unusual, and unforeseen circumstances (for example, a natural disaster or a refinery fire) that are clearly outside the control of the refiner or importer and that could not have been avoided by the exercise of prudence, diligence, and due care, EPA may permit a refinery or importer to exceed the allowable average benzene levels specified in § 80.1230(a) or (b), as applicable, if—

(a) It is in the public interest to do so;

(b) The refiner or importer exercised prudent planning and was not able to avoid the violation and has taken all reasonable steps to minimize the extent of the nonconformity;

(c) The refiner or importer can show how the requirements at § 80.1230(a) or (b), as applicable, will be achieved as expeditiously as possible;

(d) The refiner or importer agrees to make up any air quality detriment associated with the nonconformity, where practicable; and

(e) The refiner or importer pays to the U.S. Treasury an amount equal to the economic benefit of the nonconformity minus the amount expended making up the air quality detriment pursuant to paragraph (d) of this section.

SMALL REFINER PROVISIONS

§ 80.1338 What criteria must be met to qualify as a small refiner for the gasoline benzene requirements of this subpart?

(a) A small refiner is any person that demonstrates that it—

(1) Produced gasoline at a refinery by processing crude oil through refinery processing units from January 1, 2005 through December 31, 2005.

(2) Employed an average of no more than 1,500 people, based on the average

number of employees for all pay periods from January 1, 2005 through December 31, 2005.

(3) Had a corporate average crude oil capacity less than or equal to 155,000 barrels per calendar day (bpcd) for 2005.

(4) Following the submission of a small refiner application, pursuant to § 80.1340, has been approved as a small refiner for this subpart.

(b) For the purpose of determining the number of employees and the crude oil capacity under paragraph (a) of this section, the following determinations shall be observed:

(1) The refiner shall include the employees and crude oil capacity of any subsidiary companies, any parent company, subsidiaries of the parent company in which the parent has a controlling interest, and any joint venture partners.

(2) For any refiner owned by a governmental entity, the number of employees and total crude oil capacity as specified in paragraph (a) of this section shall include all employees and crude oil production of the government to which the governmental entity is a part.

(3) Any refiner owned and controlled by an Alaska Regional or Village Corporation organized pursuant to the Alaska Native Claims Settlement Act (43 U.S.C. 1601) is not considered an affiliate of such entity, or with other concerns owned by such entity, solely because of their common ownership.

(c) Notwithstanding the provisions of paragraph (a) of this section, a refiner that reactivates a refinery that it had previously operated, and that was shut down or non-operational for the entire period between January 1, 2005 and December 31, 2005, may apply for small refiner status in accordance with the provisions of § 80.1340.

§ 80.1339 Who is not eligible for the provisions for small refiners?

The following are not eligible for the hardship provisions for small refiners:

(a) A refiner with one or more refineries built after December 31, 2005.

(b) A refiner that exceeds the employee or crude oil capacity criteria under § 80.1338 but that meets these criteria after December 31, 2005, regardless of whether the reduction in employees or crude capacity is due to operational changes at the refinery or a company sale or reorganization.

(c) Importers.

(d) A refiner that produce gasoline other than by processing crude oil through refinery processing units.

(e)(1) A small refiner approved under § 80.1340 that subsequently ceases production of gasoline from processing crude oil through refinery processing units, employs more than 1,500 people, or exceeds the 155,000 bpcd crude oil capacity limit after December 31, 2005 as a result of merger with or acquisition of or by another entity, is disqualified as a small refiner, except that this shall not apply in the case of a merger between two previously approved small refiners. If disqualification occurs, the refiner shall notify EPA in writing no later than 20 days following this disqualifying event.

(2) Except as provided under paragraph (e)(3) of this section, any refiner whose status changes as specified in paragraph (e)(1) under this paragraph (b) shall meet the applicable standards of § 80.1230 within 30 months of the disqualifying event for all its refineries. However, such period shall not extend beyond December 31, 2014.

(3) A refiner may apply to EPA for an additional six months to comply with the standards of § 80.1230 if it believes that more than 30 months will be required for the necessary engineering, permitting, construction, and start-up work to be completed. Such applications must include detailed technical information supporting the need for additional time. EPA will base its decision to approve additional time on the information provided by the refiner and on other relevant information. In no case will EPA extend the compliance date beyond December 31, 2014.

(4) During the period provided under paragraph (e)(2) of this section, and any extension provided under paragraph (e)(3) of this section, the refiner may not generate gasoline benzene credits under § 80.1275(b)(3) for any of its refineries where under § 80.1342 the refiner was previously allowed to defer compliance with the standards in §§ 80.1230(a) and 80.1230(b).

(f) A small refiner approved under § 80.1340 which notifies EPA that it

wishes to withdraw its small refiner status pursuant to § 80.1340(g).

[72 FR 8544, Feb. 26, 2007, as amended at 75 FR 26131, May 11, 2010]

§ 80.1340 How does a refiner obtain approval as a small refiner?

(a) Applications for small refiner status must be submitted to EPA by December 31, 2007.

(b) For U.S. Postal delivery, applications for small refiner status must be sent to: Attn: MSAT2 Benzene, Mail Stop 6406J, U.S. Environmental Protection Agency, 1200 Pennsylvania Ave., NW., Washington, DC 20460. For commercial delivery: MSAT2 Benzene, 202–343–9038, U.S. Environmental Protection Agency, 1310 L Street, NW., Washington, DC 20005.

(c) The small refiner status application must contain the following information for the company seeking small refiner status, and for all subsidiary companies, all parent companies, all subsidiaries of the parent companies, and all joint venture partners:

(1) *Employees*. For joint ventures, the total number of employees includes the combined employee count of all corporate entities in the venture. For government-owned refiners, the total employee count includes all government employees.

(i) Pursuant to paragraph (c) of this section, a listing of each company facility and each facility's address where any employee, as specified in paragraph (a)(1) of this section, worked during the 12 months preceding January 1, 2006.

(ii) The average number of employees at each facility based upon the number of employees for each pay period for the 12 months preceding January 1, 2006.

(iii) The type of business activities carried out at each location.

(iv) In the case of a refiner that reactivates a refinery that it previously owned and operated and that was shut down or non-operational between January 1, 2005 and January 1, 2006, include the following:

(A) Pursuant to paragraph (c) of this section, a listing of each company refinery each refinery's address where any employee, as specified in paragraph (a)(1) of this section, worked since the refiner acquired or reactivated the refinery.

(B) The average number of employees at any such reactivated refinery during each calendar year since the refiner reactivated the refinery.

(C) The type of business activities carried out at each location.

(2) *Crude oil capacity*.

(i) The total corporate crude oil capacity of each refinery as reported to the Energy Information Administration (EIA) of the U.S. Department of Energy (DOE), for the period January 1, 2005 through December 31, 2005.

(ii) The information submitted to EIA is presumed to be correct. In cases where a company disagrees with this information, the company may petition EPA with appropriate data to correct the record when the company submits its application for small refiner status.

(3) The type of business activity carried out at each location.

(4) For each refinery, an indication of the small refiner option(s), pursuant to § 80.1342, intended to be utilized at the refinery.

(5) A letter signed by the president, chief operating officer or chief executive officer of the company, or his/her designee, stating that the information contained in the application is true to the best of his/her knowledge, and that the company owned the refinery as of January 1, 2006.

(6) Name, address, phone number, facsimile number, and e-mail address of a corporate contact person.

(d) Approval of a small refiner status application will be based on the information submitted under paragraph (c) of this section and any other relevant information.

(e) EPA will notify a refiner of approval or disapproval of small refiner status by letter.

(1) If approved, all refineries of the refiner may defer meeting the standard specified in § 80.1230(a) until the annual averaging period beginning January 1, 2015, and the standard specified in § 80.1230(b) until the averaging period beginning July 1, 2016.

(2) If disapproved, all refineries of the refiner must meet the standard specified in § 80.1230(a) beginning with the

annual averaging period beginning January 1, 2011, and must meet the standard specified in § 80.1230(b) beginning with the averaging period beginning July 1, 2012.

(f) If EPA finds that a refiner provided false or inaccurate information on its application for small refiner status, the refiner's small refiner status will be void *ab initio*.

(g) Prior to January 1, 2014, and upon notification to EPA, a small refiner approved per this section may withdraw its status as a small refiner. Effective on January 1 of the year following such notification, the small refiner will become subject to the standards at § 80.1230.

§ 80.1342 What compliance options are available to small refiners under this subpart?

(a) A refiner that has been approved as a small refiner under § 80.1340 may—

(1)(i) Defer meeting the standard specified in § 80.1230(a) until the annual averaging period beginning January 1, 2015; or

(ii) Meet the standard specified in § 80.1230(a) in any annual averaging period from 2011 through 2014, inclusive, provided it notifies EPA in writing no later than November 15 prior to the year in which it will produce compliant gasoline.

(2)(i) Defer meeting the standard specified in § 80.1230(b) until the averaging period beginning July 1, 2016; or

(ii) Meet the standard specified in § 80.1230(b) in any averaging period specified in § 80.1230(b)(3) prior to the averaging period beginning July 1, 2016 provided it notifies EPA in writing no later than November 15 prior to the year in which it will produce compliant gasoline.

(b) Any refiner that makes an election under paragraphs (a)(1) or (a)(2) of this section must comply with the applicable benzene standards at § 80.1230 beginning with the first averaging period subsequent to the status change.

(c) The provisions of paragraph (a) of this section shall apply separately for each of an approved small refiner's refineries.

§ 80.1343 What hardship relief provisions are available only to small refiners?

(a)(1) In the case of a small refiner approved under § 80.1340 for which compliance with the requirement at § 80.1230(a) would be feasible only through the purchase of credits, but for whom purchase of credits is not practically or economically feasible, EPA may approve a delay of the requirements applicable to the first compliance period for that refiner for up to two years.

(2) No delay in accordance with paragraph (a) of this section will be granted to any small refiner prior to the EPA issuing a review of the credit program.

(3) A small refiner may request one or more extensions of an approved delay if it can continue to demonstrate extreme difficulty in achieving compliance, through the use of credits, with the annual average benzene standard at § 80.1230(a).

(b) In the case of a small refiner approved under § 80.1340 for which compliance with the maximum average benzene requirement at § 80.1230(b) is not feasible, the refiner may apply for hardship relief under § 80.1335.

§ 80.1344 What provisions are available to a non-small refiner that acquires one or more of a small refiner's refineries?

(a) In the case of a refiner that is not an approved small refiner under § 80.1340 and that acquires a refinery from a small refiner approved under § 80.1340, the small refiner provisions of the gasoline benzene program of this subpart continue to apply to the acquired refinery for a period of up to 30 months from the date of acquisition of the refinery. In no case shall this period extend beyond December 31, 2014.

(b) A refiner may apply to EPA for up to an additional six months to comply with the standards of § 80.1230 for the acquired refinery if it believes that more than 30 months would be required for the necessary engineering, permitting, construction, and start-up work to be completed. Such applications must include detailed technical information supporting the need for additional time. EPA will base a decision

to approve additional time on information provided by the refiner and on other relevant information. In no case shall this period extend beyond December 31, 2014.

(c) A refiner that acquires a refinery from a small refiner approved per § 80.1340 shall notify EPA in writing no later than 20 days following the acquisition.

SAMPLING, TESTING AND RETENTION REQUIREMENTS

§ 80.1347 What are the sampling and testing requirements for refiners and importers?

(a) *Sample and test each batch of gasoline.* (1) The sampling and testing requirements specified in subpart D for reformulated gasoline shall continue to apply to reformulated gasoline and shall be extended to conventional gasoline (CG) for the purpose of complying with the benzene requirements of this subpart, except as modified by paragraphs (a)(2), (a)(3) and (a)(4) of this section.

(2) Refiners and importers shall collect a representative sample from each batch of gasoline produced or imported, according to the earliest applicable date in the following schedule:

(i) Beginning January 1, 2011;

(ii) Beginning January 1, 2015 for small refiners approved under § 80.1340;

(iii) Beginning January 1 of the year prior to 2015 in which a small refiner approved under § 80.1340 has opted, per § 80.1342(a), to begin meeting the standards at § 80.1230;

(iv) Beginning June 1, 2007, for any refinery planning to generate early credits for the averaging period specified at § 80.1275(b)(1);

(v) Beginning January 1 of each averaging period specified at § 80.1275(b)(2) or (b)(3) for which the refinery plans to generate early credits;

(vi) Beginning January 1 of the year, per § 80.1334(c)(1), in which a refinery approved for early compliance under § 80.1334 opts to begin early compliance. The provisions shall only apply to the type of gasoline, RFG or CG, for which early compliance was approved.

(3)(i) Each sample shall be tested in accordance with the methodology specified at § 80.46(e) to determine its benzene concentration for compliance with the requirements of this subpart.

(ii) Independent sample analysis, under § 80.65(f), is not required for conventional gasoline.

(4) Any refiner or importer may release CG prior to obtaining the test results for benzene required under paragraph (a)(1) of this section.

(5) *Exclusion of previously certified gasoline.* (i) Any refiner who uses previously certified reformulated or conventional gasoline or RBOB to produce conventional gasoline at a refinery, must exclude the previously certified gasoline (''PCG'') for purposes of demonstrating compliance with the benzene standards at § 80.1230.

(ii) To accomplish the exclusion required in paragraph (a)(5)(i) of this section, the refiner must determine the volume and benzene content of the previously certified gasoline used at the refinery and the volume and benzene content of gasoline produced at the refinery, and use the compliance calculation procedures in paragraphs (a)(5)(iii) and (a)(5)(iv) of this section.

(iii) For each batch of previously certified gasoline that is used to produce conventional gasoline the refiner must include the volume and benzene content of the previously certified gasoline as a negative volume and a negative benzene content in the refiner's compliance calculations in accordance with the requirements at § 80.1238.

(iv) For each batch of conventional gasoline produced at the refinery using previously certified gasoline, the refiner must determine the volume and benzene content and include each batch in the refinery's compliance calculations at § 80.1240 without regard to the presence of previously certified gasoline in the batch.

(v) The refiner must use any previously certified gasoline that it includes as a negative batch in its compliance calculations pursuant to § 80.1240 as a component in gasoline production during the annual averaging period in which the previously certified gasoline was included as a negative batch in the refiner's compliance calculations.

(b) *Batch numbering.* The batch numbering convention of § 80.365(b) shall

apply to batches of conventional gasoline beginning with earliest applicable date specified in paragraph (a)(2) of this section.

§ 80.1348 What gasoline sample retention requirements apply to refiners and importers?

Beginning with earliest applicable date specified in § 80.1347(a)(2), the gasoline sample retention requirements specified in subpart H of this part for the gasoline sulfur provisions apply for the purpose of complying with the requirements of this subpart, except that in addition to including the sulfur test result as provided by § 80.335(a)(4)(ii), the refiner, importer, or independent laboratory shall also include with the retained sample the test result for benzene as conducted pursuant to § 80.46(e).

RECORDKEEPING AND REPORTING REQUIREMENTS

§ 80.1350 What records must be kept?

(a) *General requirements.* The recordkeeping requirements specified in §§ 80.74 and 80.104, as applicable, apply for the purpose of complying with the requirements of this subpart; however, duplicate records are not required.

(b) *Additional records that refiners and importers shall keep.* (1) Beginning with earliest applicable date specified in § 80.1347(a)(2), any refiner for each of its refineries, and any importer for the gasoline it imports, shall keep records that include the following information, as applicable:

(i) Its compliance benzene value per § 80.1240, and the calculations used to obtain that value.

(ii) Its benzene baseline value, per § 80.1280, if the refinery or importer submitted a benzene baseline application to EPA per § 80.1285.

(iii) The number of early benzene credits generated under § 80.1275, separately by year of generation.

(iv) The number of early benzene credits obtained, separately by generating refinery and year of generation.

(v) The number of valid credits in possession of the refinery or importer at the beginning of each averaging period, separately by generating facility and year of generation.

(vi) The number of standard credits generated by the refinery or importer under § 80.1290, separately by transferor (if applicable), by facility and by year of generation.

(vii) The number of credits used, separately by generating facility and year of generation.

(viii) If any credits were obtained from, or transferred to, other parties, for each other party, its name, its EPA refinery or importer registration number, and the number of credits obtained from, or transferred to, the other party, and the price per credit.

(ix) The number of credits that expired at the end of each averaging period, separately by generating facility and year of generation.

(x) The number of credits that will be carried over into a subsequent averaging period, separately by generating facility and year of generation.

(xi) Contracts or other commercial documents that establish each transfer of credits from the transferor to the transferee.

(xii) A copy of all reports submitted to EPA under §§ 80.1352 and 80.1354; however, duplicate records are not required.

(2)(i) Beginning July 1, 2012, any refiner for each of its refineries, and any importer for the gasoline it imports, shall include, in the records required by paragraph (b)(1) of this section, its maximum average benzene value for the period July 1, 2012 through December 31, 2013, and for each annual compliance period thereafter.

(ii) Notwithstanding the requirements specified in paragraph (b)(2)(i) of this section, beginning July 1, 2016, a small refiner approved under § 80.1340, for each of its refineries, shall include, in the records required by paragraph (b)(1) of this section, its maximum average benzene value for the period July 1, 2016 through December 31, 2017, and for each annual compliance period thereafter.

(3) Records of all supporting calculations pursuant to paragraphs (b)(1) or (b)(2) of this section shall also be kept.

(c) *Length of time records shall be kept.* Records required in this section shall be kept for five years from the date they were created, except that records relating to credit transfers shall be

kept by the transferor for five years from the date the credits were transferred, and shall be kept by the transferee for five years from the date the credits were transferred, used or terminated, whichever is later.

(d) *Make records available to EPA.* On request by EPA, the records specified in this section shall be provided to the Administrator. For records that are electronically generated or maintained, the equipment and software necessary to read the records shall be made available, or upon approval by EPA, electronic records shall be converted to paper documents which shall be provided to the Administrator.

§ 80.1352 What are the pre-compliance reporting requirements for the gasoline benzene program?

(a) Except as provided in paragraph (c) of this section, a refiner for each of its refineries shall submit the following information, as applicable, to EPA by June 1, 2008 and annually thereafter through June 1, 2011, or through June 1, 2015 for small refiners approved under § 80.1340:

(1) Changes to the information submitted in the company's registration;

(2) Changes to the information submitted for any refinery or import facility registration;

(3) *Gasoline production.* (i) An estimate of the average daily volume (in gallons) of gasoline produced at each refinery. This estimate shall include RFG, RBOB, conventional gasoline and conventional gasoline blendstock that becomes finished gasoline solely upon the addition of oxygenate but shall exclude gasoline exempted pursuant to § 80.1235.

(ii) The volume estimates specified in paragraph (a)(3)(i) of this section must be provided for the periods of June 1, 2007 through December 31, 2007, and calendar years 2008 through 2015.

(4) *Benzene concentration.* An estimate of the average gasoline benzene concentration corresponding to the time periods specified in paragraph (a)(3)(ii) of this section.

(5) *ABT participation.* For each year through 2015, the following information related to crdits shall be provided to EPA, if applicable:

(i) If the refinery is expecting to generate benzene credits per § 80.1275 and/or § 80.1290, the actual or estimated, as applicable, numbers of early credits and standard credits expected to be generated.

(ii) If the refinery is expecting to use benzene credits per § 80.1295, the actual or estimated, as applicable, numbers of early credits and standard credits expected to be banked, transferred or used to achieve compliance in accordance with § 80.1240.

(6) Information on any project schedule by quarter of known or projected completion date, by the stage of the project. See, for example, the five project phases described in EPA's June 2002 Highway Diesel Progress Review report (EPA420–R–02–016, *http://www.epa.gov/otaq/regs/hd2007/420r02016.pdf*): Strategic planning, Planning and front-end engineering, Detailed engineering and permitting, Procurement and Construction, and Commissioning and startup.

(7) Basic information regarding the selected technology pathway for compliance (*e.g.*, precursor re-routing or other technologies, revamp vs. grassroots, etc.).

(8) Whether capital commitments have been made or are projected to be made.

(b) The pre-compliance reports due in 2008 and succeeding years must provide an update of the progress in each of these areas and include actual values where available.

(c) The pre-compliance reporting requirements of this section do not apply to refineries that only produce products exempt from the requirements of this subpart per § 80.1235(b).

§ 80.1354 What are the reporting requirements for the gasoline benzene program?

(a) Beginning with earliest applicable date specified in § 80.1347(a)(2), any refiner for each of its refineries, and any importer for the gasoline it imports, shall submit to EPA an Annual Gasoline Benzene Report that contains the information required in this section, and such other information as EPA may require for each applicable averaging period.

(b) The Annual Gasoline Benzene Report shall contain the following information:

(1) Benzene volume percent and volume of any RFG, RBOB, and conventional gasoline, separately by batch, produced by the refinery or imported, and the sum of the volumes and the volume-weighted benzene concentration, in volume percent.

(2)(i) The annual average benzene concentration, per § 80.1238.

(ii) The maximum average benzene concentration per § 80.1240(b).

(3) Any benzene deficit from the previous reporting period, per § 80.1230(b).

(4) The number of banked benzene credits from the previous reporting period.

(5) The number of benzene credits generated under § 80.1275, if applicable.

(6) The number of benzene credits generated under § 80.1290, if applicable.

(7) The number of benzene credits transferred to the refinery or importer, per § 80.1295(c), and the cost of the credits, if applicable.

(8) The number of benzene credits transferred from the refinery or importer, per § 80.1295(c), and the price of the credits, if applicable.

(9) The number of benzene credits terminated or expired.

(10) The compliance benzene value per § 80.1240.

(11) The number of banked benzene credits.

(12) Projected credit generation through compliance year 2015.

(13) Projected credit use through compliance year 2015.

(c) EPA may require submission of additional information to verify compliance with the requirements of this subpart.

(d) The report required by paragraph (a) of this section shall be—

(1) Submitted on forms and following procedures specified by the Administrator.

(2) Submitted to EPA by the last day of February each year for the prior calendar year averaging period.

(3) Signed and certified as correct by the owner or a responsible corporate officer of the refiner or importer.

ATTEST ENGAGEMENTS

§ 80.1356 What are the attest engagement requirements for gasoline benzene compliance?

In addition to the requirements for attest engagements that apply to refiners and importers under §§ 80.125 through 80.130, 80.410, and 80.1030, the attest engagements for refiners and importers must include the following:

(a) *EPA Early Credit Generation Baseline Years' Reports*. (1) Obtain and read a copy of the refinery's or importer's annual reports and batch reports filed with EPA for 2004 and 2005 that contain gasoline benzene and gasoline volume information.

(2) Agree the yearly volumes of gasoline and benzene concentration, in volume percent and benzene gallons, reported to EPA in the reports specified in paragraph (a)(1) of this section with the inventory reconciliation analysis under § 80.128.

(3) Verify that the information in the refinery's or importer's batch reports filed with EPA under §§ 80.75 and 80.105, and any laboratory test results, agree with the information contained in the reports specified in paragraph (a)(1) of this section.

(4) Calculate the average benzene concentration for all of the refinery's or importer's gasoline volume over 2004 and 2005 and verify that those values agree with the values reported to EPA per § 80.1285.

(b) *Baseline for Early Credit Generation*. Take the following steps for the first attest reporting period following approval of a benzene baseline:

(1) Obtain the EPA benzene baseline approval letter for the refinery to determine the refinery's applicable benzene baseline under § 80.1285.

(2) Obtain a written statement from the company representative identifying the benzene value used as the refinery's baseline and agree that number to paragraph (b)(1) of this section and to the reports to EPA.

(c) *Early Credit Generation*. The following procedures shall be completed for a refinery or importer that generates early benzene credits per § 80.1275:

(1) Obtain the baseline benzene concentration and gasoline volume from paragraph (a)(4) of this section.

(2) Obtain the annual benzene report per § 80.1354.

(3) If the benzene value under paragraph (c)(2) of this section is at least 10 percent less than the value in paragraph (c)(1) of this section, compute and report as a finding the difference according to § 80.1275.

(4) Compute and report as a finding the total number of benzene credits generated by multiplying the value calculated in paragraph (c)(3) of this section by the volume of gasoline listed in the report specified in paragraph (c)(2) of this section, and agree this number with the number reported to EPA.

(d) *Standard Credit Generation*. The following procedures shall be completed for a refinery or importer that generates benzene credits per § 80.1290:

(1) Obtain the annual average benzene value from the annual benzene report per § 80.1285.

(2) If the annual average benzene value under paragraph (d)(1) of this section is less than 0.62 percent by volume, compute and report as a finding the difference according to § 80.1290.

(3) Compute and report as a finding the total number of benzene credits generated by multiplying the value calculated in paragraph (d)(2) of this section by the volume of gasoline listed in the report specified in paragraph (d)(1) of this section, and agree this number with the number reported to EPA.

(e) *Credits Required*. The following attest procedures shall be completed for refineries and importers:

(1) Obtain the annual average benzene concentration and volume from the annual benzene report per § 80.1285.

(2) If the value in paragraph (e)(1) of this section is greater than 0.62 percent by volume, compute and report as a finding the difference between 0.62 percent by volume and the value in paragraph (e)(1) of this section.

(3) Compute and report as a finding the total benzene credits required by multiplying the value in paragraph (e)(2) of this section times the volume of gasoline in paragraph (e)(1) of this section, and agree this number with the report to EPA.

(4) Obtain a statement from the refiner or importer as to the portion of the deficit under paragraph (e)(3) of this section that was resolved with credits, or that was carried forward as a deficit under § 80.1230(b), and agree these figures with the report to EPA.

(f) *Credit Purchases and Sales*. The following attest procedures shall be completed for a refinery or importer that is a transferor or transferee of credits during an averaging period:

(1) Obtain contracts or other documents for all credits transferred to another refinery or importer during the year being reviewed; compute and report as a finding the number and year of creation of credits represented in these documents as being transferred; and agree these figures with the report to EPA.

(2) Obtain contracts or other documents for all credits received during the year being reviewed; compute and report as a finding the number and year of creation of credits represented in these documents as being received; and agree with the report to EPA.

(g) *Credit Reconciliation*. The following attest procedures shall be completed each year credits were in the refiner's or importer's possession at any time during the year:

(1) Obtain the credits remaining or the credit deficit from the previous year from the refiner's or importer's report to EPA for the previous year.

(2) Compute and report as a finding the net credits remaining at the conclusion of the year being reviewed by totaling credits as follows:

(i) Credits remaining from the previous year; plus

(ii) Credits generated under paragraphs (c) and (d) of this section; plus

(iii) Credits purchased under paragraph (f) of this section; minus

(iv) Credits sold under paragraph (f) of this section; minus

(v) Credits used under paragraphs (e) of this section; minus

(vi) Credits expired; minus

(vii) Credit deficit from the previous year.

(3) Agree the credits remaining or the credit deficit at the conclusion of the

year being reviewed with the report to EPA.

(4) If the refinery or importer had a credit deficit for both the previous year and the year being reviewed, report this fact as a finding.

VIOLATIONS AND PENALTIES

§ 80.1358 What acts are prohibited under the gasoline benzene program?

No person shall—

(a)(1) Produce or import gasoline subject to this subpart that does not comply with the applicable benzene standards under § 80.1230.

(2) Fail to meet any other requirements of this subpart.

(b) Cause another person to commit an act in violation of paragraph (a) of this section.

§ 80.1359 What evidence may be used to determine compliance with the prohibitions and requirements of this subpart and liability for violations of this subpart?

(a) Compliance with the benzene standards of this subpart shall be determined based on the benzene concentration of the gasoline, measured using the methodologies specified in § 80.46(e), and other allowable adjustments. Any evidence or information, including the exclusive use of such evidence or information, may be used to establish the benzene concentration of the gasoline if the evidence or information is relevant to whether the benzene concentration of the gasoline would have been in compliance with the standard if the appropriate sampling and testing methodologies had been correctly performed. Such evidence may be obtained from any source or location and may include, but is not limited to, test results using methods other than those specified in § 80.46(e), business records, and commercial documents.

(b) Determinations of compliance with the requirements of this subpart other than the benzene standards, and determinations of liability for any violation of this subpart, may be based on information from any source or location. Such information may include, but is not limited to, business records and commercial documents.

§ 80.1360 Who is liable for violations under the gasoline benzene program?

(a) The following persons are liable for violations of prohibited acts:

(1) Any refiner or importer that violates § 80.1358(a) is liable for the violation.

(2) Any person that causes another party to violate § 80.1358(a) is liable for a violation of § 80.1358(b).

(3) Any parent corporation is liable for any violations of this subpart that are committed by any of its wholly-owned subsidiaries.

(4) Each partner to a joint venture, or each owner of a facility owned by two or more owners, is jointly and severally liable for any violation of this subpart that occurs at the joint venture facility or a facility that is owned by the joint owners, or a facility that is committed by the joint venture operation or any of the joint owners of the facility.

(b) Any person who violates § 80.1358 is liable for the violation.

§ 80.1361 What penalties apply under the gasoline benzene program?

(a) Any person liable for a violation under § 80.1360 is subject to civil penalties as specified in sections 205 and 211(d) of the Clean Air Act for every day of each such violation and the amount of economic benefit or savings resulting from each violation.

(b) Any person liable under § 80.1358(a) and (b) for a violation of the applicable benzene standards or causing another person to violate the requirements during any averaging period, is subject to a separate day of violation for each and every day in the averaging period. Any person liable under § 80.1360(b) for a failure to fulfill any requirement of credit generation, transfer, use, banking, or deficit carryforward correction is subject to a separate violation for each and every day in the averaging period in which invalid credits are generated, banked, transferred or used.

(c) Any person liable under § 80.1360(b) for failure to meet, or causing a failure to meet, a provision of this subpart is liable for a separate day of violation for each and every day such provision remains unfulfilled.

FOREIGN REFINERS

§ 80.1363 What are the additional requirements under this subpart for gasoline produced at foreign refineries?

(a) *Definitions.*

(1) A *foreign refinery* is a refinery that is located outside the United States, the Commonwealth of Puerto Rico, the Virgin Islands, Guam, American Samoa, and the Commonwealth of the Northern Mariana Islands (collectively referred to in this section as ''the United States'').

(2) A *foreign refiner* is a person that meets the definition of refiner under § 80.2(i) for a foreign refinery.

(3) *Benzene-FRGAS* means gasoline produced at a foreign refinery that has been assigned an individual refinery benzene baseline under § 80.1285, has been approved as a small refiner under § 80.1340, or has been granted temporary relief under § 80.1335, and that is imported into the United States.

(4) *Non-Benzene-FRGA*S means

(i) Gasoline meeting any of the conditions specified in paragraph (a)(3) of this section that is not imported into the United States.

(ii) Gasoline meeting any of the conditions specified in paragraph (a)(3) of this section during a year when the foreign refiner has opted to not participate in the Benzene-FRGAS program under paragraph (c)(3) of this section.

(iii) Gasoline produced at a foreign refinery that has not been assigned an individual refinery benzene baseline under § 80.1285, or that has not been approved as a small refiner under § 80.1340, or that has not been granted temporary relief under § 80.1335.

(5) *Certified Benzene-FRGAS* means Benzene-FRGAS the foreign refiner intends to include in the foreign refinery's benzene compliance calculations under § 80.1240 or credit calculations under § 80.1275 and does include in these calculations when reported to EPA.

(6) *Non-Certified Benzene-FRGAS* means Benzene-FRGAS that is not Certified Benzene-FRGAS.

(b) *Baseline for Early Credits.* For any foreign refiner to obtain approval under the benzene foreign refiner program of this subpart for any refinery in order to generate early credits under § 80.1275, it must apply for approval under the applicable provisions of this subpart.

(1) The refiner shall follow the procedures specified in §§ 80.1280 and 80.1285 to establish a baseline of the volume of gasoline that was produced at the refinery and imported into the United States during the applicable years.

(2) In making determinations for foreign refinery baselines EPA will consider all information supplied by a foreign refiner, and in addition may rely on any and all appropriate assumptions necessary to make such determinations.

(3) Where a foreign refiner submits a petition that is incomplete or inadequate to establish an accurate baseline, and the refiner fails to correct this deficiency after a request for more information, EPA will not assign an individual refinery baseline.

(c) *General requirements for Benzene-FRGAS foreign refiners.* A foreign refiner of a refinery that is approved under the benzene foreign refiner program of this subpart must designate each batch of gasoline produced at the foreign refinery that is exported to the United States as either Certified Benzene-FRGAS or as Non-Certified Benzene-FRGAS, except as provided in paragraph (c)(3) of this section.

(1) In the case of Certified Benzene-FRGAS, the foreign refiner must meet all requirements that apply to refiners under this subpart.

(2) In the case of Non-Certified Benzene-FRGAS, the foreign refiner shall meet all the following requirements:

(i) The designation requirements in this section;

(ii) The recordkeeping requirements in this section and in § 80.1350;

(iii) The reporting requirements in this section and in §§ 80.1352 and 80.1354;

(iv) The product transfer document requirements in this section;

(v) The prohibitions in this section and in § 80.1358; and

(vi) The independent audit requirements in this section and in § 80.1356.

(3)(i) Any foreign refiner that generates early benzene credits under § 80.1275 shall designate all Benzene-FRGAS as Certified Benzene-FRGAS for any year that such credits are generated.

(ii) Any foreign refiner that has been approved to produce gasoline subject to the benzene foreign refiner program for a foreign refinery under this subpart may elect to classify no gasoline imported into the United States as Benzene-FRGAS provided the foreign refiner notifies EPA of the election no later than November 1 preceding the beginning of the next compliance period.

(iii) An election under paragraph (c)(3)(ii) of this section shall be for a 12 month compliance period and apply to all gasoline that is produced by the foreign refinery that is imported into the United States, and shall remain in effect for each succeeding year unless and until the foreign refiner notifies EPA of the termination of the election. The change in election shall take effect at the beginning of the next annual compliance period.

(d) *Designation, product transfer documents, and foreign refiner certification.* (1) Any foreign refiner of a foreign refinery that has been approved by EPA to produce gasoline subject to the benzene foreign refiner program must designate each batch of Benzene-FRGAS as such at the time the gasoline is produced, unless the refiner has elected to classify no gasoline exported to the United States as Benzene-FRGAS under paragraph (c)(3) of this section.

(2) On each occasion when any person transfers custody or title to any Benzene-FRGAS prior to its being imported into the United States, it must include the following information as part of the product transfer document information:

(i) Designation of the gasoline as Certified Benzene-FRGAS or as Non-Certified Benzene-FRGAS; and

(ii) The name and EPA refinery registration number of the refinery where the Benzene-FRGAS was produced.

(3) On each occasion when Benzene-FRGAS is loaded onto a vessel or other transportation mode for transport to the United States, the foreign refiner shall prepare a certification for each batch of the Benzene-FRGAS that meets the following requirements.

(i) The certification shall include the report of the independent third party under paragraph (f) of this section, and the following additional information:

(A) The name and EPA registration number of the refinery that produced the Benzene-FRGAS;

(B) The identification of the gasoline as Certified Benzene-FRGAS or Non-Certified Benzene-FRGAS;

(C) The volume of Benzene-FRGAS being transported, in gallons;

(D) In the case of Certified Benzene-FRGAS:

(*1*) The benzene content as determined under paragraph (f) of this section, and the applicable designations stated in paragraph (d)(2)(i) of this section; and

(*2*) A declaration that the Benzene-FRGAS is being included in the applicable compliance calculations required by EPA under this subpart.

(ii) The certification shall be made part of the product transfer documents for the Benzene-FRGAS.

(e) *Transfers of Benzene-FRGAS to non-United States markets.* The foreign refiner is responsible to ensure that all gasoline classified as Benzene-FRGAS is imported into the United States. A foreign refiner may remove the Benzene-FRGAS classification, and the gasoline need not be imported into the United States, but only if:

(1) The foreign refiner excludes:

(i) The volume of gasoline from the refinery's compliance report under § 80.1354; and

(ii) In the case of Certified Benzene-FRGAS, the volume of the gasoline from the compliance report under § 80.1354.

(2) The foreign refiner obtains sufficient evidence in the form of documentation that the gasoline was not imported into the United States.

(f) *Load port independent sampling, testing and refinery identification.* (1) On each occasion that Benzene-FRGAS is loaded onto a vessel for transport to the United States a foreign refiner shall have an independent third party:

(i) Inspect the vessel prior to loading and determine the volume of any tank bottoms;

(ii) Determine the volume of Benzene-FRGAS loaded onto the vessel (exclusive of any tank bottoms before loading);

(iii) Obtain the EPA-assigned registration number of the foreign refinery;

(iv) Determine the name and country of registration of the vessel used to transport the Benzene-FRGAS to the United States; and

(v) Determine the date and time the vessel departs the port serving the foreign refinery.

(2) On each occasion that Certified Benzene-FRGAS is loaded onto a vessel for transport to the United States a foreign refiner shall have an independent third party:

(i) Collect a representative sample of the Certified Benzene-FRGAS from each vessel compartment subsequent to loading on the vessel and prior to departure of the vessel from the port serving the foreign refinery;

(ii) Determine the benzene content value for each compartment using the methodology as specified in § 80.46(e) by one of the following:

(A) The third party analyzing each sample; or

(B) The third party observing the foreign refiner analyze the sample;

(iii) Review original documents that reflect movement and storage of the Certified Benzene-FRGAS from the refinery to the load port, and from this review determine:

(A) The refinery at which the Benzene-FRGAS was produced; and

(B) That the Benzene-FRGAS remained segregated from:

(*1*) Non-Benzene-FRGAS and Non-Certified Benzene-FRGAS; and

(*2*) Other Certified Benzene-FRGAS produced at a different refinery.

(3) The independent third party shall submit a report:

(i) To the foreign refiner containing the information required under paragraphs (f)(1) and (f)(2) of this section, to accompany the product transfer documents for the vessel; and

(ii) To the Administrator containing the information required under paragraphs (f)(1) and (f)(2) of this section, within thirty days following the date of the independent third party's inspection. This report shall include a description of the method used to determine the identity of the refinery at which the gasoline was produced, assurance that the gasoline remained segregated as specified in paragraph (n)(1) of this section, and a description of the gasoline's movement and storage between production at the source refinery and vessel loading.

(4) The independent third party must:

(i) Be approved in advance by EPA, based on a demonstration of ability to perform the procedures required in this paragraph (f);

(ii) Be independent under the criteria specified in § 80.65(f)(2)(iii); and

(iii) Sign a commitment that contains the provisions specified in paragraph (i) of this section with regard to activities, facilities and documents relevant to compliance with the requirements of this paragraph (f).

(g) *Comparison of load port and port of entry testing.* (1)(i) Any foreign refiner and any United States importer of Certified Benzene-FRGAS shall compare the results from the load port testing under paragraph (f) of this section, with the port of entry testing as reported under paragraph (o) of this section, for the volume of gasoline and the benzene content value; except as specified in paragraph (g)(1)(ii) of this section.

(ii) Where a vessel transporting Certified Benzene-FRGAS off loads this gasoline at more than one United States port of entry, and the conditions of paragraph (g)(2)(i) of this section are met at the first United States port of entry, the requirements of paragraph (g)(2) of this section do not apply at subsequent ports of entry if the United States importer obtains a certification from the vessel owner that meets the requirements of paragraph (s) of this section, that the vessel has not loaded any gasoline or blendstock between the first United States port of entry and the subsequent port of entry.

(2)(i) The requirements of this paragraph (g)(2) apply if—

(A) The temperature-corrected volumes determined at the port of entry and at the load port differ by more than one percent; or

(B) The benzene content value determined at the port of entry is higher than the benzene content value determined at the load port, and the amount of this difference is greater than the reproducibility amount specified for the port of entry test result by the American Society of Testing and Materials (ASTM) for the test method specified at § 80.46(e).

(ii) The United States importer and the foreign refiner shall treat the gasoline as Non-Certified Benzene-FRGAS, and the foreign refiner shall exclude the gasoline volume from its gasoline volumes calculations and benzene standard designations under this subpart.

(h) *Attest requirements.* Refiners, for each annual compliance period, must arrange to have an attest engagement performed of the underlying documentation that forms the basis of any report required under this subpart. The attest engagement must comply with the procedures and requirements that apply to refiners under §§ 80.125 through 80.130, 80.1356, and other applicable attest engagement provisions, and must be submitted to the Administrator of EPA for the prior annual compliance period within the time period required under § 80.130. The following additional procedures shall be carried out for any foreign refiner of Benzene-FRGAS.

(1) The inventory reconciliation analysis under § 80.128(b) and the tender analysis under § 80.128(c) shall include Non-Benzene-FRGAS.

(2) Obtain separate listings of all tenders of Certified Benzene-FRGAS and of Non-Certified Benzene-FRGAS, and obtain separate listings of Certified Benzene-FRGAS based on whether it is small refiner gasoline, gasoline produced through the use of credits, or other applicable designation under this subpart. Agree the total volume of tenders from the listings to the gasoline inventory reconciliation analysis in § 80.128(b), and to the volumes determined by the third party under paragraph (f)(1) of this section.

(3) For each tender under paragraph (h)(2) of this section, where the gasoline is loaded onto a marine vessel, report as a finding the name and country of registration of each vessel, and the volumes of Benzene-FRGAS loaded onto each vessel.

(4) Select a sample from the list of vessels identified in paragraph (h)(3) of this section used to transport Certified Benzene-FRGAS, in accordance with the guidelines in § 80.127, and for each vessel selected perform the following:

(i) Obtain the report of the independent third party, under paragraph (f) of this section, and of the United States importer under paragraph (o) of this section.

(A) Agree the information in these reports with regard to vessel identification, gasoline volumes and benzene content test results.

(B) Identify, and report as a finding, each occasion the load port and port of entry benzene content and volume results differ by more than the amounts allowed in paragraph (g) of this section, and determine whether the foreign refiner adjusted its refinery calculations as required in paragraph (g) of this section.

(ii) Obtain the documents used by the independent third party to determine transportation and storage of the Certified Benzene-FRGAS from the refinery to the load port, under paragraph (f) of this section. Obtain tank activity records for any storage tank where the Certified Benzene-FRGAS is stored, and pipeline activity records for any pipeline used to transport the Certified Benzene-FRGAS, prior to being loaded onto the vessel. Use these records to determine whether the Certified Benzene-FRGAS was produced at the refinery that is the subject of the attest engagement, and whether the Certified Benzene-FRGAS was mixed with any Non-Certified Benzene-FRGAS, Non-Benzene-FRGAS, or any Certified Benzene-FRGAS produced at a different refinery.

(5) Select a sample from the list of vessels identified in paragraph (h)(3) of this section used to transport Certified and Non-Certified Benzene-FRGAS, in accordance with the guidelines in § 80.127, and for each vessel selected perform the following:

(i) Obtain a commercial document of general circulation that lists vessel arrivals and departures, and that includes the port and date of departure of the vessel, and the port of entry and date of arrival of the vessel.

(ii) Agree the vessel's departure and arrival locations and dates from the independent third party and United States importer reports to the information contained in the commercial document.

(6) Obtain separate listings of all tenders of Non-Benzene-FRGAS, and perform the following:

(i) Agree the total volume and benzene content of tenders from the listings to the gasoline inventory reconciliation analysis in § 80.128(b).

(ii) Obtain a separate listing of the tenders under this paragraph (h)(6) where the gasoline is loaded onto a marine vessel. Select a sample from this listing in accordance with the guidelines in § 80.127, and obtain a commercial document of general circulation that lists vessel arrivals and departures, and that includes the port and date of departure and the ports and dates where the gasoline was off loaded for the selected vessels. Determine and report as a finding the country where the gasoline was off loaded for each vessel selected.

(7) In order to complete the requirements of this paragraph (h) an auditor shall:

(i) Be independent of the foreign refiner;

(ii) Be licensed as a Certified Public Accountant in the United States and a citizen of the United States, or be approved in advance by EPA based on a demonstration of ability to perform the procedures required in §§ 80.125 through 80.130 and this paragraph (h); and

(iii) Sign a commitment that contains the provisions specified in paragraph (i) of this section with regard to activities and documents relevant to compliance with the requirements of §§ 80.125 through 80.130 and this paragraph (h).

(i) *Foreign refiner commitments.* Any foreign refiner shall commit to and comply with the provisions contained in this paragraph (i) as a condition to being approved as a foreign refiner under this subpart.

(1) Any United States Environmental Protection Agency inspector or auditor must be given full, complete and immediate access to conduct inspections and audits of the foreign refinery.

(i) Inspections and audits may be either announced in advance by EPA, or unannounced.

(ii) Access will be provided to any location where:

(A) Gasoline is produced;

(B) Documents related to refinery operations are kept;

(C) Gasoline or blendstock samples are tested or stored; and

(D) Benzene-FRGAS is stored or transported between the foreign refinery and the United States, including storage tanks, vessels and pipelines.

(iii) Inspections and audits may be by EPA employees or contractors to EPA.

(iv) Any documents requested that are related to matters covered by inspections and audits must be provided to an EPA inspector or auditor on request.

(v) Inspections and audits by EPA may include review and copying of any documents related to:

(A) Refinery baseline establishment, if applicable, including the volume and benzene content of gasoline; transfers of title or custody of any gasoline or blendstocks whether Benzene-FRGAS or Non-Benzene-FRGAS, produced at the foreign refinery during the period January 1, 2004 through December 31, 2005, and any work papers related to refinery baseline establishment;

(B) The volume and benzene content of Benzene-FRGAS;

(C) The proper classification of gasoline as being Benzene-FRGAS or as not being Benzene-FRGAS, or as Certified Benzene-FRGAS or as Non-Certified Benzene-FRGAS, and all other relevant designations under this subpart;

(D) Transfers of title or custody to Benzene-FRGAS;

(E) Sampling and testing of Benzene-FRGAS;

(F) Work performed and reports prepared by independent third parties and by independent auditors under the requirements of this section, including work papers; and

(G) Reports prepared for submission to EPA, and any work papers related to such reports.

(vi) Inspections and audits by EPA may include taking samples of gasoline, gasoline additives or blendstock, and interviewing employees.

(vii) Any employee of the foreign refiner must be made available for interview by the EPA inspector or auditor, on request, within a reasonable time period.

(viii) English language translations of any documents must be provided to an EPA inspector or auditor, on request, within 10 working days.

(ix) English language interpreters must be provided to accompany EPA inspectors and auditors, on request.

(2) An agent for service of process located in the District of Columbia shall be named, and service on this agent constitutes service on the foreign refiner or any employee of the foreign refiner for any action by EPA or otherwise by the United States related to the requirements of this subpart.

(3) The forum for any civil or criminal enforcement action related to the provisions of this section for violations of the Clean Air Act or regulations promulgated thereunder shall be governed by the Clean Air Act, including the EPA administrative forum where allowed under the Clean Air Act.

(4) United States substantive and procedural laws shall apply to any civil or criminal enforcement action against the foreign refiner or any employee of the foreign refiner related to the provisions of this section.

(5) Submitting a petition for participation in the benzene foreign refiner program or producing and exporting gasoline under any such program, and all other actions to comply with the requirements of this subpart relating to participation in any benzene foreign refiner program, or to establish an individual refinery gasoline benzene baseline under this subpart constitute actions or activities covered by and within the meaning of the provisions of 28 U.S.C. 1605(a)(2), but solely with respect to actions instituted against the foreign refiner, its agents and employees in any court or other tribunal in the United States for conduct that violates the requirements applicable to the foreign refiner under this subpart, including conduct that violates the False Statements Accountability Act of 1996 (18 U.S.C. 1001) and section 113(c)(2) of the Clean Air Act (42 U.S.C. 7413).

(6) The foreign refiner, or its agents or employees, will not seek to detain or to impose civil or criminal remedies against EPA inspectors or auditors, whether EPA employees or EPA contractors, for actions performed within the scope of EPA employment related to the provisions of this section.

(7) The commitment required by this paragraph (i) shall be signed by the owner or president of the foreign refiner business.

(8) In any case where Benzene-FRGAS produced at a foreign refinery is stored or transported by another company between the refinery and the vessel that transports the Benzene-FRGAS to the United States, the foreign refiner shall obtain from each such other company a commitment that meets the requirements specified in paragraphs (i)(1) through (7) of this section, and these commitments shall be included in the foreign refiner's petition to participate in any benzene foreign refiner program.

(j) *Sovereign immunity*. By submitting a petition for participation in any benzene foreign refiner program under this subpart (and baseline, if applicable) under this section, or by producing and exporting gasoline to the United States under any such program, the foreign refiner, and its agents and employees, without exception, become subject to the full operation of the administrative and judicial enforcement powers and provisions of the United States without limitation based on sovereign immunity, with respect to actions instituted against the foreign refiner, its agents and employees in any court or other tribunal in the United States for conduct that violates the requirements applicable to the foreign refiner under this subpart, including conduct that violates the False Statements Accountability Act of 1996 (18 U.S.C. 1001) and section 113(c)(2) of the Clean Air Act (42 U.S.C. 7413).

(k) *Bond posting*. Any foreign refiner shall meet the requirements of this paragraph (k) as a condition to approval as benzene foreign refiner under this subpart.

(1) The foreign refiner shall post a bond of the amount calculated using the following equation:

$$\text{Bond} = G \times \$0.01$$

Where:

Bond = amount of the bond in U.S. dollars

G = the largest volume of gasoline produced at the foreign refinery and exported to the United States, in gallons, during a single calendar year among the most recent of the following calendar years, up to a maximum of five calendar years: the calendar year immediately preceding the date the refinery's baseline petition is

submitted, the calendar year the baseline petition is submitted, and each succeeding calendar year.

(2) Bonds shall be posted by:

(i) Paying the amount of the bond to the Treasurer of the United States;

(ii) Obtaining a bond in the proper amount from a third party surety agent that is payable to satisfy United States administrative or judicial judgments against the foreign refiner, provided EPA agrees in advance as to the third party and the nature of the surety agreement; or

(iii) An alternative commitment that results in assets of an appropriate liquidity and value being readily available to the United States, provided EPA agrees in advance as to the alternative commitment.

(3) Bonds posted under this paragraph (k) shall—

(i) Be used to satisfy any judicial judgment that results from an administrative or judicial enforcement action for conduct in violation of this subpart, including where such conduct violates the False Statements Accountability Act of 1996 (18 U.S.C. 1001) and section 113(c)(2) of the Clean Air Act (42 U.S.C. 7413);

(ii) Be provided by a corporate surety that is listed in the United States Department of Treasury Circular 570 ''Companies Holding Certificates of Authority as Acceptable Sureties on Federal Bonds''; and

(iii) Include a commitment that the bond will remain in effect for at least five years following the end of latest annual reporting period that the foreign refiner produces gasoline pursuant to the requirements of this subpart.

(4) On any occasion a foreign refiner bond is used to satisfy any judgment, the foreign refiner shall increase the bond to cover the amount used within 90 days of the date the bond is used.

(5) If the bond amount for a foreign refiner increases, the foreign refiner shall increase the bond to cover the shortfall within 90 days of the date the bond amount changes. If the bond amount decreases, the foreign refiner may reduce the amount of the bond beginning 90 days after the date the bond amount changes.

(l) [Reserved]

(m) *English language reports*. Any report or other document submitted to EPA by a foreign refiner shall be in English language, or shall include an English language translation.

(n) *Prohibitions*. (1) No person may combine Certified Benzene-FRGAS with any Non-Certified Benzene-FRGAS or Non-Benzene-FRGAS, and no person may combine Certified Benzene-FRGAS with any Certified Benzene-FRGAS produced at a different refinery, until the importer has met all the requirements of paragraph (o) of this section, except as provided in paragraph (e) of this section.

(2) No foreign refiner or other person may cause another person to commit an action prohibited in paragraph (n)(1) of this section, or that otherwise violates the requirements of this section.

(o) *United States importer requirements*. Any United States importer shall meet the following requirements:

(1) Each batch of imported gasoline shall be classified by the importer as being Benzene-FRGAS or as Non-Benzene-FRGAS, and each batch classified as Benzene-FRGAS shall be further classified as Certified Benzene-FRGAS or as Non-Certified Benzene-FRGAS.

(2) Gasoline shall be classified as Certified Benzene-FRGAS or as Non-Certified Benzene-FRGAS according to the designation by the foreign refiner if this designation is supported by product transfer documents prepared by the foreign refiner as required in paragraph (d) of this section, unless the gasoline is classified as Non-Certified Benzene-FRGAS under paragraph (g) of this section. Additionally, the importer shall comply with all requirements of this subpart applicable to importers.

(3) For each gasoline batch classified as Benzene-FRGAS, any United States importer shall perform the following procedures.

(i) In the case of both Certified and Non-Certified Benzene-FRGAS, have an independent third party:

(A) Determine the volume of gasoline in the vessel;

(B) Use the foreign refiner's Benzene-FRGAS certification to determine the name and EPA-assigned registration number of the foreign refinery that produced the Benzene-FRGAS;

(C) Determine the name and country of registration of the vessel used to transport the Benzene-FRGAS to the United States; and

(D) Determine the date and time the vessel arrives at the United States port of entry.

(ii) In the case of Certified Benzene-FRGAS, have an independent third party:

(A) Collect a representative sample from each vessel compartment subsequent to the vessel's arrival at the United States port of entry and prior to off loading any gasoline from the vessel;

(B) Obtain the compartment samples; and

(C) Determine the benzene content value of each compartment sample using the methodology specified at § 80.46(e) by the third party analyzing the sample or by the third party observing the importer analyze the sample.

(4) Any importer shall submit reports within 30 days following the date any vessel transporting Benzene-FRGAS arrives at the United States port of entry:

(i) To the Administrator containing the information determined under paragraph (o)(3) of this section; and

(ii) To the foreign refiner containing the information determined under paragraph (o)(3)(ii) of this section, and including identification of the port at which the product was offloaded.

(5) Any United States importer shall meet all other requirements of this subpart for any imported gasoline that is not classified as Certified Benzene-FRGAS under paragraph (o)(2) of this section.

(p) *Truck imports of Certified Benzene-FRGAS produced at a foreign refinery.* (1) Any refiner whose Certified Benzene-FRGAS is transported into the United States by truck may petition EPA to use alternative procedures to meet the following requirements:

(i) Certification under paragraph (d)(5) of this section;

(ii) Load port and port of entry sampling and testing under paragraphs (f) and (g) of this section;

(iii) Attest under paragraph (h) of this section; and

(iv) Importer testing under paragraph (o)(3) of this section.

(2) These alternative procedures must ensure Certified Benzene-FRGAS remains segregated from Non-Certified Benzene-FRGAS and from Non-Benzene-FRGAS until it is imported into the United States. The petition will be evaluated based on whether it adequately addresses the following:

(i) Provisions for monitoring pipeline shipments, if applicable, from the refinery, that ensure segregation of Certified Benzene-FRGAS from that refinery from all other gasoline;

(ii) Contracts with any terminals and/or pipelines that receive and/or transport Certified Benzene-FRGAS, that prohibit the commingling of Certified Benzene-FRGAS with any of the following:

(A) Other Certified Benzene-FRGAS from other refineries.

(B) All Non-Certified Benzene-FRGAS.

(C) All Non-Benzene-FRGAS;

(iii) Procedures for obtaining and reviewing truck loading records and United States import documents for Certified Benzene-FRGAS to ensure that such gasoline is only loaded into trucks making deliveries to the United States;

(iv) Attest procedures to be conducted annually by an independent third party that review loading records and import documents based on volume reconciliation, or other criteria, to confirm that all Certified Benzene-FRGAS remains segregated throughout the distribution system and is only loaded into trucks for import into the United States.

(3) The petition required by this section must be submitted to EPA along with the application for temporary refiner relief individual refinery benzene standard under this subpart.

(q) *Withdrawal or suspension of foreign refiner status.* EPA may withdraw or suspend a foreign refiner's benzene baseline or standard approval for a foreign refinery where—

(1) A foreign refiner fails to meet any requirement of this section;

(2) A foreign government fails to allow EPA inspections as provided in paragraph (i)(1) of this section;

(3) A foreign refiner asserts a claim of, or a right to claim, sovereign immunity in an action to enforce the requirements in this subpart; or

(4) A foreign refiner fails to pay a civil or criminal penalty that is not satisfied using the foreign refiner bond specified in paragraph (k) of this section.

(r) *Early use of a foreign refiner benzene baseline*. (1) A foreign refiner may begin using an individual refinery benzene baseline under this subpart before EPA has approved the baseline, provided that:

(i) A baseline petition has been submitted as required in paragraph (b) of this section;

(ii) EPA has made a provisional finding that the baseline petition is complete;

(iii) The foreign refiner has made the commitments required in paragraph (i) of this section;

(iv) The persons that will meet the independent third party and independent attest requirements for the foreign refinery have made the commitments required in paragraphs (f)(3)(iii) and (h)(7)(iii) of this section; and

(v) The foreign refiner has met the bond requirements of paragraph (k) of this section.

(2) In any case where a foreign refiner uses an individual refinery baseline before final approval under paragraph (r)(1) of this section, and the foreign refinery baseline values that ultimately are approved by EPA are more stringent than the early baseline values used by the foreign refiner, the foreign refiner shall recalculate its compliance, *ab initio*, using the baseline values approved by the EPA, and the foreign refiner shall be liable for any resulting violation of the requirements of this subpart.

(s) *Additional requirements for petitions, reports and certificates*. Any petition for approval to produce gasoline subject to the benzene foreign refiner program, any alternative procedures under paragraph (p) of this section, any report or other submission required by paragraph (c), (f)(2), or (i) of this section, and any certification under paragraph (d)(3) of this section shall be—

(1) Submitted in accordance with procedures specified by the Administrator, including use of any forms that may be specified by the Administrator.

(2) Be signed by the president or owner of the foreign refiner company, or by that person's immediate designee, and shall contain the following declaration:

I hereby certify: (1) That I have actual authority to sign on behalf of and to bind [insert name of foreign refiner] with regard to all statements contained herein; (2) that I am aware that the information contained herein is being Certified, or submitted to the United States Environmental Protection Agency, under the requirements of 40 CFR part 80, subpart L, and that the information is material for determining compliance under these regulations; and (3) that I have read and understand the information being Certified or submitted, and this information is true, complete and correct to the best of my knowledge and belief after I have taken reasonable and appropriate steps to verify the accuracy thereof. I affirm that I have read and understand the provisions of 40 CFR part 80, subpart L, including 40 CFR 80.1363 apply to [insert name of foreign refiner]. Pursuant to Clean Air Act section 113(c) and 18 U.S.C. 1001, the penalty for furnishing false, incomplete or misleading information in this certification or submission is a fine of up to $10,000 U.S., and/or imprisonment for up to five years.

Subpart M—Renewable Fuel Standard

SOURCE: 75 FR 14863, Mar. 26, 2010, unless otherwise noted.

§ 80.1400 Applicability.

The provisions of this subpart M shall apply for all renewable fuel produced on or after July 1, 2010, for all RINs generated on or after July 1, 2010, and for all renewable volume obligations and compliance periods starting with January 1, 2010. Except as provided otherwise in this subpart M, the provisions of subpart K of this part 80 shall not apply for such renewable fuel, RINs, renewable volume obligations, or compliance periods.

§ 80.1401 Definitions.

The definitions of § 80.2 and of this section apply for the purposes of this

subpart M. The definitions of this section do not apply to other subparts unless otherwise noted. Note that many terms defined here are common terms that have specific meanings under this subpart M. The definitions follow:

Actual peak capacity means 105% of the maximum annual volume of renewable fuels produced from a specific renewable fuel production facility on a calendar year basis.

(1) For facilities that commenced construction prior to December 19, 2007, the actual peak capacity is based on the last five calendar years prior to 2008, unless no such production exists, in which case actual peak capacity is based on any calendar year after startup during the first three years of operation.

(2) For facilities that commenced construction after December 19, 2007 and before January 1, 2010 that are fired with natural gas, biomass, or a combination thereof, the actual peak capacity is based on any calendar year after startup during the first three years of operation.

(3) For all other facilities not included above, the actual peak capacity is based on the last five calendar years prior to the year in which the owner or operator registers the facility under the provisions of § 80.1450, unless no such production exists, in which case actual peak capacity is based on any calendar year after startup during the first three years of operation.

Advanced biofuel means renewable fuel, other than ethanol derived from cornstarch, that has lifecycle greenhouse gas emissions that are at least 50 percent less than baseline lifecycle greenhouse gas emissions.

Annual cover crop means an annual crop, planted as a rotation between primary planted crops, or between trees and vines in orchards and vineyards, typically to protect soil from erosion and to improve the soil between periods of regular crops. An annual cover crop has no existing market to which it can be sold except for its use as feedstock for the production of renewable fuel.

Areas at risk of wildfire are those areas in the ''wildland-urban interface'', where humans and their development meet or intermix with wildland fuel. Note that, for guidance, the SILVIS laboratory at the University of Wisconsin maintains a Web site that provides a detailed map of areas meeting this criteria at: *http://www.silvis.forest.wisc.edu/projects/US_WUI_2000.asp*. The SILVIS laboratory is located at 1630 Linden Drive, Madison, Wisconsin 53706 and can be contacted at (608) 263–4349.

Baseline lifecycle greenhouse gas emissions means the average lifecycle greenhouse gas emissions for gasoline or diesel (whichever is being replaced by the renewable fuel) sold or distributed as transportation fuel in 2005.

Baseline volume means the permitted capacity or, if permitted capacity cannot be determined, the actual peak capacity of a specific renewable fuel production facility on a calendar year basis.

Biodiesel means a mono-alkyl ester that meets ASTM D 6751 (incorporated by reference, *see* § 80.1468).

Biogas means a mixture of hydrocarbons that is a gas at 60 degrees Fahrenheit and 1 atmosphere of pressure that is produced through the conversion of organic matter. Only biogas that is used as renewable fuel can generate RINs. Biogas includes propane, landfill gas, manure digester gas, and sewage waste treatment gas.

Biomass-based diesel means a renewable fuel that has lifecycle greenhouse gas emissions that are at least 50 percent less than baseline lifecycle greenhouse gas emissions and meets all of the requirements of paragraph (1) of this definition:

(1)(i) Is a transportation fuel, transportation fuel additive, heating oil, or jet fuel.

(ii) Meets the definition of either biodiesel or non-ester renewable diesel.

(iii) Is registered as a motor vehicle fuel or fuel additive under 40 CFR part 79, if the fuel or fuel additive is intended for use in a motor vehicle.

(2) Renewable fuel that is co-processed with petroleum is not biomass-based diesel.

Cellulosic biofuel means renewable fuel derived from any cellulose, hemicellulose, or lignin that has lifecycle greenhouse gas emissions that are at least 60 percent less than the baseline lifecycle greenhouse gas emissions.

Cellulosic diesel is any renewable fuel which meets both the definitions of cellulosic biofuel and biomass-based diesel, as defined in this section 80.1401. Cellulosic diesel includes heating oil and jet fuel made from cellulosic feedstocks.

Combined heat and power (CHP), also known as cogeneration, refers to industrial processes in which waste heat from the production of electricity is used for process energy in the renewable fuel production facility.

Co-processed means that renewable biomass was simultaneously processed with fossil fuels or other non-renewable feedstock in the same unit or units to produce a fuel that is partially derived from renewable biomass.

Corn oil extraction means the recovery of corn oil from the thin stillage and/or the distillers grains and solubles produced by a dry mill corn ethanol plant, most often by mechanical separation.

Corn oil fractionation means a process whereby seeds are divided in various components and oils are removed prior to fermentation for the production of ethanol.

Crop residue is the biomass left over from the harvesting or processing of planted crops from existing agricultural land and any biomass removed from existing agricultural land that facilitates crop management (including biomass removed from such lands in relation to invasive species control or fire management), whether or not the biomass includes any portion of a crop or crop plant.

Cropland is land used for production of crops for harvest and includes cultivated cropland, such as for row crops or close-grown crops, and non-cultivated cropland, such as for horticultural or aquatic crops.

Diesel, for the purposes of this subpart, refers to any and all of the products specified at § 80.1407(e).

Ecologically sensitive forestland means forestland that meets either of the following criteria:

(1) An ecological community with a global or state ranking of critically imperiled, imperiled or rare pursuant to a State Natural Heritage Program. For examples of such ecological communities, see ''Listing of Forest Ecological Communities Pursuant to 40 CFR 80.1401; S1–S3 communities,'' which is number EPA–HQ–OAR–2005–0161–1034.1 in the public docket, and ''Listing of Forest Ecological Communities Pursuant to 40 CFR 80.1401; G1–G2 communities,'' which is number EPA–HQ–OAR–2005–0161–2906.1 in the public docket. This material is available for inspection at the EPA Docket Center, EPA/DC, EPA West, Room 3334, 1301 Constitution Ave., NW., Washington DC. The telephone number for the Air Docket is (202) 566–1742.

(2) Old growth or late successional, characterized by trees at least 200 years in age.

Energy cane means a complex hybrid in the Saccharum genus that has been bred to maximize cellulosic rather than sugar content. For the purposes of this section, energy cane excludes the species *Saccharum spontaneum*, but includes hybrids derived from *S. spontaneum* that have been developed and publicly released by USDA.

EPA Moderated Transaction System, or EMTS, means a closed, EPA moderated system that provides a mechanism for screening and tracking Renewable Identification Numbers (RINs) as per § 80.1452.

Existing agricultural land is cropland, pastureland, and land enrolled in the Conservation Reserve Program (administered by the U.S. Department of Agriculture's Farm Service Agency) that was cleared or cultivated prior to December 19, 2007, and that, on December 19, 2007, was:

(1) Nonforested; and

(2) Actively managed as agricultural land or fallow, as evidenced by records which must be traceable to the land in question, which must include one of the following:

(i) Records of sales of planted crops, crop residue, or livestock, or records of purchases for land treatments such as fertilizer, weed control, or seeding.

(ii) A written management plan for agricultural purposes.

(iii) Documented participation in an agricultural management program administered by a Federal, state, or local government agency.

(iv) Documented management in accordance with a certification program for agricultural products.

Exporter of renewable fuel means:

(1) A person that transfers any renewable fuel from a location within the contiguous 48 states or Hawaii to a location outside the contiguous 48 states and Hawaii; and

(2) A person that transfers any renewable fuel from a location in the contiguous 48 states or Hawaii to Alaska or a United States territory, unless that state or territory has received an approval from the Administrator to opt-in to the renewable fuel program pursuant to § 80.1443.

Facility means all of the activities and equipment associated with the production of renewable fuel starting from the point of delivery of feedstock material to the point of final storage of the end product, which are located on one property, and are under the control of the same person (or persons under common control).

Fallow means cropland, pastureland, or land enrolled in the Conservation Reserve Program (administered by the U.S. Department of Agriculture's Farm Service Agency) that is intentionally left idle to regenerate for future agricultural purposes with no seeding or planting, harvesting, mowing, or treatment during the fallow period.

Foreign ethanol producer means a person from a foreign country or from an area that has not opted into the program requirements of this subpart who produces ethanol for use in transportation fuel, heating oil, or jet fuel but who does not add denaturant to their product as described in paragraph (2) of the definition of renewable fuel in this section.

Forestland is generally undeveloped land covering a minimum area of 1 acre upon which the primary vegetative species are trees, including land that formerly had such tree cover and that will be regenerated and tree plantations. Tree-covered areas in intensive agricultural crop production settings, such as fruit orchards, or tree-covered areas in urban settings, such as city parks, are not considered forestland.

Fuel for use in an ocean-going vessel means, for this subpart only:

(1) Any marine residual fuel (whether burned in ocean waters, Great Lakes, or other internal waters);

(2) Emission Control Area (ECA) marine fuel, pursuant to §§ 80.2(ttt) and 80.510(k) (whether burned in ocean waters, Great Lakes, or other internal waters); and

(3) Any other fuel intended for use only in ocean-going vessels.

Gasoline, for the purposes of this subpart, refers to any and all of the products specified at § 80.1407(c).

Heating oil has the meaning given in § 80.2(ccc).

Importers. For the purposes of this subpart, an importer of transportation fuel or renewable fuel is any U.S. domestic person who:

(1) Brings transportation fuel or renewable fuel into the 48 contiguous states of the United States or Hawaii, from a foreign country or from an area that has not opted in to the program requirements of this subpart pursuant to § 80.1443; or

(2) Brings transportation fuel or renewable fuel into an area that has opted in to the program requirements of this subpart pursuant to § 80.1443 from a foreign country or from an area that has not opted in to the program requirements of this subpart.

Membrane separation means the process of dehydrating ethanol to fuel grade (>99.5% purity) using a hydrophilic membrane.

Motor vehicle has the meaning given in Section 216(2) of the Clean Air Act (42 U.S.C. 7550(2)).

Naphtha means a blendstock falling within the boiling range of gasoline which is composed of only hydrocarbons, is commonly or commercially known as naphtha, and is used to produce gasoline.

Neat renewable fuel is a renewable fuel to which 1% or less of gasoline (as defined in this section) or diesel fuel has been added.

Non-ester renewable diesel, also known as renewable diesel, means renewable fuel which is all of the following:

(1) A fuel which can be used in an engine designed to operate on conventional diesel fuel, or be heating oil or jet fuel.

(2) Not a mono-alkyl ester.

Nonforested land means land that is not forestland.

Nonroad vehicle has the meaning given in Section 216(11) of the Clean Air Act (42 U.S.C. 7550(11)).

Pastureland is land managed for the production of select indigenous or introduced forage plants for livestock grazing or hay production, and to prevent succession to other plant types.

Permitted capacity means 105% of the maximum permissible volume output of renewable fuel that is allowed under operating conditions specified in the most restrictive of all applicable preconstruction, construction and operating permits issued by regulatory authorities (including local, regional, state or a foreign equivalent of a state, and federal permits, or permits issued by foreign governmental agencies) that govern the construction and/or operation of the renewable fuel facility, based on an annual volume output on a calendar year basis. If the permit specifies maximum rated volume output on an hourly basis, then annual volume output is determined by multiplying the hourly output by 8,322 hours per year.

(1) For facilities that commenced construction prior to December 19, 2007, the permitted capacity is based on permits issued or revised no later than December 19, 2007.

(2) For facilities that commenced construction after December 19, 2007 and before January 1, 2010 that are fired with natural gas, biomass, or a combination thereof, the permitted capacity is based on permits issued or revised no later than December 31, 2009.

(3) For facilities other than those described in paragraphs (1) and (2) of this definition, permitted capacity is based on the most recent applicable permits.

Planted crops are all annual or perennial agricultural crops from existing agricultural land that may be used as feedstocks for renewable fuel, such as grains, oilseeds, sugarcane, switchgrass, prairie grass, duckweed, and other species (but not including algae species or planted trees), providing that they were intentionally applied by humans to the ground, a growth medium, a pond or tank, either by direct application as seed or plant, or through intentional natural seeding or vegetative propagation by mature plants introduced or left undisturbed for that purpose.

Planted trees are trees harvested from a tree plantation.

Pre-commercial thinnings are trees, including unhealthy or diseased trees, removed to reduce stocking to concentrate growth on more desirable, healthy trees, or other vegetative material that is removed to promote tree growth.

Raw starch hydrolysis means the process of hydrolyzing corn starch into simple sugars at low temperatures, generally not exceeding 100 °F (38 °C), using enzymes designed to be effective under these conditions.

Renewable biomass means each of the following (including any incidental, de minimis contaminants that are impractical to remove and are related to customary feedstock production and transport):

(1) Planted crops and crop residue harvested from existing agricultural land cleared or cultivated prior to December 19, 2007 and that was nonforested and either actively managed or fallow on December 19, 2007.

(2) Planted trees and tree residue from a tree plantation located on nonfederal land (including land belonging to an Indian tribe or an Indian individual that is held in trust by the U.S. or subject to a restriction against alienation imposed by the U.S.) that was cleared at any time prior to December 19, 2007 and actively managed on December 19, 2007.

(3) Animal waste material and animal byproducts.

(4) Slash and pre-commercial thinnings from non-federal forestland (including forestland belonging to an Indian tribe or an Indian individual, that are held in trust by the United States or subject to a restriction against alienation imposed by the United States) that is not ecologically sensitive forestland.

(5) Biomass (organic matter that is available on a renewable or recurring basis) obtained from the immediate vicinity of buildings and other areas regularly occupied by people, or of public infrastructure, in an area at risk of wildfire.

(6) Algae.

(7) Separated yard waste or food waste, including recycled cooking and trap grease, and materials described in § 80.1426(f)(5)(i).

Renewable electricity means electricity that meets the definition of renewable fuel.

Renewable fuel means a fuel which meets all of the requirements of paragraph (1) of this definition:

(1)(i) Fuel that is produced from renewable biomass.

(ii) Fuel that is used to replace or reduce the quantity of fossil fuel present in a transportation fuel, heating oil, or jet fuel.

(iii) Has lifecycle greenhouse gas emissions that are at least 20 percent less than baseline lifecycle greenhouse gas emissions, unless the fuel is exempt from this requirement pursuant to § 80.1403.

(2) Ethanol covered by this definition shall be denatured as required and defined in 27 CFR parts 19 through 21. Any volume of denaturant added to the undenatured ethanol by a producer or importer in excess of 2 volume percent shall not be included in the volume of ethanol for purposes of determining compliance with the requirements under this subpart.

Renewable gasoline means renewable fuel made from renewable biomass that is composed of only hydrocarbons and which meets the definition of gasoline in § 80.2(c).

Renewable gasoline blendstock means a blendstock made from renewable biomass that is composed of only hydrocarbons and which meets the definition of gasoline blendstock in § 80.2(s).

Renewable Identification Number (RIN), is a unique number generated to represent a volume of renewable fuel pursuant to §§ 80.1425 and 80.1426.

(1) *Gallon-RIN* is a RIN that represents an individual gallon of renewable fuel used for compliance purposes pursuant to § 80.1427 to satisfy a renewable volume obligation.

(2) *Batch-RIN* is a RIN that represents multiple gallon-RINs.

Slash is the residue, including treetops, branches, and bark, left on the ground after logging or accumulating as a result of a storm, fire, delimbing, or other similar disturbance.

Small refinery, for this subpart only, means a refinery for which the average aggregate daily crude oil throughput for calendar year 2006 (as determined by dividing the aggregate throughput for the calendar year by the number of days in the calendar year) does not exceed 75,000 barrels.

Transportation fuel means fuel for use in motor vehicles, motor vehicle engines, nonroad vehicles, or nonroad engines (except fuel for use in ocean-going vessels).

Tree plantation is a stand of no less than 1 acre composed primarily of trees established by hand- or machine-planting of a seed or sapling, or by coppice growth from the stump or root of a tree that was hand- or machine-planted. Tree plantations must have been cleared prior to December 19, 2007 and must have been actively managed on December 19, 2007, as evidenced by records which must be traceable to the land in question, which must include:

(1) Sales records for planted trees or tree residue together with other written documentation connecting the land in question to these purchases;

(2) Purchasing records for seeds, seedlings, or other nursery stock together with other written documentation connecting the land in question to these purchases;

(3) A written management plan for silvicultural purposes;

(4) Documentation of participation in a silvicultural program sponsored by a Federal, state or local government agency;

(5) Documentation of land management in accordance with an agricultural or silvicultural product certification program;

(6) An agreement for land management consultation with a professional forester that identifies the land in question; or

(7) Evidence of the existence and ongoing maintenance of a road system or other physical infrastructure designed and maintained for logging use, together with one of the above-mentioned documents.

Tree residue is slash and any woody residue generated during the processing of planted trees from tree plantations for use in lumber, paper, furniture or other applications, provided that such woody residue is not mixed

with similar residue from trees that do not originate in tree plantations.

[75 FR 14863, Mar. 26, 2010, as amended at 75 FR 26035, May 10, 2010, and 75 FR 37733, June 30, 2010; 75 FR 79976, Dec. 21, 2010; 77 FR 1354, Jan. 9, 2012; 78 FR 14215, Mar. 5, 2013]

§ 80.1402 [Reserved]

§ 80.1403 Which fuels are not subject to the 20% GHG thresholds?

(a) For purposes of this section, the following definitions apply:

(1) *Commence construction*, as applied to facilities that produce renewable fuel, means that:

(i) The owner or operator has all necessary preconstruction approvals or permits (as defined at 40 CFR 52.21(b)(10)), and has satisfied either of the following:

(A) Begun, or caused to begin, a continuous program of actual construction on-site (as defined in 40 CFR 52.21(b)(11)).

(B) Entered into binding agreements or contractual obligations, which cannot be cancelled or modified without substantial loss to the owner or operator, to undertake a program of actual construction of the facility.

(ii) For multi-phased projects, the commencement of construction of one phase does not constitute commencement of construction of any later phase, unless each phase is mutually dependent for physical and chemical reasons only.

(2) [Reserved]

(b) The lifecycle greenhouse gas emissions from renewable fuels must be at least 20 percent less than baseline lifecycle greenhouse gas emissions, with the exception of the baseline volumes of renewable fuel produced from facilities described in paragraphs (c) and (d) of this section.

(c) The baseline volume of renewable fuel that is produced from facilities and any expansions, all of which commenced construction on or before December 19, 2007, shall not be subject to the requirement that lifecycle greenhouse gas emissions be at least 20 percent less than baseline lifecycle greenhouse gas emissions if the owner or operator:

(1) Did not discontinue construction for a period of 18 months after commencement of construction; and

(2) Completed construction by December 19, 2010.

(d) The baseline volume of ethanol that is produced from facilities and any expansions all of which commenced construction after December 19, 2007 and on or before December 31, 2009, shall not be subject to the requirement that lifecycle greenhouse gas emissions be at least 20 percent less than baseline lifecycle greenhouse gas emissions if such facilities are fired with natural gas, biomass, or a combination thereof at all times the facility operated between December 19, 2007 and December 31, 2009 and if:

(1) The owner or operator did not discontinue construction for a period of 18 months after commencement of construction;

(2) The owner or operator completed construction within 36 months of commencement of construction; and

(3) The baseline volume continues to be produced through processes fired with natural gas, biomass, or any combination thereof.

(e) The annual volume of renewable fuel during a calendar year from facilities described in paragraphs (c) and (d) of this section that exceeds the baseline volume shall be subject to the requirement that lifecycle greenhouse gas emissions be at least 20 percent less than baseline lifecycle greenhouse gas emissions.

(f) If there are any changes in the mix of renewable fuels produced by those facilities described in paragraph (d) of this section, only the ethanol volume (to the extent it is less than or equal to baseline volume) will not be subject to the requirement that lifecycle greenhouse gas emissions be at least 20 percent less than baseline lifecycle greenhouse gas emissions. Any party that changes the fuel mix must update their registration as specified in § 80.1450(d).

[75 FR 14863, Mar. 26, 2010, as amended at 75 FR 26036, May 10, 2010; 75 FR 37733, June 30, 2010; 75 FR 79976, Dec. 21, 2010]

§ 80.1404 [Reserved]

§ 80.1405 What are the Renewable Fuel Standards?

(a) (1) *Renewable Fuel Standards for 2010.*

(i) The value of the cellulosic biofuel standard for 2010 shall be 0.004 percent.

(ii) The value of the biomass-based diesel standard for 2010 shall be 1.10 percent.

(iii) The value of the advanced biofuel standard for 2010 shall be 0.61 percent.

(iv) The value of the renewable fuel standard for 2010 shall be 8.25 percent.

(2) *Renewable Fuel Standards for 2011.*

(i) The value of the cellulosic biofuel standard for 2011 shall be 0.003 percent.

(ii) The value of the biomass-based diesel standard for 2011 shall be 0.69 percent.

(iii) The value of the advanced biofuel standard for 2011 shall be 0.78 percent.

(iv) The value of the renewable fuel standard for 2011 shall be 8.01 percent.

(3) *Renewable Fuel Standards for 2012.*

(i) The value of the cellulosic biofuel standard for 2012 shall be 0.006 percent.

(ii) The value of the biomass-based diesel standard for 2012 shall be 0.91 percent.

(iii) The value of the advanced biofuel standard for 2012 shall be 1.21 percent.

(iv) The value of the renewable fuel standard for 2012 shall be 9.23 percent.

(b) EPA will calculate the value of the annual standards and publish these values in the FEDERAL REGISTER by November 30 of the year preceding the compliance period.

(c) EPA will calculate the annual renewable fuel percentage standards using the following equations:

$$Std_{CB,i} = 100 * \frac{RFV_{CB,i}}{(G_i - RG_i) + (GS_i - RGS_i) - GE_i + (D_i - RD_i) + (DS_i - RDS_i) - DE_i}$$

$$Std_{BBD,i} = 100 * \frac{RFV_{BBD,i} \times 1.5}{(G_i - RG_i) + (GS_i - RGS_i) - GE_i + (D_i - RD_i) + (DS_i - RDS_i) - DE_i}$$

$$Std_{AB,i} = 100 * \frac{RFV_{AB,i}}{(G_i - RG_i) + (GS_i - RGS_i) - GE_i + (D_i - RD_i) + (DS_i - RDS_i) - DE_i}$$

$$Std_{RF,i} = 100 * \frac{RFV_{RF,i}}{(G_i - RG_i) + (GS_i - RGS_i) - GE_i + (D_i - RD_i) + (DS_i - RDS_i) - DE_i}$$

Where:

$Std_{CB,i}$ = The cellulosic biofuel standard for year i, in percent.

$Std_{BBD,i}$= The biomass-based diesel standard for year i, in percent.

$Std_{AB,i}$= The advanced biofuel standard for year i, in percent.

$Std_{RF,i}$= The renewable fuel standard for year i, in percent.

$RFV_{CB,i}$= Annual volume of cellulosic biofuel required by 42 U.S.C. 7545(o)(2)(B) for year i, or volume as adjusted pursuant to 42 U.S.C. 7545(o)(7)(D), in gallons.

$RFV_{BBD,i}$= Annual volume of biomass-based diesel required by 42 U.S.C. 7545 (o)(2)(B) for year i, in gallons.

$RFV_{AB,i}$= Annual volume of advanced biofuel required by 42 U.S.C. 7545(o)(2)(B) for year i, in gallons.

$RFV_{RF,i}$= Annual volume of renewable fuel required by 42 U.S.C. 7545(o)(2)(B) for year i, in gallons.

G_i= Amount of gasoline projected to be used in the 48 contiguous states and Hawaii, in year i, in gallons.

D_i= Amount of diesel projected to be used in the 48 contiguous states and Hawaii, in year i, in gallons.

RG_i= Amount of renewable fuel blended into gasoline that is projected to be consumed in the 48 contiguous states and Hawaii, in year i, in gallons.

RD_i= Amount of renewable fuel blended into diesel that is projected to be consumed in the 48 contiguous states and Hawaii, in year i, in gallons.

GS_i= Amount of gasoline projected to be used in Alaska or a U.S. territory, in year i, if the state or territory has opted-in or opts-in, in gallons.

RGS_i= Amount of renewable fuel blended into gasoline that is projected to be consumed in Alaska or a U.S. territory, in year i, if the state or territory opts-in, in gallons.

DS_i= Amount of diesel projected to be used in Alaska or a U.S. territory, in year i, if the state or territory has opted-in or opts-in, in gallons.

RDS_i= Amount of renewable fuel blended into diesel that is projected to be consumed in Alaska or a U.S. territory, in year i, if the state or territory opts-in, in gallons.

GE_i= The amount of gasoline projected to be produced by exempt small refineries and small refiners, in year i, in gallons in any year they are exempt per §§ 80.1441 and 80.1442.

DE_i= The amount of diesel fuel projected to be produced by exempt small refineries and small refiners in year i, in gallons, in any year they are exempt per §§ 80.1441 and 80.1442.

(d) (1) The 2010 price for cellulosic biofuel waiver credits is $1.56 per waiver credit.

(2) The 2011 price for cellulosic biofuel waiver credits is $1.13 per waiver credit.

(3) The 2012 price for cellulosic biofuel waiver credits is $0.78 per waiver credit.

[77 FR 1354, Jan. 9, 2012]

§ 80.1406 Who is an obligated party under the RFS program?

(a)(1) An *obligated party* is any refiner that produces gasoline or diesel fuel within the 48 contiguous states or Hawaii, or any importer that imports gasoline or diesel fuel into the 48 contiguous states or Hawaii during a compliance period. A party that simply blends renewable fuel into gasoline or diesel fuel, as defined in § 80.1407(c) or (e), is not an obligated party.

(2) If the Administrator approves a petition of Alaska or a United States territory to opt-in to the renewable fuel program under the provisions in § 80.1443, then ''obligated party'' shall also include any refiner that produces gasoline or diesel fuel within that state or territory, or any importer that imports gasoline or diesel fuel into that state or territory.

(b) For each compliance period starting with 2010, an obligated party is required to demonstrate, pursuant to § 80.1427, that it has satisfied the Renewable Volume Obligations for that compliance period, as specified in § 80.1407(a).

(c) *Aggregation of facilities*—(1) Except as provided in paragraphs (c)(2), (d) and (e) of this section, an obligated party may comply with the requirements of paragraph (b) of this section in the aggregate for all of the refineries that it operates, or for each refinery individually.

(2) An obligated party that carries a deficit into year i+1 must use the same approach to aggregation of facilities in year i+1 as it did in year i.

(d) An obligated party must comply with the requirements of paragraph (b) of this section for all of its imported gasoline or diesel fuel in the aggregate.

(e) An obligated party that is both a refiner and importer must comply with the requirements of paragraph (b) of this section for its imported gasoline or diesel fuel separately from gasoline or diesel fuel produced by its domestic refinery or refineries.

(f) Where a refinery or import facility is jointly owned by two or more

parties, the requirements of paragraph (b) of this section may be met by one of the joint owners for all of the gasoline or diesel fuel produced/imported at the facility, or each party may meet the requirements of paragraph (b) of this section for the portion of the gasoline or diesel fuel that it produces or imports, as long as all of the gasoline or diesel fuel produced/imported at the facility is accounted for in determining the Renewable Volume Obligations under § 80.1407. In either case, all joint owners are subject to the liability provisions of § 80.1461(d).

(g) The requirements in paragraph (b) of this section apply to the following compliance periods: Beginning in 2010, and every year thereafter, the compliance period is January 1 through December 31.

[75 FR 14863, Mar. 26, 2010, as amended at 75 FR 26037, May 10, 2010]

§ 80.1407 How are the Renewable Volume Obligations calculated?

(a) The Renewable Volume Obligations for an obligated party are determined according to the following formulas:

(1) *Cellulosic biofuel.*

$$RVO_{CB,i} = (RFStd_{CB,i} * (GV_i + DV_i)) + D_{CB,i-1}$$

Where:

$RVO_{CB,i}$ = The Renewable Volume Obligation for cellulosic biofuel for an obligated party for calendar year i, in gallons.

$RFStd_{CB,i}$ = The standard for cellulosic biofuel for calendar year i, determined by EPA pursuant to § 80.1405, in percent.

GV_i = The non-renewable gasoline volume, determined in accordance with paragraphs (b), (c), and (f) of this section, which is produced in or imported into the 48 contiguous states or Hawaii by an obligated party in calendar year i, in gallons.

DV_i = The non-renewable diesel volume, determined in accordance with paragraphs (d), (e), and (f) of this section, produced in or imported into the 48 contiguous states or Hawaii by an obligated party in calendar year i, in gallons.

$D_{CB,i-1}$ = Deficit carryover from the previous year for cellulosic biofuel, in gallons.

(2) *Biomass-based diesel.*

$$RVO_{BBD,i} = (RFStd_{BBD,i} * (GV_i + DV_i)) + D_{BBD,i-1}$$

Where:

$RVO_{BBD,i}$ = The Renewable Volume Obligation for biomass-based diesel for an obligated party for calendar year i, in gallons.

$RFStd_{BBD,i}$ = The standard for biomass-based diesel for calendar year i, determined by EPA pursuant to § 80.1405, in percent.

GV_i = The non-renewable gasoline volume, determined in accordance with paragraphs (b), (c), and (f) of this section, which is produced in or imported into the 48 contiguous states or Hawaii by an obligated party in calendar year i, in gallons.

DV_i = The non-renewable diesel volume, determined in accordance with paragraphs (d), (e), and (f) of this section, produced in or imported into the 48 contiguous states or Hawaii by an obligated party in calendar year i, in gallons.

$D_{BBD,i-1}$ = Deficit carryover from the previous year for biomass-based diesel, in gallons.

(3) *Advanced biofuel.*

$$RVO_{AB,i} = (RFStd_{AB,i} * (GV_i + DV_i)) + D_{AB,i-1}$$

Where:

$RVO_{AB,i}$ = The Renewable Volume Obligation for advanced biofuel for an obligated party for calendar year i, in gallons.

$RFStd_{AB,i}$ = The standard for advanced biofuel for calendar year i, determined by EPA pursuant to § 80.1405, in percent.

GV_i = The non-renewable gasoline volume, determined in accordance with paragraphs (b), (c), and (f) of this section, which is produced in or imported into the 48 contiguous states or Hawaii by an obligated party in calendar year i, in gallons.

DV_i = The non-renewable diesel volume, determined in accordance with paragraphs (d), (e), and (f) of this section, produced in or imported into the 48 contiguous states or Hawaii by an obligated party in calendar year i, in gallons.

$D_{AB,i-1}$ = Deficit carryover from the previous year for advanced biofuel, in gallons.

(4) *Renewable fuel.*

$$RVO_{RF,i} = (RFStd_{RF,i} * (GV_i + DV_i)) + D_{RF,i-1}$$

Where:

$RVO_{RF,i}$ = The Renewable Volume Obligation for renewable fuel for an obligated party for calendar year i, in gallons.

$RFStd_{RF,i}$ = The standard for renewable fuel for calendar year i, determined by EPA pursuant to § 80.1405, in percent.

GV_i = The non-renewable gasoline volume, determined in accordance with paragraphs (b), (c), and (f) of this section, which is produced in or imported into the

48 contiguous states or Hawaii by an obligated party in calendar year i, in gallons.

DV_i = The non-renewable diesel volume, determined in accordance with paragraphs (d), (e), and (f) of this section, produced in or imported into the 48 contiguous states or Hawaii by an obligated party in calendar year i, in gallons.

$D_{RF,i-1}$ = Deficit carryover from the previous year for renewable fuel, in gallons.

(b) The non-renewable gasoline volume, GV_i, for an obligated party for a given year as specified in paragraph (a) of this section is calculated as follows:

$$GV_i = \sum_{x=1}^{n} G_x - \sum_{y=1}^{m} RBG_y$$

Where:

x = Individual batch of gasoline produced or imported in calendar year i.

n = Total number of batches of gasoline produced or imported in calendar year i.

G_X = Volume of batch x of gasoline produced or imported, as defined in paragraph (c) of this section, in gallons.

y = Individual batch of renewable fuel blended into gasoline in calendar year i.

m = Total number of batches of renewable fuel blended into gasoline in calendar year i.

RBG_y = Volume of batch y of renewable fuel blended into gasoline, in gallons.

(c) Except as specified in paragraph (f) of this section, all of the following products that are produced or imported during a compliance period, collectively called ''gasoline'' for the purposes of this section (unless otherwise specified), are to be included (but not double-counted) in the volume used to calculate a party's Renewable Volume Obligations under paragraph (a) of this section, except as provided in paragraph (f) of this section:

(1) Reformulated gasoline, whether or not renewable fuel is later added to it.

(2) Conventional gasoline, whether or not renewable fuel is later added to it.

(3) Reformulated gasoline blendstock that becomes finished reformulated gasoline upon the addition of oxygenate (RBOB).

(4) Conventional gasoline blendstock that becomes finished conventional gasoline upon the addition of oxygenate (CBOB).

(5) Blendstock (including butane and gasoline treated as blendstock (GTAB)) that has been combined with other blendstock and/or finished gasoline to produce gasoline.

(6) Any gasoline, or any unfinished gasoline that becomes finished gasoline upon the addition of oxygenate, that is produced or imported to comply with a state or local fuels program.

(d) The diesel non-renewable volume, DV_i, for an obligated party for a given year as specified in paragraph (a) of this section is calculated as follows:

$$DV_i = \sum_{x=1}^{n} D_x - \sum_{y=1}^{m} RBD_y$$

Where:

x = Individual batch of diesel produced or imported in calendar year i.

n = Total number of batches of diesel produced or imported in calendar year i.

D_X = Volume of batch x of diesel produced or imported, as defined in paragraph (e) of this section, in gallons.

y = Individual batch of renewable fuel blended into diesel in calendar year i.

m = Total number of batches of renewable fuel blended into diesel in calendar year i.

RBD_y = Volume of batch y of renewable fuel blended into diesel, in gallons.

(e) Except as specified in paragraph (f) of this section, all products meeting the definition of *MVNRLM diesel fuel* at § 80.2(qqq) that are produced or imported during a compliance period, collectively called ''diesel fuel'' for the purposes of this section (unless otherwise specified), are to be included (but not double-counted) in the volume used to calculate a party's Renewable Volume Obligations under paragraph (a) of this section.

(f) The following products are not included in the volume of gasoline or diesel fuel produced or imported used to

calculate a party's Renewable Volume Obligations according to paragraph (a) of this section:

(1) Any renewable fuel as defined in § 80.1401.

(2) Blendstock that has not been combined with other blendstock, finished gasoline, or diesel to produce gasoline or diesel.

(3) Gasoline or diesel fuel produced or imported for use in Alaska, the Commonwealth of Puerto Rico, the U.S. Virgin Islands, Guam, American Samoa, and the Commonwealth of the Northern Marianas, unless the area has opted into the RFS program under § 80.1443.

(4) Gasoline or diesel fuel produced by a small refinery that has an exemption under § 80.1441 or an approved small refiner that has an exemption under § 80.1442.

(5) Gasoline or diesel fuel exported for use outside the 48 United States and Hawaii, and gasoline or diesel fuel exported for use outside Alaska, the Commonwealth of Puerto Rico, the U.S. Virgin Islands, Guam, American Samoa, and the Commonwealth of the Northern Marianas, if the area has opted into the RFS program under § 80.1443.

(6) For blenders, the volume of finished gasoline, finished diesel fuel, RBOB, or CBOB to which a blender adds blendstocks.

(7) The gasoline or diesel fuel portion of transmix produced by a transmix processor, or the transmix blended into gasoline or diesel fuel by a transmix blender, under § 80.84.

(8) Any gasoline or diesel fuel that is not transportation fuel.

§§ 80.1408–80.1414 [Reserved]

§ 80.1415 How are equivalence values assigned to renewable fuel?

(a)(1) Each gallon of a renewable fuel, or gallon equivalent pursuant to paragraph (b)(5) or (b)(6) of this section, shall be assigned an equivalence value by the producer or importer pursuant to paragraph (b) or (c) of this section.

(2) The equivalence value is a number that is used to determine how many gallon-RINs can be generated for a gallon of renewable fuel according to § 80.1426.

(b) Equivalence values shall be assigned for certain renewable fuels as follows:

(1) Ethanol which is denatured shall have an equivalence value of 1.0.

(2) Biodiesel (mono-alkyl ester) shall have an equivalence value of 1.5.

(3) Butanol shall have an equivalence value of 1.3.

(4) Non-ester renewable diesel with a lower heating value of at least 123,500 Btu/gal shall have an equivalence value of 1.7.

(5) 77,000 Btu (lower heating value) of biogas shall represent one gallon of renewable fuel with an equivalence value of 1.0.

(6) 22.6 kW-hr of electricity shall represent one gallon of renewable fuel with an equivalence value of 1.0.

(7) For all other renewable fuels, a producer or importer shall submit an application to the Agency for an equivalence value following the provisions of paragraph (c) of this section. A producer or importer may also submit an application for an alternative equivalence value pursuant to paragraph (c) if the renewable fuel is listed in this paragraph (b), but the producer or importer has reason to believe that a different equivalence value than that listed in this paragraph (b) is warranted.

(c) *Calculation of new equivalence values.*

(1) The equivalence value for renewable fuels described in paragraph (b)(7) of this section shall be calculated using the following formula:

$$EV = (R/0.972) * (EC/77{,}000)$$

Where:

EV = Equivalence Value for the renewable fuel, rounded to the nearest tenth.

R = Renewable content of the renewable fuel. This is a measure of the portion of a renewable fuel that came from renewable biomass, expressed as a fraction, on an energy basis.

EC = Energy content of the renewable fuel, in Btu per gallon (lower heating value).

(2) The application for an equivalence value shall include a technical justification that includes all the following:

(i) A calculation for the requested equivalence value according to the

equation in paragraph (c)(1) of this section, including supporting documentation for the value of EC used in the calculation such as a certificate of analysis from a laboratory that verifies the lower heating value in Btu per gallon of the renewable fuel produced.

(ii) For each feedstock, component, or additive that is used to make the renewable fuel, provide a description, the percent input, and identify whether or not it is renewable biomass or is derived from renewable biomass.

(iii) For each feedstock that also qualifies as a renewable fuel, state whether or not RINs have been previously generated for such feedstock.

(iv) A description of the renewable fuel and the production process, including a block diagram that shows all inputs and outputs at each step of the production process with a sample quantity of all inputs and outputs for one batch of renewable fuel produced.

(3) The Agency will review the technical justification and assign an appropriate equivalence value to the renewable fuel based on the procedure in this paragraph (c).

(4) Applications for equivalence values must be sent to one of the following addresses:

(i) *For U.S. Mail:* U.S. EPA, Attn: RFS2 Program Equivalence Value Application, 6406J, 1200 Pennsylvania Avenue, NW., Washington, DC 20460.

(ii) *For overnight or courier services:* U.S. EPA, Attn: RFS2 Program Equivalence Value Application, 6406J, 1310 L Street, NW., 6th floor, Washington, DC 20005. (202) 343–9038.

(5) All applications required under this section shall be submitted on forms and following procedures prescribed by the Administrator.

[75 FR 14863, Mar. 26, 2010, as amended at 75 FR 26037, May 10, 2010; 77 FR 1355, Jan. 9, 2012]

§ 80.1416 Petition process for evaluation of new renewable fuels pathways.

(a) Pursuant to this section, a party may petition EPA to assign a D code for their renewable fuel if any of the following apply:

(1) The renewable fuel pathway has not been evaluated by EPA to determine if it qualifies for a D code pursuant to § 80.1426(f).

(2) The renewable fuel pathway has been determined by EPA not to qualify for a D code pursuant to § 80.1426(f) and the party can document significant differences between their fuel production processes and the fuel production processes already considered by EPA.

(3) The renewable fuel pathway has been determined to qualify for a certain D code pursuant to § 80.1426(f) and the party can document significant differences between their fuel production processes and the fuel production processes already considered by EPA that may qualify their fuel pathway for a different D code.

(b)(1) Any petition under paragraph (a) of this section shall include all the following:

(i) The information specified under § 80.76.

(ii) A technical justification that includes a description of the renewable fuel, feedstock(s) used to make it, and the production process. The justification must include process modeling flow charts.

(iii) A mass balance for the pathway, including feedstocks, fuels produced, co-products, and waste materials production.

(iv) Information on co-products, including their expected use and market value.

(v) An energy balance for the pathway, including a list of any energy and process heat inputs and outputs used in the pathway, including such sources produced off site or by another entity.

(vi) Any other relevant information, including information pertaining to energy saving technologies or other process improvements.

(vii) The Administrator may ask for additional information to complete the lifecycle greenhouse gas assessment of the new fuel or pathway.

(2) For those companies who use a feedstock not previously evaluated by EPA under this subpart, the petition must include all the following in addition to the requirements in paragraph (b)(1) of this section:

(i) Type of feedstock and description of how it meets the definition of renewable biomass.

(ii) Market value of the feedstock.

(iii) List of other uses for the feedstock.

(iv) List of chemical inputs needed to produce the renewable biomass source of the feedstock and prepare the renewable biomass for processing into feedstock.

(v) Identify energy needed to obtain the feedstock and deliver it to the facility. If applicable, identify energy needed to plant and harvest the renewable biomass source of the feedstock and modify the source to create the feedstock.

(vi) Current and projected quantities of the feedstock that will be used to produce the fuel, including information on current and projected yields for feedstocks that are harvested or collected.

(vii) The Administrator may ask for additional information to complete the lifecycle Greenhouse Gas assessment of the new fuel or pathway.

(c)(1) A company may only submit one petition per pathway. If EPA determines the petition to be incomplete, then the company may resubmit.

(2) The petition must be signed and certified as meeting all the applicable requirements of this subpart by the responsible corporate officer of the applicant company.

(3) If EPA determines that the petition is incomplete then EPA will notify the applicant in writing that the petition is incomplete and will not be reviewed further. However, an amended petition that corrects the omission may be re-submitted for EPA review.

(4) If the fuel or pathway described in the petition does not meet the definitions in § 80.1401 of renewable fuel, advanced biofuel, cellulosic biofuel, or biomass-based diesel, then EPA will notify the applicant in writing that the petition is denied and will not be reviewed further.

(d) A D code must be approved prior to the generation of RINs for the fuel in question.

(e) The petition under this section shall be submitted on forms and following procedures as prescribed by EPA.

[75 FR 26037, May 10, 2010]

§§ 80.1417–80.1424 [Reserved]

§ 80.1425 Renewable Identification Numbers (RINs).

RINs generated on or after July 1, 2010 shall not be generated as a 38-digit code, but shall be identified by the information specified in paragraphs (a) through (i) of this section and introduced into EMTS as data elements during the generation of RINs pursuant to § 80.1452(b). For RINs generated prior to July 1, 2010, each RIN is a 38-digit code of the following form:

KYYYYCCCCFFFFFBBBBBRRD

SSSSSSSSSEEEEEEEE

(a) K is a number identifying the type of RIN as follows:

(1) K has the value of 1 when the RIN is assigned to a volume of renewable fuel pursuant to § 80.1426(e) and § 80.1428(a).

(2) K has the value of 2 when the RIN has been separated from a volume of renewable fuel pursuant to § 80.1429.

(b) YYYY is the calendar year in which the RIN was generated.

(c) CCCC is the registration number assigned, according to § 80.1450, to the producer or importer of the batch of renewable fuel.

(d) FFFFF is the registration number assigned, according to § 80.1450, to the facility at which the batch of renewable fuel was produced or imported.

(e) BBBBB is a serial number assigned to the batch which is chosen by the producer or importer of the batch such that no two batches have the same value in a given calendar year.

(f) RR is a number representing 10 times the equivalence value of the renewable fuel as specified in § 80.1415.

(g) D is a number determined according to § 80.1426(f) and identifying the type of renewable fuel, as follows:

(1) D has the value of 3 to denote fuel categorized as cellulosic biofuel.

(2) D has the value of 4 to denote fuel categorized as biomass-based diesel.

(3) D has the value of 5 to denote fuel categorized as advanced biofuel.

(4) D has the value of 6 to denote fuel categorized as renewable fuel.

(5) D has the value of 7 to denote fuel categorized as cellulosic diesel.

(h) SSSSSSSS is a number representing the first gallon-RIN associated with a batch of renewable fuel.

(i) EEEEEEEE is a number representing the last gallon-RIN associated with a volume of renewable fuel.

[75 FR 14863, Mar. 26, 2010, as amended at 75 FR 79977, Dec. 21, 2010]

§ 80.1426 How are RINs generated and assigned to batches of renewable fuel by renewable fuel producers or importers?

(a) *General requirements.* (1) To the extent permitted under paragraphs (b) and (c) of this section, producers and importers of renewable fuel must generate RINs to represent that fuel if the fuel:

(i) Qualifies for a D code pursuant to § 80.1426(f), or EPA has approved a petition for use of a D code pursuant to § 80.1416; and

(ii) Is demonstrated to be produced from renewable biomass pursuant to the reporting requirements of § 80.1451 and the recordkeeping requirements of § 80.1454; and

(A) Feedstocks meeting the requirements of renewable biomass through the aggregate compliance provision at § 80.1454(g) are deemed to be renewable biomass.

(B) [Reserved]

(iii) Was produced in compliance with the registration requirements of § 80.1450, the reporting requirements of § 80.1451, the recordkeeping requirements of § 80.1454, and all other applicable regulations of this subpart M.

(2) To generate RINs for imported renewable fuel, including any renewable fuel contained in imported transportation fuel, heating oil, or jet fuel, importers must obtain information from a foreign producer that is registered pursuant to § 80.1450 sufficient to make the appropriate determination regarding the applicable D code and compliance with the renewable biomass definition for each imported batch for which RINs are generated.

(3) A party generating a RIN shall specify the appropriate numerical values for each component of the RIN in accordance with the provisions of § 80.1425(a) and paragraph (f) of this section.

(b) *Regional applicability.* (1) Except as provided in paragraph (c) of this section, a RIN must be generated by a renewable fuel producer or importer for a batch of renewable fuel that satisfies the requirements of paragraph (a)(1) of this section if it is produced or imported for use as transportation fuel, heating oil, or jet fuel in the 48 contiguous states or Hawaii.

(2) If the Administrator approves a petition of Alaska or a United States territory to opt-in to the renewable fuel program under the provisions in § 80.1443, then the requirements of paragraph (b)(1) of this section shall also apply to renewable fuel produced or imported for use as transportation fuel, heating oil, or jet fuel in that state or territory beginning in the next calendar year.

(c) *Cases in which RINs are not generated.* (1) Fuel producers and importers may not generate RINs for fuel that is not designated or intended for use as transportation fuel, heating oil, or jet fuel.

(2) *Small producer/importer threshold.* Pursuant to § 80.1455(a) and (b), renewable fuel producers that produce less than 10,000 gallons a year of renewable fuel, and importers that import less than 10,000 gallons a year of renewable fuel, are not required to generate and assign RINs to batches of renewable fuel that satisfy the requirements of paragraph (a)(1) of this section that they produce or import.

(3) *Temporary new producer threshold.* Pursuant to § 80.1455(c) and (d), new renewable fuel producers that produce less than 125,000 gallons of renewable fuel a year are not required to generate and assign RINs to batches of renewable fuel to satisfy the requirements of paragraph (a)(1) of this section.

(i) The provisions of this paragraph (c)(3) apply only to new facilities, for a maximum of three years beginning with the calendar year in which the production facility produces its first gallon of renewable fuel.

(ii) [Reserved]

(4) Importers shall not generate RINs for renewable fuel imported from a foreign renewable fuel producer, or for renewable fuel made with ethanol produced by a foreign ethanol producer,

unless the foreign renewable fuel producer or foreign ethanol producer is registered with EPA as required in § 80.1450.

(5) Importers shall not generate RINs for renewable fuel that has already been assigned RINs by a registered foreign producer.

(6) A party is prohibited from generating RINs for a volume of fuel that it produces if:

(i) The fuel does not meet the requirements of paragraph (a)(1) of this section; or

(ii) The fuel has been produced from a chemical conversion process that uses another renewable fuel as a feedstock, the renewable fuel used as a feedstock was produced by another party, and RINs were received with the renewable fuel.

(A) Parties who produce renewable fuel made from a feedstock which itself was a renewable fuel received with RINs, shall assign the original RINs to the new renewable fuel.

(B) [Reserved]

(d)(1) *Definition of batch.* For the purposes of this section and § 80.1425, a ''batch of renewable fuel'' is a volume of renewable fuel that has been assigned a unique identifier within a calendar year by the producer or importer of the renewable fuel in accordance with the provisions of this section and § 80.1425.

(i) The number of gallon-RINs generated for a batch of renewable fuel may not exceed 99,999,999.

(ii) A batch of renewable fuel cannot represent renewable fuel produced or imported in excess of one calendar month.

(2) Multiple gallon-RINs generated to represent a given volume of renewable fuel can be represented by a single batch-RIN through the appropriate designation of the RIN volume codes SSSSSSSS and EEEEEEEE.

(i) The value of SSSSSSSS in the batch-RIN shall be 00000001 to represent the first gallon-RIN associated with the volume of renewable fuel.

(ii) The value of EEEEEEEE in the batch-RIN shall represent the last gallon-RIN associated with the volume of renewable fuel, based on the RIN volume V_{RIN} determined pursuant to paragraph (f) of this section.

(iii) Under § 80.1452, RIN volumes will be managed by EMTS. RIN codes SSSSSSSS and EEEEEEEE do not have a role in EMTS.

(e) *Assignment of RINs to batches.* (1) Except as provided in paragraph (g) of this section for delayed RINs, the producer or importer of renewable fuel must assign all RINs generated to volumes of renewable fuel.

(2) A RIN is assigned to a volume of renewable fuel when ownership of the RIN is transferred along with the transfer of ownership of the volume of renewable fuel, pursuant to § 80.1428(a).

(3) All assigned RINs shall have a K code value of 1.

(f) *Generation of RINs*—(1) *Applicable pathways.* D codes shall be used in RINs generated by producers or importers of renewable fuel according to the pathways listed in Table 1 to this section, paragraph (f)(6) of this section, or as approved by the Administrator. In choosing an appropriate D code, producers and importers may disregard any incidental, de minimis feedstock contaminants that are impractical to remove and are related to customary feedstock production and transport. Tables 1 and 2 to this section do not apply to, and impose no requirements with respect to, volumes of fuel for which RINs are generated pursuant to paragraph (f)(6) of this section.

TABLE 1 TO § 80.1426—APPLICABLE D CODES FOR EACH FUEL PATHWAY FOR USE IN GENERATING RINS

	Fuel type	Feedstock	Production process requirements	D–Code
A	Ethanol	Corn starch	All of the following: Dry mill process, using natural gas, biomass, or biogas for process energy and at least two advanced technologies from Table 2 to this section.	6

TABLE 1 TO § 80.1426—APPLICABLE D CODES FOR EACH FUEL PATHWAY FOR USE IN GENERATING RINS—Continued

	Fuel type	Feedstock	Production process requirements	D–Code
B	Ethanol	Corn starch	All of the following: Dry mill process, using natural gas, biomass, or biogas for process energy and at least one of the advanced technologies from Table 2 to this section plus drying no more than 65% of the distillers grains with solubles it markets annually.	6
C	Ethanol	Corn starch	All of the following: Dry mill process, using natural gas, biomass, or biogas for process energy and drying no more than 50% of the distillers grains with solubles it markets annually.	6
D	Ethanol	Corn starch	Wet mill process using biomass or biogas for process energy.	6
E	Ethanol	Starches from crop residue and annual covercrops.	Fermentation using natural gas, biomass, or biogas for process energy.	6
F	Biodiesel, renewable diesel, jet fuel and heating oil.	Soy bean oil; Oil from annual covercrops; Algal oil; Biogenic waste oils/fats/greases; Non-food grade corn oil *Camelina sativa* oil.	One of the following: Trans-Esterification Hydrotreating Excluding processes that co-process renewable biomass and petroleum.	4
G	Biodiesel, heating oil.	Canola/Rapeseed oil	Trans-Esterification using natural gas or biomass for process energy.	4
H	Biodiesel, renewable diesel, jet fuel and heating oil.	Soy bean oil; Oil from annual covercrops; Algal oil; Biogenic waste oils/fats/greases; Non-food grade corn oil *Camelina sativa* oil.	One of the following: Trans-Esterification Hydrotreating Includes only processes that co-process renewable biomass and petroleum.	5
I	Naphtha, LPG	*Camelina sativa* oil	Hydrotreating	5
J	Ethanol	Sugarcane	Fermentation	5
K	Ethanol	Cellulosic Biomass from crop residue, slash, pre-commercial thinnings and tree residue, annual covercrops, switchgrass, miscanthus, and energy cane; cellulosic components of separated yard waste; cellulosic components of separated food waste; and cellulosic components of separated MSW.	Any	3
L	Cellulosic diesel, jet fuel and heating oil.	Cellulosic Biomass from crop residue, slash, pre-commercial thinnings and tree residue, annual covercrops, switchgrass, miscanthus, and energy cane; cellulosic components of separated yard waste; cellulosic components of separated food waste; and cellulosic components of separated MSW.	Any	7
M	Renewable gasoline and renewable gasoline blendstock.	Cellulosic Biomass from crop residue, slash, pre-commercial thinnings, tree residue, annual cover crops; cellulosic components of separated yard waste; cellulosic components of separated food waste; and cellulosic components of separated MSW.	Catalytic Pyrolysis and Upgrading, Gasification and Upgrading, Thermo-Catalytic Hydrodeoxygenation and Upgrading, Direct Biological Conversion, Biological Conversion and Upgrading, all utilizing natural gas, biogas, and/or biomass as the only process energy sources Any process utilizing biogas and/or biomass as the only process energy sources.	3
N	Naphtha	Cellulosic biomass from switchgrass, miscanthus, and energy cane.	Gasification and upgrading	3
O	Butanol	Corn starch	Fermentation; dry mill using natural gas, biomass, or biogas for process energy.	6
P	Ethanol, renewable diesel, jet fuel, heating oil, and naphtha.	The non-cellulosic portions of separated food waste.	Any	5
Q	Biogas	Landfills, sewage waste treatment plants, manure digesters.	Any	5

TABLE 1 TO § 80.1426—APPLICABLE D CODES FOR EACH FUEL PATHWAY FOR USE IN GENERATING RINS—Continued

	Fuel type	Feedstock	Production process requirements	D–Code
R	Ethanol	Grain Sorghum	Dry mill process using biogas from landfills, waste treatment plants, and/or waste digesters, and/or natural gas, for process energy.	6
S	Ethanol	Grain Sorghum	Dry mill process, using only biogas from landfills, waste treatment plants, and/or waste digesters for process energy and for on-site production of all electricity used at the site other than up to 0.15 kWh of electricity from the grid per gallon of ethanol produced, calculated on a per batch basis.	5

TABLE 2 TO § 80.1426—ADVANCED TECHNOLOGIES

Corn oil fractionation that is applied to at least 90% of the corn used to produce ethanol on a calendar year basis.

Corn oil extraction that is applied to the whole stillage and/or derivatives of whole stillage and results in recovery of corn oil at an annual average rate equal to or greater than 1.33 pounds oil per bushel of corn processed into ethanol.

Membrane separation in which at least 90% of ethanol dehydration is carried out using a hydrophilic membrane on a calendar year basis.

Raw starch hydrolysis that is used for at least 90% of starch hydrolysis used to produce ethanol instead of hydrolysis using a traditional high heat cooking process, calculated on a calendar year basis.

Combined heat and power such that, on a calendar year basis, at least 90% of the thermal energy associated with ethanol production (including thermal energy produced at the facility and that which is derived from an off-site waste heat supplier), exclusive of any thermal energy used for the drying of distillers grains and solubles, is used to produce electricity prior to being used to meet the process heat requirements of the facility.

(2) *Renewable fuel that can be described by a single pathway.* (i) The number of gallon-RINs that shall be generated for a batch of renewable fuel by a producer or importer for renewable fuel that can be described by a single pathway shall be equal to a volume calculated according to the following formula:

$$V_{RIN} = EV * V_s$$

Where:

V_{RIN} = RIN volume, in gallons, for use in determining the number of gallon-RINs that shall be generated for the batch.

EV = Equivalence value for the batch of renewable fuel per § 80.1415.

V_s = Standardized volume of the batch of renewable fuel at 60 °F, in gallons, calculated in accordance with paragraph (f)(8) of this section.

(ii) The D code that shall be used in the RINs generated shall be the D code specified in Table 1 to this section, or a D code as approved by the Administrator, which corresponds to the pathway that describes the producer's operations.

(3) *Renewable fuel that can be described by two or more pathways.* (i) The D codes that shall be used in the RINs generated by a producer or importer whose renewable fuel can be described by two or more pathways shall be the D codes specified in Table 1 to this section, or D codes as approved by the Administrator, which correspond to the pathways that describe the renewable fuel throughout that calendar year.

(ii) If all the pathways describing the producer's operations have the same D code and each batch is of a single fuel type, then that D code shall be used in all the RINs generated and the number of gallon-RINs that shall be generated for a batch of renewable fuel shall be equal to a volume calculated according to the following formula:

$$V_{RIN} = EV * V_s$$

Where:

V_{RIN} = RIN volume, in gallons, for use in determining the number of gallon-RINs that shall be generated for the batch.

EV = Equivalence value for the batch of renewable fuel per § 80.1415.

V_s = Standardized volume of the batch of renewable fuel at 60 °F, in gallons, calculated in accordance with paragraph (f)(8) of this section.

(iii) If all the pathways describing the producer's operations have the same D code but individual batches are comprised of a mixture of fuel types with different equivalence values, then that D code shall be used in all the RINs generated and the number of gallon-RINs that shall be generated for a batch of renewable fuel shall be equal to a volume calculated according to the following formula:

$$V_{RIN} = \Sigma(EV_i * V_{s,i})$$

Where:

V_{RIN} = RIN volume, in gallons, for use in determining the number of gallon-RINs that shall be generated for the batch.

EV_i = Equivalence value for fuel type i in the batch of renewable fuel per § 80.1415.

$V_{s,i}$ = Standardized volume of fuel type i in the batch of renewable fuel at 60 °F, in gallons, calculated in accordance with paragraph (f)(8) of this section.

(iv) If the pathway applicable to a producer changes on a specific date, such that one pathway applies before the date and another pathway applies on and after the date, and each batch is of a single fuel type, then the applicable D code and batch identifier used in generating RINs must change on the date that the change in pathway occurs and the number of gallon-RINs that shall be generated for a batch of renewable fuel shall be equal to a volume calculated according to the following formula:

$$V_{RIN} = EV * V_s$$

Where:

V_{RIN} = RIN volume, in gallons, for use in determining the number of gallon-RINs that shall be generated for a batch with a single applicable D code.

EV = Equivalence value for the batch of renewable fuel per § 80.1415.

V_s = Standardized volume of the batch of renewable fuel at 60 °F, in gallons, calculated in accordance with paragraph (f)(8) of this section.

(v) If a producer produces batches that are comprised of a mixture of fuel types with different equivalence values and different applicable D codes, then separate values for V_{RIN} shall be calculated for each category of renewable fuel according to formulas in Table 3 to this section. All batch-RINs thus generated shall be assigned to unique batch identifiers for each portion of the batch with a different D code.

TABLE 3 TO § 80.1426—NUMBER OF GALLON-RINS TO ASSIGN TO BATCH-RINS WITH D CODES DEPENDENT ON FUEL TYPE

D code to use in batch-RIN	Number of gallon-RINs
D = 3	$V_{RIN,\ CB} = EV_{CB} * V_{s,\ CB}$
D = 4	$V_{RIN,\ BBD} = EV_{BBD} * V_{s,\ BBD}$
D = 5	$V_{RIN,\ AB} = EV_{AB} * V_{s,\ AB}$
D = 6	$V_{RIN,\ RF} = EV_{RF} * V_{s,\ RF}$
D = 7	$V_{RIN,\ CD} = EV_{CD} * V_{s,\ CD}$

Where:

$V_{RIN,CB}$ = RIN volume, in gallons, for use in determining the number of gallon-RINs that shall be generated for the cellulosic biofuel portion of the batch with a D code of 3.

$V_{RIN,BBD}$ = RIN volume, in gallons, for use in determining the number of gallon-RINs that shall be generated for the biomass-based diesel portion of the batch with a D code of 4.

$V_{RIN,AB}$ = RIN volume, in gallons, for use in determining the number of gallon-RINs that shall be generated for the advanced biofuel portion of the batch with a D code of 5.

$V_{RIN,RF}$ = RIN volume, in gallons, for use in determining the number of gallon-RINs that shall be generated for the renewable fuel portion of the batch with a D code of 6.

$V_{RIN,CD}$ = RIN volume, in gallons, for use in determining the number of gallon-RINs that shall be generated for the cellulosic diesel portion of the batch with a D code of 7.

EV_{CB} = Equivalence value for the cellulosic biofuel portion of the batch per § 80.1415.

EV_{BBD} = Equivalence value for the biomass-based diesel portion of the batch per § 80.1415.

EV_{AB} = Equivalence value for the advanced biofuel portion of the batch per § 80.1415.

EV_{RF} = Equivalence value for the renewable fuel portion of the batch per § 80.1415.

EV_{CD} = Equivalence value for the cellulosic diesel portion of the batch per § 80.1415.

$V_{s,CB}$ = Standardized volume at 60 °F of the portion of the batch that must be assigned a D code of 3, in gallons, calculated in accordance with paragraph (f)(8) of this section.

$V_{s,BBD}$ = Standardized volume at 60 °F of the portion of the batch that must be assigned a D code of 4, in gallons, calculated in accordance with paragraph (f)(8) of this section.

$V_{s,AB}$ = Standardized volume at 60 °F of the portion of the batch that must be assigned a D code of 5, in gallons, calculated in accordance with paragraph (f)(8) of this section.

$V_{s,RF}$ = Standardized volume at 60 °F of the portion of the batch that must be assigned a D code of 6, in gallons, calculated in accordance with paragraph (f)(8) of this section.

$V_{s,CD}$ = Standardized volume at 60 °F of the portion of the batch that must be assigned a D code of 7, in gallons, calculated in accordance with paragraph (f)(8) of this section.

(vi) If a producer produces a single type of renewable fuel using two or more different feedstocks which are processed simultaneously, and each batch is comprised of a single type of fuel, then the number of gallon-RINs that shall be generated for a batch of renewable fuel and assigned a particular D code shall be determined according to the formulas in Table 4 to this section.

Table 4 to §80.1426

Number of gallon-RINs to assign to batch-RINs with D codes dependent on feedstock

D code to use in batch-RIN	Number of gallon-RINs
D = 3	$V_{RIN,CB} = EV * V_s * \left(\frac{FE_3}{FE_3 + FE_4 + FE_3 + FE_6 + FE_7}\right)$
D = 4	$V_{RIN,BBD} = EV * V_s * \left(\frac{FE_4}{FE_3 + FE_4 + FE_5 + FE_6 + FE_7}\right)$
D = 5	$V_{RIN,AB} = EV * V_s * \left(\frac{FE_5}{FE_3 + FE_4 + FE_5 + FE_6 + FE_7}\right)$
D = 6	$V_{RIN,RF} = EV * V_s * \left(\frac{FE_6}{FE_3 + FE_4 + FE_5 + FE_6 + FE_7}\right)$
D = 7	$V_{RIN,CD} = EV * V_s * \left(\frac{FE_7}{FE_3 + FE_4 + FE_5 + FE_6 + FE_7}\right)$

Where:

$V_{RIN,CB}$ = RIN volume, in gallons, for use in determining the number of gallon-RINs that shall be generated for a batch of cellulosic biofuel with a D code of 3.

$V_{RIN,BBD}$ = RIN volume, in gallons, for use in determining the number of gallon-RINs that shall be generated for a batch of biomass-based diesel with a D code of 4.

$V_{RIN,AB}$ = RIN volume, in gallons, for use in determining the number of gallon-RINs that shall be generated for a batch of advanced biofuel with a D code of 5.

$V_{RIN,RF}$ = RIN volume, in gallons, for use in determining the number of gallon-RINs that shall be generated for a batch of renewable fuel with a D code of 6.

$V_{RIN,CD}$ = RIN volume, in gallons, for use in determining the number of gallon-RINs that shall be generated for a batch of cellulosic diesel with a D code of 7.

EV = Equivalence value for the renewable fuel per §80.1415.

V_s = Standardized volume of the batch of renewable fuel at 60 °F, in gallons, calculated in accordance with paragraph (f)(8) of this section.

FE_3 = Feedstock energy from all feedstocks whose pathways have been assigned a D code of 3 under Table 1 to this section, or a D code of 3 as approved by the Administrator, in Btu.

FE_4 = Feedstock energy from all feedstocks whose pathways have been assigned a D code of 4 under Table 1 to this section, or a D code of 4 as approved by the Administrator, in Btu.

FE_5 = Feedstock energy from all feedstocks whose pathways have been assigned a D code of 5 under Table 1 to this section, or a D code of 5 as approved by the Administrator, in Btu.

FE_6 = Feedstock energy from all feedstocks whose pathways have been assigned a D code of 6 under Table 1 to this section, or a D code of 6 as approved by the Administrator, in Btu.

FE_7 = Feedstock energy from all feedstocks whose pathways have been assigned a D code of 7 under Table 1 to this section, or

a D code of 7 as approved by the Administrator, in Btu.

Feedstock energy values, FE, shall be calculated according to the following formula:

$$FE = M * (1 - m) * CF * E$$

Where:

FE = Feedstock energy, in Btu.
M = Mass of feedstock, in pounds, measured on a daily or per-batch basis.
m = Average moisture content of the feedstock, in mass percent.
CF = Converted Fraction in annual average mass percent, representing that portion of the feedstock that is converted into renewable fuel by the producer.
E = Energy content of the components of the feedstock that are converted to renewable fuel, in annual average Btu/lb, determined according to paragraph (f)(7) of this section.

(4) *Renewable fuel that is produced by co-processing renewable biomass and non-renewable feedstocks simultaneously to produce a fuel that is partially renewable.* (i) The number of gallon-RINs that shall be generated for a batch of partially renewable fuel shall be equal to a volume V_{RIN} calculated according to Method A or Method B.

(A) *Method A.* (*1*) V_{RIN} shall be calculated according to the following formula:

$$V_{RIN} = EV * V_s * FE_R/(FE_R + FE_{NR})$$

Where:

V_{RIN} = RIN volume, in gallons, for use in determining the number of gallon-RINs that shall be generated for the batch.
EV = Equivalence value for the batch of renewable fuel per § 80.1415.
V_s = Standardized volume of the batch of renewable fuel at 60 °F, in gallons, calculated in accordance with paragraph (f)(8) of this section.
FE_R = Feedstock energy from renewable biomass used to make the transportation fuel, heating oil, or jet fuel, in Btu.
FE_{NR} = Feedstock energy from non-renewable feedstocks used to make the transportation fuel, heating oil, or jet fuel, in Btu.

(*2*) The value of FE for use in paragraph (f)(4)(i)(A)(*1*) of this section shall be calculated from the following formula:

$$FE = M * (1-m) * CF * E$$

Where:

FE = Feedstock energy, in Btu.
M = Mass of feedstock, in pounds, measured on a daily or per-batch basis.
m = Average moisture content of the feedstock, in mass percent.
CF = Converted Fraction in annual average mass percent, representing that portion of the feedstock that is converted into transportation fuel, heating oil, or jet fuel by the producer.
E = Energy content of the components of the feedstock that are converted to fuel, in annual average Btu/lb, determined according to paragraph (f)(7) of this section.

(B) *Method B.* V_{RIN} shall be calculated according to the following formula:

$$V_{RIN} = EV * V_s * R$$

Where:

V_{RIN} = RIN volume, in gallons, for use in determining the number of gallon-RINs that shall be generated for the batch.
EV = Equivalence value for the batch of renewable fuel per § 80.1415.
V_s = Standardized volume of the batch of renewable fuel at 60 °F, in gallons, calculated in accordance with paragraph (f)(8) of this section.
R = The renewable fraction of the fuel as measured by a carbon-14 dating test method as provided in paragraph (f)(9) of this section.

(ii) The D code that shall be used in the RINs generated to represent partially renewable transportation fuel, heating oil, or jet fuel shall be the D code specified in Table 1 to this section, or a D code as approved by the Administrator, which corresponds to the pathway that describes a producer's operations. In determining the appropriate pathway, the contribution of non-renewable feedstocks to the production of partially renewable fuel shall be ignored.

(5) *Renewable fuel produced from separated yard and food waste.* (i) *Separated yard waste and food waste* means, for the purposes of this section, waste that is one of the following:

(A) *Separated yard waste*, which is a feedstock stream consisting of yard waste kept separate since generation from other waste materials. Separated yard waste is deemed to be composed entirely of cellulosic materials.

(B) *Separated food waste*, which is a feedstock stream consisting of food waste kept separate since generation from other waste materials, and which includes food and beverage production

waste and post-consumer food and beverage waste. Separated food waste is deemed to be composed entirely of non-cellulosic materials, unless a party demonstrates that a portion of the feedstock is cellulosic through approval of their facility registration.

(C) *Separated municipal solid waste (separated MSW)*, which is material remaining after separation actions have been taken to remove recyclable paper, cardboard, plastics, rubber, textiles, metals, and glass from municipal solid waste, and which is composed of both cellulosic and non-cellulosic materials.

(ii)(A) A feedstock qualifies under paragraph (f)(5)(i)(A) or (f)(5)(i)(B) of this section only if it is collected according to a plan submitted to and accepted by U.S. EPA under the registration procedures specified in § 80.1450(b)(1)(vii).

(B) A feedstock qualifies under paragraph (f)(5)(i)(C) of this section only if it is collected according to a plan submitted to and approved by U.S. EPA.

(iii) Separation and recycling actions specified in paragraph (f)(5)(i)(C) of this section are considered to occur if:

(A) Recyclable paper, cardboard, plastics, rubber, textiles, metals, and glass that can be recycled are separated and removed from the municipal solid waste stream to the extent reasonably practicable according to a plan submitted to and approved by U.S. EPA under the registration procedures specified in § 80.1450(b)(1)(viii); and

(B) The fuel producer has evidence of all contracts relating to the disposition of paper, cardboard, plastics, rubber, textiles, metals, and glass that are recycled.

(iv)(A) The number of gallon-RINs that shall be generated for a batch of renewable fuel derived from separated yard waste as defined in paragraph (f)(5)(i)(A) of this section shall be equal to a volume V_{RIN} and is calculated according to the following formula:

$$V_{RIN} = EV * V_s$$

Where:

V_{RIN} = RIN volume, in gallons, for use in determining the number of cellulosic biofuel gallon-RINs that shall be generated for the batch.

EV = Equivalence value for the batch of renewable fuel per § 80.1415.

V_s = Standardized volume of the batch of renewable fuel at 60 °F, in gallons, calculated in accordance with paragraph (f)(8) of this section.

(B) The number of gallon-RINs that shall be generated for a batch of renewable fuel derived from separated food waste as defined in paragraph (f)(5)(i)(B) of this section shall be equal to a volume V_{RIN} and is calculated according to the following formula:

$$V_{RIN} = EV * V_s$$

Where:

V_{RIN} = RIN volume, in gallons, for use in determining the number of cellulosic or advanced biofuel gallon-RINs that shall be generated for the batch.

EV = Equivalence value for the batch of renewable fuel per § 80.1415.

V_s = Standardized volume of the batch of renewable fuel at 60 °F, in gallons, calculated in accordance with paragraph (f)(8) of this section.

(v) The number of cellulosic biofuel gallon-RINs that shall be generated for the cellulosic portion of a batch of renewable fuel derived from separated MSW as defined in paragraph (f)(5)(i)(C) of this section shall be determined according to the following formula:

$$V_{RIN} = EV * V_s * R$$

Where:

V_{RIN} = RIN volume, in gallons, for use in determining the number of cellulosic biofuel gallon-RINs that shall be generated for the batch.

EV = Equivalence value for the batch of renewable fuel per § 80.1415.

V_s = Standardized volume of the batch of renewable fuel at 60 °F, in gallons, calculated in accordance with paragraph (f)(8) of this section.

R = The calculated non-fossil fraction of the fuel as measured by a carbon-14 dating test method as provided in paragraph (f)(9) of this section.

(vi) The D code that shall be used in the RINs generated to represent separated yard waste, food waste, and MSW shall be the D code specified in Table 1 to this section, or a D code as approved by the Administrator, which corresponds to the pathway that describes the producer's operations and feedstocks.

(6) *Renewable fuel neither covered by the pathways in Table 1 to this section, nor given an approval by the Administrator for use of a specific D code.* If none

of the pathways described in Table 1 to this section apply to a producer's operations, and the producer has not received approval for the use of a specific D code by the Administrator, the party may generate RINs if the fuel from its facility is made from renewable biomass and qualifies for an exemption under § 80.1403 from the requirement that renewable fuel achieve at least a 20 percent reduction in lifecycle greenhouse gas emissions compared to baseline lifecycle greenhouse gas emissions.

(i) The number of gallon-RINs that shall be generated for a batch of renewable fuel that qualifies for an exemption from the 20 percent GHG reduction requirements under § 80.1403 shall be equal to a volume calculated according to the following formula:

$$V_{RIN} = EV * V_s$$

Where:

V_{RIN} = RIN volume, in gallons, for use in determining the number of gallon-RINs that shall be generated for the batch.

EV = Equivalence value for the batch of renewable fuel per § 80.1415.

V_s = Standardized volume of the batch of renewable fuel at 60 °F, in gallons, calculated in accordance with paragraph (f)(8) of this section.

(ii) A D code of 6 shall be used in the RINs generated under this paragraph (f)(6).

(7) *Determination of feedstock energy content factors.* (i) For purposes of paragraphs (f)(3)(vi) and (f)(4)(i)(A)(*2*) of this section, producers must specify the value for E, the energy content of the components of the feedstock that are converted to renewable fuel, used in the calculation of the feedstock energy value FE.

(ii) The value for E shall represent the higher or gross calorific heating value for a feedstock on a zero moisture basis.

(iii) Producers must specify the value for E for each type of feedstock at least once per calendar year.

(iv) A producer must use default values for E as provided in paragraph (f)(7)(vi) of this section, or must determine alternative values for its own feedstocks according to paragraph (f)(7)(v) of this section.

(v) Producers that do not use a default value for E must use the following test methods, or alternative test methods as approved by EPA, to determine the value of E. The value of E shall be based upon the test results of a sample of feedstock that, based upon good engineering judgment, is representative of the feedstocks used to produce renewable fuel:

(A) ASTM E 870 or ASTM E 711 for gross calorific value (both incorporated by reference, see § 80.1468).

(B) ASTM D 4442 or ASTM D 4444 for moisture content (both incorporated by reference, see § 80.1468).

(vi) *Default values for E.*

(A) Starch: 7,600 Btu/lb.

(B) Sugar: 7,300 Btu/lb.

(C) Vegetable oil: 17,000 Btu/lb.

(D) Waste cooking oil or trap grease: 16,600 Btu/lb.

(E) Tallow or fat: 16,200 Btu/lb.

(F) Manure: 6,900 Btu/lb.

(G) Woody biomass: 8,400 Btu/lb.

(H) Herbaceous biomass: 7,300 Btu/lb.

(I) Yard wastes: 2,900 Btu/lb.

(J) Biogas: 11,000 Btu/lb.

(K) Food waste: 2,000 Btu/lb.

(L) Paper: 7,200 Btu/lb.

(M) Crude oil: 19,100 Btu/lb.

(N) Coal—bituminous: 12,200 Btu/lb.

(O) Coal—anthracite: 13,300 Btu/lb.

(P) Coal—lignite or sub-bituminous: 7,900 Btu/lb.

(Q) Natural gas: 19,700 Btu/lb.

(R) Tires or rubber: 16,000 Btu/lb.

(S) Plastic: 19,000 Btu/lb.

(8) *Standardization of volumes.* In determining the standardized volume of a batch of renewable fuel for purposes of generating RINs under this paragraph (f), the batch volumes shall be adjusted to a standard temperature of 60 °F.

(i) For ethanol, the following formula shall be used:

$$V_{s,e} = V_{a,e} * (-0.0006301 * T + 1.0378)$$

Where:

$V_{s,e}$ = Standardized volume of ethanol at 60 °F, in gallons.

$V_{a,e}$ = Actual volume of ethanol, in gallons.

T = Actual temperature of the batch, in °F.

(ii) For biodiesel (mono-alkyl esters), one of the following two methods for biodiesel temperature standardization to 60 °Fahrenheit (°F) shall be used

(A) $V_{s,b} = V_{a,b} * (-0.00045767 * T + 1.02746025$

Where

$V_{s,b}$ = Standardized volume of biodiesel at 60 °F, in gallons.

$V_{a,b}$ = Actual volume of biodiesel, in gallons.
T = Actual temperature of the batch, in °F.

(B) The standardized volume of biodiesel at 60 °F, in gallons, as calculated from the use of the American Petroleum Institute Refined Products Table 6B, as referenced in ASTM D 1250 (incorporated by reference, see § 80.1468).

(iii) For other renewable fuels, an appropriate formula commonly accepted by the industry shall be used to standardize the actual volume to 60 °F. Formulas used must be reported to EPA, and may be determined to be inappropriate.

(9) *Use of radiocarbon dating test methods.* (i) Parties may use a radiocarbon dating test method for determination of the renewable fraction of a fuel R used to determine V_{RIN} as provided in paragraphs (f)(4) and (f)(5) of this section.

(ii) Parties must use Method B or Method C of ASTM D 6866 (incorporated by reference, *see* § 80.1468), or an alternative test method as approved by EPA.

(iii) For each batch of fuel, the value of R must be based on:

(A) A radiocarbon dating test of the batch of fuel produced; or

(B) A radiocarbon dating test of a composite sample of previously produced fuel, if all of the following conditions are met:

(*1*) Based upon good engineering judgment, the renewable fraction of the composite sample must be representative of the batch of fuel produced.

(*2*) The composite sample is comprised of a volume weighted combination of samples from every batch of partially renewable transportation fuel produced by the party over a period not to exceed one calendar month, or more frequently if necessary to ensure that the test results are representative of the renewable fraction of the partially renewable fuel.

(*3*) The composite sample must be well mixed prior to testing.

(*4*) A volume of each composite sample must be retained for a minimum of two years, and be of sufficient volume to permit two additional tests to be conducted.

(iv) If the party is using the composite sampling approach according to paragraph (f)(9)(iii)(B) of this section, the party may estimate the value of R for use in generating RINs in the first month if all of the following conditions are met:

(A) The estimate of R for the first month is based on information on the composition of the feedstock;

(B) The party calculates R in the second month based on the application of a radiocarbon dating test on a composite sample pursuant to (f)(9)(iii)(B) of this section; and

(C) The party adjusts the value of R used to generate RINs in the second month using the following formula

$$R_{i+1,adj} = 2 \times R_{i+1,calc} - R_{i,est}$$

Where

$R_{i+1,adj}$ = Adjusted value of R for use in generating RINs in month the second month i+1.

$R_{i+1,calc}$ = Calculated value of R in second month i+1 by applying a radiocarbon dating test method to a composite sample of fuel.

$R_{i,est}$ = Estimate of R for the first month i.

(10)(i) For purposes of this section, renewable electricity or biogas that is not introduced into a distribution system with fuels derived from non-renewable feedstocks is considered renewable fuel and the producer may generate RINs if all of the following apply:

(A) The fuel is produced from renewable biomass and qualifies for a D code in Table 1 to this section or has received approval for use of a D code by the Administrator;

(B) The fuel producer has entered into a written contract for the sale and use of a specific quantity of renewable electricity or biogas as transportation fuel; and

(C) The renewable electricity or biogas is used as a transportation fuel.

(ii) A producer of renewable electricity that is generated by co-firing a combination of renewable biomass and fossil fuel may generate RINs only for the portion attributable to the renewable biomass, using the procedure described in paragraph (f)(4) of this section.

(11)(i) For purposes of this section, renewable electricity or biogas that is introduced into a commercial distribution system may be considered renewable fuel and the producer may generate RINs if:

(A) The fuel is produced from renewable biomass and qualifies for a D code in Table 1 of this section or has received approval for use of a D code by the Administrator;

(B) The fuel producer has entered into a written contract for the sale of a specific quantity of fuel derived from renewable biomass sources with a party that uses fuel taken from a commercial distribution system for transportation purposes, and such fuel has been introduced into that commercial distribution system (e.g., pipeline, transmission line); and

(C) The quantity of biogas or renewable electricity for which RINs were generated was sold for use as transportation fuel and for no other purposes.

(ii) For biogas that is introduced into a commercial distribution system, the producer may generate RINs only for the volume of biogas that has been gathered, processed, and injected into a common carrier pipeline if:

(A) The gas that is ultimately withdrawn from that pipeline for transportation purposes is withdrawn in a manner and at a time consistent with the transport of fuel between the injection and withdrawal points; and

(B) The volume and heat content of biogas injected into the pipeline and the volume of gas used as transportation fuel are measured by continuous metering.

(iii) The fuel used for transportation purposes is considered produced from renewable biomass only to the extent that:

(A) The amount of fuel sold for use as transportation fuel matches the amount of fuel derived from renewable biomass that the producer contracted to have placed into the commercial distribution system; and

(B) No other party relied upon the contracted volume of biogas for the creation of RINs.

(iv) For renewable electricity that is generated by co-firing a combination of renewable biomass and fossil fuel, the producer may generate RINs only for the portion attributable to the renewable biomass, using the procedure described in paragraph (f)(4) of this section.

(12) For purposes of Table 1 to this section, process heat produced from combustion of gas at a renewable fuel facility is considered derived from biomass if the gas is biogas.

(i) For biogas directly transported to the facility without being placed in a commercial distribution system, all of the following conditions must be met:

(A) The producer has entered into a written contract for the procurement of a specific volume of biogas with a specific heat content.

(B) The volume of biogas was sold to the renewable fuel production facility, and to no other facility.

(C) The volume and heat content of biogas injected into the pipeline and the volume of gas used as process heat are measured by continuous metering.

(ii) For biogas that has been gathered, processed and injected into a common carrier pipeline, all of the following conditions must be met:

(A) The producer has entered into a written contract for the procurement of a specific volume of biogas with a specific heat content.

(B) The volume of biogas was sold to the renewable fuel production facility, and to no other facility.

(C) The volume of biogas that is withdrawn from the pipeline is withdrawn in a manner and at a time consistent with the transport of fuel between the injection and withdrawal points.

(D) The volume and heat content of biogas injected into the pipeline and the volume of gas used as process heat are measured by continuous metering.

(E) The common carrier pipeline into which the biogas is placed ultimately serves the producer's renewable fuel facility.

(iii) The process heat produced from combustion of gas at a renewable fuel facility described in paragraph (f)(12)(i) of this section shall not be considered derived from biomass if any other party relied upon the contracted volume of biogas for the creation of RINs.

(13) In order for facilities to satisfy the requirements of the advanced biofuel grain sorghum pathway all of the following conditions (in addition to other applicable requirements) apply.

(i) The quantity of electricity used at the site that is purchased from the grid must be measured and recorded by continuous metering.

(ii) All electricity used on-site that is not purchased from the grid must be produced on-site from biogas from landfills, waste treatment plants, and/or waste digesters.

(iii) For biogas directly transported to the facility without being placed in a commercial distribution system, all of the following conditions must be met:

(A) The producer has entered into a written contract for the procurement of biogas that specifies the volume of biogas, its heat content, and that the biogas must be derived from a landfill, waste treatment plant and/or waste digester.

(B) The volume of biogas was sold to the renewable fuel production facility, and to no other facility.

(C) The volume and heat content of biogas injected into the pipeline and the volume of gas used at the renewable fuel production facility are measured by continuous metering.

(iv) [Reserved]

(v) For biogas that has been gathered, processed and injected into a common carrier pipeline, all of the following conditions must be met:

(A) The producer has entered into a written contract for the procurement of biogas that specifies a specific volume of biogas, with a specific heat content, and that the biogas must be derived from a landfill, waste treatment plant and/or waste digester.

(B) The volume of biogas was sold to the renewable fuel production facility, and to no other facility.

(C) The volume of biogas that is withdrawn from the pipeline is withdrawn in a manner and at a time consistent with the transport of fuel between the injection and withdrawal points.

(D) The volume and heat content of biogas injected into the pipeline and the volume of gas used at the renewable fuel production facility are measured by continuous metering.

(E) The common carrier pipeline into which the biogas is placed ultimately serves the producer's renewable fuel facility.

(vi) No party relied upon the contracted volume of biogas for the creation of RINs.

(g) *Delayed RIN generation*—(1) Parties who produce or import renewable fuel may elect to generate delayed RINs to represent renewable fuel volumes that have already been transferred to another party if those renewable fuel volumes meet all of the following requirements.

(i) The renewable fuel volumes can be described by a new pathway that has been added to Table 1 to § 80.1426, or approved by petition pursuant to § 80.1416, after July 1, 2010.

(A) For new pathways that EPA approves in response to petitions submitted pursuant to § 80.1416, complete petitions must be received by EPA by January 31, 2011.

(B) [Reserved]

(ii) The renewable fuel volumes can be described by a pathway that:

(A) Is biodiesel that is made from canola oil through transesterification using natural gas or biomass for process energy; or

(B) EPA has determined was in use as of July 1, 2010, for the primary purpose of producing transportation fuel, heating oil, or jet fuel for commercial sale.

(iii) The renewable fuel volumes were not designated or intended for export from the 48 contiguous states plus Hawaii by the renewable fuel producer or importer, and the producer or importer of the renewable fuel volumes does not know or have reason to know that the volumes were exported from the 48 contiguous states plus Hawaii.

(2) When a new pathway is added to Table 1 to § 80.1426 or approved by petition pursuant to § 80.1416, EPA will specify in its approval action the effective date on which the new pathway becomes valid for the generation of RINs and whether the fuel in question meets the requirements of paragraph (g)(1)(ii) of this section.

(i) The effective date for the pathway describing biodiesel that is made from canola oil through transesterification using natural gas or biomass for process energy is September 28, 2010.

(ii) [Reserved]

(3) Delayed RINs can only be generated to represent renewable fuel volumes produced in the 48 contiguous states plus Hawaii or imported into the

48 contiguous states plus Hawaii between July 1, 2010, and the earlier of either of the following dates:

(i) The effective date (identified pursuant to paragraph (g)(2) of this section) of the new pathway through which the fuel in question was produced; or

(ii) December 31, 2011.

(4) Delayed RINs must be generated no later than 60 days after the effective date (identified pursuant to paragraph (g)(2) of this section) of the pathway by which the fuel in question was produced.

(5) A party authorized pursuant to paragraph (g)(1) of this section to generate delayed RINs, and electing to do so, who generated RINs pursuant to 80.1426(f)(6) for fuel produced through a pathway described in paragraph (g)(1) of this section, and transferred those RINs with renewable fuel volumes between July 1, 2010 and the effective date (identified pursuant to paragraph (g)(2) of this section) of that pathway, must retire a number of gallon-RINs prior to generating delayed RINs.

(i) The number of gallon-RINs retired by a party pursuant to this paragraph must not exceed the number of gallon-RINs originally generated by the party to represent fuel described in paragraph (g)(1) of this section that was produced in the 48 contiguous states plus Hawaii or imported into the 48 contiguous states plus Hawaii, and transferred to another party, between July 1, 2010 and the earlier of either of the following dates:

(A) The effective date (identified pursuant to paragraph (g)(2) of this section) of the new pathway through which the fuel in question was produced; or

(B) December 31, 2011.

(ii) Retired RINs must have a D code of 6.

(iii) Retired RINs must have a K code of 2.

(iv) Retired RINs must have been generated in the same year as the gallon-RINs originally generated by the party to represent fuel described in paragraph (g)(1) of this section.

(A) For gallon-RINs originally generated in 2010 to represent fuel described in paragraph (g)(1) of this section, the generation year of retired RINs shall be 2010.

(B) For gallon-RINs originally generated in 2011 to represent fuel described in paragraph (g)(1) of this section, the generation year of retired RINs shall be 2011.

(6) For parties that retire RINs pursuant to paragraph (g)(5) of this section, the number of delayed gallon-RINs generated shall be equal to the number of gallon-RINs retired in accordance with paragraph (g)(5) of this section.

(7) A party authorized pursuant to paragraph (g)(1) of this section to generate delayed RINs, and electing to do so, who did not generate RINs pursuant to § 80.1426(f)(6) for renewable fuel produced in the 48 contiguous states plus Hawaii or imported into the 48 contiguous states plus Hawaii between July 1, 2010 and the effective date (identified pursuant to paragraph (g)(2) of this section) of a new pathway for the fuel in question, may generate a number of delayed gallon-RINs for that renewable fuel in accordance with paragraph (f) of this section.

(i) The standardized volume of fuel (V_s) used by a party to determine the RIN volume (V_{RIN}) under paragraph (f) of this section shall be the standardized volume of the fuel described in paragraph (g)(1)(i) of this section that was produced in the 48 contiguous states plus Hawaii or imported into the 48 contiguous states plus Hawaii by the party, and transferred to another party, between July 1, 2010 and the earlier of either of the following dates:

(A) The effective date (identified pursuant to paragraph (g)(2) of this section) of the new pathway through which the fuel in question was produced; or

(B) December 31, 2011.

(ii) [Reserved]

(8) The renewable fuel for which delayed RINs are generated must be described by a pathway that satisfies the requirements of paragraph (g)(1) of this section.

(9) All delayed RINs generated by a renewable fuel producer or importer must be generated within EMTS on the same date.

(10) The generation year of delayed RINs as designated in EMTS shall be

the year that the renewable fuel volumes they represent were either produced or imported into the 48 contiguous states plus Hawaii.

(i) For renewable fuel volumes produced or imported in 2010, the generation year of delayed RINs shall be 2010 and the production date specified in EMTS shall be 07/01/2010.

(ii) For renewable fuel volumes produced or imported in 2011, the generation year of delayed RINs shall be 2011 and the production date specified in EMTS shall be 01/01/2011.

(11) Delayed RINs shall be generated as assigned RINs in EMTS with a batch number that begins with ''DRN'', and then immediately separated by the RIN generator.

(12) The D code that shall be used in delayed RINs shall be the D code which corresponds to the new pathway.

(13) Except as provided in this paragraph (g), all other provisions in this Subpart M that pertain to the identification of fuels for which RINs may be generated, the generation and use of RINs, and recordkeeping and reporting, are also applicable to delayed RINs.

[75 FR 14863, Mar. 26, 2010, as amended at 75 FR 26038, May 10, 2010; 75 FR 37733, June 30, 2010; 75 FR 59632, Sept. 28, 2010; 75 FR 76828, Dec. 9, 2010; 75 FR 79977, Dec. 21, 2010; 77 FR 1355, Jan. 9, 2012; 77 FR 61294, Oct. 9, 2012; 77 FR 74605, Dec. 17, 2012; 78 FR 14216, Mar. 5, 2013]

§ 80.1427 How are RINs used to demonstrate compliance?

(a) *Renewable Volume Obligations.* (1) Except as specified in paragraph (b) of this section or § 80.1456, each party that is an obligated party under § 80.1406 and is obligated to meet the Renewable Volume Obligations under § 80.1407, or is an exporter of renewable fuels that is obligated to meet Renewable Volume Obligations under § 80.1430, must demonstrate pursuant to § 80.1451(a)(1) that it is retiring for compliance purposes a sufficient number of RINs to satisfy the following equations:

(i) *Cellulosic biofuel.*

$$(\Sigma RINNUM)_{CB,i} + (\Sigma RINNUM)_{CB,i-1} = RVO_{CB,i}$$

Where:

$(\Sigma RINNUM)_{CB,i}$ = Sum of all owned gallon-RINs that are valid for use in complying with the cellulosic biofuel RVO, were generated in year i, and are being applied towards the $RVO_{CB,i}$, in gallons.

$(\Sigma RINNUM)_{CB,i-1}$ = Sum of all owned gallon-RINs that are valid for use in complying with the cellulosic biofuel RVO, were generated in year i-1, and are being applied towards the $RVO_{CB,i}$, in gallons.

$RVO_{CB,i}$ = The Renewable Volume Obligation for cellulosic biofuel for the obligated party or renewable fuel exporter for calendar year i, in gallons, pursuant to § 80.1407 or § 80.1430.

(ii) *Biomass-based diesel.* Use the equation in this paragraph, except as provided in paragraph (a)(7) of this section.

$$(\Sigma RINNUM)_{BBD,i} + (\Sigma RINNUM)_{BBD,i-1} = RVO_{BBD,i}$$

Where:

$(\Sigma RINNUM)_{BBD,i}$ = Sum of all owned gallon-RINs that are valid for use in complying with the biomass-based diesel RVO, were generated in year i, and are being applied towards the $RVO_{BBD,i}$, in gallons.

$(\Sigma RINNUM)_{BBD,i-1}$ = Sum of all owned gallon-RINs that are valid for use in complying with the biomass-based diesel RVO, were generated in year i-1, and are being applied towards the $RVO_{BBD,i}$, in gallons.

$RVO_{BBD,i}$ = The Renewable Volume Obligation for biomass-based diesel for the obligated party or renewable fuel exporter for calendar year i after 2010, in gallons, pursuant to § 80.1407 or § 80.1430.

(iii) *Advanced biofuel.*

$$(\Sigma RINNUM)_{AB,i} + (\Sigma RINNUM)_{AB,i-1} = RVO_{AB,i}$$

Where

$(\Sigma RINNUM)_{AB,i}$ = Sum of all owned gallon-RINs that are valid for use in complying with the advanced biofuel RVO, were generated in year i, and are being applied towards the $RVO_{AB,i}$, in gallons.

$(\Sigma RINNUM)_{AB,i-1}$ = Sum of all owned gallon-RINs that are valid for use in complying with the advanced biofuel RVO, were generated in year i-1, and are being applied towards the $RVO_{AB,i}$, in gallons.

$RVO_{AB,i}$ = The Renewable Volume Obligation for advanced biofuel for the obligated party or renewable fuel exporter for calendar year i, in gallons, pursuant to § 80.1407 or § 80.1430.

(iv) *Renewable fuel.*

$$(\Sigma RINNUM)_{RF,i} + (\Sigma RINNUM)_{RF,i-1} = RVO_{RF,i}$$

Where:

$(\Sigma RINNUM)_{RF,i}$ = Sum of all owned gallon-RINs that are valid for use in complying

with the renewable fuel RVO, were generated in year i, and are being applied towards the $RVO_{RF,i}$, in gallons.

$(\Sigma RINNUM)_{RF,i-1}$ = Sum of all owned gallon-RINs that are valid for use in complying with the renewable fuel RVO, were generated in year i-1, and are being applied towards the $RVO_{RF,i}$, in gallons.

$RVO_{RF,i}$ = The Renewable Volume Obligation for renewable fuel for the obligated party or renewable fuel exporter for calendar year i, in gallons, pursuant to § 80.1407 or § 80.1430.

(2) Except as described in paragraph (a)(4) of this section, RINs that are valid for use in complying with each Renewable Volume Obligation are determined by their D codes.

(i) RINs with a D code of 3 or 7 are valid for compliance with the cellulosic biofuel RVO.

(ii) RINs with a D code of 4 or 7 are valid for compliance with the biomass-based diesel RVO.

(iii) RINs with a D code of 3, 4, 5, or 7 are valid for compliance with the advanced biofuel RVO.

(iv) RINs with a D code of 3, 4, 5, 6, or 7 are valid for compliance with the renewable fuel RVO.

(3)(i) Except as provided in paragraph (a)(3)(ii) of this section, a party may use the same RIN to demonstrate compliance with more than one RVO so long as it is valid for compliance with all RVOs to which it is applied.

(ii) A cellulosic diesel RIN with a D code of 7 cannot be used to demonstrate compliance with both a cellulosic biofuel RVO and a biomass-based diesel RVO.

(4) Notwithstanding the requirements of § 80.1428(c) or paragraph (a)(6)(i) of this section, for purposes of demonstrating compliance for calendar years 2010 or 2011, RINs generated pursuant to § 80.1126 that have not been used for compliance purposes may be used for compliance in 2010 or 2011, as follows, insofar as permissible pursuant to paragraphs (a)(5) and (a)(7)(iii) of this section:

(i) A RIN generated pursuant to § 80.1126 with a D code of 2 and an RR code of 15, 16, or 17 is deemed equivalent to a RIN generated pursuant to § 80.1426 having a D code of 4.

(ii) A RIN generated pursuant to § 80.1126 with a D code of 1 is deemed equivalent to a RIN generated pursuant to § 80.1426 having a D code of 3.

(iii) All other RINs generated pursuant to § 80.1126 are deemed equivalent to RINs generated pursuant to § 80.1426 having D codes of 6.

(iv) A RIN generated pursuant to § 80.1126 that was retired pursuant to § 80.1129(e) because the associated volume of fuel was not used as motor vehicle fuel may be reinstated for use in complying with a 2010 RVO pursuant to § 80.1429(g).

(5) The value of $(\Sigma RINNUM)_{i-1}$ may not exceed values determined by the following inequalities except as provided in paragraph (a)(7)(iii) of this section and § 80.1442(d)

$$(\Sigma RINNUM)_{CB,i-1} \leq 0.20 * RVO_{CB,i}$$
$$(\Sigma RINNUM)_{BBD,i-1} \leq 0.20 * RVO_{BBD,i}$$
$$(\Sigma RINNUM)_{AB,i-1} \leq 0.20 * RVO_{AB,i}$$
$$(\Sigma RINNUM)_{RF,i-1} \leq 0.20 * RVO_{RF,i}$$

(6) Except as provided in paragraph (a)(7) of this section:

(i) RINs may only be used to demonstrate compliance with the RVOs for the calendar year in which they were generated or the following calendar year.

(ii) RINs used to demonstrate compliance in one year cannot be used to demonstrate compliance in any other year.

(7) *Biomass-based diesel in 2010.*

(i) Prior to determining compliance with the 2010 biomass-based diesel RVO, obligated parties may reduce the value of $RVO_{BBD,2010}$ by an amount equal to the sum of all 2008 and 2009 RINs that they used for compliance purposes for calendar year 2009 which have a D code of 2 and an RR code of 15, 16, or 17.

(ii) For calendar year 2010 only, the following equation shall be used to determine compliance with the biomass-based diesel RVO instead of the equation in paragraph (a)(1)(ii) of this section

$$(\Sigma RINNUM)_{BBD,2010} + (\Sigma RINNUM)_{BBD,2009} + (\Sigma RINNUM)_{BBD,2008} = RVO_{BBD,2010}$$

Where

$(\Sigma RINNUM)_{BBD,2010}$ = Sum of all owned gallon-RINs that are valid for use in complying with the biomass-based diesel RVO, were generated in year 2010, and are being applied towards the $RVO_{BBD,2010}$, in gallons.

$(\Sigma RINNUM)_{BBD,2009}$ = Sum of all owned gallon-RINs that are valid for use in complying with the biomass-based diesel RVO, were generated in year 2009, have not previously been used for compliance purposes, and are being applied towards the $RVO_{BBD,2010}$, in gallons.

$(\Sigma RINNUM)_{BBD,2008}$ = Sum of all owned gallon-RINs that are valid for use in complying with the biomass-based diesel RVO, were generated in year 2008, have not previously been used for compliance purposes, and are being applied towards the $RVO_{BBD,2010}$, in gallons.

$RVO_{BBD,2010}$ = The Renewable Volume Obligation for biomass-based diesel for the obligated party for calendar year 2010, in gallons, pursuant to § 80.1407 or § 80.1430, as adjusted by paragraph (a)(7)(i) of this section.

(iii) The values of $(\Sigma RINNUM)_{2008}$ and $(\Sigma RINNUM)_{2009}$ may not exceed values determined by both of the following inequalities

$$(\Sigma RINNUM)_{BBD,2008} \leq 0.087 * RVO_{BBD,2010}$$

$$(\Sigma RINNUM)_{BBD,2008} + (\Sigma RINNUM)_{BBD,2009} \leq 0.20 * RVO_{BBD,2010}$$

(8) A party may only use a RIN for purposes of meeting the requirements of paragraph (a)(1) or (a)(7) of this section if that RIN is a separated RIN with a K code of 2 obtained in accordance with §§ 80.1428 and 80.1429.

(9) The number of gallon-RINs associated with a given batch-RIN that can be used for compliance with the RVOs shall be calculated from the following formula:

$$RINNUM = EEEEEEEE - SSSSSSSS + 1$$

Where:

RINNUM = Number of gallon-RINs associated with a batch-RIN, where each gallon-RIN represents one gallon of renewable fuel for compliance purposes.

EEEEEEEE = Batch-RIN component identifying the last gallon-RIN associated with the batch-RIN.

SSSSSSSS = Batch-RIN component identifying the first gallon-RIN associated with the batch-RIN.

(b) *Deficit carryovers.* (1) An obligated party or an exporter of renewable fuel that fails to meet the requirements of paragraph (a)(1) or (a)(7) of this section for calendar year i is permitted to carry a deficit into year i+1 under the following conditions:

(i) The party did not carry a deficit into calendar year i from calendar year i-1 for the same RVO.

(ii) The party subsequently meets the requirements of paragraph (a)(1) of this section for calendar year i+1 and carries no deficit into year i+2 for the same RVO.

(iii) For compliance with the biomass-based diesel RVO in calendar year 2011, the deficit which is carried over from 2010 is no larger than 57% of the party's 2010 biomass-based diesel RVO as determined prior to any adjustment applied pursuant to paragraph (a)(7)(i) of this section.

(iv) The party uses the same compliance approach in year i+1 as it did in year i, as provided in § 80.1406(c)(2).

(2) A deficit is calculated according to the following formula:

$$D_i = RVO_i - [(\Sigma RINNUM)_i + (\Sigma RINNUM)_{i-1}]$$

Where:

D_i = The deficit, in gallons, generated in calendar year i that must be carried over to year i+1 if allowed pursuant to paragraph (b)(1) of this section.

RVO_i = The Renewable Volume Obligation for the obligated party or renewable fuel exporter for calendar year i, in gallons.

$(\Sigma RINNUM)_i$ = Sum of all acquired gallon-RINs that were generated in year i and are being applied towards the RVO_i, in gallons.

$(\Sigma RINNUM)_{i-1}$ = Sum of all acquired gallon-RINs that were generated in year i-1 and are being applied towards the RVO_i, in gallons.

[75 FR 14863, Mar. 26, 2010, as amended at 75 FR 26042, May 10, 2010]

§ 80.1428 General requirements for RIN distribution.

(a) *RINs assigned to volumes of renewable fuel.*

(1) *Assigned RIN*, for the purposes of this subpart, means a RIN assigned to a volume of renewable fuel pursuant to § 80.1426(e) with a K code of 1.

(2) Except as provided in § 80.1429, no person can separate a RIN that has been assigned to a batch pursuant to § 80.1426(e).

(3) An assigned RIN cannot be transferred to another person without simultaneously transferring a volume of renewable fuel to that same person.

(4) No more than 2.5 assigned gallon-RINs with a K code of 1 can be transferred to another person with every gallon of renewable fuel transferred to that same person.

(5)(i) On each of the dates listed in paragraph (a)(5)(ii) of this section in any calendar year, the following equation must be satisfied for assigned RINs and volumes of renewable fuel owned by a person:

$$\Sigma(RIN)_D \leq \Sigma(V_{si} * 2.5)_D$$

Where:

D = Applicable date.

$\Sigma(RIN)_D$ = Sum of all assigned gallon-RINs with a K code of 1 that are owned on date D.

$(V_{si})_D$ = Volume i of renewable fuel owned on date D, standardized to 60 °F, in gallons.

(ii) The applicable dates are March 31, June 30, September 30, and December 31.

(6) Any transfer of ownership of assigned RINs must be documented on product transfer documents generated pursuant to § 80.1453.

(i) The RIN must be recorded on the product transfer document used to transfer ownership of the volume of renewable fuel to another person; or

(ii) The RIN must be recorded on a separate product transfer document transferred to the same person on the same day as the product transfer document used to transfer ownership of the volume of renewable fuel.

(b) *RINs separated from volumes of renewable fuel.* (1) *Separated RIN*, for the purposes of this subpart, means a RIN with a K code of 2 that has been separated from a volume of renewable fuel pursuant to § 80.1429.

(2) Any person that has registered pursuant to § 80.1450 can own a separated RIN.

(3) Separated RINs can be transferred any number of times.

(c) *RIN expiration.* Except as provided in § 80.1427(a)(7), a RIN is valid for compliance during the calendar year in which it was generated, or the following calendar year. Any RIN that is not used for compliance purposes for the calendar year in which it was generated, or for the following calendar year, will be considered an expired RIN. Pursuant to § 80.1431(a), an expired RIN will be considered an invalid RIN and cannot be used for compliance purposes.

(d) Any batch-RIN can be divided into multiple batch-RINs, each representing a smaller number of gallon-RINs, if all of the following conditions are met:

(1) All RIN components other than SSSSSSSS and EEEEEEEE are identical for the original parent and newly formed daughter RINs.

(2) The sum of the gallon-RINs associated with the multiple daughter batch-RINs is equal to the gallon-RINs associated with the parent batch-RIN.

[75 FR 14863, Mar. 26, 2010, as amended at 75 FR 26042, May 10, 2010]

§ 80.1429 Requirements for separating RINs from volumes of renewable fuel.

(a)(1) Separation of a RIN from a volume of renewable fuel means termination of the assignment of the RIN to a volume of renewable fuel.

(2) RINs that have been separated from volumes of renewable fuel become separated RINs subject to the provisions of § 80.1428(b).

(b) A RIN that is assigned to a volume of renewable fuel can be separated from that volume only under one of the following conditions:

(1) Except as provided in paragraphs (b)(7) and (b)(9) of this section, a party that is an obligated party according to § 80.1406 must separate any RINs that have been assigned to a volume of renewable fuel if that party owns that volume.

(2) Except as provided in paragraph (b)(6) of this section, any party that owns a volume of renewable fuel must separate any RINs that have been assigned to that volume once the volume is blended with gasoline or fossil-based diesel to produce a transportation fuel, heating oil, or jet fuel. A party may separate up to 2.5 RINs per gallon of blended renewable fuel.

(3) Any party that exports a volume of renewable fuel must separate any RINs that have been assigned to the exported volume. A party may separate up to 2.5 RINs per gallon of exported renewable fuel.

(4) Any party that produces, imports, owns, sells, or uses a volume of neat renewable fuel, or a blend of renewable

fuel and diesel fuel, must separate any RINs that have been assigned to that volume of neat renewable fuel or that blend if:

(i) The party designates the neat renewable fuel or blend as transportation fuel, heating oil, or jet fuel; and

(ii) The neat renewable fuel or blend is used without further blending, in the designated form, as transportation fuel, heating oil, or jet fuel.

(5) Any party that produces, imports, owns, sells, or uses a volume of electricity or biogas for which RINs have been generated in accordance with § 80.1426(f) must separate any RINs that have been assigned to that volume of renewable electricity or biogas if:

(i) The party designates the electricity or biogas as transportation fuel; and

(ii) The electricity or biogas is used as transportation fuel.

(6) RINs assigned to a volume of biodiesel (mono-alkyl ester) can only be separated from that volume pursuant to paragraph (b)(2) of this section if such biodiesel is blended into diesel fuel at a concentration of 80 volume percent biodiesel (mono-alkyl ester) or less.

(i) This paragraph (b)(6) shall not apply to biodiesel owned by obligated parties or to exported volumes of biodiesel.

(ii) This paragraph (b)(6) shall not apply to parties meeting the requirements of paragraph (b)(4) of this section.

(7) For RINs that an obligated party generates for renewable fuel that has not been blended into gasoline or diesel to produce a transportation fuel, heating oil, or jet fuel, the obligated party can only separate such RINs from volumes of renewable fuel if the number of gallon-RINs separated in a calendar year are less than or equal to a limit set as follows:

(i) For RINs with a D code of 3, the limit shall be equal to RVO_{CB}.

(ii) For RINs with a D code of 4, the limit shall be equal to RVO_{BBD}.

(iii) For RINs with a D code of 7, the limit shall be equal to the larger of RVO_{BBD} or RVO_{CB}.

(iv) For RINs with a D code of 5, the limit shall be equal to $RVO_{AB} - RVO_{CB} - RVO_{BBD}$.

(v) For RINs with a D code of 6, the limit shall be equal to $RVO_{RF} - RVO_{AB}$.

(8) Small refiners and small refineries may only separate RINs that have been assigned to volumes of renewable fuel that the party blends into gasoline or diesel to produce transportation fuel, heating oil, or jet fuel, or that the party used as transportation fuel, heating oil, or jet fuel. This paragraph (b)(8) shall apply only under the following conditions:

(i) During the calendar year in which the party has received a small refinery exemption under § 80.1441 or a small refiner exemption under § 80.1442; and

(ii) The party is not otherwise an obligated party during the period of time that the small refinery or small refiner exemption is in effect.

(9) Except as provided in paragraphs (b)(2) through (b)(5) and (b)(8) of this section, parties whose non-export renewable volume obligations are solely related to either the importation of products listed in § 80.1407(c) or § 80.1407(e) or to the addition of blendstocks into a volume of finished gasoline, finished diesel fuel, RBOB, or CBOB, can only separate RINs from volumes of renewable fuel if the number of gallon-RINs separated in a calendar year is less than or equal to a limit set as follows:

(i) For RINs with a D code of 3, the limit shall be equal to RVO_{CB}.

(ii) For RINs with a D code of 4, the limit shall be equal to RVO_{BBD}.

(iii) For RINs with a D code of 7, the limit shall be equal to the larger of RVO_{BBD} or RVO_{CB}.

(iv) For RINs with a D code of 5, the limit shall be equal to $RVO_{AB} - RVO_{CB} - RVO_{BBD}$.

(v) For RINs with a D code of 6, the limit shall be equal to $RVO_{RF} - RVO_{AB}$.

(c) The party responsible for separating a RIN from a volume of renewable fuel shall change the K code in the RIN from a value of 1 to a value of 2 prior to transferring the RIN to any other party.

(d) Upon and after separation of a RIN from its associated volume of renewable fuel, the separated RIN must be accompanied by a PTD pursuant to § 80.1453 when transferred to another party.

(e) Upon and after separation of a RIN from its associated volume of renewable fuel, product transfer documents used to transfer ownership of the volume must meet the requirements of § 80.1453.

(f) Any party that uses a renewable fuel in any application that is not transportation fuel, heating oil, or jet fuel, or designates a renewable fuel for use as something other than transportation fuel, heating oil, or jet fuel, must retire any RINs received with that renewable fuel and report the retired RINs in the applicable reports under § 80.1451.

(g) Any 2009 or 2010 RINs retired pursuant to § 80.1129 because renewable fuel was used in a nonroad vehicle or nonroad engine (except for ocean-going vessels), or as heating oil or jet fuel may be reinstated by the retiring party for sale or use to demonstrate compliance with a 2010 RVO.

[75 FR 14863, Mar. 26, 2010, as amended at 75 FR 26042, May 10, 2010; 77 FR 1355, Jan. 9, 2012]

§ 80.1430 Requirements for exporters of renewable fuels.

(a) Any party that owns any amount of renewable fuel, whether in its neat form or blended with gasoline or diesel, that is exported from any of the regions described in § 80.1426(b) shall acquire sufficient RINs to comply with all applicable Renewable Volume Obligations under paragraphs (b) through (e) of this section representing the exported renewable fuel.

(b) *Renewable Volume Obligations.* An exporter of renewable fuel shall determine its Renewable Volume Obligations from the volumes of the renewable fuel exported.

(1) *Cellulosic biofuel.*

$$RVO_{CB,i} = \Sigma(VOL_k * EV_k)_i + D_{CB,i-1}$$

Where:

$RVO_{CB,i}$ = The Renewable Volume Obligation for cellulosic biofuel for the exporter for calendar year i, in gallons.

k = A discrete volume of exported renewable fuel.

VOL_k = The standardized volume of discrete volume k of exported renewable fuel that the exporter knows or has reason to know is cellulosic biofuel, in gallons, calculated in accordance with § 80.1426(f)(8).

EV_k = The equivalence value associated with discrete volume k.

Σ = Sum involving all volumes of cellulosic biofuel exported.

$D_{CB,i-1}$ = Deficit carryover from the previous year for cellulosic biofuel, in gallons.

(2) *Biomass-based diesel.*

$$RVO_{BBD,i} = \Sigma(VOL_k * EV_k)_i + D_{BBD,i-1}$$

Where:

$RVO_{BBD,i}$ = The Renewable Volume Obligation for biomass-based diesel for the exporter for calendar year i, in gallons.

k = A discrete volume of exported renewable fuel.

VOL_k = The standardized volume of discrete volume k of exported renewable fuel that is biodiesel or renewable diesel, in gallons, calculated in accordance with § 80.1426(f)(8).

EV_k = The equivalence value associated with discrete volume k.

Σ = Sum involving all volumes of biodiesel or renewable diesel exported.

$D_{BBD,i-1}$ = Deficit carryover from the previous year for biomass-based diesel, in gallons.

(3) *Advanced biofuel.*

$$RVO_{AB,i} = \Sigma(VOL_k * EV_k)_i + D_{AB,i-1}$$

Where:

$RVO_{AB,i}$ = The Renewable Volume Obligation for advanced biofuel for the exporter for calendar year i, in gallons.

k = A discrete volume of exported renewable fuel.

VOL_k = The standardized volume of discrete volume k of exported renewable fuel that is biodiesel or renewable diesel, or that the exporter knows or has reason to know is cellulosic biofuel or advanced biofuel, in gallons, calculated in accordance with § 80.1426(f)(8).

EV_k = The equivalence value associated with discrete volume k.

Σ = Sum involving all volumes of advanced biofuel exported.

$D_{AB,i-1}$ = Deficit carryover from the previous year for advanced biofuel, in gallons.

(4) *Renewable fuel.*

$$RVO_{RF,i} = \Sigma(VOL_k * EV_k)_i + D_{RF,i-1}$$

Where:

$RVO_{RF,i}$ = The Renewable Volume Obligation for renewable fuel for the exporter for calendar year i, in gallons.

k = A discrete volume of exported renewable fuel.

VOL_k = The standardized volume of discrete volume k of any exported renewable fuel, in gallons, calculated in accordance with § 80.1426(f)(8).

EV_k = The equivalence value associated with discrete volume k.

Σ = Sum involving all volumes of renewable fuel exported.

$D_{RF,i-1}$ = Deficit carryover from the previous year for renewable fuel, in gallons.

(c) If the exporter knows or has reason to know that a volume of exported renewable fuel is cellulosic diesel, he must treat the exported volume as either cellulosic biofuel or biomass-based diesel when determining his Renewable Volume Obligations pursuant to paragraph (b) of this section.

(d) For the purposes of calculating the Renewable Volume Obligations:

(1) If the equivalence value for a volume of exported renewable fuel can be determined pursuant to § 80.1415 based on its composition, then the appropriate equivalence value shall be used in the calculation of the exporter's Renewable Volume Obligations under paragraph (b) of this section.

(2) If the category of the exported renewable fuel is known to be biomass-based diesel but the composition is unknown, the value of EV_k shall be 1.5.

(3) If neither the category nor composition of a volume of exported renewable fuel can be determined, the value of EV_k shall be 1.0.

(e) For renewable fuels that are in the form of a blend with gasoline or diesel at the time of export, the exporter shall determine the volume of exported renewable fuel based on one of the following:

(1) Information from the supplier of the blend of the concentration of renewable fuel in the blend.

(2) Determination of the renewable portion of the blend using Method B or Method C of ASTM D 6866 (incorporated by reference, see § 80.1468), or an alternative test method as approved by the EPA.

(3) Assuming the maximum concentration of the renewable fuel in the blend as allowed by law and/or regulation.

(f) Each exporter of renewable fuel must demonstrate compliance with its RVOs pursuant to § 80.1427.

[75 FR 14863, Mar. 26, 2010, as amended at 75 FR 26042, May 10, 2010]

§ 80.1431 Treatment of invalid RINs.

(a) *Invalid RINs.*

(1) An invalid RIN is a RIN that is any of the following:

(i) A duplicate of a valid RIN.

(ii) Was based on incorrect volumes or volumes that have not been standardized to 60 °F.

(iii) Has expired, as provided in § 80.1428(c).

(iv) Was based on an incorrect equivalence value.

(v) Deemed invalid under § 80.1467(g).

(vi) Does not represent renewable fuel as defined in § 80.1401.

(vii) Was assigned an incorrect ''D'' code value under § 80.1426(f) for the associated volume of fuel.

(viii) Was improperly separated pursuant to § 80.1429.

(ix) Was otherwise improperly generated.

(2) In the event that the same RIN is transferred to two or more parties, all such RINs are deemed invalid, unless EPA in its sole discretion determines that some portion of these RINs is valid.

(b) In the case of RINs that are invalid, the following provisions apply:

(1) Upon determination by any party that RINs owned are invalid, the party must keep copies and adjust its records, reports, and compliance calculations in which the invalid RINs were used. The party must retire the invalid RINs in the applicable RIN transaction reports under § 80.1451(c)(2) for the quarter in which the RINs were determined to be invalid.

(2) Invalid RINs cannot be used to achieve compliance with the Renewable Volume Obligations of an obligated party or exporter, regardless of the party's good faith belief that the RINs were valid at the time they were acquired.

(3) Any valid RINs remaining after invalid RINs are retired must first be applied to correct the transfer of invalid RINs to another party before applying the valid RINs to meet the party's Renewable Volume Obligations at the end of the compliance year.

(c) Notwithstanding paragraph (b) of this section, improperly generated RINs may be used for compliance provided that all of the following conditions and requirements are satisfied and the renewable fuel producer or importer who improperly generated the RINs demonstrates that the conditions and requirements are satisfied through

the reporting and recordkeeping requirements set forth below, that:

(1) The number of RINs generated for a batch exceeds the number of RINs that should have been properly generated.

(2) The RINs were improperly generated as a result of a broken meter, an inadvertent temperature correction error, or an inadvertent administrative error.

(3) The renewable fuel producer or importer had in place at the time the RINs were improperly generated a quality assurance/quality control plan designed to ensure that process measuring equipment such as meters and temperature probes are properly maintained and to prevent inadvertent administrative errors.

(4) The renewable fuel producer or importer has taken any appropriate additional steps to prevent similar violations from occurring in the future.

(5) The improperly generated RINs have been transferred to another party.

(6) The renewable fuel producer or importer has not improperly generated RINs for the reasons described in paragraph (c)(2) of this section on more than five batches during any calendar year.

(7) All of the following remedial actions have been implemented within 30 days of the EMTS submission date of the improper RIN generation:

(i) The renewable fuel producer or importer retires an equal number of valid RINs with the same D Code and RIN year as the properly generated RINs, using an EMTS retire code of 110.

(ii) The renewable fuel producer or importer reports all the following information to EPA via EMTS, which EPA may make publicly available:

(A) Company name.

(B) Company ID.

(C) Facility name.

(D) Facility ID.

(E) The date the renewable fuel was produced.

(F) The date the RINs were originally generated.

(G) The number of RINs generated.

(H) The number of RINs improperly generated.

(I) RIN year.

(J) D codes of generated RINs.

(K) Batch numbers.

(L) EMTS Transaction ID of the original generation.

(M) An explanation of how the violation occurred, and why the improperly generated RINs meet the criteria in paragraph (c)(2) of this section.

(N) Steps taken to prevent similar violations from occurring in the future.

(O) Information under paragraphs (c)(3), (c)(4), and (c)(5) of this section.

(P) Any additional information the Administrator may require.

(8) The renewable fuel producer or importer maintains all records relating to the improper RIN generation and the associated remedial actions taken, including but not limited to any of the following:

(i) All information regarding the generation of invalid RINs, including information that is sufficient to demonstrate that the improperly generated RINs meet the criteria in paragraph (c)(2) of this section.

(ii) Documents demonstrating that the renewable fuel producer or importer has implemented the quality control/quality assurance plan required in paragraph (c)(3) of this section, and has taken all appropriate additional steps to prevent similar violations from occurring in the future.

(iii) All correspondence with EPA.

(iv) All EMTS transactions (Generation, Buy, Sell and Retire).

(v) All Product Transfer Documents (PTDs).

(d) If EPA determines that a renewable fuel producer improperly generated RINs but did not meet the requirements set forth in paragraph (c) of this section, then the requirements of paragraph (b) of this section apply from the moment that the invalid RINs were generated in EMTS. Once the RIN generator has identified improperly generated RINs to EPA, then EPA may remove these improperly generated RINs from EMTS.

[75 FR 14863, Mar. 26, 2010, as amended at 77 FR 1355, Jan. 9, 2012]

§ 80.1432 Reported spillage or disposal of renewable fuel.

(a) A reported spillage or disposal under this subpart means a spillage or disposal of renewable fuel associated with a requirement by a federal, state,

or local authority to report the spillage or disposal.

(b) Except as provided in paragraph (c) of this section, in the event of a reported spillage or disposal of any volume of renewable fuel, the owner of the renewable fuel must retire a number of RINs corresponding to the volume of spilled or disposed of renewable fuel multiplied by its equivalence value.

(1) If the equivalence value for the spilled or disposed of volume may be determined pursuant to § 80.1415 based on its composition, then the appropriate equivalence value shall be used.

(2) If the equivalence value for a spilled or disposed of volume of renewable fuel cannot be determined, the equivalence value shall be 1.0.

(c) If the owner of a volume of renewable fuel that is spilled or disposed of and reported establishes that no RINs were generated to represent the volume, then no RINs shall be retired.

(d) A RIN that is retired under paragraph (b) of this section:

(1) Must be reported as a retired RIN in the applicable reports under § 80.1451.

(2) May not be transferred to another person or used by any obligated party to demonstrate compliance with the party's Renewable Volume Obligations.

§§ 80.1433–80.1439 [Reserved]

§ 80.1440 What are the provisions for blenders who handle and blend less than 125,000 gallons of renewable fuel per year?

(a) Renewable fuel blenders who handle and blend less than 125,000 gallons of renewable fuel per year, and who do not have Renewable Volume Obligations, are permitted to delegate their RIN-related responsibilities to the party directly upstream of them who supplied the renewable fuel for blending.

(b) The RIN-related responsibilities that may be delegated directly upstream include all of the following:

(1) The RIN separation requirements of § 80.1429.

(2) The reporting requirements of § 80.1451.

(3) The recordkeeping requirements of § 80.1454.

(4) The attest engagement requirements of § 80.1464.

(c) For upstream delegation of RIN-related responsibilities, both parties must agree on the delegation, and a quarterly written statement signed by both parties must be included with the reporting party's reports under § 80.1451.

(1) Both parties must keep copies of the signed quarterly written statement agreeing to the upward delegation for 5 years.

(2) Parties delegating their RIN responsibilities upward shall keep copies of their registration forms as submitted to EPA.

(3) A renewable fuel blender who delegates its RIN-related responsibilities under this section will remain liable for any violation of this subpart M associated with its renewable fuel blending activities.

(d) Renewable fuel blenders who handle and blend less than 125,000 gallons of renewable fuel per year and delegate their RIN-related responsibilities under paragraph (b) of this section must register pursuant to § 80.1450(e), and may not own RINs.

(e) Renewable fuel blenders who handle and blend less than 125,000 gallons of renewable fuel per year and who do not opt to delegate their RIN-related responsibilities, or own RINs, will be subject to all requirements stated in paragraph (b) of this section, and all other applicable requirements of this subpart M.

[75 FR 14863, Mar. 26, 2010, as amended at 75 FR 26042, May 10, 2010]

§ 80.1441 Small refinery exemption.

(a)(1) Transportation fuel produced at a refinery by a refiner, or foreign refiner (as defined at § 80.1465(a)), is exempt from January 1, 2010 through December 31, 2010 from the renewable fuel standards of § 80.1405, and the owner or operator of the refinery, or foreign refinery, is exempt from the requirements that apply to obligated parties under this subpart M for fuel produced at the refinery if the refinery meets the definition of a small refinery under § 80.1401 for calendar year 2006.

(2) The exemption of paragraph (a)(1) of this section shall apply unless a refiner chooses to waive this exemption (as described in paragraph (f) of this section), or the exemption is extended

(as described in paragraph (e) of this section).

(3) For the purposes of this section, the term ''refiner'' shall include foreign refiners.

(4) This exemption shall only apply to refineries that process crude oil through refinery processing units.

(5) The small refinery exemption is effective immediately, except as specified in paragraph (b)(3) of this section.

(6) Refiners who own refineries that qualified as small under 40 CFR 80.1141 do not need to resubmit a small refinery verification letter under this subpart M. This paragraph (a) does not supersede § 80.1141.

(b)(1) A refiner owning a small refinery must submit a verification letter to EPA containing all of the following information:

(i) The annual average aggregate daily crude oil throughput for the period January 1, 2006 through December 31, 2006 (as determined by dividing the aggregate throughput for the calendar year by the number 365).

(ii) A letter signed by the president, chief operating or chief executive officer of the company, or his/her designee, stating that the information contained in the letter is true to the best of his/her knowledge, and that the refinery was small as of December 31, 2006.

(iii) Name, address, phone number, facsimile number, and e-mail address of a corporate contact person.

(2) Verification letters must be submitted by July 1, 2010 to one of the addresses listed in paragraph (h) of this section.

(3) For foreign refiners the small refinery exemption shall be effective upon approval, by EPA, of a small refinery application. The application must contain all of the elements required for small refinery verification letters (as specified in paragraph (b)(1) of this section), must satisfy the provisions of § 80.1465(f) through (i) and (o), and must be submitted by July 1, 2010 to one of the addresses listed in paragraph (h) of this section.

(4) Small refinery verification letters are not required for those refiners who have already submitted a complete verification letter under subpart K of this part 80. Verification letters submitted under subpart K prior to July 1, 2010 that satisfy the requirements of subpart K shall be deemed to satisfy the requirements for verification letters under this subpart M.

(c) If EPA finds that a refiner provided false or inaccurate information regarding a refinery's crude throughput (pursuant to paragraph (b)(1)(i) of this section) in its small refinery verification letter, the exemption will be void as of the effective date of these regulations.

(d) If a refiner is complying on an aggregate basis for multiple refineries, any such refiner may exclude from the calculation of its Renewable Volume Obligations (under § 80.1407) transportation fuel from any refinery receiving the small refinery exemption under paragraph (a) of this section.

(e)(1) The exemption period in paragraph (a) of this section shall be extended by the Administrator for a period of not less than two additional years if a study by the Secretary of Energy determines that compliance with the requirements of this subpart would impose a disproportionate economic hardship on a small refinery.

(2) A refiner may petition the Administrator for an extension of its small refinery exemption, based on disproportionate economic hardship, at any time.

(i) A petition for an extension of the small refinery exemption must specify the factors that demonstrate a disproportionate economic hardship and must provide a detailed discussion regarding the hardship the refinery would face in producing transportation fuel meeting the requirements of § 80.1405 and the date the refiner anticipates that compliance with the requirements can reasonably be achieved at the small refinery.

(ii) The Administrator shall act on such a petition not later than 90 days after the date of receipt of the petition.

(f) At any time, a refiner with a small refinery exemption under paragraph (a) of this section may waive that exemption upon notification to EPA.

(1) A refiner's notice to EPA that it intends to waive its small refinery exemption must be received by November 1 to be effective in the next compliance year.

(2) The waiver will be effective beginning on January 1 of the following calendar year, at which point the transportation fuel produced at that refinery will be subject to the renewable fuels standard of § 80.1405 and the owner or operator of the refinery shall be subject to all other requirements that apply to obligated parties under this subpart M.

(3) The waiver notice must be sent to EPA at one of the addresses listed in paragraph (h) of this section.

(g) A refiner that acquires a refinery from either an approved small refiner (as defined under § 80.1442(a)) or another refiner with an approved small refinery exemption under paragraph (a) of this section shall notify EPA in writing no later than 20 days following the acquisition.

(h) Verification letters under paragraph (b) of this section, petitions for small refinery hardship extensions under paragraph (e) of this section, and small refinery exemption waiver notices under paragraph (f) of this section shall be sent to one of the following addresses:

(1) *For US mail:* U.S. EPA, *Attn:* RFS Program, 6406J, 1200 Pennsylvania Avenue, NW., Washington, DC 20460.

(2) *For overnight or courier services:* U.S. EPA, *Attn:* RFS Program, 6406J, 1310 L Street, NW., 6th floor, Washington, DC 20005. (202) 343–9038.

§ 80.1442 What are the provisions for small refiners under the RFS program?

(a)(1) To qualify as a small refiner under this section, a refiner must meet all of the following criteria:

(i) The refiner produced transportation fuel at its refineries by processing crude oil through refinery processing units from January 1, 2006 through December 31, 2006.

(ii) The refiner employed an average of no more than 1,500 people, based on the average number of employees for all pay periods for calendar year 2006 for all subsidiary companies, all parent companies, all subsidiaries of the parent companies, and all joint venture partners.

(iii) The refiner had a corporate-average crude oil capacity less than or equal to 155,000 barrels per calendar day (bpcd) for 2006.

(2) For the purposes of this section, the term ''refiner'' shall include foreign refiners.

(3) Refiners who qualified as small under 40 CFR 80.1142 do not need to reapply for small refiner status under this subpart M. This paragraph (a) does not supersede § 80.1142.

(b)(1) The small refiner exemption in paragraph (c) of this section is effective immediately, except as provided in paragraph (b)(5) of this section, provided that all requirements of this section are satisfied.

(2) Refiners who qualify for the small refiner exemption under paragraph (a) of this section must submit a verification letter (and any other relevant information) to EPA by July 1, 2010. The small refiner verification letter must include all of the following information for the refiner and for all subsidiary companies, all parent companies, all subsidiaries of the parent companies, and all joint venture partners:

(i) A listing of the name and address of each company location where any employee worked for the period January 1, 2006 through December 31, 2006.

(ii) The average number of employees at each location based on the number of employees for each pay period for the period January 1, 2006 through December 31, 2006.

(iii) The type of business activities carried out at each location.

(iv) For joint ventures, the total number of employees includes the combined employee count of all corporate entities in the venture.

(v) For government-owned refiners, the total employee count includes all government employees.

(vi) The total corporate crude oil capacity of each refinery as reported to the Energy Information Administration (EIA) of the U.S. Department of Energy (DOE), for the period January 1, 2006 through December 31, 2006. The information submitted to EIA is presumed to be correct. In cases where a company disagrees with this information, the company may petition EPA with appropriate data to correct the record when the company submits its application.

(vii) The verification letter must be signed by the president, chief operating or chief executive officer of the company, or his/her designee, stating that the information is true to the best of his/her knowledge, and that the company owned the refinery as of December 31, 2006.

(viii) Name, address, phone number, facsimile number, and e-mail address of a corporate contact person.

(3) In the case of a refiner who acquires or reactivates a refinery that was shutdown or non-operational between January 1, 2005 and January 1, 2006, the information required in paragraph (b)(2) of this section must be provided for the time period since the refiner acquired or reactivated the refinery.

(4) [Reserved]

(5) For foreign refiners the small refiner exemption shall be effective upon approval, by EPA, of a small refiner application. The application must contain all of the elements required for small refiner verification letters (as specified in paragraph (b)(2) of this section), must satisfy the provisions of § 80.1465(f) through (h) and (o), must demonstrate compliance with the crude oil capacity criterion of paragraph (a)(1)(iii) of this section, and must be submitted by July 1, 2010 to one of the addresses listed in paragraph (i) of this section.

(6) Small refiner verification letters submitted under subpart K (§ 80.1142) prior to July 1, 2010 that satisfy the requirements of subpart K shall be deemed to satisfy the requirements for small refiner verification letters under this subpart M.

(c) *Small refiner temporary exemption*—(1) Transportation fuel produced by an small refiner pursuant to paragraph (b)(1) of this section, or an approved foreign small refiner (as defined at § 80.1465(a)), is exempt from January 1, 2010 through December 31, 2010 from the renewable fuel standards of § 80.1405 and the requirements that apply to obligated parties under this subpart if the refiner or foreign refiner meets all the criteria of paragraph (a)(1) of this section.

(2) The small refiner exemption shall apply to a small refiner pursuant to paragraph (b)(1) of this section or an approved foreign small refiner unless that refiner chooses to waive this exemption (as described in paragraph (d) of this section).

(d)(1) A refiner may, at any time, waive the small refiner exemption under paragraph (c) of this section upon notification to EPA.

(2) A refiner's notice to EPA that it intends to waive the small refiner exemption must be received by November 1 of a given year in order for the waiver to be effective for the following calendar year. The waiver will be effective beginning on January 1 of the following calendar year, at which point the refiner will be subject to the renewable fuel standards of § 80.1405 and the requirements that apply to obligated parties under this subpart.

(3) The waiver must be sent to EPA at one of the addresses listed in paragraph (i) of this section.

(e) Refiners who qualify as small refiners under this section and subsequently fail to meet all of the qualifying criteria as set out in paragraph (a) of this section are disqualified as small refiners of January 1 of the next calendar year, except as provided under paragraphs (d) and (e)(2) of this section.

(1) In the event such disqualification occurs, the refiner shall notify EPA in writing no later than 20 days following the disqualifying event.

(2) Disqualification under this paragraph (e) shall not apply in the case of a merger between two approved small refiners.

(f) If EPA finds that a refiner provided false or inaccurate information in its small refiner status verification letter under this subpart M, the refiner will be disqualified as a small refiner as of the effective date of this subpart.

(g) Any refiner that acquires a refinery from another refiner with approved small refiner status under paragraph (a) of this section shall notify EPA in writing no later than 20 days following the acquisition.

(h) *Extensions of the small refiner temporary exemption*.—(1) A small refiner may apply for an extension of the temporary exemption of paragraph (c)(1) of this section based on a showing of all the following:

(i) Circumstances exist that impose disproportionate economic hardship on

the refiner and significantly affects the refiner's ability to comply with the RFS standards.

(ii) The refiner has made best efforts to comply with the requirements of this subpart.

(2) A refiner must apply, and be approved, for small refiner status under this section.

(3) A small refiner's hardship application must include all the following information:

(i) A plan demonstrating how the refiner will comply with the requirements of § 80.1405 (and all other requirements of this subpart applicable to obligated parties), as expeditiously as possible.

(ii) A detailed description of the refinery configuration and operations including, at a minimum, all the following information:

(A) The refinery's total crude capacity.

(B) Total crude capacity of any other refineries owned by the same entity.

(C) Total volume of gasoline and diesel produced at the refinery.

(D) Detailed descriptions of efforts to comply.

(E) Bond rating of the entity that owns the refinery.

(F) Estimated investment needed to comply with the requirements of this subpart M.

(4) A small refiner shall notify EPA in writing of any changes to its situation between approval of the extension application and the end of its approved extension period.

(5) EPA may impose reasonable conditions on extensions of the temporary exemption, including reducing the length of such an extension, if conditions or situations change between approval of the application and the end of the approved extension period.

(i) Small refiner status verification letters, small refiner exemption waivers, or applications for extensions of the small refiner temporary exemption under this section must be sent to one of the following addresses:

(1) *For US Mail:* U.S. EPA, *Attn:* RFS Program, 6406J, 1200 Pennsylvania Avenue, NW., Washington, DC 20460.

(2) *For overnight or courier services:* U.S. EPA, *Attn:* RFS Program, 6406J, 1310 L Street, NW., 6th floor, Washington, DC 20005. (202) 343–9038.

[75 FR 14863, Mar. 26, 2010, as amended at 75 FR 26042, May 10, 2010]

§ 80.1443 What are the opt-in provisions for noncontiguous states and territories?

(a) Alaska or a United States territory may petition the Administrator to opt-in to the program requirements of this subpart.

(b) The Administrator will approve the petition if it meets the provisions of paragraphs (c) and (d) of this section.

(c) The petition must be signed by the Governor of the state or his authorized representative (or the equivalent official of the territory).

(d)(1) A petition submitted under this section must be received by EPA by November 1 for the state or territory to be included in the RFS program in the next calendar year.

(2) A petition submitted under this section should be sent to either of the following addresses:

(i) *For US Mail:* U.S. EPA, *Attn:* RFS Program, 6406J, 1200 Pennsylvania Avenue, NW., Washington, DC 20460.

(ii) *For overnight or courier services:* U.S. EPA, *Attn:* RFS Program, 6406J, 1310 L Street, NW., 6th floor, Washington, DC 20005. (202) 343–9038.

(e) Upon approval of the petition by the Administrator:

(1) EPA shall calculate the standards for the following year, including the total gasoline and diesel fuel volume for the state or territory in question.

(2) Beginning on January 1 of the next calendar year, all gasoline and diesel fuel refiners and importers in the state or territory for which a petition has been approved shall be obligated parties as defined in § 80.1406.

(3) Beginning on January 1 of the next calendar year, all renewable fuel producers in the state or territory for which a petition has been approved shall, pursuant to § 80.1426(a)(2), be required to generate RINs and comply with other requirements of this subpart M that are applicable to producers of renewable fuel.

§§ 80.1444–80.1448 [Reserved]

§ 80.1449 What are the Production Outlook Report requirements?

(a) By June 1 of each year (September 1 for the report due in 2010), a registered renewable fuel producer or importer must submit and an unregistered renewable fuel producer may submit all of the following information for each of its facilities, as applicable, to EPA:

(1) The type, or types, of renewable fuel expected to be produced or imported at each facility owned by the renewable fuel producer or importer.

(2) The volume of each type of renewable fuel expected to be produced or imported at each facility.

(3) The number of RINs expected to be generated by the renewable fuel producer or importer for each type of renewable fuel.

(4) Information about all the following:

(i) Existing and planned production capacity.

(ii) Long-range plans for expansion of production capacity at existing facilities or construction of new facilities.

(iii) Feedstocks and production processes to be used at each production facility.

(iv) Changes to the facility that would raise or lower emissions of any greenhouse gases from the facility.

(5) For expanded production capacity that is planned or underway at each existing facility, or new production facilities that are planned or underway, information on all the following, as available:

(i) Strategic planning.

(ii) Planning and front-end engineering.

(iii) Detailed engineering and permitting.

(iv) Procurement and construction.

(v) Commissioning and startup.

(6) Whether capital commitments have been made or are projected to be made.

(b) The information listed in paragraph (a) of this section shall include the reporting party's best estimates for the five following calendar years.

(c) Production outlook reports must provide an update of the progress in each of the areas listed in paragraph (a) of this section in comparison to information provided in previous year production outlook reports.

(d) Production outlook reports shall be sent to one of the following addresses:

(1) *For U.S. Mail:* U.S. EPA, *Attn:* RFS Program—Production Outlook Reports, 6406J, 1200 Pennsylvania Avenue, NW., Washington, DC 20460.

(2) *For overnight or courier services:* U.S. EPA, *Attn:* RFS Program—Production Outlook Reports, 6406J, 1310 L Street, NW., 6th floor, Washington, DC 20005; (202) 343–9038.

(e) All production outlook reports required under this section shall be submitted on forms and following procedures prescribed by the Administrator.

[75 FR 14863, Mar. 26, 2010, as amended at 77 FR 1356, Jan. 9, 2012]

§ 80.1450 What are the registration requirements under the RFS program?

(a) *Obligated parties and exporters.* Any obligated party described in § 80.1406, and any exporter of renewable fuel described in § 80.1430, must provide EPA with the information specified for registration under § 80.76, if such information has not already been provided under the provisions of this part. An obligated party or an exporter of renewable fuel must receive EPA-issued identification numbers prior to engaging in any transaction involving RINs. Registration information may be submitted to EPA at any time after publication of this rule in the FEDERAL REGISTER, but must be submitted and accepted by EPA by July 1, 2010, or 60 days prior to RIN ownership, whichever date comes later.

(b) *Producers.* Any RIN-generating foreign or domestic producer of renewable fuel, any foreign renewable fuel producer that sells renewable fuel for RIN generation by a United States importer, or any foreign ethanol producer that produces ethanol used in renewable fuel for which RINs are generated by a United States importer, must provide EPA the information specified under § 80.76 if such information has not already been provided under the provisions of this part, and must receive EPA-issued company and facility identification numbers prior to the

generation of any RINs for their fuel or for fuel made with their ethanol. Unless otherwise specifically indicated, all the following registration information must be submitted and accepted by EPA by July 1, 2010, or 60 days prior to the generation of RINs, whichever date comes later, subject to this subpart:

(1) A description of the types of renewable fuels or ethanol that the producer intends to produce at the facility and that the facility is capable of producing without significant modifications to the existing facility. For each type of renewable fuel or ethanol, the renewable fuel producer or foreign ethanol producer shall also provide all the following:

(i) A list of all the feedstocks the facility is capable of utilizing without significant modification to the existing facility.

(ii) A description of the facility's renewable fuel or ethanol production processes.

(iii) The type of co-products produced with each type of renewable fuel or ethanol.

(iv) A process heat fuel supply plan that includes all of the following:

(A) For all process heat fuel, provide all the following information:

(*1*) Each type of process heat fuel used at the facility.

(*2*) Name and address of the company supplying each process heat fuel to the renewable fuel or foreign ethanol facility.

(B) For biogas used for process heat, provide all the following information:

(*1*) Locations from which the biogas was produced or extracted.

(*2*) Name of suppliers of all biogas the producer purchases for use for process heat in the facility.

(*3*) An affidavit from the biogas supplier stating its intent to supply biogas to the renewable fuel producer or foreign ethanol producer, and the quantity and energy content of the biogas that it intends to provide to the renewable fuel producer or foreign ethanol producer.

(v) The following records that support the facility's baseline volume as defined in § 80.1401 or, for foreign ethanol facilities, their production volume:

(A) For all facilities except those described in paragraph (b)(1)(v)(B) of this section, copies of the most recent applicable air permits issued by the U.S. Environmental Protection Agency, state, local air pollution control agencies, or foreign governmental agencies and that govern the construction and/or operation of the renewable fuel or foreign ethanol facility.

(B) For facilities claiming the exemption described in § 80.1403(c) or (d), applicable air permits issued by the U.S. Environmental Protection Agency, state, local air pollution control agencies, or foreign governmental agencies that govern the construction and/or operation of the renewable fuel facility that were:

(*1*) Issued or revised no later than December 19, 2007, for facilities described in § 80.1403(c); or

(*2*) Issued or revised no later than December 31, 2009, for facilities described in § 80.1403(d).

(C) For all facilities, copies of documents demonstrating each facility's actual peak capacity as defined in § 80.1401 if the maximum rated annual volume output of renewable fuel is not specified in the air permits specified in paragraphs (b)(1)(v)(A) and (b)(1)(v)(B) of this section, as appropriate.

(D) Such other records as may be requested by the Administrator.

(vi) For facilities claiming the exemption described in § 80.1403(c) or (d), evidence demonstrating the date that construction commenced (as defined in § 80.1403(a)(1)) including all of the following:

(A) Contracts with construction and other companies.

(B) Applicable air permits issued by the U.S. Environmental Protection Agency, state, local air pollution control agencies, or foreign governmental agencies that governed the construction and/or operation of the renewable fuel facility during construction and when first operated.

(vii)(A) For a producer of renewable fuel or a foreign producer of ethanol made from separated yard waste per § 80.1426(f)(5)(i)(A):

(*1*) The location of any municipal waste facility or other facility from which the waste stream consisting

solely of separated yard waste is collected; and

(*2*) A plan documenting how the waste will be collected and how the renewable fuel producer or foreign ethanol producer will conduct ongoing verification that such waste consists only of yard waste (and incidental other components such as paper and plastics) that is kept separate since generation from other waste materials.

(B) For a producer of renewable fuel or a foreign producer of ethanol made from separated food waste per § 80.1426(f)(5)(i)(B):

(*1*) The location of any municipal waste facility or other facility from which the waste stream consisting solely of separated food waste is collected; and

(*2*) A plan documenting how the waste will be collected, how the cellulosic and non-cellulosic portions of the waste will be quantified, and for ongoing verification that such waste consists only of food waste (and incidental other components such as paper and plastics) that is kept separate since generation from other waste materials.

(viii) For a producer of renewable fuel, or a foreign producer of ethanol, made from separated municipal solid waste per § 80.1426(f)(5)(i)(C):

(A) The location of the municipal waste facility from which the separated municipal solid waste is collected or from which material is collected that will be processed to produce separated municipal solid waste.

(B) A plan providing ongoing verification that there is separation of recyclable paper, cardboard, plastics, rubber, textiles, metals, and glass wastes to the extent reasonably practicable and which documents the following:

(*1*) Extent and nature of recycling that occurred prior to receipt of the waste material by the renewable fuel producer or foreign ethanol producer;

(*2*) Identification of available recycling technology and practices that are appropriate for removing recycling materials from the waste stream by the fuel producer or foreign ethanol producer; and

(*3*) Identification of the technology or practices selected for implementation by the fuel producer or foreign ethanol producer including an explanation for such selection, and reasons why other technologies or practices were not.

(C) Contracts relevant to materials recycled from municipal waste streams as described in § 80.1426(f)(5)(iii).

(D) Certification by the producer that recycling is conducted in a manner consistent with goals and requirements of applicable State and local laws relating to recycling and waste management.

(ix)(A) For a producer of ethanol from grain sorghum or a foreign ethanol producer making product from grain sorghum and seeking to have it sold as renewable fuel after addition of denaturant, provide a plan that has been submitted and accepted by U.S. EPA that includes the following information:

(*1*) Locations from which the biogas used at the facility was produced or extracted.

(*2*) Name of suppliers of all biogas used at the facility.

(*3*) An affidavit from each biogas supplier stating its intent to supply biogas to the renewable fuel producer or foreign ethanol producer, the quantity and energy content of the biogas that it intends to provide to the renewable fuel producer or foreign ethanol producer, and that the biogas will be derived solely from landfills, waste treatment plants, and/or waste digesters.

(*4*) If the producer intends to generate advanced biofuel RINs, estimates of the total amount of electricity used from the grid, the total amount of ethanol produced, and a calculation of the amount of electricity used from the grid per gallon of ethanol produced.

(*5*) If the producer intends to generate advanced biofuel RINs, a description of how the facility intends to demonstrate and document that not more than 0.15 kWh of grid electricity is used per gallon of ethanol produced, calculated on a per batch basis, at the time of RIN generation.

(B) [Reserved]

(2) An independent third-party engineering review and written report and verification of the information provided pursuant to paragraph (b)(1) of this section. The report and verification shall be based upon a site visit and review of relevant documents

and shall separately identify each item required by paragraph (b)(1) of this section, describe how the independent third-party evaluated the accuracy of the information provided, state whether the independent third-party agrees with the information provided, and identify any exceptions between the independent third-party's findings and the information provided.

(i) The verifications required under this section must be conducted by a professional engineer, as specified in paragraphs (b)(2)(i)(A) and (b)(2)(i)(B) of this section, who is an independent third-party. The verifying engineer must be:

(A) For a domestic renewable fuel production facility or a foreign ethanol production facility, a professional engineer who is licensed by an appropriate state agency in the United States, with professional work experience in the chemical engineering field or related to renewable fuel production.

(B) For a foreign renewable fuel production facility, an engineer who is a foreign equivalent to a professional engineer licensed in the United States with professional work experience in the chemical engineering field or related to renewable fuel production.

(ii) To be considered an independent third-party under this paragraph (b)(2):

(A) The third-party shall not be operated by the renewable fuel producer or foreign ethanol producer, or any subsidiary or employee of the renewable fuel producer or foreign ethanol producer.

(B) The third-party shall be free from any interest in the renewable fuel producer or foreign ethanol producer's business.

(C) The renewable fuel producer or foreign ethanol producer shall be free from any interest in the third-party's business.

(D) Use of a third-party that is debarred, suspended, or proposed for debarment pursuant to the Government-wide Debarment and Suspension regulations, 40 CFR part 32, or the Debarment, Suspension and Ineligibility provisions of the Federal Acquisition Regulations, 48 CFR, part 9, subpart 9.4, shall be deemed noncompliance with the requirements of this section.

(iii) The independent third-party shall retain all records pertaining to the verification required under this section for a period of five years from the date of creation and shall deliver such records to the Administrator upon request.

(iv) The renewable fuel producer or foreign ethanol producer must retain records of the review and verification, as required in § 80.1454(b)(6).

(v) The third-party must provide to EPA documentation of his or her qualifications as part of the engineering review, including proof of appropriate professional license or foreign equivalent.

(vi) Owners and operators of facilities described in § 80.1403(c) and (d) must submit the engineering review no later than December 31, 2010.

(c) *Importers*. Importers of renewable fuel must provide EPA the information specified under § 80.76, if such information has not already been provided under the provisions of this part and must receive an EPA-issued company identification number prior to generating or owning RINs. Registration information must be submitted and accepted by EPA by July 1, 2010, or 60 days prior to an importer importing any renewable fuel with assigned RINs or generating any RINs for renewable fuel, whichever dates comes later.

(d) *Registration updates*. (1) Any producer of renewable fuel, and any foreign ethanol producer who makes changes to his facility that will allow him to produce renewable fuel, as defined in § 80.1401 that is not reflected in the producer's registration information on file with EPA must update his registration information and submit a copy of an updated independent third-party engineering review on file with EPA at least 60 days prior to producing the new type of renewable fuel. The producer may also submit an addendum to the independent third-party engineering review on file with EPA provided the addendum meets all the requirements in paragraph (b)(2) of this section and verifies for EPA the most up-to-date information at the producer's existing facility.

(2) Any producer of renewable fuel and any foreign ethanol producer who makes any other changes to a facility

that will affect the producer's registration information but will not affect the renewable fuel category for which the producer is registered per paragraph (b) of this section must update his registration information 7 days prior to the change.

(3) All producers of renewable fuel and foreign ethanol producers must update registration information and submit an updated independent third-party engineering review according to the schedule in paragraph (d)(3)(i) or (d)(3)(ii) of this section, and including the information specified in paragraph (d)(3)(iii) of this section:

(i) For all producers of renewable fuel and foreign ethanol producers registered in calendar year 2010, the updated registration information and independent third-party engineering review shall be submitted to EPA by January 31, 2013, and by January 31 of every third calendar year thereafter; or

(ii) For all producers of renewable fuel and foreign ethanol producers registered in any calendar year after 2010, the updated registration information and independent third-party engineering review shall be submitted to EPA by January 31 of every third calendar year after the first year of registration.

(iii) In addition to conducting the engineering review and written report and verification required by paragraph (b)(2) of this section, the updated independent third-party engineering review shall include a detailed review of the renewable fuel producer's calculations used to determine V_{RIN} of a representative sample of batches of each type of renewable fuel produced since the last registration. The representative sample shall be selected in accordance with the sample size guidelines set forth at § 80.127.

(e) Any party who owns RINs, intends to own RINs, or intends to allow another party to separate RINs as per § 80.1440, but who is not covered by paragraph (a), (b), or (c) of this section, must provide EPA the information specified under § 80.76, if such information has not already been provided under the provisions of this part and must receive an EPA-issued company identification number prior to owning any RINs. Registration information must be submitted at least 30 days prior to RIN ownership.

(f) Registration for any facility claiming an exemption under § 80.1403(c) or (d), must be submitted by July 1, 2013. EPA may in its sole discretion waive this requirement if it determines that the information submitted in any later registration can be verified by EPA in the same manner as would have been possible with a timely submission.

(g) Registration shall be on forms, and following policies, established by the Administrator.

[75 FR 14863, Mar. 26, 2010, as amended at 75 FR 26043, May 10, 2010; 77 FR 1356, Jan. 9, 2012; 77 FR 74606, Dec. 17, 2012]

§ 80.1451 What are the reporting requirements under the RFS program?

(a) *Obligated parties and exporters.* Any obligated party described in § 80.1406 or exporter of renewable fuel described in § 80.1430 must submit to EPA reports according to the schedule, and containing all the information, that is set forth in this paragraph (a).

(1) Annual compliance reports for the previous compliance period shall be submitted by February 28 of each year and shall include all of the following information:

(i) The obligated party's or exporter's name.

(ii) The EPA company registration number.

(iii) Whether the domestic refiner, as defined in § 80.1406, is complying on a corporate (aggregate) or facility-by-facility basis.

(iv) The EPA facility registration number, if complying on a facility-by-facility basis.

(v) The production volume and import volume of all of the products listed in § 80.1407(c) and (e) for the reporting year.

(vi) The RVOs, as defined in § 80.1427(a) for obligated parties and § 80.1430(b) for exporters of renewable fuel, for the reporting year.

(vii) Any deficit RVOs carried over from the previous year.

(viii) The total current-year RINs by category of renewable fuel, as those

fuels are defined in § 80.1401 (i.e., cellulosic biofuel, biomass-based diesel, advanced biofuel, renewable fuel, and cellulosic diesel), retired for compliance.

(ix) The total prior-year RINs by renewable fuel category, as those fuels are defined in § 80.1401, retired for compliance.

(x) The total cellulosic biofuel waiver credits used to meet the party's cellulosic biofuel RVO.

(xi) A list of all RINs generated prior to July 1, 2010 that were retired for compliance in the reporting period.

(xii) Any deficit RVO(s) carried into the subsequent year.

(xiii) Any additional information that the Administrator may require.

(2) The RIN transaction reports required under paragraph (c)(1) of this section.

(3) The quarterly RIN activity reports required under paragraph (c)(2) of this section.

(4) Reports required under this paragraph (a) must be signed and certified as meeting all the applicable requirements of this subpart by the owner or a responsible corporate officer of the obligated party or exporter.

(b) *Renewable fuel producers (domestic and foreign) and importers.* Any domestic producer or importer of renewable fuel who generates RINs, or foreign renewable fuel producer who generates RINs, must submit to EPA reports according to the schedule, and containing all the information, that is set forth in this paragraph (b).

(1)(i) For RINs generated beginning on July 1, 2010, RIN generation reports for each facility owned by the renewable fuel producer or importer shall be submitted according to the schedule specified in paragraph (f)(2) of this section.

(ii) The RIN generation reports shall include all the following information for each batch of renewable fuel produced or imported, where ''batch'' means a discrete quantity of renewable fuel produced or imported and assigned a unique batch-RIN per § 80.1426(d):

(A) The RIN generator's name.

(B) The RIN generator's EPA company registration number.

(C) The renewable fuel producer EPA facility registration number.

(D) The importer EPA facility registration number and foreign renewable producer company registration number, if applicable.

(E) The applicable reporting period.

(F) The quantity of RINs generated for each batch according to § 80.1426.

(G) The production date of each batch.

(H) The fuel type of each batch.

(I) The volume of denaturant and applicable equivalence value of each batch.

(J) The volume of each batch produced.

(K) The types and quantities of feedstocks used.

(L) The process(es) and feedstock(s) used and proportion of renewable volume attributable to each process and feedstock.

(M) The type of co-products produced with each batch.

(N) The quantity of co-products produced in each quarter.

(O) A list of the RINs generated and an affirmation that the feedstock(s) used for each batch meets the definition of renewable biomass as defined in § 80.1401.

(P) Producers of renewable electricity and producers or importers of biogas used for transportation as described in § 80.1426(f)(10) and (11), shall report all of the following:

(*1*) The total energy produced and supplied for use as a transportation fuel, in units of energy (for example, MMBtu or MW) based on metering of gas volume or electricity.

(*2*) The name and location of where the fuel is sold for use as a transportation fuel.

(Q) Producers or importers of renewable fuel produced at facilities that use biogas for process heat as described in § 80.1426(f)(12), shall report the total energy supplied to the renewable fuel facility, in MMBtu based on metering of gas volume.

(R) Producers or importers of renewable fuel made from separated municipal solid waste as described in § 80.1426(f)(5)(i)(C), shall report the amount of paper, cardboard, plastics, rubber, textiles, metals, and glass separated from municipal solid waste for recycling. Reporting shall be in units of weight (in tons).

(S) Producers of advanced biofuel using grain sorghum shall report all of the following:

(*1*) The total amount of electricity that is purchased from the grid and used at the site, based on metering, in kWh.

(*2*) Total amount of ethanol produced.

(*3*) Calculation of the amount of grid electricity used at the site per gallon of ethanol produced in each batch.

(*4*) Each batch number as specified in § 80.1452(b).

(*5*) Reference ID for documents required by § 80.1454(k)(2)(D).

(T) Any additional information the Administrator may require.

(2) The RIN transaction reports required under paragraph (c)(1) of this section.

(3) The RIN activity reports required under paragraph (c)(2) of this section.

(4) Reports required under this paragraph (b) must be signed and certified as meeting all the applicable requirements of this subpart by the owner or a responsible corporate officer of the renewable fuel producer or importer.

(c) *All RIN-owning parties*. Any party, including any party specified in paragraphs (a) and (b) of this section, that owns RINs during a reporting period, must submit reports to EPA according to the schedule, and containing all the information, that is set forth in this paragraph (c).

(1)(i) For RIN transactions beginning on July 1, 2010, RIN transaction reports listing each RIN transaction shall be submitted according to the schedule in paragraph (f)(2) of this section.

(ii) As per § 80.1452, RIN transaction information listing each RIN transaction shall be submitted to the EMTS.

(iii) Each report required by paragraph (c)(1)(i) of this section shall include all of the following information:

(A) The submitting party's name.

(B) The submitting party's EPA company registration number.

(C) The applicable reporting period.

(D) Transaction type (i.e., RIN buy, RIN sell, RIN separation, RIN retire, reinstated 2009 or 2010 RINs).

(E) Transaction date.

(F) For a RIN purchase or sale, the trading partner's name.

(G) For a RIN purchase or sale, the trading partner's EPA company registration number. For all other transactions, the submitting party's EPA company registration number.

(H) RIN subject to the transaction.

(I) For a RIN purchase or sale, the per gallon RIN price and/or the per gallon price of renewable fuel price with RINs included.

(J) The reason code for retiring RINs, separating RINs, buying RINs, or selling RINs.

(K) Any additional information that the Administrator may require.

(2) RIN activity reports shall be submitted to EPA according to the schedule specified in paragraph (f)(2) of this section. Each report shall summarize RIN activities for the reporting period, separately for RINs separated from a renewable fuel volume and RINs assigned to a renewable fuel volume. The quarterly RIN activity reports shall include all of the following information:

(i) The submitting party's name.

(ii) The submitting party's EPA company registration number.

(iii) The number of current-year RINs owned at the start of the quarter.

(iv) The number of prior-year RINs owned at the start of the quarter.

(v) The total current-year RINs purchased.

(vi) The total prior-year RINs purchased.

(vii) The total current-year RINs sold.

(viii) The total prior-year RINs sold.

(ix) The total current-year RINs retired.

(x) The total prior-year RINs retired.

(xi) The number of current-year RINs owned at the end of the quarter.

(xii) The number of prior-year RINs owned at the end of the quarter.

(xiii) The number of RINs generated.

(xiv) The volume of renewable fuel (in gallons) owned at the end of the quarter.

(xv) The total 2009 and 2010 retired RINs reinstated.

(xvi) Any additional information that the Administrator may require.

(3) All reports required under this paragraph (c) must be signed and certified as meeting all the applicable requirements of this subpart by the RIN

owner or a responsible corporate officer of the RIN owner.

(d) Except for those producers using feedstocks subject to the aggregate compliance approach described in § 80.1454(g), producers and RIN-generating importers of renewable fuel made from feedstocks that are planted crops and crop residue from existing foreign agricultural land, planted trees or tree residue from actively managed tree plantations, slash and pre-commercial thinnings from forestlands or biomass obtained from areas at risk of wildfire must submit quarterly reports according to the schedule in paragraph (f)(2) of this section that include all of the following:

(1) A summary of the types and quantities of feedstocks used in that quarter.

(2) Electronic data identifying the land by coordinates of the points defining the boundaries from which each type of feedstock listed per paragraph (d)(1) of this section was harvested.

(3) If electronic data identifying a plot of land have been submitted previously, producers and RIN-generating importers may submit a cross-reference to that electronic data.

(e) If EPA finds that the 2007 baseline amount of agricultural land has been exceeded in any year beginning in 2010, beginning on the first day of July of the following calendar year any producers or importers of renewable fuel as defined in § 80.1401 who use planted crops and/or crop residue from existing U.S. agricultural lands as feedstock must submit quarterly reports according to the schedule in paragraph (f)(2) of this section that include all of the following:

(1) A summary of the types and quantities of feedstocks used in that quarter.

(2) Electronic data identifying the land by coordinates of the points defining the boundaries from which each type of feedstock listed per paragraph (d)(1) of this section was harvested.

(3) If electronic data identifying a plot of land have been submitted previously, producers and RIN-generating importers may submit a cross-reference to that electronic data.

(f) *Quarterly report submission deadlines.* The submission deadlines for quarterly reports shall be as follows:

(1) [Reserved]

(2) Quarterly reports shall be submitted to EPA by the last day of the second month following the reporting period (i.e., the report covering January–March would be due by May 31st, the report covering April–June would be due by August 31st, the report covering July–September would be due by November 30th and the report covering October–December would be due by February 28th). Any reports generated by EMTS must be reviewed, supplemented, and/or corrected if not complete and accurate, and verified by the owner or responsible corporate office prior to submittal.

(3) Reports required must be signed and certified as meeting all the applicable requirements of this subpart by the owner or a responsible corporate officer of the submitter.

(g) All reports required under this section shall be submitted on forms and following procedures prescribed by the Administrator.

[75 FR 14863, Mar. 26, 2010, as amended at 75 FR 26044, May 10, 2010; 75 FR 79978, Dec. 21, 2010; 77 FR 1356, Jan. 9, 2012; 77 FR 74606, Dec. 17, 2012]

§ 80.1452 What are the requirements related to the EPA Moderated Transaction System (EMTS)?

(a) Each party required to submit information under this section must establish an account with the EPA Moderated Transaction System (EMTS) at least 60 days prior to engaging in any RIN transactions, or July 1, 2010, whichever is later.

(b) Starting July 1, 2010, each time a domestic or foreign producer or importer of renewable fuel assigns RINs to a batch of renewable fuel pursuant to § 80.1426(e), all the following information must be submitted to EPA via the submitting party's EMTS account within five (5) business days of the date of RIN assignment.

(1) The name of the renewable fuel producer or importer.

(2) The EPA company registration number of the renewable fuel producer or foreign ethanol producer, as applicable.

(3) The importer's EPA company registration number if applicable.

(4) The EPA facility registration number of the facility at which the renewable fuel producer or foreign ethanol producer produced the batch, as applicable.

(5) The EPA facility registration number of the importer that imported the batch, if applicable.

(6) The D code of RINs generated for the batch.

(7) The production process(es) used for the batch.

(8) The production date of the batch.

(9) The fuel type of the batch.

(10) The volume of the batch.

(11) The volume of denaturant and applicable equivalence value of each batch.

(12) Quantity of RINs generated for the batch.

(13) The type and quantity of feedstock(s) used for the batch.

(14) An affirmation that the feedstock(s) used for each batch meets the definition of renewable biomass as defined in § 80.1401.

(15) The type and quantity of co-products produced with the batch of renewable fuel.

(16) Any additional information the Administrator may require.

(c) Starting July 1, 2010, each time any party sells, separates, or retires RINs generated on or after July 1, 2010, all the following information must be submitted to EPA via the submitting party's EMTS account within five (5) business days of the reportable event. Starting July 1, 2010, each time any party purchases RINs generated on or after July 1, 2010, all the following information must be submitted to EPA via the submitting party's EMTS account within ten (10) business days of the reportable event. The reportable event for a RIN purchase or sale occurs on the date of transfer per § 80.1453(a)(4). The reportable event for a RIN separation or retirement occurs on the date of separation or retirement as described in § 80.1429.

(1) The submitting party's name.

(2) The submitting party's EPA company registration number.

(3) The generation year of the RINs.

(4) The RIN status (Assigned or Separated).

(5) The D code of the RINs.

(6) Transaction type (i.e., RIN buy, RIN sell, RIN separation, RIN retire).

(7) The date of transfer per § 80.1453(a)(4), if applicable.

(8) For a RIN purchase or sale, the trading partner's name.

(9) For a RIN purchase or sale, the trading partner's EPA company registration number.

(10) For an assigned RIN purchase or sale, the renewable fuel volume associated with the sale.

(11) Quantity of RINs involved in a transaction.

(12) The per gallon RIN price or the per-gallon price of renewable fuel with RINs included.

(13) The reason for retiring RINs, separating RINs, buying RINs, or selling RINs.

(14) Any additional information that the Administrator may require.

(d) All information required under this section shall be submitted on forms and following procedures prescribed by the Administrator.

[75 FR 14863, Mar. 26, 2010, as amended at 75 FR 79978, Dec. 21, 2010; 77 FR 1357, Jan. 9, 2012]

§ 80.1453 What are the product transfer document (PTD) requirements for the RFS program?

(a) On each occasion when any party transfers ownership of renewable fuels or separated RINs subject to this subpart, the transferor must provide to the transferee documents identifying the renewable fuel and any RINs (whether assigned or separated) which include all of the following information, as applicable:

(1) The name and address of the transferor and transferee.

(2) The transferor's and transferee's EPA company registration numbers.

(3) The volume of renewable fuel that is being transferred, if any.

(4) The date of the transfer.

(5) [Reserved]

(6) The quantity of RINs being traded.

(7) The D code of the RINs.

(8) The RIN status (Assigned or Separated).

(9) The RIN generation year.

(10) The associated reason for the sell or buy transaction (e.g., standard trade or remedial action).

(11) Additional RIN-related information, as follows:

(i) If assigned RINs are being transferred on the same PTD used to transfer ownership of the renewable fuel, then the assigned RIN information shall be identified on the PTD.

(A) The identifying information for a RIN that is transferred in EMTS generically is the information specified in paragraphs (a)(1) through (a)(10) of this section.

(B) The identifying information for a RIN that is transferred in EMTS uniquely is the information specified in paragraphs (a)(1) through (a)(10) of this section, the RIN generator company ID, the RIN generator facility ID, and the batch number.

(C) The identifying information for a RIN that is generated prior to July 1, 2010, is the 38-digit code pursuant to § 80.1425, in its entirety.

(ii) If assigned RINs are being transferred on a separate PTD from that which is used to transfer ownership of the renewable fuel, then the PTD which is used to transfer ownership of the renewable fuel shall include all the following:

(A) The number of gallon-RINs being transferred.

(B) A unique reference to the PTD which is transferring the assigned RINs.

(C) The information specified in paragraphs (a)(11)(i)(A) through (a)(11)(i)(C) of this section, as appropriate.

(iii) If no assigned RINs are being transferred with the renewable fuel, the PTD which is used to transfer ownership of the renewable fuel shall state ''No assigned RINs transferred.''.

(iv) If RINs have been separated from the renewable fuel or fuel blend pursuant to § 80.1429(b)(4), then all PTDs which are at any time used to transfer ownership of the renewable fuel or fuel blend shall state ''This volume of fuel must be used in the designated form, without further blending.''.

(b) Except for transfers to truck carriers, retailers, or wholesale purchaser-consumers, product codes may be used to convey the information required under paragraphs (a)(1) through (a)(11) of this section if such codes are clearly understood by each transferee.

(c) For renewable fuel, other than ethanol, that is not registered as motor vehicle fuel under 40 CFR part 79, the PTD which is used to transfer ownership of the renewable fuel shall state ''This volume of renewable fuel may not be used as a motor vehicle fuel.''

[75 FR 14863, Mar. 26, 2010, as amended at 75 FR 26045, May 10, 2010]

§ 80.1454 What are the recordkeeping requirements under the RFS program?

(a) *Requirements for obligated parties and exporters.* Beginning July 1, 2010, any obligated party (as described at § 80.1406) or exporter of renewable fuel (as described at § 80.1401) must keep all of the following records:

(1) Product transfer documents consistent with § 80.1453 and associated with the obligated party's or exporter's activity, if any, as transferor or transferee of renewable fuel or separated RINs.

(2) Copies of all reports submitted to EPA under § 80.1451(a), as applicable.

(3) Records related to each RIN transaction, including all of the following:

(i) A list of the RINs owned, purchased, sold, separated, retired, or reinstated.

(ii) The parties involved in each RIN transaction including the transferor, transferee, and any broker or agent.

(iii) The date of the transfer of the RIN(s).

(iv) Additional information, including contracts, correspondence, and invoices, related to details of the RIN transaction and its terms.

(4) Records related to the use of RINs (by facility, if applicable) for compliance, including all of the following:

(i) Methods and variables used to calculate the Renewable Volume Obligations pursuant to § 80.1407 or § 80.1430.

(ii) List of RINs used to demonstrate compliance.

(iii) Additional information related to details of RIN use for compliance.

(5) Records related to the separation of assigned RINs from renewable fuel volume.

(6) For exported renewable fuel, invoices, bills of lading and other documents describing the exported renewable fuel.

(b) *Requirements for all producers of renewable fuel.* Beginning July 1, 2010, any domestic or RIN-generating foreign producer of a renewable fuel as defined in § 80.1401 must keep all of the following records in addition to those required under paragraphs (c) or (d) of this section:

(1) Product transfer documents consistent with § 80.1453 and associated with the renewable fuel producer's activity, if any, as transferor or transferee of renewable fuel or separated RINs.

(2) Copies of all reports submitted to EPA under §§ 80.1449 and 80.1451(b).

(3) Records related to the generation and assignment of RINs for each facility, including all of the following:

(i) Batch volume in gallons.

(ii) Batch number.

(iii) RIN as assigned under § 80.1426, if applicable.

(iv) Identification of batches by renewable category.

(v) Type and quantity of co-products produced.

(vi) Type and quantity of feedstocks used.

(vii) Type and quantity of fuel used for process heat.

(viii) Feedstock energy calculations per § 80.1426(f)(4).

(ix) Date of production.

(x) Results of any laboratory analysis of batch chemical composition or physical properties.

(xi) For RINs generated for ethanol produced from corn starch at a facility using a pathway in Table 1 to § 80.1426 that requires the use of one or more of the advanced technologies listed in Table 2 to § 80.1426, documentation to demonstrate that employment of the required advanced technology or technologies was conducted in accordance with the specifications in Tables 1 and 2 to § 80.1426, including any requirement for application to 90% of the production on a calendar year basis.

(xii) All commercial documents and additional information related to details of RIN generation.

(4) Records related to each RIN transaction, separately for each transaction, including all of the following:

(i) A list of the RINs owned, purchased, sold, retired, or reinstated.

(ii) The parties involved in each transaction including the transferor, transferee, and any broker or agent.

(iii) The date of the transfer of the RIN(s).

(iv) Additional information related to details of the transaction and its terms.

(5) Records related to the production, importation, ownership, sale or use of any volume of renewable fuel for which RINs were generated or blend of renewable fuel for which RINs were generated and gasoline or diesel fuel that any party designates for use as transportation fuel, jet fuel, or heating oil and the use of the fuel or blend as transportation fuel, jet fuel, or heating oil without further blending, in the designated form.

(6) Copies of registration documents required under § 80.1450, including information on fuels and products, feedstocks, facility production processes, process changes, and capacity, energy sources, and a copy of the independent third party engineering review submitted to EPA per § 80.1450(b)(2).

(c) *Additional requirements for imports of renewable fuel.*—(1) Beginning July 1, 2010, any RIN-generating foreign producer of a renewable fuel or RIN-generating importer must keep records of feedstock purchases and transfers associated with renewable fuel for which RINs are generated, sufficient to verify that feedstocks used are renewable biomass (as defined in § 80.1401).

(i) RIN-generating foreign producers and importers of renewable fuel made from feedstocks that are planted crops or crop residue from existing foreign agricultural land, planted trees or tree residue from actively managed tree plantations, slash and pre-commercial thinnings from forestlands or biomass obtained from wildland-urban interface must maintain all the following records to verify the location where these feedstocks were produced:

(A) Maps or electronic data identifying the boundaries of the land where each type of feedstock was produced.

(B) Bills of lading, product transfer documents, or other commercial documents showing the quantity of feedstock purchased from each area identified in paragraph (c)(1)(i)(A) of this section, and showing each transfer of custody of the feedstock from the location where it was produced to the renewable fuel production facility.

(ii)(A) RIN-generating foreign producers and importers of renewable fuel made from planted crops or crop residue from existing foreign agricultural land must keep records that serve as evidence that the land from which the feedstock was obtained was cleared or cultivated prior to December 19, 2007 and actively managed or fallow, and nonforested on December 19, 2007. RIN-generating foreign producers or importers of renewable fuel made from planted trees or tree residue from actively managed tree plantations must keep records that serve as evidence that the land from which the feedstock was obtained was cleared prior to December 19, 2007 and actively managed on December 19, 2007.

(B) The records must be provided by the feedstock producer, traceable to the land in question, and consist of at least one of the following documents:

(*1*) Sales records for planted crops or trees, crop or tree residue, or livestock; purchasing records for fertilizer, weed control, or reseeding, including seeds, seedlings, or other nursery stock.

(*2*) A written management plan for agricultural or silvicultural purposes; documentation of participation in an agricultural or silvicultural program sponsored by a Federal, state, or local government agency.

(*3*) Documentation of land management in accordance with an agricultural or silvicultural product certification program, an agreement for land management consultation with a professional forester that identifies the land in question.

(*4*) Evidence of the existence and ongoing maintenance of a road system or other physical infrastructure designed and maintained for logging use, together with one of the aforementioned documents in this paragraph (c)(1)(ii)(B).

(iii) RIN-generating foreign producers and importers of renewable fuel made from any other type of renewable biomass must have documents from their feedstock supplier certifying that the feedstock qualifies as renewable biomass as defined in § 80.1401, describing the feedstock and identifying the process that was used to generate the feedstock.

(2) Beginning July 1, 2010, any RIN-generating importer of renewable fuel (as defined in § 80.1401) must keep all of the following records:

(i) Product transfer documents consistent with § 80.1453 and associated with the renewable fuel importer's activity, if any, as transferor or transferee of renewable fuel.

(ii) Copies of all reports submitted to EPA under §§ 80.1449 and 80.1451(b).

(iii) Records related to the generation and assignment of RINs for each facility, including all of the following:

(A) Batch volume in gallons.

(B) Batch number.

(C) RIN as assigned under § 80.1426.

(D) Identification of batches by renewable category.

(E) Type and quantity of feedstocks used.

(F) Type and quantity of fuel used for process heat.

(G) Date of import.

(H) Results of any laboratory analysis of batch chemical composition or physical properties.

(I) The EPA registration number of the foreign renewable fuel producers producing the fuel.

(J) Additional information related to details of RIN generation.

(iv) Records related to each RIN transaction, including all of the following:

(A) A list of the RINs owned, purchased, sold, separated, retired, or reinstated.

(B) The parties involved in each transaction including the transferor, transferee, and any broker or agent.

(C) The date of the transfer of the RIN(s).

(D) Additional information related to details of the transaction and its terms.

(v) Copies of registration documents required under § 80.1450.

(vi) Records related to the import of any volume of renewable fuel that the

importer designates for use as transportation fuel, jet fuel, or heating oil.

(d) *Additional requirements for domestic producers of renewable fuel.* Except as provided in paragraphs (g) and (h) of this section, beginning July 1, 2010, any domestic producer of renewable fuel as defined in § 80.1401 that generates RINs for such fuel must keep documents associated with feedstock purchases and transfers that identify where the feedstocks were produced and are sufficient to verify that feedstocks used are renewable biomass (as defined in § 80.1401) if RINs are generated.

(1) Domestic producers of renewable fuel made from feedstocks that are planted trees or tree residue from actively managed tree plantations, slash and pre-commercial thinnings from forestlands or biomass obtained from areas at risk of wildfire must maintain all the following records to verify the location where these feedstocks were produced:

(i) Maps or electronic data identifying the boundaries of the land where each type of feedstock was produced.

(ii) Bills of lading, product transfer documents or other commercial documents showing the quantity of feedstock purchased from each area identified in paragraph (d)(1)(i) of this section, and showing each transfer of custody of the feedstock from the location where it was produced to the renewable fuel production facility.

(2) Domestic producers of renewable fuel made from planted trees or tree residue from actively managed tree plantations must keep records that serve as evidence that the land from which the feedstock was obtained was cleared prior to December 19, 2007 and actively managed on December 19, 2007. The records must be provided by the feedstock producer and must include at least one of the following documents, which must be traceable to the land in question:

(i) Sales records for planted trees or tree residue.

(ii) Purchasing records for fertilizer, weed control, or reseeding, including seeds, seedlings, or other nursery stock.

(iii) A written management plan for silvicultural purposes.

(iv) Documentation of participation in a silvicultural program sponsored by a Federal, state, or local government agency.

(v) Documentation of land management in accordance with a silvicultural product certification program, an agreement for land management consultation with a professional forester.

(vi) Evidence of the existence and ongoing maintenance of a road system or other physical infrastructure designed and maintained for logging use, together with one of the aforementioned documents.

(3) Domestic producers of renewable fuel made from planted crops or crop residue from existing foreign agricultural land must keep all the following records:

(i) Records that serve as evidence that the land from which the feedstock was obtained was cleared or cultivated prior to December 19, 2007 and actively managed or fallow, and nonforested on December 19, 2007. The records must be provided by the feedstock producer and must include at least one of the following documents, which must be traceable to the land in question:

(A) Sales records for planted crops, crop residue, or livestock.

(B) Purchasing records for fertilizer, weed control, seeds, seedlings, or other nursery stock.

(C) A written management plan for agricultural purposes.

(D) Documentation of participation in an agricultural program sponsored by a Federal, State, or local government agency.

(E) Documentation of land management in accordance with an agricultural product certification program.

(ii) Records to verify the location where the feedstocks were produced:

(A) Maps or electronic data identifying the boundaries of the land where each type of feedstock was produced; and

(B) Bills of lading, product transfer documents or other commercial documents showing the quantity of feedstock purchased from each area identified in paragraph (d)(3)(ii)(A) of this section, and showing each transfer of custody of the feedstock from the location where it was produced to the renewable fuel facility.

(4) Domestic producers of renewable fuel made from any other type of renewable biomass must have documents from their feedstock supplier certifying that the feedstock qualifies as renewable biomass as defined in § 80.1401, describing the feedstock. Separated yard and food waste and separated municipal solid waste are subject to the requirements in paragraph (j) of this section.

(e) *Additional requirements for producers of fuel exempt from the 20% GHG reduction requirement.* Beginning July 1, 2010, any production facility with a baseline volume of fuel that is not subject to the 20% GHG threshold, pursuant to § 80.1403(c) and (d), must keep all of the following:

(1) Detailed engineering plans for the facility.

(2) Federal, State, and local (or foreign governmental) preconstruction approvals and permitting.

(3) Procurement and construction contracts and agreements.

(f) *Requirements for other parties that own RINs.* Beginning July 1, 2010, any party, other than those parties covered in paragraphs (a) and (b) of this section, that owns RINs must keep all of the following records:

(1) Product transfer documents consistent with § 80.1453 and associated with the party's activity, if any, as transferor or transferee of renewable fuel or separated RINs.

(2) Copies of all reports submitted to EPA under § 80.1451(c).

(3) Records related to each RIN transaction by renewable fuel category, including all of the following:

(i) A list of the RINs owned, purchased, sold, retired, or reinstated.

(ii) The parties involved in each RIN transaction including the transferor, transferee, and any broker or agent.

(iii) The date of the transfer of the RIN(s).

(iv) Additional information related to details of the transaction and its terms.

(4) Records related to any volume of renewable fuel that the party designated for use as transportation fuel, jet fuel, or heating oil and from which RINs were separated pursuant to § 80.1429(b)(4).

(g) *Aggregate compliance with renewable biomass requirement.* Any producer or RIN-generating importer of renewable fuel made from planted crops or crop residue from existing U.S. agricultural land as defined in § 80.1401, or from planted crops or crop residue from existing agricultural land in a country covered by a petition approved pursuant to § 80.1457, is covered by the aggregate compliance approach and is not subject to the recordkeeping requirements for planted crops and crop residue at § 80.1454(g)(2) unless EPA publishes a finding that the 2007 baseline amount of agricultural land in the U.S. has been exceeded or, for the aggregate compliance approach in a foreign country, that the withdrawal of EPA approval of the aggregate compliance approach is warranted pursuant to § 80.1457(e).

(1) EPA will make findings concerning whether the 2007 baseline amount of agricultural land in the U.S. or other country covered by a petition approved pursuant to § 80.1457 has been exceeded and will publish these findings in the FEDERAL REGISTER by November 30 of the year preceding the compliance period.

(2) If EPA finds that the 2007 baseline amount of agricultural land in the U.S. or other country covered by a petition approved pursuant to § 80.1457 has been exceeded, beginning on the first day of July of the compliance period in question any producer or RIN-generating importer of renewable fuel made from planted crops or crop residue in the country for which such a finding is made must keep all the following records:

(i) Records that serve as evidence that the land from which the feedstock was obtained was cleared or cultivated prior to December 19, 2007 and actively managed or fallow, and nonforested on December 19, 2007. The records must be provided by the feedstock producer and must include at least one of the following documents, which must be traceable to the land in question:

(A) Sales records for planted crops, crop residue or livestock.

(B) Purchasing records for fertilizer, weed control, seeds, seedlings, or other nursery stock.

(C) A written management plan for agricultural purposes.

(D) Documentation of participation in an agricultural program sponsored by a Federal, state, or local government agency.

(E) Documentation of land management in accordance with an agricultural product certification program.

(ii) Records to verify the location where the feedstocks were produced:

(A) Maps or electronic data identifying the boundaries of the land where each type of feedstock was produced; and

(B) Bills of lading, product transfer documents or other commercial documents showing the quantity of feedstock purchased from each area identified in paragraph (g)(2)(ii)(A) of this section, and showing each transfer of custody of the feedstock from the location where it was produced to the renewable fuel facility.

(h) *Alternative renewable biomass tracking requirement*. Any foreign or domestic renewable fuel producer or RIN-generating importer may comply with the following alternative renewable biomass tracking requirement instead of the recordkeeping requirements in paragraphs (c)(1), (d), and (g) of this section:

(1) To comply with the alternative renewable biomass tracking requirement under this paragraph (h), a renewable fuel producer or importer must either arrange to have an independent third party conduct a comprehensive program of annual compliance surveys, or participate in the funding of an organization which arranged to have an independent third party conduct a comprehensive program of annual compliance surveys, to be carried out in accordance with a survey plan which has been approved by EPA.

(2) The annual compliance surveys under this paragraph (h) must be all the following:

(i) Planned and conducted by an independent surveyor that meets the requirements in § 80.68(c)(13)(i).

(ii) Conducted at renewable fuel production and import facilities and their feedstock suppliers.

(iii) Representative of all renewable fuel producers and importers in the survey area and representative of their feedstock suppliers.

(iv) Designed to achieve at least the same level of quality assurance required in paragraphs (c)(1), (d) and (g) of this section.

(3) The compliance survey program shall require the independent surveyor conducting the surveys to do all the following:

(i) Conduct feedstock audits of renewable fuel production and import facilities in accordance with the survey plan approved under this paragraph (h), or immediately notify EPA of any refusal of these facilities to allow an audit to be conducted.

(ii) Obtain the records and product transfer documents associated with the feedstocks being audited.

(iii) Determine the feedstock supplier(s) that supplied the feedstocks to the renewable fuel producer.

(iv) Confirm that feedstocks used to produce RIN-generating renewable fuels meet the definition of renewable biomass as defined in § 80.1401.

(v) Immediately notify EPA of any case where the feedstocks do not meet the definition of renewable biomass as defined in § 80.1401.

(vi) Immediately notify EPA of any instances where a renewable fuel producer, importer or feedstock supplier subject to review under the approved plan fails to cooperate in the manner described in this section.

(vii) Submit to EPA a report of each survey, within thirty days following the completion of each survey, such report to include all the following information:

(A) The identification of the person who conducted the survey.

(B) An attestation by the officer of the surveyor company that the survey was conducted in accordance with the survey plan and the survey results are accurate.

(C) Identification of the parties for whom the survey was conducted.

(D) Identification of the covered area surveyed.

(E) The dates on which the survey was conducted.

(F) The address of each facility at which the survey audit was conducted and the date of the audit.

(G) A description of the methodology used to select the locations for survey audits and the number of audits conducted.

(viii) Maintain all records relating to the survey audits conducted under this section (h) for a period of at least 5 years.

(ix) At any time permit any representative of EPA to monitor the conduct of the surveys, including observing audits, reviewing records, and analysis of the audit results.

(4) A survey plan under this paragraph (h) must include all the following:

(i) Identification of the parties for whom the survey is to be conducted.

(ii) Identification of the independent surveyor.

(iii) A methodology for determining all the following:

(A) When the audits will be conducted.

(B) The audit locations.

(C) The number of audits to be conducted during the annual compliance period.

(iv) Any other elements determined by EPA to be necessary to achieve the level of quality assurance required under paragraphs (c)(1), (d), and (g) of this section.

(5)(i) Each renewable fuel producer and importer who participates in the alternative renewable biomass tracking under this paragraph (h) must take all reasonable steps to ensure that each feedstock producer, aggregator, distributor, or supplier cooperates with this program by allowing the independent surveyor to audit their facility and by providing to the independent surveyor and/or EPA, upon request, copies of management plans, product transfer documents, and other records or information regarding the source of any feedstocks received.

(ii) Reasonable steps under paragraph (h)(5)(i) of this section must include, but typically should not be limited to: Contractual agreements with feedstock producers, aggregators, distributors, and suppliers, which require them to cooperate with the independent surveyor and/or EPA in the manner described in paragraph (h)(5)(i) of this section.

(6) The procedure for obtaining EPA approval of a survey plan under this paragraph (h), and for revocation of any such approval, are as follows:

(i) A detailed survey plan which complies with the requirements of this paragraph (h) must be submitted to EPA, no later than September 1 of the year preceding the calendar year in which the surveys will be conducted.

(ii) The survey plan must be signed by a responsible corporate officer of the renewable fuel producer or importer, or responsible officer of the organization which arranges to have an independent surveyor conduct a program of renewable biomass compliance surveys, as applicable.

(iii) The survey plan must be sent to the following address: Director, Compliance and Innovative Strategies Division, U.S. Environmental Protection Agency, 1200 Pennsylvania Ave., NW. (6406J), Washington, DC 20460.

(iv) EPA will send a letter to the party submitting a survey plan under this section, either approving or disapproving the survey plan.

(v) EPA may revoke any approval of a survey plan under this section for cause, including an EPA determination that the approved survey plan had proved inadequate in practice or that it was not fully implemented.

(vi) The approving official for an alternative quality assurance program under this section is the Director of the Compliance and Innovative Strategies Division, Office of Transportation and Air Quality.

(vii) Any notifications required under this paragraph (h) must be directed to the officer designated in paragraph (h)(6)(vi) of this section.

(7)(i) No later than December 1 of the year preceding the year in which the surveys will be conducted, the contract with the independent surveyor shall be in effect, and an amount of money necessary to carry out the entire survey plan shall be paid to the independent surveyor or placed into an escrow account with instructions to the escrow agent to pay the money to the independent surveyor during the course of the conduct of the survey plan.

(ii) No later than December 15 of the year preceding the year in which the surveys will be conducted, EPA must

receive a copy of the contract with the independent surveyor, proof that the money necessary to carry out the survey plan has either been paid to the independent surveyor or placed into an escrow account, and, if placed into an escrow account, a copy of the escrow agreement, to be sent to the official designated in paragraph (h)(6)(iii) of this section.

(8) A failure of any renewable fuel producers or importer to fulfill or cause to be fulfilled any of the requirements of this paragraph (h) will cause the option for such party to use the alternative quality assurance requirements under this paragraph (h) to be void *ab initio*.

(i) Beginning July 1, 2010, all parties must keep transaction information sent to EMTS in addition to other records required under this section.

(j) A renewable fuel producer that produces fuel from separated yard and food waste as described in § 80.1426(f)(5)(i)(A) and (B) and separated municipal solid waste as described in § 80.1426(f)(5)(i)(C) shall keep all the following additional records:

(1) For separated yard and food waste as described in § 80.1426(f)(5)(i)(A) and (B):

(i) Documents demonstrating the amounts, by weight, purchased of separated yard and food waste for use as a feedstock in producing renewable fuel.

(ii) Such other records as may be requested by the Administrator.

(2) For separated municipal solid waste as described in § 80.1426(f)(5)(i)(C):

(i) Contracts and documents memorializing the sale of paper, cardboard, plastics, rubber, textiles, metals, and glass separated from municipal solid waste for recycling.

(ii) Documents demonstrating the amounts by weight purchased of post-recycled separated yard and food waste for use as a feedstock in producing renewable fuel.

(iii) Documents demonstrating the fuel sampling methods used pursuant to § 80.1426(f)(9) and the results of all fuel analyses to determine the non-fossil fraction of fuel made from separated municipal solid waste.

(iv) Such other records as may be requested by the Administrator.

(k)(1) Biogas and electricity in pathways involving feedstocks other than grain sorghum. A renewable fuel producer that generates RINs for biogas or electricity produced from renewable biomass (renewable electricity) for fuels that are used for transportation pursuant to § 80.1426(f)(10) and (11), or that uses process heat from biogas to generate RINs for renewable fuel pursuant to § 80.1426(f)(12) shall keep all of the following additional records:

(i) Contracts and documents memorializing the sale of biogas or renewable electricity for use as transportation fuel relied upon in § 80.1426(f)(10), § 80.1426(f)(11), or for use of biogas for use as process heat to make renewable fuel as relied upon in § 80.1426(f)(12), and the transfer of title of the biogas or renewable electricity and all associated environmental attributes from the point of generation to the facility which sells or uses the fuel for transportation purposes.

(ii) Documents demonstrating the volume and energy content of biogas, or kilowatts of renewable electricity, relied upon under § 80.1426(f)(10) that was delivered to the facility which sells or uses the fuel for transportation purposes.

(iii) Documents demonstrating the volume and energy content of biogas, or kilowatts of renewable electricity, relied upon under § 80.1426(f)(11), or biogas relied upon under § 80.1426(f)(12), that was placed into the common carrier pipeline (for biogas) or transmission line (for renewable electricity).

(iv) Documents demonstrating the volume and energy content of biogas, or kilowatts of renewable electricity, relied upon under § 80.1426(f)(12) at the point of distribution.

(v) Affidavits from the biogas or renewable electricity producer and all parties that held title to the biogas or renewable electricity confirming that title and environmental attributes of the biogas or renewable electricity relied upon under § 80.1426(f)(10) and (11) were used for transportation purposes only, and that the environmental attributes of the biogas relied upon under § 80.1426(f)(12) were used for process heat at the renewable fuel producer's facility, and for no other purpose. The renewable fuel producer shall create

and/or obtain these affidavits at least once per calendar quarter.

(vi) The biogas or renewable electricity producer's Compliance Certification required under Title V of the Clean Air Act.

(vii) The biogas or renewable electricity producer's Compliance Certification required under Title V of the Clean Air Act.

(viii) Such other records as may be requested by the Administrator.

(2) Biogas and electricity in pathways involving grain sorghum as feedstock. A renewable fuel producer that produces fuel pursuant to a pathway that uses grain sorghum as a feedstock shall keep all of the following additional records, as appropriate:

(i) Contracts and documents memorializing the purchase and sale of biogas and the transfer of biogas from the point of generation to the ethanol production facility.

(ii) If the advanced biofuel pathway is used, documents demonstrating the total kilowatt-hours (kWh) of electricity used from the grid, and the total kWh of grid electricity used on a per gallon of ethanol basis, pursuant to § 80.1426(f)(13).

(iii) Affidavits from the producer of biogas used at the facility, and all parties that held title to the biogas, confirming that title and environmental attributes of the biogas relied upon under § 80.1426(f)(13) were used for producing ethanol at the renewable fuel production facility and for no other purpose. The renewable fuel producer shall obtain these affidavits at least once per calendar quarter.

(iv) The biogas producer's Compliance Certification required under Title V of the Clean Air Act.

(v) Such other records as may be requested by the Administrator.

(l) The records required under paragraphs (a) through (d) and (f) through (k) of this section and under § 80.1453 shall be kept for five years from the date they were created, except that records related to transactions involving RINs shall be kept for five years from the date of the RIN transaction.

(m) The records required under paragraph (e) of this section shall be kept through calendar year 2022.

(n) On request by EPA, the records required under this section and under § 80.1453 must be made available to the Administrator or the Administrator's authorized representative. For records that are electronically generated or maintained, the equipment or software necessary to read the records shall be made available; or, if requested by EPA, electronic records shall be converted to paper documents.

(o) The records required in paragraphs (b)(3) and (c)(1) of this section must be transferred with any renewable fuel sent to the importer of that renewable fuel by any foreign producer not generating RINs for his renewable fuel.

(p) Copies of all reports required under § 80.1464.

[75 FR 14863, Mar. 26, 2010, as amended at 75 FR 26046, May 10, 2010; 75 FR 76829, Dec. 9, 2010; 75 FR 79978, Dec. 21, 2010; 77 FR 74606, Dec. 17, 2012; 78 FR 22789, Apr. 17, 2013]

§ 80.1455 What are the small volume provisions for renewable fuel production facilities and importers?

(a) *Standard volume threshold.* Renewable fuel production facilities located within the United States that produce less than 10,000 gallons of renewable fuel each year, and importers who import less than 10,000 gallons of renewable fuel each year, are not subject to the requirements of § 80.1426(a) and (e) related to the generation and assignment of RINs to batches of renewable fuel. Except as stated in paragraph (b) of this section, such production facilities and importers that do not generate and assign RINs to batches of renewable fuel are also exempt from all the following requirements of this subpart:

(1) The registration requirements of § 80.1450.

(2) The reporting requirements of § 80.1451.

(3) The EMTS requirements of § 80.1452.

(4) The recordkeeping requirements of § 80.1454.

(5) The attest engagement requirements of § 80.1464.

(6) The production outlook report requirements of § 80.1449.

(b)(1) Renewable fuel production facilities and importers who produce or

import less than 10,000 gallons of renewable fuel each year and that generate and assign RINs to batches of renewable fuel are subject to the provisions of §§ 80.1426, 80.1449 through 80.1452, 80.1454, and 80.1464.

(2) Renewable fuel production facilities and importers who produce or import less than 10,000 gallons of renewable fuel each year but wish to own RINs will be subject to all requirements stated in paragraphs (a)(1) through (a)(6) and (b)(1) of this section, and all other applicable requirements of this subpart M.

(c) *Temporary volume threshold*. Renewable fuel production facilities located within the United States that produce less than 125,000 gallons of renewable fuel each year are not subject to the requirements of § 80.1426(a) and (e) related to the generation and assignment of RINs to batches of renewable fuel for up to three years, beginning with the calendar year in which the production facility produces its first gallon of renewable fuel. Except as stated in paragraph (d) of this section, such production facilities that do not generate and assign RINs to batches of renewable fuel are also exempt from all the following requirements of this subpart for a maximum of three years:

(1) The registration requirements of § 80.1450.

(2) The reporting requirements of § 80.1451.

(3) The EMTS requirements of § 80.1452.

(4) The recordkeeping requirements of § 80.1454.

(5) The attest engagement requirements of § 80.1464.

(6) The production outlook report requirements of § 80.1449.

(d)(1) Renewable fuel production facilities who produce less than 125,000 gallons of renewable fuel each year and that generate and assign RINs to batches of renewable fuel are subject to the provisions of §§ 80.1426, 80.1449 through 80.1452, 80.1454, and 80.1464.

(2) Renewable fuel production facilities who produce less than 125,000 gallons of renewable fuel each year but wish to own RINs will be subject to all requirements stated in paragraphs (c)(1) through (c)(6) and (d)(1) of this section, and all other applicable requirements of this subpart M.

[75 FR 14863, Mar. 26, 2010, as amended at 75 FR 26047, May 10, 2010]

§ 80.1456 What are the provisions for cellulosic biofuel waiver credits?

(a) If EPA reduces the applicable volume of cellulosic biofuel pursuant to section 211(o)(7)(D)(i) of the Clean Air Act (42 U.S.C. 7545(o)(7)(D)(i)) for any given compliance year, then EPA will provide cellulosic biofuel waiver credits for purchase for that compliance year.

(1) The price of these cellulosic biofuel waiver credits will be set by EPA on an annual basis in accordance with paragraph (d) of this section.

(2) The total cellulosic biofuel waiver credits available will be equal to the reduced cellulosic biofuel volume established by EPA for the compliance year.

(b) *Use of cellulosic biofuel waiver credits*.—(1) Cellulosic biofuel waiver credits are only valid for use in the compliance year that they are made available.

(2) Cellulosic biofuel waiver credits are nonrefundable.

(3) Cellulosic biofuel waiver credits are nontransferable.

(4) Cellulosic biofuel waiver credits may only be used for an obligated party's current year cellulosic biofuel RVO and not towards any prior year deficit cellulosic biofuel volume obligations.

(c) *Purchase of cellulosic biofuel waiver credits*.—(1) Only parties with an RVO for cellulosic biofuel may purchase cellulosic biofuel waiver credits.

(2) Cellulosic biofuel waiver credits shall be purchased from EPA at the time that a party submits its annual compliance report to EPA pursuant to § 80.1451(a)(1).

(3) Parties may not purchase more cellulosic biofuel waiver credits than their current year cellulosic biofuel RVO minus cellulosic biofuel RINs with a D code of 3 that they own.

(4) Cellulosic biofuel waiver credits may only be used to meet an obligated party's cellulosic biofuel RVO.

(d) *Setting the price of cellulosic biofuel waiver credits.*—(1) The price for cellulosic biofuel waiver credits shall be set equal to the greater of:

(i) $0.25 per cellulosic biofuel waiver credit, adjusted for inflation in comparison to calendar year 2008; or

(ii) $3.00 less the wholesale price of gasoline per cellulosic biofuel waiver credit, adjusted for inflation in comparison to calendar year 2008.

(2) The wholesale price of gasoline will be calculated by averaging the most recent twelve monthly values for U.S. Total Gasoline Bulk Sales (Price) by Refiners as provided by the Energy Information Administration that are available as of September 30 of the year preceding the compliance period.

(3) The inflation adjustment will be calculated by comparing the most recent Consumer Price Index for All Urban Consumers (CPI–U) for All Items expenditure category as provided by the Bureau of Labor Statistics that is available at the time EPA sets the cellulosic biofuel standard to the most recent comparable value reported after December 31, 2008. When EPA must set the price of cellulosic biofuel waiver credits for a compliance year, EPA will calculate the new amounts for paragraphs (d)(1)(i) and (ii) of this section for each year after 2008 and every month where data is available for the year preceding the compliance period at the time EPA sets the cellulosic biofuel standard.

(e) Cellulosic biofuel waiver credits under this section will only be able to be purchased on forms and following procedures prescribed by EPA.

§ 80.1457 Petition process for aggregate compliance approach for foreign countries.

(a) EPA may approve a petition for application of the aggregate compliance approach to planted crops and crop residue from existing agricultural land in a foreign country if EPA determines that an aggregate compliance approach will provide reasonable assurance that planted crops and crop residue from the country in question meet the definition of renewable biomass and will continue to meet the definition of renewable biomass, based on the submission of credible, reliable, and verifiable data.

(1) As part of its evaluation, EPA will consider all of the following:

(i) Whether there has been a reasonable identification of the ''2007 baseline area of land,'' defined as the total amount of cropland, pastureland, and land that is equivalent to U.S. Conservation Reserve Program land in the country in question that was actively managed or fallow and nonforested on December 19, 2007.

(ii) Whether information on the total amount of cropland, pastureland, and land that is equivalent to U.S. Conservation Reserve Program land in the country in question for years preceding and following calendar year 2007 shows that the 2007 baseline area of land identified in paragraph (a)(1)(i) of this section is not likely to be exceeded in the future.

(iii) Whether economic considerations, legal constraints, historical land use and agricultural practices and other factors show that it is likely that producers of planted crops and crop residue will continue to use agricultural land within the 2007 baseline area of land identified in paragraph (a)(1)(i) of this section into the future, as opposed to clearing and cultivating land not included in the 2007 baseline area of land.

(iv) Whether there is a reliable method to evaluate on an annual basis whether the 2007 baseline area of land identified in paragraph (a)(1)(i) of this section is being or has been exceeded.

(v) Whether a credible and reliable entity has been identified to conduct data gathering and analysis, including annual identification of the aggregate amount of cropland, pastureland, and land that is equivalent to U.S. Conservation Reserve Program land, needed for the annual EPA evaluation specified in § 80.1454(g)(1), and whether the data, analyses, and methodologies are publicly available.

(2) [Reserved]

(b) Any petition and all supporting materials submitted under paragraph (a) of this section must be submitted both in English and its original language (if other than English), and must

include all of the following or an explanation of why it is not needed for EPA to consider the petition:

(1) Maps or electronic data identifying the boundaries of the land for which the petitioner seeks approval of an aggregate compliance approach.

(2) The total amount of land that is cropland, pastureland, or land equivalent to U.S. Conservation Reserve Program land within the geographic boundaries specified in paragraph (b)(1) of this section that was cleared or cultivated prior to December 19, 2007 and that was actively managed or fallow and nonforested on that date, and

(3) Land use data that demonstrates that the land identified in paragraph (b)(1) of this section is cropland, pastureland or land equivalent to U.S. Conservation Reserve Program land that was cleared or cultivated prior to December 19, 2007, and that was actively managed or fallow and nonforested on that date, which may include any of the following:

(i) Satellite imagery or data.

(ii) Aerial photography.

(iii) Census data.

(iv) Agricultural survey data.

(v) Agricultural economic modeling data.

(4) Historical land use data for the land within the geographic boundaries specified in paragraph (b)(1) of this section to the current year, which may include any of the following:

(i) Satellite imagery or data.

(ii) Aerial photography.

(iii) Census data.

(iv) Agricultural surveys.

(v) Agricultural economic modeling data.

(5) A description of any applicable laws, agricultural practices, economic considerations, or other relevant factors that had or may have an effect on the use of agricultural land within the geographic boundaries specified in paragraph (b)(1) of this section, including information regarding the efficacy and enforcement of relevant laws and regulations.

(6) A plan describing how the petitioner will identify a credible and reliable entity who will, on a continuing basis, conduct data gathering, analysis, and submittal to assist EPA in making an annual determination of whether the criteria specified in paragraph (a) of this section remains satisfied.

(7) A letter, signed by a national government representative at the ministerial level or equivalent, confirming that the petition and all supporting data have been reviewed and verified by the ministry (or ministries) or department(s) of the national government with primary expertise in agricultural land use patterns, practices, data, and statistics, that the data support a finding that planted crops and crop residue from the specified country meet the definition of renewable biomass and will continue to meet the definition of renewable biomass, and that the responsible national government ministry (or ministries) or department(s) will review and verify the data submitted on an annual basis to facilitate EPA's annual evaluation of the 2007 baseline area of land specified in § 80.1454(g)(1) for the country in question.

(8) Any additional information the Administrator may require.

(c) EPA will issue a FEDERAL REGISTER notice informing the public of receipt of any petition submitted pursuant to this section and will provide a 60-day period for public comment. If EPA approves a petition it will issue a FEDERAL REGISTER notice announcing its decision and specifying an effective date for the application of the aggregate compliance approach to planted crops and crop residue from the country. Thereafter, the planted crops and crop residue from the country will be covered by the aggregate compliance approach set forth in § 80.1454(g), or as otherwise specified pursuant to paragraph (d) of this section.

(d) If EPA grants a petition to establish an aggregate compliance approach for planted crops and crop residue from a foreign country, it may include any conditions that EPA considers appropriate in light of the conditions and circumstances involved.

(e)(1) EPA may withdraw its approval of the aggregate compliance approach for the planted crops and crop residue from the country in question if:

(i) EPA determines that the data submitted pursuant to the plan described in paragraph (b)(6) of this section does not demonstrate that the amount of

cropland, pastureland and land equivalent to U.S. Conservation Reserve Program land within the geographic boundaries covered by the approved petition does not exceed the 2007 baseline area of land;

(ii) EPA determines based on other information that the criteria specified in paragraph (a) of this section is no longer satisfied; or

(iii) EPA determines that the data needed for its annual evaluation has not been collected and submitted in a timely and appropriate manner.

(2) If EPA withdraws its approval for a given country, then producers using planted crops or crop residue from that country will be subject to the individual recordkeeping and reporting requirements of § 80.1454(b) through (d) in accordance with the schedule specified in § 80.1454(g).

[75 FR 76829, Dec. 9, 2010]

§§ 80.1458–80.1459 [Reserved]

§ 80.1460 What acts are prohibited under the RFS program?

(a) *Renewable fuels producer or importer violation.* Except as provided in § 80.1455, no person shall produce or import a renewable fuel without complying with the requirements of § 80.1426 regarding the generation and assignment of RINs.

(b) *RIN generation and transfer violations.* No person shall do any of the following:

(1) Generate a RIN for a fuel that is not a renewable fuel, or for which the applicable renewable fuel volume was not produced.

(2) Create or transfer to any person a RIN that is invalid under § 80.1431.

(3) Transfer to any person a RIN that is not properly identified as required under § 80.1425.

(4) Transfer to any person a RIN with a K code of 1 without transferring an appropriate volume of renewable fuel to the same person on the same day.

(5) Introduce into commerce any renewable fuel produced from a feedstock or through a process that is not described in the person's registration information.

(6) Generate a RIN for fuel for which RINs have previously been generated.

(c) *RIN use violations.* No person shall do any of the following:

(1) Fail to acquire sufficient RINs, or use invalid RINs, to meet the person's RVOs under § 80.1427.

(2) Use a validly generated RIN to meet the person's RVOs under § 80.1427, or separate and transfer a validly generated RIN, where the person using the RIN ultimately uses the renewable fuel volume associated with the RIN in an application other than for use as transportation fuel, jet fuel, or heating oil (as defined in § 80.1401).

(3) Use a validly generated RIN to meet the person's RVOs under § 80.1427, or separate and transfer a validly generated RIN, where the person ultimately uses the renewable fuel volume associated with the RIN in an application other than for use as transportation fuel, jet fuel, or heating oil (as defined in § 80.1401).

(d) *RIN retention violation.* No person shall retain RINs in violation of the requirements in § 80.1428(a)(5).

(e) *Causing a violation.* No person shall cause another person to commit an act in violation of any prohibited act under this section.

(f) *Failure to meet a requirement.* No person shall fail to meet any requirement that applies to that person under this subpart.

[75 FR 14863, Mar. 26, 2010, as amended at 75 FR 26047, May 10, 2010; 77 FR 1357, Jan. 9, 2012]

§ 80.1461 Who is liable for violations under the RFS program?

(a) *Liability for violations of prohibited acts.*—(1) Any person who violates a prohibition under § 80.1460(a) through (d) is liable for the violation of that prohibition.

(2) Any person who causes another person to violate a prohibition under § 80.1460(a) through (d) is liable for a violation of § 80.1460(e).

(b) *Liability for failure to meet other provisions of this subpart.*—(1) Any person who fails to meet a requirement of any provision of this subpart is liable for a violation of that provision.

(2) Any person who causes another person to fail to meet a requirement of any provision of this subpart is liable for causing a violation of that provision.

(c) *Parent corporation liability*. Any parent corporation is liable for any violation of this subpart that is committed by any of its subsidiaries.

(d) *Joint venture liability*. Each partner to a joint venture is jointly and severally liable for any violation of this subpart that is committed by the joint venture operation.

§ 80.1462 [Reserved]

§ 80.1463 What penalties apply under the RFS program?

(a) Any person who is liable for a violation under § 80.1461 is subject to a civil penalty as specified in sections 205 and 211(d) of the Clean Air Act, for every day of each such violation and the amount of economic benefit or savings resulting from each violation.

(b) Any person liable under § 80.1461(a) for a violation of § 80.1460(c) for failure to meet its RVOs, or § 80.1460(e) for causing another person to fail to meet their RVOs during any compliance period, is subject to a separate day of violation for each day in the compliance period.

(c) Any person liable under § 80.1461(b) for failure to meet, or causing a failure to meet, a requirement of any provision of this subpart is liable for a separate day of violation for each day such a requirement remains unfulfilled.

[75 FR 14863, Mar. 26, 2010, as amended at 75 FR 26047, May 10, 2010]

§ 80.1464 What are the attest engagement requirements under the RFS program?

The requirements regarding annual attest engagements in §§ 80.125 through 80.127, and 80.130, also apply to any attest engagement procedures required under this subpart M. In addition to any other applicable attest engagement procedures, such as the requirements in §§ 80.1465 and 80.1466, the following annual attest engagement procedures are required under this subpart.

(a) *Obligated parties and exporters*. The following attest procedures shall be completed for any obligated party as stated in § 80.1406(a) or exporter of renewable fuel:

(1) *Annual compliance demonstration report*.—(i) Obtain and read a copy of the annual compliance demonstration report required under § 80.1451(a)(1) which contains information regarding all the following:

(A) The obligated party's volume of all products listed in § 80.1407(c) and (e), or the exporter's volume of each category of exported renewable fuel identified in § 80.1430(b)(1) through (b)(4).

(B) RVOs.

(C) RINs used for compliance.

(ii) Obtain documentation of any volumes of renewable fuel used in products listed in § 80.1407(c) and (e) at the refinery or import facility or exported during the reporting year; compute and report as a finding the total volumes of renewable fuel represented in these documents.

(iii) For obligated parties, compare the volumes of products listed in § 80.1407(c) and (e) reported to EPA in the report required under § 80.1451(a)(1) with the volumes, excluding any renewable fuel volumes, contained in the inventory reconciliation analysis under § 80.133 and the volume of non-renewable diesel produced or imported. Verify that the volumes reported to EPA agree with the volumes in the inventory reconciliation analysis and the volumes of non-renewable diesel produced or imported, and report as a finding any exception.

(iv) For exporters, perform all of the following:

(A) Obtain the database, spreadsheet, or other documentation that the exporter maintains for all exported renewable fuel.

(B) Compare the volume of products identified in these documents with the volumes reported to EPA.

(C) Verify that the volumes reported to EPA agree with the volumes identified in the database, spreadsheet, or other documentation, and report as a finding any exception.

(D) Select sample batches in accordance with the guidelines in § 80.127 from each separate category of renewable fuel exported and identified in § 80.1451(a); obtain invoices, bills of lading and other documentation for the representative samples; state whether any of these documents refer to the exported fuel as advanced biofuel or cellulosic biofuel; and report as a finding whether or not the exporter calculated

an advanced biofuel or cellulosic biofuel RVO for these fuels pursuant to § 80.1430(b)(1) or § 80.1430(b)(3).

(v) Compute and report as a finding the obligated party's or exporter's RVOs, and any deficit RVOs carried over from the previous year or carried into the subsequent year, and verify that the values agree with the values reported to EPA.

(vi) Obtain the database, spreadsheet, or other documentation for all RINs by type of renewable fuel used for compliance during the year being reviewed; calculate the total number of RINs associated with each type of renewable fuel used for compliance by year of generation represented in these documents; state whether this information agrees with the report to EPA and report as a finding any exceptions.

(2) *RIN transaction reports and product transfer documents.*—(i) Obtain and read copies of a representative sample, selected in accordance with the guidelines in § 80.127, of each RIN transaction type (RINs purchased, RINs sold, RINs retired, RINs separated, RINs reinstated) included in the RIN transaction reports required under § 80.1451(a)(2) for the compliance year.

(ii) Obtain contracts, invoices, or other documentation for the representative samples of RIN transactions; compute the transaction types, transaction dates, and RINs traded; state whether the information agrees with the party's reports to EPA and report as a finding any exceptions.

(iii) Verify that the product transfer documents for the representative samples under paragraph (a)(2)(i) of this section of RINs sold and the RINs purchased contain the applicable information required under § 80.1453 and report as a finding any product transfer document that does not contain the required information.

(iv) Verify the accuracy of the information contained in the product transfer documents reviewed pursuant to paragraph (a)(2)(iii) of this section and report as a finding any exceptions.

(3) *RIN activity reports.*—(i) Obtain and read copies of all quarterly RIN activity reports required under § 80.1451(a)(3) for the compliance year.

(ii) Obtain the database, spreadsheet, or other documentation used to generate the information in the RIN activity reports; compare the RIN transaction samples reviewed under paragraph (a)(2) of this section with the corresponding entries in the database or spreadsheet and report as a finding any discrepancies; compute the total number of current-year and prior-year RINs owned at the start and end of each quarter, purchased, separated, sold, retired and reinstated, and for parties that reported RIN activity for RINs assigned to a volume of renewable fuel, the volume and type of renewable fuel (as defined in § 80.1401) owned at the end of each quarter; as represented in these documents; and state whether this information agrees with the party's reports to EPA.

(b) *Renewable fuel producers and RIN-generating importers.* The following attest procedures shall be completed for any RIN-generating renewable fuel producer or importer:

(1) *RIN generation reports.* (i) Obtain and read copies of the reports required under § 80.1451(b)(1), (e), and (d) for the compliance year.

(ii) Obtain production data for each renewable fuel batch by type of renewable fuel that was produced or imported during the year being reviewed; compute the RIN numbers, production dates, types, volumes of denaturant and applicable equivalence values, and production volumes for each batch; report the total RINs generated during the year being reviewed; and state whether this information agrees with the party's reports to EPA. Report as a finding any exceptions.

(iii) Verify that the proper number of RINs were generated and assigned pursuant to the requirements of § 80.1426 for each batch of renewable fuel produced or imported. For RINs generated for ethanol produced from corn starch at a facility using a pathway in Table 1 to § 80.1426 that requires the use of one or more of the advanced technologies listed in Table 2 to § 80.1426, verify that the required advanced technology or technologies were employed in accordance with the specifications in Tables 1 and 2 to § 80.1426, including any requirement for application to 90% of the production on a calendar year basis.

(iv) Obtain product transfer documents for a representative sample, selected in accordance with the guidelines in § 80.127, of renewable fuel batches produced or imported during the year being reviewed; verify that the product transfer documents contain the applicable information required under § 80.1453; verify the accuracy of the information contained in the product transfer documents; report as a finding any product transfer document that does not contain the applicable information required under § 80.1453.

(v)(A) Obtain documentation, as required under § 80.1451(b), (d), and (e) associated with feedstock purchases for a representative sample, selected in accordance with the guidelines in § 80.127, of renewable fuel batches produced or imported during the year being reviewed.

(B) Verify that feedstocks were properly identified in the reports and met the definition of renewable biomass in § 80.1401.

(2) *RIN transaction reports and product transfer documents.* (i) Obtain and read copies of a representative sample, selected in accordance with the guidelines in § 80.127, of each transaction type (RINs purchased, RINs sold, RINs retired, RINs separated, RINs reinstated) included in the RIN transaction reports required under § 80.1451(b)(2) for the compliance year.

(ii) Obtain contracts, invoices, or other documentation for the representative samples of RIN transactions; compute the transaction types, transaction dates, and the RINs traded; state whether this information agrees with the party's reports to EPA and report as a finding any exceptions.

(iii) Verify that the product transfer documents for the representative samples under paragraph (b)(2)(i) of this section of RINs sold and the RINs purchased contain the applicable information required under § 80.1453 and report as a finding any product transfer document that does not contain the required information.

(iv) Verify the accuracy of the information contained in the product transfer documents reviewed pursuant to paragraph (b)(2)(iii) of this section and report as a finding any exceptions.

(3) *RIN activity reports.*—(i) Obtain and read copies of the quarterly RIN activity reports required under § 80.1451(b)(3) for the compliance year.

(ii) Obtain the database, spreadsheet, or other documentation used to generate the information in the RIN activity reports; compare the RIN transaction samples reviewed under paragraph (b)(2) of this section with the corresponding entries in the database or spreadsheet and report as a finding any discrepancies; report the total number of each RIN generated during each quarter and compute and report the total number of current-year and prior-year RINs owned at the start and end of each quarter, purchased, separated, sold, retired and reinstated, and for parties that reported RIN activity for RINs assigned to a volume of renewable fuel, the volume of renewable fuel owned at the end of each quarter, as represented in these documents; and state whether this information agrees with the party's reports to EPA.

(4) *Independent Third Party Engineering Review.*—(i) Obtain documentation of independent third party engineering reviews required under § 80.1450(b)(2).

(ii) Review and verify the written verification and records generated as part of the independent third party engineering review.

(c) *Other parties owning RINs.* The following attest procedures shall be completed for any party other than an obligated party or renewable fuel producer or importer that owns any RINs during a calendar year:

(1) *RIN transaction reports and product transfer documents.* (i) Obtain and read copies of a representative sample, selected in accordance with the guidelines in § 80.127, of each RIN transaction type (RINs purchased, RINs sold, RINs retired, RINs separated, RINs reinstated) included in the RIN transaction reports required under § 80.1451(c)(1) for the compliance year.

(ii) Obtain contracts, invoices, or other documentation for the representative samples of RIN transactions; compute the transaction types, transaction dates, and the RINs traded; state whether this information agrees with the party's reports to EPA and report as a finding any exceptions.

(iii) Verify that the product transfer documents for the representative samples under paragraph (c)(1)(i) of this section of RINs sold and RINs purchased contain the applicable information required under § 80.1453 and report as a finding any product transfer document that does not contain the required information.

(iv) Verify the accuracy of the information contained in the product transfer documents reviewed pursuant to paragraph (c)(1)(iii) of this section and report as a finding any exceptions.

(2) *RIN activity reports.* (i) Obtain and read copies of the quarterly RIN activity reports required under § 80.1451(c)(2) for the compliance year.

(ii) Obtain the database, spreadsheet, or other documentation used to generate the information in the RIN activity reports; compare the RIN transaction samples reviewed under paragraph (c)(1) of this section with the corresponding entries in the database or spreadsheet and report as a finding any discrepancies; compute the total number of current-year and prior-year RINs owned at the start and end of each quarter, purchased, sold, retired, separated, and reinstated and for parties that reported RIN activity for RINs assigned to a volume of renewable fuel, the volume of renewable fuel owned at the end of each quarter, as represented in these documents; and state whether this information agrees with the party's reports to EPA.

(d) For each compliance year, each party subject to the attest engagement requirements under this section shall cause the reports required under this section to be submitted to EPA by May 31 of the year following the compliance year.

(e) The party conducting the procedures under this section shall obtain a written representation from a company representative that the copies of the reports required under this section are complete and accurate copies of the reports filed with EPA.

(f) The party conducting the procedures under this section shall identify and report as a finding the commercial computer program used by the party to track the data required by the regulations in this subpart, if any.

[75 FR 14863, Mar. 26, 2010, as amended at 75 FR 26048, May 10, 2010; 75 FR 79978, Dec. 21, 2010; 77 FR 1357, Jan. 9, 2012]

§ 80.1465 What are the additional requirements under this subpart for foreign small refiners, foreign small refineries, and importers of RFS–FRFUEL?

(a) *Definitions.* The following additional definitions apply for this subpart:

(1) *Foreign refinery* is a refinery that is located outside the United States, the Commonwealth of Puerto Rico, the U.S. Virgin Islands, Guam, American Samoa, and the Commonwealth of the Northern Mariana Islands (collectively referred to in this section as ''the United States'').

(2) *Foreign refiner* is a person that meets the definition of refiner under § 80.2(i) for a foreign refinery.

(3) *Foreign small refinery* is a foreign refinery that has received a small refinery exemption under § 80.1441.

(4) *Foreign small refiner* is a foreign refiner that has received a small refiner exemption under § 80.1442.

(5) *RFS–FRFUEL* is transportation fuel produced at a foreign refinery that has received a small refinery exemption under § 80.1441 or by a foreign refiner with a small refiner exemption under § 80.1442.

(6) *Non-RFS–FRFUEL* is transportation fuel produced at a foreign refinery that has not received a small refinery exemption under § 80.1441 or by a foreign refiner that has not received a small refiner exemption under § 80.1442.

(b) *General requirements for RFS–FRFUEL for foreign small refineries and small refiners.* A foreign refiner must do all the following:

(1) Designate, at the time of production, each batch of transportation fuel produced at the foreign refinery that is exported for use in the United States as RFS–FRFUEL.

(2) Meet all requirements that apply to refiners who have received a small refinery or small refiner exemption under this subpart.

(c) *Designation, foreign small refiner certification, and product transfer documents.*

(1) Any foreign small refiner must designate each batch of RFS–FRFUEL as such at the time the transportation fuel is produced.

(2) On each occasion when RFS–FRFUEL is loaded onto a vessel or other transportation mode for transport to the United States, the foreign small refiner shall prepare a certification for each batch of RFS–FRFUEL that meets all the following requirements:

(i) The certification shall include the report of the independent third party under paragraph (d) of this section, and all the following additional information:

(A) The name and EPA registration number of the refinery that produced the RFS–FRFUEL.

(B) [Reserved]

(ii) The identification of the transportation fuel as RFS–FRFUEL.

(iii) The volume of RFS–FRFUEL being transported, in gallons.

(3) On each occasion when any person transfers custody or title to any RFS–FRFUEL prior to its being imported into the United States, it must include all the following information as part of the product transfer document information:

(i) Designation of the transportation fuel as RFS–FRFUEL.

(ii) The certification required under paragraph (c)(2) of this section.

(d) *Load port independent testing and refinery identification.* (1) On each occasion that RFS–FRFUEL is loaded onto a vessel for transport to the United States the foreign small refiner shall have an independent third party do all the following:

(i) Inspect the vessel prior to loading and determine the volume of any tank bottoms.

(ii) Determine the volume of RFS–FRFUEL loaded onto the vessel, temperature-corrected to 60 °F (exclusive of any tank bottoms before loading).

(iii) Obtain the EPA-assigned registration number of the foreign refinery.

(iv) Determine the name and country of registration of the vessel used to transport the RFS–FRFUEL to the United States.

(v) Determine the date and time the vessel departs the port serving the foreign refinery.

(vi) Review original documents that reflect movement and storage of the RFS–FRFUEL from the foreign refinery to the load port, and from this review determine:

(A) The refinery at which the RFS–FRFUEL was produced; and

(B) That the RFS–FRFUEL remained segregated from Non-RFS–FRFUEL and other RFS–FRFUEL produced at a different refinery.

(2) The independent third party shall submit a report to all the following:

(i) The foreign small refiner or owner of the foreign small refinery, containing the information required under paragraph (d)(1) of this section, to accompany the product transfer documents for the vessel.

(ii) The Administrator, containing the information required under paragraph (d)(1) of this section, within thirty days following the date of the independent third party's inspection. This report shall include a description of the method used to determine the identity of the refinery at which the transportation fuel was produced, assurance that the transportation fuel remained segregated as specified in paragraph (j)(1) of this section, and a description of the transportation fuel's movement and storage between production at the source refinery and vessel loading.

(3) The independent third party must do all the following:

(i) Be approved in advance by EPA, based on a demonstration of ability to perform the procedures required in this paragraph (d).

(ii) Be independent under the criteria specified in § 80.65(f)(2)(iii).

(iii) Sign a commitment that contains the provisions specified in paragraph (f) of this section with regard to activities, facilities, and documents relevant to compliance with the requirements of this paragraph (d).

(e) *Comparison of load port and port of entry testing.* (1)(i) Any foreign small refiner or foreign small refinery and any United States importer of RFS–FRFUEL shall compare the results from the load port testing under paragraph (d) of this section, with the port

of entry testing as reported under paragraph (k) of this section, for the volume of transportation fuel, except as specified in paragraph (e)(1)(ii) of this section.

(ii) Where a vessel transporting RFS–FRFUEL offloads this transportation fuel at more than one United States port of entry, the requirements of paragraph (e)(1)(i) of this section do not apply at subsequent ports of entry if the United States importer obtains a certification from the vessel owner that the requirements of paragraph (e)(1)(i) of this section were met and that the vessel has not loaded any transportation fuel or blendstock between the first United States port of entry and any subsequent port of entry.

(2) If the temperature-corrected volumes determined at the port of entry and at the load port differ by more than one percent, the United States importer and the foreign small refiner or foreign small refinery shall not treat the transportation fuel as RFS–FRFUEL and the importer shall include the volume of transportation fuel in the importer's RFS compliance calculations.

(f) *Foreign refiner commitments.* Any foreign small refinery or foreign small refiner shall commit to and comply with the provisions contained in this paragraph (f) as a condition to being approved for a small refinery or small refiner exemption under this subpart.

(1) Any United States Environmental Protection Agency inspector or auditor must be given full, complete, and immediate access to conduct inspections and audits of the foreign refinery.

(i) Inspections and audits may be either announced in advance by EPA, or unannounced.

(ii) Access will be provided to any location where:

(A) Transportation fuel is produced;

(B) Documents related to refinery operations are kept; and

(C) RFS–FRFUEL is stored or transported between the foreign refinery and the United States, including storage tanks, vessels, and pipelines.

(iii) EPA inspectors and auditors may be EPA employees or contractors to EPA.

(iv) Any documents requested that are related to matters covered by inspections and audits must be provided to an EPA inspector or auditor on request.

(v) Inspections and audits may include review and copying of any documents related to all the following:

(A) The volume of RFS–FRFUEL.

(B) The proper classification of transportation fuel as being RFS–FRFUEL or as not being RFS–FRFUEL.

(C) Transfers of title or custody to RFS–FRFUEL.

(D) Testing of RFS–FRFUEL.

(E) Work performed and reports prepared by independent third parties and by independent auditors under the requirements of this section, including work papers.

(vi) Inspections and audits may include interviewing employees.

(vii) Any employee of the foreign refiner must be made available for interview by the EPA inspector or auditor, on request, within a reasonable time period.

(viii) English language translations of any documents must be provided to an EPA inspector or auditor, on request, within 10 working days.

(ix) English language interpreters must be provided to accompany EPA inspectors and auditors, on request.

(2) An agent for service of process located in the District of Columbia shall be named, and service on this agent constitutes service on the foreign refiner or any employee of the foreign refiner for any action by EPA or otherwise by the United States related to the requirements of this subpart.

(3) The forum for any civil or criminal enforcement action related to the provisions of this section for violations of the Clean Air Act or regulations promulgated thereunder shall be governed by the Clean Air Act, including the EPA administrative forum where allowed under the Clean Air Act.

(4) United States substantive and procedural laws shall apply to any civil or criminal enforcement action against the foreign refiner or any employee of the foreign refiner related to the provisions of this section.

(5) Submitting an application for a small refinery or small refiner exemption, or producing and exporting transportation fuel under such exemption, and all other actions to comply with the requirements of this subpart relating to such exemption constitute actions or activities covered by and within the meaning of the provisions of 28 U.S.C. 1605(a)(2), but solely with respect to actions instituted against the foreign refiner, its agents and employees in any court or other tribunal in the United States for conduct that violates the requirements applicable to the foreign refiner under this subpart, including conduct that violates the False Statements Accountability Act of 1996 (18 U.S.C. 1001) and section 113(c)(2) of the Clean Air Act (42 U.S.C. 7413).

(6) The foreign refiner, or its agents or employees, will not seek to detain or to impose civil or criminal remedies against EPA inspectors or auditors, whether EPA employees or EPA contractors, for actions performed within the scope of EPA employment or contract related to the provisions of this section.

(7) The commitment required by this paragraph (f) shall be signed by the owner or president of the foreign refiner business.

(8) In any case where RFS–FRFUEL produced at a foreign refinery is stored or transported by another company between the refinery and the vessel that transports the RFS–FRFUEL to the United States, the foreign refiner shall obtain from each such other company a commitment that meets the requirements specified in paragraphs (f)(1) through (f)(7) of this section, and these commitments shall be included in the foreign refiner's application for a small refinery or small refiner exemption under this subpart.

(g) *Sovereign immunity*. By submitting an application for a small refinery or small refiner exemption under this subpart, or by producing and exporting transportation fuel to the United States under such exemption, the foreign refiner, and its agents and employees, without exception, become subject to the full operation of the administrative and judicial enforcement powers and provisions of the United States without limitation based on sovereign immunity, with respect to actions instituted against the foreign refiner, its agents and employees in any court or other tribunal in the United States for conduct that violates the requirements applicable to the foreign refiner under this subpart, including conduct that violates the False Statements Accountability Act of 1996 (18 U.S.C. 1001) and section 113(c)(2) of the Clean Air Act (42 U.S.C. 7413).

(h) *Bond posting*. Any foreign refiner shall meet the requirements of this paragraph (h) as a condition to approval of a foreign small refinery or foreign small refiner exemption under this subpart.

(1) The foreign refiner shall post a bond of the amount calculated using the following equation:

$$\text{Bond} = G * \$\,0.01$$

Where:

Bond = amount of the bond in United States dollars.

G = the largest volume of transportation fuel produced at the foreign refinery and exported to the United States, in gallons, during a single calendar year among the most recent of the following calendar years, up to a maximum of five calendar years: the calendar year immediately preceding the date the refinery's or refiner's application is submitted, the calendar year the application is submitted, and each succeeding calendar year.

(2) Bonds shall be posted by any of the following methods:

(i) Paying the amount of the bond to the Treasurer of the United States.

(ii) Obtaining a bond in the proper amount from a third party surety agent that is payable to satisfy United States administrative or judicial judgments against the foreign refiner, provided EPA agrees in advance as to the third party and the nature of the surety agreement.

(3) Bonds posted under this paragraph (h) shall:

(i) Be used to satisfy any judicial judgment that results from an administrative or judicial enforcement action for conduct in violation of this subpart, including where such conduct violates the False Statements Accountability Act of 1996 (18 U.S.C. 1001) and section 113(c)(2) of the Clean Air Act (42 U.S.C. 7413);

(ii) Be provided by a corporate surety that is listed in the United States Department of Treasury Circular 570 ''Companies Holding Certificates of Authority as Acceptable Sureties on Federal Bonds''; and

(iii) Include a commitment that the bond will remain in effect for at least five years following the end of latest annual reporting period that the foreign refiner produces transportation fuel pursuant to the requirements of this subpart.

(4) On any occasion a foreign refiner bond is used to satisfy any judgment, the foreign refiner shall increase the bond to cover the amount used within 90 days of the date the bond is used.

(5) If the bond amount for a foreign refiner increases, the foreign refiner shall increase the bond to cover the shortfall within 90 days of the date the bond amount changes. If the bond amount decreases, the foreign refiner may reduce the amount of the bond beginning 90 days after the date the bond amount changes.

(i) *English language reports.* Any document submitted to EPA by a foreign refiner shall be in English, or shall include an English language translation.

(j) *Prohibitions.*—(1) No person may combine RFS–FRFUEL with any Non-RFS–FRFUEL, and no person may combine RFS–FRFUEL with any RFS–FRFUEL produced at a different refinery, until the importer has met all the requirements of paragraph (k) of this section.

(2) No foreign refiner or other person may cause another person to commit an action prohibited in paragraph (j)(1) of this section, or that otherwise violates the requirements of this section.

(k) *United States importer requirements.* Any United States importer of RFS–FRFUEL shall meet the following requirements:

(1) Each batch of imported RFS–FRFUEL shall be classified by the importer as being RFS–FRFUEL.

(2) Transportation fuel shall be classified as RFS–FRFUEL according to the designation by the foreign refiner if this designation is supported by product transfer documents prepared by the foreign refiner as required in paragraph (c) of this section. Additionally, the importer shall comply with all requirements of this subpart applicable to importers.

(3) For each transportation fuel batch classified as RFS–FRFUEL, any United States importer shall have an independent third party do all the following:

(i) Determine the volume of transportation fuel in the vessel.

(ii) Use the foreign refiner's RFS–FRFUEL certification to determine the name and EPA-assigned registration number of the foreign refinery that produced the RFS–FRFUEL.

(iii) Determine the name and country of registration of the vessel used to transport the RFS–FRFUEL to the United States.

(iv) Determine the date and time the vessel arrives at the United States port of entry.

(4) Any importer shall submit reports within 30 days following the date any vessel transporting RFS–FRFUEL arrives at the United States port of entry to:

(i) The Administrator, containing the information determined under paragraph (k)(3) of this section; and

(ii) The foreign refiner, containing the information determined under paragraph (k)(3)(i) of this section, and including identification of the port at which the product was off loaded.

(5) Any United States importer shall meet all other requirements of this subpart for any imported transportation fuel that is not classified as RFS–FRFUEL under paragraph (k)(2) of this section.

(l) *Truck imports of RFS–FRFUEL produced at a foreign refinery.* (1) Any refiner whose RFS–FRFUEL is transported into the United States by truck may petition EPA to use alternative procedures to meet all the following requirements:

(i) Certification under paragraph (c)(2) of this section.

(ii) Load port and port of entry testing requirements under paragraphs (d) and (e) of this section.

(iii) Importer testing requirements under paragraph (k)(3) of this section.

(2) These alternative procedures must ensure RFS–FRFUEL remains segregated from Non-RFS–FRFUEL until it is imported into the United States. The petition will be evaluated based on

whether it adequately addresses all the following:

(i) Provisions for monitoring pipeline shipments, if applicable, from the refinery, that ensure segregation of RFS–FRFUEL from that refinery from all other transportation fuel.

(ii) Contracts with any terminals and/or pipelines that receive and/or transport RFS–FRFUEL that prohibit the commingling of RFS–FRFUEL with Non-RFS–FRFUEL or RFS–FRFUEL from other foreign refineries.

(iii) Attest procedures to be conducted annually by an independent third party that review loading records and import documents based on volume reconciliation, or other criteria, to confirm that all RFS–FRFUEL remains segregated throughout the distribution system.

(3) The petition described in this section must be submitted to EPA along with the application for a small refinery or small refiner exemption under this subpart.

(m) *Additional attest requirements for importers of RFS–FRFUEL.* The following additional procedures shall be carried out by any importer of RFS–FRFUEL as part of the attest engagement required for importers under this subpart M.

(1) Obtain listings of all tenders of RFS–FRFUEL. Agree the total volume of tenders from the listings to the transportation fuel inventory reconciliation analysis required in § 80.133(b), and to the volumes determined by the third party under paragraph (d) of this section.

(2) For each tender under paragraph (m)(1) of this section, where the transportation fuel is loaded onto a marine vessel, report as a finding the name and country of registration of each vessel, and the volumes of RFS–FRFUEL loaded onto each vessel.

(3) Select a sample from the list of vessels identified per paragraph (m)(2) of this section used to transport RFS–FRFUEL, in accordance with the guidelines in § 80.127, and for each vessel selected perform all the following:

(i) Obtain the report of the independent third party, under paragraph (d) of this section.

(A) Agree the information in these reports with regard to vessel identification and transportation fuel volume.

(B) Identify, and report as a finding, each occasion the load port and port of entry volume results differ by more than the amount allowed in paragraph (e)(2) of this section, and determine whether all of the requirements of paragraph (e)(2) of this section have been met.

(ii) Obtain the documents used by the independent third party to determine transportation and storage of the RFS–FRFUEL from the refinery to the load port, under paragraph (d) of this section. Obtain tank activity records for any storage tank where the RFS–FRFUEL is stored, and pipeline activity records for any pipeline used to transport the RFS–FRFUEL prior to being loaded onto the vessel. Use these records to determine whether the RFS–FRFUEL was produced at the refinery that is the subject of the attest engagement, and whether the RFS–FRFUEL was mixed with any Non-RFS–FRFUEL or any RFS–FRFUEL produced at a different refinery.

(4) Select a sample from the list of vessels identified per paragraph (m)(2) of this section used to transport RFS–FRFUEL, in accordance with the guidelines in § 80.127, and for each vessel selected perform all of the following:

(i) Obtain a commercial document of general circulation that lists vessel arrivals and departures, and that includes the port and date of departure of the vessel, and the port of entry and date of arrival of the vessel.

(ii) Agree the vessel's departure and arrival locations and dates from the independent third party and United States importer reports to the information contained in the commercial document.

(5) Obtain separate listings of all tenders of RFS–FRFUEL, and perform all the following:

(i) Agree the volume of tenders from the listings to the transportation fuel inventory reconciliation analysis in § 80.133(b).

(ii) Obtain a separate listing of the tenders under this paragraph (m)(5) where the transportation fuel is loaded onto a marine vessel. Select a sample

from this listing in accordance with the guidelines in § 80.127, and obtain a commercial document of general circulation that lists vessel arrivals and departures, and that includes the port and date of departure and the ports and dates where the transportation fuel was off loaded for the selected vessels. Determine and report as a finding the country where the transportation fuel was off loaded for each vessel selected.

(6) In order to complete the requirements of this paragraph (m), an auditor shall do all the following:

(i) Be independent of the foreign refiner or importer.

(ii) Be licensed as a Certified Public Accountant in the United States and a citizen of the United States, or be approved in advance by EPA based on a demonstration of ability to perform the procedures required in §§ 80.125 through 80.127, 80.130, 80.1464, and this paragraph (m).

(iii) Sign a commitment that contains the provisions specified in paragraph (f) of this section with regard to activities and documents relevant to compliance with the requirements of §§ 80.125 through 80.127, 80.130, 80.1464, and this paragraph (m).

(n) *Withdrawal or suspension of foreign small refiner or foreign small refinery status.* EPA may withdraw or suspend a foreign refiner's small refinery or small refiner exemption where:

(1) A foreign refiner fails to meet any requirement of this section;

(2) A foreign government fails to allow EPA inspections as provided in paragraph (f)(1) of this section;

(3) A foreign refiner asserts a claim of, or a right to claim, sovereign immunity in an action to enforce the requirements in this subpart; or

(4) A foreign refiner fails to pay a civil or criminal penalty that is not satisfied using the foreign refiner bond specified in paragraph (h) of this section.

(o) *Additional requirements for applications, reports and certificates.* Any application for a small refinery or small refiner exemption, alternative procedures under paragraph (l) of this section, any report, certification, or other submission required under this section shall be:

(1) Submitted in accordance with procedures specified by the Administrator, including use of any forms that may be specified by the Administrator.

(2) Signed by the president or owner of the foreign refiner company, or by that person's immediate designee, and shall contain the following declaration: ''I hereby certify: (1) That I have actual authority to sign on behalf of and to bind [insert name of foreign refiner] with regard to all statements contained herein; (2) that I am aware that the information contained herein is being Certified, or submitted to the United States Environmental Protection Agency, under the requirements of 40 CFR part 80, subpart M, and that the information is material for determining compliance under these regulations; and (3) that I have read and understand the information being Certified or submitted, and this information is true, complete and correct to the best of my knowledge and belief after I have taken reasonable and appropriate steps to verify the accuracy thereof. I affirm that I have read and understand the provisions of 40 CFR part 80, subpart M, including 40 CFR 80.1465 apply to [INSERT NAME OF FOREIGN REFINER]. Pursuant to Clean Air Act section 113(c) and 18 U.S.C. 1001, the penalty for furnishing false, incomplete or misleading information in this certification or submission is a fine of up to $10,000 U.S., and/or imprisonment for up to five years.''

[75 FR 14863, Mar. 26, 2010, as amended at 75 FR 26048, May 10, 2010; 77 FR 1357, Jan. 9, 2012]

§ 80.1466 What are the additional requirements under this subpart for RIN- generating foreign producers and importers of renewable fuels for which RINs have been generated by the foreign producer?

(a) *Foreign producer of renewable fuel.* For purposes of this subpart, a foreign producer of renewable fuel is a person located outside the United States, the Commonwealth of Puerto Rico, the Virgin Islands, Guam, American Samoa, and the Commonwealth of the Northern Mariana Islands (collectively referred to in this section as ''the United States'') that has been approved by EPA to generate RINs for renewable

fuel it produces for export to the United States, hereinafter referred to as a ''foreign producer'' under this section.

(b) *General requirements.* An approved foreign producer under this section must meet all requirements that apply to renewable fuel producers under this subpart.

(c) *Designation, foreign producer certification, and product transfer documents.* (1) Any approved foreign producer under this section that generates RINs for renewable fuel must designate each batch of such renewable fuel as ''RFS–FRRF'' at the time the renewable fuel is produced.

(2) On each occasion when RFS–FRRF is transferred for transport to a vessel or loaded onto a vessel or other transportation mode for transport to the United States, the RIN-generating foreign producer shall prepare a certification for each batch of RFS–FRRF; the certification shall include the report of the independent third party under paragraph (d) of this section, and all the following additional information:

(i) The name and EPA registration number of the company that produced the RFS–FRRF.

(ii) The identification of the renewable fuel as RFS–FRRF.

(iii) The identification of the renewable fuel by type, D code, and number of RINs generated.

(iv) The volume of RFS–FRRF, standardized per § 80.1426(f)(8), being transported, in gallons.

(3) On each occasion when any person transfers custody or title to any RFS–FRRF prior to its being imported into the United States, it must include all the following information as part of the product transfer document information:

(i) Designation of the renewable fuel as RFS–FRRF.

(ii) The certification required under paragraph (c)(2) of this section.

(d) *Load port independent testing and producer identification.* (1) On each occasion that RFS–FRRF is loaded onto a vessel for transport to the United States the RIN-generating foreign producer shall have an independent third party do all the following:

(i) Inspect the vessel prior to loading and determine the volume of any tank bottoms.

(ii) Determine the volume of RFS–FRRF, standardized per § 80.1426(f)(8), loaded onto the vessel (exclusive of any tank bottoms before loading).

(iii) Obtain the EPA-assigned registration number of the foreign producer.

(iv) Determine the name and country of registration of the vessel used to transport the RFS–FRRF to the United States.

(v) Determine the date and time the vessel departs the port serving the foreign producer.

(vi) Review original documents that reflect movement and storage of the RFS–FRRF from the RIN-generating foreign producer to the load port, and from this review determine all the following:

(A) The facility at which the RFS–FRRF was produced.

(B) That the RFS–FRRF remained segregated from Non-RFS–FRRF and other RFS–FRRF produced by a different foreign producer.

(2) The independent third party shall submit a report to the following:

(i) The RIN-generating foreign producer, containing the information required under paragraph (d)(1) of this section, to accompany the product transfer documents for the vessel.

(ii) The Administrator, containing the information required under paragraph (d)(1) of this section, within thirty days following the date of the independent third party's inspection. This report shall include a description of the method used to determine the identity of the foreign producer facility at which the renewable fuel was produced, assurance that the renewable fuel remained segregated as specified in paragraph (j)(1) of this section, and a description of the renewable fuel's movement and storage between production at the source facility and vessel loading.

(3) The independent third party must:

(i) Be approved in advance by EPA, based on a demonstration of ability to perform the procedures required in this paragraph (d);

(ii) Be independent under the criteria specified in § 80.65(e)(2)(iii); and

(iii) Sign a commitment that contains the provisions specified in paragraph (f) of this section with regard to activities, facilities and documents relevant to compliance with the requirements of this paragraph (d).

(e) *Comparison of load port and port of entry testing.* (1)(i) Any RIN-generating foreign producer and any United States importer of RFS–FRRF shall compare the results from the load port testing under paragraph (d) of this section, with the port of entry testing as reported under paragraph (k) of this section, for the volume of renewable fuel, standardized per § 80.1426(f)(8), except as specified in paragraph (e)(1)(ii) of this section.

(ii) Where a vessel transporting RFS–FRRF offloads the renewable fuel at more than one United States port of entry, the requirements of paragraph (e)(1)(i) of this section do not apply at subsequent ports of entry if the United States importer obtains a certification from the vessel owner that the requirements of paragraph (e)(1)(i) of this section were met and that the vessel has not loaded any renewable fuel between the first United States port of entry and the subsequent ports of entry.

(2)(i) If the temperature-corrected volumes, after accounting for tank bottoms, determined at the port of entry and at the load port differ by more than one percent, the number of RINs associated with the renewable fuel shall be calculated based on the lesser of the two volumes in paragraph (e)(1)(i) of this section.

(ii) Where the port of entry volume is the lesser of the two volumes in paragraph (e)(1)(i) of this section, the importer shall calculate the difference between the number of RINs originally assigned by the foreign producer and the number of RINs calculated under § 80.1426 for the volume of renewable fuel as measured at the port of entry, and acquire and retire that amount of RINs in accordance with paragraph (k)(3) of this section.

(f) *Foreign producer commitments.* Any RIN-generating foreign producer shall commit to and comply with the provisions contained in this paragraph (f) as a condition to being approved as a foreign producer under this subpart.

(1) Any United States Environmental Protection Agency inspector or auditor must be given full, complete, and immediate access to conduct inspections and audits of the foreign producer facility.

(i) Inspections and audits may be either announced in advance by EPA, or unannounced.

(ii) Access will be provided to any location where:

(A) Renewable fuel is produced;

(B) Documents related to renewable fuel producer operations are kept; and

(C) RFS–FRRF is stored or transported between the foreign producer and the United States, including storage tanks, vessels and pipelines.

(iii) EPA inspectors and auditors may be EPA employees or contractors to EPA.

(iv) Any documents requested that are related to matters covered by inspections and audits must be provided to an EPA inspector or auditor on request.

(v) Inspections and audits may include review and copying of any documents related to the following:

(A) The volume of RFS–FRRF.

(B) The proper classification of renewable fuel as being RFS–FRRF.

(C) Transfers of title or custody to RFS–FRRF.

(D) Work performed and reports prepared by independent third parties and by independent auditors under the requirements of this section, including work papers.

(vi) Inspections and audits by EPA may include interviewing employees.

(vii) Any employee of the foreign producer must be made available for interview by the EPA inspector or auditor, on request, within a reasonable time period.

(viii) English language translations of any documents must be provided to an EPA inspector or auditor, on request, within 10 working days.

(ix) English language interpreters must be provided to accompany EPA inspectors and auditors, on request.

(2) An agent for service of process located in the District of Columbia shall be named, and service on this agent constitutes service on the foreign producer or any employee of the foreign

producer for any action by EPA or otherwise by the United States related to the requirements of this subpart.

(3) The forum for any civil or criminal enforcement action related to the provisions of this section for violations of the Clean Air Act or regulations promulgated thereunder shall be governed by the Clean Air Act, including the EPA administrative forum where allowed under the Clean Air Act.

(4) United States substantive and procedural laws shall apply to any civil or criminal enforcement action against the foreign producer or any employee of the foreign producer related to the provisions of this section.

(5) Applying to be an approved foreign producer under this section, or producing or exporting renewable fuel under such approval, and all other actions to comply with the requirements of this subpart relating to such approval constitute actions or activities covered by and within the meaning of the provisions of 28 U.S.C. 1605(a)(2), but solely with respect to actions instituted against the foreign producer, its agents and employees in any court or other tribunal in the United States for conduct that violates the requirements applicable to the foreign producer under this subpart, including conduct that violates the False Statements Accountability Act of 1996 (18 U.S.C. 1001) and section 113(c)(2) of the Clean Air Act (42 U.S.C. 7413).

(6) The foreign producer, or its agents or employees, will not seek to detain or to impose civil or criminal remedies against EPA inspectors or auditors for actions performed within the scope of EPA employment or contract related to the provisions of this section.

(7) The commitment required by this paragraph (f) shall be signed by the owner or president of the foreign producer company.

(8) In any case where RFS–FRRF produced at a foreign producer facility is stored or transported by another company between the production facility and the vessel that transports the RFS–FRRF to the United States, the foreign producer shall obtain from each such other company a commitment that meets the requirements specified in paragraphs (f)(1) through (7) of this section, and these commitments shall be included in the foreign producer's application to be an approved foreign producer under this subpart.

(g) *Sovereign immunity*. By submitting an application to be an approved foreign producer under this subpart, or by producing and exporting renewable fuel to the United States under such approval, the foreign producer, and its agents and employees, without exception, become subject to the full operation of the administrative and judicial enforcement powers and provisions of the United States without limitation based on sovereign immunity, with respect to actions instituted against the foreign producer, its agents and employees in any court or other tribunal in the United States for conduct that violates the requirements applicable to the foreign producer under this subpart, including conduct that violates the False Statements Accountability Act of 1996 (18 U.S.C. 1001) and section 113(c)(2) of the Clean Air Act (42 U.S.C. 7413).

(h) *Bond posting*. Any RIN-generating foreign producer shall meet the requirements of this paragraph (h) as a condition to approval as a foreign producer under this subpart.

(1) The RIN-generating foreign producer shall post a bond of the amount calculated using the following equation

$$\text{Bond} = G * \$0.01$$

Where

Bond = amount of the bond in U.S. dollars.

G = the greater of: the largest volume of renewable fuel produced by the foreign producer and exported to the United States, in gallons, during a single calendar year among the five preceding calendar years, or the largest volume of renewable fuel that the foreign producers expects to export to the Unites States during any calendar year identified in the Production Outlook Report required by § 80.1449. If the volume of renewable fuel exported to the United States increases above the largest volume identified in the Production Outlook Report during any calendar year, the foreign producer shall increase the bond to cover the shortfall within 90 days.

(2) Bonds shall be posted by any of the following methods:

(i) Paying the amount of the bond to the Treasurer of the United States.

(ii) Obtaining a bond in the proper amount from a third party surety

agent that is payable to satisfy United States administrative or judicial judgments against the foreign producer, provided EPA agrees in advance as to the third party and the nature of the surety agreement.

(3) Bonds posted under this paragraph (h) shall:

(i) Be used to satisfy any judicial judgment that results from an administrative or judicial enforcement action for conduct in violation of this subpart, including where such conduct violates the False Statements Accountability Act of 1996 (18 U.S.C. 1001) and section 113(c)(2) of the Clean Air Act (42 U.S.C. 7413);

(ii) Be provided by a corporate surety that is listed in the United States Department of Treasury Circular 570 ''Companies Holding Certificates of Authority as Acceptable Sureties on Federal Bonds''; and

(iii) Include a commitment that the bond will remain in effect for at least five years following the end of latest annual reporting period that the foreign producer produces renewable fuel pursuant to the requirements of this subpart.

(4) On any occasion a foreign producer bond is used to satisfy any judgment, the foreign producer shall increase the bond to cover the amount used within 90 days of the date the bond is used.

(i) *English language reports.* Any document submitted to EPA by a foreign producer shall be in English, or shall include an English language translation.

(j) *Prohibitions.* (1) No person may combine RFS–FRRF with any Non-RFS–FRRF, and no person may combine RFS–FRRF with any RFS–FRRF produced at a different production facility, until the importer has met all the requirements of paragraph (k) of this section.

(2) No foreign producer or other person may cause another person to commit an action prohibited in paragraph (j)(1) of this section, or that otherwise violates the requirements of this section.

(3) No foreign producer and importer may generate RINs for the same volume of renewable fuel.

(4) A foreign producer of renewable fuel is prohibited from generating RINs in excess of the number for which the bond requirements of this section have been satisfied.

(k) *Requirements for United States importers of RFS–FRRF.* Any United States importers of RFS–FRRF shall meet all the following requirements:

(1) Renewable fuel shall be classified as RFS–FRRF according to the designation by the foreign producer if this designation is supported by product transfer documents prepared by the foreign producer as required in paragraph (c) of this section.

(2) For each renewable fuel batch classified as RFS–FRRF, any United States importer shall have an independent third party do all the following:

(i) Determine the volume of renewable fuel, standardized per § 80.1426(f)(8), in the vessel.

(ii) Use the foreign producer's RFS–FRRF certification to determine the name and EPA-assigned registration number of the foreign producer that produced the RFS–FRRF.

(iii) Determine the name and country of registration of the vessel used to transport the RFS–FRRF to the United States.

(iv) Determine the date and time the vessel arrives at the United States port of entry.

(3) Where the importer is required to retire RINs under paragraph (e)(2) of this section, the importer must report the retired RINs in the applicable reports under § 80.1451.

(4) Any importer shall submit reports within 30 days following the date any vessel transporting RFS–FRRF arrives at the United States port of entry to all the following:

(i) The Administrator, containing the information determined under paragraph (k)(2) of this section.

(ii) The foreign producer, containing the information determined under paragraph (k)(2)(i) of this section, and including identification of the port at which the product was offloaded, and any RINs retired under paragraph (e)(2) of this section.

(5) Any United States importer shall meet all other requirements of this subpart for any imported renewable

fuel that is not classified as RFS–FRRF under paragraph (k)(1) of this section.

(l) *Truck imports of RFS–FRRF produced by a foreign producer.* (1) Any foreign producer whose RFS–FRRF is transported into the United States by truck may petition EPA to use alternative procedures to meet all the following requirements:

(i) Certification under paragraph (c)(2) of this section.

(ii) Load port and port of entry testing under paragraphs (d) and (e) of this section.

(iii) Importer testing under paragraph (k)(2) of this section.

(2) These alternative procedures must ensure RFS–FRRF remains segregated from Non-RFS–FRRF until it is imported into the United States. The petition will be evaluated based on whether it adequately addresses all of the following:

(i) Contracts with any facilities that receive and/or transport RFS–FRRF that prohibit the commingling of RFS–FRRF with Non-RFS–FRRF or RFS–FRRF from other foreign producers.

(ii) Attest procedures to be conducted annually by an independent third party that review loading records and import documents based on volume reconciliation to confirm that all RFS–FRRF remains segregated.

(3) The petition described in this section must be submitted to EPA along with the application for approval as a foreign producer under this subpart.

(m) *Additional attest requirements for producers of RFS–FRRF.* The following additional procedures shall be carried out by any producer of RFS–FRRF as part of the attest engagement required for renewable fuel producers under this subpart M.

(1) Obtain listings of all tenders of RFS–FRRF. Agree the total volume of tenders from the listings to the volumes determined by the third party under paragraph (d) of this section.

(2) For each tender under paragraph (m)(1) of this section, where the renewable fuel is loaded onto a marine vessel, report as a finding the name and country of registration of each vessel, and the volumes of RFS–FRRF loaded onto each vessel.

(3) Select a sample from the list of vessels identified in paragraph (m)(2) of this section used to transport RFS–FRRF, in accordance with the guidelines in § 80.127, and for each vessel selected perform all the following:

(i) Obtain the report of the independent third party, under paragraph (d) of this section, and of the United States importer under paragraph (k) of this section.

(A) Agree the information in these reports with regard to vessel identification and renewable fuel volume.

(B) Identify, and report as a finding, each occasion the load port and port of entry volume results differ by more than the amount allowed in paragraph (e) of this section, and determine whether the importer retired the appropriate amount of RINs as required under paragraph (e)(2) of this section, and submitted the applicable reports under § 80.1451 in accordance with paragraph (k)(4) of this section.

(ii) Obtain the documents used by the independent third party to determine transportation and storage of the RFS–FRRF from the foreign producer's facility to the load port, under paragraph (d) of this section. Obtain tank activity records for any storage tank where the RFS–FRRF is stored, and activity records for any mode of transportation used to transport the RFS–FRRF prior to being loaded onto the vessel. Use these records to determine whether the RFS–FRRF was produced at the foreign producer's facility that is the subject of the attest engagement, and whether the RFS–FRRF was mixed with any Non-RFS–FRRF or any RFS–FRRF produced at a different facility.

(4) Select a sample from the list of vessels identified in paragraph (m)(2) of this section used to transport RFS–FRRF, in accordance with the guidelines in § 80.127, and for each vessel selected perform the following:

(i) Obtain a commercial document of general circulation that lists vessel arrivals and departures, and that includes the port and date of departure of the vessel, and the port of entry and date of arrival of the vessel.

(ii) Agree the vessel's departure and arrival locations and dates from the independent third party and United

States importer reports to the information contained in the commercial document.

(5) Obtain a separate listing of the tenders under this paragraph (m)(5) where the RFS–FRRF is loaded onto a marine vessel. Select a sample from this listing in accordance with the guidelines in § 80.127, and obtain a commercial document of general circulation that lists vessel arrivals and departures, and that includes the port and date of departure and the ports and dates where the renewable fuel was offloaded for the selected vessels. Determine and report as a finding the country where the renewable fuel was offloaded for each vessel selected.

(6) In order to complete the requirements of this paragraph (m) an auditor shall:

(i) Be independent of the foreign producer;

(ii) Be licensed as a Certified Public Accountant in the United States and a citizen of the United States, or be approved in advance by EPA based on a demonstration of ability to perform the procedures required in §§ 80.125 through 80.127, 80.130, 80.1464, and this paragraph (m); and

(iii) Sign a commitment that contains the provisions specified in paragraph (f) of this section with regard to activities and documents relevant to compliance with the requirements of §§ 80.125 through 80.127, 80.130, 80.1464, and this paragraph (m).

(n) *Withdrawal or suspension of foreign producer approval.* EPA may withdraw or suspend a foreign producer's approval where any of the following occur:

(1) A foreign producer fails to meet any requirement of this section.

(2) A foreign government fails to allow EPA inspections or audits as provided in paragraph (f)(1) of this section.

(3) A foreign producer asserts a claim of, or a right to claim, sovereign immunity in an action to enforce the requirements in this subpart.

(4) A foreign producer fails to pay a civil or criminal penalty that is not satisfied using the foreign producer bond specified in paragraph (h) of this section.

(o) *Additional requirements for applications, reports and certificates.* Any application for approval as a foreign producer, alternative procedures under paragraph (l) of this section, any report, certification, or other submission required under this section shall be:

(1) Submitted in accordance with procedures specified by the Administrator, including use of any forms that may be specified by the Administrator.

(2) Signed by the president or owner of the foreign producer company, or by that person's immediate designee, and shall contain the following declaration: ''I hereby certify: (1) That I have actual authority to sign on behalf of and to bind [INSERT NAME OF FOREIGN PRODUCER] with regard to all statements contained herein; (2) that I am aware that the information contained herein is being Certified, or submitted to the United States Environmental Protection Agency, under the requirements of 40 CFR part 80, subpart M, and that the information is material for determining compliance under these regulations; and (3) that I have read and understand the information being Certified or submitted, and this information is true, complete and correct to the best of my knowledge and belief after I have taken reasonable and appropriate steps to verify the accuracy thereof. I affirm that I have read and understand the provisions of 40 CFR part 80, subpart M, including 40 CFR 80.1465 apply to [INSERT NAME OF FOREIGN PRODUCER]. Pursuant to Clean Air Act section 113(c) and 18 U.S.C. 1001, the penalty for furnishing false, incomplete or misleading information in this certification or submission is a fine of up to $10,000 U.S., and/or imprisonment for up to five years.''.

[75 FR 14863, Mar. 26, 2010, as amended at 77 FR 1357, Jan. 9, 2012]

§ 80.1467 What are the additional requirements under this subpart for a foreign RIN owner?

(a) *Foreign RIN owner.* For purposes of this subpart, a foreign RIN owner is a person located outside the United States, the Commonwealth of Puerto Rico, the Virgin Islands, Guam, American Samoa, and the Commonwealth of the Northern Mariana Islands (collectively referred to in this section as ''the United States'') that has been approved by EPA to own RINs.

(b) *General requirement.* An approved foreign RIN owner must meet all requirements that apply to parties who own RINs under this subpart.

(c) *Foreign RIN owner commitments.* Any person shall commit to and comply with the provisions contained in this paragraph (c) as a condition to being approved as a foreign RIN owner under this subpart.

(1) Any United States Environmental Protection Agency inspector or auditor must be given full, complete, and immediate access to conduct inspections and audits of the foreign RIN owner's place of business.

(i) Inspections and audits may be either announced in advance by EPA, or unannounced.

(ii) Access will be provided to any location where documents related to RINs the foreign RIN owner has obtained, sold, transferred or held are kept.

(iii) Inspections and audits may be by EPA employees or contractors to EPA.

(iv) Any documents requested that are related to matters covered by inspections and audits must be provided to an EPA inspector or auditor on request.

(v) Inspections and audits by EPA may include review and copying of any documents related to the following:

(A) Transfers of title to RINs.

(B) Work performed and reports prepared by independent auditors under the requirements of this section, including work papers.

(vi) Inspections and audits by EPA may include interviewing employees.

(vii) Any employee of the foreign RIN owner must be made available for interview by the EPA inspector or auditor, on request, within a reasonable time period.

(viii) English language translations of any documents must be provided to an EPA inspector or auditor, on request, within 10 working days.

(ix) English language interpreters must be provided to accompany EPA inspectors and auditors, on request.

(2) An agent for service of process located in the District of Columbia shall be named, and service on this agent constitutes service on the foreign RIN owner or any employee of the foreign RIN owner for any action by EPA or otherwise by the United States related to the requirements of this subpart.

(3) The forum for any civil or criminal enforcement action related to the provisions of this section for violations of the Clean Air Act or regulations promulgated thereunder shall be governed by the Clean Air Act, including the EPA administrative forum where allowed under the Clean Air Act.

(4) United States substantive and procedural laws shall apply to any civil or criminal enforcement action against the foreign RIN owner or any employee of the foreign RIN owner related to the provisions of this section.

(5) Submitting an application to be a foreign RIN owner, and all other actions to comply with the requirements of this subpart constitute actions or activities covered by and within the meaning of the provisions of 28 U.S.C. 1605(a)(2), but solely with respect to actions instituted against the foreign RIN owner, its agents and employees in any court or other tribunal in the United States for conduct that violates the requirements applicable to the foreign RIN owner under this subpart, including conduct that violates the False Statements Accountability Act of 1996 (18 U.S.C. 1001) and section 113(c)(2) of the Clean Air Act (42 U.S.C. 7413).

(6) The foreign RIN owner, or its agents or employees, will not seek to detain or to impose civil or criminal remedies against EPA inspectors or auditors, whether EPA employees or EPA contractors, for actions performed within the scope of EPA employment related to the provisions of this section.

(7) The commitment required by this paragraph (c) shall be signed by the owner or president of the foreign RIN owner business.

(d) *Sovereign immunity.* By submitting an application to be a foreign RIN owner under this subpart, the foreign entity, and its agents and employees, without exception, become subject to the full operation of the administrative and judicial enforcement powers and provisions of the United States without limitation based on sovereign immunity, with respect to actions instituted against the foreign RIN owner, its agents and employees in any court or other tribunal in the United States for

conduct that violates the requirements applicable to the foreign RIN owner under this subpart, including conduct that violates the False Statements Accountability Act of 1996 (18 U.S.C. 1001) and section 113(c)(2) of the Clean Air Act (42 U.S.C. 7413).

(e) *Bond posting.* Any foreign entity shall meet the requirements of this paragraph (e) as a condition to approval as a foreign RIN owner under this subpart.

(1) The foreign entity shall post a bond of the amount calculated using the following equation:

$$\text{Bond} = G * \$\,0.01$$

Where:

Bond = Amount of the bond in U.S. dollars.

G = The total of the number of gallon-RINs the foreign entity expects to obtain, sell, transfer or hold during the first calendar year that the foreign entity is a RIN owner, plus the number of gallon-RINs the foreign entity expects to obtain, sell, transfer or hold during the next four calendar years. After the first calendar year, the bond amount shall be based on the actual number of gallon-RINs obtained, sold, or transferred so far during the current calendar year plus the number of gallon-RINs obtained, sold, or transferred during the four calendar years immediately preceding the current calendar year. For any year for which there were fewer than four preceding years in which the foreign entity obtained, sold, or transferred RINs, the bond shall be based on the total of the number of gallon-RINs sold or transferred so far during the current calendar year plus the number of gallon-RINs obtained, sold, or transferred during any immediately preceding calendar years in which the foreign entity owned RINs, plus the number of gallon-RINs the foreign entity expects to obtain, sell or transfer during subsequent calendar years, the total number of years not to exceed four calendar years in addition to the current calendar year.

(2) Bonds shall be posted by any of the following methods:

(i) Paying the amount of the bond to the Treasurer of the United States.

(ii) Obtaining a bond in the proper amount from a third party surety agent that is payable to satisfy United States administrative or judicial judgments against the foreign RIN owner, provided EPA agrees in advance as to the third party and the nature of the surety agreement.

(3) All the following shall apply to bonds posted under this paragraph (e); bonds shall:

(i) Be used to satisfy any judicial judgment that results from an administrative or judicial enforcement action for conduct in violation of this subpart, including where such conduct violates the False Statements Accountability Act of 1996 (18 U.S.C. 1001) and section 113(c)(2) of the Clean Air Act (42 U.S.C. 7413).

(ii) Be provided by a corporate surety that is listed in the United States Department of Treasury Circular 570 ''Companies Holding Certificates of Authority as Acceptable Sureties on Federal Bonds''.

(iii) Include a commitment that the bond will remain in effect for at least five years following the end of latest reporting period in which the foreign RIN owner obtains, sells, transfers, or holds RINs.

(4) On any occasion a foreign RIN owner bond is used to satisfy any judgment, the foreign RIN owner shall increase the bond to cover the amount used within 90 days of the date the bond is used.

(f) *English language reports.* Any document submitted to EPA by a foreign RIN owner shall be in English, or shall include an English language translation.

(g) *Prohibitions.*—(1) A foreign RIN owner is prohibited from obtaining, selling, transferring, or holding any RIN that is in excess of the number for which the bond requirements of this section have been satisfied.

(2) Any RIN that is obtained, sold, transferred, or held that is in excess of the number for which the bond requirements of this section have been satisfied is an invalid RIN under § 80.1431.

(3) Any RIN that is obtained from a person located outside the United States that is not an approved foreign RIN owner under this section is an invalid RIN under § 80.1431.

(4) No foreign RIN owner or other person may cause another person to commit an action prohibited in this paragraph (g), or that otherwise violates the requirements of this section.

(h) *Additional attest requirements for foreign RIN owners.* The following additional requirements apply to any foreign RIN owner as part of the attest engagement required for RIN owners under this subpart M.

(1) The attest auditor must be independent of the foreign RIN owner.

(2) The attest auditor must be licensed as a Certified Public Accountant in the United States and a citizen of the United States, or be approved in advance by EPA based on a demonstration of ability to perform the procedures required in §§ 80.125 through 80.127, 80.130, and 80.1464.

(3) The attest auditor must sign a commitment that contains the provisions specified in paragraph (c) of this section with regard to activities and documents relevant to compliance with the requirements of §§ 80.125 through 80.127, 80.130, and 80.1464.

(i) *Withdrawal or suspension of foreign RIN owner status.* EPA may withdraw or suspend its approval of a foreign RIN owner where any of the following occur:

(1) A foreign RIN owner fails to meet any requirement of this section, including, but not limited to, the bond requirements.

(2) A foreign government fails to allow EPA inspections as provided in paragraph (c)(1) of this section.

(3) A foreign RIN owner asserts a claim of, or a right to claim, sovereign immunity in an action to enforce the requirements in this subpart.

(4) A foreign RIN owner fails to pay a civil or criminal penalty that is not satisfied using the foreign RIN owner bond specified in paragraph (e) of this section.

(j) *Additional requirements for applications, reports and certificates.* Any application for approval as a foreign RIN owner, any report, certification, or other submission required under this section shall be:

(1) Submitted in accordance with procedures specified by the Administrator, including use of any forms that may be specified by the Administrator.

(2) Signed by the president or owner of the foreign RIN owner company, or by that person's immediate designee, and shall contain the following declaration:

''I hereby certify: (1) That I have actual authority to sign on behalf of and to bind [INSERT NAME OF FOREIGN RIN OWNER] with regard to all statements contained herein; (2) that I am aware that the information contained herein is being Certified, or submitted to the United States Environmental Protection Agency, under the requirements of 40 CFR part 80, subpart M, and that the information is material for determining compliance under these regulations; and (3) that I have read and understand the information being Certified or submitted, and this information is true, complete and correct to the best of my knowledge and belief after I have taken reasonable and appropriate steps to verify the accuracy thereof. I affirm that I have read and understand the provisions of 40 CFR part 80, subpart M, including 40 CFR 80.1467 apply to [INSERT NAME OF FOREIGN RIN OWNER]. Pursuant to Clean Air Act section 113(c) and 18 U.S.C. 1001, the penalty for furnishing false, incomplete or misleading information in this certification or submission is a fine of up to $10,000 U.S., and/or imprisonment for up to five years.''.

[75 FR 14863, Mar. 26, 2010, as amended at 77 FR 1358, Jan. 9, 2012]

§ 80.1468 Incorporation by reference.

(a) Certain material is incorporated by reference into this part with the approval of the Director of the Federal Register under 5 U.S.C. 552(a) and 1 CFR part 51. To enforce any edition other than that specified in this section, the Environmental Protection Agency (EPA) must publish notice of change in the FEDERAL REGISTER and the material must be available to the public. All approved material is available for inspection at the National Archives and Records Administration (NARA). For information on the availability of this material at NARA, call 202–741–6030 or go to: *http://www/archives.gov/federal_register/code_of_federal_regulations/ibr_locations.html.* This material is also available for inspection at the EPA Docket Center, Docket No. EPA–HQ–OAR–2005–0161, EPA/DC, EPA West, Room 3334, 1301 Constitution Ave., NW., Washington DC. The telephone number for the Air Docket is (202) 566–1742.

Also, this material is available from the source listed in paragraph (b) of this section.

(b) American Society for Testing and Materials, 100 Barr Harbor Drive, P.O. Box C–700, West Conshohocken, Pennsylvania 19428 (1–800–262–1373, *www.astm.org*).

(1) ASTM D 1250–08 (''ASTM D 1250''), Standard Guide for Use of the Petroleum Measurement Tables, Approved 2008; IBR approved for § 80.1426(f)(8)(ii)(B).

(2) ASTM D 4442–07 (''ASTM D 4442''), Standard Test Methods for Direct Moisture Content Measurement of Wood and Wood-Base Materials, Approved 2007; IBR approved for § 80.1426(f)(7)(v)(B).

(3) ASTM D 4444–08 (''ASTM D 4444''), Standard Test Method for Laboratory Standardization and Calibration of Hand-Held Moisture Meters, Approved 2008; IBR approved for § 80.1426(f)(7)(v)(B).

(4) ASTM D 6751–09 (''ASTM D 6751''), Standard Specification for Biodiesel Fuel Blend Stock (B100) for Middle Distillate Fuels, Approved 2009; IBR approved for § 80.1401.

(5) ASTM D 6866–08 (''ASTM D 6866''), Standard Test Methods for Determining the Biobased Content of Solid, Liquid, and Gaseous Samples Using Radiocarbon Analysis, Approved 2008; IBR approved for §§ 80.1426(f)(9)(ii) and 80.1430(e)(2).

(6) ASTM E 711–87 (''ASTM E 711''), Standard Test Method for Gross Calorific Value of Refuse-Derived Fuel by the Bomb Calorimeter, Reapproved 2004; IBR approved for § 80.1426(f)(7)(v)(A).

(7) ASTM E 870–82 (''ASTM E 870''), Standard Test Methods for Analysis of Wood Fuels, Reapproved 2006); IBR approved for § 80.1426(f)(7)(v)(A).

Subpart N—Additional Requirements for Gasoline-Ethanol Blends

SOURCE: 76 FR 44443, July 25, 2011, unless otherwise noted.

§ 80.1500 Definitions.

The definitions in § 80.2 apply to this subpart. For purposes of this subpart only:

Blendstock for oxygenate blending means gasoline blendstock which could become gasoline solely upon the addition of an oxygenate.

Conventional blendstock for oxygenate blending means gasoline blendstock which could become conventional gasoline solely upon the addition of an oxygenate.

Carrier has the same meaning as defined in § 80.2(t).

Conventional gasoline has the same meaning as defined in § 80.2(ff).

E0 means a gasoline that contains no ethanol.

E10 means a gasoline-ethanol blend that contains at least 9.0 and no more than 10.0 volume percent ethanol.

E15 means a gasoline-ethanol blend that contains greater than 10.0 volume percent ethanol and not more than 15.0 volume percent ethanol.

EX means a gasoline-ethanol blend that contains less than 9 volume percent ethanol where X equals the maximum volume percent ethanol in the gasoline-ethanol blend.

EXX means a gasoline-ethanol blend above E15 where XX equals the maximum volume percent ethanol in the gasoline-ethanol blend.

Ethanol blender has the same meaning as defined in § 80.2(v).

Ethanol importer means a person who brings ethanol into the United States (including from the Commonwealth of Puerto Rico, the Virgin Islands, Guam, American Samoa, and the Northern Mariana Islands) for use in motor vehicles and nonroad engines.

Ethanol producer means any person who owns, leases, operates, controls, or supervises a facility that produces ethanol for use in motor vehicles or nonroad engines.

Flex-fuel vehicle has the same meaning as flexible-fuel vehicle as defined in § 86.1803–01.

Fuel dispenser means the apparatus used to dispense fuel into motor vehicles or nonroad vehicles, engines or equipment, or into a portable fuel container as defined at § 59.680.

Gasoline has the same meaning as defined in § 80.2(c).

Gasoline importer means an importer as defined in § 80.2(r) that imports gasoline or gasoline blending stocks that

could become gasoline solely upon the addition of oxygenates.

Gasoline refiner means a refiner as defined as in § 80.2(i) that produces gasoline or gasoline blending stocks that could become gasoline solely upon the addition of oxygenates.

Oxygenate blender has the same meaning as defined in § 80.2(mm).

Oxygenate blending facility has the same meaning as defined in § 80.2(ll).

Regulatory control periods has the same meaning as defined in § 80.27(a)(2)(ii) or in any State Implementation Plan (SIP) approved or promulgated under §§ 110 or 172 of the Clean Air Act.

Retail outlet has the same meaning as defined § 80.2(j).

Retailer has the same meaning as defined in § 80.2(k).

Survey series means the four quarterly surveys that comprise a survey program.

Sampling strata means the three types of areas sampled during a survey which include the following:

(1) Densely populated areas;

(2) Transportation corridors; and

(3) Rural areas.

Wholesale purchaser-consumer has the same meaning as defined in § 80.2(o).

§ 80.1501 What are the labeling requirements that apply to retailers and wholesale purchaser-consumers of gasoline-ethanol blends that contain greater than 10.0 volume percent ethanol and not more than 15.0 volume percent ethanol?

(a) Any retailer or wholesale purchaser-consumer who sells, dispenses, or offers for sale or dispensing, gasoline-ethanol blends that contain greater than 10.0 volume percent ethanol and not more than 15.0 volume percent ethanol shall affix the following conspicuous and legible label to the fuel dispenser:

ATTENTION
E15
UP TO 15% ETHANOL
USE ONLY IN
• 2001 AND NEWER PASSENGER VEHICLES
• FLEX-FUEL VEHICLES

Don't use in other vehicles, boats, or gasoline-powered equipment. It may cause damage and is prohibited by Federal law.

(b) Labels under this section shall meet the following requirements for appearance and placement:

(1) *Dimensions*. The label shall measure 3 and ⅝ inches wide by 3 and ⅛ inches high.

(2) *Placement*. The label shall be placed on the upper two-thirds of each fuel dispenser where the consumer will see the label when selecting a fuel to purchase. For dispensers with one nozzle, the label shall be placed above the button or other control used for selecting E15, or in any other manner which clearly indicates which control is used to select E15. For dispensers with multiple nozzles, the label shall be placed in the location that is most likely to be seen by the consumer at the time of selection of E15.

(3) *Text*. The text shall be justified and the fonts and backgrounds shall be as described in paragraphs (b)(3)(i) through (vi) and (b)(4)(i) through (iv) of this section.

(i) The word ''*Attention*'' shall be in 20-point, orange, Helvetica Neue LT 77 Bold Condensed font, and shall be placed in the top 1.25 inches of the label as further described in (b)(4)(iii) of this section.

(ii) The word ''E15'' shall be in 42-point, orange, Helvetica Black font, and shall be placed in the top 1.25 inches of the label.

(iii) The ethanol content: ''Up to 15% ethanol'' shall be in 14-point, center-justified, orange, Helvetica Black font in the top 1.25 inches of the label, below the word E15.

(iv) The words ''Use only in'' shall be in 20-point, left-justified, black, Helvetica Bold font in the top 1.25 inches of the label.

(v) The words, and symbols ''• 2001 and newer passenger vehicles • Flex-fuel vehicles'' shall be in 14-point, left-justified, black, Helvetica Bold font.

(vi) The remaining two sentences shall be in 12-point, left-justified, Helvetica Bold font, except that the word ''prohibited'' in the second sentence shall be in 12-point, black, Helvetica Black Italics font.

(4) *Color*. (i) The background of the top 1.25 inches of the label shall be black.

(ii) The background of the bottom 1.75 inches of the label shall be orange.

(iii) The label shall have on the upper left side of the label a diagonal orange stripe that is .3125 inches tall. The stripe shall be placed as far down and across the label as is necessary so as to as to create a black triangle of the upper left corner of the label whose vertical side is contiguous to the vertical edge of the label and is.4375 inches long, and whose horizontal side is contiguous to the horizontal edge of the label and is 1.0 inches long. The word ''Attention'' shall be centered to the upper edge of this stripe.

(5) Alternative labels to those specified in this section may be used if approved by EPA in advance. Such labels must contain all of the informational elements specified in paragraph (a) of this section, and must use colors and other design elements similar in substance and appearance to the label required by this section. Such labels may differ in size and shape from the label required by this section only to a small degree, except to the extent a larger label is necessary to accommodate additional information or translation of label information.

(i) If you use U.S. Mail, send a request for approval of an alternative label to: U.S. EPA, Attn: E15 Alternative Label Request, 6406J, 1200 Pennsylvania Avenue, NW., Washington, DC 20460.

(ii) If you use an overnight or courier service, send a request for approval of an alternative label to: U.S. EPA, Attn: E15 Alternative Label Request, 6406J, 1310 L Street, NW., 6th Floor, Washington, DC 20005. (202) 343–9038.

§ 80.1502 What are the survey requirements related to gasoline-ethanol blends?

Any gasoline refiner, gasoline importer, ethanol blender, ethanol producer, or ethanol importer who manufactures, introduces into commerce, sells or offers for sale E15, gasoline, blendstock for oxygenate blending, ethanol, or gasoline-ethanol blend that is intended for use in or as E15 shall comply with the survey program requirements in either paragraph (a) or paragraph (b) of this section. These same parties are also subject to paragraphs (c), (d) and (e) of this section regardless of whether they choose the survey program requirements in paragraph (a) or paragraph (b) of this section. In the case of ethanol producers and ethanol importers, the ethanol that is produced or imported shall be deemed as intended for use in E15 unless an ethanol producer or an ethanol importer demonstrates that it was not intended for such use.

(a) *Survey option 1.* In order to satisfy the survey program requirements, any gasoline refiner, gasoline importer, ethanol blender, ethanol producer, or ethanol importer who manufactures, introduces into commerce, sells or offers for sale E15, gasoline, blendstock for oxygenate blending, ethanol, or gasoline-ethanol blend intended for use in or as E15 shall properly conduct a program of compliance surveys in accordance with a survey program plan which has been approved by EPA in all areas which may be reasonably expected to be supplied with their gasoline, blendstock for oxygenate blending, ethanol, or gasoline-ethanol blend if these may be used to manufacture E15 or as E15 at any time during the year. Such approval shall be based upon the survey program plan meeting the following criteria:

(1) The survey program shall consist of at least quarterly surveys which shall occur during the following time periods in every year during which the gasoline refiner, gasoline importer, ethanol blender, ethanol producer, or ethanol importer introduces E15 into commerce:

(i) One survey during the period January 1 through March 31;

(ii) One survey during the period April 1 through June 30;

(iii) One survey during the period July 1 through September 30; and

(iv) One survey during the period October 1 through December 31.

(2) The survey program plan shall meet all of the requirements of paragraph (b), except paragraphs (b)(4)(ii) and (b)(4)(v) of this section. The survey program plan shall specify the sampling strata, clusters and area, and number of samples to be included. Notwithstanding paragraph (b)(2) of this section, in order to comply with this paragraph the survey plan need not be conducted by a consortium.

(b) *Survey option 2.* (1) To comply with the requirements under this paragraph (b), any gasoline refiner, gasoline importer, ethanol blender, ethanol producer, or ethanol importer who manufactures, introduces into commerce, sells or offers for sale E15, gasoline, blendstock for oxygenate blending, ethanol, or gasoline-ethanol blend intended for use in or as E15 must participate in a consortium which arranges to have an independent survey association conduct a statistically valid program of compliance surveys pursuant to a survey program plan which has been approved by EPA, in accordance with the requirements of paragraphs (b)(2) through (b)(4) and (b)(6) of this section.

(2) The consortium survey program under this paragraph (b) must be:

(i) Planned and conducted by a survey association that is independent of the ethanol blenders, ethanol producers, ethanol importers, gasoline refiners, and/or gasoline importers that arrange to have the survey conducted. In order to be considered independent:

(A) Representatives of the survey association shall not be an employee of any ethanol blender, ethanol producer, ethanol importer, gasoline refiner, or gasoline importer;

(B) The survey association shall be free from any obligation to or interest in any ethanol blender, ethanol producer, ethanol importer, gasoline refiner, or gasoline importer; and

(C) The ethanol blenders, ethanol producers, ethanol importers, gasoline refiners, and/or gasoline importers that arrange to have the survey conducted shall be free from any obligation to or interest in the survey association.

(ii) Conducted at retail outlets that sell gasoline; and

(iii) Represent all gasoline dispensed nationwide.

(3) *Independent Survey Association Requirements.* The consortium described in paragraph (b)(1) of this section shall require the independent survey association conducting the surveys to:

(i) Submit to EPA for approval each calendar year a proposed survey program plan in accordance with the requirements of paragraph (b)(4) of this section.

(ii) Obtain samples of gasoline offered for sale at gasoline retail outlets in accordance with the survey program plan approved under this paragraph (b), or immediately notify EPA of any refusal of retail outlets to allow samples to be taken.

(iii) Test, or arrange to be tested, the samples required under paragraph (b)(3)(ii) of this section for Reid vapor pressure (RVP), and oxygenate content as follows:

(A) Samples collected at retail outlets shall be shipped the same day the samples are collected via ground service to the laboratory and analyzed for oxygenate content. Samples collected at a dispenser labeled E15 in any manner, or at a tank serving such a dispenser, shall also be analyzed for RVP. Such analysis shall be completed within 10 days after receipt of the sample in the laboratory. Nothing in this section shall be interpreted to require RVP testing of a sample from any dispenser or tank serving it unless the dispenser is labeled E15 in any manner.

(B) Any laboratory to be used by the independent survey association for oxygenate or RVP testing shall be approved by EPA and its test method for determining oxygenate content shall be a method permitted under § 80.46(g), and its test method for determining RVP shall be the method permitted under § 80.46(b).

(iv) In the case of any test that yields a result that does not match the label affixed to the product (e.g., a sample greater than 15.0 volume percent ethanol dispensed from a fuel dispenser labeled as ''E15'' or a sample containing greater than 10.0 volume percent ethanol and not more than 15.0 volume percent ethanol dispensed from a fuel dispenser not labeled as ''E15''), or the RVP standard of § 80.27(a)(2), the independent survey association shall, within 24 hours after the laboratory receives the sample, send notification of the test result as follows:

(A) In the case of a sample collected at a retail outlet at which the brand name of a gasoline refiner or gasoline importer is displayed, to the gasoline refiner or gasoline importer, and EPA. This initial notification to a gasoline refiner or gasoline importer shall include specific information concerning

the name and address of the retail outlet, contact information, the brand, and the ethanol content, and the RVP if required, of the sample.

(B) In the case of a sample collected at other retail outlets, to the retailer and EPA, and such notice shall contain the same information as in paragraph (b)(3)(iv)(A) of this section.

(C) The independent survey association shall provide notice to the identified contact person or persons for each party in writing (which includes e-mail or facsimile) and, if requested by the identified contact person, by telephone.

(v) Confirm that each fuel dispenser sampled is labeled as required in § 80.1501 by confirming that:

(A) The label meets the appearance and content requirements of § 80.1501.

(B) The label is located on the fuel dispenser according to the requirements in § 80.1501.

(vi) In the case of a fuel dispenser that is improperly labeled, or whose fuel does not meet the RVP standards of § 80.27(a)(2) the survey association shall provide notice as provided in paragraphs (b)(2)(iv)(A) through (C) of this section.

(vii) Provide to EPA quarterly and annual summary survey reports which include the information specified in paragraph (b)(5) of this section.

(viii) Maintain all records relating to the surveys conducted under this paragraph (b) for a period of at least five (5) years.

(ix) Permit any representative of EPA to monitor at any time the conducting of the surveys, including sample collection, transportation, storage, and analysis.

(4) *Survey Plan Design Requirements.* The proposed survey program plan required under paragraph (b)(3)(i) of this section shall, at a minimum, include the following:

(i) *Number of Surveys.* The survey program plan shall include four quarterly surveys each calendar year. The four quarterly surveys collectively are called the survey series as defined in § 80.1500.

(ii) *Sampling Areas.* The survey program plan shall include sampling in all sampling strata, as defined in § 80.1500, during each survey. These sampling strata shall be further divided into discrete sampling areas or clusters. Each survey shall include sampling in at least 40 sampling areas in each stratum which are randomly selected.

(iii) *No advance notice of surveys.* The survey plan shall include procedures to keep the identification of the sampling areas that are included in any survey plan confidential from any regulated party prior to the beginning of a survey in an area. However, this information shall not be kept confidential from EPA.

(iv) *Retail outlet selection.* (A) The retail outlets to be sampled in a sampling area shall be selected from among all retail outlets in the sampling area that sell gasoline, with the probability of selection proportionate to the volume of gasoline sold at the retail outlets; the sample should also include retail outlets with different brand names as well as those retail outlets that are unbranded.

(B) In the case of any retail outlet from which a sample of gasoline was collected during a survey and determined to have an ethanol content that does not match the fuel dispenser label (e.g. a sample greater than 15.0 volume percent ethanol dispensed from a fuel dispenser labeled as ''E15'' or a sample with greater than 10.0 volume percent ethanol and not more than 15.0 volume percent ethanol dispensed from a fuel dispenser not labeled as ''E15'') or determined to have a dispenser containing fuel whose RVP does not comply with § 80.27(a)(2), that retail outlet shall be included in the subsequent survey.

(C) One sample of each product dispensed as gasoline shall be collected at each retail outlet, and separate samples shall be taken that represent the gasoline contained in each gasoline storage tank unless collection of separate samples is not practicable.

(v) *Number of samples.* (A) The minimum number of samples to be included in the survey plan for each calendar year shall be calculated as follows:

$$n = \left\{\left[\left(Z_\alpha + Z_\beta\right)\right]^2 \Big/ \left(4 * [arc\sin(\sqrt{\phi_1}) - arc\sin(\sqrt{\phi_0})]^2\right)\right\} * St_n * F_a * F_b * Su_n$$

Where:

n = minimum number of samples in a year-long survey series. However, in no case shall n be smaller than 7,500.

Z_α = upper percentile point from the normal distribution to achieve a one-tailed 95% confidence level (5% α-level). Thus, Z_α equals 1.645.

Z_β = upper percentile point to achieve 95% power. Thus, Z_β equals 1.645.

$_1$ = the maximum proportion of non-compliant stations for a region to be deemed compliant. In this test, the parameter needs to be 5% or greater, *i.e.*, 5% or more of the stations, within a stratum such that the region is considered non-compliant. For this survey, $_1$ will be 5%.

$_o$= the underlying proportion of non-compliant stations in a sample. For the first survey plan, $_o$ = will be 2.3%. For subsequent survey plans, $_o$ = will be the average of the proportion of stations found to be non-compliant over the previous four surveys.

St_n = number of sampling strata. For purposes of this survey program, St_n equals 3.

F_a = adjustment factor for the number of extra samples required to compensate for collected samples that cannot be included in the survey, based on the number of additional samples required during the previous four surveys. However, in no case shall the value of F_a be smaller than 1.1.

F_b = adjustment factor for the number of samples required to resample each retail outlet with test results exceeding the labeled amount (e.g., a sample greater than 15.0 volume percent ethanol dispensed from a fuel dispenser labeled as ''E15'', a sample with greater than 10.0 volume percent ethanol and not more than 15.0 volume percent ethanol dispensed from a fuel dispenser not labeled as ''E15''), or a sample dispensed from a fuel dispenser labeled as ''E15'' with greater than the applicable seasonal and geographic RVP pursuant to § 80.27, based on the rate of resampling required during the previous four surveys. However, in no case shall the value of F_b be smaller than 1.1.

Su_n = number of surveys per year. For purposes of this survey program, Su_n equals 4.

(B) The number of samples determined pursuant to paragraph (b)(4)(v)(A) of this section, after being incremented as necessary to allocate whole numbers of samples to each cluster, shall be distributed approximately equally for the quarterly surveys conducted during the calendar year.

(5) *Summary survey reports.* The quarterly and annual summary survey reports required under paragraph (b)(3)(vii) of this section shall include the following information:

(i) An identification of the parties that are participating in the survey.

(ii) The identification of each sampling area included in a survey and the dates that the samples were collected in that area.

(iii) For each retail outlet sampled:

(A) The identification of the retail outlet;

(B) The gasoline refiner or gasoline importer brand name displayed, if any;

(C) The fuel dispenser labeling (e.g., ''E15'');

(D) The sample test result for oxygenate content, and RVP result, if any;

(E) The test method used to determine oxygenate content under § 80.46(g); and

(F) The test method used to determine RVP under § 80.46(b).

(iv) Ethanol level summary statistics by brand and unbranded for each sampling area, strata, and survey series. These summary statistics shall:

(A) Include the number of samples, the average, median and range of ethanol content, expressed in volume percent.

(B) [Reserved]

(v) The quarterly reports required under this paragraph (b)(5) are due 60 days following the end of the quarter. The annual reports required under this paragraph (b)(5) are due 60 days following the end of the calendar year.

(vi) The reports required under this paragraph (b)(5) shall be submitted to EPA in an electronic spreadsheet.

(c) *Procedures for obtaining approval of survey plan and providing required notices.* The first year in which a survey program is conducted may consist of only a portion of a calendar year ending on December 31 (i.e., in the initial year, a survey program may begin on a date after January 1, but would still

end on December 31). Subsequent survey programs shall be conducted on a calendar year basis. The procedure for obtaining EPA approval of a survey program plan under paragraph (b) or paragraph (c) of this section is as follows:

(1) For the first year in which a survey will be conducted, a survey program plan that complies with the requirements of paragraph (a) or paragraph (b) of this section must be submitted to EPA no later than 60 days prior to the date on which the survey program is to begin.

(2) For subsequent years in which a survey will be conducted, a survey program plan that complies with the requirements of paragraph (a) or paragraph (b) of this section must be submitted to EPA no later than November 1 of the year preceding the calendar year in which the survey will be conducted.

(3) The survey program plan must be signed by a responsible officer of the consortium which arranges to have an independent surveyor conduct the survey program.

(4) The survey program plan must be sent to the following address: Director, Compliance and Innovative Strategies Division, U.S. Environmental Protection Agency, 1200 Pennsylvania Ave., NW., Mail Code 6506J, Washington, DC 20460.

(5) EPA will send a letter to the party submitting the survey program plan that indicates whether EPA approves or disapproves the survey plan.

(6) The approving official for a survey plan under this section is the Director of the Compliance and Innovative Strategies Division, Office of Transportation and Air Quality.

(7) Any notifications or reports required to be submitted to EPA under this section must be directed to the official designated in paragraph (b)(6)(iv) of this section.

(d) *Independent surveyor contract.* (1) For the first year in which a survey program will be conducted, no later than 30 days preceding the start of the survey, the contract with the independent surveyor shall be in effect, and an amount of money necessary to carry out the entire survey plan shall be paid to the independent surveyor or placed into an escrow account with instructions to the escrow agent to pay the money to the independent surveyor during the course of the conduct of the survey plan.

(2) For subsequent years in which a survey program will be conducted, no later than December 1 of the year preceding the year in which the survey will be conducted, the contract with the independent surveyor shall be in effect, and an amount of money necessary to carry out the entire survey plan shall be paid to the independent surveyor or placed into an escrow account with instructions to the escrow agent to pay the money to the independent surveyor during the course of the conduct of the survey plan.

(3) For the first year in which a survey program will be conducted, no later than 15 days preceding the start of the survey EPA must receive a copy of the contract with the independent surveyor and proof that the money necessary to carry out the survey plan has either been paid to the independent surveyor or placed into an escrow account; if the money has been placed into an escrow account, a copy of the escrow agreement must to be sent to the official designated in paragraph (b)(6)(iv) of this section.

(4) For subsequent years in which a survey program will be conducted, no later than December 15 of the year preceding the year in which the survey will be conducted, EPA must receive a copy of the contract with the independent surveyor and proof that the money necessary to carry out the survey plan has either been paid to the independent surveyor or placed into an escrow account; if placed into an escrow account, a copy of the escrow agreement must be sent to the official designated in paragraph (b)(6)(iv) of this section.

(e) *Consequences of failure to fulfill requirements.* A failure to fulfill or cause to be fulfilled any of the requirements of this section is a prohibited act under Clean Air Act section 211(c) and § 80.1504.

(1) EPA may revoke its approval of a survey plan under this section for cause, including, but not limited to, an EPA determination that the approved

survey plan has proved to be inadequate in practice.

(2) EPA may void *ab initio* its approval of a survey plan if EPA's approval was based on false information, misleading information, or incomplete information, or if there was a failure to fulfill, or cause to be fulfilled, any of the requirements of the survey plan.

§ 80.1503 What are the product transfer document requirements for gasoline-ethanol blends, gasolines, and conventional blendstocks for oxygenate blending subject to this subpart?

(a) *Product transfer documentation for conventional blendstock for oxygenate blending, or gasoline transferred upstream of an ethanol blending facility.* (1) In addition to any other product transfer document requirements under 40 CFR part 80, on each occasion after October 31, 2011, when any person transfers custody or title to any conventional blendstock for oxygenate blending which could become conventional gasoline solely upon the addition of ethanol, or gasoline upstream of an oxygenate blending facility, as defined in § 80.2(ll), the transferor shall provide to the transferee product transfer documents which include the following information:

(i) The name and address of the transferor;

(ii) The name and address of the transferee;

(iii) The volume of conventional blendstock for oxygenate blending or gasoline being transferred;

(iv) The location of the conventional blendstock for oxygenate blending or gasoline at the time of the transfer;

(v) The date of the transfer;

(vi) For gasoline during the regulatory control periods defined in § 80.27(a)(2)(ii) or any SIP approved or promulgated under §§ 110 or 172 of the Clean Air Act:

(A) The maximum RVP, as determined by a method permitted under § 80.46(c), stated in the following format: ''The RVP of this gasoline does not exceed [fill in appropriate value]''; and

(B) For gasoline designed for the special provisions for gasoline-ethanol blends in § 80.27(d)(2), information about the ethanol content and RVP in paragraphs (a)(1) through (a)(3) of this section, with insertions as indicated:

(1) ''Suitable for the special RVP provisions for ethanol blends that contain between 9 and 10 vol % ethanol.''

(2) ''The RVP of this blendstock/gasoline for oxygenate blending does not exceed [Fill in appropriate value] psi.

(3) The use of this gasoline to manufacture a gasoline-ethanol blend containing anything other than between 9 and 10 volume percent ethanol may cause a summertime RVP violation.

(C) For gasoline not described in paragraph (a)(vi)(B) of this section, information regarding the suitable ethanol content, stated in the following format: ''Suitable for blending with ethanol at a concentration of no more than 15 vol % ethanol.''

(2) The requirements in paragraph (a)(1) do not apply to reformulated gasoline blendstock for oxygenate blending, as defined in § 80.2(kk), which are subject to the product transfer document requirements of § 80.69 and § 80.77.

(b) *Product transfer documentation for gasoline transferred downstream of an oxygenate blending facility.* (1) In addition to any other product transfer document requirements under 40 CFR part 80, on each occasion after October 31, 2011, when any person transfers custody or title to any gasoline-ethanol blend downstream of an oxygenate blending facility, as defined in § 80.2(ll), except for transfers to the ultimate consumer, the transferor shall provide to the transferee product transfer documents which include the following information:

(i) The name and address of the transferor;

(ii) The name and address of the transferee;

(iii) The volume of gasoline being transferred;

(iv) The location of the gasoline at the time of the transfer;

(v) The date of the transfer; and

(vi) One of the statements detailed in paragraph (b)(1)(vi)(A) though (E) which accurately describes the gasoline-ethanol blend. The information regarding the ethanol content of the fuel is required year-round. The information regarding the RVP of the fuel is only required for gasoline during the regulatory control periods.

(A) For gasoline containing no ethanol (E0), the following statement; ''E0: Contains no ethanol. The RVP does not exceed [fill in appropriate value] psi.''

(B) For gasoline containing less than 9.0 volume percent ethanol, the following statement: ''EX—Contains up to X% ethanol. The RVP does not exceed [fill in appropriate value] psi.'' The term X refers to the maximum volume percent ethanol present in the gasoline.

(C) For gasoline containing between 9.0 and 10.0 volume percent ethanol (E10), the following statement: ''E10: Contains between 9 and 10 vol % ethanol. The RVP does not exceed [fill in appropriate value] psi. The 1.0 psi RVP waiver applies to this gasoline. Do not mix with gasoline containing anything other than between 9 and 10 vol % ethanol.''

(D) For gasoline containing greater than 10.0 volume percent and not more than 15.0 volume percent ethanol (E15), the following statement: ''E15: Contains up to 15 vol % ethanol. The RVP does not exceed [fill in appropriate value] psi;'' or

(E) For all other gasoline that contains ethanol, the following statement: ''EXX—Contains no more than XX% ethanol,'' where XX equals the volume % ethanol.

(2) Except for transfers to truck carriers, retailers, or wholesale purchaser-consumers, product codes may be used to convey the information required under paragraph (b)(1) of this section if such codes are clearly understood by each transferee.

(c) The records required by this section must be kept by the transferor and transferee for five (5) years from the date they were created or received by each party in the distribution system.

(d) On request by EPA, the records required by this section must be made available to the Administrator or the Administrator's authorized representative. For records that are electronically generated or maintained, the equipment or software necessary to read the records shall be made available, or, if requested by EPA, electronic records shall be converted to paper documents.

§ 80.1504 What acts are prohibited under this subpart?

No person shall—

(a)(1) Sell, introduce, cause or permit the sale or introduction of gasoline containing greater than 10.0 volume percent ethanol (i.e., greater than E10) into any model year 2000 or older light-duty gasoline motor vehicle, any heavy-duty gasoline motor vehicle or engine, any highway or off-highway motorcycle, or any gasoline-powered nonroad engines, vehicles or equipment.

(2) Manufacture or introduce into commerce E15 in any calendar year for use in an area prior to commencement of a survey approved under 80.1502 for that area.

(3) Notwithstanding paragraphs (a)(1) and (a)(2) of this section, no person shall be prohibited from manufacturing, selling, introducing, or causing or allowing the sale or introduction of gasoline containing greater than 10.0 volume percent ethanol into any flex-fuel vehicle.

(b) Sell, offer for sale, dispense, or otherwise make available at a retail or wholesale purchaser-consumer facility E15 that is not correctly labeled in accordance with § 80.1501;

(c) Fail to fully or timely implement, or cause a failure to fully or timely implement, an approved survey required under § 80.1502;

(d) Fail to generate, use, transfer and maintain product transfer documents that accurately reflect the type of product, ethanol content, maximum RVP, and other information required under § 80.1503;

(e) Improperly blend, or cause the improper blending of, ethanol into conventional blendstock for oxygenate blending, gasoline or gasoline already containing ethanol, in a manner inconsistent with the information on the product transfer document under § 80.1503(a)(1)(vi) or § 80.1503(b)(1)(vi);

(f) For gasoline during the regulatory control periods, combine any gasoline or conventional blendstock for oxygenate blending intended for blending with E10 that qualifies for the 1 psi allowance under the special regulatory treatment as provided by § 80.27(d) applicable to 9–10 volume percent gasoline-ethanol blends with any gasoline

or conventional blendstock for oxygenate blending intended for blending with E15, unless the resultant combination is designated, in its entirety, as an E10 blendstock for oxygenate blending.

(g) For gasoline during the regulatory control periods, combine any gasoline-ethanol blend containing E10 that qualifies for the 1 psi allowance under the special regulatory treatment as provided by § 80.27(d) applicable to 9–10 volume percent gasoline-ethanol blends, with any gasoline containing E0 or any gasoline blend containing E15.

(h) Fail to meet any other requirement of this subpart.

(i) Cause another person to commit an act in violation of paragraphs (a) through (h) of this section.

§ 80.1505 Who is liable for violations of this subpart?

(a) *Persons liable.* Any person who violates § 80.1504(a) through (i) is liable for the violation. In addition, when the gasoline contained in any storage tank at any facility owned, leased, operated, controlled or supervised by any gasoline refiner, gasoline importer, oxygenate blender, carrier, distributor, reseller, retailer, or wholesale purchaser-consumer is found in violation of the prohibitions described in § 80.1504(a), and (c) through (i), the following persons shall be deemed in violation:

(1) Each gasoline refiner, gasoline importer, oxygenate blender, carrier, distributor, reseller, retailer, or wholesale purchaser-consumer who owns, leases, operates, controls or supervises the facility where the violation is found.

(2) Each gasoline refiner or gasoline importer whose corporate, trade, or brand name, or whose marketing subsidiary's corporate, trade, or brand name, appears at the facility where the violation is found.

(3) Each gasoline refiner, gasoline importer, oxygenate blender, distributor, and reseller who manufactured, imported, sold, offered for sale, dispensed, supplied, offered for supply, stored, transported, or caused the transportation of any gasoline which is in the storage tank containing gasoline found to be in violation.

(4) Each carrier who dispensed, supplied, stored, or transported any gasoline which is in the storage tank containing gasoline found to be in violation, provided that EPA demonstrates, by reasonably specific showings using direct or circumstantial evidence, that the carrier caused the violation.

(b) For label violations under § 80.1504(b), only the wholesale purchaser-consumer or retailer and the branded gasoline refiner or branded gasoline importer, if any, shall be liable.

(c) Each partner to a joint venture, or each owner of a facility owned by two or more owners, is jointly and severally liable for any violation of this subpart that occurs at the joint venture facility or a facility that is owned by the joint owners, or a facility that is committed by the joint venture operation or any of the joint owners of the facility.

(d) Any parent corporation is liable for any violations of this subpart that are committed by any of its solely-owned subsidiaries.

§ 80.1506 What penalties apply under this subpart?

(a) Any person under § 80.1505 who is liable for a violation under § 80.1504 is subject to an administrative or civil penalty, as specified in sections 205 and 211(d) of the Clean Air Act, for every day of each such violation and the amount of economic benefit or savings resulting from the violation.

(b)(1) Any violation of any requirement that pertains to the ethanol content of gasoline shall constitute a separate day of violation for each and every day such gasoline giving rise to such violations remains any place in the gasoline distribution system, beginning on the day that the gasoline that violates such requirement is produced or imported and distributed and/or offered for sale, and ending on the last day that any such gasoline is offered for sale or is dispensed to any ultimate consumer for use in any motor vehicle, unless the violation is corrected by altering the properties and characteristics of the gasoline giving rise to the violations and any mixture of gasolines that contains any of the gasoline giving rise to the violations such that the

gasoline or mixture of gasolines has the properties and characteristics that would have existed if the gasoline giving rise to the violations had been produced or imported in compliance with all requirements that pertain to the ethanol content of gasoline.

(2) For the purposes of this paragraph (b), the length of time the gasoline in question remained in the gasoline distribution system shall be deemed to be 25 days; unless the respective party or EPA demonstrates by reasonably specific showings, using direct or circumstantial evidence, that the gasoline giving rise to the violations remained any place in the gasoline distribution system for fewer than or more than 25 days.

(c) Any violation of any affirmative requirement or prohibition not included in paragraph (b) of this section shall constitute a separate day of violation for each and every day such affirmative requirement is not properly accomplished, and/or for each and every day the prohibited activity continues. For those violations that may be ongoing each and every day the prohibited activity continues shall constitute a separate day of violation.

§ 80.1507 What are the defenses for acts prohibited under this subpart?

(a) *Defenses for prohibited activities.* (1) In any case in which a gasoline refiner, gasoline importer, oxygenate blender, carrier, distributor, reseller, retailer, or wholesale purchaser-consumer would be in violation under § 80.1504(a), and (c) through (i) it shall be deemed not in violation if it can demonstrate:

(i) That the regulated party or its employee or agent did not commit, cause, or contribute to another person's causing the violation;

(ii) That product transfer documents account for all of the gasoline in the storage tank found in violation and indicate that the gasoline met relevant requirements; and

(iii)(A) That it has conducted a quality assurance program, including a sampling and testing program, as described in paragraph (b) of this section;

(B) A carrier may rely on the sampling and testing program carried out by another party, including the party that owns the gasoline in question, provided that the sampling and testing program is carried out properly.

(2)(i) Where a violation is found at a facility which is operating under the corporate, trade or brand name of a refiner, that refiner must show, in addition to the defense elements required by paragraph (a)(1) of this section, that the violation was caused by:

(A) An act in violation of law (other than the Act or this part), or an act of sabotage or vandalism;

(B) The action of any reseller, distributor, oxygenate blender, carrier, or a retailer or wholesale purchaser-consumer supplied by any of these persons, in violation of a contractual undertaking imposed by the gasoline refiner designed to prevent such action, and despite periodic sampling and testing by the gasoline refiner to ensure compliance with such contractual obligation; or

(C) The action of any carrier or other distributor not subject to a contract with the gasoline refiner but engaged by the gasoline refiner for transportation of gasoline, despite specification or inspection of procedures and equipment by the gasoline refiner which are reasonably calculated to prevent such action.

(ii) In this paragraph (a) of this section, to show that the violation ''was caused'' by any of the specified actions the party must demonstrate by reasonably specific showings using direct or circumstantial evidence, that the violation was caused or must have been caused by another.

(3) For label violations under § 80.1504(b), the branded gasoline refiner or branded gasoline importer shall not be deemed liable if the requirements of paragraph (b)(4) of this section are met.

(b) *Quality assurance program.* In order to demonstrate an acceptable quality assurance program for gasoline at all points in the gasoline distribution network, other than at retail outlets and wholesale purchaser-consumer facilities, a party must present evidence of the following in addition to other regular appropriate quality assurance procedures and practices.

(1) A periodic sampling and testing program to determine if the gasoline contains applicable maximum and/or minimum volume percent of ethanol.

(2) That on each occasion when gasoline is found in noncompliance with one of the requirements referred to in paragraph (b)(1) of this section:

(i) The party immediately ceases selling, offering for sale, dispensing, supplying, offering for supply, storing, transporting, or causing the transportation of the violating product; and

(ii) The party promptly remedies the violation (such as by removing the violating product or adding more complying product until the applicable requirements are achieved).

(3) An oversight program conducted by a carrier under paragraph (b)(1) of this section need not include periodic sampling and testing of gasoline in a tank truck operated by a common carrier, but in lieu of such tank truck sampling and testing the common carrier shall demonstrate evidence of an oversight program for monitoring compliance with the requirements of § 80.1504 relating to the transport or storage of gasoline by tank truck, such as appropriate guidance to drivers on compliance with applicable requirements and the periodic review of records normally received in the ordinary course of business concerning gasoline quality and delivery.

(4) The periodic sampling and testing program specified in paragraph (b)(1) of this section shall be deemed to have been in effect during the relevant time period for any party, including branded gasoline refiners and branded gasoline importers, if:

(i) An EPA approved survey program under § 80.1502 was in effect and was implemented fully and properly;

(ii) Any retailer at which a violation was discovered allowed survey inspectors to take samples and inspect labels; and

(iii) For truck loading terminals and truck distributors that perform oxygenate blending, additional quality assurance procedures and practices were in place, such as regular checks to reconcile volumes of ethanol in inventory and regular checks of equipment for proper ethanol blend rates.

§ 80.1508 What evidence may be used to determine compliance with the requirements of this subpart and liability for violations of this subpart?

(a) Compliance with the requirements of this subpart pertaining to the ethanol content of gasoline shall be determined based on the ethanol level of the gasoline, measured using the methodologies specified in § 80.46(g). Any evidence or information, including the exclusive use of such evidence or information, may be used to establish the ethanol content of gasoline if the evidence or information is relevant to whether the ethanol content of gasoline would have been in compliance with the requirements of this subpart if the appropriate sampling and testing methodology had been correctly performed. Such evidence may be obtained from any source or location and may include, but is not limited to, test results using methods other than those specified in § 80.46(g), business records, and commercial documents.

(b) Determinations of compliance with the requirements of this subpart other than those pertaining to the ethanol content of gasoline, and determinations of liability for any violation of this subpart, may be based on information obtained from any source or location. Such information may include, but is not limited to, business records and commercial documents.

APPENDIX A TO PART 80—TEST FOR THE DETERMINATION OF PHOSPHORUS IN GASOLINE

1. Scope.

1.1 This method was developed for the determination of phosphorus generally present as pentavalent phosphate esters or salts, or both, in gasoline. This method is applicable for the determination of phosphorus in the range from 0.0008 to 0.15 g P/U.S. gal, or 0.2 to 49 mg P/liter.

2. Applicable documents.

2.1 ASTM Standards:

D 1100 Specification for Filter Paper for Use in Chemical Analysis.

3. Summary of method.

3.1 Organic matter in the sample is decomposed by ignition in the presence of zinc oxide. The residue is dissolved in sulfuric acid and reacted with ammonium molybdate

and hydrazine sulfate. The absorbance of the ''Molybdenum Blue'' complex is proportional to the phosphorus concentration in the sample and is read at approximately 820 nm in a 5-cm cell.

4. Apparatus.

4.1 Buret, 10-ml capacity, 0.05-ml subdivisions.

4.2 Constant-Temperature Bath, equipped to hold several 100-ml volumetric flasks submerged to the mark. Bath must have a large enough reservoir or heat capacity to keep the temperature at 180 to 190 °F (82.2 to 87.8 °C) during the entire period of sample heating.

NOTE 1: If the temperature of the hot water bath drops below 180 °F (82.2 °C) the color development may not be complete.

4.3 Cooling Bath, equipped to hold several 100-ml volumetric flasks submerged to the mark in ice water.

4.4 Filter Paper, for quantitative analysis, Class G for fine precipitates as defined in Specification D 1100.

4.5 Ignition Dish—Coors porcelain evaporating dish, glazed inside and outside, with pourout (size no. 00A, diameter 75 mm. capacity 70 ml).

4.6 Spectrophotometer, equipped with a tungsten lamp, a red-sensitive phototube capable of operating at 830 nm and with absorption cells that have a 5-cm light path.

4.7 Thermometer, range 50 to 220 °F (10 to 105 °C).

4.8 Volumetric Flask, 100-ml with groundglass stopper.

4.9 Volumetric Flask, 1000-ml with groundglass stopper.

4.10 Syringe, Luer-Lok, 10-ml equipped with 5-cm. 22-gage needle.

5. Reagents.

5.1 Purity of Reagents—Reagent grade chemicals shall be used in all tests. Unless otherwise indicated, it is intended that all reagents shall conform to the specifications of the Committee on Analytical Reagents of the American Chemical Society, where such specifications are available. Other grades may be used, provided it is first ascertained that the reagent is of sufficiently high purity to permit its use without lessening the accuracy of the determination.

5.2 Purity of Water—Unless otherwise indicated, references to water shall be understood to mean distilled water or water of equal purity.

5.3 Ammonium Molybdate Solution—Using graduated cylinders for measurement add slowly (Note 2), with continuous stirring, 225 ml of concentrated sulfuric acid to 500 ml of water contained in a beaker placed in a bath of cold water. Cool to room temperature and add 20 g of ammonium molybdate tetrahydrate ($(NH_4)_6 Mo_7 O_{24} \cdot 4H_2 O$). Stir until solution is complete and transfer to a 1000-ml flask. Dilute to the mark with water.

NOTE 2: Wear a face shield, rubber gloves, and a rubber apron when adding concentrated sulfuric acid to water.

5.4 Hydrazine Sulfate Solution—Dissolve 1.5 of hydrazine sulfate ($H_2 NNH_2 \cdot H_2 SO_4$) in 1 litre of water, measured with a graduated cylinder.

NOTE 3: This solution is not stable. Keep it tightly stoppered and in the dark. Prepare a fresh solution after 3 weeks.

5.5 Molybdate-Hydrazine Reagent—Pipet 25 ml of ammonium molybdate solution into a 100-ml volumetric flask containing approximately 50 ml of water, add by pipet 10 ml of $N_2 NNH_2 \cdot H_2 SO_4$ solution, and dilute to 100 ml with water.

NOTE 4: This reagent is unstable and should be used within about 4 h. Prepare it immediately before use. Each determination (including the blank) uses 50 ml.

5.6 Phosphorus, Standard Solution (10.0 µg P/ml)—Pipet 10 ml of stock standard phosphorus solution into a 1000-ml volumetric flask and dilute to the mark with water.

5.7 Phosphorus, Stock Standard Solution (1.00 mg P/ml)—Dry approximately 5 g of potasium dihydrogen phosphate ($KH_2 PO_4$ in an oven at 221 to 230 °F (105 to 110 °C) for 3 h. Dissolve 4.393 ±0.002 g of the reagent in 150 ml, measured with a graduated cylinder, of $H_2 SO_4$(1+10) contained in a 1000-ml volumetric flask. Dilute with water to the mark.

5.8 Sulfuric Acid (1+10)—Using graduated cylinders for measurement add slowly (Note 2), with continuous stirring, 100-ml of concentrated sulfuric acid ($H_2 SO_4$, sp gr 1.84) to 1 litre of water contained in a beaker placed in a bath of cold water.

5.9 Zinc Oxide.

NOTE 5: High-bulk density zinc oxide may cause spattering. Density of approximately 0.5 g/cm^3 has been found satisfactory.

6. Calibration.

6.1 Transfer by buret, or a volumetric transfer pipet, 0.0, 0.5, 1.0, 1.5, 2.0, 3.0, 3.5, and 4.0 ml of phosphorus standard solution into 100-ml volumetric flasks.

6.2 Pipet 10 ml of $H_2 SO_4$ (1+10) into each flask. Mix immediately by swirling.

6.3 Prepare the molybdate-hydrazine solution. Prepare sufficient volume of reagent based on the number of samples being analyzed.

6.4 Pipet 50 ml of the molybdate-hydrazine solution to each volumetric flask. Mix immediately by swirling.

6.5 Dilute to 100 ml with water.

6.6 Mix well and place in the constant-temperature bath so that the contents of the flask are submerged below the level of the bath. Maintain bath temperature at 180 to 190 °F (82.2 to 87.8 °C) for 25 min (Note 1).

6.7 Transfer the flask to the cooling bath and cool the contents rapidly to room temperature. Do not allow the samples to cool more than 5 °F (2.8 °C) below room temperature.

NOTE 6: Place a chemically clean thermometer in one of the flasks to check the temperature.

6.8 After cooling the flasks to room temperature, remove them from the cooling water bath and allow them to stand for 10 min. at room temperature.

6.9 Using the 2.0-ml phosphorus standard in a 5-cm cell, determine the wavelength near 820 nm that gives maximum absorbance. The wavelength giving maximum absorbance should not exceed 830 nm.

6.9.1 Using a red-sensitive phototube and 5-cm cells, adjust the spectrophotometer to zero absorbance at the wavelength of maximum absorbance using distilled water in both cells. Use the wavelength of maximum absorbance in the determination of calibration readings and future sample readings.

6.9.2 The use of 1-cm cells for the higher concentrations is permissible.

6.10 Measure the absorbance of each calibration sample including the blank (0.0 ml phosphorus standard) at the wavelength of maximum absorbance with distilled water in the reference cell.

NOTE 7: Great care must be taken to avoid possible contamination. If the absorbance of the blank exceeds 0.04 (for 5-cm cell), check for source of contamination. It is suggested that the results be disregarded and the test be rerun with fresh reagents and clean glassware.

6.11 Correct the absorbance of each standard solution by subtracting the absorbance of the blank (0 ml phosphorus standard).

6.12 Prepare a calibration curve by plotting the corrected absorbance of each standard solution against micrograms of phosphorus. One millilitre of phosphorus standard solution provides 10 μg of phosphorus.

7. Sampling.

7.1 Selection of the size of the sample to be tested depends on the expected concentration of phosphorous in the sample. If a concentration of phosphorus is suspected to be less than 0.0038 g/gal (1.0 mg/litre), it will be necessary to use 10 ml of sample.

NOTE 8: Two grams of zinc oxide cannot absorb this volume of gasoline. Therefore the 10-ml sample is ignited in aliquots of 2 ml in the presence of 2 g of zinc oxide.

7.2 The following table serves as a guide for selecting sample size:

Phosphorus, milligrams per liter	Equivalent, grams per gallon	Sample size, milliliter
2.5 to 40	0.01 to 0.15	1.00
1.3 to 20	0.005 to 0.075	2.00
0.9 to 13	0.0037 to 0.05	3.00
1 or less	0.0038 or less	10.00

8. Procedure.

8.1 Transfer 2 ±0.2 g of zinc oxide into a conical pile in a clean, dry, unetched ignition dish.

NOTE 9: In order to obtain satisfactory accuracy with the small amounts of phosphorus involved, it is necessary to take extensive precautions in handling. The usual precautions of cleanliness, careful manipulation, and avoidance of contamination should be scrupulously observed; also, all glassware should be cleaned before use, with cleaning acid or by some procedure that does not involve use of commercial detergents. These compounds often contain alkali phosphates which are strongly adsorbed by glass surfaces and are not removed by ordinary rinsing. It is desirable to segregate a special stock of glassware for use only in the determination of phosphorus.

8.2 Make a deep depression in the center of the zinc oxide pile with a stirring rod.

8.3 Pipet the gasoline sample (Note 10) (see 7.2 for suggested sample volume) into the depression in the zinc oxide. Record the temperature of the fuel if the phosphorus content is required at 60 °F (15.6 °C) and make correction as directed in 9.2.

NOTE 10: For the 10-ml sample use multiple additions and a syringe. Hold the tip of the needle at approximately ⅔ of the depth of the zinc oxide layer and slowly deliver 2 ml of the sample: fast sample delivery may give low results. Give sufficient time for the gasoline to be absorbed by the zinc oxide. Follow step 8.6. Cool the dish to room temperature. Repeat steps 8.3 and 8.6 until all the sample has been burned. Safety—cool the ignition dish before adding the additional aliquots of gasoline to avoid a flash fire.

8.4 Cover the sample with a small amount of fresh zinc oxide from reagent bottle (use the tip of a small spatula to deliver approximately 0.2 g). Tap the sides of the ignition dish to pack the zinc oxide.

8.5 Prepare the blank, using the same amount of zinc oxide in an ignition dish.

8.6 Ignite the gasoline, using the flame from a bunsen burner. Allow the gasoline to burn to extinction (NOTE 10).

8.7 Place the ignition dishes containing the sample and blank in a hot muffle furnace set at a temperature of 1150 to 1300 °F (621 to 704 °C) for 10 min. Remove and cool the ignition dishes. When cool gently tap the sides of the dish to loosen the zinc oxide. Again place the dishes in the muffle furnace for 5 min. Remove and cool the ignition dishes to room

temperature. The above treatment is usually sufficient to burn the carbon. If the carbon is not completely burned off place the dish into the oven for further 5-min. periods.

NOTE 11: Step 8.7 may also be accomplished by heating the ignition dish with a Meker burner gradually increasing the intensity of heat until the carbon from the sides of the dish has been burned, then cool to room temperature.

8.8 Pipet 25 ml of H_2SO_4 (1+10) to each ignition dish. While pipeting, carefully wash all traces of zinc oxide from the sides of the ignition dish.

8.9 Cover the ignition dish with a borosilicate watch glass and warm the ignition dish on a hot plate until the zinc oxide is completely dissolved.

8.10 Transfer the solution through filter paper to a 100-ml volumetric flask. Rinse the watch glass and the dish several times with distilled water (do not exceed 25 ml) and transfer the washings through the filter paper to the volumetric flask.

8.11 Prepare the molybdate-hydrazine solution.

8.12 Add 50 ml of the molybdate-hydrazine solution by pipet to each 100-ml volumetric flask. Mix immediately by swirling.

8.13 Dilute to 100 ml with water and mix well. Remove stoppers from flasks after mixing.

8.14 Place the 100-ml flasks in the constant-temperature bath for 25 min. so that the contents of the flasks are below the liquid level of the bath. The temperature of the bath should be 180 to 190 °F (82.2 to 87.8 °C) (NOTE 1).

8.15 Transfer the 100-ml flasks to the cooling bath and cool the contents rapidly to room temperature (NOTE 6).

8.16 Allow the samples to stand at room temperature before measuring the absorbance.

NOTE 12: The color developed is stable for at least 4 h.

8.17 Set the spectrophotometer to the wavelength of maximum absorbance as determined in 6.9. Adjust the spectrophotometer to zero absorbance, using distilled water in both cells.

8.18 Measure the absorbance of the samples at the wavelength of maximum absorbance with distilled water in the reference cell.

8.19 Subtract the absorbance of the blank from the absorbance of each sample (NOTE 7).

8.20 Determine the micrograms of phosphorous in the sample, using the calibration curve from 6.12 and the corrected absorbance.

9. Calculations.

9.1 Calculate the milligrams of phosphorus per litre of sample as follows:

$$P, \text{ mg/litre} = P/V$$

where:

P = micrograms of phosphorus read from calibration curve, and

V = millilitres of gasoline sample.

To convert to grams of phosphorus per U.S. gallon of sample, multiply mg P/litre by 0.0038.

9.2 If the gasoline sample was taken at a temperature other than 60 °F (15.6 °C) make the following temperature correction:

$$\text{mg P/litre at 15.6 °C} = [\text{mg P/litre at t}][1+0.001\,(t-15.6)]$$

where:

t = observed temperature of the gasoline, °C.

9.3 Concentrations below 2.5 mg/litre or 0.01 g/gal should be reported to the nearest 0.01 mg/litre or 0.0001 g/U.S. gal.

9.3.1 For higher concentrations, report results to the nearest 1 mg P/litre or 0.005 g P/U.S. gal.

10. Precision.

10.1 The following criteria should be used for judging the acceptability of results (95 percent confidence):

10.2 Repeatability—Duplicate results by the same operator should be considered suspect if they differ by more than the following amounts:

g P/U.S. gal (mg·P/litre)	Repeatability
0.0008 to 0.005 (0.2 to 1.3) ..	0.0002 g P/U.S. gal (0.05 mg P/litre).
0.005 to 0.15 (1.3 to 40)	7% of the mean.

10.3 Reproducibility—The results submitted by each of two laboratories should not be considered suspect unless they differ by more than the following amounts:

g P/U.S. gal (mg·P/litre)	Reproducibility
0.0008 to 0.005 (0.2 to 1.3) ..	0.0005 g P/U.S. gal (0.13 mg P/litre).
0.005 to 0.15 (1.3 to 40)	13% of the mean.

[39 FR 24891, July 8, 1974; 39 FR 25653, July 12, 1974]

APPENDIX B TO PART 80—TEST METHODS FOR LEAD IN GASOLINE

METHOD 1—STANDARD METHOD TEST FOR LEAD IN GASOLINE BY ATOMIC ABSORPTION SPECTROMETRY

1. Scope.

1.1. This method covers the determination of the total lead content of gasoline. The procedure's calibration range is 0.010 to 0.10 gram of lead/U.S. gal. Samples above this level should be diluted to fall within this range or a higher level calibration standard curve must be prepared. The higher level

curve must be shown to be linear and measurement of lead at these levels must be shown to be accurate by the analysis of control samples at a higher level of alkyl lead content. The method compensates for variations in gasoline composition and is independent of lead alkyl type.

2. Summary of method.

2.1 The gasoline sample is diluted with methyl isobutyl ketone and the alkyl lead compounds are stabilized by reaction with iodine and a quarternary ammonium salt. The lead content of the sample is determined by atomic absorption flame spectrometry at 2833 A, using standards prepared from reagent grade lead chloride. By the use of this treatment, all alkyl lead compounds give identical response.

3. Apparatus.

3.1 Atomic Absorption Spectometer, capable of scale expansion and nebulizer adjustment, and equipped with a slot burner and premix chamber for use with an air-acetylene flame.

3.2 Volumetric Flasks, 50-ml, 100-ml, 250-ml, and one litre sizes.

3.3 Pipets, 2-ml, 5-ml, 10-ml, 20-ml, and 50-ml sizes.

3.4 Micropipet, 100-µl, Eppendorf type or equivalent.

4. Reagents.

4.1 Purity of Reagents—Reagent grade chemicals shall be used in all tests. Unless otherwise indicated, it is intended that all reagents shall conform to the specifications of the Committee on Analytical Reagents of the American Chemical Society, where such specifications are available. Other grades may be used, provided it is first ascertained that the reagent is of sufficiently high purity to permit its use without lessening the accuracy of the determination.

4.2 Purity of Water—Unless otherwise indicated, references to water shall be understood to mean distilled water or water of equal purity.

4.3 Aliquat 336 (tricapryl methyl ammonium chloride).

4.4 Aliquat 336/MIBK Solution (10 percent v/v)—Dissolve and dilute 100 ml (88.0 g) of Aliquat 336 with MIBK to one liter.

4.5 Aliquat 336/MIBK Solution (1 percent v/v)—Dissolve and dilute 10 ml (8.8 g) of Aliquat 336 with MIBK to one liter.

4.6 Iodine Solution—Dissolve and dilute 3.0 g iodine crystals with Toluene to 100 ml.

4.7 Lead Chloride.

4.8 Lead-Sterile Gasoline—Gasoline containing less than 0.005 g Pb/gal.

4.9 Lead, Standard Solution (5.0 g Pb/gal)—Dissolve 0.4433 g of lead chloride ($PbCl_2$) previously dried at 105 °C for 3 h in about 200 ml of 10 percent Aliquat 336/MIBK solution in a 250-ml volumetric flask. Dilute to the mark with the 10 percent Aliquat solution, mix, and store in a brown bottle having a polyethylene-lined cap. This solution contains 1,321 µg Pb/ml, which is equivalent to 5.0 g Pb/gal.

4.10 Lead, Standard Solution (1.0 g Pb/gal)—By means of a pipet, accurately transfer 50.0 ml of the 5.0 g Pb/gal solution to a 250-ml volumetric flask, dilute to volume with 1 percent Aliquat/MIBK solution. Store in a brown bottle having a polyethylene-lined cap.

4.11 Lead, Standard Solutions (0.02, 0.05, and 0.10 g Pb/gal)—Transfer accurately by means of pipets 2.0, 5.0, and 10.0 ml of the 1.0-g Pb/gal solution to 100-ml volumetric flasks; add 5.0 ml of 1 percent Aliquat 336 solution to each flask; dilute to the mark with MIBK. Mix well and store in bottles having polyethylene-lined caps.

4.12 Methyl Isobutyl Ketone (MIBK). (4-methyl-2-pentanone).

5. Calibration.

5.1 Preparation of Working Standards—Prepare three working standards and a blank using the 0.02, 0.05, and 0.10-g Pb/gal standard lead solutions described in 4.11.

5.1.1 To each of four 50-ml volumetric flasks containing 30 ml of MIBK, add 5.0 ml of low lead standard solution and 5.0 ml of lead-free gasoline. In the case of the blank, add only 5.0 ml of lead-free gasoline.

5.1.2 Add immediately 0.1 ml of iodine/toluene solution by means of the 100-µl Eppendorf pipet. Mix well.[1]

5.1.3 Add 5 ml of 1 percent Aliquat 336 solution and mix.

5.1.4 Dilute to volume with MIBK and mix well.

5.2 Preparation of Instrument—Optimize the atomic absorption equipment for lead at 2833 A. Using the reagent blank, adjust the gas mixture and the sample aspiration rate to obtain an oxidizing flame.

5.2.1 Aspirate the 0.1-g Pb/gal working standard and adjust the burner position to give maximum response. Some instruments require the use of scale expansion to produce a reading of 0.150 to 0.170 for this standard.

5.2.2 Aspirate the reagent blank to zero the instrument and check the absorbances of the three working standards for linearity.

6. Procedure.

6.1 To a 50 ml volumetric flask containing 30 ml MIBK, add 5.0 ml of gasoline sample and mix.[2]

---

[1] EPA practice will be to mix well by shaking vigorously for approximately one minute.

[2] The gasoline should be allowed to come to room temperature (25 °C).

6.1.1 Add 0.10 ml (100 µl) of iodine/toluene solution and allow the mixture to react about 1 minute.[3]

6.1.2 Add 5.0 ml of 1 percent Aliquot 336/MIBK solution and mix.

6.1.3 Dilute to volume with MIBK and mix.

6.2 Aspirate the samples and working standards and record the absorbance values with frequent checks of the zero.

6.3 Any sample resulting in a peak greater than 0.05 g Pb/gal will be run in duplicate. Samples registering greater than 0.10 g Pb/gal should be diluted with iso-octane or unleaded fuel to fall within the calibration range or a higher level calibration standard curve must be prepared. The higher level curve must be shown to be linear and measurement of lead at these levels must be shown to be accurate by the analysis of control samples at a higher level of alkyl lead content.

7. Calculations.

7.1 Plot the absorbance values versus concentration represented by the working standards and read the concentrations of the samples from the graph.

8. Precision.

8.1 The following criteria should be used for judging the acceptability of results (95 percent confidence):

8.1.1 Repeatability—Duplicate results by the same operator should be considered suspect if they differ by more than 0.005 g/gal.

8.1.2 Reproductibility—The results submitted by each of two laboratories should not be considered suspect unless the two results differ by more than 0.01 g/gal.

METHOD 2—AUTOMATED METHOD TEST FOR LEAD IN GASOLINE BY ATOMIC ABSORPTION SPECTROMETRY

1. Scope and application.

1.1 This method covers the determination of the total lead content of gasoline. The procedure's calibration range is 0.010 to 0.10 gram of lead/U.S. gal. Samples above this level should be diluted to fall within this range or a higher level calibration standard curve must be prepared. The higher level curve must be shown to be linear and measurement of lead at these levels must be shown to be accurate by the analysis of control samples at a higher level of alkyl lead content. The method compensates for variations in gasoline composition and is independent of lead alkyl type.

1.2 This method may be used as an alternative to the Standard Method set forth above.

1.3 Where trade names or specific products are noted in the method, equivalent apparatus and chemical reagents may be used. Mention of trade names or specific products is for the assistance of the user and does not constitute endorsement by the U.S. Environmental Protection Agency.

2. Summary of method.

2.1 The gasoline sample is diluted with methly isobutyl ketone (MIBK) and the alkyl lead compounds are stabilized by reacting with iodine and a quarternary ammonium salt. An automated system is used to perform the diluting and the chemical reactions and feed the products to the atomic absorption spectrometer with an air-acetylene flame.

2.2 The dilution of the gasoline with MIBK compensates for severe non-atomic absorption, scatter from unburned carbon containing species and matrix effects caused in part by the burning characteristics of gasoline.

2.3 The *in-situ* reaction of alkyl lead in gasoline with iodine eliminates the problem of variations in response due to different alkyl types by leveling the response of all alkyl lead compounds.

2.4 The addition of the quarternary ammonium salt improves response and increases the stability of the alkyl iodide complex.

3. Sample handling and preservation.

3.1 Samples should be collected and stored in containers which will protect them from changes in the lead content of the gasoline such as from loss of volatile fractions of the gasoline by evaporation or leaching of the lead into the container or cap.

3.2 If samples have been refrigerated they should be brought to room temperature prior to analysis.

4. Apparatus.

4.1 AutoAnalyzer system consisting of:

4.1.1 Sampler 20/hr cam, 30/hr cam.

4.1.2 Proportioning pump.

4.1.3 Lead in gas manifold.

4.1.4 Disposable test tubes.

4.1.5 Two 2-liter and one 0.5 liter Erlenmeyer solvent displacement flasks. Alternatively, high pressure liquid chromatography (HPLC) or syringe pumps may be used.

4.2 Atomic Absorption Spectroscopy (AAS) Detector System consisting of:

4.2.1 Atomic absorption spectrometer.

4.2.2 10″ strip chart recorder.

4.2.3 Lead hollow cathode lamp or electrodeless discharge lamp (EDL).

5. Reagents.

5.1 Aliquat 336/MIBK solution (10% v/v): Dissolve and dilute 100 ml (88.0 g) of Aliquat

[3] See footnote 1 of section 5.1.2.

336 (Aldrich Chemical Co., Milwaukee, Wisconsin) with MIBK (Burdick & Jackson Lab., Inc., Muskegon, Michigan) to one liter.

5.2 Aliquat 336/iso-octane solution (1% v/v): Dissolve and dilute 10 ml (8.8 g) of Alquat 336 (reagent 5.1) with iso-octane to one liter.

5.3 Iodine solution (3% w/v): Dissolve and dilute 3.0 g iodine crystals (American Chemical Society) with toluene (Burdick & Jackson Lab., Inc., Muskegon, Michigan) to 100 ml.

5.4 Iodine working solution (0.24% w/v): Dilute 8 ml of reagent 5.3 to 100 ml with toluene.

5.5 Methyl isobutyl ketone (MIBK) (4-methlyl-2-pentanone).

5.6 Certified unleaded gasoline (Phillips Chemical Co., Borger, Texas) or iso-octane (Burdick & Jackson Lab, Inc., Muskegon, Michigan).

6. Calibration standards.

6.1 Stock 5.0 g Pb/gal Standard:

Dissolve 0.4433 gram of lead chloride ($PbCl_2$) previously dried at 105 °C for 3 hours in 200 ml of 10% v/v Aliquat 336/MIBK solution (reagent 5.1) in a 250 ml volumetric flask. Dilute to volume with reagent 5.1 and store in an amber bottle.

6.2 Intermediate 1.0 g Pb/gal Standard:

Pipet 50 ml of the 5.0 g Pb/gal standard into a 250 ml volumetric flask and dilute to volume with a 1% v/v Aliquat 336/iso-octane solution (reagent 5.2). Store in an amber bottle.

6.3 Working 0.02, 0.05, 0.10 g Pb/gal Standards:

Pipet 2.0, 5.0, and 10.0 ml of the 1.0 g Pb/gal solution to 100 ml volumetric flasks. Add 5 ml of a 1% Aliquat 336/iso-octane solution to each flask. Dilute to volume with iso-octane. These solutions contain 0.02, 0.05, and 0.10 g Pb/gal in a 0.05% Aliquat 336/iso-octane solution.

7. AAS Instrumental conditions.

7.1 Lead hollow cathode lamp.

7.2 Wavelength: 283.3 nm.

7.3 Slit: 4 (0.7mm).

7.4 Range: UV.

7.5 Fuel: Acetylene (approx. 20 ml/min at 8 psi).

7.6 Oxidant: Air (approx. 65 ml/min at 31 psi).

7.7 Nebulizer: 5.2 ml/min.

7.8 Chart speed: 10 in/hr.

8. Procedures.

8.1 AAS start-up.

8.1.1 Assure that instrumental conditions have been optimized and aligned according to Section 7 and the instrument has had substantial time for warm-up.

8.2 Auto Analyzer start-up [see figure 1].

8.2.1 Check all pump tubing and replace as necessary. Iodine tubing should be changed daily. All pump tubing should be replaced after one week of use. Place the platen on the pump.

8.2.2 Withdraw any water from the sample wash cup and fill with certified unleaded gasoline (reagent 5.6).

8.2.3 Fill the 2-liter MIBK dilution displacement Erlenmeyer flask (reagent 5.5) and the 0.5 liter Aliquat 336/MIBK 1% v/v (reagent 5.2) displacement flask and place the rubber stopper glass tubing assemblies in their respective flasks.

8.2.4 Fill a 2-liter Erlenmeyer flask with distilled water. The water will be used to displace the solvents. Therefore, place the appropriate lines in this flask. This procedure is not relevant if syringe pumps are used.

8.2.5 Fill the final debubbler reverse displacement 2-liter Erlenmeyer flask with distilled water and place the rubber stopper glass tubing assembly in the flask.

8.2.6 Place the appropriate lines for the iodine reagent (reagent 5.4) and the wash solution (reagent 5.6) in their respective bottles.

8.2.7 Start the pump and connect the aspiration line from the manifold to the AAS.

8.2.8 Some initial checks to assure that the reagents are being added are:

a. A good uniform bubble pattern.

b. Yellow color evident due to iodine in the system.

c. No surging in any tubing.

8.3 Calibration.

8.3.1 Turn the chart drive on and obtain a steady baseline.

8.3.2 Load standards and samples into sample tray.

8.3.3 Start the sampler and run the standards (Note: first check the sample probe positioning with an empty test tube).

8.3.4 Check the linearity of calibration standards response and slope by running a least squares fit. Check these results against previously obtained results. They should agree within 10%.

8.3.5 If the above is in control then start the sample analysis.

8.4 Sample Analysis.

8.4.1 To minimize gasoline vapor in the laboratory, load the sample tray about 5–10 test tubes ahead of the sampler.

8.4.2 Record the sample number on the strip chart corresponding to the appropriate peak.

8.4.3 Every ten samples run the high calibration standard and a previously analyzed sample (duplicate). Also let the sampler skip to check the baseline.

8.4.4 After an acceptable peak (within the calibration range) is obtained, pour the excess sample from the test tube into the waste gasoline can.

8.4.5 Any sample resulting in a peak greater than 0.05 g Pb/gal will be run in duplicate. Samples registering greater than 0.10 g Pb/gal should be diluted with iso-octane or

unleaded fuel to fall within the calibration range or a higher level calibration standard curve must be prepared. The higher level curve must be shown to be linear and measurement of lead at these levels must be shown to be accurate by the analysis of control samples at a higher level of alkyl lead content.

8.5 Shut Down.

8.5.1 Replace the solvent displacement flask with flasks filled with distilled water. Also place all other lines in a beaker of distilled water. Rinse the system with distilled water for 15 minutes.

8.5.2 Withdraw the gasoline from the wash cup and fill with water.

8.5.3 Dispose of all solvent waste in waste glass bottles.

8.5.4 Turn the AAS off after extinguishing the flame. Also turn the recorder and pump off. Remove the platen and release the pump tubing.

8.5.5 Shut the acetylene off at the tank and bleed the line.

9. Quality control.

9.1 Precision.

9.1.1 All duplicate results should be considered suspect if they differ by more than 0.005 g Pb/gal.

9.2 Accuracy.

9.2.1 All quality control standard checks should agree within 10% of the nominal value of the standard.

9.2.2 All spikes should agree within 10% of the known addition.

10. Past quality control data.

10.1 Precision.

10.1.1 Duplicate analysis for 156 samples in a single laboratory has resulted in an average difference of 0.00011 g Pb/gal with a standard deviation of 0.0023.

10.1.2 Replicate analysis in a single laboratory (greater than 5 determinations) of samples at concentrations of 0.010, 0.048, and 0.085 g Pb/gal resulted in relative standard deviations of 4.2%, 3.5%, and 3.3% respectively.

10.2 Accuracy.

10.2.1 The analysis of National Bureau of Standards (NBS) lead in reference fuel of known concentrations in a single laboratory has resulted in found values deviating from the true value for 11 determinations of 0.0322 g Pb/gal by an average of 0.56% with a standard deviation of 6.8%, for 15 determinations of 0.0519 g Pb/gal by an average of -1.1% with a standard deviation of 5.8%, and for 7 determinations of 0.0725 g Pb/gal by an average of 3.5% with a standard deviation of 4.8%.

10.2.2 Twenty-three analyses of blind reference samples in a single laboratory (U.S. EPA, RTP, N.C.) have resulted in found values differing from the true value by an average of -0.0009 g Pb/gal with a standard deviation of 0.004.

10.2.3 In a single laboratory, the average percent recovery of 108 spikes made to samples was 101% with a standard deviation of 5.6%.

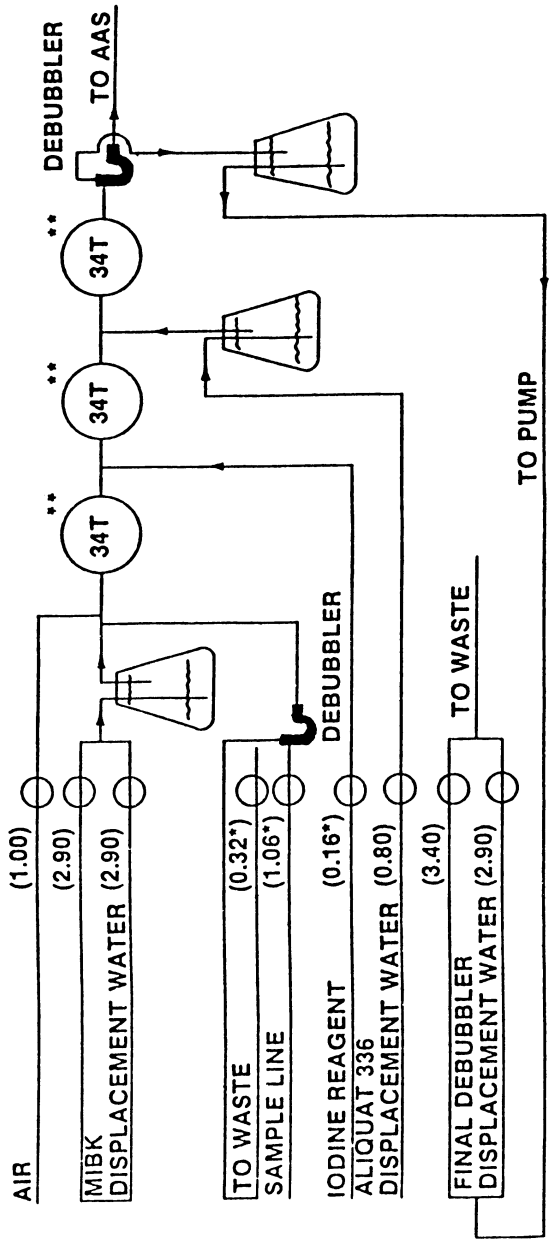

Figure 1

Flow Diagram for the Automated System. (*: Solvaflex pump tubing, **: Technicon part no. 157-0225) Numbers in parentheses refer to the flow rate (ml/min.).

METHOD 3—TEST FOR LEAD IN GASOLINE BY X-RAY SPECTROMETRY

1. Scope and application.

1.1 This method covers the determination of the total lead content of gasoline. The procedure's calibration range is 0.010 to 5.0 grams of lead/U.S. gallon. Samples above this level should be diluted to fall within the range of 0.05 to 5.0 grams of lead/U.S. gallon. The method compensates for variations in gasoline composition and is independent of lead alkyl type.

1.2 This method may be used as an alternative to Method 1—Standard Method Test for Lead in Gasoline by Atomic Absorption Spectrometry, or to Method 2—Automated Method Test for Lead in Gasoline by Atomic Absorption Spectrometry.

1.3 Where trade names or specific products are noted in the method, equivalent apparatus and chemical reagents may be used. Mention of trade names or specific products is for the assistance of the user and does not constitute endorsement by the U.S. Environmental Protection Agency.

2. Summary of method.

2.1 A portion of the gasoline sample is placed in an appropriate holder and loaded into an X-ray spectrometer. The ratio of the net X-ray intensity of the lead L alpha radiation to the net intensity of the incoherently scattered tungsten L alpha radiation is measured. The lead content is determined by reference to a linear calibration equation which relates the lead content to the measured ratio.

2.2 The incoherently scattered tungsten radiation is used to compensate for variations in gasoline samples.

3. Sample handling and preservation.

3.1 Samples should be collected and stored in containers which will protect them from changes in the lead content of the gasoline, such as loss of volatile fractions of the gasoline by evaporation or leaching of the lead into the container or cap.

3.2 If samples have been refrigerated they should be brought to room temperature prior to analysis.

3.3 Gasoline is extremely flammable and should be handled cautiously and with adequate ventilation. The vapors are harmful if inhaled and prolonged breathing of vapors should be avoided. Skin contact should be minimized. See precautionary statements in Annex A1.3.

4. Apparatus.

4.1 X-ray Spectrometer, capable of exciting and measuring the fluorescence lines mentioned in 2.1 and of being operated under the following instrumental conditions or others giving equivalent results: a tungsten target tube operated at 50 kV, a lithium fluoride analyzing crystal, an air or helium optical path and a proportional or scintillation detector.

4.2 Some manufacturers of X-ray Spectrometer units no longer allow use of air as the beam path medium because the X-ray beam produces ozone, which may degrade seals and electronics. In addition, use of the equipment with liquid gasoline in close proximity to the hot X-ray tube could pose flammability problems with any machine in case of a rupture of the sample container. Therefore, use of the helium alternative is recommended.

5. Reagents.

5.1 Isooctane. Isooctane is flammable and the vapors may be harmful. See precautions in Annex A1.1.

5.2 Lead standard solution, in isooctane, toluene or a mixture of these two solvents, containing approximately 5 gm Pb/U.S. gallon may be prepared from a lead-in-oil concentrate such as those prepared by Conostan (Conoco, Inc., Ponca City, Oklahoma). Isooctane and toluene are flammable and the vapors may be harmful. See precautionary statements in Annex A1.1 and A1.2.

6. Calibration.

6.1 Make exact dilutions with isooctane of the lead standard solution to give solutions with concentrations of 0.01, 0.05, 0.10, 0.50, 1.0, 3.0 and 5.0 g Pb/U.S. gallon. If a more limited range is desired as required for linearity, such range shall be covered by at least five standard solutions approximately equally spaced and this range shall not be exceeded by any of the samples. Place each of the standard solutions in a sample cell using techniques consistent with good operating practice for the spectrometer employed. Insert the sample in the spectrometer and allow the spectrometer atmosphere to reach equilibrium (if appropriate). Measure the intensity of the lead L alpha peak at 1.175 angstroms, the Compton scatter peak of the tungsten L alpha line at 1.500 angstroms and the background at 1.211 angstroms. Each measured intensity should exceed 200,000 counts or the time of measurement should be at least 30 seconds. The relative standard deviation of each measurement, based on counting statistics, should be one percent or less. The Compton scatter peak given above is for 90° instrument geometry and should be changed for other geometries. The Compton scatter peak (in angstroms) is found at the wavelength of the tungsten L alpha line plus 0.024 (1-cos phi), where phi is the angle between the incident radiation and the take-off collimator.

6.2 For Each of the standards, as well as for an isooctane blank, determine the net lead intensity by subtracting the corrected

background from the gross intensity. Determine the corrected background by multiplying the intensity of the background at 1.211 angstroms by the following ratio obtained on an isooctane blank:

$$\frac{\text{Background at 1.175 angstroms}}{\text{Background at 1.211 angstroms}}$$

6.3 Determine the corrected lead intensity ratio, which is the net lead intensity corrected for matrix effects by division by the net incoherently scattered tungsten radiation. The net scattered intensity is calculated by subtracting the background intensity at 1.211 angstroms from the gross intensity of the incoherently scattered tungsten L alpha peak. The equation for the corrected lead intensity ratio follows:

$$R = \frac{\text{Lead L alpha–background}}{\text{Incoherent tungsten L alpha–corrected background}}$$

6.4 Obtain a linear calibration curve by performing a least squares fit of the corrected lead intensity ratios to the standard concentrations.

7. Procedure.

7.1 Prepare a calibration curve as described in 6. Since the scattered tungsten radiation serves as an internal standard, the calibration curve should serve for at least several days. Each day the suitability of the calibration curve should be checked by analyzing several National Bureau of Standards (NBS) lead-in-reference-fuel standards or other suitable standards.

7.2 Determine the corrected lead intensity ratio for a sample in the same manner as was done for the standards. The samples should be brought to room temperature before analysis.

7.3 Determine the lead concentration of the sample from the calibration curve. If the sample concentration is greater than 5.0 g Pb/U.S. gallon or the range calibrated for in 6.1, the sample should be diluted so that the result is within the calibration span of the instrument.

7.4 Quality control standards, such as NBS standard reference materials, should be analyzed at least once every testing session.

7.5 For each group of ten samples, a spiked sample should be prepared by adding a known amount of lead to a sample. This known addition should be at least 0.05 g Pb/U.S. gallon, at least 50% of the measured lead content of the unspiked sample, and not more than 200% of the measured lead content of the unspiked sample (unless the minimum addition of 0.05 g Pb/U.S. gallon exceeds 200%). Both the spiked and unspiked samples should be analyzed.

8. Quality control.

8.1 The difference between duplicates should not exceed 0.005 g Pb/U.S. gallon or a relative difference of 6%.

8.2 All quality control standard check samples should agree within 10% of the nominal value of the standard.

8.3 All spiked samples should have a percent recovery of 100% ±10%. The percent recovery, P, is calculated as follows:

$$P = 100 \times (A - B) / K$$

where

A = the analytical result from the spiked sample, B = the analytical result from the unspiked sample, and K = the known addition.

8.4 The difference between independent analyses of the same sample in different laboratories should not exceed 0.01 g Pb/U.S. gallon or a relative difference of 12%.

9. *Past quality control data.*

9.1 Duplicate analysis for 26 samples in the range of 0.01 to 0.10 g Pb/U.S. gallon resulted in an average relative difference of 5.2% with a standard deviation of 5.4%. Duplicate analysis of 14 samples in the range 0.1 to 0.5 g Pb/U.S. gallon resulted in an average relative difference of 2.3% with a standard deviation of 2.0. Duplicate analysis of 47 samples in the range of 0.5 to 5 g Pb/U.S. gallon resulted in an average relative difference of 2.1% with a standard deviation of 1.8%.

9.2 The average percent recovery for 23 spikes made to samples in the 0.0 to 0.1 g Pb/U.S. gallon range was 103% with a standard deviation of 3.2%. For 42 spikes made to samples in the 0.1 to 5.0 g Pb/U.S. gallon range, the average percent recovery was 102% with a standard deviation of 4.2%.

9.3 The analysis of National Bureau of Standards lead-in-reference-fuel standards of known concentrations in a single laboratory has resulted in found values deviating from the true value for 14 determinations of 0.0490 g Pb/U.S. gallon by an average of 2.8% with a standard deviation of 6.4%, for 11 determinations of 0.065 g Pb/U.S. gallon by an average of 4.4% with a standard deviation of 2.9%, and for 15 determinations of 1.994 g Pb/U.S. gallon by an average of 0.3% with a standard deviation of 1.3%.

9.4 Eighteen analyses of reference samples (U.S. EPA, Research Triangle Park, NC) have resulted in found values differing from the true value by an average of 0.0004 g Pb/U.S. gallon with a standard deviation of 0.004 g Pb/U.S. gallon.

ANNEX

A1. Precautionary Statements

A1.1 Isooctane

Danger—Extremely flammable. Vapors harmful if inhaled.
Vapor may cause flash fire.
Keep away from heat, sparks, and open flame.
Vapors are heavier than air and may gather in low places, resulting in explosion hazard.
Keep container closed.
Use adequate ventilation.
Avoid buildup of vapors.
Avoid prolonged breathing of vapor or spray mist.
Avoid prolonged or repeated skin contact.

A1.2 Toluene

Warning—Flammable. Vapor harmful.
Keep away from heat, sparks, and open flame.
Keep container closed.
Use with adequate ventilation.
Avoid breathing of vapor or spray mist.
Avoid prolonged or repeated contact with skin.

A1.3 Gasoline

Danger—Extremely flammable. Vapors harmful if inhaled.
Vapor may cause flash fire.
Keep away from heat, sparks, and open flame.
Vapors are heavier than air and may gather in low places, resulting in explosion hazard.
Keep container closed.
Use adequate ventilation.
Avoid buildup of vapors.
Avoid prolonged breathing of vapor or spray mist.
Avoid prolonged or repeated skin contact.

[39 FR 24891, July 8, 1974; 39 FR 25653, July 12, 1974; 39 FR 26287, July 18, 1974, as amended at 47 FR 765, Jan. 7, 1982; 52 FR 259, Jan. 5, 1987; 56 FR 13768, Apr. 4, 1991]

APPENDIXES C–G TO PART 80
[RESERVED]