AUTHENTICATED
U.S. GOVERNMENT
INFORMATION
GPO

APPENDIX B TO SUBPART D OF PART 91—FIGURES

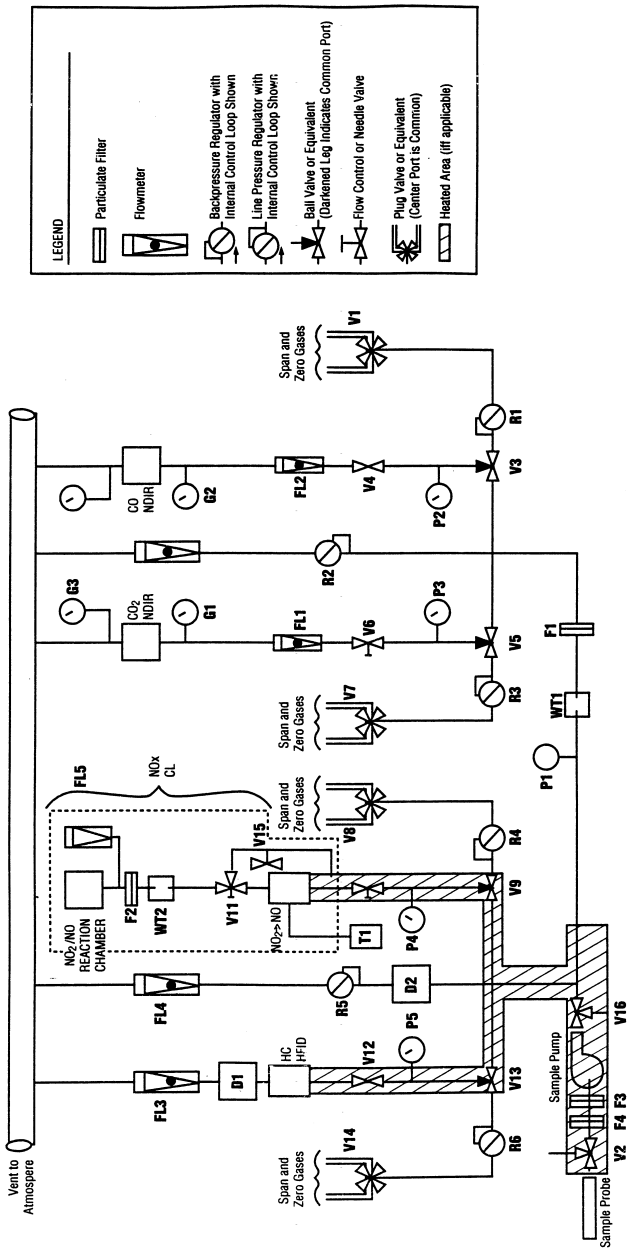

Figure 1. — Exhaust Gas Sampling and Analytical Train, Continuous Sampling

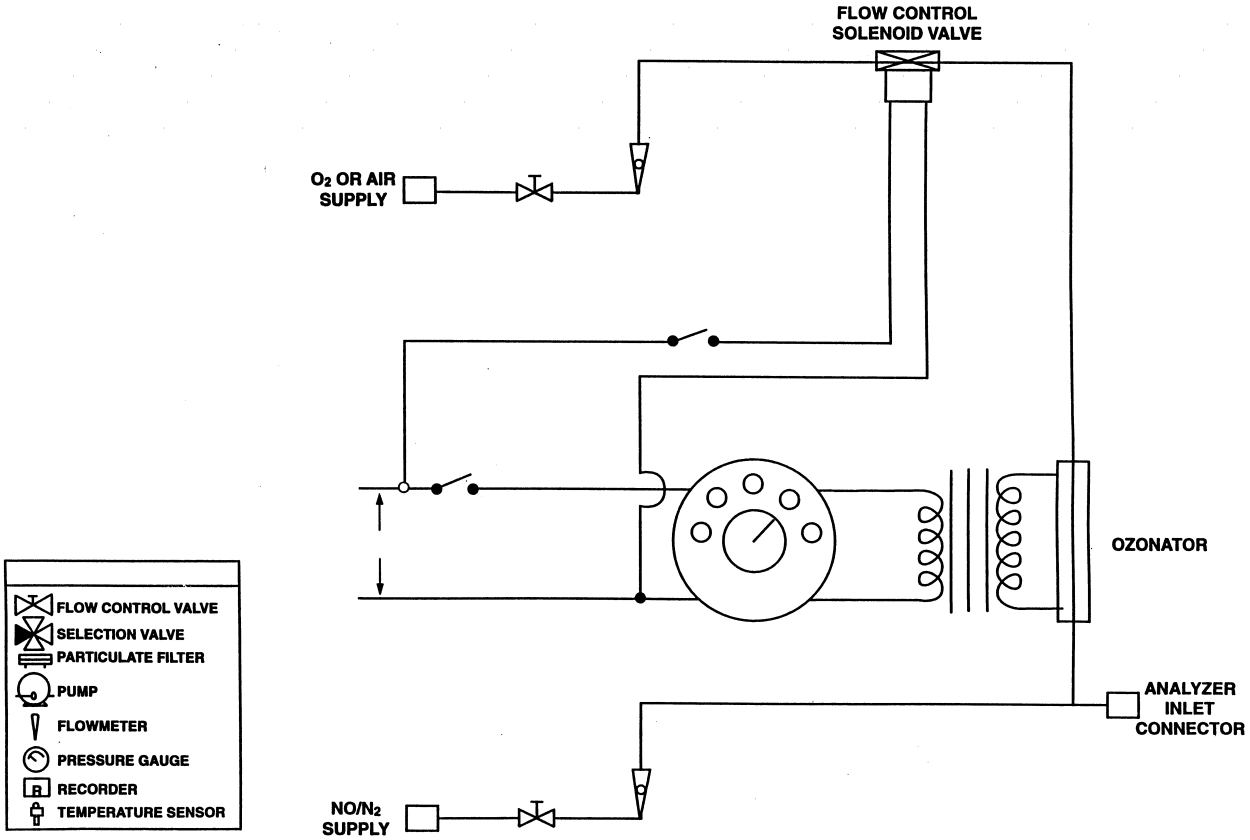

Figure 2. — NOx Converter Efficiency Detector