AUTHENTICATED
U.S. GOVERNMENT
INFORMATION
GPO

§§ 90.1208–90.1249 [Reserved]

PART 91—CONTROL OF EMISSIONS FROM MARINE SPARK-IGNITION ENGINES

Subpart A—General

Sec.
91.1 Applicability.
91.2 Applicable date.
91.3 Definitions.
91.4 Acronyms and abbreviations.
91.5 Table and figure numbering; position.
91.6 Reference materials.
91.7 Treatment of confidential information.

Subpart B—Emission Standards and Certification Provisions

91.101 Applicability.
91.102 Definitions.
91.103 Averaging, banking, and trading of exhaust emission credits.
91.104 Exhaust emission standards for outboard and personal watercraft engines.
91.105 Useful life period, recall, and warranty periods.
91.106 Certificate of conformity.
91.107 Application for certification.
91.108 Certification.
91.109 Requirement of certification—closed crankcase.
91.110 Requirement of certification—prohibited controls.
91.111 Requirement of certification—prohibition of defeat devices.
91.112 Requirement of certification—adjustable parameters.
91.113 Requirement of certification—emission control information label and engine identification number.
91.114 Requirement of certification—supplying production engines upon request.
91.115 Certification procedure—determining engine power and engine families.
91.116 Certification procedure—test engine selection.
91.117 Certification procedure—service accumulation.
91.118 Certification procedure—testing.
91.119 Certification procedure—use of special test procedures.
91.120 Compliance with Family Emission Limits over useful life.
91.121 Certification procedure—recordkeeping.
91.122 Amending the application and certificate of conformity.
91.123 Denial, revocation of certificate of conformity.
91.124 Request for hearing.
91.125 Hearing procedures.
91.126 Right of entry and access.

Subpart C—Averaging, Banking, and Trading Provisions

91.201 Applicability.
91.202 Definitions.
91.203 General provisions.
91.204 Averaging.
91.205 Banking.
91.206 Trading.
91.207 Credit calculation and manufacturer compliance with emission standards.
91.208 Certification.
91.209 Maintenance of records.
91.210 End-of-year and final reports.
91.211 Notice of opportunity for hearing.

Subpart D—Emission Test Equipment Provisions

91.301 Scope; applicability.
91.302 Definitions.
91.303 Acronyms and abbreviations.
91.304 Test equipment overview.
91.305 Dynamometer specifications and calibration accuracy.
91.306 Dynamometer torque cell calibration.
91.307 Engine cooling system.
91.308 Lubricating oil and test fuel.
91.309 Engine intake air temperature measurement.
91.310 Engine intake air humidity measurement.
91.311 Test conditions.
91.312 Analytical gases.
91.313 Analyzers required.
91.314 Analyzer accuracy and specifications.
91.315 Analyzer initial calibration.
91.316 Hydrocarbon analyzer calibration.
91.317 Carbon monoxide analyzer calibration.
91.318 Oxides of nitrogen analyzer calibration.
91.319 NO_X converter check.
91.320 Carbon dioxide analyzer calibration.
91.321 NDIR analyzer calibration.
91.322 Calibration of other equipment.
91.323 Analyzer bench checks.
91.324 Analyzer leakage check.
91.325 Analyzer interference checks.
91.326 Pre- and post-test analyzer calibration.
91.327 Sampling system requirements.
91.328 Measurement equipment accuracy/calibration frequency table.
91.329 Catalyst thermal stress test.
APPENDIX A TO SUBPART D OF PART 91—FIGURES
APPENDIX B TO SUBPART D OF PART 91—FIGURES

Subpart E—Gaseous Exhaust Test Procedures

91.401 Scope; applicability.
91.402 Definitions.
91.403 Symbols and abbreviations.
91.404 Test procedure overview.

91.405 Recorded information.
91.406 Engine parameters to be measured and recorded.
91.407 Engine inlet and exhaust systems.
91.408 Pre-test procedures.
91.409 Engine dynamometer test run.
91.410 Engine test cycle.
91.411 Post-test analyzer procedures.
91.412 Data logging.
91.413 Exhaust sample procedure—gaseous components.
91.414 Raw gaseous exhaust sampling and analytical system description.
91.415 Raw gaseous sampling procedures.
91.416 Intake air flow measurement specifications.
91.417 Fuel flow measurement specifications.
91.418 Data evaluation for gaseous emissions.
91.419 Raw emission sampling calculations.
91.420 CVS concept of exhaust gas sampling system.
91.421 Dilute gaseous exhaust sampling and analytical system description.
91.423 Exhaust gas analytical system; CVS grab sample.
91.424 Dilute sampling procedure—CVS calibration.
91.425 CVS calibration frequency.
91.426 Dilute emission sampling calculations.
91.427 Catalyst thermal stress resistance evaluation.

APPENDIX A TO SUBPART E OF PART 91—TABLES
APPENDIX B TO SUBPART E OF PART 91—FIGURES

Subpart F—Manufacturer Production Line Testing Program

91.501 Applicability.
91.502 Definitions.
91.503 Production line testing by the manufacturer.
91.504 Maintenance of records; submittal of information.
91.505 Right of entry and access.
91.506 Engine sample selection.
91.507 Test procedures.
91.508 Cumulative Sum (CumSum) procedure.
91.509 Calculation and reporting of test results.
91.510 Compliance with criteria for production line testing.
91.511 Suspension and revocation of certificates of conformity.
91.512 Request for public hearing.
91.513 Administrative procedures for public hearing.
91.514 Hearing procedures.
91.515 Appeal of hearing decision.
91.516 Treatment of confidential information.

Subpart G—Selective Enforcement Auditing Regulations

91.601 Applicability.
91.602 Definitions.
91.603 Applicability of part 91, subpart F.
91.604 Test orders.
91.605 Testing by the Administrator.
91.606 Sample selection.
91.607 Test procedures.
91.608 Compliance with acceptable quality level and passing and failing criteria for selective enforcement audits.

APPENDIX A TO SUBPART G OF PART 91—SAMPLING PLANS FOR SELECTIVE ENFORCEMENT AUDITING OF MARINE ENGINES

Subpart H—Importation of Nonconforming Marine Engines

91.701 Applicability.
91.702 Definitions.
91.703 Admission.
91.704 Exemptions and exclusions.
91.705 Prohibited acts; penalties.
91.706 Treatment of confidential information.

Subpart I—In-Use Testing and Recall Regulations

91.801 Applicability.
91.802 Definitions.
91.803 Manufacturer in-use testing program.
91.804 Maintenance, procurement and testing of in-use engines.
91.805 In-use test program reporting requirements.
91.806 Voluntary emissions recall.

Subpart J—Emission-Related Defect Reporting Requirements, Voluntary Emission Recall Program

91.901 Applicability.
91.902 Definitions.
91.903 Applicability to part 85, subpart T.
91.904 Voluntary emission recall.
91.905 Reports, voluntary recall plan filing, record retention.
91.906 Responsibility under other legal provisions preserved.
91.907 Disclaimer of production warranty applicability.

Subpart K—Exclusion and Exemption of Marine SI Engines

91.1001 Applicability.
91.1002 Definitions.
91.1003 Exclusions based on section 216(10) of the Act.
91.1004 Who may request an exemption.
91.1005 Testing exemption.
91.1006 Manufacturer-owned exemption and precertification exemption.
91.1007 Display exemption.

91.1008 National security exemption.
91.1009 Export exemptions.
91.1010 Granting of exemptions.
91.1011 Submission of exemption requests.
91.1012 Treatment of confidential information.
91.1013 Exemption for certified Small SI engines.

Subpart L—Prohibited Acts and General Enforcement Provisions

91.1101 Applicability.
91.1102 Definitions.
91.1103 Prohibited acts.
91.1104 General enforcement provisions.
91.1105 Injunction proceedings for prohibited acts.
91.1106 Penalties.
91.1107 Warranty provisions.
91.1108 In-use compliance provisions.

Subpart M—Emission Warranty and Maintenance Instructions

91.1201 Applicability.
91.1202 Definitions.
91.1203 Emission warranty, warranty period.
91.1204 Furnishing of maintenance and use instructions to ultimate purchaser.

Subpart N—In-Use Credit Program for New Marine Engines

91.1301 Applicability.
91.1302 Definitions.
91.1303 General provisions.
91.1304 Averaging.
91.1305 Banking.
91.1306 Trading.
91.1307 Credit calculation.
91.1308 Maintenance of records.
91.1309 Reporting requirements.
91.1310 Notice of opportunity for hearing.

AUTHORITY: 42 U.S.C. 7401–7671q.

SOURCE: 61 FR 52102, Oct. 4, 1996, unless otherwise noted.

EFFECTIVE DATE NOTE: At 61 FR 52102, Oct. 4, 1996, part 91 was added, effective Dec. 3, 1996. This part contains information collection and recordkeeping requirements that will not become effective until approval has been given by the Office of Management and Budget.

Subpart A—General

§91.1 Applicability.

(a) This part and all its subparts apply to marine spark-ignition engines used to propel marine vessels as defined in the General Provisions of the United States Code, 1 U.S.C.3 (1992), unless otherwise indicated.

(b) Sterndrive and inboard engines are exempt from this part.

(c) Existing technology OB/PWC are exempt from §91.112 and subparts D, E, F, G, I (§§91.803 through 91.805), J, M and N through model year 2003.

(d) This part does not apply to engines that are subject to emission standards under 40 CFR part 1045. See 40 CFR 1045.1 to determine when that part 1045 applies. Note that certain requirements and prohibitions apply to engines built on or after January 1, 2010 if they are installed in equipment that will be used solely for competition, as described in 40 CFR 1045.1 and 40 CFR 1068.1; those provisions apply instead of the provisions of this part 91.

[61 FR 52102, Oct. 4, 1996, as amended at 73 FR 59183, Oct. 8, 2008]

§91.2 Applicable date.

This part applies to marine spark-ignition engines beginning with the 1998 model year, except where otherwise specified.

§91.3 Definitions.

The following definitions apply to this part 91. All terms not defined herein have the meaning given them in the Act.

Act means the Clean Air Act, as amended, 42 U.S.C. 7401 *et seq*.

Adjustable parameter means any device, system, or element of design which is physically capable of being adjusted (including those which are difficult to access) and which, if adjusted, may affect emissions or engine performance during emission testing or normal in-use operation.

Administrator means the Administrator of the Environmental Protection Agency or his or her authorized representative.

Amphibious vehicle means a vehicle with wheels or tracks that is designed primarily for operation on land and secondarily for operation in water.

Auxiliary emission control device means any element of design that senses temperature, engine speed, engine RPM, transmission gear, or any other parameter for the purpose of activating, modulating, delaying, or deactivating the operation of any part of the emission control system.

Certification means, with respect to new SI marine engines, obtaining a certificate of conformity for an engine family complying with the marine SI engine emission standards and requirements specified in this part.

Emission control system means any device, system, or element of design which controls or reduces the emission of substances from an engine.

Engine as used in this part, refers to marine SI engine.

Engine family means a group of engines, as specified in § 91.115.

EPA enforcement officer means any officer, employee, or authorized representative of the U.S. Environmental Protection Agency so designated in writing by the Administrator (or by his or her designee).

Exhaust emissions means matter emitted into the atmosphere from any opening downstream from the exhaust port of a marine engine.

Existing technology OB/PWC means an outboard engine or a personal watercraft engine which was in production for the 1997 or any previous model years and that did not utilize newer technologies such as four-stroke technology, direct-injection two-stroke technology, catalyst technology, or other technology used to comply with emission standards which the Administrator determines is a new type of OB/PWC technology.

Family Emission Limit (*FEL*) means an emission level that is declared by the manufacturer to serve in lieu of an emission standard for certification and for the averaging, banking, and trading program. A FEL must be expressed to the same number of decimal places as the applicable emission standard.

Fuel system means all components involved in the transport, metering, and mixture of the fuel from the fuel tank to the combustion chamber(s) including the following: Fuel tank, fuel tank cap, fuel pump, fuel lines, oil injection metering system, carburetor or fuel injection components, and all fuel system vents.

Gross power means the power measured at the crankshaft or its equivalent (for outboards, the power may be measured at the propeller shaft), the engine being equipped only with the standard accessories (such as oil pumps, coolant pumps, and so forth) necessary for its operation on the test bed.

Identification number means a unique specification (for example, model number/serial number combination) which allows a particular marine SI engine to be distinguished from other similar engines.

Inboard engine means a four stroke marine SI engine that is designed such that the propeller shaft penetrates the hull of the marine vessel while the engine and the remainder of the drive unit is internal to the hull of the marine vessel.

Marine engine means a nonroad engine that is installed or intended to be installed on a marine vessel. This includes a portable auxiliary marine engine only if its fueling, cooling, or exhaust system is an integral part of the vessel. There are two kinds of marine engines:

(1) Propulsion marine engine means a marine engine that moves a vessel through the water or directs the vessel's movement.

(2) Auxiliary marine engine means a marine engine not used for propulsion.

Marine engine manufacturer means any person engaged in the manufacturing or assembling of new marine SI engines or the importing of such engines for resale, or who acts for and is under the control of any such person in connection with the distribution of such engines. A marine SI engine manufacturer does not include any dealer with respect to new marine SI engines received by such person in commerce.

Marine spark-ignition engine means a spark-ignition marine engine that propels a marine vessel.

Marine vessel has the meaning given in 1 U.S.C. 3, except that it does not include amphibious vehicles. The definition in 1 U.S.C. 3 very broadly includes every craft capable of being used as a means of transportation on water.

Marine vessel manufacturer means any person engaged in the manufacturing or assembling of new marine vessels or importing such marine vessels for resale, or who acts for and is under the control of any such person in connection with the distribution of such vehicles. A marine vessel manufacturer

does not include any dealer with respect to new marine vessels received by such person in commerce.

Model year means the manufacturer's annual new model production period which includes January 1 of the calendar year for which the model year is named, ends no later than December 31 of the calendar year, and does not begin earlier than January 2 of the previous calendar year. Where a manufacturer has no annual new model production period, model year means the calendar year.

New, for purposes of this part, means a nonroad engine, nonroad vehicle, or nonroad equipment the equitable or legal title to which has never been transferred to an ultimate purchaser. Where the equitable or legal title to the engine, vehicle or equipment is not transferred to an ultimate purchaser until after the engine, vehicle, or equipment is placed into service, then the engine, vehicle, or equipment will no longer be new after it is placed into service. A nonroad engine, vehicle, or equipment is placed into service when it is used for its functional purposes. With respect to imported nonroad engines, nonroad vehicles, or nonroad equipment, the term ''new'' means an engine, vehicle, or piece of equipment that is not covered by a certificate of conformity issued under this part at the time of importation, and that is manufactured after the effective date of a regulation issued under this part which is applicable to such engine, vehicle, or equipment, or which would be applicable to such engine, vehicle, or equipment had it been manufactured for importation into the United States.

Nonroad engine has the meaning as defined in 40 CFR 89.2.

Nonroad vehicle has the meaning as defined in 40 CFR 89.2.

Nonroad equipment has the meaning as defined in 40 CFR 89.2.

Operating hours means:

(1) For engine storage areas or facilities, all times during which personnel other than custodial personnel are at work in the vicinity of the storage area or facility and have access to it.

(2) For all other areas or facilities, all times during which an assembly line is in operation or all times during which testing, maintenance, service accumulation, production or compilation of records, or any other procedure or activity related to certification testing, to translation of designs from the test stage to the production stage, or to engine manufacture or assembly is being carried out in a facility.

Outboard engine is a marine SI engine that, when properly mounted on a marine vessel in the position to operate, houses the engine and drive unit external to the hull of the marine vessel.

Personal watercraft engine (PWC) is a marine SI engine that does not meet the definition of outboard engine, inboard engine or sterndrive engine, except that the Administrator in his or her discretion may classify a PWC as an inboard or sterndrive engine if it is comparable in technology and emissions to an inboard or sterndrive engine.

Presentation of credentials means the display of the document designating a person as an EPA enforcement officer or EPA authorized representative.

Scheduled maintenance means any adjustment, repair, removal, disassembly, cleaning, or replacement of components or systems required by the manufacturer to be performed on a periodic basis to prevent part failure or marine vessel or engine malfunction, or those actions anticipated as necessary to correct an overt indication of malfunction or failure for which periodic maintenance is not appropriate.

Spark-ignition means relating to a gasoline-fueled engine or any other type of engine with a spark plug (or other sparking device) and with operating characteristics significantly similar to the theoretical Otto combustion cycle. Spark-ignition engines usually use a throttle to regulate intake air flow to control power during normal operation.

Sterndrive engine means a four stroke marine SI engine that is designed such that the drive unit is external to the hull of the marine vessel, while the engine is internal to the hull of the marine vessel.

Test engine means the engine or group of engines that a manufacturer uses during certification, production line and in-use testing to determine compliance with emission standards.

Ultimate purchaser means, with respect to any new marine SI engine the first person who in good faith purchases such new marine SI engine for purposes other than resale.

United States means the States, the District of Columbia, the Commonwealth of Puerto Rico, the Commonwealth of the Northern Mariana Islands, Guam, American Samoa, and the U.S. Virgin Islands.

Used solely for competition means exhibiting features that are not easily removed and that would render its use other than in competition unsafe, impractical, or highly unlikely.

Warranty period means the period of time the engine or part is covered by the warranty provisions.

[61 FR 52102, Oct. 4, 1996, as amended at 67 FR 68340, Nov. 8, 2002; 70 FR 40451, July 13, 2005]

§ 91.4 Acronyms and abbreviations.

The following acronyms and abbreviations apply to this part 91.

AECD—Auxiliary emission control device
ASME—American Society of Mechanical Engineers
ASTM—American Society for Testing and Materials
CAA—Clean Air Act
CAAA—Clean Air Act Amendments of 1990
CLD—chemiluminescent detector
CO—Carbon monoxide
CO_2—Carbon dioxide
EPA—Environmental Protection Agency
FEL—Family Emission Limit
g/kw-hr—grams per kilowatt hour
HC—hydrocarbons
HCLD—heated chemiluminescent detector
HFID—heated flame ionization detector
ICI—Independent Commercial Importer
MY—Model Year
NDIR—non-dispersive infrared analyzer
NIST—National Institute for Standards and Testing
NO—Nitric oxide
NO_2—Nitrogen dioxide
NO_X—Oxides of nitrogen
OB—Outboard engine
O_2—Oxygen
OEM—Original engine manufacturer
PMD—paramagnetic detector
PWC—personal watercraft
RPM—revolutions per minute
SAE—Society of Automotive Engineers
SEA—Selective Enforcement Auditing
SI—Spark-ignition
U.S.C.—United States Code
VOC—Volatile organic compounds
ZROD—zirconium dioxide sensor

§ 91.5 Table and figure numbering; position.

(a) Tables for each subpart appear in an appendix at the end of the subpart. Tables are numbered consecutively by order of appearance in the appendix. The table title will indicate the topic.

(b) Figures for each subpart appear in an appendix at the end of the subpart. Figures are numbered consecutively by order or appearance in the appendix. The figure title will indicate the topic.

§ 91.6 Reference materials.

(a) *Incorporation by reference.* The documents in paragraph (b) of this section have been incorporated by reference. The incorporation by reference was approved by the Director of the Federal Register in accordance with 5 U.S.C. 552(a) and 1 CFR part 51. Copies may be inspected at U.S. EPA, OAR, Air and Radiation Docket and Information Center, 401 M St., SW., Washington, DC 20460, or at the National Archives and Records Administration (NARA). For information on the availability of this material at NARA, call 202–741–6030, or go to: *http://www.archives.gov/federal_register/code_of_federal_regulations/ibr_locations.html.*

(b) The following paragraphs and tables set forth the material that has been incorporated by reference in this part.

(1) *ASTM material.* The following table sets forth material from the American Society for Testing and Materials which has been incorporated by reference. The first column lists the number and name of the material. The second column lists the section(s) of this part, other than § 91.6, in which the matter is referenced. The second column is presented for information only and may not be all inclusive. Copies of these materials may be obtained from American Society for Testing and Materials, 1916 Race St., Philadelphia, PA 19103.

Document number and name	40 CFR part 91 reference
ASTM D86–93:	
Standard Test Method for Distillation of Petroleum Products	Appendix A to Subpart D.

Document number and name	40 CFR part 91 reference
ASTM D323–90:	
Standard Test Method for Vapor Pressure of Petroleum Products (Reid Method).	Appendix A to Subpart D.
ASTM D1319–93:	
Standard Test Method for Hydrocarbon Types in Liquid Petroleum Products by Fluorescent Indicator Adsorption.	Appendix A to Subpart D.
ASTM D2622–92:	
Standard Test Method for Sulfur in Petroleum Products by X-Ray Spectrometry.	Appendix A to Subpart D.
ASTM D2699–92:	
Standard Test Method for Knock Characteristics of Motor Fuels by the Research Method.	Appendix A to Subpart D.
ASTM D2700–92:	
Standard Test Method for Knock Characteristics of Motor and Aviation Fuels by the Motor Method.	Appendix A to Subpart D.
ASTM D3231–89:	
Standard Test Method for Phosphorus in Gasoline	Appendix A to Subpart D.
ASTM D3606–92:	
Standard Test Method for Determination of Benzene and Toluene in Finished Motor and Aviation Gasoline by Gas Chromatography.	Appendix A to Subpart D.
ASTM E29–93a:	
Standard Practice for Using Significant Digits in Test Data to Determine Conformance with Specifications.	91.207; 91.120; 91.509; 91.1307.

(2) *SAE material*. The following table sets forth material from the Society of Automotive Engineers which has been incorporated by reference. The first column lists the number and name of the material. The second column lists the section(s) of this part, other than §91.7, in which the matter is referenced. The second column is presented for information only and may not be all inclusive. Copies of these materials may be obtained from Society of Automotive Engineers International, 400 Commonwealth Dr., Warrendale, PA 15096–0001.

Document number and name	40 CFR part 91 reference
SAE J1228/ISO 8665 November 1991 Small Craft-Marine Propulsion Engine and Systems-Power Measurements and Declarations.	91.104, 91.115; 91.118; 91.207; 91.1307.
SAE J1930 June 1993 Electrical/Electronic Systems Diagnostic Terms, Definitions, Abbreviations and Acronyms.	91.113.
SAE Paper 770141 Optimization of a Flame Ionization Detector for Determination of Hydrocarbon in Diluted Automotive Exhausts, Glenn D. Reschke, 1977.	91.316

§91.7 Treatment of confidential information.

(a) Any manufacturer may assert that some or all of the information submitted pursuant to this part is entitled to confidential treatment as provided by part 2, subpart B, of this chapter.

(b) Any claim of confidentiality must accompany the information at the time it is submitted to EPA.

(c) To assert that information submitted pursuant to this subpart is confidential, a manufacturer must indicate clearly the items of information claimed confidential by marking, circling, bracketing, stamping, or otherwise specifying the confidential information. Furthermore, EPA requests, but does not require, that the submitter also provide a second copy of its submittal from which all confidential information has been deleted. If a need arises to publicly release nonconfidential information, EPA will assume that the submitter has accurately deleted the confidential information from this second copy.

(d) If a claim is made that some or all of the information submitted pursuant to this subpart is entitled to confidential treatment, the information covered by that confidentiality claim will be disclosed by the Administrator only to the extent and by means of the procedures set forth in part 2, subpart B, of this chapter.

(e) Information provided without a claim of confidentiality at the time of submission may be made available to the public by EPA without further notice to the submitter, in accordance with § 2.204(c)(2)(i)(A) of this chapter.

Subpart B—Emission Standards and Certification Provisions

§ 91.101 Applicability.

(a) The requirements of this subpart B are applicable to all engines subject to the provisions of subpart A of this part.

(b) In a given model year, you may ask us to approve the use of procedures for certification, labeling, reporting and recordkeeping, or other administrative requirements specified in 40 CFR part 1045 or 1068 instead of the comparable procedures specified in this part 91. We may approve the request as long as it does not prevent us from ensuring that you fully comply with the intent of this part.

[73 FR 59183, Oct. 8, 2008]

§ 91.102 Definitions.

The definitions in subpart A of this part 91 apply to this subpart. All terms not defined herein or in subpart A of this part have the meaning given them in the Act.

§ 91.103 Averaging, banking, and trading of exhaust emission credits.

Regulations regarding averaging, banking, and trading provisions along with applicable recordkeeping requirements are found in subpart C of this part.

§ 91.104 Exhaust emission standards for outboard and personal watercraft engines.

(a) New marine spark-ignition outboard and personal watercraft engines for use in the U.S. must meet the following exhaust emission standards for $HC+NO_X$. The exhaust emission standard for each model year is provided below. It is also used as input to the calculation procedure in § 91.207 to determine compliance with the corporate average $HC+NO_X$ exhaust emission standard.

HYDROCARBON PLUS OXIDES OF NITROGEN EXHAUST EMISSION STANDARDS

[grams per kilowatt-hour]

Model year	P < 4.3 kW $HC+NO_X$ emission standard by model year	P > 4.3 kW $HC+NO_X$ emission standard by model year
1998	278.00	$(0.917 \times (151 + 557/P^{0.9})) + 2.44$
1999	253.00	$(0.833 \times (151 + 557/P^{0.9})) + 2.89$
2000	228.00	$(0.750 \times (151 + 557/P^{0.9})) + 3.33$
2001	204.00	$(0.667 \times (151 + 557/P^{0.9})) + 3.78$
2002	179.00	$(0.583 \times (151 + 557/P^{0.9})) + 4.22$
2003	155.00	$(0.500 \times (151 + 557/P^{0.9})) + 4.67$
2004	130.00	$(0.417 \times (151 + 557/P^{0.9})) + 5.11$
2005	105.00	$(0.333 \times (151 + 557/P^{0.9})) + 5.56$
2006 and later	81.00	$(0.250 \times (151 + 557/P^{0.9})) + 6.00$

where:

P = the average power of an engine family in kW (sales weighted). The power of each configuration is the rated output in kilowatts as determined by SAE J1228. This procedure has been incorporated by reference. See § 91.6.

(b) Exhaust emissions are measured using the procedures set forth in subpart E of this part.

(c) Manufacturers must designate a Family Emission Limit (FEL) for $HC+NO_X$ for every engine family. The FEL may be equal to the emission standard in paragraph (a) of this section. The FEL established through certification serves as the emission standard for the engine family and emissions may not exceed the FEL levels for $HC+NO_X$ for all engines sold in the engine family, for their useful life.

(d) A manufacturer must comply with a corporate average $HC+NO_X$ emission standard as determined in accordance with subpart C § 91.207.

§91.105 Useful life period, recall, and warranty periods.

(a) The useful life for PWC engines is a period of 350 hours of operation or 5 years of use, whichever first occurs. The useful life for Outboard marine spark-ignition engines is a period of 350 hours of operation or 10 years of use, whichever first occurs.

(b) PWC engines are subject to recall testing for a period of 350 hours of operation or 5 years of use, whichever first occurs. Outboard marine spark-ignition engines are subject to recall testing for a period of 350 hours of operation or 10 years of use, whichever first occurs. However, for purposes of this part only, if the Administrator should issue a nonconformity determination, then only those engines that are within the useful life as of the date of the nonconformity determination are subject to recall repair requirements.

(c) Warranty periods are set out in subpart M of this part.

§91.106 Certificate of conformity.

(a) Every manufacturer of a new marine SI engine produced during or after the 1998 model year for outboard engines and the 1999 model year for PWC engines, must obtain a certificate of conformity covering each engine family. The certificate of conformity must be obtained from the Administrator prior to selling, offering for sale, introducing into commerce, or importing into the United States the new marine SI engine.

(b) The certificate of conformity is valid for the model year for which it is designated.

§91.107 Application for certification.

(a) For each engine family, the engine manufacturer must submit to the Administrator a completed application for a certificate of conformity, except that with respect to an existing technology OB/PWC engine a manufacturer may, in lieu of providing such application, submit to the Administrator summary testing and other information as determined by the Administrator.

(b) The application must be approved and signed by the authorized representative of the manufacturer.

(c) The application must be updated and corrected by amendment as provided in §91.122 to accurately reflect the manufacturer's production.

(d) Required content. Each application must include the following information:

(1) A description of the basic engine design including, but not limited to, the engine family specifications;

(2) An explanation of how the emission control system operates, including a detailed description of all emission control system components (detailed component calibrations are not required to be included, however they must be provided if requested), each auxiliary emission control device (AECD), and all fuel system components to be installed on any production or test engine(s);

(3) Proposed test fleet selection and the rationale for the test fleet selection;

(4) Special or alternative test procedures, if applicable;

(5) The description of the operating cycle and the service accumulation period necessary to break in the test engine(s) and stabilize emission levels and any maintenance scheduled;

(6) A description of all adjustable operating parameters, including the following:

(i) The nominal or recommended setting and the associated production tolerances;

(ii) The intended physically adjustable range;

(iii) The limits or stops used to establish adjustable ranges;

(iv) Production tolerances of the limits or stops used to establish each physically adjustable range; and

(v) Information relating to why the physical limits or stops used to establish the physically adjustable range of each parameter, or any other means used to inhibit adjustment, are effective in preventing adjustment of parameters to settings outside the manufacturer's intended physically adjustable ranges on in-use engines;

(7) Regarding the averaging, banking, and trading provisions, the information specified in §91.208;

(8) The proposed maintenance and use instructions the manufacturer will furnish to the ultimate purchaser of each new engine and the proposed emission control label;

(9) All test data, for HC, CO and NO_X. obtained by the manufacturer on each test engine;

(10) A statement that the test engine(s), as described in the manufacturer's application for certification, has been tested in accordance with the applicable test procedures, utilizing the fuels and equipment described in the application, and that on the basis of such tests the engine(s) conforms to the requirements of this part; and

(11) An unconditional statement certifying that all engines in the engine family comply with all requirements of this part and the Clean Air Act.

(12) Identification of an agent for service located in the United States. Service on this agent constitutes service on you or any of your officers or employees for any action by EPA or otherwise by the United States related to the requirements of this part.

(e) At the Administrator's request, the manufacturer must supply such additional information as may be required to evaluate the application including, but not limited to, projected marine SI engine production.

(f) (1) The Administrator may modify the information submission requirements of paragraph (d) of this section, provided the information specified therein is maintained by the engine manufacturer as required by § 91.121, and amended, updated, or corrected as necessary.

(2) For the purposes of this paragraph, § 91.121(a)(1) includes all information specified in paragraph (d) of this section whether or not such information is actually submitted to the Administrator for any particular model year.

(3) The Administrator may review an engine manufacturer's records at any time.

[61 FR 52102, Oct. 4, 1996, as amended at 73 FR 59183, Oct. 8, 2008]

§ 91.108 Certification.

(a) If, after a review of the manufacturer's submitted application, or with respect to an existing technology OB/PWC engine manufacturer's summary information submitted pursuant to § 91.107(a), information obtained from any inspection, and such other information as the Administrator may require, the Administrator determines that the application or summary information is complete and that the engine family meets the requirements of this part and the Clean Air Act, the Administrator shall issue a certificate of conformity for the engine family.

(b) The Administrator shall give a written explanation when certification is denied. The manufacturer may request a hearing on a denial. (*See* § 91.124 for procedure.)

§ 91.109 Requirement of certification—closed crankcase.

(a) An engine's crankcase must be closed.

(b) For purposes of this section, *crankcase* means the housing for the crankshaft and other related internal parts.

§ 91.110 Requirement of certification—prohibited controls.

(a) An engine may not be equipped with an emission control device, system, or element of design for the purpose of complying with emission standards if such device, system, or element of design will cause or contribute to an unreasonable risk to public health, welfare, or safety in its operation or function.

(b) You may not design your engines with emission-control devices, systems, or elements of design that cause or contribute to an unreasonable risk to public health, welfare, or safety while operating. For example, this would apply if the engine emits a noxious or toxic substance it would otherwise not emit that contributes to such an unreasonable risk.

[61 FR 52102, Oct. 4, 1996, as amended at 67 FR 68340, Nov. 8, 2002]

§ 91.111 Requirement of certification—prohibition of defeat devices.

(a) An engine may not be equipped with a defeat device.

(b) For purposes of this section, *defeat device* means any device, system, or element of design which senses operation outside normal emission test conditions and reduces emission control effectiveness.

(1) Defeat device includes any auxiliary emission control device (AECD) that reduces the effectiveness of the

emission control system under conditions which may reasonably be expected to be encountered in normal operation and use, unless such conditions are included in the test procedure.

(2) Defeat device does not include such items which either operate only during engine starting or are necessary to protect the engine (or vehicle or equipment in which it is installed) against damage or accident during its operation.

§91.112 Requirement of certification—adjustable parameters.

(a) Engines equipped with adjustable parameters must comply with all requirements of this subpart for any adjustment in the physically available range.

(b) An operating parameter is not considered adjustable if it is permanently sealed by the manufacturer or otherwise not normally accessible using ordinary tools.

(c) The Administrator may require that adjustable parameters be set to any specification within the adjustable range during certification, production line testing, selective enforcement auditing or any in-use testing to determine compliance with the requirements of this part.

§91.113 Requirement of certification—emission control information label and engine identification number.

(a) The engine manufacturer must affix at the time of manufacture a permanent and legible label identifying each engine. The label must meet the following requirements:

(1) Be attached in such a manner that it cannot be removed without destroying or defacing the label;

(2) Be durable and readable for the entire engine life;

(3) Be secured to an engine part necessary for normal engine operation and not normally requiring replacement during engine life;

(4) Be written in English; and

(5) Be located so as to be readily visible to the average person after the engine is installed in the marine vessel.

(b) If the marine vessel obscures the label on the engine, the marine vessel manufacturer must attach a supplemental label so that this label is readily visible to the average person. The supplemental label must:

(1) Be attached in such a manner that it cannot be removed without destroying or defacing the label;

(2) Be secured to a marine vessel part necessary for normal operation and not normally requiring replacement during the marine vessel life; and

(3) Be identical to the label which was obscured.

(c) The label must contain the following information:

(1) The heading ''Emission Control Information;''

(2) The full corporate name and trademark of the engine manufacturer;

(3) The statement, ''This (vessel's engine or engine, as applicable) is certified to operate on (specify operating fuel(s));''

(4) Identification of the Exhaust Emission Control System (Abbreviations may be used and must conform to the nomenclature and abbreviations provided in SAE J1930. This procedure has been incorporated by reference. *See* §91.6.;

(5) All engine lubricant requirements;

(6) date of manufacture [day(optional), month and year];

(7) The statement ''This engine conforms to [model year] U.S. EPA regulations for marine SI engines.'';

(8) Family Emission Limits (FELs);

(9) EPA standardized engine family designation;

(10) Engine displacement [in cubic centimeters]; and

(11) Advertised power;

(12) Engine tuneup specifications and adjustments. These should indicate the proper transmission position during tuneup, and accessories, if any, that should be in operation;

(13) Fuel requirements;

(14) Other information concerning proper maintenance and use or indicating compliance or noncompliance with other standards may be indicated on the label.

(d) If there is insufficient space on the engine to accommodate a label including all the information required in paragraph (c) of this section, the manufacturer may delete or alter the label as indicated in this paragraph. The information deleted from the label must appear in the owner's manual.

(1) Exclude the information required in paragraphs (c) (3), (4), and (5) of this section. The fuel or lubricant may be specified elsewhere on the equipment.

(2) Exclude the information required by paragraph (c)(6) of this section, if the date the engine was manufactured is stamped on the engine.

(3) For existing technology OB/PWC only, exclude the information required by paragraphs (c) (10), (11), (13), and (14) of this section.

(e) The Administrator may, upon request, waive or modify the label content requirements of paragraphs (c) and (d) of this section, provided that the intent of such requirements is met.

(f) Engine Identification Number. Each engine must have a legible, unique engine identification number permanently affixed to or engraved on the engine.

§ 91.114 Requirement of certification—supplying production engines upon request.

Upon the Administrator's request, the manufacturer must supply a reasonable number of production engines for testing and evaluation. These engines must be representative of typical production and supplied for testing at such time and place and for such reasonable periods as the Administrator may require.

§ 91.115 Certification procedure—determining engine power and engine families.

(a) Engine power must be calculated using SAE J1228. This procedure has been incorporated by reference. *See* § 91.6.

(b) The manufacturer's product line must be divided into engine families as specified by paragraph (c) of this section, comprised of engines expected to have similar emission characteristics throughout their useful life periods.

(c) To be classed in the same engine family, engines must be identical in all of the following applicable respects:

(1) The combustion cycle;

(2) The cooling mechanism;

(3) The cylinder configuration (inline, vee, opposed, bore spacings, and so forth);

(4) The number of cylinders;

(5) The number of catalytic converters, location; volume, and composition; and

(6) The thermal reactor characteristics.

(d) At the manufacturer's request, engines identical in all the respects listed in paragraph (c) of this section may be further divided into different engine families if the Administrator determines that they may be expected to have different emission characteristics. This determination is based upon the consideration of features such as:

(1) The bore and stroke;

(2) The combustion chamber configuration;

(3) The intake and exhaust timing method of actuation (poppet valve, reed valve, rotary valve, and so forth);

(4) The intake and exhaust valve or port sizes, as applicable;

(5) The fuel system;

(6) The exhaust system; and

(7) The method of air aspiration.

(e) Where engines are of a type which cannot be divided into engine families based upon the criteria listed in paragraph (c) of this section, the Administrator shall establish families for those engines based upon the features most related to their emission characteristics.

(f) Upon a showing by the manufacturer that the emission characteristics during the useful life are expected to be similar, engines differing in one or more of the characteristics in paragraph (c) of this section may be grouped in the same engine family.

(g) Upon a showing by the manufacturer that the emission characteristics during the useful life are expected to be dissimilar, engines identical in all the characteristics in paragraph (c) of this section may be divided into separate engine families.

§ 91.116 Certification procedure—test engine selection.

(a) The manufacturer must select, from each engine family, a test engine of a configuration that the manufacturer deems to be most likely to exceed the Family Emission Limit (FEL).

(b) At the manufacturer's option, the criterion for selecting the worst case engine may be that engine configuration which has the highest weighted

brake-specific fuel consumption over the appropriate engine test cycle.

(c) The test engine must be constructed to be representative of production engines.

§91.117 Certification procedure—service accumulation.

(a)(1) Any engine required to be tested under §91.118 must be operated with all emission control systems operating properly for a period sufficient to stabilize emissions prior to such testing.

(2) A manufacturer may elect to consider emission levels as stabilized when the test engine has accumulated 12 hours of service.

(b) No maintenance, other than recommended lubrication and filter changes, may be performed during service accumulation without the Administrator's approval.

(c) Service accumulation is to be performed in a manner using good engineering judgment to ensure that emissions are representative of production engines.

(d) The manufacturer must maintain, and provide to the Administrator if requested, records stating the rationale for selecting a service accumulation period different than 12 hours and records describing the method used to accumulate hours on the test engine(s).

§91.118 Certification procedure—testing.

(a) *Manufacturer testing*. The manufacturer must test the test engine using the specified test procedures and appropriate test cycle. All test results must be reported to the Administrator.

(1) The test procedures to be used are detailed in subpart E of this part.

(2) Emission test equipment provisions are described in subpart D of this part.

(b) *Administrator testing*. (1) The Administrator may require that any one or more of the test engines be submitted to the Administrator, at such place or places as the Administrator may designate, for the purposes of conducting emission tests. The Administrator may specify that testing will be conducted at the manufacturer's facility, in which case instrumentation and equipment specified by the Administrator must be made available by the manufacturer for test operations. Any testing conducted at a manufacturer's facility must be scheduled by the manufacturer as promptly as possible.

(2)(i) Whenever the Administrator conducts a test on a test engine, the results of that test will, unless subsequently invalidated by the Administrator, comprise the official data for the engine and the manufacturer's data will not be used in determining compliance with the Family Emission Limit (FEL).

(ii) Prior to the performance of such a test, the Administrator may adjust or cause to be adjusted any adjustable parameter of the test engine which the Administrator has determined to be subject to adjustment for testing, to any setting within the physically adjustable range of that parameter, to determine whether the engine conforms to the applicable Family Emission Limit (FEL).

(iii) For those engine parameters which the Administrator has not determined to be subject to adjustment for testing, the test engine presented to the Administrator for testing will be calibrated within the production tolerances applicable to the manufacturer specification shown on the engine label, as specified in the application for certification.

(c) *Use of carryover test data*. In lieu of testing, the manufacturer may submit, with the Administrator's approval, emission test data used to certify substantially similar engine families in previous years. This ''carryover'' test data is only allowable if the data shows the test engine would fully comply with the applicable Family Emission Limit (FEL).

(d) *Scheduled maintenance during testing*. No scheduled maintenance may be performed during testing of the engine.

(e) *Unscheduled maintenance on test engines*. (1) Manufacturers may not perform any unscheduled engine, emission control system, or fuel system adjustment, repair, removal, disassembly, cleaning, or replacement on a test engine without the advance approval of the Administrator.

(2) The Administrator may approve such maintenance if:

(i) A preliminary determination has been made that a part failure or system malfunction, or the repair of such failure or malfunction, does not render the engine unrepresentative of engines in use, and does not require direct access to the combustion chamber; and

(ii) A determination has been made that the need for maintenance or repairs is indicated by an overt malfunction such as persistent misfire, engine stall, overheating, fluid leakage, or loss of oil pressure.

(3) Emission measurements may not be used as a means of determining the need for unscheduled maintenance under paragraph (e)(2) of this section.

(4) The Administrator must have the opportunity to verify the extent of any overt indication of part failure (for example, misfire, stall), or an activation of an audible and/or visual signal, prior to the manufacturer performing any maintenance related to such overt indication or signal.

(5) Unless approved by the Administrator prior to use, engine manufacturers may not use any equipment, instruments, or tools to identify malfunctioning, maladjusted, or defective engine components unless the same or equivalent equipment, instruments, or tools are available at dealerships and other service outlets and are used in conjunction with scheduled maintenance on such components.

(6) If the Administrator determines that part failure or system malfunction occurrence and/or repair rendered the engine unrepresentative of production engines, the engine may not be used as a test engine.

(7) Unless waived by the Administrator, complete emission tests are required before and after any engine maintenance which may reasonably be expected to affect emissions.

(f) *Engine failure.* A manufacturer may not use as a test engine any engine which incurs major mechanical failure necessitating disassembly of the engine. This prohibition does not apply to failures which occur after completion of the service accumulation period.

(g) In lieu of providing or generating emission data under this section for existing technology, the Administrator may allow the manufacturer to demonstrate (on the basis of previous emission tests, development tests, or other testing information) that the engine will conform with the applicable FEL.

(h)(1) Manufacturers may select an FEL for existing technology OB/PWC through:

(i) Model year 2000 based on the function $151+557/P^{0.9}$ where P=average power of an engine family in kW (sales weighted). The power of each configuration is the rated output in kilowatts as determined by SAE J1228. (This procedure has been incorporated by reference. See § 91.6). The certificate of conformity would be conditioned by requirements that the manufacturer submit test data, as determined appropriate by the Administrator under § 91.118(h) by the end of model year 2000; that the FEL is revised and approved by EPA to reflect the test data; that the credits associated with the engine family are recalculated based on the difference between the old FEL and the new FEL; and that the new FEL applies to all engines covered by the certificate of conformity; or

(ii) Model year 2003 based on good engineering judgement.

(2) Upon request by the manufacturer, the Administrator has the discretion to extend the time period set forth in paragraph (h)(1) of this section for a specific engine family up to model year 2005 if the Administrator determines that an engine family will be phased out of U.S. production by model year 2005. As a condition to being granted such an extension, the manufacturer must discontinue U.S. production according to the schedule upon which the Administrator based the extension. Failure to do so by the manufacturer will void the certificate of conformity *ab initio*.

(i) A manufacturer request under paragraph (h)(2) of this section must be in writing and must apply to a specific engine family. The request must identify the engine family designation, the rationale supporting the FEL choice, the type of information used as a basis for the FEL (e.g., previous emission tests, development tests), the specific source of the information including when the information was generated, the schedule for phasing the engine family out of U.S. production, and any

other information the Administrator may require.

§91.119 Certification procedure—use of special test procedures.

(a) *Use of special test procedures by EPA.* The Administrator may establish special test procedures for any engine that the Administrator determines is not susceptible to satisfactory testing under the specified test procedures set forth in subpart E of this part.

(b) *Use of alternative test procedures by an engine manufacturer.* (1) A manufacturer may elect to use an alternative test procedure provided that it yields results equivalent to the results from the specified test procedure in subpart E, its use is approved in advance by the Administrator, and the basis for equivalent results with the specified test procedures is fully described in the manufacturer's application.

(2) An engine manufacturer electing to use alternate test procedures is solely responsible for the results obtained. The Administrator may reject data generated under test procedures which do not correlate with data generated under the specified procedures.

(3) A manufacturer may elect to use the test procedures in 40 CFR part 1065 as an alternate test procedure without getting advance approval by the Administrator or meeting the other conditions of paragraph (b)(1) of this section. The manufacturer must identify in its application for certification that the engines were tested using the procedures in 40 CFR part 1065. For any EPA testing with engines subject to standards under this part, EPA will use the manufacturer's selected procedures for mapping engines, generating duty cycles, and applying cycle-validation criteria. For any other parameters, EPA may conduct testing using either of the specified procedures.

(4) Where we specify mandatory compliance with the procedures of 40 CFR part 1065, manufacturers may elect to use the procedures specified in 40 CFR part 86, subpart N, as an alternate test procedure without advance approval by the Administrator.

[61 FR 52102, Oct. 4, 1996, as amended at 70 FR 40451, July 13, 2005; 73 FR 59183, Oct. 8, 2008]

§91.120 Compliance with Family Emission Limits over useful life.

(a) If all test engines representing an engine family have emissions, as determined in paragraph (c)(3)(iii) of this section, less than or equal to the applicable Family Emission Limit (FEL) for each pollutant as determined according to §91.104 (c), that family complies with the Family Emission Limit .

(b) If any test engine representing an engine family has emissions (as determined in paragraph (c)(3)(iii) of this section, greater than the applicable Family Emission Limit for any pollutant as determined according to §91.104(c), that family will be deemed not in compliance with the Family Emission Limits.

(c)(1) The engine Family Emission Limits (FELs) apply to the emissions of engines for their useful lives.

(2) Since emission control efficiency generally decreases with the accumulation of service on the engine, deterioration factors must be used in combination with emission data engine test results as the basis for determining compliance with the standards.

(3)(i) Paragraph (c)(3)(ii) of this section describes the procedure for determining compliance of an engine with family emission limits, based on deterioration factors supplied by the manufacturer.

(ii) Separate exhaust emission deterioration factors, determined by the manufacturer, must be supplied for each engine family. The deterioration factors must be applied as follows:

(A) For marine spark-ignition engines not utilizing aftertreatment technology (for example, catalytic converters), the official exhaust emission results for each emission data engine at the selected test point are adjusted by adding the appropriate deterioration factor to the results. However, if the deterioration factor supplied by the manufacturer is less than zero, it is zero for the purposes of this paragraph.

(B) For marine spark-ignition engines utilizing aftertreatment technology (for example, catalytic converters), the official exhaust emission results for each emission data engine at the selected test point are adjusted

by multiplying the results by the appropriate deterioration factor. However, if the deterioration factor supplied by the manufacturer is less than one, it is one for the purposes of this paragraph.

(iii) The emission values to compare with the Family Emission Limits (FELs) are the adjusted emission values of paragraph (c)(3)(ii) of this section, rounded to the same number of significant figures as contained in the applicable standard in accordance with ASTM E 29–93a, for each emission data engine. This procedure has been incorporated by reference. See § 91.6.

§ 91.121 Certification procedure—recordkeeping.

(a) The engine manufacturer must maintain the following adequately organized records:

(1) Copies of all applications and summary information, as applicable, filed with the Administrator;

(2) A copy of all data obtained through the production line and in-use testing programs; and

(3) A detailed history of each test engine used for certification including the following:

(i) A description of the test engine's construction, including a general description of the origin and buildup of the engine, steps taken to insure that it is representative of production engines, description of components specially built for the test engine, and the origin and description of all emission-related components;

(ii) A description of the method used for engine service accumulation, including date(s) and the number of hours accumulated;

(iii) A description of all maintenance, including modifications, parts changes, and other servicing performed, and the date(s), and reason(s) for such maintenance;

(iv) A description of all emission tests performed, including routine and standard test documentation, as specified in subpart E of this part, date(s), and the purpose of each test;

(v) A description of all tests performed to diagnose engine or emission control performance, giving the date and time of each and the reason(s) for the test; and

(vi) A description of any significant event(s) affecting the engine during the period covered by the history of the test engine but not described by an entry under one of the previous paragraphs of this section.

(b) Routine emission test data, such as test cell temperature and relative humidity at start and finish of test and raw emission results from each mode or test phase, must be retained for a period of one year after issuance of all certificates of conformity to which they relate. All other information specified in paragraph (a) of this section must be retained for a period of eight years after issuance of all certificates of conformity to which they relate.

(c) Records may be kept in any format and on any media, provided that, at the Administrator's request, organized, written records in English are promptly supplied by the manufacturer.

(d) The manufacturer must supply, at the Administrator's request, copies of any engine maintenance instructions or explanations issued by the manufacturer.

§ 91.122 Amending the application and certificate of conformity.

(a) The marine engine manufacturer must notify the Administrator

(1) When either an engine is to be added to a certificate of conformity or changes are to be made to a product line covered by a certificate of conformity which may potentially affect emissions, emissions durability, an emission related part, or the durability of an emission related part. Notification occurs when the manufacturer submits and EPA receives a request to amend the original application prior to either producing such engines or making such changes to a product line. For existing technology OB/PWC engines only, notification may occur periodically but must occur at least on a quarterly basis and may be submitted summarily as determined by the Administrator.

(2) When an FEL is changed for an engine family, as allowed under § 91.203. Notification occurs when the manufacturer submits and EPA receives a request to amend the original application. The manufacturer may not

change an FEL unless compliance under §91.207(b) is maintained through the use of the revised FEL.

(b) The request to amend the engine manufacturer's existing certificate of conformity must include the following information:

(1) A full description of the engine to be added or the change(s) to be made in production;

(2) The manufacturer's proposed test engine selection(s); and

(3) Engineering evaluations or reasons why the original test engine or FEL is or is not still appropriate.

(c) The Administrator may require the engine manufacturer to perform tests on an engine representing the engine to be added or changed.

(d) Decision by Administrator.

(1) Based on the submitted request and data derived from such testing as the Administrator may require or conduct, the Administrator must determine whether the proposed addition or change would still be covered by the certificate of conformity then in effect.

(2) If the Administrator determines that the new or changed engine(s) meets the requirements of this subpart and the Act, the appropriate certificate of conformity will be amended.

(3) If the Administrator determines that the new or changed engines would not be covered by the certificate of conformity, the Administrator must provide a written explanation to the engine manufacturer of his or her decision not to amend the certificate. The manufacturer may request a hearing on a denial. See §91.125.

(4) If the Administrator determines that the revised FEL meets the requirements of this subpart and the Act, the appropriate certificate of conformity will be amended to reflect the revised FEL. The certificate of conformity is revised conditional upon compliance under §91.207(b).

(e)(1) Alternatively, an engine manufacturer may make changes in or additions to production engines concurrently with requesting to amend the application or certification of conformity as set forth in paragraph (b) of this section, if the manufacturer determines that all affected engines will still meet applicable Family Emission Limits (FELs). The engine manufacturer must supply supporting documentation, test data, and engineering evaluations as appropriate to support its determination.

(2) If, after a review, the Administrator determines additional testing is required, the engine manufacturer must provide required test data within 30 days or cease production of the affected engines.

(3) If the Administrator determines that the affected engines do not meet applicable requirements, the Administrator will notify the engine manufacturer to cease production of the affected engines.

§91.123 Denial, revocation of certificate of conformity.

(a) If, after review of the engine manufacturer's application, request for certification, information obtained from any inspection, and any other information the Administrator may require, the Administrator determines that the test engine or engine family does not meet applicable requirements or the Family Emission Limit (FEL), the Administrator will notify the manufacturer in writing, setting forth the basis for this determination.

(b) Notwithstanding the fact that engines described in the application may comply with all other requirements of this subpart, the Administrator may deny the issuance of or revoke a previously issued certificate of conformity if the Administrator finds any one of the following infractions to be substantial:

(1) The engine manufacturer submits false or incomplete information;

(2) The engine manufacturer denies an EPA enforcement officer or EPA authorized representative the opportunity to conduct authorized inspections;

(3) The engine manufacturer fails to supply requested information or amend its application to include all engines being produced;

(4) The engine manufacturer renders inaccurate any test data which it submits or otherwise circumvents the intent of the Act or this part;

(5) The engine manufacturer denies an EPA enforcement officer or EPA authorized representative reasonable assistance (as defined in §91.505); or

(6) The engine manufacturer fails to initiate, perform or submit required data generated from the production line and in-use testing programs to EPA.

(c) If any manufacturer knowingly commits an infraction specified in paragraph (b)(1), (b)(4), or (b)(6) of this section or knowingly commits any other fraudulent act which results in the issuance of a certificate of conformity, or fails to comply with the conditions specified in §§ 91.203(f), 91.206(d), 91.208(c) or 91.209(g), the Administrator may void such certificate *ab initio*.

(d) When the Administrator denies, revokes, or voids *ab initio* a certificate of conformity, the engine manufacturer will be provided a written determination. The manufacturer may request a hearing on the Administrator's decision.

(e) Any revocation of a certificate of conformity extends no further than to forbid the introduction into commerce of those engines previously covered by the certificate which are still in the possession of the engine manufacturer, except in cases of such fraud or other misconduct that makes the certificate void *ab initio*.

§ 91.124 Request for hearing.

(a) An engine manufacturer may request a hearing on the Administrator's denial or revocation or voiding *ab initio* of a certificate of conformity.

(b) The engine manufacturer's request must be filed within 30 days of the Administrator's decision, be in writing, and set forth the manufacturer's objections to the Administrator's decision and data to support the objections.

(c) If, after review of the request and supporting data, the Administrator finds that the request raises a substantial and factual issue, the Administrator will grant the engine manufacturer's request for a hearing.

§ 91.125 Hearing procedures.

The hearing procedures set forth in §§ 91.513, 91.514, and 91.515 apply to this subpart.

§ 91.126 Right of entry and access.

Any engine manufacturer who has applied for certification of a new engine or engine family subject to certification testing under this subpart must admit or cause to be admitted to any applicable facilities during operating hours any EPA enforcement officer or EPA authorized representative as provided in § 91.505.

Subpart C—Averaging, Banking, and Trading Provisions

§ 91.201 Applicability.

The requirements of this subpart C are applicable to all marine spark-ignition engines subject to the provisions of subpart A of this part 91.

§ 91.202 Definitions.

The definitions in subpart A of this part apply to this subpart. The following definitions also apply to this subpart:

Averaging for marine SI engines means the exchange of emission credits among engine families within a given manufacturer's product line.

Banking means the retention of marine SI engine emission credits by the manufacturer generating the emission credits for use in future model year averaging or trading as permitted by these regulations.

Eligible sales means marine SI engines sold for purposes of being used in the United States and include any engine introduced into commerce in the U.S. to be sold for use in the U.S.

Emission credits represent the amount of emission reduction or exceedance, by a marine SI engine family, below or above the applicable emission standard, respectively. Emission reductions below the standard are considered as ''positive credits,'' while emission exceedances above the standard are considered as ''negative credits.'' In addition, ''projected credits'' refer to emission credits based on the projected applicable production/sales volume of the engine family. ''Reserved credits'' are emission credits generated within a model year waiting to be reported to EPA at the end of the model year. ''Actual credits'' refer to emission

credits based on actual applicable production/sales volume as contained in the end-of-year reports submitted to EPA. Some or all of these credits may be revoked if EPA review of the end-of-year reports or any subsequent audit action(s) uncovers problems or errors.

Point of first retail sale means the point at which the engine is first sold directly to an end user. Generally, this point is the retail boat or engine dealer. If the engine is sold first to a boat or vessel manufacturer for installation in a boat or vessel, the boat or vessel manufacturer may be the point of first retail sale if the boat or vessel manufacturer can determine if the engine is or is not exported once they have sold the boat or vessel. If the boat or vessel manufacturer cannot determine if the engine is or is not exported once they have sold the boat or vessel, the engine is presumed to not be exported, unless the engine manufacturer can demonstrate otherwise. Engine manufacturers must include engines in their average if the engine is exported and subsequently imported into the United States installed in a boat or vessel and introduced into United States commerce.

Trading means the exchange of marine engine emission credits between manufacturers.

§ 91.203 General provisions.

(a) The certification averaging, banking, and trading provisions for hydrocarbon plus oxides of nitrogen emissions from eligible marine SI engines are described in this subpart.

(b) A marine SI engine family must use the averaging provisions and may use the banking and trading provisions for hydrocarbon plus oxides of nitrogen emissions if it is subject to regulation under subpart B of this part with certain exceptions specified in paragraph (c) of this section.

(c) Manufacturers of marine SI engines may not use the banking and trading provisions for new marine SI engines:

(1) Which are exported, or

(2) Which are subject to state engine emission standards unless the manufacturer demonstrates to the Administrator that inclusion of these engines in banking and trading is appropriate.

(d) A manufacturer may certify marine SI engine families at Family Emission Limits (FELs) above or below the applicable emission standard, provided the summation of the manufacturer's projected balance of all credit transactions in a given model year is greater than or equal to zero, as determined under § 91.207.

(1) A manufacturer of an engine family with an FEL exceeding the applicable emission standard must obtain positive emission credits sufficient to address the associated credit shortfall via averaging, banking, or trading.

(2) An engine family with an FEL below the applicable emission standard may generate positive emission credits for averaging, banking, or trading, or a combination thereof. Emission credits may not be used to offset an engine family's emissions that exceed its applicable FEL. Credits may not be used to remedy nonconformity determined by a production line testing, a Selective Enforcement Audit (SEA) or by recall (in-use) testing. However, in the case of a manufacturer production line testing or SEA failure, credits may be used to allow subsequent production of engines for the family in question if the manufacturer elects to recertify to a higher FEL. In the case of production line testing a manufacturer may revise the FEL based upon production line testing results obtained under subpart F and upon Administrator approval pursuant to § 91.122(d).

(e) Credits generated in a given model year may be used in the following three model years. Credits not used by the end of the third model year after being generated are forfeited. Credits generated in one model year may not be used for prior model years, unless allowed under § 91.207.

(f) Manufacturers must demonstrate compliance under the averaging, banking, and trading provisions for a particular model year by 270 days after the model year. An engine family generating negative credits for which the manufacturer does not obtain or generate an adequate number of positive credits from the same or previous model years will violate the conditions of the certificate of conformity. The

certificate of conformity may be voided *ab initio* pursuant to § 91.123 for this engine family.

§ 91.204 Averaging.

(a) Negative credits from engine families with FELs above the applicable emission standard must be offset by positive credits from engine families below the applicable emission standard, as allowed under the provisions of this subpart. Averaging of credits in this manner is used to determine compliance under § 91.207(b).

(b) For model years through 2000, outboard credits may not be summed with personal watercraft credits, or vice versa, for purposes of compliance under § 91.207, except manufacturers may, at their discretion, include personal watercraft credits with outboard credits upon demonstration to the satisfaction of the Administrator that the personal watercraft engine is installed in a hybrid vessel that is smaller than a typical sterndrive or inboard vessel and larger than a typical personal watercraft. For model year 2001 and later, manufacturers must sum credits generated from outboard and personal watercraft to determine compliance under § 91.207.

(c) Credits used in averaging may be obtained from credits generated by another engine family as allowed under § 91.204(b), in the same model year, credits banked in the three previous model years, or credits obtained through trading.

§ 91.205 Banking.

(a) A manufacturer of a marine SI engine family with an FEL below the applicable emission standard for a given model year may bank credits in that model year for use in averaging and trading in the following three model years. Negative credits must be banked according to the requirements under § 91.207(c). Positive credits not used within the three model years after they are banked are forfeited.

(1) Early banking. (i) For outboard engines in model year (MY) 1997, a manufacturer may bank positive emission credits if the following conditions are met: the manufacturer certifies their entire marine outboard engine product line for MY 1997 under the emission standards applicable to MY 1998, the manufacturer demonstrates compliance with the corporate average standard under § 91.207(b), and the sum of positive and negative credits under § 91.207 generates positive emission credits, when the following formula is used for purposes of the applicable standard in § 91.207(a). The number of credits that may be banked under this paragraph is the number of positive emission credits generated under the provisions of the preceding sentence. Marine engines certified under the provisions of this paragraph are subject to all of the requirements of this part.

HYDROCARBON PLUS OXIDES OF NITROGEN EXHAUST EMISSION STANDARDS

[Grams per kilowatt-hour]

Model year	P<4.3 kW HC+NO_X Emission standard by model year	P>4.3 kW HC+NO_X emission standard by model year
1997 ...	276	$(0.959 \times (151 + 557/P^{0.9})+1.22)$

(ii) For personal watercraft engines in model year 1998, a manufacturer may bank positive emission credits if the following conditions are met: The manufacturer certifies their entire marine personal watercraft engine product line for MY 1998 under the emission standards applicable to 1998 model year outboard engine emission standards, the manufacturer demonstrates compliance with the corporate average standard under § 91.207(b), and the sum of positive and negative credits under § 91.207 generates positive emission credits, when the following formula is used for purposes of the applicable standard § 91.207(a). The number of credits that may be banked under this paragraph is the number of positive emission credits generated under the provisions of the preceding sentence. Marine engines certified under the provisions of this paragraph are subject to all of the requirements of this part.

HYDROCARBON PLUS OXIDES OF NITROGEN EXHAUST EMISSION STANDARDS

[Grams per kilowatt-hour]

Model year	P<4.3 kW $HC+NO_X$ emission standard by model year	P> 4.3 kW $HC+NO_X$ emission standard by model year
1998 ...	276	$(0.959 \times (151 + 557/P^{0.9})) + 1.22)$

(iii) For personal watercraft in model year 1997, a manufacturer may bank positive emission credits if the following conditions are met: the manufacturer certifies their entire marine personal watercraft engine product line for MY 1997 under the emission standards specified in the formula below for PWC, the manufacturer demonstrates compliance with the corporate average standard under § 91.207(b), and the sum of positive and negative credits under § 91.207 generates positive emission credits, when the following formula is used for purposes of the applicable standard in § 91.207(a). The number of credits that may be banked under this paragraph is the number of positive emission credits generated under the provisions of the preceding sentence. Marine engines certified under the provisions of this paragraph are subject to all of the requirements of this part.

HYDROCARBON PLUS OXIDES OF NITROGEN EXHAUST EMISSION STANDARDS

[Grams per kilowatt-hour]

Model year	P<4.3 kW $HC+NO_X$ emission standard by model year	P> 4.3 kW $HC+NO_X$ emission standard by model year
1997 ...	276	$(0.959 \times (151 + 557/P^{0.9}) + 1.22)$

(b) A manufacturer may bank actual credits only after the end of the model year and after EPA has reviewed the manufacturer's end-of-year reports. During the model year and before submittal of the end-of-year report, credits originally designated in the certification process for banking will be considered reserved and may be redesignated for trading or averaging in the end-of-year report and final report.

(c) Credits declared for banking from the previous model year that have not been reviewed by EPA may be used in averaging or trading transactions. However, such credits may be revoked at a later time following EPA review of the end-of-year report or any subsequent audit actions.

§ 91.206 Trading.

(a) A marine SI engine manufacturer may exchange emission credits with other marine SI engine manufacturers in trading. These credits must be used in the same averaging set as generated.

(b) Credits for trading can be obtained from credits banked in the three previous model years or credits generated during the model year of the trading transaction. Traded credits expire if they are not used in averaging within three model years following the model year in which they were generated.

(c) Traded credits can be used for averaging, banking, or further trading transactions.

(d) In the event of a negative credit balance resulting from a transaction, both the buyer and the seller are liable, except in cases involving fraud. Certificates of all engine families participating in a negative trade may be voided *ab initio* pursuant to § 91.123.

§ 91.207 Credit calculation and manufacturer compliance with emission standards.

(a) For each engine family, certification emission credits (positive or negative) are to be calculated according to the following equation and rounded, in accordance with ASTM E29–93a, to the nearest gram. ASTM E29–93a has been incorporated by reference. See § 91.6. Consistent units are to be used throughout the equation. The following equation is used to determine hydrocarbon plus oxides of nitrogen credit status for an engine family, whether generating positive credits or negative credits:

$$\sum_{t=1}^{\text{max actual life}} \frac{S(t) \times \text{sales} \times (\text{std} - \text{fel}) \times \text{Power} \times 0.207 \times \mu_{\text{use}}}{1.03^{t}}$$

Where:

sales = the number of eligible sales tracked to the point of first retail sale for the given engine family during the model year. Annual production projections are used to project credit availability for initial certification. Actual sales volume is used in determining actual credits for end of-year compliance determination.

t = time in model years

Power = the average power of an engine family in kW (sales weighted). The power of each configuration is the rated output in kilowatts as determined by SAE J1228. This procedure has been incorporated by reference. See § 91.6.

max actual life = maximum actual life specific to the power rating and the application; max actual life = $2\mu_{life}$

μ_{life} = average actual life in years, specific to the power rating and the application as given below.

Engine type	(μ_{life})
Outboard	$41.27 \times \left(\frac{\text{Power}}{0.746}\right)^{-0.204}$
Personal Watercraft	10

Power = as defined above.

μ_{use} = mean use in hours per year. For outboard engines,

μ_{use} = 34.8 hrs /yr. For personal watercraft, μ_{use} = 77.3 hrs/yr;

S(t) = cumulative fraction survived at time t;

$S(t) = \exp -(0.906 \times t/\mu_{life})^4$

STD = the current and applicable marine SI engine emission standard in grams per kilowatt hour as determined in § 91.104.

FEL = the family emission limit for the engine family in grams per kilowatt hour.

(b) Manufacturer compliance with the corporate average emission standard is determined on a corporate average basis at the end of each model year. A manufacturer is in compliance when the sum of positive and negative emission credits it holds is greater than or equal to zero, except as allowed under paragraph (c) of this section.

(c)(1) Outboard Engines

(i) For model year 1998, a manufacturer is in compliance when the sum of positive credits and negative emission credits it holds is greater than or equal to zero, including

(A) Credits generated in MY 1998 exceed 70% of the negative credits generated in MY 1998. The remaining negative credits (up to 30% of the total negative credits) must be banked.

(ii) For model year 1999, a manufacturer is in compliance when the positive credits generated in MY 1999 exceed the sum of 80% of the negative credits generated in MY 1999 and the negative credits banked in 1998. The remaining negative credits (up to 20% of the total negative credits) must be banked.

(iii) For model year 2000, a manufacturer is in compliance when the sum of positive and negative emission credits it holds is greater than or equal to zero, including

(A) The negative credits banked in MY 1998 and MY 1999 and

(B) Any adjustments to credits based on adjustments to FELs resulting from requirements in § 91.118(h)(1)(i). Manufacturers do not have to recalculate compliance for model years 1998 and 1999.

(2) Personal watercraft engines. (i) For model year 1999, a manufacturer is in compliance when the positive credits generated in MY 1999 exceed 50% of the negative credits generated in MY 1999. The remaining negative credits (up to 50% of the total negative credits) must be banked.

(ii) For model year 2000, a manufacturer is in compliance when the sum of positive and negative emission credits it holds is greater than or equal to zero, including

(A) The negative credits banked in 1999 and

(B) Any adjustments to credits based on adjustments to FELs resulting from requirements in § 91.118(h)(1)(i). Manufacturers do not have to recalculate compliance for model year 1999.

(d) When a manufacturer is not in compliance, the manufacturer will be in violation of these regulations and EPA may void *ab initio* the certificates of engine families for which the manufacturer has not obtained sufficient positive emission credits pursuant to §91.123.

(e) Notwithstanding other provisions of this part, for model years beginning with model year 2000, a manufacturer having a negative credit balance during one period of up to four consecutive model years will not be considered to be in noncompliance in a model year up through and including model year 2009 where:

(1) The manufacturer has a total annual production of engines subject to regulation under this part of 1000 or less; and

(2) The manufacturer has not had a negative credit balance other than in three immediately preceding model years, except as permitted under paragraph (c) of this section; and

(3) The FEL(s) of the family or families produced by the manufacturer are no higher than those of the corresponding family or families in the previous model year, except as allowed by the Administrator; and

(4) The manufacturer submits a plan acceptable to the Administrator for coming into compliance with future model year standards including projected dates for the introduction or increased sales of engine families having FEL(s) below standard and projected dates for discontinuing or reducing sales of engines having FEL(s) above standard; and

(5)(i) The manufacturer has set its FEL using emission testing as prescribed in subpart E of this part; or

(ii) The manufacturer has set its FEL based on the equation and provisions of §91.118(h)(1)(i) and the manufacturer has submitted appropriate test data and revised its FEL(s) and recalculated its credits pursuant to the provisions of §91.118(h)(1); or

(iii) The manufacturer has set its FEL using good engineering judgement, pursuant to the provisions of §91.118(h)(1)(ii) and (h)(2).

[64 FR 15239, Mar. 30, 1999, as amended at 65 FR 24314, Apr. 25, 2000; 70 FR 40451, July 13, 2005]

§91.208 Certification.

(a) In the application for certification a manufacturer must:

(1) Submit a statement that the engines for which certification is requested will not, to the best of the manufacturer's belief, cause the manufacturer to be in noncompliance under §91.207(b) when all credits are calculated for all the manufacturer's engine families.

(2) Declare an FEL for each engine family for HC plus NO_X. The FEL must have the same number of significant digits as the emission standard.

(3) Indicate the projected number of credits generated/needed for this family; the projected applicable production/sales volume, by quarter; and the values required to calculate credits as given in §91.207.

(4) Submit calculations in accordance with §91.207 of projected emission credits (positive or negative) based on quarterly production projections for each family.

(5)(i) If the engine family is projected to have negative emission credits, state specifically the source (manufacturer/engine family or reserved) of the credits necessary to offset the credit deficit according to quarterly projected production.

(ii) If the engine family is projected to generate credits, state specifically (manufacturer/engine family or reserved) where the quarterly projected credits will be applied.

(b) All certificates issued are conditional upon manufacturer compliance with the provisions of this subpart both during and after the model year of production.

(c) Failure to comply with all provisions of this subpart will be considered to be a failure to satisfy the conditions upon which the certificate was issued, and the certificate may be deemed void *ab initio* pursuant to §91.123.

(d) The manufacturer bears the burden of establishing to the satisfaction of the Administrator that the conditions upon which the certificate was issued were satisfied or waived.

(e) Projected credits based on information supplied in the certification application may be used to obtain a certificate of conformity. However, any such credits may be revoked based on

review of end-of-year reports, follow-up audits, and any other verification steps deemed appropriate by the Administrator.

§ 91.209 Maintenance of records.

(a) The manufacturer must establish, maintain, and retain the following adequately organized and indexed records for each engine produced:

(1) EPA engine family,

(2) Engine identification number,

(3) Engine model year and build date,

(4) Power rating,

(5) Purchaser and destination, and

(6) Assembly plant.

(b) The manufacturer must establish, maintain, and retain the following adequately organized and indexed records for each engine family:

(1) EPA engine family identification code,

(2) Family Emission Limit (FEL) or FELs where FEL changes have been implemented during the model year,

(3) Power rating for each configuration tested,

(4) Projected sales volume for the model year, and

(5) Actual sales volume for the model year for each FEL where FEL changes have been implemented during the model year.

(c) Any manufacturer producing an engine family participating in trading reserved credits must maintain the following records on a quarterly basis for each such engine family:

(1) The engine family,

(2) The actual quarterly and cumulative applicable production/sales volume,

(3) The values required to calculate credits as given in § 91.207,

(4) The resulting type and number of credits generated/required,

(5) How and where credit surpluses are dispersed, and

(6) How and through what means credit deficits are met.

(d) The manufacturer must retain all records required to be maintained under this section for a period of eight years from the due date for the end-of-model year report. Records may be retained as hard copy or reduced to microfilm, ADP diskettes, and so forth, depending on the manufacturer's record retention procedure; provided, that in every case all information contained in the hard copy is retained.

(e) Nothing in this section limits the Administrator's discretion in requiring the manufacturer to retain additional records or submit information not specifically required by this section.

(f) Pursuant to a request made by the Administrator, the manufacturer must submit to the Administrator the information that the manufacturer is required to retain.

(g) EPA may void *ab initio* a certificate of conformity for an engine family for which the manufacturer fails to retain the records required in this section or to provide such information to the Administrator upon request pursuant to § 91.123.

§ 91.210 End-of-year and final reports.

(a) End-of-year and final reports must indicate the engine family, the actual sales volume, the values required to calculate credits as given in § 91.207, and the number of credits generated/required. Manufacturers must also submit how and where credit surpluses were dispersed (or are to be banked) and/or how and through what means credit deficits were met. Copies of contracts related to credit trading must be included or supplied by the broker, if applicable. The report must include a calculation of credit balances to show that the credit summation is equal to or greater than zero.

(b) The sales volume for end-of-year and final reports must be based on the location of the point of first retail sale (for example, retail customer or dealer) also called the final product purchase location.

(c)(1) End-of-year reports must be submitted within 90 days of the end of the model year to: Manager, Engine Compliance Programs Group (6403–J), US Environmental Protection Agency, 1200 Pennsylvania Ave., NW., Washington, DC 20460.

(2) Final reports must be submitted within 270 days of the end of the model year to: Manager, Engine Compliance Programs Group (6403–J), U.S. Environmental Protection Agency, 1200 Pennsylvania Ave., NW., Washington, DC 20460.

(d) Failure by a manufacturer to submit any end-of-year or final reports in

the specified time for all engines is a violation of §91.1103(a)(2) and section 213(d) of the Clean Air Act for each engine.

(e) A manufacturer generating credits for banking only who fails to submit end-of-year reports in the applicable specified time period (90 days after the end of the model year) may not use the credits until such reports are received and reviewed by EPA. Use of projected credits pending EPA review is not permitted in these circumstances.

(f) Errors discovered by EPA or the manufacturer in the end-of-year report, including errors in credit calculation, may be corrected in the final report up to 270 days from the end of the model year.

(g) If EPA or the manufacturer determines that a reporting error occurred on an end-of-year or final report previously submitted to EPA under this section, the manufacturer's credits and credit calculations must be recalculated. Erroneous positive credits will be void except as provided in paragraph (h) of this section. Erroneous negative credit balances may be adjusted by EPA.

(h) If within 270 days of the end of the model year, EPA review determines a reporting error in the manufacturer's favor (that is, resulting in an increased credit balance) or if the manufacturer discovers such an error within 270 days of the end of the model year, EPA shall restore the credits for use by the manufacturer.

§91.211 Notice of opportunity for hearing.

Any voiding of the certificate under §§91.203(f), 91.206(d), 91.207(d), 91.208(c), or §91.209(g) shall be made only after the manufacturer concerned is offered an opportunity for a hearing conducted in accordance with §§91.512, 91.513 and 91.514 and, if a manufacturer requests such a hearing, will be made only after an initial decision by the Presiding Officer.

Subpart D—Emission Test Equipment Provisions

§91.301 Scope; applicability.

(a) This subpart describes the equipment required in order to perform exhaust emission tests on new marine gasoline-fueled spark-ignition propulsion engines subject to the provisions of subpart A of this part 91.

(b) Exhaust gases are sampled while the test engine is operated using a steady state test cycle on an engine dynamometer. Exhaust gas sampling may be performed using either the raw gas sampling method or the constant volume sampling (CVS) method. The exhaust gases receive specific component analysis determining concentration of pollutant, exhaust volume, the fuel flow, and the power output during each mode. Emissions are reported on a gram per brake-kilowatt hour (g/kW-hr). See subpart E of this part for a complete description of the test procedure.

(c) Additional information about system design, calibration methodologies, and so forth, for raw gas sampling can be found in 40 CFR part 1065. Examples for system design, calibration methodologies, and so forth, for dilute sampling can be found in 40 CFR part 1065.

[61 FR 52102, Oct. 4, 1996, as amended at 70 FR 40451, July 13, 2005]

§91.302 Definitions.

The definitions in §91.3 apply to this subpart.

§91.303 Acronyms and abbreviations.

(a) The acronyms and abbreviations in §91.5 apply to this subpart.

(b) The symbols in Table 1 in appendix A of this subpart apply to this subpart.

§91.304 Test equipment overview.

(a) All engines subject to this subpart are tested for exhaust emissions. Engines are operated on dynamometers meeting the specification given in §91.305.

(b) The exhaust is tested for gaseous emissions using either a constant volume sampling (CVS) system as described in §91.414, or using the raw gas sampling system as described in

§ 91.421. Both systems require analyzers (see paragraph (c) of this section) specific to the pollutant being measured.

(c) Analyzers used are a non-dispersive infrared detector (NDIR) absorption type for carbon monoxide and carbon dioxide analysis; paramagnetic detector (PMD), zirconia (ZRDO), or electrochemical type (ECS) for oxygen analysis; a flame ionization detector (FID) or heated flame ionization detector (HFID) type for hydrocarbon analysis; and a chemiluminescent detector (CLD) or heated chemiluminescent detector (HCLD) for oxides of nitrogen analysis.

§ 91.305 Dynamometer specifications and calibration accuracy.

(a) *Dynamometer specifications.* (1) The dynamometer test stand and other instruments for measurement of engine speed and torque must meet the accuracy requirements shown in Table 2 in appendix A to this subpart. The dynamometer must be capable of performing the test cycle described in § 91.410.

(b) *Dynamometer calibration accuracy.* (1) The dynamometer test stand and other instruments for measurement of engine torque and speed must meet the calibration frequency shown in Table 2 in appendix to this subpart.

(2) A minimum of three calibration weights for each range used is required. The weights must be equally spaced and traceable to within 0.5 percent of National Institute of Standards and Testing (NIST) weights. Laboratories located in foreign countries may certify calibration weights to local government bureau standards.

§ 91.306 Dynamometer torque cell calibration.

(a)(1) Any lever arm used to convert a weight or a force through a distance into a torque must be used in a horizontal position for horizontal shaft dynamometers (±five degrees). For vertical shaft dynamometers, a pulley system may be used to convert the dynamometer's horizontal loading into the vertical plane.

(2) Calculate the indicated torque (IT) for each calibration weight to be used by:

IT=Moment Arm (meters)×Calibration Weight (Newtons)

(3) Attach each calibration weight specified in § 91.305(b)(2) to the moment arm at the calibration distance determined in paragraph (a)(2) of this section. Record the power measurement equipment response (N-m) to each weight.

(4) Compare the torque value measured to the calculated torque.

(5) The measured torque must be within two percent of the calculated torque.

(6) If the measured torque is not within two percent of the calculated torque, adjust or repair the system. Repeat steps in paragraphs (a)(1) through (a)(6) of this section with the adjusted or repaired system.

(b) Option. A master load-cell or transfer standard may be used to verify the torque measurement system.

(1) The master load-cell and read out system must be calibrated with weights specified in § 91.305(b)(2).

(2) Attach the master load-cell and loading system.

(3) Load the dynamometer to a minimum of three equally spaced torque values as indicated by the master load-cell for each in-use range used.

(4) The in-use torque measurement must be within two percent of the torque measured by the master system for each load used.

(5) If the in-use torque is not within two percent of the master torque, adjust or repair the system. Repeat steps in paragraphs (b)(2) through (b)(4) of this section with the adjusted or repaired system.

(c) Calibrated resistors may not be used for dynamometer torque transducer calibration, but may be used to span the transducer prior to engine testing.

(d) Other engine dynamometer system calibrations such as speed are performed as specified by the dynamometer manufacturer or as dictated by good engineering practice.

§ 91.307 Engine cooling system.

An engine cooling system is required with sufficient capacity to maintain the engine at normal operating temperatures as prescribed by the engine manufacturer. Auxiliary fan(s) may be

used to maintain sufficient engine cooling during dynamometer operation.

§91.308 Lubricating oil and test fuel.

(a) *Lubricating oil*. (1) Use the engine lubricating oil which meets the marine engine manufacturer's requirements for a particular engine and intended usage. Record the specifications of the lubricating oil used for the test.

(2) For two-stroke engines, the fuel/oil mixture ratio must be that which is recommended by the manufacturer. If the flow rate of the oil in the engine is greater than two percent of the fuel flow rate, then the oil supplied to the engine must be added to the fuel flow in the emission calculations described in §91.419 and §91.426. Good engineering judgment may be used to estimate oil flow when oil injection is used.

(b) *Test fuels—certification*. The manufacturer must use gasoline having the specifications or substantially equivalent specifications approved by the Administrator, as specified in Table 3 in appendix A of this subpart for exhaust emission testing of gasoline fueled engines. The specification range of the fuel to be used under this paragraph must be reported in accordance with §91.109(d).

(c) *Test fuels—service accumulation*. (1) Unleaded gasoline representative of commercial gasoline which will be generally available through retail outlets must be used in service accumulation for gasoline-fueled marine engines. As an alternative, the certification test fuels specified under paragraph (b) of this section for engine service accumulation. Leaded fuel may not be used during service accumulation.

(2) The octane rating of the gasoline used may not be higher than 4.0 research octane numbers above the minimum recommended by the manufacturer and have a minimum sensitivity of 7.5 octane numbers, where sensitivity is defined as research octane number minus motor octane number.

(d) Other fuels may be used for testing provided:

(1) They are commercially viable,

(2) Information, acceptable to the Administrator, is provided to show that only the designated fuel would be used in customer service,

(3) Use of a fuel listed under paragraph (b) of this section would have a detrimental effect on emissions or durability; and

(4) The Administrator provides written approval of the fuel specifications prior to the start of testing.

§91.309 Engine intake air temperature measurement.

(a) Engine intake air temperature measurement must be made within 100 cm of the air-intake of the engine. The measurement location must be either in the supply system or in the air stream entering the engine.

(b) The temperature measurements must be accurate to within ±2 °C.

§91.310 Engine intake air humidity measurement.

This section refers to engines which are supplied with intake air other than the ambient air in the test cell (i.e., air which has been pumbed directly to the engine air intake system). For engines which use ambient test cell air for the engine intake air, the ambient testcell humidity measurement may be used.

(a) *Humidity conditioned air supply*. Air that has had its absolute humidity altered is considered humidity-conditioned air. For this type of intake air supply, the humidity measurements must be made within the intake air supply system, and after the humidity conditioning has taken place.

(b) *Unconditioned air supply*. Humidity measurements in unconditioned intake air supply must be made in the intake air stream entering the engine. Alternatively, the humidity measurements can be measured within the intake air stream entering the supply system.

§91.311 Test conditions.

(a) *General requirements*. (1) Ambient temperature levels encountered by the test engine throughout the test sequence may not be less than 20 °C nor more than 30 °C.

(2) Calculate all volumes and volumetric flow rates at standard conditions for temperature and pressure. Use these conditions consistently throughout all calculations. Standard conditions for temperature and pressure are 25 °C and 101.3 kPa.

(b) *Engine test conditions*. Measure the absolute temperature (designated as T and expressed in Kelvin) of the engine air at the inlet to the engine and the dry atmospheric pressure (designated as p_s and expressed in kPa. Determine the parameter *f* according to the following provisions:

(1) Naturally aspirated and mechanically supercharged engines:

$$f = \frac{99}{p_s} \times \left(\frac{T}{298}\right)^{0.7}$$

(2) Turbocharged engine with or without cooling of inlet air:

$$f = \left(\frac{99}{p_s}\right)^{0.7} \times \left(\frac{T}{298}\right)^{1.5}$$

(3) For a test to be recognized as valid, the parameter *f* must be between the limits as shown below:

$$0.96 < f < 1.04$$

§ 91.312 Analytical gases.

(a) The shelf life of a calibration gas may not be exceeded. Record the expiration date stated by the gas supplier for each calibration gas.

(b) *Pure gases*. The required purity of the gases is defined by the contamination limits given in parenthesis. The following gases must be available for operation.

(1) Purified nitrogen, also referred to as ''zero-grade nitrogen'' (Contamination≤1 ppm C, ≤1 ppm CO, ≤400 ppm CO_2, ≤0.1 ppm NO)

(2) Purified oxygen (Purity 99.5 percent vol O_2)

(3) Hydrogen-helium mixture (40±2 percent hydrogen, balance helium) (Contamination≤1 ppm C, ≤400 ppm CO)

(4) Purified synthetic air, also referred to as ''zero gas'' (Contamination≤1 ppm C, ≤1 ppm CO, ≤400 ppm CO_2, ≤0.1 ppm NO) (Oxygen content between 18–21 percent vol.)

(c) *Calibration and span gases*. (1) Calibration gas values are to be derived from NIST ''Standard Reference Materials'' (SRM's) or other local gas standards and are to be single blends as specified in this subsection.

(2) Mixtures of gases having the following chemical compositions must be available:

C_3H_8 and purified synthetic air (dilute measurements); C_3H_8 and purified nitrogen (raw measurements);
CO and purified nitrogen;
NO_X and purified nitrogen (the amount of NO_2 contained in this calibration gas must not exceed five percent of the NO content);
CO_2 and purified nitrogen.

NOTE: For the HFID or FID, the manufacturer may choose to use as a diluent span gas and the calibration gas either purified synthetic air or purified nitrogen. Any mixture of C_3H_8 and purified synthetic air which contains a concentration of propane higher than what a gas supplier considers to be safe may be substituted with a mixture of C_3H_8 and purified nitrogen. However, the manufacturer must be consistent in the choice of diluent (zero air or purified nitrogen) between the calibration and span gases. If a manufacturer chooses to use C_3H_8 and purified nitrogen for the calibration gases, then purified nitrogen must be the diluent for the span gases.

(3) The true concentration of a span gas must be within ±2 percent of the NIST gas standard. The true concentration of a calibration gas must be within ±1 percent of the NIST gas standard. The use of precision blending devices (gas dividers) to obtain the required calibration gas concentrations is acceptable. Give all concentrations of calibration gas on a volume basis (volume percent or volume ppm).

(4) The gas concentrations used for calibration and span may also be obtained by means of a gas divider, diluting with purified N_2 or with purified synthetic air. The accuracy of the mixing device must be such that the concentration of the diluted gases may be determined to within ±2 percent.

(d) Oxygen interference check gases must contain propane with 350 ppmC ±75 ppmC hydrocarbon. Determine the concentration value to calibration gas tolerances by chromatographic analysis of total hydrocarbons plus impurities or by dynamic blending. Use nitrogen as the predominant diluent with the balance oxygen.

(e) Fuel for the hydrocarbon flame ionization detector (HC-FID) must be a blend of 40±2 percent hydrogen with the balance being helium. The mixture

shall contain less than one ppm equivalent carbon response; 98 to 100 percent hydrogen fuel may be used with advance approval of the Administrator.

(f) *Hydrocarbon analyzer burner air.* The concentration of oxygen must be within one mole percent of the oxygen concentration of the burner air used in the latest oxygen interference check (percent O_2 I), see §91.316(d). If the difference in oxygen concentration is greater than one mole percent, then the oxygen interference must be checked and the analyzer adjusted if necessary, to meet the percent O_2 I requirements. The burner air must contain less than two ppmC hydrocarbon.

§91.313 Analyzers required.

(a) *Analyzers.* Analyze measured gases with the following instruments:

(1) *Carbon monoxide (CO) analysis.* (i) The carbon monoxide analyzer must be of the non-dispersive infrared (NDIR) absorption type.

(ii) The use of linearizing circuits is permitted.

(2) *Carbon dioxide (CO_2) analysis.* (i) The carbon dioxide analyzer must be of the non-dispersive infrared (NDIR) absorption type.

(ii) The use of linearizing circuits is permitted.

(3) *Oxygen (O_2) analysis.* Oxygen (O_2) analyzers may be of the paramagnetic (PMD), zirconia (ZRDO) or electrochemical type (ECS).

(4) *Hydrocarbon (HC) analysis.* (i) For Raw Gas Sampling, the hydrocarbon analyzer must be of the heated flame ionization (HFID) type. For constant volume sampling, the hydrocarbon analyzer may be of the flame ionization (FID) type or of the heated flame ionization (HFID) type.

(ii) For the HFID system, if the temperature of the exhaust gas at the sample probe is below 190 °C, the temperature of the valves, pipe work, and so forth, must be controlled so as to maintain a wall temperature of 190 ±11 °C. If the temperature of the exhaust gas at the sample probe is above 190 °C, the temperature of the valves, pipe work, and so forth, must be controlled so as to maintain a wall temperature greater than 180 °C.

(iii) For the HFID analyzer, the detector, oven, and sample-handling components within the oven must be suitable for continuous operation at temperatures to 200 °C. It must by capable of maintaining temperature within ±5.5 °C of the set point.

(iv) Fuel and burner air must conform to the specifications in §91.312.

(v) The percent of oxygen interference must be less than three percent, as specified in §91.316(d).

(5) *Oxides of nitrogen (NO_X) analysis.* (i) This analysis device consists of the following items:

(A) A NO_2 to NO converter. The NO_2 to NO converter efficiency must be at least 90 percent.

(B) An ice bath located after the NO_X converter (optional).

(C) A chemiluminescent detector (CLD) or heated chemiluminescent detector (HCLD).

(ii) The quench interference must be less than three percent as measured in §91.325.

(b) Other gas analyzers yielding equivalent results may be used with advance approval of the Administrator.

(c) The following requirements must be incorporated as indicated in systems used for testing under this subpart.

(1) Carbon monoxide and carbon dioxide measurements must be made on a dry basis (for raw exhaust measurement only). Specific requirements for the means of drying the sample can be found in §91.313(e).

(2) Calibration or span gases for the NO_X measurement system must pass through the NO_2 to NO converter.

(d) The electromagnetic compatibility (EMC) of the equipment must be on a level as to minimize additional errors.

(e) Gas drying. Chemical dryers are not an acceptable method of removing water from the sample. Water removal by condensation is acceptable. If water is removed by condensation, the sample gas temperature or sample dew point must be monitored either within the water trap or downstream and its temperature must not exceed 7 °C. A water trap performing this function is an acceptable method. Means other than condensation may be used only with prior approval from the Administrator.

§ 91.314 Analyzer accuracy and specifications.

(a) *Measurement accuracy—general.* The analyzers must have a measuring range which allows them to measure the concentrations of the exhaust gas sample pollutants with the accuracies shown in Table 2 in appendix A to this subpart.

(1) *Precision.* The precision of the analyzer must be, at worst, ±1 percent of full-scale concentration for each range used. The precision is defined as 2.5 times the standard deviation(s) of 10 repetitive responses to a given calibration or span gas.

(2) *Noise.* The analyzer peak-to-peak response to zero and calibration or span gases over any 10-second period may not exceed two percent of full-scale chart deflection on all ranges used.

(3) *Zero drift.* The analyzer zero-response drift during a one-hour period must be less than two percent of full-scale chart deflection on the lowest range used. The zero-response is defined as the mean response including noise to a zero-gas during a 30-second time interval.

(4) *Span drift.* The analyzer span drift during a one-hour period must be less than two percent of full-scale chart deflection on the lowest range used. The analyzer span is defined as the difference between the span-response and the zero-response. The span-response is defined as the mean response including noise to a span gas during a 30-second time interval.

(b) *Operating procedure for analyzers and sampling system.* Follow the start-up and operating instructions of the instrument manufacturer. Adhere to the minimum requirements given in § 91.316 to § 91.325 and § 91.409.

(c) *Emission measurement accuracy—bag sampling.* (1) Good engineering practice dictates that exhaust emission sample analyzer readings below 15 percent of full scale chart deflection should generally not be used.

(2) Some high resolution read-out systems, such as computers, data loggers, and so forth, can provide sufficient accuracy and resolution below 15 percent of full scale. Such systems may be used provided that additional calibrations are made to ensure the accuracy of the calibration curves. The following procedure for calibration below 15 percent of full scale may be used:

NOTE: If a gas divider is used, the gas divider must conform to the accuracy requirements as follows: The use of precision blending devices (gas dividers) to obtain the required calibration gas concentrations is acceptable, provided that the blended gases are accurate to within ±1.5 percent of NIST gas standards or other gas standards which have been approved by the Administrator. This accuracy implies that primary gases used for blending must be ''named'' to an accuracy of at least ±1 percent, traceable to NIST or other approved gas standards.

(i) Span the full analyzer range using a top range calibration gas. The span gases must be accurate to within ±2 percent of NIST gas standards or other gas standards which have been approved by the Administrator.

(ii) Generate a calibration curve according to, and meeting the requirements of the sections describing analyzer calibrations which are found in §§ 91.316, 91.317, 91.318, and 91.320 of this chapter.

(iii) Select a calibration gas (a span gas may be used for calibrating the CO_2 analyzer) with a concentration between the two lowest non-zero gas divider increments. This gas must be ''named'' to an accuracy of ±2 percent of NIST gas standards, or other standards approved by the Administrator.

(iv) Using the calibration curve fitted to the points generated in paragraphs (c)(2) (i) and (ii) of this section, check the concentration of the gas selected in paragraph (c)(2)(iii) of this section. The concentration derived from the curve must be within ±2.3 percent (±2.8 percent for CO_2 span gas) of the gas' original named concentration.

(v) Provided the requirements of paragraph (c)(2)(iv) of this section are met, use the gas divider with the gas selected in paragraph (c)(2)(iii) of this section and determine the remainder of the calibration points. Fit a calibration curve per §§ 91.316, 91.317, 91.318, and 91.320 of this chapter for the entire analyzer range.

(d) *Emission measurement accuracy—continuous sampling.* Analyzers used for continuous analysis must be operated such that the measured concentration falls between 15 and 100 percent of full scale chart deflection. Exceptions to these limits are:

(1) The analyzer's response may be less than 15 percent or more than 100 percent of full scale if automatic range change circuitry is used and the limits for range changes are between 15 and 100 percent of full scale chart deflection;

(2) The analyzer's response may be less than 15 percent of full scale if:

(i) Alternative in paragraph (c)(2) of this section is used to ensure that the accuracy of the calibration curve is maintained below 15 percent; or

(ii) The full scale value of the range is 155 ppmC or less; or

(iii) The emissions from the engine are erratic and the integrated chart deflection value for the cycle is greater than 15 percent of full scale; or

(iv) The contribution of all data read below the 15 percent level is less than 10 percent by mass of the final test results.

§91.315 Analyzer initial calibration.

(a) *Warming-up time*. Follow the warm-up time according to the recommendations of the manufacturer. If not specified, a minimum of two hours should be allowed for warming up the analyzers.

(b) *NDIR and HFID analyzer*. Tune and maintain the NDIR analyzer per the instrument manufacturer recommendations. The combustion flame of the HFID analyzer must be optimized in order to meet the specifications in §91.316(b).

(c) *Zero setting and calibration*. Using purified synthetic air (or nitrogen), set the CO, CO_2, NO_X and HC analyzers at zero. Connect the appropriate calibrating gases to the analyzers and record the values. The same gas flow rates shall be used as when sampling exhaust.

(d) *Rechecking of zero setting*. Recheck the zero setting and, if necessary, repeat the procedure described in paragraph (c) of this section.

§91.316 Hydrocarbon analyzer calibration.

(a) Calibrate the FID and HFID hydrocarbon analyzer as described in this section. Operate the HFID to a set point ±5.5 °C between 185 and 197 °C.

(b) Initial and periodic optimization of detector response. Prior to introduction into service and at least annually thereafter, adjust the FID and HFID hydrocarbon analyzer for optimum hydrocarbon response as specified by this paragraph. Alternative methods yielding equivalent results may be used, if approved in advance by the Administrator.

(1) Follow good engineering practices for initial instrument start-up and basic operating adjustment using the appropriate fuel (see §91.312) and purified synthetic air or zero-grade nitrogen.

(2) One of the following procedures is required for FID or HFID optimization:

(i) The procedure outlined in Society of Automotive Engineers (SAE) paper No. 770141, ''Optimization of Flame Ionization Detector for Determination of Hydrocarbons in Diluted Automobile Exhaust''; author, Glenn D. Reschke. This procedure has been incorporated by reference. See §91.6.

(ii) The HFID optimization procedures outlined in 40 CFR part 1065, subpart D.

(iii) Alternative procedures may be used if approved in advance by the Administrator.

(3) After the optimum flow rates have been determined, they are recorded for future reference.

(c) Initial and periodic calibration. Prior to introduction into service and monthly thereafter, or within one month prior to the certification test, calibrate the FID or HFID hydrocarbon analyzer on all normally used instrument ranges, using the steps in this paragraph. Use the same flow rate and pressures as when analyzing samples. Introduce calibration gases directly at the analyzer. An optional method for dilute sampling described in 40 CFR part 1065, subpart F, may be used.

(1) Adjust analyzer to optimize performance.

(2) Zero the hydrocarbon analyzer with purified synthetic air or zero-grade nitrogen.

(3) Calibrate on each used operating range with calibration gases having nominal concentrations between 10 and 90 percent of that range. A minimum of six evenly spaced points covering at least 80 percent of the 10 to 90 percent range (64 percent) is required (see following table).

Example calibration points (percent)	Acceptable for calibration?
20, 30, 40, 50, 60, 70	No, range covered is 50? percent, not 64 percent.
20, 30, 40, 50, 60, 70, 80, 90	Yes.
10, 25, 40, 55, 70, 85	Yes
10, 30, 50, 70, 90	No, though equally spaced and entire range covered, a minimum of six points is needed

(4) For each range calibrated, if the deviation from a least-squares best-fit straight line is two percent or less of the value at each data point, calculate concentration values by use of a single calibration factor for that range. If the deviation exceeds two percent at any point, use the best-fit non-linear equation which represents the data to within two percent of each test point to determine concentration.

(d) Oxygen interference optimization. Choose a range where the oxygen interference check gases will fall in the upper 50 percent. Conduct the test, as outlined in this paragraph, with the oven temperature set as required by the instrument manufacturer. Oxygen interference check gas specifications are found in § 91.312(d).

(1) Zero the analyzer.

(2) Span the analyzer with the 21 percent oxygen blend.

(3) Recheck zero response. If it has changed more than 0.5 percent of full scale repeat paragraphs (d)(1) and (d)(2) of this section to correct the problem.

(4) Introduce the 5 percent and 10 percent oxygen interference check gases.

(5) Recheck the zero response. If it has changed more than ±1 percent of full scale, repeat the test.

(6) Calculate the percent of oxygen interference (designated as percent O_2 I) for each mixture in paragraph (d)(4) of this section according to the following equation:

percent O_2 I = (B − Analyzer response (ppm C))/B × 100

$$\text{analyzer response} = \left(\frac{\text{A}}{\text{\% of fullscale analyzer response due to A}} \times \left(\text{\% of fullscale analyzer response due to B}\right) \right.$$

Where:

A=hydrocarbon concentration (ppmC) of the span gas used in paragraph (d)(2) of this section.

B=hydrocarbon concentration (ppmC) of the oxygen interference check gases used in paragraph (d)(4) of this section.

(7) The percent of oxygen interference (designated as percent O_2 I) must be less than ±three percent for all required oxygen interference check gases prior to testing.

(8) If the oxygen interference is greater than the specifications, incrementally adjust the air flow above and below the manufacturer's specifications, repeating paragraphs (d)(1) through (d)(7) of this section for each flow.

(9) If the oxygen interference is greater than the specification after adjusting the air flow, vary the fuel flow and thereafter the sample flow, repeating paragraphs (d)(1) through (d)(7) of this section for each new setting.

(10) If the oxygen interference is still greater than the specifications, repair or replace the analyzer, FID fuel, or burner air prior to testing. Repeat this section with the repaired or replaced equipment or gases.

[61 FR 52102, Oct. 4, 1996, as amended at 70 FR 40451, July 13, 2005]

§ 91.317 Carbon monoxide analyzer calibration.

(a) Calibrate the NDIR carbon monoxide analyzer described in this section.

(b) Initial and periodic interference check. Prior to its introduction into service and annually thereafter, check the NDIR carbon monoxide analyzer for response to water vapor and CO_2.

(1) Follow good engineering practices for instrument start-up and operation.

Adjust the analyzer to optimize performance on the most sensitive range to be used.

(2) Zero the carbon monoxide analyzer with either purified synthetic air or zero-grade nitrogen.

(3) Bubble a mixture of three percent CO_2 in N_2 through water at room temperature and record analyzer response.

(4) An analyzer response of more than one percent of full scale for ranges above 300 ppm full scale or more than three ppm on ranges below 300 ppm full scale requires corrective action. (Use of conditioning columns is one form of corrective action which may be taken.)

(c) Initial and periodic calibration. Calibrate the NDIR carbon monoxide analyzer prior to its introduction into service and monthly thereafter.

(1) Adjust the analyzer to optimize performance.

(2) Zero the carbon monoxide analyzer with either purified synthetic air or zero-grade nitrogen.

(3) Calibrate on each used operating range with carbon monoxide-in-N_2 calibration gases having nominal concentrations between 10 and 90 percent of that range. A minimum of six evenly spaced points covering at least 80 percent of the 10 to 90 range (64 percent) is required (see following table).

Example calibration points (percent)	Acceptable for calibration?
20, 30, 40, 50, 60, 70	No, range covered is 50 percent, not 64 percent.
20, 30, 40, 50, 60, 70, 80, 90	Yes.
10, 25, 40, 55, 70, 85	Yes.
10, 30, 50, 70, 90	No, though equally spaced and entire range covered, a minimum of six points is needed.

(4) Additional calibration points may be generated. For each range calibrated, if the deviation from a least-squares best-fit straight line is two percent or less of the value at each data point, concentration values may be calculated by use of a single calibration factor for that range. If the deviation exceeds two percent at any point, use the best-fit non-linear equation which represents the data to within two percent of each test point to determine concentration.

§91.318 Oxides of nitrogen analyzer calibration.

(a) Calibrate the chemiluminescent oxides of nitrogen analyzer as described in this section.

(b) Initial and periodic interference. Prior to its introduction into service, and monthly thereafter, check the chemiluminescent oxides of nitrogen analyzer for NO_2 to NO converter efficiency. Figure 2 in appendix B of this subpart is a reference for the following paragraphs:

(1) Follow good engineering practices for instrument start-up and operation. Adjust the analyzer to optimize performance.

(2) Zero the oxides of nitrogen analyzer with purified synthetic air or zero-grade nitrogen.

(3) Connect the outlet of the NO_X generator to the sample inlet of the oxides of nitrogen analyzer which has been set to the most common operating range.

(4) Introduce into the NO_X generator analyzer-system an NO-in-nitrogen (N_2) mixture with an NO concentration equal to approximately 80 percent of the most common operating range. The NO_2 content of the gas mixture must be less than 5 percent of the NO concentration.

(5) With the oxides of nitrogen analyzer in the NO mode, record the concentration of NO indicated by the analyzer.

(6) Turn on the NO_X generator O_2 (or air) supply and adjust the O_2 (or air) flow rate so that the NO indicated by the analyzer is about 10 percent less than indicated in paragraph (b)(5) of this section. Record the concentration of NO in this NO+O_2 mixture as value ''c.''

(7) Switch the NO_X generator to the generation mode and adjust the generation rate so that the NO measured on the analyzer is 20 percent of that measured in paragraph (b)(5) of this section. There must be at least 10 percent unreacted NO at this point. Record the concentration of residual NO as value ''d.''

(8) Switch the oxides of nitrogen analyzer to the NO_X mode and measure total NO_X. Record this value as ''a.''

(9) Switch off the NO_X generator but maintain gas flow through the system.

The oxides of nitrogen analyzer will indicate the NO_X in the $NO+O_2$ mixture. Record this value as ''b.''

(10) Turn off the NO_X generator O_2 (or air) supply. The analyzer will now indicate the NO_X in the original NO-in-N_2 mixture. This value should be no more than 5 percent above the value indicated in paragraph (b)(4) of this section.

(11) Calculate the efficiency of the NO_X converter by substituting the concentrations obtained into the following equation:

$$\text{percent efficiency} = (1 + (a - b)/(c - d)) \times 100$$

Where:

a=concentration obtained in paragraph (b)(8) of this section,

b=concentration obtained in paragraph (b)(9) of this section,

c=concentration obtained in paragraph (b)(6) of this section,

d=concentration obtained in paragraph (b)(7) of this section.

If converter efficiency is not greater than 90 percent, corrective action is required.

(c) Initial and periodic calibration. Prior to its introduction into service, and monthly thereafter, calibrate the chemiluminescent oxides of nitrogen analyzer on all normally used instrument ranges. Use the same flow rate as when analyzing samples. Proceed as follows:

(1) Adjust analyzer to optimize performance.

(2) Zero the oxides of nitrogen analyzer with zero-grade air or zero-grade nitrogen.

(3) Calibrate on each normally used operating range with NO-in-N_2 calibration gases with nominal concentrations between 10 and 90 percent of that range. A minimum of six evenly spaced points covering at least 80 percent of the 10 to 90 percent range (64 percent) is required (see following table).

Example calibration points (percent)	Acceptable for calibration?
20, 30, 40, 50, 60, 70	No, range covered is 50 percent, not 64 percent.
20, 30, 40, 50, 60, 70, 80, 90	Yes.
10, 25, 40, 55, 70, 85	Yes.
10, 30, 50, 70, 90	No, though equally spaced and entire range covered, a minimum of six points is needed.

(4) Additional calibration points may be generated. For each range calibrated, if the deviation from a least-squares best-fit straight line is two percent or less of the value at each data point, concentration values may be calculated by use of a single calibration factor for that range. If the deviation exceeds two percent at any point, use the best-fit non-linear equation which represents the data to within two percent of each test point to determine concentration.

(d) The initial and periodic interference, system check, and calibration test procedures specified in 40 CFR part 1065, subparts C and D, may be used in lieu of the procedures specified in this section.

[61 FR 52102, Oct. 4, 1996, as amended at 70 FR 40451, July 13, 2005]

§ 91.319 NO_X converter check.

(a) The efficiency of the converter used for the conversion of NO_2 to NO is tested as given in paragraphs (a)(1) through (a)(8) of this section (see Figure 2 in appendix B to this subpart).

(1) Using the test setup as shown in Figure 2 in appendix B to this subpart (see also § 91.318 of this chapter) and the procedures described in paragraphs (a)(2) through (a)(8) of this section, test the efficiency of converters by means of an ozonator.

(2) Calibrate the HCLD in the most common operating range following the manufacturer's specifications using zero and span gas (the NO content of which must amount to about 80 percent of the operating range and the NO_2 concentration of the gas mixture less than 5 percent of the NO concentration). The NO_X analyzer must be in the NO mode so that the span gas does not pass through the converter. Record the indicated concentration.

(3) Calculate the efficiency of the NO_X converter as described in § 91.318(b).

(4) Via a T-fitting, add oxygen continuously to the gas flow until the concentration indicated is about 20 percent less than the indicated calibration concentration given in paragraph (a)(2) of this section. Record the indicated concentration as ''c''. The ozonator is kept deactivated throughout the process.

(5) Activate the ozonator to generate enough ozone to bring the NO concentration down to about 20 percent (minimum 10 percent) of the calibration concentration given in paragraph (a)(2) of this section. Record the indicated concentration as ''d''.

NOTE: If, with the analyzer in the most common range the NO_X converter cannot give a reduction from 80 percent to 20 percent, then use the highest range which will give the reduction.

(6) Switch the NO analyzer to the NO_X mode, which means that the gas mixture (consisting of NO, NO_2, O_2 and N_2) now passes through the converter. Record the indicated concentration as ''a''.

(7) Deactivate the ozonator. The mixture of gases described in paragraph (a)(6) of this section passes through the converter into the detector. Record the indicated concentration as ''b''.

(8) Switched to NO mode with the ozonator deactivated, the flow of oxygen or synthetic air is also shut off. The NO_X reading of the analyzer may not deviate by more than ±5 percent of the theoretical value of the figure given in paragraph (a)(2) of this section.

(b) The efficiency of the converter must be tested prior to each calibration of the NO_X analyzer.

(c) The efficiency of the converter may not be less than 90 percent.

§91.320 Carbon dioxide analyzer calibration.

(a) Prior to its introduction into service, and monthly thereafter, or within one month prior to the certification test, calibrate the NDIR carbon dioxide analyzer as follows:

(1) Follow good engineering practices for instrument start-up and operation. Adjust the analyzer to optimize performance.

(2) Zero the carbon dioxide analyzer with either purified synthetic air or zero-grade nitrogen.

(3) Calibrate on each normally used operating range with carbon dioxide-in-N_2 calibration or span gases having nominal concentrations between 10 and 90 percent of that range. A minimum of six evenly spaced points covering at least 80 percent of the 10 to 90 percent range (64 percent) is required (see following table).

Example calibration points (percent)	Acceptable for calibration?
20, 30, 40, 50, 60, 70	No, range covered is 50 percent, not 64 percent.
20, 30, 40, 50, 60, 70, 80, 90	Yes.
10, 25, 40, 55, 70, 85	Yes.
10, 30, 50, 70, 90	No, though equally spaced and entire range covered, a minimum of six points is needed.

(4) Additional calibration points may be generated. For each range calibrated, if the deviation from a least-squares best-fit straight line is 2 percent or less of the value at each data point, concentration values may be calculated by use of a single calibration factor for that range. If the deviation exceeds 2 percent at any point, use the best-fit non-linear equation which represents the data to within 2 percent of each test point to determine concentration.

(b) The initial and periodic interference, system check, and calibration test procedures specified in 40 CFR part 1065, subparts C and D, may be used in lieu of the procedures in this section.

[61 FR 52102, Oct. 4, 1996, as amended at 70 FR 40451, July 13, 2005]

§91.321 NDIR analyzer calibration.

(a) *Detector optimization*. If necessary, follow the manufacturer's instructions for initial start-up and basic operating adjustments.

(b) *Calibration curve*. Develop a calibration curve for each range used as follows:

(1) Zero the analyzer.

(2) Span the analyzer to give a response of approximately 90 percent of full-scale chart deflection.

(3) Recheck the zero response. If it has changed more than 0.5 percent of full scale, repeat the steps given in paragraphs (b)(1) and (b)(2) of this section.

(4) Record the response of calibration gases having nominal concentrations between 10 and 90 percent of full-scale concentration. A minimum of six evenly spaced points covering at least 80 percent of the 10 to 90 percent range (64 percent) is required (see following table).

Example calibration points (percent)	Acceptable for calibration?
20, 30, 40, 50, 60, 70	No, range covered is 50 percent, not 64 percent.
20, 30, 40, 50, 60, 70, 80, 90	Yes.
10, 25, 40, 55, 70, 85	Yes.
10, 30, 50, 70, 90	No, though equally spaced and entire range covered, a minimum of six points is needed.

(5) Generate a calibration curve. The calibration curve must be of fourth order or less, have five or fewer coefficients, and be of the form of equation (1) or (2). Include zero as a data point. Compensation for known impurities in the zero gas can be made to the zero-data point. The calibration curve must fit the data points within 2 percent of point or one percent of full scale, whichever is less.

$$y = Ax^4 + Bx^3 + Cx^2 + Dx + E \qquad (1)$$

$$y = \frac{x}{Ax^4 + Bx^3 + Cx^2 + Dx + E} \qquad (2)$$

y=concentration
x=chart deflection

(6) Option. A new calibration curve need not be generated if:

(i) A calibration curve conforming to paragraph (b)(5) of this section exists;

(ii) The responses generated in paragraph (b)(4) of this section are within one percent of full scale or two percent of point, whichever is less, of the responses predicted by the calibration curve for the gases used in paragraph (b)(4) of this section.

(7) If multiple range analyzers are used, the lowest range used must meet the curve fit requirements below 15 percent of full scale.

(c) *Linear calibration criteria.* If any range is within 2 percent of being linear, a linear calibration may be used. To determine if this criterion is met:

(1) Perform a linear least-square regression on the data generated. Use an equation of the form y=mx, where x is the actual chart deflection and y is the concentration.

(2) Use the equation z=y/m to find the linear chart deflection (designated as z) for each calibration gas concentration (designated as y).

(3) Determine the linearity (designated as percent L) for each calibration gas by:

$$\text{percent L} = \frac{(zx)}{\text{Fullscale linear chart deflection}}(100)$$

(4) The linearity criterion is met if the percent L is less than ±2 percent for each data point generated. For each emission test, use a calibration curve of the form Y=mx. The slope (designated as m) is defined for each range by the spanning process.

§ 91.322 Calibration of other equipment.

Calibrate other test equipment as often as required by the manufacturer or as necessary according to good engineering practice.

§ 91.323 Analyzer bench checks.

(a) Prior to initial use and after major repairs, verify that each analyzer complies with the specifications given in Table 2 in appendix A to this subpart.

(b) If a stainless steel NO_2 to NO converter is used, condition all new or replacement converters. The conditioning consists of either purging the converter with air for a minimum of four hours or until the converter efficiency is greater than 90 percent. The converter must be at operational temperature while purging. Do not use this procedure prior to checking converter efficiency on in-use converters.

§ 91.324 Analyzer leakage check.

(a) *Vacuum side leak check.* (1) Check any location within the analysis system where a vacuum leak could affect the test results.

(2) The maximum allowable leakage rate on the vacuum side is 0.5 percent of the in-use flow rate for the portion

of the system being checked. The analyzer flows and bypass flows may be used to estimate the in-use flow rates.

(3) The sample probe and the connection between the sample probe and valve V2 (see Figure 1 in appendix B of this subpart) may be excluded from the leak check.

(b) *Pressure side leak check.* Substantial leaks of the sample on the pressure side of the system may impact sample integrity if the leaks are of sufficient magnitude. As a safety precaution, it is good engineering practice to perform periodic pressure side leak checks on the sampling system.

§91.325 Analyzer interference checks.

(a) Gases present in the exhaust other than the one being analyzed can interfere with the reading in several ways. Positive interference occurs in NDIR and PMD instruments when the interfering gas gives the same effect as the gas being measured, but to a lesser degree. Negative interference occurs in NDIR instruments by the interfering gas broadening the absorption band of the measured gas, and in CLD instruments by the interfering gas quenching the radiation. The interference checks described in this section are to be made initially and after any major repairs that could affect analyzer performance.

(b) CO analyzer water and CO_2 interference checks. Bubble through water at room temperature a CO_2 span gas having a concentration of between 80 percent and 100 percent inclusive of full scale of the maximum operating range used during testing and record the analyzer response. For dry measurements, this mixture may be introduced into the sample system prior to the water trap. The analyzer response must not be more than one percent of full scale for ranges equal to or above 300 ppm or more than three ppm for ranges below 300 ppm.

(c) NO_X analyzer quench check. The two gases of concern for CLD (and HCLD) analyzers are CO_2 and water vapor. Quench responses to these two gases are proportional to their concentrations and, therefore, require test techniques to determine quench at the highest expected concentrations experienced during testing.

(1) NO_X analyzer CO_2 quench check. (i) Pass a CO_2 span gas having a concentration of 80 percent to 100 percent of full scale of the maximum operating range used during testing through the CO_2 NDIR analyzer and record the value as ''a.''

(ii) Dilute the CO_2 span gas approximately 50 percent with NO span gas and pass through the CO_2 NDIR and CLD (or HCLD). Record the CO_2 and NO values as ''b'' and ''c'', respectively.

(iii) Shut off the CO_2 and pass only the NO span gas through the CLD (or HCLD). Record the NO value recorded as ''d.''

(iv) Calculate the percent CO_2 quench as follows, which may not exceed three percent:

$$\text{percent } CO_2 \text{ quench} = 100 - 100 \times [c \times a/(d \times a - d \times b)] \times a/b$$

Where:

a=Undiluted CO_2 concentration (percent)
b=Diluted CO_2 concentration (percent)
c=Diluted NO concentration (ppm)
d=Undiluted NO concentration (ppm)

(2) NO_X analyzer water quench check. (i) This check applies to wet measurements only. Pass an NO span gas having a concentration of 80 percent to 100 percent of full scale of a normal operating range through the CLD (or HCLD). Record the response as ''D.'' Bubble through water at room temperature the NO span gas and pass it through the CLD (or HCLD). Record the analyzers response as ''AR.'' Determine and record the analyzers absolute operating pressure and the bubbler water temperature. (It is important that the NO span gas contains minimal NO_2 concentration for this check. No allowance for absorption of NO_2 in water has been made in the following quench calculations.)

(ii) Calculations for water quench must consider dilution of the NO span gas with water vapor and scaling of the water vapor concentration of the mixture to that expected during testing. Determine the mixture's saturated vapor pressure (designated as ''Pwb'') that corresponds to the bubbler water temperature. Calculate the water concentration (''Z1'', percent) in the mixture by the following equation:

$$Z1 = 100 \times (Pwb / GP)$$

Where:

GP=the analyzer's standard operating pressure (pascals)

(iii) Calculate the expected dilute NO span gas and water vapor mixture concentration (designated as ''D1'') by the following equation:

$$D1 = D \times (1 - Z1/100)$$

(iv)(A) The maximum raw or dilute exhaust water vapor concentration expected during testing (designated as Wm) can be estimated from the CO_2 span gas (or as defined in the equation in this paragraph and designated as A) criteria in paragraph (c)(1) of this section and the assumption of a fuel atom H/C ratio of 1.8:1 as:

$$Wm(\%) = 0.9 \times A(\%)$$

Where:

A = maximum CO_2 concentration expected in the sample system during testing.

(B) Percent water quench shall not exceed 3 percent and shall be calculated by:

$$\%\ \text{Water Quench} = 100 \times (D1 - AR)/D1 \times Wm/Z1$$

[61 FR 52102, Oct. 4, 1996, as amended at 70 FR 40451, July 13, 2005]

§ 91.326 Pre- and post-test analyzer calibration.

Calibrate the operating range of each analyzer used during the test prior to and after each test in accordance with the following procedure (A chronic need for parameter adjustment can indicate a need for instrument maintenance.):

(a) Make the calibration using a zero gas and a span gas whose nominal value is between 80 percent and 100 percent of full scale, inclusive, of the measuring range.

(b) Use the same analyzer(s) flow rate and pressure as that used during exhaust emission test sampling.

(c) Warm-up and stabilize the analyzer(s) before the calibration is made.

(d) If necessary, clean and/or replace filter elements before calibration is made.

(e) Calibrate analyzer(s) as follows:

(1) Zero the analyzer using the appropriate zero gas. Adjust analyzer zero if necessary. Zero reading should be stable.

(2) Span the analyzer using the appropriate span gas for the range being calibrated. Adjust the analyzer to the calibration set point if necessary.

(3) Recheck zero and span set points.

(4) If the response of the zero gas or span gas differs more than one percent of full scale, then repeat paragraphs (e)(1) through (3) of this section.

§ 91.327 Sampling system requirements.

(a) *Sample component surface temperature.* For sampling systems which use heated components, use engineering judgment to locate the coolest portion of each component (pump, sample line section, filters, and so forth) in the heated portion of the sampling system that has a separate source of power or heating element. Monitor the temperature at that location. If several components are within an oven, then only the surface temperature of the component with the largest thermal mass and the oven temperature need be measured.

(b) If water is removed by condensation, monitor the sample gas temperature or sample dew point either within the water trap or downstream. It may not exceed 7 °C.

§ 91.328 Measurement equipment accuracy/calibration frequency table.

(a) The accuracy of measurements must be such that the maximum tolerances shown in Table 2 in appendix A to this subpart are not exceeded.

(b) Calibrate all equipment and analyzers according to the frequencies shown in Table 2 in appendix A to this subpart.

(c) Prior to initial use and after major repairs, bench check each analyzer (see § 91.323).

(d) Calibrate as specified in § 91.306 and §§ 91.315 through 91.322.

(e) At least monthly, or after any maintenance which could alter calibration, perform the following calibrations and checks.

(1) Leak check the vacuum side of the system (see § 91.324(a)).

(2) Verify that the automatic data collection system (if used) meets the requirements found in Table 2 in appendix A to this subpart.

(3) Check the fuel flow measurement instrument to insure that the specifications in Table 2 in appendix A to this subpart are met.

(f) Verify that all NDIR analyzers meet the water rejection ratio and the CO_2 rejection ratio as specified in § 91.325.

(g) Verify that the dynamometer test stand and power output instrumentation meet the specifications in Table 2 in appendix A to this subpart.

§ 91.329 Catalyst thermal stress test.

(a) *Oven characteristics*. The oven used for termally stressing the test catalyst must be capable of maintaining a temperature of 500 ±5 °C and 1000 ±10 °C.

(b) *Evaluation gas composition*. (1) A synthetic exhaust gas mixture is used for evaluating the effect of thermal stress on catalyst conversion efficiency.

(2) The synthetic exhaust gas mixture must have the following composition:

Constituent	Volume percent	Parts per million
Carbon Monoxide [1]	1	
Oxygen	1.3	
Carbon Dioxide	9	
Water Vapor	10	
Sulfur Dioxide		20
Oxides of Nitrogen		280
Hydrogen		3500
Hydrocarbon [1,2]		4000
Nitrogen=Balance		

[1] Alternatively, the carbon monoxide and hydrocarbon proportions of the mixture may be changed to 1.2% and 4650 ppm, respectively (using on of these alternative concentrations requires that the other be used simultaneously).
[2] Propylene/propane ratio=2/1.

[61 FR 52102, Oct. 4, 1996; 62 FR 20066, Apr. 24, 1997]

Appendix A to Subpart D of Part 91—Tables

Table 1—Symbols Used in Subparts D and E

Symbol	Term	Unit
A_{YM}	Final weighted emission test results	g/kW-hr
C_3H_8	Propane	
C_B	Concentration of emission in background sample	ppm
C_D	Concentration of emission in dilute sample	ppm
CO	Carbon monoxide	
CO_2	Carbon dioxide	
conc	Concentration (ppm by volume)	ppm
D_X.	Density of a specific emission (XX)	g/m^3
DXX	Volume concentration of a specific emission (XX) on a dry basis.	percent
DF	Dilution factor of dilute exhaust.	
D1	Water vapor mixture concentration	percent
f	Engine specific parameter considering atmospheric conditions	
G_{AIRD}	Intake air mass flow rate on dry basis	kg/h
G_{Fuel}	Fuel mass flow rate	kg/h
GP	Analyzer standard operating pressure	Pa
G_s	Mass of carbon measured during a sampling period	g
H	Absolute humidity (water content related to dry air)	gr/kg
H_2	Hydrogen	
i	Subscript denoting an individual mode	
IT	Indicated torque	N-m
K	Wet to dry conversion factor	
K_H	Humidity correction factor	
K_V	Calibration coefficient for critical flow venturi	
M_X.	Molecular weight of a specific molecule(XX)	g/mole
mass	Pollutant mass flow	g/h
M_{FUEL}	Mass of fuel consumed during a sampling period	g
N	Pump revolutions during test period	revs
N_2	Nitrogen	
NO	Nitric oxide	
NO_2	Nitrogen dioxide	
NO_X	Oxides of nitrogen	
O_2	Oxygen	
O_2 I	Oxygen concentration of the burner air	percent
P	Absolute pressure	kPa
P_{AUX}	Declared total power absorbed by auxiliaries fitted for the test	kW
P_B	Total barometric pressure (average of the pre-test and post-test values).	kPa
P_{dew}	Test ambient saturation vapor pressure at the dew point	kPa
P_e	Absolute pump outlet pressure	kPa
P_{ED}	Pressure drop between the inlet and throat of metering venturi	kPa
P_i	$P_i=P_{M,i}+P_{AUX,i}$	

TABLE 1—SYMBOLS USED IN SUBPARTS D AND E—Continued

Symbol	Term	Unit
P_M	Maximum power measured at the test speed under test conditions.	kW
P_P	Absolute pump inlet pressure	kPa
P_{PI}	Inlet pressure depression of venturi or pump	kPa
P_{PO}	Pressure head at CVS pump outlet	kPa
P_s	Dry atmospheric pressure	kPa
P_V	Absolute venturi inlet pressure	kPa
P_{wb}	Saturated vapor pressure	Pa
Q_C	Volumetric flow rate of dilute exhaust through CVS at STP	m^3/hr
Q_S	Gas flow rate	m^3/min
R_{STP}	Ideal gas constant at STP	m^3/mole
R_2	Fuel carbon weight fraction	g/g
STP	Standard temperature and pressure	
t	Elapsed time for test period	sec.
T	Absolute temperature at air inlet	°C
T_a	Ambient temperature	°C
T_{EI}	Air temperature in to metering venturi or flowmeter	°C
T_K	Absolute temperature	K
T_P	Absolute pump inlet temperature	°C
T_{PI}	Air temperature at CVS pump inlet	°C
T_{PO}	Air temperature at CVS pump outlet	°C
T_V	Absolute venturi inlet temperature	°C
V_O	Pump flow	m^3/rev
W	Average mass flow of emissions	g/hr
W_X.	Mass rate of specific emission (XX)	g/hr
WXX	Volume concentration in exhaust of specific emission (XX) on wet basis.	ppm, ppmC, %
WF	Weighing factor	
Z1	Water concentration	percent
α	Fuel specific factor representing the hydrogen to carbon ratio.	

TABLE 2—MEASUREMENT ACCURACY CALIBRATION FREQUENCY

No.	Item	Permissible deviation from reading [1]		Calibration frequency
		non-idle	idle	
1	Engine speed	±2%	±2%	Monthly.
2	Torque	±5%		Monthly.
3	Fuel consumption	±1%	±5%	Monthly.
4	Air consumption	±2%	±5%	As required.
5	Coolant temperature	±2 °C	Same	As required.
6	Lubricant temperature	±2 °C	Same	As required.
7	Exhaust back pressure	±5%	Same	As required.
8	Inlet depression	±5%	Same	As required.
9	Exhaust gas temperature	±15 °C	Same	As required.
10	Air inlet temperature (combustion air)	±2 °C	Same	As required.
11	Atmospheric pressure	±0.5%	Same	As required.
12	Humidity (combustion air) (relative)	±3.0%	Same	As required.
13	Fuel temperature	±2 °C	Same	As required.
14	Temperature with regard to dilution system.	±2 °C	Same	As required.
15	Dilution air humidity	±3% absolute	Same	As required.
16	HC analyzer	±2% [2]	Same	Monthly.
17	CO analyzer	±2% [2]	Same	Monthly.
18	NO_X analyzer	±2% [2]	Same	Monthly.
19	NO_X converter check	90%	Same	Monthly.
20	CO_2 analyzer	±2% [2]	Same	Monthly.

[1] All accuracy requirements pertain to the final recorded value which is inclusive of the data acquisition system.
[2] If reading is under 100 ppm then the accuracy shall be ±2 ppm.

TABLE 3—TEST FUEL SPECIFICATIONS

Item	Property	Tolerance	Procedure (ASTM) [1]
Sulfur, ppm max	1000		D 2622
Benzene, max. percent	1.5		D 3606
RVP, psi	8.6	±0.6	D 323
Octane, R+M/2	89.9	±3.1	D 2699 D 2700

TABLE 3—TEST FUEL SPECIFICATIONS—Continued

Item	Property	Tolerance	Procedure (ASTM) [1]
IBP, °C	32.8	±11.0	D 86
10% point, °C	53.3	±5.5	D 86
50% point, °C	101.7	±8.3	D 86
90% point, °C	160.0	±11.1	D 86
End Point, max. °C	212.8	.....	D 86
Phosphorus, g/l, max	0.02	.....	D 3231
Lead, g/l, max	0.02	.....	.....
Manganese, g/l, max	0.004	.....	.....
Aromatics, max. percent	35	.....	D 1319
Olefins, max. percent	10	.....	D 1319
Saturates, percent	remain	.....	D 1319

[1] All ASTM Procedures in this table have been incorporated by reference. See § 91.6.

APPENDIX B TO SUBPART D OF PART 91—FIGURES

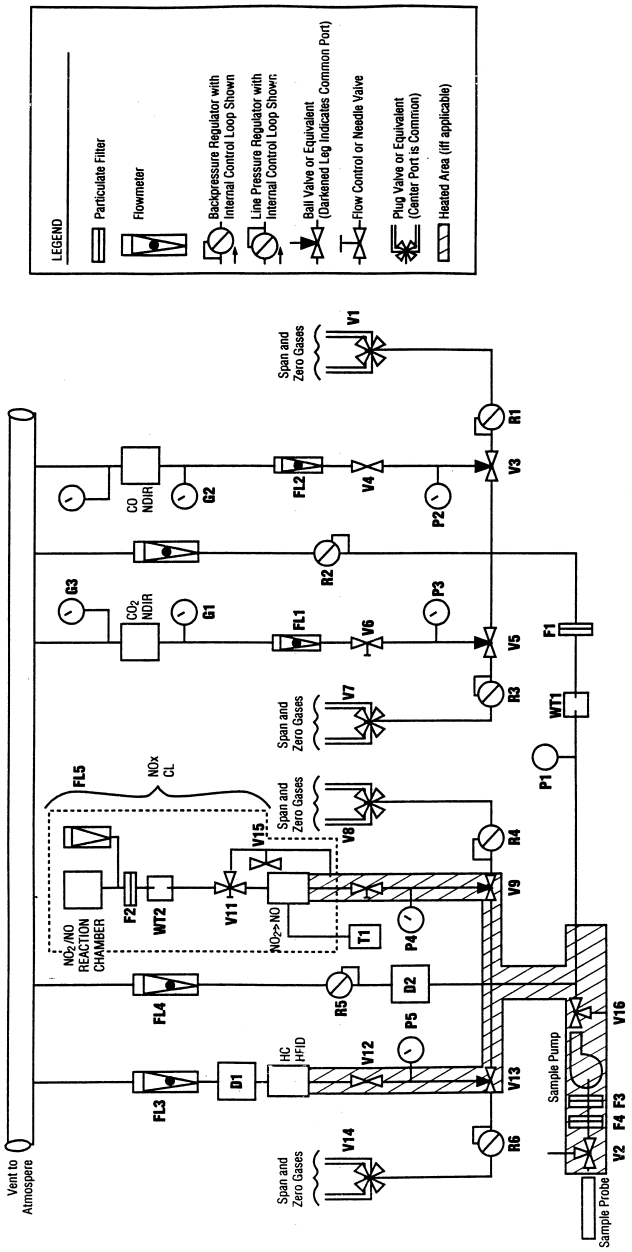

Figure 1. — Exhaust Gas Sampling and Analytical Train, Continuous Sampling

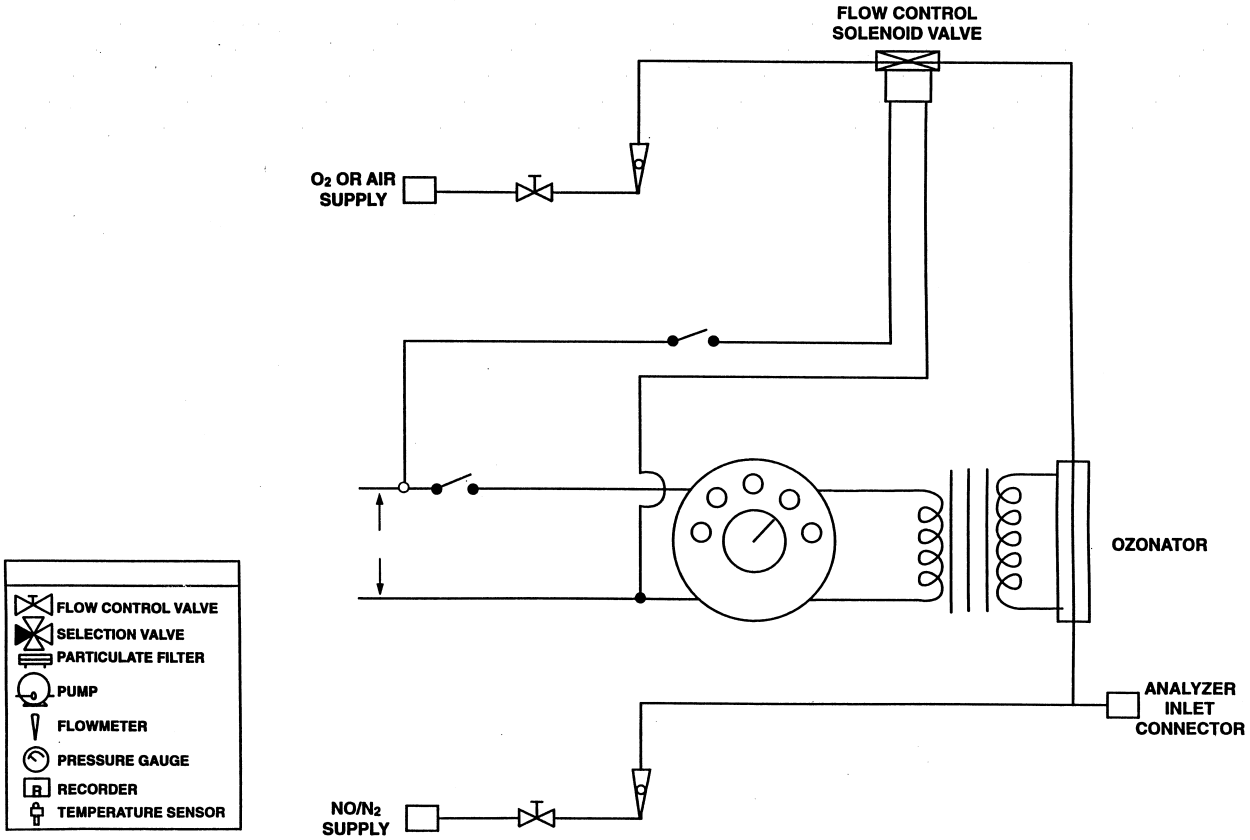

Figure 2. — NOx Converter Efficiency Detector

Subpart E—Gaseous Exhaust Test Procedures

§ 91.401 Scope; applicability.

(a) This subpart describes the procedures to follow in order to perform exhaust emission tests on new marine gasoline-fueled spark-ignition propulsion engines subject to the provisions of subpart A of this part 91. Provisions specific to raw gas sampling are in §§ 91.414 through 91.419, provisions specific to constant volume sampling are in §§ 91.420 through 91.426. All other sections in this subpart apply to both raw gas sampling and constant volume sampling unless indicated otherwise.

(b) Requirements for emission test equipment and calibrating this equipment are found in subpart D of this part.

§ 91.402 Definitions.

The definitions in §§ 91.3, 91.102, and 91.302 apply to this subpart.

§ 91.403 Symbols and abbreviations.

(a) The abbreviations in § 91.5 apply to this subpart.

(b) The symbols in Table 1 in appendix A to subpart D apply to this subpart.

§ 91.404 Test procedure overview.

(a) The test consists of prescribed sequences of engine operating conditions to be conducted on an engine dynamometer or equivalent load and speed measurement device. The exhaust gases generated during engine operation are sampled either raw or dilute, and specific components are analyzed through the analytical system.

(b) The tests are designed to determine the brake-specific emissions of hydrocarbons, carbon monoxide, and oxides of nitrogen. The test consists of one idle mode and four power modes with an exponential relationship between torque and speed which span the typical operating range of spark-ignition marine propulsion engines. These procedures require the determination of the concentration of each pollutant, fuel flow, and the power output during each mode. The measured values are weighted and used to calculate the grams of each pollutant emitted per brake kilowatt hour (g/kW-hr).

(c)(1) When an engine is tested for exhaust emissions the complete engine is tested, with all emission control devices installed and functioning.

(2) Additional accessories (for example, oil cooler, alternators, and so forth) may be installed, but such accessory loading will be considered parasitic in nature and observed power is used in the emission calculation.

(d) All emission control systems installed on or incorporated in the application must be functioning during all procedures in this subpart. In cases of component malfunction or failure, no maintenance is allowed without prior approval from the Administrator in accordance with § 91.118.

§ 91.405 Recorded information.

(a) Record the information described in this section for each test where applicable.

(b) *Test data; general.* (1) Engine identification number.

(2) Engine emissions control system.

(3) Test operator(s).

(4) Number of hours of operation accumulated on the engine prior to beginning the warm-up portion of the test (to the nearest tenth hour).

(5) Fuel identification.

(6) For two-stroke engines, fuel/oil mixture ratio.

(7) Date of most recent analytical assembly calibration.

(8) All pertinent instrument information such as tuning, gain, serial numbers, detector number, and calibration curve numbers. As long as this information is traceable, it may be summarized by system number or analyzer identification numbers.

(c) *Test data; pre-test.* (1) Date and time of day.

(2) Test number.

(3) Barometric pressure; as an option, barometric pressure can be measured as a modal measurement instead of or in addition to a pre- and post-test measurement.

(4) Recorder chart or equivalent. Identify for each test segment zero traces for each range used, and span traces for each range used.

(d) *Test data; modal.* (1) Recorder chart or equivalent. Identify for each

test mode the emission concentration traces and the associated analyzer range(s).

(2) Observed engine torque.

(3) Observed engine rpm.

(4) Engine intake air flow, if applicable.

(5) Test cell temperature and humidity for each mode.

(6) For raw gas testing; fuel flow for each mode. Fuel flow measurement is not required for dilute testing but is allowed. If the fuel flow measurement is a volume measurement system, record the fuel temperature in the measurement system for fuel density corrections to the mass flow rate. If the fuel temperature is within 3 °C of the calibration temperature, no density correction is required.

(7) Engine intake temperature and humidity for each mode, if applicable.

(8) Exhaust sample line temperature, if applicable.

(e) *Test data; post-test.* (1) Recorder chart or equivalent. Identify the hang-up check.

(2) Recorder chart or equivalent. Identify the zero traces for each range used and the span traces for each range used.

(3) Total number of hours of operation accumulated on the engine (to the nearest tenth hour).

(4) Barometric pressure, post-test segment.

§ 91.406 Engine parameters to be measured and recorded.

Measure or calculate, then record, the engine parameters in Table 1 in appendix A of this subpart.

§ 91.407 Engine inlet and exhaust systems.

(a) The marine engine manufacturer is liable for emission compliance over the full range of restrictions that are specified by the manufacturer for that particular engine.

(b) The air inlet filter system and exhaust muffler system combination used on the test engine must be the systems expected to yield the highest emission levels.

§ 91.408 Pre-test procedures.

(a) *Engine service accumulation and stabilization procedure.* Use the service accumulation procedure determined by the manufacturer for exhaust emission stabilizing of an engine, consistent with good engineering practice (see § 91.117).

(1) The manufacturer determines, for each engine family, the number of hours at which the engine exhaust emission control system combination is stabilized for emission testing. However, this stabilization procedure may not exceed 12 hours. The manufacturer must maintain, and provide to the Administrator upon request, a record of the rationale used in making this determination. If the manufacturer can document that, at some time prior to the full 12 hour service accumulation period, the engine emissions are decreasing for the remainder of the 12 hours, the service accumulation may be completed at that time. The manufacturer may elect to accumulate 12 hours on each test engine within an engine family without making this determination.

(2) During service accumulation, the fuel and lubricants specified in § 91.308 must be used.

(3) Engine maintenance during service accumulation is allowed only in accordance with § 91.117.

(b) *Engine pre-test preparation.* (1) Drain and charge the fuel tank(s) with the specified test fuel (see § 91.308) to 50 percent of the tank's nominal capacity. If an external fuel tank is used, the engine fuel inlet system pressure must be typical of what the engine will see in use.

(2) Operate the engine on the dynamometer measuring the fuel consumption (fuel consumption required only for raw gas sampling method) and torque before and after the emission sampling equipment is installed, including the sample probe, using mode 1 from Table 2 in appendix A of this subpart. The emission sampling equipment may not significantly affect the operational characteristics of the engine (typically, the results should agree within five percent).

(c) *Analyzer pre-test procedures.* (1) If necessary, warm up and stabilize the analyzer(s) before calibrations are performed.

(2) Replace or clean the filter elements and then vacuum leak check the

system per § 91.324(a). If necessary, allow the heated sample line, filters, and pumps to reach operating temperature.

(3) Perform the following system checks:

(i) If necessary, check the sample-line temperature. Heated FID sample line temperature must be maintained between 110 °C and 230 °C, a heated NO_X sample line temperature must be maintained between 60 °C and 230 °C.

(ii) Check that the system response time has been accounted for prior to sample collection data recording.

(iii) A hang-up check is permitted.

(4) Check analyzer zero and span before and after each test at a minimum. Further, check analyzer zero and span any time a range change is made or at the maximum demonstrated time span for stability for each analyzer used.

(d) Check system flow rates and pressures and reset if necessary.

§ 91.409 Engine dynamometer test run.

(a) Engine and dynamometer start-up.

(1) Only adjustments in accordance with § 91.118 may be made to the test engine prior to starting a test.

(2) If necessary, warm up the dynamometer as recommended by the dynamometer manufacturer ore good engineering practice.

(3) At the manufacturer's option, the engine can be run with the throttle in a fixed position or by using the engine's governor (if the engine is manufactured with a governor). In either case, the engine speed and load must meet the requirements specified in paragraph (b)(12) of this section.

(b) Each test consists of the following:

(1) Record the general test data as specified in § 91.405.

(2) Precondition the engine in the following manner;

(i) Operate the engine at idle for 2 to 3 minutes;

(ii) Operate the engine at a power greater than or equal to 50 percent power at the rated speed for 5 to 7 minutes;

(iii) Operate the engine at rated speed and maximum power for 25 to 30 minutes;

(iv) Option. For four-stroke engines, where appropriate, it is permitted to precondition the engine at rated speed and maximum power until the oil and water temperatures are stabilized. The temperatures are defined as stabilized if they are maintained within 2 percent of point for 2 minutes. The engine must be operated a minimum of 10 minutes for this option. This optional procedure may be substituted for step in paragraphs (b)(2)(iii) of this section;

(v) Option. If the engine has been operating on service accumulation for a minimum of 40 minutes, the service accumulation may be substituted for steps in paragraphs (b)(2) (i) through (iii) of this section.

(3) Record all pre-test data specified in § 91.405(c).

(4) Start the test cycle (see § 91.410) within 10 minutes of the completion of the steps required by paragraph (b)(2) of this section.

(5) During the first mode calculate the torque corresponding to 71.6, 46.5, and 25.3 percent of the maximum observed torque for the rated speed (see Table 2 in appendix A of this subpart).

(6) Once engine speed and load are set for a mode, run the engine for a sufficient period of time to achieve thermal stability. At the manufacturers option, determine and document the appropriate criterion for thermal stability for each engine family.

(7) Record all modal data specified in § 91.405(e) for a minimum time period of the last two minutes of each mode. Longer averaging periods are acceptable, but the data averaged must be from a continuous time period. The duration of time during which this data is recorded is referred to as the ''sampling period.'' The data collected during the sampling period is used for modal emission calculations.

(8) Continuously record the analyzer's response to the exhaust gas during the sampling period.

(9) Modes may be repeated.

(10) If a delay of more than one hour occurs between the end of one mode and the beginning of another mode, the test is void and must be restarted as described at paragraph (b)(1) of this section.

(11) The engine speed and load must be maintained within the requirements

of §91.410 during the sampling period for each mode. If this requirement is not met, the mode is void and must be restarted.

(12) If at any time during a mode, the test equipment malfunctions or the specifications in §91.410 can not be met, the test is void, and must be aborted. Corrective action should be taken and the test restarted.

(13) Fuel flow and air flow during the idle condition may be determined just prior to or immediately following the dynamometer sequence, if longer times are required for accurate measurements. If the dilute sampling method (Constant Volume Sampling) is used, neither fuel flow nor air flow measurements are required.

(c) Exhaust gas measurements. (1) Measure HC, CO, CO_2, and NO_X concentration in the exhaust sample.

(2) Each analyzer range that may be used during a test segment must have the zero and span responses recorded prior to the start of the test. Only the range(s) used to measure the emissions during the test is required to have its zero and span recorded after the completion of the test. Depending on the stability of each individual analyzer, more frequent zero checks or spans between modes may be necessary.

(3) It is permitted to change filter elements between test segments.

(4) A leak check is permitted between modes.

(5) A hang-up check is permitted between modes (see §91.413).

(6) If, during the emission measurement portion of a mode, the value of the gauges downstream of the NDIR analyzer(s) G3 or G4 (See Figure 1 in appendix B of subpart D of this part) differs by more than ±0.5 kPa, the mode is void.

§91.410 Engine test cycle.

(a) The 5-mode cycle specified in Table 2 in appendix A to this subpart shall be followed in dynamometer operation tests of marine engines.

(b) During each non-idle mode the specified speed and load shall be held to within ±50 rpm or ±2 percent of point, whichever is greater. During each idle mode the engine speed shall be held within ±75 rpm or ±5 percent of the manufacturers specified idle speed, whichever is greater. For direct drive products (no neutral gear), it is acceptable to have an accessory load on the engine during the idle mode provided that the engine speed is within ±5 percent of the manufacturers specified idle speed and the accessory load is representative of in use operation.

(c) If the operating conditions specified in paragraph (b) of this section for modes 2, 3, 4, and 5 cannot be maintained, the Administrator may authorize deviations from the specified load conditions. Such deviations shall not exceed 10 percent of the maximum torque at the test speed. The minimum deviations, above and below the specified load, necessary for stable operation shall be determined by the manufacturer and approved by the Administrator prior to the test run.

(d) Do not include power generated during the idle mode (mode 5) in the calculation of emissions results.

§91.411 Post-test analyzer procedures.

(a) Perform a hang-up check within 60 seconds of the completion of the last mode in the test. Use the following procedure:

(1) Introduce a zero-grade gas or room air into the sample probe or valve V2 (see Figure 1 in appendix B of subpart D of this part) to check the ''hangup zero'' response. Simultaneously start a time measurement.

(2) Select the lowest HC range used during the test.

(3) Within four minutes of beginning the time measurement in paragraph (a)(1) of this section, the difference between the zero gas response and the hang-up zero response shall not be greater than 5.0 percent of full scale or 10 ppmC whichever is greater.

(b) Begin the analyzer span checks within six minutes after the completion of the last mode in the test. Record for each analyzer the zero and span response for each range used during the preceding test or test segment.

(c) If during the test, the filter element(s) were replaced or cleaned, a vacuum check must be performed per §91.324(a) immediately after the span checks. If the vacuum side leak check does not meet the requirements of §91.324(a) the test is void.

(d) Read and record the post-test data specified in § 91.405(e).

(e) For a valid test, the analyzer drift between the before-segment and after-segment span checks for each analyzer must meet the following requirements:

(1) The span drift (defined as the change in the difference between the zero response and the span response) must not exceed two percent of full-scale chart deflection for each range used.

(2) The zero response drift must not exceed two percent of full-scale chart deflection for each range used above 155 ppm (or ppm C), or three percent of full-scale chart deflection for each range below 155 ppm (or ppm C).

§ 91.412 Data logging.

(a) A computer or any other automatic data collection (ADC) device(s) may be used as long as the system meets the requirements of this subpart.

(b) Determine from the data collection records the analyzer responses corresponding to the end of each mode.

(c) Record data at a minimum of one Hz (one time per second).

(d) Determine the final value for power by averaging the individually calculated power points for each value of speed and torque recorded during the sampling period. As an alternative, the final value for power can be calculated from the average values for speed and torque, collected during the sampling period.

(e) Determine the final value for CO_2, CO, HC, and NO_X concentrations by averaging the concentration of each point taken during the sample period for each mode.

§ 91.413 Exhaust sample procedure—gaseous components.

(a) Automatic data collection equipment requirements. The analyzer response may be read by automatic data collection (ADC) equipment such as computers, data loggers, etc. If ADC equipment is used the following is required:

(1) For dilute grab (''bag'') analysis, the analyzer response must be stable at greater than 99 percent of the final reading for the dilute exhaust sample bag. A single value representing the average chart deflection over a 10-second stabilized period shall be stored.

(2) For continuous analysis systems, a single value representing the average integrated concentration over a cycle shall be stored. Alternatively, the ADC may store the individual instantaneous values collected during the measurement period.

(3) The chart deflections or average integrated concentrations required in paragraphs (a)(1) and (a)(2) of this section may be stored on long-term computer storage devices such as computer tapes, storage discs, punch cards, and so forth, or they may be printed in a listing for storage. In either case a chart recorder is not required and records from a chart recorder, if they exist, need not be stored.

(4) If ADC equipment is used to interpret analyzer values, the ADC equipment is subject to the calibration specifications of the analyzer as if the ADC equipment is part of analyzer system.

(b) Data records from any one or a combination of analyzers may be stored as chart recorder records.

(c) Grab sample analysis. For dilute grab sample analysis perform the following sequence:

(1) Calibrate analyzers using the procedure described in § 91.326.

(2) Record the most recent zero and span response as the pre-analysis value.

(3) Measure HC, CO, CO_2, and NO_X background concentrations in the sample bag(s) and background sample bag(s) using the same flow rates and pressures.

(4) Good engineering practice dictates that analyzers used for continuous analysis should be operated such that the measured concentration falls between 15 percent and 100 percent of full scale.

(5) A post-analysis zero and span check of each range must be performed and the values recorded. The number of events that may occur between the pre and post checks is not specified. However, the difference between pre-analysis zero and span values (recorded in paragraph (c)(5) or (c)(6) of this section) versus those recorded for the post-analysis check may not exceed the zero drift limit or the span drift limit

of 2 percent of full scale chart deflection for any range used. Otherwise the test is void.

(d) Continuous sample analysis. For continuous sample analysis, perform the following sequence:

(1) Calibrate analyzers using the procedures described in §91.326.

(2) Leak check portions of the sampling system that operate at negative gauge pressures when sampling, and allow heated sample lines, filters, pumps, and so forth to stabilize at operating temperature.

(3) Option: Determine the hang-up for the FID or HFID sampling system:

(i) Zero the analyzer using zero air introduced at the analyzer port.

(ii) Flow zero air through the overflow sampling system. Check the analyzer response.

(iii) If the overflow zero response exceeds the analyzer zero response by two percent or more of the FID or HFID full-scale deflection, hang-up is indicated and corrective action must be taken (see paragraph (e) of this section).

(iv) The complete system hang-up check specified in paragraph (f) of this section is recommended as a periodic check.

(4) Obtain a stable zero reading.

(5) Good engineering practice dictates that analyzers used for continuous analysis should be operated such that the measured concentration falls between 15 percent and 100 percent of full scale.

(6) Record the most recent zero and span response as the pre-analysis values.

(7) Collect background HC, CO, CO_2, and NO_X in a sample bag (for dilute exhaust sampling only, see §91.422).

(8) Perform a post-analysis zero and span check for each range used at the conditions specified in paragraph (d)(1) of this section. Record these responses as the post-analysis values.

(9) Neither the zero drift nor the span drift between the pre-analysis and post-analysis checks on any range used may exceed three percent for HC, or two percent for NO_X. CO, and CO_2, of full scale chart deflection, or the test is void. (If the HC drift is greater than three percent of full-scale chart deflection, hydrocarbon hang-up is likely.)

(10) Determine background levels of NO_X. CO, or CO_2 (for dilute exhaust sampling only) by the grab (''bag'') technique outlined in paragraph (c) of this section.

(e) Hydrocarbon hang-up. If HC hang-up is indicated, the following sequence may be performed:

(1) Fill a clean sample bag with background air.

(2) Zero and span the HFID at the analyzer ports.

(3) Analyze the background air sample bag through the analyzer ports.

(4) Analyze the background air through the entire sample probe system.

(5) If the difference between the readings obtained is two ppm or more, clean the sample probe and the sample line.

(6) Reassemble the sample system, heat to specified temperature, and repeat the procedure in paragraphs (e)(1) through (e)(5) of this section.

§91.414 Raw gaseous exhaust sampling and analytical system description.

(a) Schematic drawing. An example of a sampling and analytical system which may be used for testing under this subpart is shown in Figure 4 in appendix B of this subpart. All components or parts of components that are wetted by the sample or corrosive calibration gases shall be either chemically cleaned stainless steel or inert material (e.g., polytetrafluoroethylene resin). The use of ''gauge savers'' or ''protectors'' with nonreactive diaphragms to reduce dead volumes is permitted.

(b) Sample probe. (1) The sample probe shall be a straight, closed end, stainless steel, multi-hole probe. The inside diameter shall not be greater than the inside diameter of the sample line + 0.03 cm. The wall thickness of the probe shall not be greater than 0.10 cm. The fitting that attaches the probe to the exhaust pipe shall be as small as practical in order to minimize heat loss from the probe.

(2) The probe shall have a minimum of three holes. The spacing of the radial planes for each hole in the probe must be such that they cover approximately equal cross-sectional areas of

the exhaust duct. The angular spacing of the holes must be approximately equal. The angular spacing of any two holes in one plane may not be 180° ±20° (i.e., section C-C of Figure 1 in appendix B of this subpart). The holes should be sized such that each has approximately the same flow. If only three holes are used, they may not all be in the same radial plane.

(3) The exhaust gas probe must be located in a position which yields a well mixed, homogeneous sample of the engine exhaust. The probe must extend radially through the exhaust duct prior to where the exhaust mixes with the cooling water. The cooling water flow may be rerouted if necessary to obtain an emission sample provided that the modification has no significant effect on the performance or emissions characteristics of the engine. The probe must pass through the approximate center and must extend across at least 80 percent of the diameter of the duct. The exact position of the probe may vary from engine family to engine family.

(c) Sample transfer line. (1) The maximum inside diameter of the sample line shall not exceed 1.32 cm.

(2) If valve V2 in Figure 1 of appendix B of Subpart D of this part is used, the sample probe must connect directly to valve V2 in Figure 1 of appendix B of subpart D of this part. The location of optional valve V2 may not be greater than 1.22 m from the exhaust duct.

(3) The location of optional valve V16 in Figure 1 of appendix B of subpart D of this part may not be greater than 61 cm from the sample pump. The leakage rate for this section on the pressure side of the sample pump may not exceed the leakage rate specification for the vacuum side of the pump.

(d) Venting. All vents including analyzer vents, bypass flow, and pressure relief vents of regulators should be vented in such a manner to avoid endangering personnel in the immediate area.

(e) Any variation from the specifications in this subpart including performance specifications and emission detection methods may be used only with prior approval by the Administrator.

(f) Additional components, such as instruments, valves, solenoids, pumps, switches, and so forth, may be employed to provide additional information and coordinate the functions of the component systems.

(g) The following requirements must be incorporated in each system used for raw testing under this subpart.

(1) Take the sample for all components with one sample probe and split it internally to the different analyzers.

(2) Heat the sample transport system from the engine exhaust pipe to the HC analyzer for the raw gas sampling method as indicated in Figure 1 in appendix B of subpart D of this part. The NO_X analyzer for the raw gas sampling method may be heated as indicated in Figure 1 in appendix B of subpart D of this part. The HC analyzer and the NO_X analyzer for the dilute sampling method may be heated as indicated in Figure 1 in appendix B of subpart D of this part.

§ 91.415 Raw gaseous sampling procedures.

Fit all heated sampling lines with a heated filter to extract solid particles from the flow of gas required for analysis. The sample line for HC measurement must be heated. The sample line for CO, CO_2, and NO_X may be heated or unheated.

§ 91.416 Intake air flow measurement specifications.

(a) If used, the engine intake air flow measurement method used must have a range large enough to accurately measure the air flow over the engine operating range during the test. Overall measurement accuracy must be ±2 percent of full-scale value of the measurement device for all modes except the idle mode. For the idle mode, the measurement accuracy shall be ±5 percent or less of the full-scale value. The Administrator must be advised of the method used prior to testing.

(b) When an engine system incorporates devices that affect the air flow measurement (such as air bleeds, air injection, pulsed air, and so forth) that result in understated exhaust emission results, make corrections to the exhaust emission results to account for such effects.

§91.417 Fuel flow measurement specifications.

(a) Fuel flow measurement is required only for raw testing but is allowed for dilute testing.

(b) The fuel flow rate measurement instrument must have a minimum accuracy of ±2 percent of full-scale flow rate for each measurement range used.

§91.418 Data evaluation for gaseous emissions.

For the evaluation of the gaseous emissions recording, record the last two minutes of each mode and determine the average values for HC, CO, CO_2, and NO_X during each mode from the average concentration readings determined from the corresponding calibration data.

§91.419 Raw emission sampling calculations.

(a) Derive the final test results through the steps described in this section.

(b) Air and fuel flow method. If both air and fuel flow mass rates are measured, the following equations are used to determine the weighted emission values for the test engine:

$$W_{NO_X} = \left(G_{AIRD} + G_{FUEL}\right) \times \frac{M_{NO_2}}{M_{exh}} \times WNO_X \times K_H \times \frac{1}{10^6}$$

$$W_{HC} = \left(G_{AIRD} + G_{FUEL}\right) \times \frac{M_{HC_{exh}}}{M_{exh}} \times WHC \times \frac{1}{10^6}$$

$$W_{CO} = \left(G_{AIRD} + G_{FUEL}\right) \times \frac{M_{CO}}{M_{exh}} \times WCO \times \frac{1}{10^2}$$

Where:

W_{HC} = Mass rate of HC in exhaust [g/hr],

G_{AIRD} = Intake air mass flow rate on dry basis [g/hr],

G_{FUEL} = Fuel mass flow rate [g/hr],

M_{HCexh} = Molecular weight of hydrocarbons in the exhaust; see the following equation:

$M_{HCexh} = 12.01 + 1.008 \times \alpha$

Where:

α=Hydrocarbon/carbon atomic ratio of the fuel.

M_{exh}=Molecular weight of the total exhaust; see the following equation:

$$M_{exh} = \frac{M_{HC_{exh}} \times WHC}{10^6} + \frac{28.01 \times WCO}{10^2} + \frac{44.1 \times WCO_2}{10^2} + \frac{46.01 \times WNO_x}{10^6} + \frac{2.016 \times WH_2}{10^2} + 18.01 \times (1 - K) + 28.01 \times \frac{\left[100 - \frac{WHC}{10^4} - WCO - WCO_2 - \frac{WNO_x}{10^4} - WH_2 - 100 \times (1 - K)\right]}{10^2}$$

Where:

WHC = HC volume concentration in exhaust, ppmC wet

WCO = CO percent concentration in the exhaust, wet

DCO = CO percent concentration in the exhaust, dry

WCO_2 = CO_2 percent concentration in the exhaust, wet

DCO_2 = CO_2 percent concentration in the exhaust, dry

WNO_X = NO volume concentration in exhaust, ppm wet

WH_2 = H_2 percent concentration in exhaust, wet

K = correction factor to be used when converting dry measurements to a wet basis. Therefore, wet concentration = dry concentration × K, where K is:

$$\frac{1}{1+0.005\times(DCO+DCO_2)\times\alpha-0.01\times DH_2}$$

DH_2 = H_2 percent concentration in exhaust, dry, calculated from the following equation:

$$DH_2=\frac{0.5\times\alpha\times DCO\times(DCO+DCO_2)}{DCO+(3\times DCO_2)}$$

W_{CO} = Mass rate of CO in exhaust, [g/hr]

M_{CO} = Molecular weight of CO = 28.01

W_{NOx} = Mass rate of NO_X in exhaust, [g/hr]

M_{NO2} = Molecular weight of NO_2 = 46.01

K_H = Factor for correcting the effects of humidity on NO_2 formation for four-stroke gasoline engines; see the equation below:

$$K_H=\frac{1}{1-0.0329\times(H-10.71)}$$

Where:

H = specific humidity of the intake air in grams of moisture per kilogram of dry air.

For two-stroke gasoline engines, KH should be set to 1.

(c) Fuel flow method. The following equations are to be used when fuel flow is selected as the basis for mass emission calculations using the raw gas method.

$$W_{HC}=\frac{G_{FUEL}}{TC}\times\frac{WHC}{10^4}$$

$$W_{CO}=\frac{M_{CO}}{M_F}\times\frac{G_{FUEL}}{TC}\times WCO$$

$$W_{NO_X}=\frac{M_{NOX}}{M_F}\times\frac{G_{FUEL}}{TC}\times\frac{WNO_X}{10^4}\times K_H$$

Where:

W_{HC} = Mass rate of HC in exhaust, [g/hr]

M_F = Molecular weight of test fuel; see following equation:

$$M_F=12.01+1.008\times\alpha$$

G_{FUEL} = Fuel mass flow rate, [g/hr]

TC = Total carbon; see following equation:

$$TC=WCO+WCO_2+\frac{WHC}{10^4}$$

WHC = HC volume concentration in exhaust, ppmC wet

WCO = CO percent concentration in the exhaust, wet

DCO = CO percent concentration in the exhaust, dry

WCO_2 = CO_2 percent concentration in the exhaust, wet

DCO_2 = CO_2 percent concentration in the exhaust, dry

WNO_X = NO volume concentration in exhaust, ppm wet

WH2 = H_2 percent concentration in exhaust, wet

K = correction factor to be used when converting dry measurements to a wet basis. Therefore, wet concentration = dry concentration × K, where K is:

$$K = \frac{1}{1 + 0.005 \times (DCO + DCO_2) \times \alpha - 0.01 \times DH_2}$$

DH_2 = H_2 percent concentration in exhaust, dry, calculated from the following equation:

$$DH_2 = \frac{0.5 \times \alpha \times DCO \times (DCO + DCO_2)}{DCO + (3 \times DCO_2)}$$

W_{CO} = Mass rate of CO in exhaust, [g/hr]
M_{CO} = Molecular weight of CO = 28.01
W_{NOx} = Mass rate of NO_X in exhaust, [g/hr]
M_{NO2} = Molecular weight of NO_2 = 46.01
K_H = Factor for correcting the effects of humidity on NO_2 formation for four-stroke gasoline engines; see the equation below:

$$K_H = \frac{1}{1 - 0.0329 \times (H - 10.71)}$$

Where:

H = specific humidity of the intake air in grams of moisture per kilogram of dry air.

For two-stroke gasoline engines, KH should be set to 1.

(d) The final reported emission test results must be computed by using the following formula for each individual gas component:

$$Y_{wm} = \frac{\Sigma(W_i \times f_i)}{\Sigma(P_i \times f_i)}$$

Where:

Y_{wm} = Weighted mass emission level (HC, CO, NO_X) for a test [g/kW-hr].
W_i = Average mass flow rate (W_{HC}, W_{CO}, W_{NOx}) of an emission from the test engine during mode i, [g/hr].
f_i = Weighting factors for each mode according to §91.410(a)
P_i = Average power measured during mode i, [kW], calculated according to the formula given in §91.423(b). Power for the idle mode shall always be zero for this calculation.

(e) The final reported weighted brake-specific fuel consumption (WBSFC) shall be computed by use of the following formula:

$$WBSFC = \frac{\Sigma(F_i \times f_i)}{\Sigma(P_i \times f_i)}$$

Where:

WBSFC = Weighted brake-specific fuel consumption in grams of fuel per kilowatt-hour (g/kW-hr).
F_i = Fuel mass flow rate of the engine during mode i, [g/hr].
f_i = Weighting factors for each mode according to §91.410(a)
P_i = Average power measured during mode i, [kW], calculated according to the formula given in §91.423(b). Power for the idle mode shall always be zero for this calculation.

[61 FR 52102, Oct. 4, 1996, as amended at 67 FR 68340, Nov. 8, 2002; 70 FR 40452, July 13, 2005]

§91.420 CVS concept of exhaust gas sampling system.

(a) A dilute exhaust sampling system is designed to directly measure the true mass of emissions in engine exhaust without the necessity of measuring either fuel flow or intake air flow. This is accomplished by diluting the exhaust produced by an engine under test with ambient background air and measuring the total diluted exhaust flow rate and the concentration of emissions within the dilute flow. Total mass flow of an emission is then easily calculated.

(b) A constant volume sampler (CVS) is typically used to control the total amount of dilute flow through the system. As the name implies, a CVS restricts flow to a known value dependent only on the dilute exhaust temperature and pressure.

(c) For the testing described in this subpart, a CVS must consist of: A mixing tunnel into which the engine exhaust and dilutant (background) air are dumped; a dilute exhaust flow metering system; a dilute exhaust sample port; a background sample port; a dilute exhaust sampling system; and a background sampling system.

(1) *Mixing tunnel.* The mixing tunnel must be constructed such that complete mixing of the engine exhaust and background air is assured prior to the sampling probe.

(2) *Exhaust flow metering system.* A dilute exhaust flow metering system must be used to control the total flow

rate of the dilute engine exhaust as described in § 91.421.

(3) *Exhaust sample port.* A dilute exhaust sample port must be located in or downstream of the mixing tunnel at a point where complete mixing of the engine exhaust and background air is assured.

(4) *Background sample port.* A dilute background sample port must be located in the stream of background air before it is mixed with the engine exhaust. The background probe must draw a representative sample of the background air during each sampling mode.

(5) *Exhaust sampling system.* The dilute exhaust sampling system controls the flow of samples from the mixing tunnel to the analyzer system. This could be either a continuous sampling system or grab (bag) sampling system. If a critical flow venturi (CFV) is used on the dilute exhaust sample probe, this system must assure that the sample CFV is in choke flow during testing. If no CFV is used, this system must assure a constant volumetric flow rate through the dilute exhaust sample probe or must incorporate electronic flow compensation.

(6) *Background sampling system.* The background sampling system controls the flow of samples from the background air supply to the analyzer system. This could be either a continuous sampling system or grab (bag) sampling system. This system must assure a constant volumetric flow rate through the background sample probe.

§ 91.421 Dilute gaseous exhaust sampling and analytical system description.

(a) General. The exhaust gas sampling system described in this section is designed to measure the true mass emissions of engine exhaust. This system utilizes the Constant volume Sampling (CVS) concept (described in § 91.420) of measuring mass emissions of HC, NO_X. CO, and CO_2. Grab sampling for individual modes is an acceptable method of dilute testing for all constituents, HC, NO_X. CO, and CO_2. Continuous dilute sampling is not required for any of the exhaust constituents, but is allowable for all. Heated sampling is not required for any of the constituents, but is allowable for HC and NO_X. The mass of gaseous emissions is determined from the sample concentration and total flow over the test period. As an option, the measurement of total fuel mass consumed over a cycle may be substituted for the exhaust measurement of CO_2. General requirements are as follows:

(1) This sampling system requires the use of a Positive Displacement Pump—Constant Volume Sampler (PDP-CVS) system with a heat exchanger, or a Critical Flow Venturi—Constant Volume Sampler (CFV-CVS) system with CVS sample probes and/or a heat exchanger or electronic flow compensation. Figure 2 in appendix B of this subpart is a schematic drawing of the PDP-CVS system. Figure 3 in appendix B of this subpart is a schematic drawing of the CFV-CVS system.

(2) The HC analytical system requires:

(i) Grab sampling (see § 91.420, and Figure 2 or Figure 3 in appendix B of this subpart) and analytical capabilities (see § 91.423, and Figure 4 in appendix B of this subpart), or

(ii) Continuously integrated measurement of diluted HC meeting the minimum requirements and technical specifications contained in paragraph (b)(2) of this section.

(iii) The dilute HC analytical system for marine spark-ignition engines does not require a heated flame ionization detector (HFID).

(iv) If used, the HFID sample must be taken directly from the diluted exhaust stream through a heated probe and integrated continuously over the test cycle.

(v) The heated probe must be located in the sampling system far enough downstream of the mixing area to ensure a uniform sample distribution across the CVS duct at the sampling zone.

(3) The CO and CO_2 analytical system requires:

(i) Grab sampling (see § 91.420, and Figure 2 or Figure 3 in appendix B of this subpart) and analytical capabilities (see § 91.423, and Figure 4 in appendix B of this subpart), or

(ii) Continuously integrated measurement of diluted CO and CO_2 meeting

the minimum requirements and technical specifications contained in paragraph (b)(4) of this section.

(4) The NO_X analytical system requires:

(i) Grab sampling (see §91.420, and Figure 2 or Figure 3 in appendix B of this subpart) and analytical capabilities (see §91.423, and Figure 4 in appendix B of this subpart), or

(ii) A continuously integrated measurement of diluted NO_X meeting the minimum requirements and technical specifications contained in paragraph (b)(4) of this section.

(5) Since various configurations can produce equivalent results, exact conformance with these drawings is not required. Additional components such as instruments, valves, solenoids, pumps, and switches may be used to provide additional information and coordinate the functions of the component systems. Other components, such as snubbers, which are not needed to maintain accuracy on some systems, may be excluded if their exclusion is based upon good engineering judgment.

(6) Other sampling and/or analytical systems may be used if shown to yield equivalent results and if approved in advance by the Administrator.

(b) Component description. The components necessary for exhaust sampling must meet the following requirements:

(1) *Exhaust dilution system.* The PDP-CVS must conform to all of the requirements listed for the exhaust gas PDP-CVS in §91.420 of this chapter. The CFV-CVS must conform to all of the requirements listed for the exhaust gas CFV-CVS in §91.420. In addition, the CVS must conform to the following requirements:

(i) The flow capacity of the CVS must be sufficient to maintain the diluted exhaust stream in the dilution system at a temperature of 190 °C or less at the sampling zone for hydrocarbon measurement and as required to prevent condensation at any point in the dilution system. Gaseous emission samples may be taken directly from this sampling point.

(ii) For the CFV-CVS, either a heat exchanger or electronic flow compensation is required (see Figure 3 in appendix B of this subpart).

(iii) For the CFV-CVS when a heat exchanger is used, the gas mixture temperature, measured at a point immediately ahead of the critical flow venturi, must be within ±11 °C of the average operating temperature observed during the test with the simultaneous requirement that condensation does not occur. The temperature measuring system (sensors and readout) must have an accuracy and precision of ±2 °C. For systems utilizing a flow compensator to maintain proportional flow, the requirement for maintaining constant temperature is not necessary.

(2) *Continuous HC measurement system.* (i) The continuous HC sample system (as shown in Figure 2 or 3 in appendix B of this subpart) uses an ''overflow'' zero and span system. In this type of system, excess zero or span gas spills out of the probe when zero and span checks of the analyzer are made.

(ii) No other analyzers may draw a sample from the continuous HC sample probe, line, or system, unless a common sample pump is used for all analyzers and the sample line system design reflects good engineering practice.

(iii) The overflow gas flow rates into the sample line must be at least 105 percent of the sample system flow rate.

(iv) The overflow gases must enter the sample line as close as practical to the outside surface of the CVS duct or dilution system.

(v) The continuous HC sampling system consists of a probe (which for a HFID analyzer must raise the sample to the specified temperature) and, where used, a sample transfer system (which for a HFID must maintain the specified temperature). The HFID continuous hydrocarbon sampling system (exclusive of the probe) must:

(A) Maintain a wall temperature of 190 ±11 °C as measured at every separately controlled heated component (that is, filters, heated line sections), using permanent thermocouples located at each of the separate components.

(B) Have a wall temperature of 190 ±11 °C over its entire length. The temperature of the system is demonstrated by profiling the thermal characteristics of the system where possible at initial installation and after any major maintenance performed on the system.

The profiling is to be accomplished using the insertion thermocouple probing technique. The system temperature must be monitored continuously during testing at the locations and temperature described in § 91.421(b)(2).

(C) Maintain a gas temperature of 190 ±11 °C immediately before the heated filter and HFID. Determine these gas temperatures by a temperature sensor located immediately upstream of each component.

(vi) The continuous hydrocarbon sampling probe:

(A) Is defined as the first 25.4 to 76.2 cm of the continuous hydrocarbon sampling system.

(B) Has a 0.483 cm minimum inside diameter.

(C) Is installed in the dilution system at a point where the dilution air and exhaust are well mixed and provide a homogenous mixture.

(D) Is sufficiently distant (radially) from other probes and the system wall so as to be free from the influence of any wakes or eddies.

(E) For a continuous HFID sample probe, the probe must increase the gas stream temperature to 190 ±11 °C at the exit of the probe. Demonstrate the ability of the probe to accomplish this using the insertion thermocouple technique at initial installation and after any major maintenance. Demonstrate compliance with the temperature specification by continuously recording during each test the temperature of either the gas stream or the wall of the sample probe at its terminus.

(vii) The response time of the continuous measurement system must be taken into account when logging test data.

(3) *Sample mixing*. (i) configure the dilution system to ensure a well mixed, homogeneous sample prior to the sampling probe(s).

(ii) Make the temperature of the diluted exhaust stream inside the dilution system sufficient to prevent water condensation.

(iii) Direct the engine exhaust downstream at the point where it is introduced into the dilution system.

(4) *Continuously integrated NO_X. CO, and CO_2 measurement systems*. (i) Sample probe requirements:

(A) The sample probe for continuously integrated NO_X. CO, and CO_2 must be in the same plane as the continuous HC probe, but sufficiently distant (radially) from other probes and the tunnel wall so as to be free from the influences of any wakes or eddies.

(B) The sample probe for continuously integrated NO_X. CO, and CO_2 must be heated and insulated over the entire length, to prevent water condensation, to a minimum temperature of 55 °C. Sample gas temperature immediately before the first filter in the system must be at least 55 °C.

(ii) Conform to the continuous NO_X, CO, or CO_2 sampling and analysis system to the specifications of 40 CFR 1065.145, with the following exceptions and revisions:

(A) Heat the system components requiring heating only to prevent water condensation, the minimum component temperature is 55 °C.

(B) Coordinate analysis system response time with CVS flow fluctuations and sampling time/test cycle offsets to meet the time-alignment and dispersion specifications in 40 CFR pat 1065, subpart C.

(C) Use only analytical gases conforming to the specifications of 40 CFR 1065.750 for calibration, zero, and span checks.

(D) Use a calibration curve conforming to 40 CFR part 1065, subparts C and D, for CO, CO_2, and NO_X for any range on a linear analyzer below 155 ppm.

(iii) Convert the chart deflections or voltage output of analyzers with nonlinear calibration curves to concentration values by the calibration curve(s) specified in 40 CFR part 1065, subpart D, before flow correction (if used) and subsequent integration takes place.

[61 FR 52102, Oct. 4, 1996, as amended at 70 FR 40452, July 13, 2005]

§ 91.423 Exhaust gas analytical system; CVS grab sample.

(a) *Schematic drawings*. Figure 4 in appendix B of this subpart is a schematic drawing of the exhaust gas analytical system used for analyzing CVS grab ''bag'' samples from spark-ignition engines. Since various configurations can

produce accurate results, exact conformance with the drawing is not required. Additional components such as instruments, valves, solenoids, pumps and switches may be used to provide additional information and coordinate the functions of the component systems. Other components such as snubbers, which are not needed to maintain accuracy in some systems, may be excluded if their exclusion is based on good engineering judgement.

(b) *Major component description.* The analytical system, Figure 4 in Appendix B of this subpart, consists of a flame ionization detector (FID) or a heated flame ionization detector (HFID) for the measurement of hydrocarbons, nondispersive infrared analyzers (NDIR) for the measurement of carbon monoxide and carbon dioxide, and a chemiluminescence detector (CLD) (or heated CLD (HCLD)) for the measurement of oxides of nitrogen. The exhaust gas analytical system shall conform to the following requirements:

(1) The CLD (or HCLD) requires that the nitrogen dioxide present in the sample be converted to nitric oxide before analysis. Other types of analyzers may be used if shown to yield equivalent results and if approved in advance by the Administrator.

(2) If CO instruments are used which are essentially free of CO_2 and water vapor interference, the use of the conditioning column may be deleted. (See §§91.317 and 91.320.)

(3) A CO instrument will be considered to be essentially free of CO_2 and water vapor interference if its response to a mixture of three percent CO_2 in N_2, which has been bubbled through water at room temperature, produces an equivalent CO response, as measured on the most sensitive CO range, which is less than one percent of full scale CO concentration on ranges above 300 ppm full scale or less than 3 ppm on ranges below 300 ppm full scale. (See §91.317.)

(c) *Alternate analytical systems.* Analysis systems meeting the specifications and requirements of this subpart for dilute sampling may be used upon approval of the Administrator.

(d) *Other analyzers and equipment.* Other types of analyzers and equipment may be used if shown to yield equivalent results and if approved in advance by the Administrator.

§91.424 Dilute sampling procedure—CVS calibration.

(a) The CVS is calibrated using an accurate flowmeter and restrictor valve. (1) The flowmeter calibration shall be traceable to the National Institute for Standards and Testing (NIST), and will serve as the reference value (NIST ''true'' value) for the CVS calibration.)

NOTE: In no case should an upstream screen or other restriction which can affect the flow be used ahead of the flowmeter unless calibrated throughout the flow range with such a device.)

(2) The CVS calibration procedures are designed for use of a ''metering venturi'' type flowmeter. Large radius or American Society of Mechanical Engineers (ASME) flow nozzles are considered equivalent if traceable to NIST measurements. Other measurement systems may be used if shown to be equivalent under the test conditions in this section and traceable to NIST measurements.

(3) Measurements of the various flowmeter parameters are recorded and related to flow through the CVS.

(4) Procedures used by EPA for both PDP-CVS and CFV-CVS are outlined below. Other procedures yielding equivalent results may be used if approved in advance by the Administrator.

(b) After the calibration curve has been obtained, verification of the entire system may be performed by injecting a known mass of gas into the system and comparing the mass indicated by the system to the true mass injected. An indicated error does not necessarily mean that the calibration is wrong, since other factors can influence the accuracy of the system (e.g., analyzer calibration, leaks, or HC hangup). A verification procedure is found in paragraph (e) of this section.

(c) *PDP-CVS calibration.* (1) The following calibration procedure outlines the equipment, the test configuration, and the various parameters which must be measured to establish the flow rate of the CVS pump.

(i) All the parameters related to the pump are simultaneously measured with the parameters related to a flowmeter which is connected in series with the pump.

(ii) The calculated flow rate, in cm^3/s, (at pump inlet absolute pressure and temperature) can then be plotted versus a correlation function which is the value of a specific combination of pump parameters.

(iii) The linear equation which relates the pump flow and the correlation function is then determined.

(iv) In the event that a CVS has a multiple speed drive, a calibration for each range used must be performed.

(2) This calibration procedure is based on the measurement of the absolute values of the pump and flowmeter parameters that relate the flow rate at each point. Two conditions must be maintained to assure the accuracy and integrity of the calibration curve:

(i) The temperature stability must be maintained during calibration. (Flowmeters are sensitive to inlet temperature oscillations; this can cause the data points to be scattered. Gradual changes in temperature are acceptable as long as they occur over a period of several minutes.)

(ii) All connections and ducting between the flowmeter and the CVS pump must be absolutely void of leakage.

(3) During an exhaust emission test the measurement of these same pump parameters enables the user to calculate the flow rate from the calibration equation.

(4) Connect a system as shown in Figure 5 in appendix B of this subpart. Although particular types of equipment are shown, other configurations that yield equivalent results may be used if approved in advance by the Administrator. For the system indicated, the following measurements and accuracies are required:

CALIBRATION DATA MEASUREMENTS

Parameter	Symbol	Units	Sensor-readout tolerances
Barometric pressure (corrected)	P_B	kPa	±0.34 kPa
Ambient temperature	T_{EI}	°C	±0.28 °C
Air temperature into metering venturi	T_{EI}	°C	±1.11 °C
Pressure drop between the inlet and throat of metering venturi.	P_{ED}	kPa	±0.012 kPa
Air flow	Q_S	m^3/min.	±0.5 percent of NIST value
Air temperature at CVS pump inlet	P_{TI}	°C	±1.11 °C
Pressure depression at CVS pump inlet.	P_{PI}	kPa	±0.055 kPa
Pressure head at CVS pump outlet	P_{PO}	kPa	±0.055 kPa
Air temperature at CVS pump outlet (optional).	P_{TO}	°C	1.11 °C
Pump revolutions during test period	N	Revs	±1 Rev.
Elapsed time for test period	t	s	±0.5 s.

(5) After the system has been connected as shown in Figure 5 of appendix B of this subpart, set the variable restrictor in the wide open position and run the CVS pump for 20 minutes. Record the calibration data.

(6) Reset the restrictor valve to a more restricted condition in an increment of pump inlet depression that will yield a minimum of six data points for the total calibration. Allow the system to stabilize for 3 minutes and repeat the data acquisition.

(7) Data analysis:

(i) The air flow rate, Q_s, at each test point is calculated in standard cubic feet per minute 20 °C, 101.3 kPa from the flowmeter data using the manufacturer's prescribed method.

(ii) The air flow rate is then converted to pump flow, V_o, in cubic meter per revolution at absolute pump inlet temperature and pressure:

$$V_0 = \frac{Q_s}{n} \times \frac{T_P}{293} \times \frac{101.3\text{kPa}}{P_P}$$

Where:

V_O=Pump flow, m^3/rev at T_P, P_P,

Q_S=Meter air flow rate in standard cubic meters per minute, standard conditions are 20 °C, 101.3 kPa.

n=Pump speed in revolutions per minute.

T_p=Pump inlet temperature in Kelvin,=P_{TI}+273 [°K].

P_P=Absolute pump inlet pressure, kPa.

=$P_P - P_{PI}$

Where:

P_P=barometric pressure, kPa.

P_{PI}=Pump inlet depression, kPa.

(iii) The correlation function at each test point is then calculated from the calibration data:

$$X_o = \frac{1}{n}\sqrt{\left(\frac{\Delta p}{P_e}\right)}$$

Where:

X_O=correlation function.

Δ^p = The pressure differential from pump inlet to pump outlet, kPa.

$=P_E - P_P$.

P_E=Absolute pump outlet pressure, [kPa]

$=P_B+P_{PO}$

Where:

P_{PO}=Pressure head at pump outlet, kPa (inches fluid).

(iv) A linear least squares fit is performed to generate the calibration equation which has the form:

$V_O = D_O - M(X_O)$

D_O and M are the intercept and slope constants, respectively, describing the regression line.

(8) A CVS system that has multiple speeds should be calibrated on each speed used. The calibration curves generated for the ranges will be approximately parallel and the intercept values, DO, will increase as the pump flow range decreases.

(9) If the calibration has been performed carefully, the calculated values from the equation will be within ±0.50 percent of the measured value of V_O. Values of *M* will vary from one pump to another, but values of D_O for pumps of the same make, model and range should agree within ±three percent of each other. Calibrations should be performed at pump start-up and after major maintenance to assure the stability of the pump slip rate. Analysis of mass injection data will also reflect pump slip stability.

(d) CFV-CVS calibration. (1) Calibration of the CFV is based upon the flow equation for a critical venturi.

(i) Gas flow is a function of inlet pressure and temperature:

$$Q_s = \frac{K_v P}{\sqrt{T_K}}$$

Q_S=flow rate [m³/min.].

K_V=calibration coefficient.

P=absolute pressure [kPa].

T_K=absolute temperature [°K].

(ii) The calibration procedure described in paragraph (d)(3) of this section establishes the value of the calibration coefficient at measured values of pressure, temperature and air flow.

(2) The manufacturer's recommended procedure shall be followed for calibrating electronic portions of the CFV.

(3) Measurements necessary for flow calibration are as follows:

CALIBRATION DATA MEASUREMENTS

Parameter	Symbol	Units	Tolerances
Barometric Pressure (corrected)	P_B	kPa	±0.34 kPa
Air Temperature into flow meter	T_{EI}	°C	±0.28 °C
Pressure drop between the inlet and throat of metering venturi.	P_{ED}	kPa	±0.012 kPa
Air flow	Q_S	m³/min.	±0.5 percent of NIST value
CVS inlet depression	P_{PI}	kPa	±0.055 kPa
Pressure head at CVS pump outlet	P_{PO}	kPa	±0.055 kPa
Temperature at venturi inlet	T_V	°C	±2.22 °C

(4) Set up equipment as shown in Figure 6 in appendix B of this subpart and eliminate leaks. (Leaks between the flow measuring devices and the critical flow venturi will seriously affect the accuracy of the calibration.)

(5) Set the variable flow restrictor to the open position, start the blower, and allow the system to stabilize. Record data from all instruments.

(6) Vary the flow restrictor and make at least eight readings across the critical flow range of the venturi.

(7) Data analysis. The data recorded during the calibration are to be used in the following calculations:

(i) The air flow rate (designated as Q_s) at each test point is calculated in standard cubic feet per minute from

the flow meter data using the manufacturer's prescribed method.

(ii) Calculate values of the calibration coefficient for each test point:

$$K_v = \frac{Q_s \sqrt{T_v}}{P_v}$$

Q_S=Flow rate in standard cubic meter per minute, at the standard conditions of 20 °C, 101.3 kPa.

T_V=Temperature at venturi inlet, °K.

P_V=Pressure at venturi inlet, kPA

$=P_B - P_{PI}$

Where:

P_{PI} = Venturi inlet pressure depression, kPa.

(iii) Plot K_V as a function of venturi inlet pressure. For choked flow, K_V will have a relatively constant value. As pressure decreases (vacuum increases), the venturi becomes unchoked and K_V decreases. (See Figure 7 in appendix B of this subpart)

(iv) For a minimum of eight points in the critical region calculate an average K_V and the standard deviation.

(v) If the standard deviation exceeds 0.3 percent of the average K_V, take corrective action.

(e) CVS system verification. The following ''gravimetric'' technique can be used to verify that the CVS and analytical instruments can accurately measure a mass of gas that has been injected into the system. (Verification can also be accomplished by constant flow metering using critical flow orifice devices.)

(1) Obtain a small cylinder that has been charged with 99.5 percent or greater propane or carbon monoxide gas (CAUTION—carbon monoxide is poisonous).

(2) Determine a reference cylinder weight to the nearest 0.01 grams.

(3) Operate the CVS in the normal manner and release a quantity of pure propane into the system during the sampling period (approximately five minutes).

(4) The calculations are performed in the normal way except in the case of propane. The density of propane (0.6109 kg/m^{3}carbon atom is used in place of the density of exhaust hydrocarbons.

(5) The gravimetric mass is subtracted from the CVS measured mass and then divided by the gravimetric mass to determine the percent accuracy of the system.

(6) Good engineering practice requires that the cause for any discrepancy greater than ±2 percent must be found and corrected.

§ 91.425 CVS calibration frequency.

Calibrate the CVS positive displacement pump or critical flow venturi following initial installation, major maintenance or as necessary when indicated by the CVS system verification (described in § 91.424(e)).

§ 91.426 Dilute emission sampling calculations.

(a) The final reported emission test results must be computed by use of the following formula:

$$A_{wm} = \frac{\Sigma(W_i \times f_i)}{\Sigma(P_i \times f_i)} \times K_{Hi}$$

Where:

A_{wm}=Weighted mass emission level (HC, CO, CO_2, or NO_X) for a test [g/kW-hr].

W_i=Average mass flow rate of an emission from a test engine during mode i [g/hr].

WF_i = Weighting factor for each mode i as defined in § 91.410(a).

P_i = Gross average power generated during mode i [kW] calculated from the following equation (power for the idle mode shall always be zero for this calculation):

$$P_i = \frac{2\Pi}{60{,}000} \times \text{speed} \times \text{torque}$$

speed = average engine speed measured during mode i [rev./minute]

torque = average engine torque measured during mode i [N-m]

K_{Hi} = Humidity correction factor for mode i. This correction factor only affects calculations for NO_X and is equal to one for all other emissions. K_{Hi} is also equal to one for all two-stroke engines.

(b) The mass flow rate (W_i) of an emission for mode i is determined from the following equation:

$$W_i = Q_i \times D \times \left(C_{Di} - C_{Bi} \times \left(1 - \frac{1}{DF_i} \right) \right)$$

Where:

Q_i = Volumetric flow rate of the dilute exhaust through the CVS at standard conditions [m^3/hr at STP].

D = Density of a specific emission (D_{HC}, D_{CO}, D_{CO2}, D_{NOx}) in the exhaust [g/m³].
DF_i = Dilution factor of the dilute exhaust during mode i.
C_{Di} = Concentration of the emission (HC, CO, NO_X) in the dilute exhaust extracted from the CVS during mode i [ppm].
C_{Bi} = Concentration of the emission (HC, CO, NO_X) in the background sample during mode i [ppm].
STP = Standard temperature and pressure. All volumetric calculations made for the equations in this section are to be corrected to a standard temperature of 20 °C and 101.3 kPa.

(c) Densities for emissions that are to be measured for this test procedure are:

D_{HC} = 576.8 g/m³
DNO_X = 1912 g/m³
D_{CO} = 1164 g/m³
D_{CO2} = 1829 g/m³

(1) The value of D_{HC} above is calculated based on the assumption that the fuel used has a carbon to hydrogen ratio of 1:1.85. For other fuels, D_{HC} can be calculated from the following formula:

$$D_{HC} = \frac{M_{HC}}{R_{STP}}$$

Where:
M_{HC} = Molecular weight of the hydrocarbon molecule divided by the number of carbon atoms in the molecule [g/mole].
R_{STP} = Ideal gas constant for a gas at STP = 0.024065 [m³-mole].

(2) The idealized molecular weight of the exhaust hydrocarbons, ie., the molecular weight of the hydrocarbon molecule divided by the number of carbon atoms in the molecule, M_{HC} can be calculated from the following formula:

$$M_{HC} = M_C + \alpha M_H + \beta M_O$$

Where:
M_C = Molecular weight of carbon = 12.01 [g/mole].
M_H = Molecular weight of hydrogen = 1.008 [g/mole].
α = Hydrogen to carbon ratio of the test fuel.

(3) The value of D_{NOx} above assumes that NO_X in entirely in the form of NO_2.

(d) The dilution factor (DF) is the ratio of the volumetric flow rate of the background air to that of the raw engine exhaust. The following formula is used to determine DF:

$$DF = \frac{13.4}{C_{D_{HC}} + C_{D_{CO}} + C_{D_{CO_2}}}$$

Where:
C_{DHC} = Concentration of HC in the dilute sample [ppm].
C_{DCO} = Concentration of CO in the dilute sample [ppm].
C_{DCO2} = Concentration of CO_2 in the dilute sample [ppm].

(e) The humidity correction factor K_H is an adjustment made to the measured NO_X. This corrects for the sensitivity that a spark-ignition engine has to the humidity of its combustion air. The following formula is used to determine K_H for NO_X calculations:

$$K_H = \frac{1}{1 - 0.0329(H - 10.71)}$$

Where:
H = Absolute humidity of the engine intake air [grams of water per kilogram of dry air].

(f) The absolute humidity of the engine intake air H is calculated using the following formula:

$$H = \frac{6.211\, P_{dew}}{P_B - \left(\frac{P_{dew}}{100}\right)}$$

Where:
P_{dew} = Saturated vapor pressure at the dew point temperature [kPa].
P_b = Barometric pressure [kPa].

(g) The fuel mass flow rate F_i can be either measured or calculated using the following formula:

$$F_i = \frac{M_f}{T}$$

Where:
M_f = Mass of fuel consumed by the engine during the mode [g].
T = Duration of the sampling period [hr].

(h) The mass of fuel consumed during the mode sampling period, M_{FUEL} can be calculated from the following equation:

$$M_f = \frac{G_S}{R_2 \times 273.15}$$

Where:
G_S = Mass of carbon measured during the mode sampling period [g].

R_2 = The fuel carbon weight fraction, which is the mass of carbon in fuel per mass of fuel [g/g].

(i) The grams of carbon measured during the mode G_S can be calculated from the following equation:

$$G_S = \frac{12.011 \times HC_{mass}}{12.011 + 1.008\alpha} + 0.429CO_{mass} + 0.273CO_{2\,mass}$$

Where:

HC_{mass} = mass of hydrocarbon emissions for the mode sampling period [g].

CO_{mass} = mass of carbon monoxide emissions for the mode sampling period [g].

CO_{2mass} = mass of carbon dioxide emissions for the mode sampling period [g].

α = The atomic hydrogen to carbon ratio of the fuel.

§ 91.427 Catalyst thermal stress resistance evaluation.

(a)(1) The purpose of the evaluation procedure specified in this section is to determine the effect of thermal stress on catalyst conversion efficiency. The thermal stress is imposed on the test catalyst by exposing it to quiescent heated air in an oven. The evaluation of the effect of such stress on catalyst performance is based on the resultant degradation of the efficiency with which the conversions of specific pollutants are promoted. The application of this evaluation procedure involves the several steps that are described in the following paragraphs.

(2) The engine manufacturer need not submit catalyst conversion efficiency data for pollutants that the catalyst being tested was not designed to reduce/oxidize. The engine manufacturer must specify the pollutants that the catalyst will be converting and submit catalyst conversion efficiency data on only those pollutants.

(b) Determination of initial conversion efficiency.

(1) A synthetic exhaust gas mixture having the composition specified in § 91.329 is heated to a temperature of 450 ±5 °C and passed through the new test catalyst or, optionally, a test catalyst that has been exposed to temperatures less than or equal to 500 °C for less than or equal to two hours, under flow conditions that are representative of anticipated in-use conditions.

(2) The concentration of each pollutant of interest, that is, hydrocarbons, carbon monoxide, or oxides of nitrogen, in the effluent of the catalyst is determined by means of the instrumentation that is specified for exhaust gas analysis in subpart D of this part.

(3) The conversion efficiency for each pollutant is determined by:

(i) Subtracting the effluent concentration from the initial concentration,

(ii) Dividing this result by the initial concentration,

(iii) Multiplying this result by 100 percent.

(c) Imposition of thermal stress.

(1) The catalyst is placed in an oven that has been pre-heated to 1000 °C and the temperature of the air in the oven is maintained at 1000 ±10 °C for six hours. Optionally, the catalyst may instead be placed in an oven having a 90% nitrogen/10% water vapor environment that has been pre-heated to at least 850 °C and the temperature of the nitrogen/water vapor environment in the oven is maintained at 850 °C ±10 °C for six hours.

(2) The catalyst is removed from the oven and allowed to cool to room temperature.

(d) Determination of final conversion efficiency. The steps listen in paragraph (b) of this section are repeated.

(e) Determination of conversion efficiency degradation.

(1) The final conversion efficiency determined in paragraph (c) of this section is subtracted from the initial conversion efficiency determined in paragraph (b) of this section.

(2) This result is divided by the initial conversion efficiency.

(3) This result is multiplied by 100 percent.

(f) Determination of compliance with degradation limit. The percent degradation determined in paragraph (e) of

this section must not be greater than 20 percent.

APPENDIX A TO SUBPART E OF PART 91—TABLES

TABLE 1—PARAMETERS TO BE MEASURED OR CALCULATED AND RECORDED

Parameter	Units
Airflow rate (dry), if applicable	g/h
Fuel flow rate	g/h
Engine speed	rpm
Engine torque output	N · m
Power output	kW
Air inlet temperature	°C
Air humidity	mg/kg
Coolant temperature (liquid cooled)	°C
Exhaust mixing chamber surface temperature, if applicable.	°C
Exhaust sample line temperature, if applicable	°C
Total accumulated hours of engine operation	h

TABLE 1—PARAMETERS TO BE MEASURED OR CALCULATED AND RECORDED—Continued

Parameter	Units
Barometric pressure	kPa

TABLE 2—TEST CYCLE AND WEIGHTING FACTORS FOR MARINE ENGINES>

Mode No.	Engine speed as a percentage of engine rated speed	Engine torque as a percentage of maximum torque at rated speed	Mode weighting factor
1	100	100	0.06
2	80	71.6	0.14
3	60	46.5	0.15
4	40	25	0.25
5	idle	0	0.40

APPENDIX B TO SUBPART E OF PART 91—FIGURES

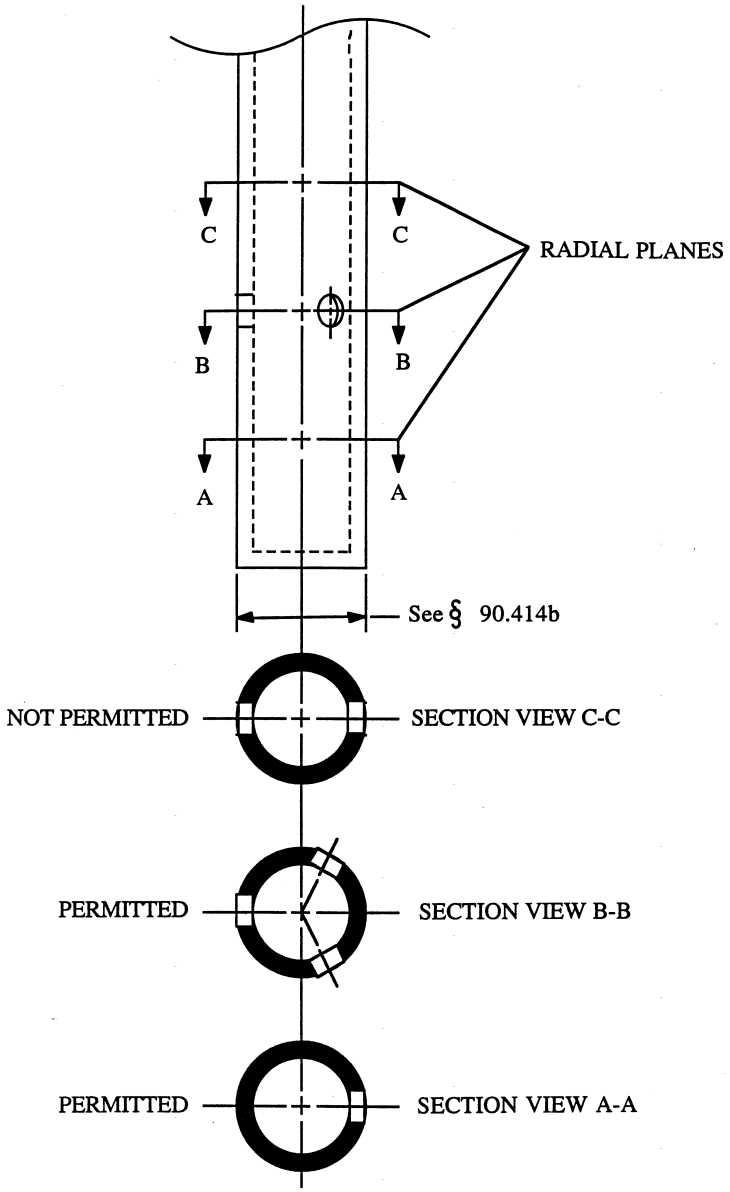

Figure 1.—Sample Probe and Typical Hole Spacings

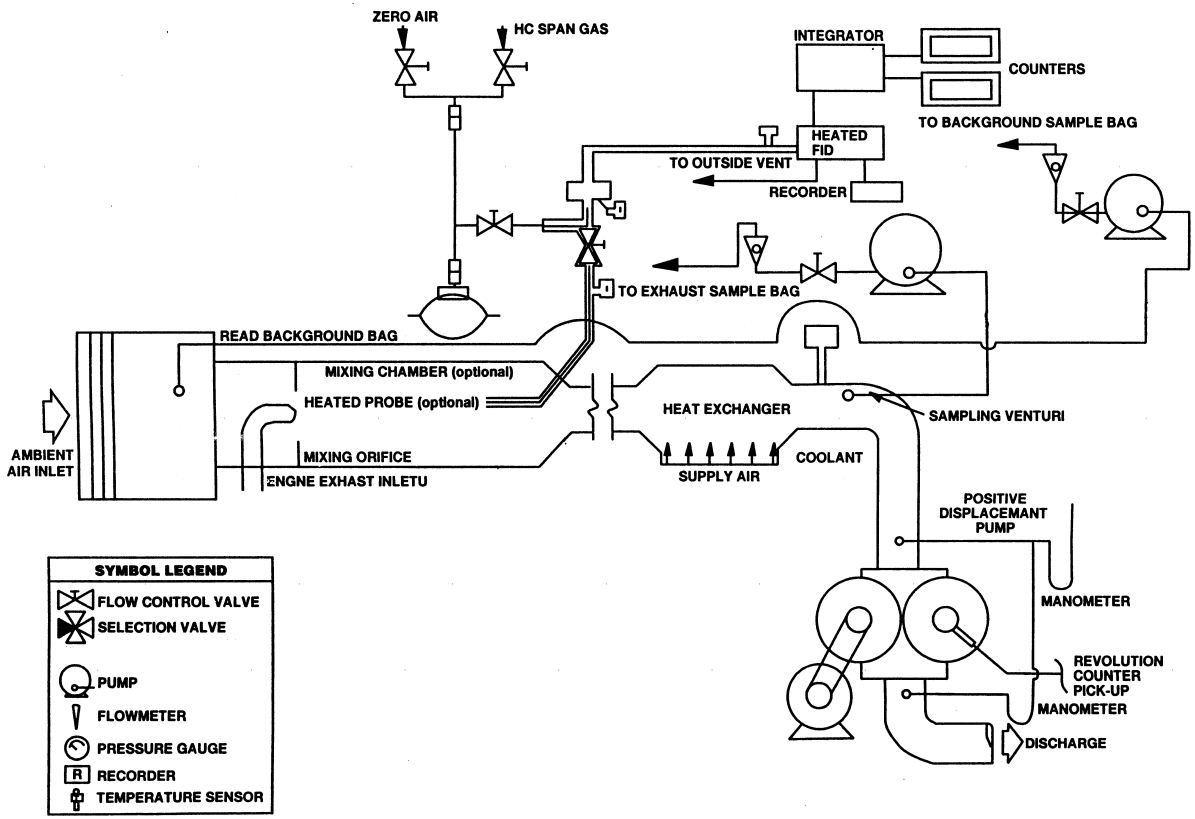

Figure 2 — Gaseous Emissions Sampling System (PDP-CVS) Showing both grab bag sampling and continous sampling

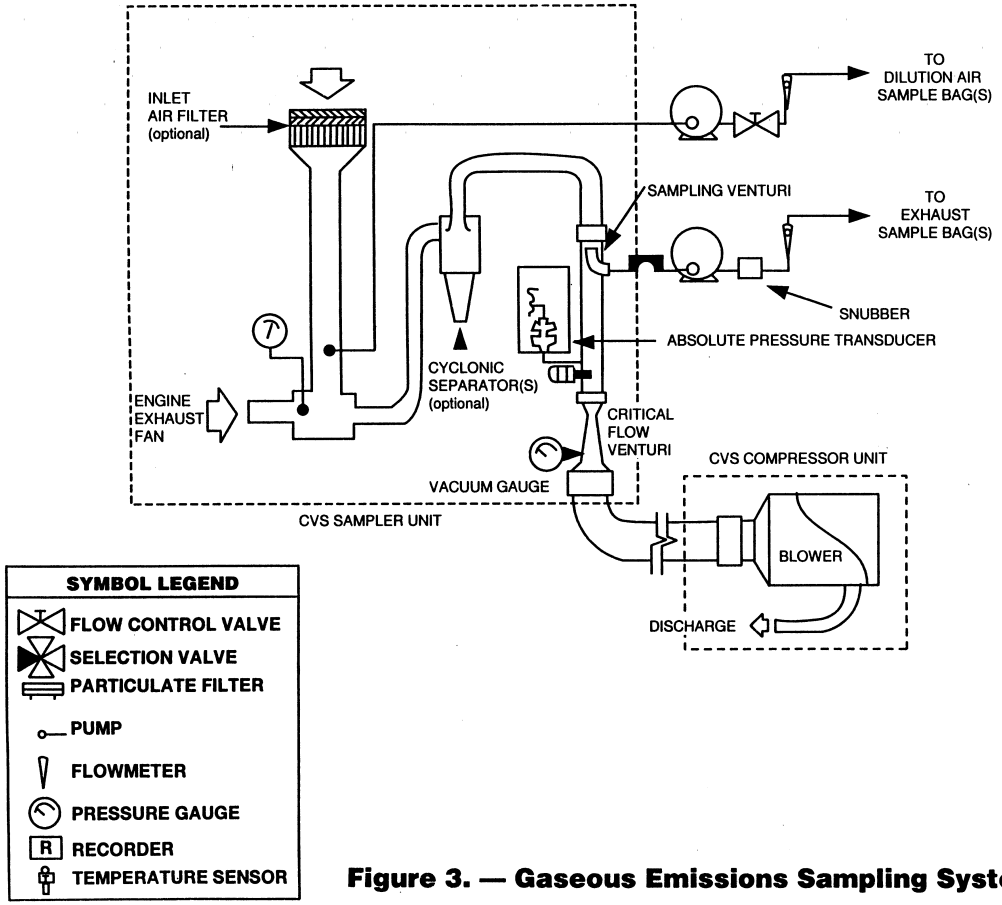

Figure 3. — Gaseous Emissions Sampling System (CVF-CVS)

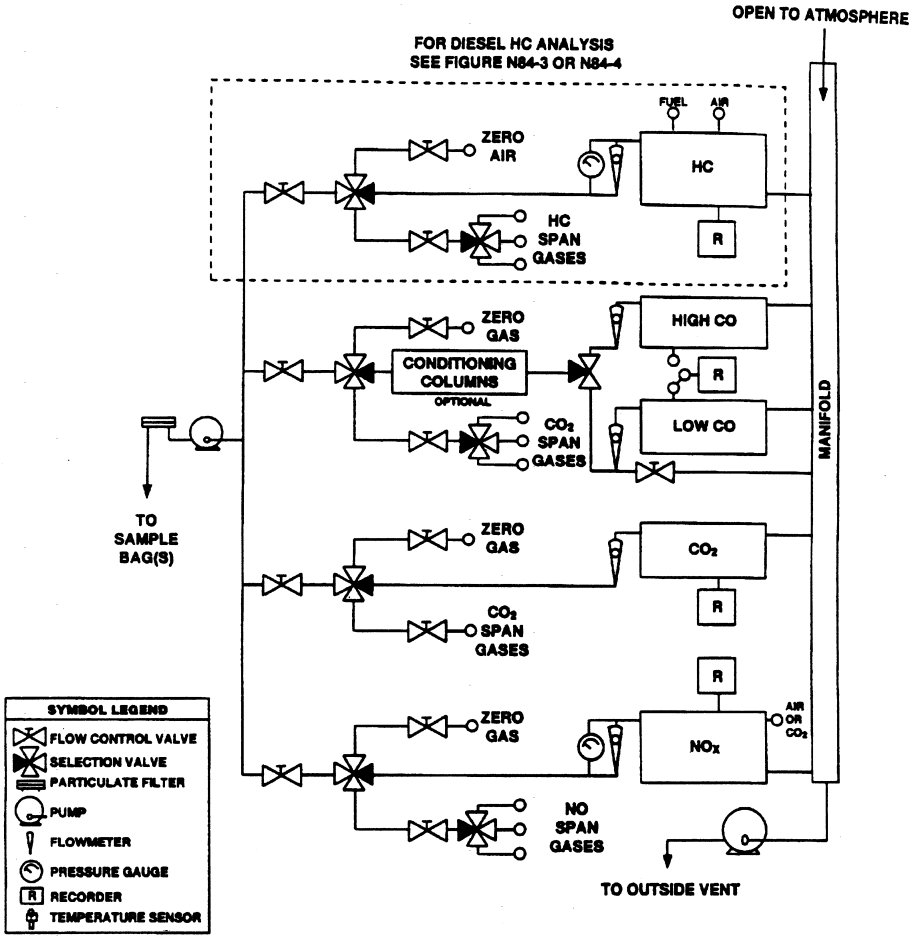

Figure 4. — Exhaust Gas Analytical System

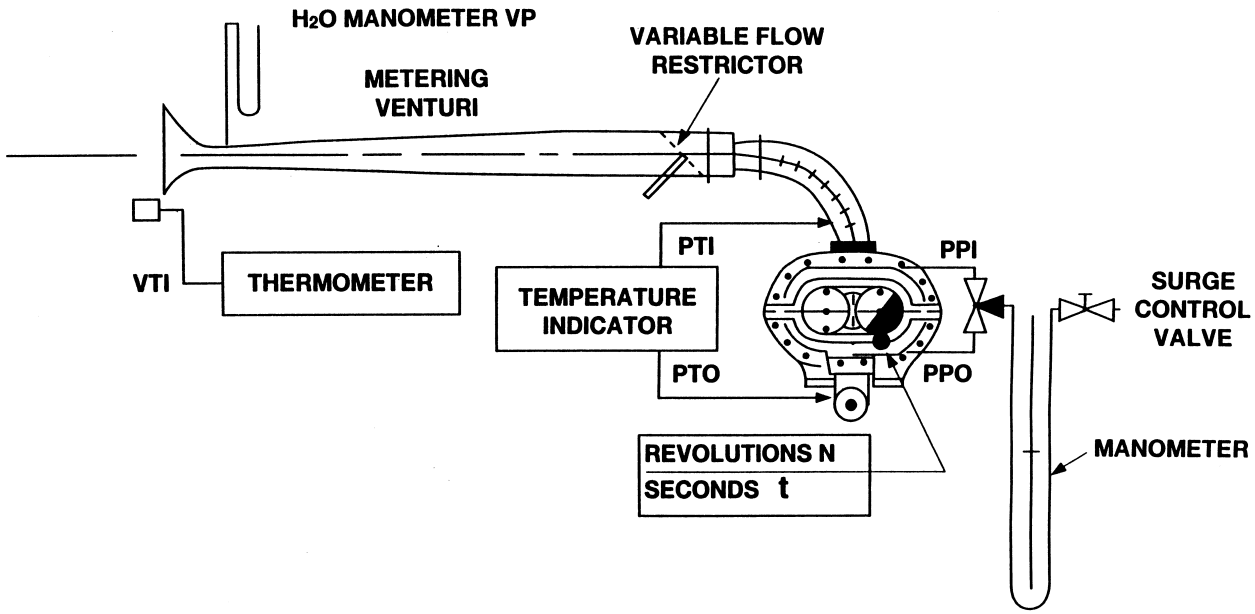

Figure 5. — PDP-CVS Calibration Configuration

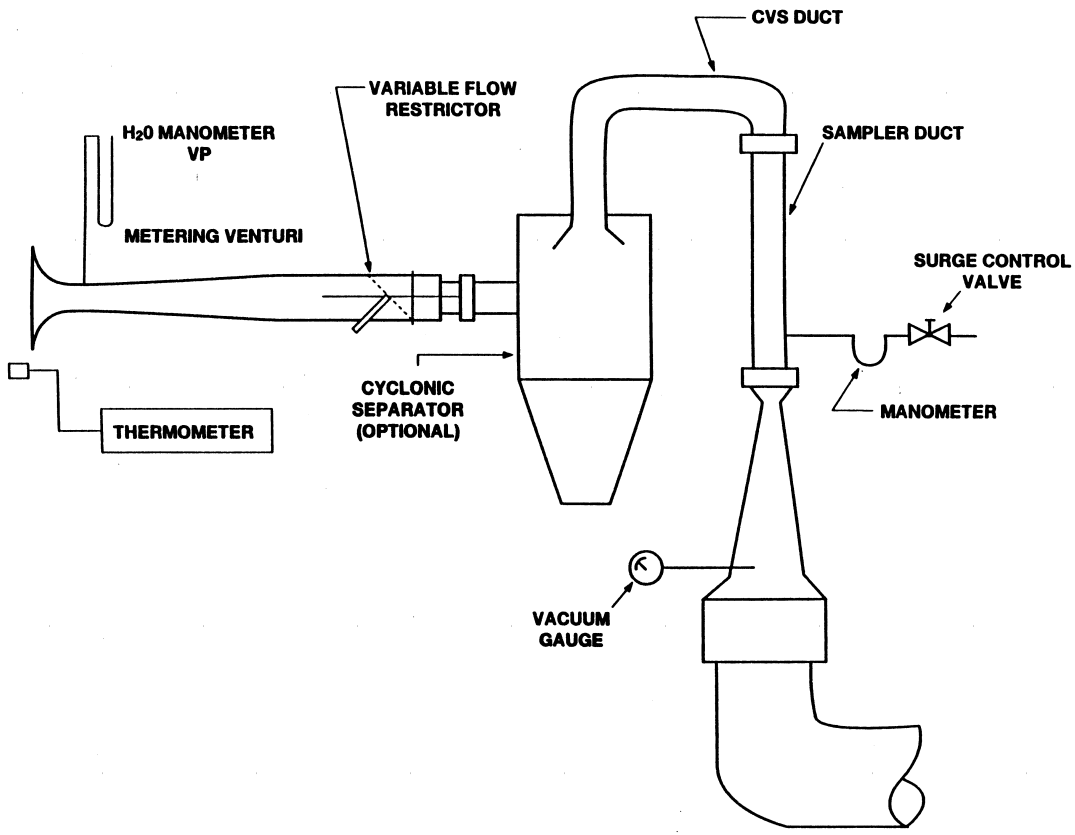

Figure 6. — CFV-CVS Calibration Configuration

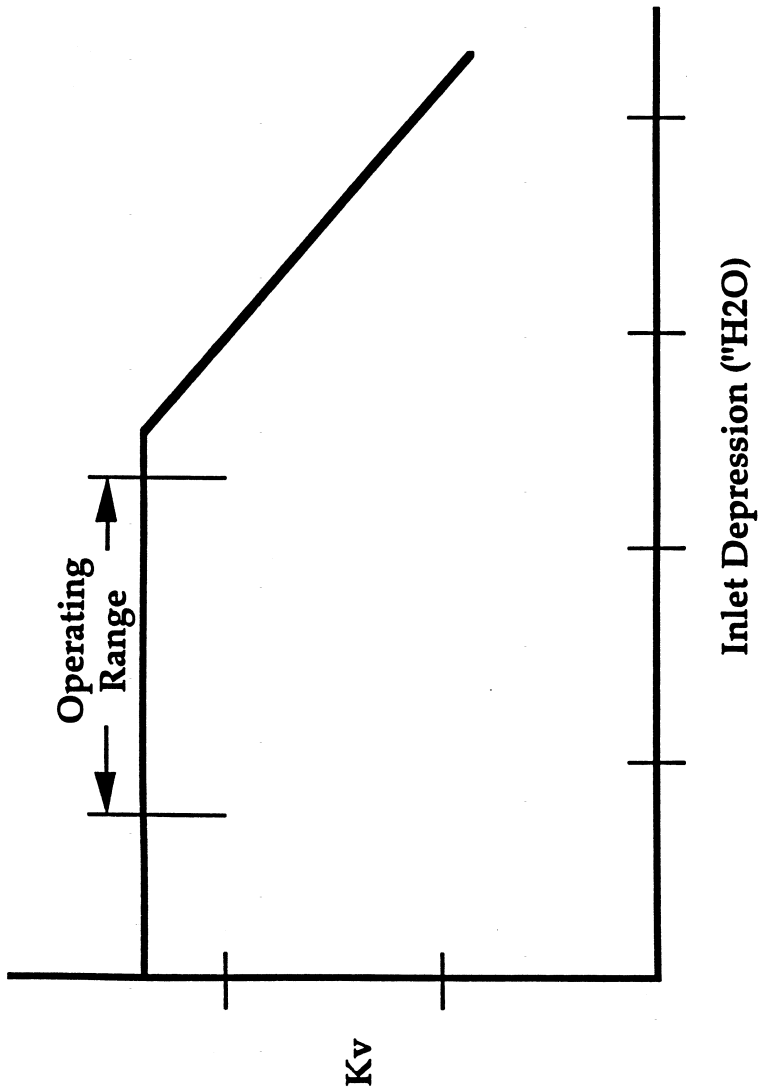

Figure 7.—Sonic Flow Choking

Subpart F—Manufacturer Production Line Testing Program

§ 91.501 Applicability.

(a) The requirements of this subpart F are applicable to all marine spark-ignition engines subject to the provisions of subpart A of this part 91.

(1) This subpart F applies to marine spark-ignition outboard engines beginning with model year 1999.

(2) This subpart F applies to marine spark-ignition personal watercraft engines beginning with model year 2000.

(b) The Administrator may waive the provisions of this subpart for a manufacturer or a specific engine family, as

specified in paragraphs (b) (1), (2) and (3) of this section.

(1) The provisions of this subpart are waived for existing technology OB/PWC through model year 2003.

(2) Upon request by a manufacturer, the Administrator may waive the provisions of this subpart for existing technology OB/PWC for a specific engine family through model year 2005 if the Administrator determines that the engine family will be phased out of production for sale in the U.S. by the end of model year 2005. As a condition to receiving such a waiver for either model year 2004, 2005 or both, the manufacturer must discontinue production of engines for sale in the U.S. according to a schedule determined by the Administrator upon granting this waiver. Failure to do so by the manufacturer will void *ab initio* the applicable certificate of conformity.

(3) A manufacturer request under paragraph (b)(2) of this section must be in writing and apply to a specific engine family. The request must identify the engine family designation, a written rationale supporting the FEL choice, the type of information used as a basis for the FEL (e.g., previous emission tests, development tests), the specific source of the information including when the information was generated, the requested schedule for phasing the engine family out of production, and any other information the Administrator may require.

[61 FR 52102, Oct. 4, 1996, as amended at 62 FR 15808, Apr. 2, 1997]

§ 91.502 Definitions.

The definitions in subpart A of this part apply to this subpart. The following definitions also apply to this subpart.

Configuration means any subclassification of an engine family which can be described on the basis of gross power, emission control system, governed speed, injector size, engine calibration, and other parameters as designated by the Administrator.

Test sample means the collection of engines selected from the population of an engine family for emission testing.

§ 91.503 Production line testing by the manufacturer.

(a) Manufacturers of marine SI engines shall test production line engines from each engine family according to the provisions of this subpart.

(b) Production line engines must be tested using the test procedure specified in subpart E of this part that was used in certification unless an alternate procedure is approved by the Administrator. Any adjustable engine parameter must be set to values or positions that are within the range recommended to the ultimate purchaser, unless otherwise specified by the Administrator. The Administrator may specify values within or without the range recommended to the ultimate purchaser.

§ 91.504 Maintenance of records; submittal of information.

(a) The manufacturer of any new marine SI engine subject to any of the provisions of this subpart must establish, maintain, and retain the following adequately organized and indexed records:

(1) *General records.* A description of all equipment used to test engines in accordance with § 91.503. Subpart D of this part sets forth relevant equipment requirements in §§ 91.306, 91.308, 91.309, and 91.313.

(2) *Individual records.* These records pertain to each production line test conducted pursuant to this subpart and include:

(i) The date, time, and location of each test;

(ii) The number of hours of service accumulated on the test engine when the test began and ended;

(iii) The names of all supervisory personnel involved in the conduct of the production line test;

(iv) A record and description of any adjustment, repair, preparation or modification performed prior to and/or subsequent to approval by the Administrator pursuant to § 91.507(b)(1), giving the date, associated time, justification, name(s) of the authorizing personnel, and names of all supervisory personnel responsible for the conduct of the repair;

(v) If applicable, the date the engine was shipped from the assembly plant,

associated storage facility or port facility, and the date the engine was received at the testing facility;

(vi) A complete record of all emission tests performed pursuant to this subpart (except tests performed directly by EPA), including all individual worksheets and/or other documentation relating to each test, or exact copies thereof, in accordance with the record requirements specified in § 91.405.

(vii) A brief description of any significant events during testing not otherwise described under paragraph (a)(2) of this section, commencing with the test engine selection process and including such extraordinary events as engine damage during shipment.

(3) The manufacturer must establish, maintain and retain general records, pursuant to paragraph (a)(1) of this section, for each test cell that can be used to perform emission testing under this subpart.

(b) The manufacturer must retain all records required to be maintained under this subpart for a period of one year after completion of all testing required for the engine family in a model year. Records may be retained as hard copy (i.e., on paper) or reduced to microfilm, floppy disk, or some other method of data storage, depending upon the manufacturer's record retention procedure; provided, that in every case, all the information contained in the hard copy is retained.

(c) The manufacturer must, upon request by the Administrator, submit the following information with regard to engine production:

(1) Projected production or actual production for each engine configuration within each engine family for which certification has been requested and/or approved,

(2) Number of engines, by configuration and assembly plant, scheduled for production or actually produced.

(d) Nothing in this section limits the Administrator's discretion to require a manufacturer to establish, maintain, retain or submit to EPA information not specified by this section.

(e) All reports, submissions, notifications, and requests for approval made under this subpart must be addressed to: Manager, Engine Compliance Programs Group 6403J, U.S. Environmental Protection Agency, 1200 Pennsylvania Ave., NW., Washington, DC 20460.

(f) The manufacturer must electronically submit the results of its production line testing using an EPA information format. The Administrator may exempt manufacturers from this requirement upon written request with supporting justification.

§ 91.505 Right of entry and access.

(a) To allow the Administrator to determine whether a manufacturer is complying with the provisions of this or other subparts of this part, one or more EPA enforcement officers may enter during operating hours and upon presentation of credentials any of the following places:

(1) Any facility, including ports of entry, where any engine to be introduced into commerce or any emission-related component is manufactured, assembled, or stored;

(2) Any facility where any test conducted pursuant to this or any other subpart or any procedure or activity connected with such test is or was performed;

(3) Any facility where any test engine is present; and

(4) Any facility where any record required under § 91.504 or other document relating to this subpart or any other subpart of this part is located.

(b) Upon admission to any facility referred to in paragraph (a) of this section, EPA enforcement officers are authorized to perform the following inspection-related activities:

(1) To inspect and monitor any aspect of engine manufacture, assembly, storage, testing and other procedures, and to inspect and monitor the facilities in which these procedures are conducted;

(2) To inspect and monitor any aspect of engine test procedures or activities, including test engine selection, preparation and service accumulation, emission test cycles, and maintenance and verification of test equipment calibration;

(3) To inspect and make copies of any records or documents related to the assembly, storage, selection, and testing of an engine; and

(4) To inspect and photograph any part or aspect of any engine and any

component used in the assembly thereof that is reasonably related to the purpose of the entry.

(c) EPA enforcement officers are authorized to obtain reasonable assistance without cost from those in charge of a facility to help the officers perform any function listed in this subpart and they are authorized to request the manufacturer to make arrangements with those in charge of a facility operated for the manufacturer's benefit to furnish reasonable assistance without cost to EPA.

(1) Reasonable assistance includes, but is not limited to, clerical, copying, interpretation and translation services; the making available on an EPA enforcement officer's request of personnel of the facility being inspected during their working hours to inform the EPA enforcement officer of how the facility operates and to answer the officer's questions; and the performance on request of emission tests on any engine which is being, has been, or will be used for production line or other testing.

(2) By written request, signed by the Assistant Administrator for Air and Radiation, and served on the manufacturer, a manufacturer may be compelled to cause the personal appearance of any employee at such a facility before an EPA enforcement officer. Any such employee who has been instructed by the manufacturer to appear will be entitled to be accompanied, represented, and advised by counsel.

(d) EPA enforcement officers are authorized to seek a warrant or court order authorizing the EPA enforcement officers to conduct the activities authorized in this section, as appropriate, to execute the functions specified in this section. EPA enforcement officers may proceed *ex parte* to obtain a warrant or court order whether or not the EPA enforcement officers first attempted to seek permission from the manufacturer or the party in charge of the facility(ies) in question to conduct the activities authorized in this section.

(e) A manufacturer must permit an EPA enforcement officer(s) who presents a warrant or court order to conduct the activities authorized in this section as described in the warrant or court order. The manufacturer must also cause those in charge of its facility or a facility operated for its benefit to permit entry and access as authorized in this section pursuant to a warrant or court order whether or not the manufacturer controls the facility. In the absence of a warrant or court order, an EPA enforcement officer(s) may conduct the activities authorized in this section only upon the consent of the manufacturer or the party in charge of the facility(ies) in question.

(f) It is not a violation of this part or the Clean Air Act for any person to refuse to permit an EPA enforcement officer(s) to conduct the activities authorized in this section if the officer(s) appears without a warrant or court order.

(g) A manufacturer is responsible for locating its foreign testing and manufacturing facilities in jurisdictions where local law does not prohibit an EPA enforcement officer(s) from conducting the entry and access activities specified in this section. EPA will not attempt to make any inspections which it has been informed local foreign law prohibits.

§91.506 Engine sample selection.

(a) At the start of each model year, the marine SI engine manufacturer will begin to randomly select engines from each engine family for production line testing at a rate of one percent. Each engine will be selected from the end of the assembly line.

(1) *For newly certified engine families:* After two engines are tested, the manufacturer will calculate the required sample size for the model year according to the Sample Size Equation in paragraph (b) of this section.

(2) *For carry-over engine families:* After one engine is tested, the manufacturer will combine the test with the last test result from the previous model year and then calculate the required sample size for the model year according to the Sample Size Equation in paragraph (b) of this section.

(b)(1) Manufacturers will calculate the required sample size for the model year for each engine family using the Sample Size Equation below. N is calculated from each test result. The number N indicates the number of tests

required for the model year for an engine family. N, is recalculated after each test. Test results used to calculate the variables in the Sample Size Equation must be final deteriorated test results as specified in § 91.509(c).

$$N = \left[\frac{(t_{95} * \sigma)}{(x - FEL)} \right]^2 + 1$$

where:

N=required sample size for the model year.

t_{95}=95% confidence coefficient. It is dependent on the actual number of tests completed, n, as specified in the table in paragraph (b)(2) of this section. It defines one-tail, 95 percent confidence intervals.

σ=actual test sample standard deviation calculated from the following equation:

$$\sigma = \sqrt{\frac{\Sigma(X_i - x)^2}{n - 1}}$$

x_i=emission test result for an individual engine

x=mean of emission test results of the actual sample

FEL=Family Emission Limit

n=The actual number of tests completed in an engine family

(2) Actual Number of Tests (n) & 1-tail Confidence Coefficients (t_{95})

n	t_{95}	n	t_{95}	n	t_{95}
2	6.31	12	1.80	22	1.72
3	2.92	13	1.78	23	1.72
4	2.35	14	1.77	24	1.71
5	2.13	15	1.76	25	1.71
6	2.02	16	1.75	26	1.71
7	1.94	17	1.75	27	1.71
8	1.90	18	1.74	28	1.70
9	1.86	19	1.73	29	1.70
10	1.83	20	1.73	30	1.70
11	1.81	21	1.72	∞	1.645

(3) A manufacturer must distribute the testing of the remaining number of engines needed to meet the required sample size N, evenly throughout the remainder of the model year.

(4) After each new test, the required sample size, N, is recalculated using updated sample means, sample standard deviations and the appropriate 95% confidence coefficient.

(5) A manufacturer must continue testing and updating each engine family's sample size calculations according to paragraphs (b)(1) through (b)(4) of this section until a decision is made to stop testing as described in paragraph (b)(6) of this section or a noncompliance decision is made pursuant to § 91.510(b).

(6) If, at any time throughout the model year, the calculated required sample size, N, for an engine family is less than or equal to the actual sample size, n, and the sample mean, x, for $HC+NO_X$ is less than or equal to the FEL, the manufacturer may stop testing that engine family.

(7) If, at any time throughout the model year, the sample mean, x, for $HC+NO_X$ is greater than the FEL, the manufacturer must continue testing that engine family at the appropriate maximum sampling rate.

(8) The maximum required sample size for an engine family (regardless of the required sample size, N, as calculated in paragraph (b)(1) of this section) is the lesser of thirty tests per model year or one percent of projected annual production for that engine family for that model year.

(9) Manufacturers may elect to test additional randomly chosen engines. All additional randomly chosen engines tested in accordance with the testing procedures specified in § 91.507 must be included in the Sample Size and Cumulative Sum equation calculations as defined in paragraph (b)(1) of this section and § 91.508(a), respectively.

(c) The manufacturer must produce and assemble the test engines using its normal production and assembly process for engines to be distributed into commerce.

(d) No quality control, testing, or assembly procedures will be used on any test engine or any portion thereof, including parts and subassemblies, that have not been or will not be used during the production and assembly of all other engines of that family, unless the Administrator approves the modification in production or assembly procedures.

§ 91.507 Test procedures.

(a)(1) For marine SI engines subject to the provisions of this subpart, the prescribed test procedures are specified in subpart E of this part.

(2) The Administrator may, on the basis of a written application by a

manufacturer, prescribe test procedures other than those specified in paragraph (a)(1) of this section for any marine engine he or she determines is not susceptible to satisfactory testing using procedures specified in paragraph (a)(1) of this section.

(b)(1) The manufacturer may not adjust, repair, prepare, or modify any test engine and may not perform any emission test on any test engine unless this adjustment, repair, preparation, modification and/or test is documented in the manufacturer's engine assembly and inspection procedures and is actually performed by the manufacturer or unless this adjustment, repair, preparation, modification and/or test is required or permitted under this subpart or is approved in advance by the Administrator.

(2) The Administrator may adjust or require to be adjusted any engine parameter which the Administrator has determined to be subject to adjustment for certification, production line testing and Selective Enforcement Audit testing, to any setting within the physically adjustable range of that parameter, as determined by the Administrator, prior to the performance of any test. However, if the idle speed parameter is one which the Administrator has determined to be subject to adjustment, the Administrator may not adjust it or require that it be adjusted to any setting which causes a lower engine idle speed than would have been possible within the physically adjustable range of the idle speed parameter if the manufacturer had accumulated 12 hours of service on the engine under paragraph (c) of this section, all other parameters being identically adjusted for the purpose of the comparison. The manufacturer may be requested to supply information necessary to establish an alternate minimum idle speed. The Administrator, in making or specifying these adjustments, may consider the effect of the deviation from the manufacturer's recommended setting on emission performance characteristics as well as the likelihood that similar settings will occur on in-use engines. In determining likelihood, the Administrator may consider factors such as, but not limited to, the effect of the adjustment on engine performance characteristics and information from similar in-use engines.

(c) Service accumulation. (1) Prior to performing exhaust emission production line testing, the manufacturer may accumulate on each test engine a number of hours of service equal to the greater of 12 hours or the number of hours the manufacturer accumulated during certification on the emission data engine for each engine family.

(2) Service accumulation must be performed in a manner using good engineering judgment to obtain emission results representative of production line engines.

(d) The manufacturer may not perform any maintenance on test engines after selection for testing.

(e) If an engine is shipped to a remote facility for production line testing, and an adjustment or repair is necessary because of shipment, the engine manufacturer must perform the necessary adjustment or repair only after the initial test of the engine, except in cases where the Administrator has determined that the test would be impossible or unsafe to perform or would permanently damage the engine. Engine manufacturers must report to the Administrator, in the quarterly report required by §91.509(e), all adjustments or repairs performed on test engines prior to each test.

(f) If an engine cannot complete the service accumulation or an emission test because of a malfunction, the manufacturer may request that the Administrator authorize either the repair of that engine or its deletion from the test sequence.

(g) *Testing.* A manufacturer must test engines with the test procedure specified in subpart E of this part to demonstrate compliance with the applicable FEL. If alternate procedures were used in certification, then those alternate procedures must be used in production line testing.

(h) *Retesting.* (1) If an engine manufacturer reasonably determines that an emission test of an engine is invalid, the engine may be retested. Emission results from all tests must be reported to EPA. The engine manufacturer must also include a detailed explanation of the reasons for invalidating any test in the quarterly report required in

§ 91.509(e). In the event a retest is performed, a request may be made to the Administrator, within ten days of the end of the production quarter, for permission to substitute the after-repair test results for the original test results. The Administrator will either affirm or deny the request by the engine manufacturer within ten working days from receipt of the request.

§ 91.508 Cumulative Sum (CumSum) procedure.

(a) Manufacturers must construct the following CumSum Equation for $HC+NO_X$ for each engine family. Test results used to calculate the variables in the CumSum Equation must be final deteriorated test results as defined in § 91.509(c).

$$C_i = \max[0\ 0R\ (C_{i-1} + X_i - (FEL + F))]$$

Where:

C_i = The current CumSum statistic

C_{i-1} = The previous CumSum statistic. Prior to any testing, the CumSum statistic = 0 (i.e. $C_0 = 0$)

X_i = The current emission test result for an individual engine

FEL = Family Emission Limit

$F = 0.25 \times \sigma$

After each test, C_i is compared to the action limit, H, the quantity which the CumSum statistic must exceed, in two consecutive tests, before the engine family may be determined to be in noncompliance for purposes of § 91.510.

H = The Action Limit. It is $5.0 \times \sigma$, and is a function of the standard deviation, σ.

σ = is the sample standard deviation and is recalculated after each test.

(b) After each engine is tested, the CumSum statistic shall be promptly updated according to the CumSum Equation in paragraph (a) of this section.

(c)(1) If, at any time during the model year, a manufacturer amends the application for certification for an engine family as specified in paragraph (a) of § 91.122 by performing an engine family modification (i.e. a change such as a running change involving a physical modification to an engine, a change in specification or setting, the addition of a new configuration, or the use of a different deterioration factor) with no changes to the FEL, all previous sample size and CumSum statistic calculations for the model year will remain unchanged.

(2) If, at any time during the model year, a manufacturer amends the application for certification for an engine family as specified in paragraph (a) of § 91.122 by modifying its FEL as a result of an engine family modification, the manufacturer must continue its calculations by inserting the new FEL into the sample size equation as specified in § 91.506(b)(1) and into the CumSum equation in paragraph (a) of this section. All previous calculations remain unchanged. If the sample size calculation indicates that additional tests are required, then those tests must be performed. The CumSum statistic recalculation must not indicate that the family has exceeded the action limit for two consecutive tests. The manufacturer's final credit report as required by § 91.210 must break out the credits that result from each FEL and corresponding CumSum analysis for each FEL set.

(3) If, at any time during the model year, a manufacturer amends the application for certification for an engine family as specified in paragraph (a) of § 91.122 by modifying its FEL without performing an engine modification, all previous sample size and CumSum statistic calculations for the model year must be recalculated using the new FEL. If the sample size calculation indicates that additional tests are required, then those tests must be performed. The CumSum statistic recalculation must not indicate that the family has exceeded the action limit for two consecutive tests.

(4) If, at any time after the end of the model year but prior to the manufacturer's final credit report submittal as specified in § 91.210, a manufacturer changes an FEL for an entire family, or for an affected part of the year's production, as specified in paragraph (a) of § 91.122, in cases where there were one or more mid-year engine family modifications, all previous sample size and CumSum statistic calculations for the model year, or part of the model year affected by an engine family change, must be recalculated using the new FEL. The sample size equation must not indicate a larger number of

tests than were appropriately performed using the previous FEL and the CumSum statistic recalculation must not exceed the action limit in two consecutive tests. The manufacturer's final credit report as required by §91.210 must break out the credits that result from each FEL and corresponding CumSum analysis for each FEL set.

§91.509 Calculation and reporting of test results.

(a) Initial test results are calculated following the applicable test procedure specified in paragraph (a) of §91.507. The manufacturer rounds these results, in accordance with ASTM E29–93a, to the number of decimal places contained in the applicable emission standard expressed to one additional significant figure. (ASTM E29–93a has been incorporated by reference. See §91.6.)

(b) Final test results are calculated by summing the initial test results derived in paragraph (a) of this section for each test engine, dividing by the number of tests conducted on the engine, and rounding in accordance with ASTM E29–93a to the same number of decimal places contained in the applicable standard expressed to one additional significant figure.

(c) The final deteriorated test results for each test engine are calculated by applying the appropriate deterioration factors, derived in the certification process for the engine family, to the final test results, and rounding in accordance with ASTM E29–93a to the same number of decimal places contained in the applicable standard expressed to one additional significant figure.

(d) If, at any time during the model year, the CumSum statistic exceeds the applicable action limit, H, in two consecutive tests, the engine family may be determined to be in noncompliance and the manufacturer must notify EPA within two working days of such exceedance by the CumSum statistic.

(e) Within 30 calendar days of the end of each quarter, each engine manufacturer must submit to the Administrator a report which includes the following information:

(1) The location and description of the manufacturer's or other's exhaust emission test facilities which were utilized to conduct testing reported pursuant to this section;

(2) Total production and sample sizes, N and n, for each engine family;

(3) The FEL against which each engine family was tested;

(4) A description of the process to obtain engines on a random basis;

(5) A description of the test engines;

(6) For each test conducted,

(i) A description of the test engine, including:

(A) Configuration and engine family identification,

(B) Year, make, and build date,

(C) Engine identification number, and

(D) Number of hours of service accumulated on engine prior to testing;

(ii) Location where service accumulation was conducted and description of accumulation procedure and schedule;

(iii) Test number, date, test procedure used, initial test results before and after rounding, and final test results for all exhaust emission tests, whether valid or invalid, and the reason for invalidation, if applicable;

(iv) A complete description of any adjustment, modification, repair, preparation, maintenance, and/or testing which was performed on the test engine, was not reported pursuant to any other paragraph of this subpart, and will not be performed on all other production engines;

(v) A CumSum analysis, as required in §91.508, of the production line test results for each engine family;

(vi) Any other information the Administrator may request relevant to the determination whether the new engines being manufactured by the manufacturer do in fact conform with the regulations with respect to which the certificate of conformity was issued;

(7) For each failed engine as defined in §91.510(a), a description of the remedy and test results for all retests as required by §91.511(g);

(8) The date of the end of the engine manufacturer's model year production for each engine family; and

(9) The following signed statement and endorsement by an authorized representative of the manufacturer:

This report is submitted pursuant to sections 213 and 208 of the Clean Air Act. This production line testing program was conducted in complete conformance with all applicable regulations under 40 CFR part 91 *et seq*. No emission-related changes to production processes or quality control procedures for the engine family tested have been made during this production line testing program that affect engines from the production line. All data and information reported herein is, to the best of (Company Name) knowledge, true and accurate. I am aware of the penalties associated with violations of the Clean Air Act and the regulations thereunder. (Authorized Company Representative.)

§ 91.510 Compliance with criteria for production line testing.

(a) A failed engine is one whose final deteriorated test results pursuant to § 91.509(c), for HC + NO_X exceeds the applicable Family Emission Limit (FEL).

(b) An engine family may be determined to be in noncompliance, if at any time throughout the model year, the CumSum statistic, C_i, for HC+NO_X. is greater than the action limit, H, for two consecutive tests.

§ 91.511 Suspension and revocation of certificates of conformity.

(a) The certificate of conformity is automatically suspended with respect to any engine failing pursuant to paragraph (a) of § 91.510 effective from the time that testing of that engine is completed.

(b) The Administrator may suspend the certificate of conformity for an engine family which is determined to be in noncompliance pursuant to § 90.510(b). This suspension will not occur before fifteen days after the engine family is determined to be in noncompliance.

(c) If the results of testing pursuant to these regulations indicate that engines of a particular family produced at one plant of a manufacturer do not conform to the regulations with respect to which the certificate of conformity was issued, the Administrator may suspend the certificate of conformity with respect to that family for engines manufactured by the manufacturer at all other plants.

(d) Notwithstanding the fact that engines described in the application for certification may be covered by a certificate of conformity, the Administrator may suspend such certificate immediately in whole or in part if the Administrator finds any one of the following infractions to be substantial:

(1) The manufacturer refuses to comply with any of the requirements of this subpart.

(2) The manufacturer submits false or incomplete information in any report or information provided to the Administrator under this subpart.

(3) The manufacturer renders inaccurate any test data submitted under this subpart.

(4) An EPA enforcement officer is denied the opportunity to conduct activities authorized in this subpart and a warrant or court order is presented to the manufacturer or the party in charge of the facility in question.

(5) An EPA enforcement officer is unable to conduct activities authorized in § 91.505 because a manufacturer has located its facility in a foreign jurisdiction where local law prohibits those activities.

(e) The Administrator shall notify the manufacturer in writing of any suspension or revocation of a certificate of conformity in whole or in part. A suspension or revocation is effective upon receipt of the notification or fifteen days from the time an engine family is determined to be in noncompliance pursuant to § 91.510(b), whichever is later, except that the certificate is immediately suspended with respect to any failed engines as provided for in paragraph (a) of this section.

(f) The Administrator may revoke a certificate of conformity for an engine family after the certificate has been suspended pursuant to paragraph (b) or (c) of this section if the proposed remedy for the nonconformity, as reported by the manufacturer to the Administrator, is one requiring a design change or changes to the engine and/or emission control system as described in the application for certification of the affected engine family.

(g) Once a certificate has been suspended for a failed engine, as provided for in paragraph (a) of this section, the manufacturer must take the following actions before the certificate is reinstated for that failed engine:

(1) Remedy the nonconformity;

(2) Demonstrate that the engine conforms to the Family Emission Limit by retesting the engine in accordance with these regulations; and

(3) Submit a written report to the Administrator, after successful completion of testing on the failed engine, which contains a description of the remedy and test results for each engine in addition to other information that may be required by this part.

(h) Once a certificate for a failed engine family has been suspended pursuant to paragraph (b), (c) or (d) of this section, the manufacturer must take the following actions before the Administrator will consider reinstating the certificate:

(1) Submit a written report to the Administrator which identifies the reason for the noncompliance of the engines, describes the proposed remedy, including a description of any proposed quality control and/or quality assurance measures to be taken by the manufacturer to prevent future occurrences of the problem, and states the date on which the remedies will be implemented.

(2) Demonstrate that the engine family for which the certificate of conformity has been suspended does in fact comply with the regulations of this part by testing as many engines as needed so that the CumSum statistic, as calculated in §91.508(a), falls below the action limit. Such testing must comply with the provisions of this part. If the manufacturer elects to continue testing individual engines after suspension of a certificate, the certificate is reinstated for any engine actually determined to be in conformance with the Family Emission Limits through testing in accordance with the applicable test procedures, provided that the Administrator has not revoked the certificate pursuant to paragraph (f) of this section.

(i) Once the certificate has been revoked for an engine family, if the manufacturer desires to continue introduction into commerce of a modified version of that family, the following actions must be taken before the Administrator may issue a certificate for that modified family:

(1) If the Administrator determines that the proposed change(s) in engine design may have an effect on emission performance deterioration, the Administrator shall notify the manufacturer, within five working days after receipt of the report in paragraph (h)(1) of this section, whether subsequent testing under this subpart will be sufficient to evaluate the proposed change or changes or whether additional testing will be required; and

(2) After implementing the change or changes intended to remedy the nonconformity, the manufacturer must demonstrate that the modified engine family does in fact conform with the regulations of this part by testing as many engines as needed from the modified engine family so that the CumSum statistic, as calculated in §91.508(a) using the newly assigned FEL if applicable, falls below the action limit. When both of these requirements are met, the Administrator shall reissue the certificate or issue a new certificate, as the case may be, to include that family. As long as the CumSum statistic remains above the action limit, the revocation remains in effect.

(j) At any time subsequent to a suspension of a certificate of conformity for a test engine pursuant to paragraph (a) of this section, but not later than 15 days (or such other period as may be allowed by the Administrator) after notification of the Administrator's decision to suspend or revoke a certificate of conformity in whole or in part pursuant to paragraphs (b), (c), or (f) of this section, a manufacturer may request a hearing as to whether the tests have been properly conducted or any sampling methods have been properly applied.

(k) Any suspension of a certificate of conformity under paragraph (d) of this section:

(1) Shall be made only after the manufacturer concerned has been offered an opportunity for a hearing conducted in accordance with §§91.512, 91.513, and 91.514 and

(2) Need not apply to engines no longer in the possession of the manufacturer.

(l) After the Administrator suspends or revokes a certificate of conformity pursuant to this section and prior to the commencement of a hearing under

§ 91.512, if the manufacturer demonstrates to the Administrator's satisfaction that the decision to suspend or revoke the certificate was based on erroneous information, the Administrator shall reinstate the certificate.

(m) To permit a manufacturer to avoid storing non-test engines while conducting subsequent testing of the noncomplying family, a manufacturer may request that the Administrator conditionally reinstate the certificate for that family. The Administrator may reinstate the certificate subject to the following condition: the manufacturer must commit to recall all engines of that family produced from the time the certificate is conditionally reinstated if the CumSum statistic does not fall below the action limit and must commit to remedy any nonconformity at no expense to the owner.

§ 91.512 Request for public hearing.

(a) If the manufacturer disagrees with the Administrator's decision to suspend or revoke a certificate or disputes the basis for an automatic suspension pursuant to § 91.511(a), the manufacturer may request a public hearing.

(b) The manufacturer's request shall be filed with the Administrator not later than 15 days after the Administrator's notification of his or her decision to suspend or revoke, unless otherwise specified by the Administrator. The manufacturer shall simultaneously serve two copies of this request upon the Manager of the Engine Compliance Programs Group and file two copies with the Hearing Clerk for the Agency. Failure of the manufacturer to request a hearing within the time provided constitutes a waiver of the right to a hearing. Subsequent to the expiration of the period for requesting a hearing as of right, the Administrator may, in his or her discretion and for good cause shown, grant the manufacturer a hearing to contest the suspension or revocation.

(c) A manufacturer shall include in the request for a public hearing:

(1) A statement as to which engine configuration(s) within a family is to be the subject of the hearing;

(2) A concise statement of the issues to be raised by the manufacturer at the hearing, except that in the case of the hearing requested under § 91.511(j), the hearing is restricted to the following issues:

(i) Whether tests have been properly conducted (specifically, whether the tests were conducted in accordance with applicable regulations under this part and whether test equipment was properly calibrated and functioning);

(ii) Whether sampling plans and statistical analyses have been properly applied (specifically, whether sampling procedures and statistical analyses specified in this subpart were followed and whether there exists a basis for distinguishing engines produced at plants other than the one from which engines were selected for testing which would invalidate the Administrator's decision under § 91.511(c));

(3) A statement specifying reasons why the manufacturer believes it will prevail on the merits of each of the issues raised; and

(4) A summary of the evidence which supports the manufacturer's position on each of the issues raised.

(d) A copy of all requests for public hearings will be kept on file in the Office of the Hearing Clerk and will be made available to the public during Agency business hours.

§ 91.513 Administrative procedures for public hearing.

(a) The Presiding Officer shall be an Administrative Law Judge appointed pursuant to 5 U.S.C. 3105 (see also 5 CFR part 930 as amended).

(b) The Judicial Officer shall be an officer or employee of the Agency appointed as a Judicial Officer by the Administrator, pursuant to this section, who shall meet the qualifications and perform functions as follows:

(1) *Qualifications.* A Judicial Officer may be a permanent or temporary employee of the Agency who performs other duties for the Agency. The Judicial Officer shall not be employed by the Office of Enforcement and Compliance Assurance or have any connection with the preparation or presentation of evidence for a hearing held pursuant to this subpart. The Judicial Officer shall be a graduate of an accredited law school and a member in good standing

of a recognized Bar Association of any state or the District of Columbia.

(2) *Functions.* The Administrator may consult with the Judicial Officer or delegate all or part of the Administrator's authority to act in a given case under this section to a Judicial Officer, provided that this delegation does not preclude the Judicial Officer from referring any motion or case to the Administrator when the Judicial Officer determines such referral to be appropriate.

(c) For the purposes of this section, one or more Judicial Officers may be designated by the Administrator. As work requires, a Judicial Officer may be designated to act for the purposes of a particular case.

(d) Summary decision. (1) In the case of a hearing requested under §91.511(j), when it clearly appears from the data and other information contained in the request for a hearing that no genuine and substantial question of fact or law exists with respect to the issues specified in §91.512(c)(2), the Administrator may enter an order denying the request for a hearing and reaffirming the original decision to suspend or revoke a certificate of conformity.

(2) In the case of a hearing requested under §91.512 to challenge a suspension of a certificate of conformity for the reason(s) specified in §91.511(d), when it clearly appears from the data and other information contained in the request for the hearing that no genuine and substantial question of fact or law exists with respect to the issue of whether the refusal to comply with this subpart was caused by conditions and circumstances outside the control of the manufacturer, the Administrator may enter an order denying the request for a hearing and suspending the certificate of conformity.

(3) Any order issued under paragraph (d)(1) or (d)(2) of this section has the force and effect of a final decision of the Administrator, as issued pursuant to §91.515.

(4) If the Administrator determines that a genuine and substantial question of fact or law does exist with respect to any of the issues referred to in paragraphs (d)(1) and (d)(2) of this section, the Administrator shall grant the request for a hearing and publish a notice of public hearing in the FEDERAL REGISTER or by such other means as the Administrator finds appropriate to provide notice to the public.

(e) Filing and service. (1) An original and two copies of all documents or papers required or permitted to be filed pursuant to this section and §91.512(c) must be filed with the Hearing Clerk of the Agency. Filing is considered timely if mailed, as determined by the postmark, to the Hearing Clerk within the time allowed by this section and §91.512(b). If filing is to be accomplished by mailing, the documents must be sent to the address set forth in the notice of public hearing referred to in paragraph (d)(4) of this section.

(2) To the maximum extent possible, testimony will be presented in written form. Copies of written testimony will be served upon all parties as soon as practicable prior to the start of the hearing. A certificate of service will be provided on or accompany each document or paper filed with the Hearing Clerk. Documents to be served upon the Manager of the Engine Compliance Programs Group must be sent by registered mail to: Manager, Engine Compliance Programs Group 6403–J, U.S. Environmental Protection Agency, 1200 Pennsylvania Ave., NW., Washington, DC 20460. Service by registered mail is complete upon mailing.

(f) Computation of time. (1) In computing any period of time prescribed or allowed by this section, except as otherwise provided, the day of the act or event from which the designated period of time begins to run is not included. Saturdays, Sundays, and federal legal holidays are included in computing the period allowed for the filing of any document or paper, except that when the period expires on a Saturday, Sunday, or federal legal holiday, the period is extended to include the next following business day.

(2) A prescribed period of time within which a party is required or permitted to do an act is computed from the time of service, except that when service is accomplished by mail, three days will be added to the prescribed period.

(g) Consolidation. The Administrator or the Presiding Officer in his or her discretion may consolidate two or more proceedings to be held under this

section for the purpose of resolving one or more issues whenever it appears that consolidation will expedite or simplify consideration of these issues. Consolidation does not affect the right of any party to raise issues that could have been raised if consolidation had not occurred.

(h) Hearing date. To the extent possible hearings under § 91.512 will be scheduled to commence within 14 days of receipt of the request for a hearing.

§ 91.514 Hearing procedures.

The procedures provided in § 86.1014–84(i) to (s) apply for hearings requested pursuant to § 91.512 regarding suspension, revocation, or voiding of a certificate of conformity.

§ 91.515 Appeal of hearing decision.

The procedures provided in § 86.1014–84(t) to (aa) apply for appeals filed with respect to hearings held pursuant to § 91.514.

§ 91.516 Treatment of confidential information.

Except for information required by § 91.509(e)(2) and § 91.509 (e)(6)(vi), information submitted to EPA pursuant to § 91.509(e) shall be made available to the public upon request by EPA notwithstanding any claim of confidentiality made by the submitter. The provisions for treatment of confidential information described in § 91.7 apply to the information required by § 91.509(e)(2) and all other information submitted pursuant to this subpart.

Subpart G—Selective Enforcement Auditing Regulations

§ 91.601 Applicability.

The requirements of subpart G are applicable to all marine SI engines subject to the provisions of subpart A of part 91.

§ 91.602 Definitions.

The definitions in subpart A and subpart F of this part apply to this subpart. The following definitions also apply to this subpart.

Acceptable quality level (AQL) means the maximum percentage of failing engines that can be considered a satisfactory process average for sampling inspections.

Inspection criteria means the pass and fail numbers associated with a particular sampling plan.

§ 91.603 Applicability of part 91, subpart F.

(a) For purposes of selective enforcement audits conducted under this subpart, marine SI engines subject to provisions of subpart B of this part are subject to regulations specified in subpart F of this part, except:

(1) Section 91.501 does not apply.

(2) Section 91.503 does not apply. See § 91.605.

(3) Section 91.506 does not apply. See § 91.606.

(4) Section 91.507 does not apply. See § 91.607.

(5) Section 91.508 does not apply.

(6) Paragraphs (d) and (e)(6)(v) and references to ''sample sizes, N and n'' of § 91.509 do not apply.

(7) The introductory text in § 91.509 does not apply. The following text applies:

''Within 5 working days after completion of testing of all engines pursuant to a test order.''

(8) The introductory text of § 91.509(e)(9) does not apply. The following text applies:

The following signed statement and endorsement by an authorized representative of the manufacturer:

This report is submitted pursuant to Sections 213 and 208 of the Clean Air Act. This Selective Enforcement Audit was conducted in complete conformance with all applicable regulations under 40 CFR Part 91 *et seq* and the conditions of the test order. No emission-related changes to production processes or quality control procedures for the engine family tested have been made between receipt of the test order and conclusion of the audit. All data and information reported herein is, to the best of (Company Name) knowledge, true and accurate. I am aware of the penalties associated with violations of the Clean Air Act and the regulations thereunder. (Authorized Company Representative.)

(9) Section 91.510 does not apply. See § 91.608.

§ 91.604 Test orders.

(a) A test order addressed to the manufacturer is required for any testing under this subpart.

(b) The test order is signed by the Assistant Administrator for Air and Radiation or his or her designee. The test order must be delivered in person by an EPA enforcement officer or EPA authorized representative to a company representative or sent by registered mail, return receipt requested, to the manufacturer's representative who signed the application for certification submitted by the manufacturer, pursuant to the requirements of the applicable section of subpart B of this part. Upon receipt of a test order, the manufacturer must comply with all of the provisions of this subpart and instructions in the test order.

(c) *Information included in test order.* (1) The test order will specify the engine family to be selected for testing, the manufacturer's engine assembly plant or associated storage facility or port facility (for imported engines) from which the engines must be selected, the time and location at which engines must be selected, and the procedure by which engines of the specified family must be selected. The test order may specify the configuration to be audited and/or the number of engines to be selected per day. Engine manufacturers are required to select a minimum of four engines per day unless an alternate selection procedure is approved pursuant to § 91.606(a), or unless total production of the specified configuration is less than four engines per day. If total production of the specified configuration is less than four engines per day, the manufacturer selects the actual number of engines produced per day.

(2) The test order may include alternate families to be selected for testing at the Administrator's discretion in the event that engines of the specified family are not available for testing because those engines are not being manufactured during the specified time or are not being stored at the specified assembly plant, associated storage facilities, or port of entry.

(3) If the specified family is not being manufactured at a rate of at least two engines per day in the case of manufacturers specified in 40 CFR 89.607(g)(1), or one engine per day in the case of manufacturers specified in 40 CFR 89.607(g)(2), over the expected duration of the audit, the Assistant Administrator or her or his designated representative may select engines of the alternate family for testing.

(4) In addition, the test order may include other directions or information essential to the administration of the required testing.

(d) A manufacturer may submit a list of engine families and the corresponding assembly plants, associated storage facilities, or (in the case of imported engines) port facilities from which the manufacturer prefers to have engines selected for testing in response to a test order. In order that a manufacturer's preferred location be considered for inclusion in a test order for a particular engine family, the list must be submitted prior to issuance of the test order. Notwithstanding the fact that a manufacturer has submitted the list, the Administrator may order selection at other than a preferred location.

(e) Upon receipt of a test order, a manufacturer must proceed in accordance with the provisions of this subpart.

§ 91.605 Testing by the Administrator.

(a) The Administrator may require by test order under § 91.604 that engines of a specified family be selected in a manner consistent with the requirements of § 91.606 and submitted to the Administrator at the place designated for the purpose of conducting emission tests. These tests will be conducted in accordance with § 91.607 to determine whether engines manufactured by the manufacturer conform with the regulations with respect to which the certificate of conformity was issued.

(b) *Designating official data.* (1) Whenever the Administrator conducts a test on a test engine or the Administrator and manufacturer each conduct a test on the same test engine, the results of the Administrator's test comprise the official data for that engine.

(2) Whenever the manufacturer conducts all tests on a test engine, the manufacturer's test data is accepted as the official data, provided that if the

Administrator makes a determination based on testing conducted under paragraph (a) of this section that there is a substantial lack of agreement between the manufacturer's test results and the Administrator's test results, no manufacturer's test data from the manufacturer's test facility will be accepted for purposes of this subpart.

(c) If testing conducted under § 91.604 is unacceptable under paragraph (b)(2) of this section, the Administrator must:

(1) Notify the manufacturer in writing of the Administrator's determination that the test facility is inappropriate for conducting the tests required by this subpart and the reasons therefor; and

(2) Reinstate any manufacturer's data upon a showing by the manufacturer that the data acquired under § 91.604 was erroneous and the manufacturer's data was correct.

(d) The manufacturer may request in writing that the Administrator reconsider the determination in paragraph (b)(2) of this section based on data or information which indicates that changes have been made to the test facility and these changes have resolved the reasons for disqualification.

§ 91.606 Sample selection.

(a) Engines comprising a test sample will be selected at the location and in the manner specified in the test order. If a manufacturer determines that the test engines cannot be selected in the manner specified in the test order, an alternative selection procedure may be employed, provided the manufacturer requests approval of the alternative procedure prior to the start of test sample selection, and the Administrator approves the procedure.

(b) The manufacturer must produce and assemble the test engines of the family selected for testing using its normal production and assembly process for engines to be distributed into commerce. If, between the time the manufacturer is notified of a test order and the time the manufacturer finishes selecting test engines, the manufacturer implements any change(s) in its production or assembly processes, including quality control, which may reasonably be expected to affect the emissions of the engines selected, then the manufacturer must, during the audit, inform the Administrator of such changes. If the test engines are selected at a location where they do not have their operational and emission control systems installed, the test order will specify the manner and location for selection of components to complete assembly of the engines. The manufacturer must assemble these components onto the test engines using normal assembly and quality control procedures as documented by the manufacturer.

(c) No quality control, testing, or assembly procedures will be used on the test engine or any portion thereof, including parts and subassemblies, that have not been or will not be used during the production and assembly of all other engines of that family, unless the Administrator approves the modification in production or assembly procedures pursuant to paragraph (b) of this section.

(d) The test order may specify that an EPA enforcement officer(s) or authorized representative(s), rather than the manufacturer, select the test engines according to the method specified in the test order.

(e) The order in which test engines are selected determines the order in which test results are to be used in applying the sampling plan in accordance with § 91.608.

(f) The manufacturer must keep on hand all untested engines, if any, comprising the test sample until a pass or fail decision is reached in accordance with § 91.608(e). The manufacturer may ship any tested engine which has not failed the requirements as set forth in § 91.608(b). However, once the manufacturer ships any test engine, it relinquishes the prerogative to conduct retests as provided in § 91.607(i).

§ 91.607 Test procedures.

(a)(1) For marine SI engines subject to the provisions of this subpart, the prescribed test procedures are the test procedures as specified in subpart E of this part.

(2) The Administrator may, on the basis of a written application by a manufacturer, prescribe test procedures other than those specified in

paragraph (a)(1) of this section for any marine engine he or she determines is not susceptible to satisfactory testing using the procedures specified in paragraph (a)(1) of this section.

(b)(1) The manufacturer may not adjust, repair, prepare, or modify the engines selected for testing and may not perform any emission tests on engines selected for testing pursuant to the test order unless this adjustment, repair, preparation, modification, and/or tests are documented in the manufacturer's engine assembly and inspection procedures and are actually performed or unless these adjustments and/or tests are required or permitted under this subpart or are approved in advance by the Administrator.

(2) The Administrator may adjust or cause to be adjusted any engine parameter which the Administrator has determined to be subject to adjustment for certification and Selective Enforcement Audit testing in accordance with §91.112, to any setting within the physically adjustable range of that parameter, as determined by the Administrator in accordance with §91.112, prior to the performance of any tests. However, if the idle speed parameter is one which the Administrator has determined to be subject to adjustment, the Administrator may not adjust it to any setting which causes a lower engine idle speed than would have been possible within the physically adjustable range of the idle speed parameter if the manufacturer had accumulated 12 hours of service on the engine under paragraph (c) of this section, all other parameters being identically adjusted for the purpose of the comparison. The manufacturer may be requested to supply information needed to establish an alternate minimum idle speed. The Administrator, in making or specifying these adjustments, may consider the effect of the deviation from the manufacturer's recommended setting on emission performance characteristics as well as the likelihood that similar settings will occur on in-use engines. In determining likelihood, the Administrator may consider factors such as, but not limited to, the effect of the adjustment on engine performance characteristics and information from similar in-use engines.

(c) *Service accumulation*. Prior to performing exhaust emission testing on an SEA test engine, the manufacturer may accumulate on each engine a number of hours of service equal to the greater of 12 hours or the number of hours the manufacturer accumulated during certification on the emission data engine corresponding to the family specified in the test order.

(1) Service accumulation must be performed in a manner using good engineering judgment to obtain emission results representative of normal production engines. This service accumulation must be consistent with the new engine break-in instructions contained in the applicable owner's manual.

(2) The manufacturer must accumulate service at a minimum rate of 6 hours per engine during each 24-hour period, unless otherwise approved by the Administrator.

(i) The first 24-hour period for service begins as soon as authorized checks, inspections, and preparations are completed on each engine.

(ii) The minimum service accumulation rate does not apply on weekends or holidays.

(iii) If the manufacturer's service or target is less than the minimum rate specified (6 hours per day), then the minimum daily accumulation rate is equal to the manufacturer's service target.

(3) Service accumulation must be completed on a sufficient number of test engines during consecutive 24-hour periods to assure that the number of engines tested per day fulfills the requirements of paragraphs (g)(1) and (g)(2) of this section.

(d) The manufacturer may not perform any maintenance on test engines after selection for testing, nor may the Administrator allow deletion of any engine from the test sequence, unless requested by the manufacturer and approved by the Administrator before any engine maintenance or deletion.

(e) The manufacturer must expeditiously ship test engines from the point of selection to the test facility. If the test facility is not located at or in close proximity to the point of selection, the manufacturer must assure that test engines arrive at the test facility within 24 hours of selection. The

Administrator may approve more time for shipment based upon a request by the manufacturer accompanied by a satisfactory justification.

(f) If an engine cannot complete the service accumulation or an emission test because of a malfunction, the manufacturer may request that the Administrator authorize either the repair of that engine or its deletion from the test sequence.

(g) Whenever a manufacturer conducts testing pursuant to a test order issued under this subpart, the manufacturer must notify the Administrator within one working day of receipt of the test order as to which test facility will be used to comply with the test order. If no test cells are available at a desired facility, the manufacturer must provide alternate testing capability satisfactory to the Administrator.

(1) A manufacturer with projected nonroad engine sales for the United States market for the applicable year of 7,500 or greater must complete emission testing at a minimum rate of two engines per 24-hour period, including each voided test and each smoke test.

(2) A manufacturer with projected nonroad engine sales for the United States market for the applicable year of less than 7,500 must complete emission testing at a minimum rate of one engine per 24-hour period, including each voided test and each smoke test.

(3) The Administrator may approve a lower daily rate of emission testing based upon a request by a manufacturer accompanied by a satisfactory justification.

(h) The manufacturer must perform test engine selection, shipping, preparation, service accumulation, and testing in such a manner as to assure that the audit is performed in an expeditious manner.

(i) Retesting. (1) The manufacturer may retest any engines tested during a Selective Enforcement Audit once a fail decision for the audit has been reached in accordance with § 91.608(e).

(2) The Administrator may approve retesting at other times based upon a request by the manufacturer accompanied by a satisfactory justification.

(3) The manufacturer may retest each engine a total of three times. The manufacturer must test each engine or vehicle the same number of times. The manufacturer may accumulate additional service before conducting a retest, subject to the provisions of paragraph (c) of this section.

(j) A manufacturer must test engines with the test procedure specified in subpart E of this part to demonstrate compliance with the exhaust emission standard (or applicable FEL) for $HC+NO_X$. If alternate procedures were used in certification pursuant to § 91.119, then those alternate procedures must be used.

§ 91.608 Compliance with acceptable quality level and passing and failing criteria for selective enforcement audits.

(a) The prescribed acceptable quality level is 40 percent.

(b) A failed engine is one whose final test results pursuant to § 91.509(b), for $HC+NO_X$. exceed the applicable family emission level.

(c) The manufacturer must test engines comprising the test sample until a pass decision is reached for $HC+NO_X$ or a fail decision is reached for $HC+NO_X$. A pass decision is reached when the cumulative number of failed engines, as defined in paragraph (b) of this section, for $HC+NO_X$ is less than or equal to the pass decision number, as defined in paragraph (d) of this section, appropriate to the cumulative number of engines tested. A fail decision is reached when the cumulative number of failed engines for $HC+NO_X$ is greater than or equal to the fail decision number, as defined in paragraph (d) of this section, appropriate to the cumulative number of engines tested.

(d) The pass and fail decision numbers associated with the cumulative number of engines tested are determined by using the tables in Appendix A to this subpart, ''Sampling Plans for Selective Enforcement Auditing of Marine Engines,'' appropriate to the projected sales as made by the manufacturer in its report to EPA under § 91.504(c)(1). In the tables in Appendix A to this subpart, sampling plan ''stage'' refers to the cumulative number of engines tested. Once a pass or fail decision has been made for $HC+NO_X$. the number of engines with

final test results exceeding the emission standard for $HC+NO_X$ shall not be considered any further for the purposes of the audit.

(e) Passing or failing of an SEA occurs when the decision is made on the last engine required to make a decision under paragraph (c) of this section.

(f) The Administrator may terminate testing earlier than required in paragraph (c) of this section.

APPENDIX A TO SUBPART G OF PART 91—SAMPLING PLANS FOR SELECTIVE ENFORCEMENT AUDITING OF MARINE ENGINES

TABLE 1—SAMPLING PLAN CODE LETTER

Annual engine family sales	Code letter
20–50	AA [1]
20–99	A [1]
100–299	B
300–499	C
500 or greater	D

[1] A manufacturer may optionally use either the sampling plan for code letter "AA" or sampling plan for code letter "A" for Selective Enforcement Audits of engine families with annual sales between 20 and 50 engines. Additional, the manufacturers may switch between these plans during the audit.

TABLE 2—SAMPLING PLAN FOR CODE LETTER "AA"

[Sample inspection criteria]

Stage	Pass No.	Fail No.	Stage	Pass No.	Fail No.
1	(1)	(2)	11	4	8
2	(1)	(2)	12	4	9
3	0	(2)	13	5	9
4	0	(2)	14	5	10
5	1	5	15	6	10
6	1	6	16	6	10
7	2	6	17	7	10
8	2	7	18	8	10
9	3	7	19	8	10
10	3	8	20	9	10

[1] Test sample passing not permitted at this stage.
[2] Test sample failure not permitted at this stage.

TABLE 3—SAMPLING PLAN FOR CODE LETTER "A"

[Sample inspection criteria]

Stage	Pass No.	Fail No.	Stage	Pass No.	Fail No.
1	(1)	(2)	16	6	11
2	(1)	(2)	17	7	12
3	(1)	(2)	18	7	12
4	0	(2)	19	8	13
5	0	(2)	20	8	13
6	1	6	21	9	14
7	1	7	22	10	14
8	2	7	23	10	15
9	2	8	24	11	15
10	3	8	25	11	16
11	3	8	26	12	16

TABLE 3—SAMPLING PLAN FOR CODE LETTER "A"—Continued

[Sample inspection criteria]

Stage	Pass No.	Fail No.	Stage	Pass No.	Fail No.
12	4	9	27	12	17
13	5	10	28	13	17
14	5	10	29	14	17
15	6	11	30	16	17

[1] Test sample passing not permitted at this stage.
[2] Test sample failure not permitted at this stage.

TABLE 4—SAMPLING PLAN FOR CODE LETTER "B"

[Sample inspection criteria]

Stage	Pass No.	Fail No.
1	(1)	(2)
2	(1)	(2)
3	(1)	(2)
4	(1)	(2)
5	0	(2)
6	1	6
7	1	7
8	2	7
9	2	8
10	3	8
11	3	9
12	4	9
13	4	10
14	5	10
15	5	11
16	6	12
17	6	12
18	7	13
19	8	13
20	8	14
21	9	14
22	9	15
23	10	15
24	10	16
25	11	16
26	11	17
27	12	17
28	12	18
29	13	18
30	13	19
31	14	19
32	14	20
33	15	20
34	16	21
35	16	21
36	17	22
37	17	22
38	18	22
39	18	22
40	21	22

[1] Test sample passing not permitted at this stage.
[2] Test sample failure not permitted at this stage.

TABLE 5—SAMPLING PLAN FOR CODE LETTER "C"

[Sample inspection criteria]

Stage	Pass No.	Fail No.
1	(1)	(2)
2	(1)	(2)
3	(1)	(2)
4	(1)	(2)

TABLE 5—SAMPLING PLAN FOR CODE LETTER "C"—Continued

[Sample inspection criteria]

Stage	Pass No.	Fail No.
5	0	(2)
6	0	6
7	1	7
8	2	7
9	2	8
10	3	9
11	3	9
12	4	10
13	4	10
14	5	11
15	5	11
16	6	12
17	6	12
18	7	13
19	7	13
20	8	14
21	8	14
22	9	15
23	10	15
24	10	16
25	11	16
26	11	17
27	12	17
28	12	18
29	13	18
30	13	19
31	14	19
32	14	20
33	15	20
34	15	21
35	16	21
36	16	22
37	17	22
38	18	23
39	18	23
40	19	24
41	19	24
42	20	25
43	20	25
44	21	26
45	21	27
46	22	27
47	22	27
48	23	27
49	23	27
50	26	27

[1] Test sample passing not permitted at this stage.
[2] Test sample failure not permitted at this stage.

TABLE 6—SAMPLING PLAN FOR CODE LETTER "D"

[Sample inspection criteria]

Stage	Pass No.	Fail No.
1	(1)	(2)
2	(1)	(2)
3	(1)	(2)
4	(1)	(2)
5	0	(2)
6	0	6
7	1	7
8	2	8
9	2	8
10	3	9
11	3	9
12	4	10
13	4	10

TABLE 6—SAMPLING PLAN FOR CODE LETTER "D"—Continued

[Sample inspection criteria]

Stage	Pass No.	Fail No.
14	5	11
15	5	11
16	6	12
17	6	12
18	7	13
19	7	13
20	8	14
21	8	14
22	9	15
23	9	15
24	10	16
25	11	16
26	11	17
27	12	17
28	12	18
29	13	19
30	13	19
31	14	20
32	14	20
33	15	21
34	15	21
35	16	22
36	16	22
37	17	23
38	17	23
39	18	24
40	18	24
41	19	25
42	19	26
43	20	26
44	21	27
45	21	27
46	22	28
47	22	28
48	23	29
49	23	29
50	24	30
51	24	30
52	25	31
53	25	31
54	26	32
55	26	32
56	27	33
57	27	33
58	28	33
59	28	33
60	32	33

[1] Test sample passing not permitted at this stage.
[2] Test sample failure not permitted at this stage.

[61 FR 52102, Oct. 4, 1996, as amended at 67 FR 68340, Nov. 8, 2002]

Subpart H—Importation of Nonconforming Marine Engines

§ 91.701 Applicability.

(a) Except where otherwise indicated, this subpart is applicable to marine SI engines for which the Administrator has promulgated regulations under this part prescribing emission standards, including engines incorporated into marine vessels or equipment, that are offered for importation or imported

into the United States, but which engines, at the time of importation or being offered for importation are not covered by certificates of conformity issued under section 213 and section 206(a) of the Clean Air Act as amended (that is, which are nonconforming marine engines as defined in §91.702), and this part. Compliance with regulations under this subpart does not relieve any person or entity from compliance with other applicable provisions of the Clean Air Act.

(b) Regulations prescribing further procedures for the importation of marine SI engines and marine vessels or equipment into the customs territory of the United States, as defined in 19 U.S.C. 1202, are set forth in U.S. Customs Service regulations.

§91.702 Definitions.

The definitions in subpart A of this part apply to this subpart. The following definitions also apply to this subpart.

Certificate of conformity. The document issued by the Administrator under section 213 and section 206(a) of the Act.

Nonconforming marine engine. A marine SI engine which is not covered by a certificate of conformity prior to importation or being offered for importation (or for which such coverage has not been adequately demonstrated to EPA). Also, a marine SI engine which was originally covered by a certificate of conformity, but subsequently altered or modified such that it is no longer in a certified configuration.

Original engine manufacturer (OEM). The entity which originally manufactured the marine engine.

United States. United States includes the customs territory of the United States as defined in 19 U.S.C. 1202, and the Virgin Islands, Guam, American Samoa, and the Commonwealth of the Northern Mariana Islands.

§91.703 Admission.

(a) A nonconforming marine SI engine offered for importation may only be imported into the United States under §91.704, provided that an exemption or exclusion is granted by the Administrator. Final admission shall not be granted unless the marine SI engine is exempted or excluded under §91.704.

(b) In order to obtain admission the importer must submit to the Administrator a written request for approval containing the following:

(1) Identification of the importer of the marine SI engine and the importer's address, telephone number, and taxpayer identification number;

(2) Identification of the marine SI engine owner, the owner's address, telephone number, and taxpayer identification number;

(3) Identification of the marine SI engine including make, model, identification number, and original production year;

(4) Information indicating under what provision of these regulations the marine SI engine is to be imported;

(5) Identification of the place(s) where the subject marine SI engine is to be stored;

(6) Authorization for EPA enforcement officers to conduct inspections or testing otherwise permitted by the Act or regulations thereunder; and

(7) Such other information as is deemed necessary by the Administrator.

§91.704 Exemptions and exclusions.

(a) Individuals and businesses are eligible to import nonconforming marine SI engines into the United States only under the provisions of this section.

(b) Notwithstanding other requirements of this subpart, a nonconforming marine SI engine entitled to one of the temporary exemptions of this paragraph may be conditionally admitted into the United States if prior written approval for the conditional admission is obtained from the Administrator. Conditional admission must be under bond. The Administrator may request that the U.S. Customs Service require a specific bond amount to ensure compliance with the requirements of the Act and this subpart. A written request for approval from the Administrator must contain the identification required in §91.703(b) and information that demonstrates that the importer is entitled to the exemption. Noncompliance with provisions of this section may result in the forfeiture of the total amount of the bond or exportation of

the marine engine. The following temporary exemptions are permitted by this paragraph:

(1) *Exemption for repairs or alterations.* Upon written approval by EPA, a person may conditionally import under bond a nonconforming marine SI engine solely for purpose of repair(s) or alteration(s). The marine SI engines may not be operated in the United States other than for the sole purpose of repair or alteration. It may not be sold or leased in the United States and must be exported upon completion of the repair(s) or alteration(s).

(2) *Testing exemption.* A nonconforming test marine SI engine may be conditionally imported under bond by a person subject to the requirements of § 91.1005. A test marine SI engine may be operated in the United States provided that the operation is an integral part of the test. This exemption is limited to a period not exceeding one year from the date of importation unless a request is made by the appropriate importer, and subsequently granted by EPA, concerning the marine engine in accordance with § 91.1005(f) for a subsequent one-year period.

(3) *Display exemptions.* (i) A nonconforming marine engine intended solely for display may be conditionally imported under bond subject to the requirements of § 91.1007.

(ii) A display marine engine may be imported by any person for purposes related to a business or the public interest. Such purposes do not include collections normally inaccessible or unavailable to the public on a daily basis, display of a marine engine at a dealership, private use, or other purpose that the Administrator determines is not appropriate for display exemptions. A display marine engine may not be sold or leased in the United States and may not be operated in the United States except for the operation incident and necessary to the display purpose.

(iii) A temporary display exemption is granted for 12 months or for the duration of the display purpose, whichever is shorter. Extensions of up to 12 months each are available upon approval by the Administrator. In no circumstances, however, may the total period of exemption exceed 36 months.

(c) Notwithstanding any other requirement of this subpart, a marine SI engine may be finally admitted into the United States under this paragraph if prior written approval for such final admission is obtained from the Administrator. A request for approval is to contain the identification information required in § 91.703(b) (except for § 91.703(b)(5)) and information that demonstrates that the importer is entitled to the exemption. The following exemptions are permitted by this paragraph:

(1) *National security exemption.* A nonconforming marine engine may be imported under the national security exemption found at § 91.1008.

(2) *Exemption for marine engines identical to United States certified versions.* (i) Any person (including businesses) is eligible for importing a nonconforming marine SI engine into the United States under the provisions of this paragraph. An exemption will be granted if the applicant demonstrates to the satisfaction of the Administrator that the marine engine:

(A) Is owned by the importer;

(B) Is not offered for importation for the purpose of resale; and

(C) Is proven to be identical, in all material respects, to a marine SI engine of the same or later model year certified by the Original Engine Manufacturer for sale in the United States or is proven to have been modified to be identical, in all material respects, to a marine engine of the same or later model year certified by the OEM for sale in the United States according to complete written instructions provided by the OEM's United States representative, or his/her designee.

(ii) Proof of conformity.

(A) Documentation submitted pursuant to this section for the purpose of proving conformity of individual marine engines is to contain sufficiently organized data or evidence demonstrating that the marine engine identified pursuant to § 91.703(b) is identical, in all material respects, to a marine engine identified in an OEM's application for certification.

(B) If the documentation does not contain all the information required by this part, or is not sufficiently organized, EPA will notify the importer of

any areas of inadequacy and that the documentation will not receive further consideration until the required information or organization is provided.

(C) If EPA determines that the documentation does not clearly or sufficiently demonstrate that a marine engine is eligible for importation under this paragraph, EPA will notify the importer in writing.

(D) If EPA determines that the documentation clearly and sufficiently demonstrates that a marine engine is eligible for importation under this paragraph, EPA will grant approval for final admission in writing.

(d) Foreign diplomatic and military personnel may conditionally import a nonconforming marine engine without bond. At the time of conditional admission, the importer must submit to the Administrator the written report required in §91.703(b) (except for information required by §91.703(b)(5)) and a statement from the U.S. Department of State confirming qualification for this exemption. Foreign military personnel may, in lieu of a statement from the U.S. Department of State, submit to the Administrator a copy of their orders for duty in the United States. The marine SI engine may not be sold or leased in the United States and must be exported if the individual's diplomatic status or the foreign military orders for duty in the U.S. are no longer applicable, as determined by the Department of State, unless subsequently brought into conformity with U.S. emission requirements in accordance with §91.704(c)(2).

(e) Competition exclusion. A nonconforming marine engine may be conditionally imported by any person provided the importer demonstrates to the Administrator that the marine engine is used to propel a marine vessel used solely for competition and obtains prior written approval from the Administrator. A nonconforming engine imported pursuant to this paragraph may not be operated in the United States except for that operation incident and necessary for the competition purpose, unless subsequently brought into conformity with United States emission requirements in accordance with §91.704(c)(2).

(f) An application for exemption and exclusion provided for in paragraphs (b), (c), and (e) of this section shall be mailed to: U.S. Environmental Protection Agency, Office of Mobile Sources, Engine Programs & Compliance Division (6403–J), 1200 Pennsylvania Ave., NW., Washington, DC 20460, Attention: Imports.

§91.705 Prohibited acts; penalties.

(a) The importation of a marine SI engine, including a marine engine incorporated into marine vessels or equipment, which is not covered by a certificate of conformity other than in accordance with this subpart and the entry regulations of the U.S. Customs Service is prohibited. Failure to comply with this section is a violation of §91.1103(a)(1) and section 213(d) of the Act.

(b) Unless otherwise permitted by this subpart, during a period of conditional admission, the importer of a marine engine may not:

(1) Register, license, or operate the marine engine in the United States;

(2) Sell or lease or offer the marine engine for sale or lease;

(c) A marine SI engine conditionally admitted pursuant to §91.704 (b), (d) or (e) and not granted final admission by the end of the period of conditional admission, or within such additional time as the Administrator and the U.S. Customs Service may allow, is deemed to be unlawfully imported into the United States in violation of §91.1103(a)(1), section 213(d) and section 203 of the Act, unless the marine engine has been delivered to the U.S. Customs Service for export or other disposition under applicable Customs laws and regulations. A marine SI engine not so delivered is subject to seizure by the U.S. Customs Service.

(d) An importer who violates §91.1103(a)(1), section 213(d) and section 203 of the Act is subject to a civil penalty under §91.1106 and section 205 of the Act of not more than $32,500 for each marine engine subject to the violation. In addition to the penalty provided in the Act, where applicable, a person or entity who imports an engine under the exemption provisions of §91.704(b) and, who fails to deliver the marine engine to the U.S. Customs

Service by the end of the period of conditional admission is liable for liquidated damages in the amount of the bond required by applicable Customs laws and regulations. The maximum penalty value listed in this paragraph (d) is shown for calendar year 2004. Maximum penalty limits for later years may be adjusted based on the Consumer Price Index. The specific regulatory provisions for changing the maximum penalties, published in 40 CFR part 19, reference the applicable U.S. Code citation on which the prohibited action is based.

[61 FR 52102, Oct. 4, 1996, as amended at 70 FR 40452, July 13, 2005]

§ 91.706 Treatment of confidential information.

The provisions for treatment of confidential information as described in § 91.7 apply.

Subpart I—In-Use Testing and Recall Regulations

§ 91.801 Applicability.

The requirements of subpart I are applicable to all marine SI engines subject to the provisions of subpart A of part 91.

(a) Marine engines subject to provisions of subpart B of this part are subject to recall regulations specified in 40 CFR part 85, subpart S, except for the items set forth in this subsection.

(b) Reference to section 214 of the Clean Air Act in 40 CFR 85.1801(a) does not apply. Reference to section 216 of the Clean Air Act does apply.

(c) Reference to section 202 of the Act in 40 CFR 85.1802(a) does not apply. Reference to section 213 of the Act does apply.

(d) Reference to ''family particulate emission limits as defined in Part 86 promulgated under section 202 of the Act'' in 40 CFR 85.1803(a) and 85.1805(a)(1) does not apply. Family emission limits as defined in 40 CFR part 89 promulgated under section 213 of the Act does apply.

(e) Add the following paragraph to 40 CFR 85.1805 (a)(9): A telephone number provided by the manufacturer, which may be used to report difficulty in obtaining recall repairs.

(f) The requirements of the Manufacturer In-use testing program set forth in §§ 91.803 through 91.805 are waived for existing technology OB/PWC as defined in § 91.3 through model year 2003.

(1) The Administrator has the discretion to waive the requirements of the Manufacturer In-use testing program set forth in sections 91.803 through 91.805 for existing technology OB/PWC for a specific engine family up to model year 2005 if, upon the request of the manufacturer, the Administrator determines that the engine family will be phased out of U.S. production by model year 2005. As a condition to receiving such a waiver for either model year 2004 or 2005 or both, the manufacturer must discontinue U.S. production according to the schedule upon which the Administrator based the waiver. Failure to do so by the manufacturer will void *ab initio* the certificate of conformity.

(2) A manufacturer request under paragraph (f)(1) of this section must be in writing and must apply to a specific engine family. The request must identify the engine family designation, the schedule for phasing the engine family out of U.S. production, and any other information the Administrator may require.

§ 91.802 Definitions.

(a) For the purposes of this subpart, except as otherwise provided, the definitions in subpart A of this part apply to this subpart.

(b) The definitions of 40 CFR Part 85, subpart S, § 85.1801 also apply to this Part.

§ 91.803 Manufacturer in-use testing program.

(a) EPA shall annually identify engine families and those configurations within families which the manufacturers must then subject to in-use testing. For each model year, EPA may identify the following number of engine families for testing, based on the number of the manufacturer's engine families to which this subpart is applicable produced in that model year:

(1) For manufactures with three or fewer engine families, EPA may identify a single engine family.

(2) For manufacturers with four or more engine families, EPA may identify a number of engine families that is no greater than twenty-five percent of the number of engine families to which this subpart is applicable that are produced by the manufacturer in that model year.

(b) For each engine family identified by EPA, engine manufacturers shall perform emission testing of an appropriate sample of in-use engines from each engine family. Manufacturers shall submit data from this in-use testing to EPA.

(c) *Number of engines to be tested.* An engine manufacturer shall test in-use engines from each engine family identified by EPA. Engines to be tested shall have accumulated between half and three-quarters of the family's useful life. The number of engines to be tested by a manufacturer will be determined by the following method:

(1) A minimum of four (4) engines per family provided that no engine fails any standard. For each failing engine, two more engines shall be tested until the total number of engines equals ten (10).

(2) For engine families of less than 500 engines for the identified model year or for engine manufacturers who make less than or equal to 2,000 for that model year, a minimum of two (2) engines per family provided that no engine fails any standard. For each failing engine, two more engines shall be tested until the total number of engines equals ten (10).

(3) If an engine family was certified using carry over emission data and has been previously tested under paragraph (c) (1) or (2) of this section (and EPA has not ordered a recall for that family), then only one engine for that family must be tested. If that one engine fails any pollutant, testing must be conducted as outlined at paragraph (c) (1) or (2) of this section, whichever is appropriate.

(d) At the discretion of the Administrator, an engine manufacturer may test more engines than the minima described in paragraph (c) of this section or may concede failure before testing a total of ten (10) engines.

(e) The Administrator will consider failure rates, average emission levels and the existence of any defects among other factors in determining whether to pursue remedial action under this subpart. The Administrator may order a recall pursuant to §§ 91.807–91.814 before testing reaches the tenth engine.

(f) The Administrator may approve an alternative to manufacturer in-use testing, where:

(1) Engine family production is less than or equal to 200 per year; or

(2) Engines cannot be obtained for testing because they are used substantially in craft which are not conducive to engine removal such as large vessels where the engine can not be removed without dismantling either the engine or the vessel; or

(3) Other compelling circumstances associated with the structure of the industry and uniqueness of marine engine applications. Such alternatives shall be designed to determine whether the engine family is in compliance in-use.

(g) *Collection of in-use engines.* The engine manufacturer shall procure in-use engines which have been operated for between half and three-quarters of the engine's useful life. The engine manufacturer may test engines from more than one model year in a given year. The manufacturer shall begin testing within twelve calendar months after receiving notice that EPA has identified a particular engine family for testing and shall complete testing of such engine family within twelve calendar months from the start of such testing. Test engines may be procured from sources associated with the engine manufacturer (i.e., manufacturer established fleet engines, etc.) or from sources not associated with the manufacturer (i.e., consumer-owned engines, independently-owned fleet engines, etc.).

[61 FR 52102, Oct. 4, 1996, as amended at 67 FR 68340, Nov. 8, 2002]

§ 91.804 Maintenance, procurement and testing of in-use engines.

(a) A test engine must have a maintenance and use history representative of actual in-use conditions.

(1) To comply with this requirement a manufacturer must obtain information from the end users regarding the

accumulated usage, maintenance, operating conditions, and storage of the test engines.

(2) Documents used in the procurement process must be maintained as required in § 91.121.

(b) The manufacturer may perform minimal set-to-spec maintenance on components of a test engine that are not subject to parameter adjustment. Maintenance may include only that which is listed in the owner's instructions for engines with the amount of service and age of the acquired test engine. Documentation of all maintenance and adjustments shall be maintained and retained as required by § 91.121.

(c) At least one valid emission test, according to the test procedure outlined in subpart E of this part, is required for each in-use engine.

(d) The Administrator may waive portions or requirements of the test procedure, if any, that are not necessary to determine in-use compliance.

(e) If a selected in-use engine fails to comply with any applicable emission standards, the manufacturer shall determine the reason for noncompliance. The manufacturer must report all such reasons of noncompliance within fifteen days of completion of testing.

§ 91.805 In-use test program reporting requirements.

(a) The manufacturer shall electronically submit to the Administrator within three (3) months of completion of testing all emission testing results generated from the in-use testing program. The following information must be reported for each test engine:

(1) Engine family,

(2) Model,

(3) Engine serial number,

(4) Date of manufacture,

(5) Estimated hours of use,

(6) Date and time of each test attempt,

(7) Results (if any) of each test attempt,

(8) Results of all emission testing,

(9) Summary of all maintenance and/or adjustments performed,

(10) Summary of all modifications and/or repairs,

(11) Determinations of noncompliance.

(b) The manufacturer must electronically submit the results of its in-use testing with a pre-approved information heading. The Administrator may exempt manufacturers from this requirement upon written request with supporting justification.

(c) All testing reports and requests for approvals made under this subpart shall be addressed to: Manager, Engine Compliance Programs Group 6403–J, U.S. Environmental Protection Agency, 1200 Pennsylvania Ave., NW., Washington, DC 20460.

(d) The Administrator may approve and/or require modifications to a manufacturer's in-use testing programs.

§ 91.806 Voluntary emissions recall.

(a) Prior to an EPA ordered recall, the manufacturer may perform a voluntary emissions recall pursuant to regulations at § 91.904 of this part. Such manufacturer is subject to the reporting requirements at § 91.905 of this part.

(b) Once EPA determines that a substantial number of engines fail to conform with the requirements of section 213 of the Act or this part, the manufacturer will not have the option of a voluntary emissions recall.

Subpart J—Emission-related Defect Reporting Requirements, Voluntary Emission Recall Program

§ 91.901 Applicability.

The requirements of this subpart J are applicable to all marine engines subject to the provisions of subpart A of this part 91. The requirement to report emission-related defects affecting a given class or category of engines remains applicable for five years from the end of the model year in which such engines were manufactured.

§ 91.902 Definitions.

The definitions in subpart A of this part apply to this subpart.

§ 91.903 Applicability to part 85, subpart T.

(a) Marine SI engines subject to provisions of subpart A of this part are subject to emission defect reporting requirements specified in 40 CFR Part 85,

subpart T, except for the items set forth in this section.

(b) 40 CFR 85.1901 does not apply. See § 91.901.

(c) Reference to the Clean Air Act, 42 U.S.C. 1857 in 40 CFR 85.1902(a) does not apply. Reference to the Clean Air Act, 42 U.S.C. 7401 does apply.

(d) Reference to the ''approved Application for Certification required by 40 CFR 86.077–22 and like provisions of Part 85 and Part 86 of Title 40 of the Code of Federal Regulations'' does not apply. Reference to the approved application for certification required by 91.108 and like provisions of Part 91 does apply.

(e) Reference to section 202(d) of the Act in § 85.1902(c) does not apply. Reference to section 202(d) and section 213 of the Act does apply.

(f) Reference to section 214 of the Act in § 85.1902(e) and (f) does not apply. Reference to section 216 of the Act does apply.

§ 91.904 Voluntary emission recall.

(a) A manufacturer, prior to initiating a voluntary emission recall program, must submit to the EPA the following information for a 15 day review and comment period:

(1) A description of each class or category of engines recalled, including the number of engines to be recalled, the model year, and such other information as may be required to identify the engines recalled;

(2) A description of the specific modifications, alterations, repairs, corrections, adjustments, or other changes to be made to correct the engines affected by the emission-related defect;

(3) A description of the method by which the manufacturer will notify engine owners including copies of any letters of notification to be sent to engine owners;

(4) A description of the proper maintenance or use, if any, upon which the manufacturer conditions eligibility for repair under the recall plan, and a description of the proof to be required of an engine owner to demonstrate compliance with any such conditions;

(5) A description of the procedure to be followed by engine owners to obtain correction of the nonconformity. This may include designation of the date on or after which the owner can have the nonconformity remedied, the time reasonably necessary to perform the labor to remedy the defect, and the designation of facilities at which the defect can be remedied;

(6) A description of the class of persons other than dealers and authorized warranty agents of the manufacturer who will remedy the defect; and

(7) A description of the system by which the manufacturer will assure that an adequate supply of parts is available to perform the repair under the plan.

(b) The manufacturer must submit at least one report on the progress of the recall campaign. This report is submitted one year from the date notification begins and includes the following information:

(1) The methods used to notify both engine owners, dealers and other individuals involved in the recall campaign;

(2) The number of engines known or estimated to be affected by the emission-related defect and an explanation of the means by which this number was determined;

(3) The number of engines actually receiving repair under the plan;

(4) The number of engine owners, dealers, and other individuals involved in the recall campaign that have been notified and the number of engines that have actually received repair; and

(5) The number of engines determined to be ineligible for remedial action due to a failure to properly maintain or use such engines.

§ 91.905 Reports, voluntary recall plan filing, record retention.

(a) The defect report, voluntary recall plan, and the voluntary recall progress report shall be sent to: Manager, Engine Compliance Programs Group 6403–J, Environmental Protection Agency, 1200 Pennsylvania Ave., NW., Washington, DC 20460.

(b) The information gathered by the manufacturer to compile the reports must be retained for not less than five years from the date of the manufacture of the engines and must be made available to duly authorized officials of the EPA upon request.

§ 91.906 Responsibility under other legal provisions preserved.

The filing of any report under the provisions of this subpart will not affect a manufacturer's responsibility to file reports or applications, obtain approval, or give notice under any provision of law.

§ 91.907 Disclaimer of production warranty applicability.

(a) The act of filing an Emission Defect Information Report is inconclusive as to the existence of a defect subject to the warranty provided by section 207(a) of the Act.

(b) A manufacturer may include on each page of its Emission Defect Information Report a disclaimer stating that the filing of a Defect Information Report pursuant to these regulations is not conclusive as to the applicability of the warranty provided by subpart M of this part.

Subpart K—Exclusion and Exemption of Marine SI Engines

§ 91.1001 Applicability.

The requirements of this subpart K are applicable to all marine spark-ignition propulsion engines subject to the provisions of subpart A of this part 91.

§ 91.1002 Definitions.

The definitions in subpart A of this part apply to this subpart. The following definitions also apply to this subpart:

Exemption means exemption from the prohibitions of § 91.1103.

Export exemption means an exemption granted under § 91.1104(b) for the purpose of exporting new marine SI engines.

National security exemption means an exemption which may be granted under § 91.1104(b) for the purpose of national security.

Manufacturer-owned marine engine means an uncertified marine SI engine owned and controlled by a marine SI engine manufacturer and used in a manner not involving lease or sale by itself or in a marine vessel or piece of equipment employed from year to year in the ordinary course of business for product development, production method assessment, or market promotion purposes.

Testing exemption means an exemption which may be granted under § 91.1104(b) for the purpose of research, investigations, studies, demonstrations or training, but not including national security.

§ 91.1003 Exclusions based on section 216(10) of the Act.

(a) For the purpose of determining the applicability of section 216(10) of the Act, any marine SI engine as that term is defined in subpart A of this part, is deemed a nonroad engine.

(b) EPA will maintain a list of models of marine SI engines, and the marine vessels which use such engines, that have been determined to be excluded because they are used solely for competition. This list will be available to the public and may be obtained by writing to the following address: Group Manager, Engine Compliance Programs Group, Engine Programs and Compliance Division (6403J), Environmental Protection Agency, 1200 Pennsylvania Ave., NW., Washington, DC 20460.

(c) Upon written request with supporting documentation, EPA will make written determinations as to whether certain engines are or are not marine SI engines. Engines that are determined not to be marine SI engines are excluded from regulations under this part but may be subject to regulations under another part.

§ 91.1004 Who may request an exemption.

(a) Any person may request a testing exemption under § 91.1005.

(b) Any marine SI engine manufacturer may request a national security exemption under § 91.1008.

(c) For marine SI engine manufacturers, marine SI engines for export purposes are exempt without application, subject to the provisions of § 91.1009.

(d) For eligible manufacturers, as determined by § 91.1006, manufacturer-owned marine SI engines are exempt without application, subject to the provisions of § 91.1006.

(e) For any person, display marine SI engines are exempt without application, subject to the provisions of § 91.1007.

§91.1005 Testing exemption.

(a) Any person requesting a testing exemption must demonstrate the following:

(1) That the proposed test program has a purpose which constitutes an appropriate basis for an exemption in accordance with §91.1104(b);

(2) That the proposed test program necessitates the granting of an exemption;

(3) That the proposed test program is reasonable in scope; and

(4) That the proposed test program exhibits a degree of control consonant with the purpose of the program and the EPA's monitoring requirements.

(5) Paragraphs (b), (c), (d), and (e) of this section describe what constitutes a sufficient demonstration for each of the four identified elements.

(b) With respect to the purpose of the proposed test program, an appropriate purpose would be research, investigations, studies, demonstrations, or training, but not national security. A concise statement of purpose is a required item of information.

(c) With respect to the necessity that an exemption be granted, necessity arises from an inability to achieve the stated purpose in a practicable manner without performing or causing to be performed one or more of the prohibited acts under §91.1103. In appropriate circumstances, time constraints may be a sufficient basis for necessity, but the cost of certification alone, in the absence of extraordinary circumstances, is not a basis for necessity.

(d) With respect to reasonableness, a test program must exhibit a duration of reasonable length and affect a reasonable number of engines. In this regard, required items of information include:

(1) An estimate of the program's duration.

(2) The maximum number of marine engines involved.

(e) With respect to control, the test program must incorporate procedures consistent with the purpose of the test and be capable of affording EPA monitoring capability. As a minimum, required items of information include:

(1) The technical nature of the test;

(2) The site of the test;

(3) The duration and accumulated engine operation associated with the test;

(4) The ownership arrangement with regard to the engines involved in the test;

(5) The intended final disposition of the engines;

(6) The manner in which the engine identification numbers will be identified, recorded, and made available; and

(7) The means or procedure whereby test results will be recorded.

(f) A manufacturer of new marine SI engines may request a testing exemption to cover marine SI engines intended for use in test programs planned or anticipated over the course of a subsequent one-year period. Unless otherwise required by the Manager, Engine Compliance Programs Group, a manufacturer requesting such an exemption need only furnish the information required by paragraphs (a)(1) and (d)(2) of this section along with a description of the recordkeeping and control procedures that will be employed to assure that the engines are used for purposes consistent with section 91.1104(b).

§91.1006 Manufacturer-owned exemption and precertification exemption.

(a) Except as provided in paragraph (b) of this section, any manufacturer-owned marine SI engine, as defined by §91.1002, is exempt from compliance with §91.1103, without application, if the manufacturer complies with the following terms and conditions:

(1) The manufacturer must establish, maintain, and retain the following adequately organized and indexed information on each exempted engine:

(i) Engine identification number,

(ii) Use of the engine on exempt status and

(iii) Final disposition of any engine removed from exempt status.

(2) The manufacturer must provide right of entry and access to these records to EPA authorized representatives as outlined in §91.505.

(3) Unless the requirement is waived or an alternative procedure is approved by the Director, Engine Programs & Compliance Division, the manufacturer must permanently affix a label to each marine engine on exempt status. This label should:

(i) Be affixed in a readily visible portion of the engine,

(ii) Be attached in such a manner that it cannot be removed without destruction or defacement,

(iii) State in the English language/and in block letters and numerals of a color that contrasts with the background of the label, the following information:

(A) The label heading ''Emission Control Information;''

(B) Full corporate name and trademark of manufacturer;

(C) Engine displacement, engine family identification, and model year of engine; or person or office to be contacted for further information about the engine;

(D) The statement ''This marine SI engine is exempt from the prohibitions of 40 CFR 91.1103.''

(4) No provision of paragraph (a)(3) of this section prevents a manufacturer from including any other information it desires on the label.

§ 91.1007 Display exemption.

An uncertified marine SI engine is a display engine when it is to be used solely for display purposes, will only be operated incident and necessary to the display purpose, and will not be sold unless an applicable certificate of conformity has been received or the engine has been finally admitted pursuant to subpart H of this part. A display engine is exempt without application.

§ 91.1008 National security exemption.

(a)(1) Any marine SI engine, otherwise subject to this part, which is used in a vessel that exhibits substantial features ordinarily associated with military combat such as armor and/or permanently affixed weaponry and which will be owned and/or used by an agency of the Federal government with responsibility for national defense, will be exempt from these regulations for purposes of national security. No request for exemption is necessary.

(2) Manufacturers may request a national security exemption for any marine SI engine, otherwise subject to this part, which does not meet the conditions described in paragraph (a)(1) of this section. A manufacturer requesting a national security exemption must state the purpose for which the exemption is required and the request must be endorsed by an agency of the federal government charged with responsibility for national defense.

(b) EPA will maintain a list of models of marine SI engines (and the vessels which use them) that have been granted a national security exemption under paragraph (a)(2) of this section. This list will be available to the public and may be obtained by writing to the following address: Manager, Engine Compliance Programs Group 6403–J, Environmental Protection Agency, 1200 Pennsylvania Ave., NW., Washington, DC 20460.

§ 91.1009 Export exemptions.

(a) A new marine SI engine intended solely for export, and so labeled or tagged on the outside of the container and on the engine itself, is subject to the provisions of § 91.1103, unless the importing country has emission standards for new marine engines which differ from EPA standards.

(b) For the purpose of paragraph (a) of this section, a country having no standards, whatsoever, is deemed to be a country having emission standards which differ from EPA standards.

(c) EPA will maintain a list of foreign countries that have in force marine SI emission standards identical to U.S. EPA standards and have so notified EPA. This list may be obtained by writing to the following address: Manager, Engine Compliance Programs Group 6403–J, Environmental Protection Agency, 1200 Pennsylvania Ave., NW., Washington, DC 20460. New marine SI engines exported to such countries must comply with EPA certification regulations.

(d) It is a condition of any exemption for the purpose of export under § 91.1004(b) that such exemption be void *ab initio* with respect to a new marine SI engine intended solely for export if such marine SI engine is sold, or offered for sale, to an ultimate purchaser in the United States for purposes other than export.

§ 91.1010 Granting of exemptions.

(a) If upon completion of the review of an exemption request made pursuant to § 91.1005 or § 91.1008, EPA determines

it is appropriate to grant such an exemption, a memorandum of exemption will be prepared and submitted to the person requesting the exemption. The memorandum shall set forth the basis for the exemption, its scope, and such terms and conditions as are deemed necessary. Such terms and conditions shall generally include, but are not limited to, agreements by the applicant to conduct the exempt activity in the manner described to EPA, create and maintain adequate records accessible to EPA at reasonable times, employ labels for the exempt engines setting forth the nature of the exemption, take appropriate measures to assure that the terms of the exemption are met, and advise EPA of the termination of the activity and the ultimate disposition of the engines.

(b) Any exemption granted pursuant to paragraph (a) of this section is deemed to cover any subject engine only to the extent that the specified terms and conditions are complied with. A breach of any term or condition causes the exemption to be void *ab initio* with respect to any engine. Consequently, the causing or the performing of an act prohibited under §91.1103(a) (1) or (3), other than in strict conformity with all terms and conditions of this exemption renders the person to whom the exemption is granted, and any other person to whom the provisions of §91.1103 are applicable, liable under sections 204 and 205 of the Act.

§91.1011 Submission of exemption requests.

Requests for exemption or further information concerning exemptions and/or the exemption request review procedure should be addressed to: Manager, Engine Compliance Programs Group 6403J, Environmental Protection Agency, 1200 Pennsylvania Ave., NW., Washington, DC 20460.

§91.1012 Treatment of confidential information.

The provisions for treatment of confidential information described in §91.7 apply to this subpart.

§91.1013 Exemption for certified Small SI engines.

The provisions of 40 CFR 1045.605 and 1045.610 apply for engines subject to the standards of this part 91. This generally allows manufacturers to use marine engines that have been certified to emission standards for nonroad spark-ignition engines below 19 kW without recertifying those engines under this part 91.

[73 FR 59183, Oct. 8, 2008]

Subpart L—Prohibited Acts and General Enforcement Provisions

§91.1101 Applicability.

The requirements of subpart L are applicable to all marine engines and vessels subject to the provisions of subpart A of this part 91.

§91.1102 Definitions.

The definitions in subpart A of this part apply to this subpart. All terms not defined herein or in subpart A have the meaning given them in the Act.

§91.1103 Prohibited acts.

(a) The following acts and the causing thereof are prohibited:

(1)(i) In the case of a manufacturer of new marine SI engines or vessels for distribution in commerce, the sale, the offering for sale, or the introduction, or delivery for introduction, into commerce, of any new marine SI engine manufactured after the applicable effective date under this part unless such engine is covered by a certificate of conformity issued (and in effect) under regulations found in this part.

(ii) In the case of any person, except as provided by regulation of the Administrator, the importation into the United States of any new marine SI engine manufactured after the applicable effective date under this part unless such engine is covered by a certificate of conformity issued (and in effect) under regulations found in this part.

(2)(i) For a person to fail or refuse to permit access to or copying of records or to fail to make reports or provide information required under §91.1104.

(ii) For a person to fail or refuse to permit entry, testing or inspection authorized under §91.118, 91.505 or 91.1104.

(iii) For a person to fail or refuse to perform tests, or to have tests performed as required under § 91.118 or § 91.1104.

(iv) For a person to fail to establish or maintain records as required under § 91.1104.

(3)(i) For a person to remove or render inoperative a device or element of design installed on or in a marine engine in compliance with regulations under this part prior to its sale and delivery to the ultimate purchaser, or for a person knowingly to remove or render inoperative such a device or element of design after the sale and delivery to the ultimate purchaser; or

(ii) For a person to manufacture, sell or offer to sell, or install, a part or component intended for use with, or as part of, a marine SI engine, where a principal effect of the part or component is to bypass, defeat, or render inoperative a device or element of design installed on or in a marine SI engine in compliance with regulations issued under this part, and where the person knows or should know that the part or component is being offered for sale or installed for this use or put to such use.

(4) For a manufacturer of a new marine SI engine subject to standards prescribed under this part:

(i) To sell, offer for sale, or introduce or deliver into commerce, a marine SI engine unless the manufacturer has complied with the requirements of § 91.1203.

(ii) To sell, offer for sale, or introduce or deliver into commerce, a marine SI engine unless a label or tag is affixed to the engine in accordance with regulations under this part.

(iii) To provide directly or indirectly in any communication to the ultimate purchaser or a subsequent purchaser that the coverage of a warranty under the Act is conditioned upon use of a part, component, or system manufactured by the manufacturer or a person acting for the manufacturer or under its control, or conditioned upon service performed by such persons, except as provided in subpart M of this part.

(iv) To fail or refuse to comply with the terms and conditions of the warranty under subpart M of this part.

(5) For a manufacturer of new marine vessels or equipment to distribute in commerce, sell, offer for sale, or introduce into commerce, marine vessels or equipment which contain an engine not covered by a certificate of conformity.

(b) For the purposes of enforcement of this part, the following apply:

(1) Nothing in paragraph (a) of this section is to be construed to require the use of manufacturer parts in maintaining or repairing a marine SI engine.

(2) Actions for the purpose of repair or replacement of a device or element of design or any other item are not considered prohibited acts under § 91.1103(a) if the actions are a necessary and temporary procedure, the device or element is replaced upon completion of the procedure, and the action results in the proper functioning of the device or element of design.

(3) The following provisions apply for converting marine SI engines to use alternative fuels:

(i) Until December 31, 2009, converting an engine to use a clean alternative fuel (as defined in Title II of the Act) is not considered a prohibited act under paragraph (a) of this section if the engine complies with the applicable standard when operating on the alternative fuel. Also, in the case of engines converted to dual fuel or flexible use, the action must result in the proper functioning of the engine when it operates on conventional fuel.

(ii) The provisions of 40 CFR 1045.645 apply starting January 1, 2010.

(4) A new marine spark-ignition engine intended solely to replace an engine in an outboard engine, or other engine to which this part is applicable as determined by §§ 91.1, 91.101, 91.106 that was originally produced with an engine manufactured prior to the applicable implementation date as described in §§ 91.2, and 91.106 and 91.205(a)(1), or that was originally produced in a model year in which less stringent emission standards under this part were in effect shall not be subject to the requirements of § 91.106 or the prohibitions of paragraph (a)(1) of this section provided that:

(i) The engine manufacturer has ascertained that no engine produced by

itself or the manufacturer of the engine that is being replaced, if different, and certified to the requirements of this subpart, is available with the appropriate physical or performance characteristics to repower the outboard, personal watercraft or jetboat; and

(ii) Unless an alternative control mechanism is approved in advance by the Administrator, the engine manufacturer or its agent takes ownership and possession of the engine being replaced; and

(iii) The replacement engine is clearly labeled with the following language, or similar alternate language approved in advance by the Administrator:

This engine does not comply with Federal nonroad or on-highway emission requirements. Sale or installation of this engine for any purpose other than as a replacement engine in a marine vessel whose original engine was not certified, or was certified to less stringent emission standards than those that apply to the year of manufacture of this engine, is a violation of Federal law subject to civil penalty; and

(iv) Where the replacement engine is intended to replace an engine built after the applicable implementation date as described in §§91.2, 91.106 and 91.205(a)(1), but built to less stringent emission standards than are currently applicable, the replacement engine shall be identical in all material respects to a certified configuration of the same or later model year as the engine being replaced; and

(v) In cases where an engine is to be imported for replacement purposes under the provisions of this paragraph (b)(4), the term ''engine manufacturer'' does not apply to an individual or other entity that does not possess a current Certificate of Conformity issued by EPA under this part.

[61 FR 52102, Oct. 4, 1996, as amended at 62 FR 42644, Aug. 7, 1997; 65 FR 24314, Apr. 25, 2000; 73 FR 59183, Oct. 8, 2008]

§91.1104 General enforcement provisions.

(a) *Information collection provisions.* (1) Every manufacturer of new marine SI engines and other persons subject to the requirements of this part must establish and maintain records, perform tests where such testing is not otherwise reasonably available under this part, make reports and provide information the Administrator may reasonably require to determine whether the manufacturer or other person has acted or is acting in compliance with this part or to otherwise carry out the provisions of this part, and must, upon request of an officer or employee duly designated by the Administrator, permit the officer or employee at reasonable times to have access to and copy such records.

(2) For purposes of enforcement of this part, an officer or employee duly designated by the Administrator, upon presenting appropriate credentials, is authorized:

(i) To enter, at reasonable times, any establishment of the manufacturer, or of any person whom the manufacturer engaged to perform any activity required under paragraph (a)(1) of this section, for the purposes of inspecting or observing any activity conducted pursuant to paragraph (a)(1) of this section, and

(ii) To inspect records, files, papers, processes, controls, and facilities used in performing an activity required by paragraph (a)(1) of this section, by the manufacturer or by a person whom the manufacturer engaged to perform the activity.

(b) *Exemption provision.* The Administrator may exempt a new marine engine from compliance with §91.1103 upon such terms and conditions as the Administrator may find necessary for the purpose of export, research, investigations, studies, demonstrations, or training, or for reasons of national security.

(c) *Importation provision.* (1) A new marine SI engine, or vessel offered for importation or imported by a person in violation of §91.1103 shall be refused admission into the United States, but the Secretary of the Treasury and the Administrator may, by joint regulation, provide for deferring a final determination as to admission and authorizing the delivery of such a marine SI engine offered for import to the owner or consignee thereof upon such terms and conditions (including the furnishing of a bond) as may appear to them appropriate to insure that the marine SI engine will be brought into conformity

with the standards, requirements, and limitations applicable to it under this part.

(2) If a marine SI engine is finally refused admission under this paragraph, the Secretary of the Treasury shall cause disposition thereof in accordance with the customs laws unless it is exported, under regulations prescribed by the Secretary, within 90 days of the date of notice of the refusal or additional time as may be permitted pursuant to the regulations.

(3) Disposition in accordance with the customs laws may not be made in such manner as may result, directly or indirectly, in the sale, to the ultimate consumer, of a new marine SI engine that fails to comply with applicable standards of the Administrator under this part.

(d) *Export provision*. A new marine SI engine intended solely for export, and so labeled or tagged on the outside of the container and on the engine itself, shall be subject to the provisions of § 91.1103, except that if the country that is to receive the engine has emission standards that differ from the standards prescribed under subpart B of this part, then the engine must comply with the standards of the country that is to receive the engine.

§ 91.1105 Injunction proceedings for prohibited acts.

(a) The district courts of the United States have jurisdiction to restrain violations of § 91.1103.

(b) Actions to restrain such violations must be brought by and in the name of the United States. In an action, subpoenas for witnesses who are required to attend a district court in any district may run into any other district.

§ 91.1106 Penalties.

(a) *Violations*. A violation of the requirements of this subpart is a violation of the applicable provisions of the Act, including sections 203 and 213(d), and is subject to the penalty provisions thereunder.

(1) A person who violates § 91.1103 (a)(1), (a)(4), or (a)(5), or a manufacturer or dealer who violates § 91.1103(a)(3)(i), is subject to a civil penalty of not more than $32,500 for each violation.

(2) A person other than a manufacturer or dealer who violates § 91.1103(a)(3)(i) or any person who violates § 91.1103(a)(3)(ii) is subject to a civil penalty of not more than $2,750 for each violation.

(3) A violation with respect to § 91.1103 (a)(1), (a)(3)(i), (a)(4), or (a)(5) constitutes a separate offense with respect to each marine SI engine.

(4) A violation with respect to § 91.1103(a)(3)(ii) constitutes a separate offense with respect to each part or component. Each day of a violation with respect to § 91.1103(a)(6) constitutes a separate offense.

(5) A person who violates § 91.1103 (a)(2) or (a)(6) is subject to a civil penalty of not more than $32,500 per day of violation.

(6) The maximum penalty values listed in this section are shown for calendar year 2004. Maximum penalty limits for later years may be adjusted based on the Consumer Price Index. The specific regulatory provisions for changing the maximum penalties, published in 40 CFR part 19, reference the applicable U.S. Code citation on which the prohibited action is based.

(b) *Civil actions*. The Administrator may commence a civil action to assess and recover any civil penalty under paragraph (a) of this section.

(1) An action under this paragraph may be brought in the district court of the United States for the district in which the violation is alleged to have occurred or in which the defendant resides or has the Administrator's principal place of business, and the court shall have jurisdiction to assess a civil penalty.

(2) In determining the amount of a civil penalty to be assessed under this paragraph, the court is to take into account the gravity of the violation, the economic benefit or savings (if any) resulting from the violation, the size of the violator's business, the violator's history of compliance with Title II of the Act, action taken to remedy the violation, the effect of the penalty on the violator's ability to continue in business, and such other matters as justice may require.

(3) In any such action, subpoenas for witnesses who are required to attend a district court in any district may run into any other district.

(c) *Administrative assessment of certain penalties*—(1) Administrative penalty authority. In lieu of commencing a civil action under paragraph (b) of this section, the Administrator shall assess any civil penalty prescribed in paragraph (a) of this section, except that the maximum amount of penalty sought against each violator in a penalty assessment proceeding can not exceed $270,000, unless the Administrator and the Attorney General jointly determine that a matter involving a larger penalty amount is appropriate for administrative penalty assessment. Any such determination by the Administrator and the Attorney General is not subject to judicial review. Assessment of a civil penalty is made by an order made on the record after opportunity for a hearing held in accordance with the procedures found at part 22 of this chapter. The Administrator may compromise, or remit, with or without conditions, any administrative penalty which may be imposed under this section.

(2) *Determining amount*. In determining the amount of any civil penalty assessed under this subsection, the Administrator is to take into account the gravity of the violation, the economic benefit or savings (if any) resulting from the violation, the size of the violator's business, the violator's history of compliance with Title II of the Act, action taken to remedy the violation, the effect of the penalty on the violator's ability to continue in business, and such other matters as justice may require.

(3) *Effect of administrator's action*. (i) Action by the Administrator under this paragraph does not affect or limit the Administrator's authority to enforce any provisions of this part; except that any violation with respect to which the Administrator has commenced and is diligently prosecuting an action under this part, or for which the Administrator has issued a final order not subject to further judicial review and for which the violator has paid a penalty assessment under this part may not be the subject of a civil penalty action under paragraph (b) of this section.

(ii) No action by the Administrator under this part affects a person's obligation to comply with a section of this part.

(4) *Finality of order*. An order issued under this subsection is to become final 30 days after its issuance unless a petition for judicial review is filed under paragraph (c)(5) of this section.

(5) *Judicial review*. (i) A person against whom a civil penalty is assessed in accordance with this subsection may seek review of the assessment in the United States District Court for the District of Columbia or for the district in which the violation is alleged to have occurred, in which such person resides, or where the person's principle place of business is located, within the 30-day period beginning on the date a civil penalty order is issued. The person must simultaneously send a copy of the filing by certified mail to the Administrator and the Attorney General.

(ii) The Administrator must file in the court within 30 days a certified copy, or certified index, as appropriate, of the record on which the order was issued. The court is not to set aside or remand any order issued in accordance with the requirements of this paragraph unless substantial evidence does not exist in the record, taken as a whole, to support the finding of a violation or unless the Administrator's assessment of the penalty constitutes an abuse of discretion, and the court is not to impose additional civil penalties unless the Administrator's assessment of the penalty constitutes an abuse of discretion. In any proceedings, the United States may seek to recover civil penalties assessed under this section.

(6) *Collection*. (i) If any person fails to pay an assessment of a civil penalty imposed by the Administrator as provided in this part after the order making the assessment has become final or after a court in an action brought under paragraph (c)(5) of this section has entered a final judgment in favor of the Administrator, the Administrator is to request that the Attorney General bring a civil action in an appropriate district court to recover the amount

assessed (plus interest at rates established pursuant to section 6621(a)(2) of the Internal Revenue Code of 1986 from the date of the final order or the date of final judgment, as the case may be). In such an action, the validity, amount, and appropriateness of the penalty is not subject to review.

(ii) A person who fails to pay on a timely basis the amount of an assessment of a civil penalty as described in paragraph (c)(6)(i) of this section is required to pay, in addition to that amount and interest, the United States' enforcement expenses, including attorney's fees and costs for collection proceedings, and a quarterly nonpayment penalty for each quarter during which the failure to pay persists. The nonpayment penalty is an amount equal to 10 percent of the aggregate amount of that person's penalties and nonpayment penalties which are unpaid as of the beginning of such quarter.

[61 FR 52102, Oct. 4, 1996, as amended at 70 FR 40452, July 13, 2005]

§ 91.1107 Warranty provisions.

(a) The manufacturer of each marine SI engine must warrant to the ultimate purchaser and each subsequent purchaser that the engine is designed, built, and equipped so as to conform at the time of sale with applicable regulations under section 213 of the Act, and is free from defects in materials and workmanship which cause such engine to fail to conform with applicable regulations for its warranty period (as determined under § 91.1203).

(b) In the case of an engine part, the manufacturer or rebuilder of the part may certify according to § 85.2112 of this chapter that use of the part will not result in a failure of the engine to comply with emission standards promulgated in this part.

(c) For the purposes of this section, the owner of any engine warranted under this part is responsible for the proper maintenance of the engine. Proper maintenance includes replacement and service, at the owner's expense at a service establishment or facility of the owner's choosing, such items as spark plugs, points, condensers, and any other part, item, or device related to emission control (but not designed for emission control) under the terms of the last sentence of section 207(a)(3) of the Act, unless such part, item, or device is covered by any warranty not mandated by this Act.

§ 91.1108 In-use compliance provisions.

(a) Effective with respect to marine engine and vessels manufactured during model years 1997 and after:

(1) If the Administrator determines that a substantial number of any class or category of engines, although properly maintained and used, do not conform to the regulations prescribed under section 213 of the Act when in actual use throughout their useful life (as defined under § 91.105(a)), the Administrator shall immediately notify the manufacturer of such nonconformity and require the manufacturer to submit a plan for remedying the nonconformity of the engines with respect to which such notification is given.

(i) The manufacturer's plan shall provide that the nonconformity of any such engines which are properly used and maintained will be remedied at the expense of the manufacturer.

(ii) If the manufacturer disagrees with such determination of nonconformity and so advises the Administrator, the Administrator shall afford the manufacturer and other interested persons an opportunity to present their views and evidence in support thereof at a public hearing. Unless, as a result of such hearing, the Administrator withdraws such determination of nonconformity, the Administrator shall, within 60 days after the completion of such hearing, order the manufacturer to provide prompt notification of such nonconformity in accordance with paragraph (a)(2) of this section. The manufacturer shall comply in all respects with the requirements of subpart I of this part.

(2) Any notification required to be given by the manufacturer under paragraph (a)(1) of this section with respect to any class or category of engines shall be given to dealers, ultimate purchasers, and subsequent purchasers (if known) in such manner and containing such information as required in subparts I and J of this part.

(3)(i) The manufacturer shall furnish with each new engine written instructions for the proper maintenance and use of the engine by the ultimate purchaser as required under §91.1204. The manufacturer shall provide in boldface type on the first page of the written maintenance instructions notice that maintenance, replacement, or repair of the emission control devices and systems may be performed by any engine repair establishment or individual using any engine part which has been certified as provided in §91.1107(b).

(ii) The instruction under paragraph (a)(3)(i) of this section must not include any condition on the ultimate purchaser's using, in connection with such engine, any component or service (other than a component or service provided without charge under the terms of the purchase agreement) which is identified by brand, trade, or corporate name. Subject instructions also must not directly or indirectly distinguish between service performed by the franchised dealers of such manufacturer, or any other service establishments with which such manufacturer has a commercial relationship, and service performed by independent engine repair facilities with which such manufacturer has no commercial relationship.

(iii) The prohibition of paragraph (a)(3)(ii) of this section may be waived by the Administrator if:

(A) The manufacturer satisfies the Administrator that the engine will function properly only if the component or service so identified is used in connection with such engine, and

(B) The Administrator finds that such a waiver is in the public interest.

(iv) In addition, the manufacturer shall indicate by means of a label or tag permanently affixed to the engine that the engine is covered by a certificate of conformity issued for the purpose of assuring achievement of emission standards prescribed under section 213 of the Act. This label or tag shall also contain information relating to control of emissions as prescribed under §91.113.

(b) The manufacturer bears all cost obligation a dealer incurs as a result of a requirement imposed by paragraph (a) of this section. The transfer of any such cost obligation from a manufacturer to a dealer through franchise or other agreement is prohibited.

(c) If a manufacturer includes in an advertisement a statement respecting the cost or value of emission control devices or systems, the manufacturer shall set forth in the statement the cost or value attributed to these devices or systems by the Secretary of Labor (through the Bureau of Labor Statistics). The Secretary of Labor, and his or her representatives, has the same access for this purpose to the books, documents, papers, and records of a manufacturer as the Comptroller General has to those of a recipient of assistance for purposes of section 311 of the Act.

(d) Any inspection of an engine for purposes of paragraph (a)(1) of this section, after its sale to the ultimate purchaser, is to be made only if the owner of such vehicle or engine voluntarily permits such inspection to be made, except as may be provided by any state or local inspection program.

Subpart M—Emission Warranty and Maintenance Instructions

§91.1201 Applicability.

The requirements of this subpart M are applicable to all engines subject to the provisions of subpart A of this part 91.

§91.1202 Definitions.

The definitions of subpart A of this part apply to this subpart.

§91.1203 Emission warranty, warranty period.

(a) Warranties imposed by this subpart shall be phased in according to the following schedule.

(1) For model years 1998–2000, and for MY 1997 engine families certified pursuant to §91.205, all emission related components shall be warranted for a period of one year of engine use.

(2) For model years 2001–2003:

(i) Emission related components shall be warranted for a period of one year of engine use.

(ii) Specified major emission control components shall be warranted for a period of three years or 200 hours of engine use, whichever occurs first.

(3) For model years 2004 and beyond:

(i) Emission-related components shall be warranted for a period of two years or 200 hours of engine use, whichever occurs first.

(ii) Specified major emission control components shall be warranted for a period of three years or 200 hours of engine use, whichever occurs first.

(b) The manufacturer of each new marine SI engine must warrant to the ultimate purchaser and each subsequent purchaser, that the engine is designed, built, and equipped so as to conform at the time of sale with applicable regulations under section 213 of the Act, and the engine is free from defects in materials and workmanship which cause such engine to fail to conform with applicable regulations for its warranty period.

(c) In the case of a marine SI engine part, the manufacturer or rebuilder of the part may certify according to § 85.2112 ot this chapter that use of the part will not result in a failure of the engine to comply with emission standards promulgated in this part.

(d) For the purposes of this section, the owner of any marine SI engine warranted under this part is responsible for the proper maintenance of the engine as stated in the manufacturer's written instructions. Proper maintenance generally includes replacement and service, at the owner's expense at a service establishment or facility of the owner's choosing, such items as spark plugs, points, condensers, and any other part, item, or device related to emission control (but not designed for emission control) under the terms of the last sentence of section 207(a)(3) of the Act, unless such part, item, or device is covered by any warranty not mandated by this Act.

§ 91.1204 Furnishing of maintenance and use instructions to ultimate purchaser.

(a) The manufacturer must furnish or cause to be furnished to the ultimate purchaser of each new marine SI engine written instructions for the maintenance and use needed to assure proper functioning of the emission control system.

(b) The manufacturer must provide in boldface type on the first page of the written maintenance instructions notice that maintenance, replacement, or repair of the emission control devices and systems may be performed by any marine SI engine repair establishment or individual.

(c) The instructions under paragraph (a) of this section will not include any condition on the ultimate purchaser's using, in connection with such engine, any component or service (other than a component or service provided without charge under the terms of the purchase agreement) which is identified by brand, trade, or corporate name. Such instructions also will not directly or indirectly distinguish between service performed by the franchised dealers of such manufacturer or any other service establishments with which such manufacturer has a commercial relationship and service performed by independent marine engine repair facilities which such manufacturer has no commercial relationship.

(d) The prohibition of paragraph (c) of this section may be waived by the Administrator if:

(1) The manufacturer satisfies the Administrator that the engine will function properly only if the component or service so identified is used in connection with such engine, and

(2) The Administrator finds that such a waiver is in the public interest.

Subpart N—In-Use Credit Program for New Marine Engines

§ 91.1301 Applicability.

Marine SI engines subject to the provisions of subpart A of this part 91 are eligible to participate in the in-use credit program described in this subpart.

§ 91.1302 Definitions.

The definitions in subpart A of this part apply to this subpart. The following definitions shall also apply to this subpart:

Averaging means the exchange of marine engine in-use emission credits among engine families within a given manufacturer's product line.

Banking means the retention of marine engine in-use emission credits by the manufacturer generating the emission credits for use in future model

year averaging or trading as permitted by these regulations.

Carry-over engine family means an engine family which undergoes certification using carryover test data from previous model years. See §91.118(c).

Emission credits or in-use credits represent the amount of emission reduction or exceedance, for each regulated pollutant, by a marine engine family below or above, respectively, the applicable certification family emission limit (FEL) to which the engine family is certified. Emission reductions below the FEL are considered ''positive credits,'' while emission exceedances above the FEL are considered ''negative or required credits.''

Banked credits refer to positive emission credits based on actual applicable production/sales volume as contained in the end of model year in-use testing reports submitted to EPA. Some or all of these banked credits may be revoked if EPA review of the end of model year in-use testing reports or any subsequent audit action(s) uncovers problems or errors.

Trading means the exchange of marine SI engine in-use emission credits between manufacturers and/or brokers.

Compliance level for an engine family is determined by averaging the in-use test results from each engine.

§91.1303 General provisions.

(a) The in-use credit program for eligible marine engines is described in this subpart. Participation in this program is voluntary.

(b) A marine SI engine family is eligible to participate in the in-use credit program if it is subject to regulation under subpart B of this part with certain exceptions specified in paragraph (c) of this section.

(c) Marine SI engines may not participate in the in-use averaging, banking, and trading program if they are delivered to a ''point of first retail sale'' outside of the U.S., as defined in §91.202.

(d) Credits generated and used in the marine engine certification averaging, banking, and trading program pursuant to the provisions of subpart C of this part are not interchangeable with credits generated and used in the marine engine in-use credit program.

(e) An engine family with a compliance level, as determined by in-use testing pursuant to subpart I of this part and paragraph (h) of this section, below the applicable FEL to which the engine family is certified may generate emission credits for averaging, banking, or trading in the in-use credit program.

(f) Positive credits generated in a given model year may be used in that model year and/or in any subsequent model year.

(g) A manufacturer of an engine family with a compliance level exceeding the applicable FEL to which the engine family is certified, may, prior to the date of the report required under paragraph (j) of this section use previously banked credits, purchase credits from another manufacturer, or perform additional testing pursuant to paragraph (i) of this section to address (as calculated elsewhere in this subpart) the associated credit deficit (negative credits or a need for credits).

(h) A manufacturer may carry-over an in-use credit deficit up to and including model year 2003. Beginning with model year 2004, all manufacturers must have a zero or positive credit balance.

(i) A manufacturer must notify EPA of plans to test additional engine families beyond the maximum 25 percent required in subpart I of this part for the in-use testing program. Such notice must be submitted 30 days prior to initiation of service accumulation. EPA may approve, with adequate justification, the use of an existing fleet for additional testing. If the additional testing discovers an engine family to be in noncompliance with the applicable FEL, the testing must be treated as if it were a failure of the normal in-use testing requirement of an engine family.

(j) Manufacturers must demonstrate a zero or positive credit balance under the in-use credit program for a particular model year within 90 days of the end of the in-use testing of that model year's engine families, or at the same time as the final certification AB&T report (required under §91.210), whichever is later.

§ 91.1304 Averaging.

(a) A manufacturer may use averaging across engine families to demonstrate a zero or positive credit balance for a model year. Positive credits to be used in averaging may be obtained from credits generated by another engine family of the same model year, credits banked in previous model years, or credits obtained through trading.

(b) Beginning in model year 2004, credits used to demonstrate a zero or positive credit balance must be used at a rate of 1.1 to 1.

§ 91.1305 Banking.

(a) A manufacturer of a marine SI engine family with an in-use compliance level below the applicable FEL to which the engine family is certified for a given model year may bank positive in-use credits for that model year for use in in-use averaging and trading.

(b) A manufacturer may consider credits banked 30 days after the submission of the report required by § 91.1309(a). During the 30 day period EPA will work with the manufacturer to correct any error in calculating banked credits, if necessary.

§ 91.1306 Trading.

(a) A marine engine manufacturer may exchange positive in-use emission credits with other marine engine manufacturers through trading.

(b) In-use credits for trading can be obtained from credits banked for model years prior to the model year of the engine family requiring in-use credits.

(c) Traded in-use credits can be used for averaging, banking, or further trading transactions.

(d) Unless otherwise approved by EPA, a manufacturer that generates positive in-use credits must wait 30 days after it has both completed in-use testing for the model year for which the credits were generated and submitted the report required by § 91.1309(a) before it may transfer credits to another manufacturer or broker.

(e) In the event of a negative credit balance resulting from a transaction, both the buyer and the seller are liable, except in cases involving fraud. Engine families participating in a negative trade may be subject to recall under subpart I of this part.

§ 91.1307 Credit calculation.

For each participating engine family, emission credits (positive or negative) are to be calculated according to the following equation and rounded, in accordance with ASTM E29–93a, to the nearest gram. ASTM E29–93a has been incorporated by reference. See § 91.6. Consistent units are to be used throughout the equation. The following equation is used to determine the credit status for an engine family whether generating positive or negative in-use emission credits:

$$\sum_{t=1}^{\text{max useful life}} \frac{S(t) \times \text{sales} \times (\text{FEL} - \text{CL}) \times \text{Power} \times \text{AF} \times 0.207 \times \mu_{\text{use}}}{1.03^{t}}$$

Where:

S(t)=cumulative fraction survived at time t;

μ_{life}=average useful life in years, specific to the power rating and the application as given below.

Engine type	(μ_{life})
Outboard	$41.27 \times \left(\frac{\text{Power}}{0.746}\right)^{-0.204}$
Personal Watercraft	10

Power = the average power of an engine family in kW (sales weighted). The power of each configuration is the rated output in

kilowatts as determined by SAE J1228. This procedure has been incorporated by reference. See § 91.6.

t = time in model years

max useful life = maximum useful life specific to the power rating and the application; max useful life = $2\mu_{life}$

sales = the number of eligible sales tracked to the point of first retail sale in the U.S. for the given engine family during the model year.

FEL = the family emission limit for the engine family in grams per kilowatt hour.

CL = compliance level of the in-use testing in g/kW-hr.

μ_{use} = mean use in hours per year. For outboard engines, μ_{use}=34.8 hrs /yr. For personal watercraft, μ_{use}=77.3 hrs/yr;

AF = adjustment factor for the number of tests conducted

No. eng. tested	2*, 4	6	8	10
Adjustment factor	.5	.75	.9	1

* Small volume manufacturer

§ 91.1308 Maintenance of records.

(a) Any manufacturer that is participating in the in-use credit program set forth in this subpart shall establish, maintain, and retain the records required by § 91.209 with respect to its participation in the in-use credit program.

(b) EPA may void *ab initio* a certificate of conformity for an engine family for which the manufacturer fails to retain the records required under this section or to provide such information to the Administrator upon request.

§ 91.1309 Reporting requirements.

(a) Any manufacturer who participates in the in-use credit program is required to submit an end of the model year in-use testing report either within 90 days of the end of the model year in-use testing of a given model year's engine families, or at the same time as the final certification AB&T report (required under § 91.210), whichever is later. The end of the model year in-use testing report must contain the required information and show the calculated credits from all the in-use testing conducted by the manufacturer for a given model year.

(b) Reports shall be submitted to: Manager, Engine Compliance Programs Group 6403–J, U.S. Environmental Protection Agency, 1200 Pennsylvania Ave., NW., Washington, DC 20460.

(c) A manufacturer that fails to submit a timely report as required in paragraph (a) of this section will be considered to not have participated in the in-use credit program.

(d) If EPA or the manufacturer determines that a reporting error occurred on an end of model year report previously submitted to EPA under this subpart, or an engine family in-use testing report submitted to EPA under subpart I, the manufacturer's credits and credit calculations will be recalculated. Erroneous positive credits will be void. Erroneous negative credits may be adjusted by EPA. An update of previously submitted ''point of first retail sale'' information is not considered an error and no increase in the number of credits will be allowed unless an actual error occurred in the calculation of credits due to an error in the ''point of first retail sale'' information from the time of the original end of model year report.

§ 91.1310 Notice of opportunity for hearing.

Any voiding of an engine family's certificate of conformity under § 91.1308(b) of this subpart will occur only after the manufacturer concerned has been offered an opportunity for a hearing conducted in accordance with §§ 91.512, 91.513, 91.514 and 91.515.

PART 92—CONTROL OF AIR POLLUTION FROM LOCOMOTIVES AND LOCOMOTIVE ENGINES

Subpart A—General Provisions for Emission Regulations for Locomotives and Locomotive Engines

Sec.

92.1 Applicability.
92.2 Definitions.
92.3 Abbreviations.
92.4 Treatment of confidential information.
92.5 Reference materials.
92.6 Regulatory structure.
92.7 General standards.
92.8 Emission standards.
92.9 Compliance with emission standards.
92.10 Warranty period.
92.11 Compliance with emission standards in extraordinary circumstances.
92.12 Interim provisions.