AUTHENTICATED
U.S. GOVERNMENT
INFORMATION
GPO

FIGURE 1. CONFIGURATION REQUIREMENTS

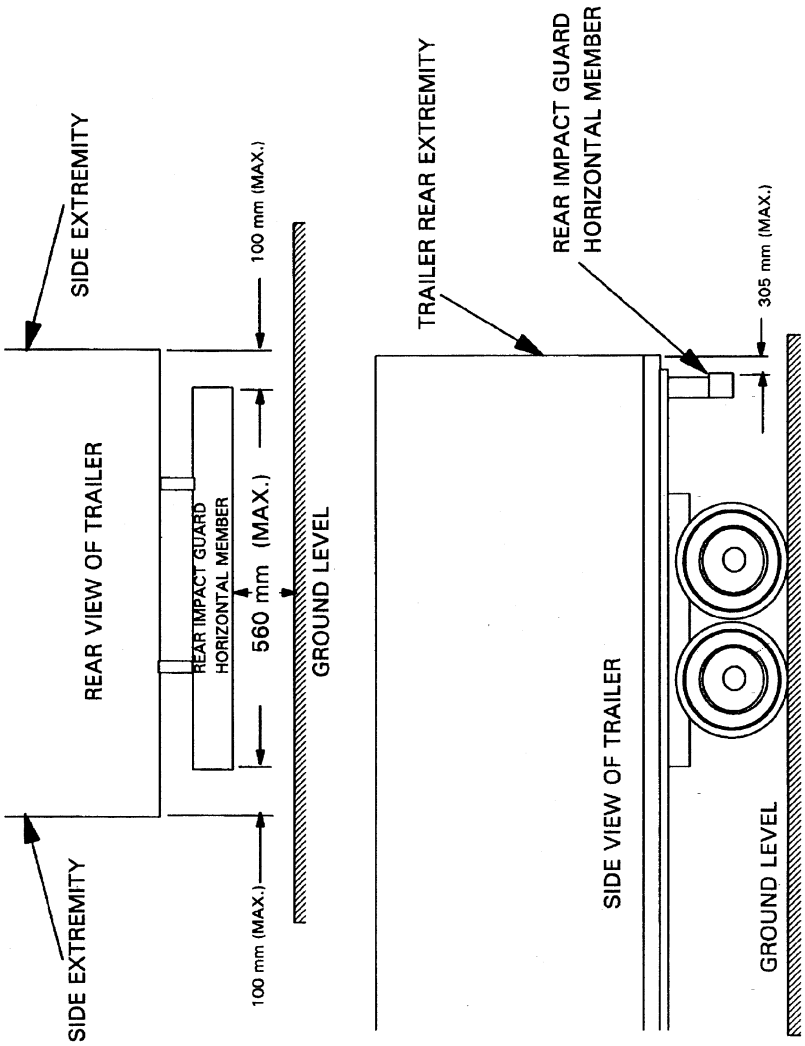

[61 FR 2035, Jan. 24, 1996, as amended at 63 FR 3662, Jan. 26, 1998; 69 FR 64500, Nov. 5, 2004; 69 FR 67668, Nov. 19, 2004; 71 FR 9277, Feb. 23, 2006]

§ 571.225 Standard No. 225; Child restraint anchorage systems.

S1. *Purpose and scope.* This standard establishes requirements for child restraint anchorage systems to ensure their proper location and strength for the effective securing of child restraints, to reduce the likelihood of the anchorage systems' failure, and to increase the likelihood that child restraints are properly secured and thus more fully achieve their potential effectiveness in motor vehicles.

S2. *Application.* This standard applies to passenger cars; to trucks and multipurpose passenger vehicles with a gross vehicle weight rating (GVWR) of 3,855 kilograms (8,500 pounds) or less; and to

buses (including school buses) with a GVWR of 4,536 kg (10,000 lb) or less. This standard does not apply to walk-in van-type vehicles, vehicles manufactured to be sold exclusively to the U.S. Postal Service, shuttle buses, and funeral coaches.

S3. *Definitions.*

Child restraint anchorage means any vehicle component, other than Type I or Type II seat belts, that is involved in transferring loads generated by a child restraint system to the vehicle structure.

Child restraint anchorage system means a vehicle system that is designed for attaching a child restraint system to a vehicle at a particular designated seating position, consisting of:

(a) Two lower anchorages meeting the requirements of S9; and

(b) A tether anchorage meeting the requirements of S6.

Child restraint fixture (CRF) means the fixture depicted in Figures 1 and 2 of this standard that simulates the dimensions of a child restraint system, and that is used to determine the space required by the child restraint system and the location and accessibility of the lower anchorages.

Funeral coach means a vehicle that contains only a front row of occupant seats, is designed exclusively for transporting a body and casket and that is equipped with features to secure a casket in place during operation of the vehicle.

Rear designated seating position means any designated seating position (as that term is defined at §571.3) that is rearward of the front seats(s).

Seat bight means the area close to and including the intersection of the surfaces of the vehicle seat cushion and the seat back.

SFAD 1 means Static Force Application Device 1 shown in Figures 12 to 16 of this standard.

SFAD 2 means Static Force Application Device 2 shown in Figures 17 and 18 of this standard.

Shuttle bus means a bus with only one row of forward-facing seating positions rearward of the driver's seat.

Tether anchorage means a user-ready, permanently installed vehicle system that transfers loads from a tether strap through the tether hook to the vehicle structure and that accepts a tether hook.

Tether strap means a strap that is secured to the rigid structure of the seat back of a child restraint system, and is connected to a tether hook that transfers the load from that system to the tether anchorage.

Tether hook means a device, illustrated in Figure 11 of Standard No. 213 (§571.213), used to attach a tether strap to a tether anchorage.

S4. *General vehicle requirements.*

S4.1 Each tether anchorage and each child restraint anchorage system installed, either voluntarily or pursuant to this standard, in any new vehicle manufactured on or after September 1, 1999, shall comply with the configuration, location, marking and strength requirements of this standard. The vehicle shall be delivered with written information, in English, on how to appropriately use those anchorages and systems.

S4.2 For passenger cars manufactured on or after September 1, 1999 and before September 1, 2000, not less than 80 percent of the manufacturer's average annual production of vehicles (not including convertibles), as set forth in S13, shall be equipped with a tether anchorage as specified in paragraphs (a), (b) and (c) of S4.2, except as provided in S5.

(a) Each vehicle with three or more forward-facing rear designated seating positions shall be equipped with a tether anchorage conforming to the requirements of S6 at no fewer than three forward-facing rear designated seating positions. The tether anchorage of a child restraint anchorage system may count towards the three required tether anchorages. In each vehicle with a forward-facing rear designated seating position other than an outboard designated seating position, at least one tether anchorage (with or without the lower anchorages of a child restraint anchorage system) shall be at such a designated seating position. In a vehicle with three or more rows of seating positions, at least one of the tether anchorages (with or without the lower anchorages of a child restraint anchorage system) shall be installed at a forward-facing seating position in the second row if such a forward-facing

seating position is available in that row.

(b) Each vehicle with not more than two forward-facing rear designated seating positions shall be equipped with a tether anchorage conforming to the requirements of S6 at each forward-facing rear designated seating position. The tether anchorage of a child restraint anchorage system may count toward the required tether anchorages.

(c) Each vehicle without any forward-facing rear designated seating position shall be equipped with a tether anchorage conforming to the requirements of S6 at each front forward-facing passenger seating position.

S4.3 Each vehicle manufactured on or after September 1, 2000 and before September 1, 2002, shall be equipped as specified in paragraphs (a) and (b) of S4.3, except as provided in S5.

(a) A specified percentage of each manufacturer's yearly production, as set forth in S14, shall be equipped as follows:

(1) Each vehicle with three or more forward-facing rear designated seating positions shall be equipped with a child restraint anchorage system conforming to the requirements of S9 at not fewer than two forward-facing rear designated seating positions. In a vehicle with three or more rows of seating positions, at least one of the child restraint anchorage systems shall be at a forward-facing seating position in the second row if such a forward-facing seating position is available in that row.

(2) Each vehicle with not more than two forward-facing rear designated seating positions shall be equipped with a child restraint anchorage system conforming to the requirements of S9 at each forward-facing rear designated seating position.

(b) Each vehicle, including a vehicle that is counted toward the percentage of a manufacturer's yearly production required to be equipped with child restraint anchorage systems, shall be equipped as described in S4.3(b)(1), (2) or (3), subject to S13.

(1) Each vehicle with three or more forward-facing rear designated seating positions shall be equipped with a tether anchorage conforming to the requirements of S6 at no fewer than three forward-facing rear designated seating positions. The tether anchorage of a child restraint anchorage system may count towards the three required tether anchorages. In each vehicle with a forward-facing rear designated seating position other than an outboard designated seating position, at least one tether anchorage (with or without the lower anchorages of a child restraint anchorage system) shall be at such a designated seating position. In a vehicle with three or more rows of seating positions, at least one of the tether anchorages (with or without the lower anchorages of a child restraint anchorage system) shall be installed at a forward-facing seating position in the second row if such a forward-facing seating position is available in that row.

(2) Each vehicle with not more than two forward-facing rear designated seating positions shall be equipped with a tether anchorage conforming to the requirements of S6 at each forward-facing rear designated seating position. The tether anchorage of a child restraint anchorage system may count toward the required tether anchorages.

(3) Each vehicle without any forward-facing rear designated seating position shall be equipped with a tether anchorage conforming to the requirements of S6 at each front passenger seating position.

S4.4 Vehicles manufactured on or after September 1, 2002 shall be equipped as specified in paragraphs (a) through (c) of S4.4, except as provided in S5.

(a) Each vehicle with three or more forward-facing rear designated seating positions shall be equipped as specified in S4.4(a)(1) and (2).

(1) Each vehicle shall be equipped with a child restraint anchorage system conforming to the requirements of S9 at not fewer than two forward-facing rear designated seating positions. At least one of the child restraint anchorage systems shall be installed at a forward-facing seating position in the second row in each vehicle that has three or more rows, if such a forward-facing seating position is available in that row.

(2) Each vehicle shall be equipped with a tether anchorage conforming to

the requirements of S6 at a third forward-facing rear designated seating position. The tether anchorage of a child restraint anchorage system may count towards the third required tether anchorage. In each vehicle with a forward-facing rear designated seating position other than an outboard designated seating position, at least one tether anchorage (with or without the lower anchorages of a child restraint anchorage system) shall be at such a designated seating position.

(b) Each vehicle with not more than two forward-facing rear designated seating positions shall be equipped with a child restraint anchorage system conforming to the requirements of S9 at each forward-facing rear designated seating position.

(c) Each vehicle without any forward-facing rear designated seating position shall be equipped with a tether anchorage conforming to the requirements of S6 at each front forward-facing passenger seating position.

S4.5 As an alternative to complying with the requirements of S4.2 through S4.4 that specify the number of tether anchorages that are required in a vehicle and the designated seating positions for which tether anchorages must be provided, a vehicle manufactured from September 1, 1999 to August 31, 2004 may, at the manufacturer's option (with said option irrevocably selected prior to, or at the time of, certification of the vehicle), meet the requirements of this S4.5. This alternative ceases to be available on and after September 1, 2004. A tether anchorage conforming to the requirements of S6 must be installed—

(a) For each designated seating position, other than that of the driver, in a vehicle that has only one row of designated seating positions;

(b) For each forward-facing designated seating position in the second row of seating positions in a passenger car or truck;

(c) For each of any two forward-facing designated seating positions in the second row of seating positions in a multipurpose passenger vehicle that has five or fewer designated seating positions; and,

(d) For each of any three forward-facing designated seating positions that are located to the rear of the first row of designated seating positions in a multipurpose passenger vehicle that has six or more designated seating positions.

S4.6 *Adjustable seats.* (a) A vehicle that is equipped with a forward-facing rear designated seating position that can be relocated such that it is capable of being used at either an outboard or non-outboard forward-facing seating position shall be considered as having a forward-facing non-outboard seating position. Such an adjustable seat must be equipped with a tether anchorage (with or without the lower anchorages of a child restraint anchorage system) if the vehicle does not have another forward-facing non-outboard seating position that is so equipped.

(b) Tether and lower anchorages shall be available for use at all times, except when the seating position for which it is installed is not available for use because the vehicle seat has been removed or converted to an alternate use such as the carrying of cargo.

S5. *General exceptions.*

(a) Convertibles and school buses are excluded from the requirements to be equipped with tether anchorages.

(b) A vehicle may be equipped with a built-in child restraint system conforming to the requirements of Standard No. 213 (49 CFR 571.213) instead of one of the required tether anchorages or child restraint anchorage systems.

(c)(1) Each vehicle that—

(i) Does not have a rear designated seating position and that thus meets the conditions in S4.5.4.1(a) of Standard No. 208 (§571.208); and

(ii) Has an air bag on-off switch meeting the requirements of S4.5.4 of Standard No. 208 (§571.208), shall have a child restraint anchorage system for a designated passenger seating position in the front seat, instead of only a tether anchorage. In the case of convertibles, the front designated passenger seating position need have only the two lower anchorages meeting the requirements of S9 of this standard.

(iii) For vehicles manufactured on or after September 1, 2002, each vehicle that does not have a rear designated seating position, and does not have an air bag installed at front passenger designated seating positions pursuant to a

temporary exemption granted by NHTSA under 49 CFR Part 555, must have a child restraint anchorage system installed at a front passenger designated seating position. In the case of convertibles, the front designated passenger seating position need have only the two lower anchorages meeting the requirements of S9 of this standard.

(2) Each vehicle that—

(i) Has a rear designated seating position and meets the conditions in S4.5.4.1(b) of Standard No. 208 (§ 571.208); and,

(ii) Has an air bag on-off switch meeting the requirements of S4.5.4 of Standard 208 (§ 571.208), shall have a child restraint anchorage system for a designated passenger seating position in the front seat, instead of a child restraint anchorage system that is required for the rear seat. In the case of convertibles, the front designated passenger seating position need have only the two lower anchorages meeting the requirements of S9 of this standard.

(iii) For vehicles manufactured on or after September 1, 2002, each vehicle that has a rear designated seating position and meets the conditions in S4.5.4.1(b) of Standard No. 208 (§ 571.208), and does not have an air bag installed at front passenger designated seating positions pursuant to a temporary exemption granted by NHTSA under 49 CFR part 555, must have a child restraint anchorage system installed at a front passenger designated seating position in place of one of the child restraint anchorage systems that is required for the rear seat. In the case of convertibles, the front designated passenger seating position need have only the two lower anchorages meeting the requirements of S9 of this standard.

(d) A vehicle that does not have an air bag on-off switch meeting the requirements of S4.5.4 of Standard No. 208 (§ 571.208), shall not have any child restraint anchorage system installed at a front designated seating position.

(e) A vehicle with a rear designated seating position for which interference with transmission and/or suspension components prevents the location of the lower bars of a child restraint anchorage system anywhere within the zone described by S9.2 or S15.1.2.2(b) such that the attitude angles of S15.1.2.2(a) could be met, is excluded from the requirement to provide a child restraint anchorage system at that position. However, except as provided elsewhere in S5 of this standard, for vehicles manufactured on or after September 1, 2001, such a vehicle must have a tether anchorage at a front passenger designated seating position.

S6. *Requirements for tether anchorages.*

S6.1 *Configuration of the tether anchorage.* Each tether anchorage shall:

(a) Permit the attachment of a tether hook of a child restraint system meeting the configuration and geometry specified in Figure 11 of Standard No. 213 (§ 571.213);

(b) Be accessible without the need for any tools other than a screwdriver or coin;

(c) Once accessed, be ready for use without the need for any tools; and

(d) Be sealed to prevent the entry of exhaust fumes into the passenger compartment.

S6.2 *Location of the tether anchorage.* A vehicle manufactured on or after September 1, 1999 and before September 1, 2004 may, at the manufacturer's option (with said option irrevocably selected prior to, or at the time of, certification of the vehicle), meet the requirements of S6.2.1 or S6.2.2. Vehicles manufactured on or after September 1, 2004 must meet the requirements of S6.2.1 of this standard.

S6.2.1 Subject to S6.2.1.1 and S6.2.1.2, the part of each tether anchorage that attaches to a tether hook must be located within the shaded zone shown in Figures 3 to 7 of this standard of the designated seating position for which it is installed. The zone is defined with reference to the seating reference point (see § 571.3). (For purposes of the figures, ''H Point'' is defined to mean seating reference point.) A tether anchorage may be recessed in the seat back, provided that it is not in the strap wrap-around area at the top of the vehicle seat back. For the area under the vehicle seat, the forwardmost edge of the shaded zone is defined by the torso line reference plane.

S6.2.1.1 In the case of passenger cars and multipurpose passenger vehicles manufactured before September 1, 2004,

the part of each user-ready tether anchorage that attaches to a tether hook may, at the manufacturer's option (with said option selected prior to, or at the time of, certification of the vehicle), instead of complying with S6.2.1, be located within the shaded zone shown in Figures 8 to 11 of this standard of the designated seating position for which it is installed, relative to the shoulder reference point of the three dimensional H-point machine described in section 3.1 of SAE Standard J826–1992 (incorporated by reference, see §571.5) such that—

(a) The H-point of the three dimensional H-point machine is located—

(1) At the actual H-point of the seat, as defined in section 2.2.11.3 of SAE Recommended Practice J1100–1993 (incorporated by reference, see §571.5), at the full rearward and downward position of the seat; or

(2) In the case of a designated seating position that has a child restraint anchorage system, midway between vertical longitudinal planes passing through the lateral center of the bar in each of the two lower anchorages of that system; and

(b) The back pan of the H-point machine is at the same angle to the vertical as the vehicle seat back with the seat adjusted to its full rearward and full downward position and the seat back in its most upright position.

S6.2.1.2 In the case of a vehicle that—

(a) Has a user-ready tether anchorage for which no part of the shaded zone shown in Figures 3 to 7 of this standard of the designated seating position for which the anchorage is installed is accessible without removing a seating component of the vehicle; and

(b) Has a tether strap routing device that is—

(1) Not less than 65 mm behind the torso line for that seating position, in the case of a flexible routing device or a deployable routing device, measured horizontally and in a vertical longitudinal plane; or

(2) Not less than 100 mm behind the torso line for that seating position, in the case of a fixed rigid routing device, measured horizontally and in a vertical longitudinal plane, the part of that anchorage that attaches to a tether hook may, at the manufacturer's option (with said option selected prior to, or at the time of, certification of the vehicle) be located outside that zone.

(c) The measurement of the location of the flexible or deployable routing device described in S6.2.1.2(b)(1) is made with SFAD 2 properly attached to the lower anchorages. A 40 mm wide nylon tether strap is routed through the routing device and attached to the tether anchorage in accordance with the written instructions required by S12 of this standard. The forwardmost contact point between the strap and the routing device must be within the stated limit when the tether strap is flat against the top surface of the SFAD and tensioned to 55 to 65 N. In seating positions without lower anchorages of a child restraint anchorage system, the SFAD 2 is held with its central lateral plane in the central vertical longitudinal plane of the seating position. The adjustable anchor attaching bars of the SFAD 2 are replaced by spacers that end flush with the back surface of the SFAD.

S6.2.2 Subject to S6.2.2.1 and S6.2.2.2, the portion of each user-ready tether anchorage that is designed to bind with a tether strap hook shall be located within the shaded zone shown in Figures 3 to 7 of this standard of the designated seating position for which it is installed, with reference to the H-point of a template described in section 3.1 of SAE Standard J826–1992 (incorporated by reference, see §571.5), if:

(a) The H-point of the template is located—

(1) At the unique Design H-point of the designated seating position, as defined in section 2.2.11.1 of SAE Recommended Practice J1100–1993 (incorporated by reference, see §571.5), at the full downward and full rearward position of the seat, or—

(2) In the case of a designated seating position that has a means of affixing the lower portion of a child restraint system to the vehicle, other than a vehicle seat belt, midway between the two lower restraint system anchorages;

(b) The torso line of the template is at the same angle to the transverse vertical plane as the vehicle seat back with the seat adjusted to its full rearward and full downward position and

the seat back in its most upright position; and

(c) The template is positioned in the vertical longitudinal plane that contains the H-point of the template.

S6.2.2.1 In passenger cars and multipurpose passenger vehicles manufactured before September 1, 2004, the portion of each user-ready tether anchorage to which a tether strap hook attaches may be located within the shaded zone shown in Figures 8 to 11 of the designated seating position for which it is installed, with reference to the shoulder reference point of a template described in section 3.1 of SAE Standard J826–1992 (incorporated by reference, see § 571.5), if:

(a) The H-point of the template is located—

(1) At the unique Design H-point of the designated seating position, as defined in section 2.2.11.1 of SAE Recommended Practice J1100–1993 (incorporated by reference, see § 571.5), at the full downward and full rearward position of the seat, or—

(2) In the case of a designated seating position that has a means of affixing the lower portion of a child restraint system to the vehicle, other than a vehicle seat belt, midway between the two lower restraint system anchorages;

(b) The torso line of the template is at the same angle to the vertical plane as the vehicle seat back with the seat adjusted to its full rearward and full downward position and the seat back in its most upright position; and

(c) The template is positioned in the vertical longitudinal plane that contains the H-point of the template.

S6.2.2.2 The portion of a user-ready tether anchorage in a vehicle that is designed to bind with the tether strap hook may be located outside the shaded zone referred to in S6.2.2, if no part of the shaded zone is accessible without removing a seating component of the vehicle and the vehicle is equipped with a routing device that—

(a) Ensures that the tether strap functions as if the portion of the anchorage designed to bind with the tether strap hook were located within the shaded zone;

(b) Is at least 65 mm behind the torso line, in the case of a non-rigid-webbing-type routing device or a deployable routing device, or at least 100 mm behind the torso line, in the case of a fixed rigid routing device; and

(c) When tested after being installed as it is intended to be used, is of sufficient strength to withstand, with the user-ready tether anchorage, the load referred to in S6.3.4 or S6.3.4.1, as applicable.

S6.3 *Strength requirements for tether anchorages.* Subject to S6.3.2, a vehicle manufactured on or after September 1, 1999, and before September 1, 2004 may, at the manufacturer's option (with said option irrevocably selected prior to, or at the time of, certification of the vehicle), meet the requirements of S6.3.1 or S6.3.4. Vehicles manufactured on or after September 1, 2004 and before September 1, 2005 must meet the requirements of S6.3.1 of this standard, except as provided in S16 of this standard. Vehicles manufactured on or after September 1, 2005 must meet the requirements of S6.3.1.

S6.3.1 Subject to S6.3.2, when tested in accordance with S8, after preloading the device with a force of 500 N, the tether anchorage must not separate completely from the vehicle seat or seat anchorage or the structure of the vehicle.

S6.3.2 In vehicles manufactured before September 1, 2004, each user-ready tether anchorage in a row of designated seating positions in a passenger car may, at the manufacturer's option (with said option selected prior to, or at the time of, certification of the vehicle), instead of complying with S6.3.1, withstand the application of a force of 5,300 N, when tested in accordance with S8.2, such that the anchorage does not release the belt strap specified in S8.2 or allow any point on the tether anchorage to be displaced more than 125 mm.

S6.3.3 *Provisions for simultaneous and sequential testing.* (a) In the case of vehicle seat assemblies equipped with more than one tether anchorage system, the force referred to in S6.3.1 and S6.3.2 may, at the agency's option, be applied simultaneously to each of those tether anchorages. However, that force may not be applied simultaneously to tether anchorages for any two adjacent seating positions whose midpoints are less than 400 mm apart, as measured in

accordance with S6.3.3(a)(1) and (2) and Figure 20.

(1) The midpoint of the seating position lies in the vertical longitudinal plane that is equidistant from vertical longitudinal planes through the geometric center of each of the two lower anchorages at the seating position. For those seating positions that do not provide lower anchorages, the midpoint of the seating position lies in the vertical longitudinal plane that passes through the SgRP of the seating position.

(2) Measure the distance between the vertical longitudinal planes passing through the midpoints of the adjacent seating positions, as measured along a line perpendicular to the planes.

(b) A tether anchorage of a particular child restraint anchorage system will not be tested with the lower anchorages of that anchorage system if one or both of those lower anchorages have been previously tested under this standard.

S6.3.4 Subject to subsections S6.3.4.1 and S6.3.4.2, every user-ready tether anchorage in a row of designated seating positions shall, when tested, withstand the application of a force of 10,000 N—

(a) Applied by means of one of the following types of test devices, installed as a child restraint system would be installed in accordance with the manufacturer's installation instructions, namely,

(1) SFAD 1, to test a tether anchorage at a designated seating position that does not have a child restraint anchorage system; or

(2) SFAD 2, to test a tether anchorage at a designated seating position that has a child restraint anchorage system;

(b) Applied—

(1) In a forward direction parallel to the vehicle's vertical longitudinal plane through the X point on the test device, and,

(2) Initially, along a horizontal line or along any line below or above that line that is at an angle to that line of not more than 5 degrees;

(c) Approximately linearly over a time, at the option of the vehicle manufacturer, of not more than 30 seconds, at any onset force rate of not more than 135 000 N/s; and

(d) Maintained at a 10,000 N level for one second.

S6.3.4.1 In a passenger car manufactured before September 1, 2004, every user-ready tether anchorage in a row of designated seating positions must, when tested, subject to subsection S6.3.4.2, withstand the application of a force of 5,300 N, which force must be—

(a) Applied by means of a belt strap that—

(1) Extends not less than 250 mm forward from the vertical plane touching the rear top edge of the vehicle seat back,

(2) Is fitted at one end with suitable hardware for applying the force and at the other end with a bracket for the attachment of the user-ready tether anchorage, and

(3) Passes over the top of the vehicle seat back as shown in Figure 19 of this standard;

(b) Applied—

(1) In a forward direction parallel to the vehicle's longitudinal vertical plane, and

(2) Initially, along a horizontal line or along any line below that line that is at an angle to that line of not more than 20 degrees;

(c) Attained within 30 seconds, at any onset force rate of not more than 135,000 N/s; and

(d) Maintained at a 5,300 N level for one second.

S6.3.4.2 If the zones in which tether anchorages are located overlap and if, in the overlap area, a user-ready tether anchorage is installed that is designed to accept the tether strap hooks of two restraint systems simultaneously, both portions of the tether anchorage that are designed to bind with a tether strap hook shall withstand the force referred to in subsection S6.3.4 or S6.3.4.1, as the case may be, applied to both portions simultaneously.

S6.3.4.3 *Provisions for simultaneous and sequential testing.* (a) In the case of vehicle seat assemblies equipped with more than one tether anchorage system, the force referred to in S6.3.4, 6.3.4.1 or S6.3.4.2 may, at the agency's option, be applied simultaneously to each of those tether anchorages. However, that force may not be applied simultaneously to tether anchorages for any two adjacent seating positions

whose midpoints are less than 400 mm apart, as measured in accordance with S6.3.4.3(a)(1) and (2) and Figure 20.

(1) The midpoint of the seating position lies in the vertical longitudinal plane that is equidistant from vertical longitudinal planes through the geometric center of each of the two lower anchorages at the seating position. For those seating positions that do not provide lower anchorages, the midpoint of the seating position lies in the vertical longitudinal plane that passes through the SgRP of the seating position.

(2) Measure the distance between the vertical longitudinal planes passing through the midpoints of the adjacent seating positions, as measured along a line perpendicular to the planes.

(b) A tether anchorage of a particular child restraint anchorage system will not be tested with the lower anchorages of that anchorage system if one or both of those lower anchorages have been previously tested under this standard.

S6.3.4.4 The strength requirement tests shall be conducted with the vehicle seat adjusted to its full rearward and full downward position and the seat back in its most upright position. When SFAD 2 is used in testing and cannot be attached to the lower anchorages with the seat back in this position, adjust the seat back as recommended by the manufacturer in its instructions for attaching child restraints. If no instructions are provided, adjust the seat back to the position that enables SFAD 2 to attach to the lower anchorages that is the closest to the most upright position.

S7. *Test conditions for testing tether anchorages.*

The test conditions described in paragraphs (a) and (b) of S7 apply to the test procedures in S8.

(a) Vehicle seats are adjusted to their full rearward and full downward position and the seat back is placed in its most upright position. When SFAD 2 is used in testing and cannot be attached to the lower anchorages with the seat back in this position, adjust the seat back as recommended by the manufacturer in its instructions for attaching child restraints. If no instructions are provided, adjust the seat back to the position that enables SFAD 2 to attach to the lower anchorages that is the closest to the most upright position.

(b) Head restraints are adjusted in accordance with the manufacturer's instructions, provided pursuant to S12, as to how the head restraints should be adjusted when using the child restraint anchorage system. If instructions with regard to head restraint adjustment are not provided pursuant to S12, the head restraints are adjusted to any position.

S8 *Test procedures.* Each vehicle shall meet the requirements of S6.3.1 and S6.3.3 when tested according to the following procedures. Where a range of values is specified, the vehicle shall be able to meet the requirements at all points within the range. For the testing specified in these procedures, the SFAD used in the test has a tether strap consisting of webbing material with an elongation limit of 4 percent at a tensile load of 65,000 N (14,612 lb). Pretension the tether strap with 53.5 N to 67 N of preload prior to the test. The strap is fitted at one end with a high strength steel tether hook for attachment to the tether anchorage. The tether hook meets the specifications in Standard No. 213 (49 CFR § 571.213) as to the configuration and geometry of tether hooks required by the standard. A steel cable is connected to the X point through which the test force is applied.

S8.1 Apply the force specified in S6.3.1 as follows—

(a) Use the following specified test device, as appropriate:

(1) SFAD 1, to test a tether anchorage at a designated seating position that does not have a child restraint anchorage system; or,

(2) SFAD 2, to test a tether anchorage at a designated seating position that has a child restraint anchorage system.

(b) Attach the SFAD 1 to the vehicle seat using the vehicle belts or the SFAD 2 to the lower anchorages of the child restraint anchorage system, as appropriate, and attach the test device to the tether anchorage, in accordance with the manufacturer's instructions provided pursuant to S12 of this standard. For the testing specified in this procedure, if SFAD 1 cannot be attached using the vehicle belts because

of the location of the vehicle belt buckle, the test device is attached by material whose breaking strength is equal to or greater than the breaking strength of the webbing for the seat belt assembly installed as original equipment at that seating position. The geometry of the attachment duplicates the geometry, at the pre-load point, of the attachment of the originally installed seat belt assembly. All belt systems (including the tether) used to attach the test device are tightened to a tension of not less than 53.5 N and not more than 67 N on the webbing portion of the belt. For SFAD 1, apply a rearward force of 135 N ±15 N, in a horizontal plane through point ''X'' of SFAD 1. While maintaining the force, tighten the vehicle seat belt to a tension of not less than 53.5 N and not more than 67 N measured at the lap portion of the seat belt and maintain the tension during the preload, lock the seat belt retractor, and tighten the tether belt strap to remove all slack. A rearward force of 135 N ±15 N is applied to the center of the lower front crossmember of SFAD 2 to press the device against the seat back as the fore-aft position of the rearward extensions of the SFAD is adjusted to remove any slack or tension.

(c) Apply the force—

(1) Initially, in a forward direction in a vertical longitudinal plane and through the Point X on the test device; and

(2) Initially, along a line through the X point and at an angle of 10 ±5 degrees above the horizontal. Apply a preload force of 500 N to measure the angle; and then

(3) Increase the pull force as linearly as practicable to a full force application of 15,000 N in not less than 24 seconds and not more than 30 seconds, and maintain at a 15,000 N level for 1 second.

S8.2 Apply the force specified in S6.3.2 as follows:

(a) Attach a belt strap, and tether hook, to the user-ready tether anchorage. The belt strap extends not less than 250 mm forward from the vertical transverse plane touching the rear top edge of the vehicle seat back, and passes over the top of the vehicle seat back as shown in Figure 19 of this standard;

(b) Apply the force at the end of the belt strap—

(1) Initially, in a forward direction in a vertical longitudinal plane that is parallel to the vehicle's longitudinal centerline;

(2) Initially, along a horizontal line or along any line below or above that line that is at an angle to that line of not more than 20 degrees;

(3) So that the force is attained within 30 seconds, at any onset rate of not more than 135,000 N/s; and

(4) Maintained at a 5,300 N level for a minimum of 1 second.

S9 *Requirements for the lower anchorages of the child restraint anchorage system.* As an alternative to complying with the requirements of S9, a vehicle manufactured on or after September 1, 1999 and before September 1, 2004 may, at the manufacturer's option (with said option irrevocably selected prior to, or at the time of, certification of the vehicle), meet the requirements in S15 of this standard. Vehicles manufactured on or after September 1, 2004 and before September 1, 2005 must meet all of the requirements of S9 of this standard, except as provided in S16 of this standard with regard to S9.4. Vehicles manufactured on or after September 1, 2005 must meet all the requirements of S9 of this standard.

S9.1 *Configuration of the lower anchorages*

S9.1.1 The lower anchorages shall consist of two bars that—

(a) Are 6 mm ±.1 mm in diameter;

(b) Are straight, horizontal and transverse;

(c) As shown in Figure 21, are:

(i) Not less than 25 mm in length, and

(ii) Are not more than 60 mm in length between the anchor bar supports or other structural members of the vehicle that restrict lateral movement of the components of a child restraint that are designed to attach to the bars, measured in a vertical plane 7 mm rearward of the vertical plane that is tangent of the rearward face of the anchor bar.

(d) For bars installed in vehicles manufactured on or after March 1, 2005, the bars must not be capable of being

stowable (foldable or otherwise stowable).

(e) [Reserved]

(f) Are part of the vehicle, such that they can only be removed by use of a tool, such as a screwdriver or wrench; and

(g) Are rigidly attached to the vehicle such that they will not deform more than 5 mm when subjected to a 100 N force in any direction.

S9.2 *Location of the lower anchorages.*

S9.2.1 The anchorage bars are located at the vehicle seating position by using the CRF rearward extensions, with the CRF placed against or near the vehicle seat back. With the CRF attached to the anchorages and resting on the seat cushion, the bottom surface shall have attitude angles within the limits in the following table, angles measured relative to the vehicle horizontal, longitudinal and transverse reference planes.

TABLE TO S9.2.1

Pitch	15° ±10°
Roll	0° ±5°
Yaw	0° ±10°

NOTE: An explanation of the above angles is given in Figure 1.

S9.2.2 With adjustable seats adjusted as described in S9.2.3, each lower anchorage bar shall be located so that a vertical transverse plane tangent to the front surface of the bar is:

(a) Not more than 70 mm behind the corresponding point Z of the CRF, measured parallel to the bottom surface of the CRF and in a vertical longitudinal plane, while the CRF is pressed against the seat back by the rearward application of a horizontal force of 100 N at point A on the CRF; and

(b) Not less than 120 mm behind the vehicle seating reference point, measured horizontally and in a vertical longitudinal plane.

S9.2.3 Adjustable seats are adjusted as follows:

(a) Place adjustable seat backs in the manufacturer's nominal design riding position in the manner specified by the manufacturer; and

(b) Place adjustable seats in the full rearward and full downward position.

S9.3 *Adequate fit of the lower anchorages.* Each vehicle and each child restraint anchorage system in that vehicle shall be designed such that the CRF can be placed inside the vehicle and attached to the lower anchorages of each child restraint anchorage system, with adjustable seats adjusted as described in S9.3(a) and (b).

(a) Place adjustable seat backs in the manufacturer's nominal design riding position in the manner specified by the manufacturer; and

(b) Place adjustable seats in the full rearward and full downward position.

(c) To facilitate installation of the CRF in a vehicle seat, the side, back and top frames of the CRF may be removed for installation in the vehicle, as indicated in Figure 1A of this standard. If necessary, the height of the CRF may be 560 mm.

S9.4 *Strength of the lower anchorages.*

S9.4.1 When tested in accordance with S11, the lower anchorages shall not allow point X on SFAD 2 to be displaced horizontally more than the distances specified below, after preloading the device—

(a) 175 mm, when a force of 11,000 N is applied in a forward direction in a vertical longitudinal plane; and

(b) 150 mm, for lower anchorages when a force of 5,000 N is applied in a lateral direction in a vertical longitudinal plane that is 75 ±5 degrees to either side of a vertical longitudinal plane.

S9.4.1.1 Forces described in S9.4.1(a), forward direction, shall be applied with an initial force application angle of 10 ±5 degrees above the horizontal. Forces described in S9.4.1(b), lateral direction, shall be applied horizontally (0 ±5 degrees).

S9.4.1.2 The amount of displacement is measured relative to an undisturbed point on the vehicle body.

S9.4.2 *Provisions for simultaneous and sequential testing.* (a) In the case of vehicle seat assemblies equipped with more than one child restraint anchorage system, the lower anchorages may, at the agency's option, be tested simultaneously. However, forces may not be applied simultaneously for any two adjacent seating positions whose midpoints are less than 400 mm apart, as measured in accordance with S9.4.2(a)(1) and (2) and Figure 20.

(1) The midpoint of the seating position lies in the vertical longitudinal plane that is equidistant from vertical longitudinal planes through the geometric center of each of the two lower anchorages at the seating position.

(2) Measure the distance between the vertical longitudinal planes passing through the midpoints of the adjacent seating positions, as measured along a line perpendicular to the planes.

(b) The lower anchorages of a particular child restraint anchorage system will not be tested if one or both of the anchorages have been previously tested under this standard.

S9.5 *Marking and conspicuity of the lower anchorages.* Each vehicle shall comply with S9.5(a) or (b).

(a) Above each bar installed pursuant to S4, the vehicle shall be permanently marked with a circle:

(1) That is not less than 13 mm in diameter;

(2) That is either solid or open, with or without words, symbols or pictograms, provided that if words, symbols or pictograms are used, their meaning is explained to the consumer in writing, such as in the vehicle's owners manual; and

(3) That is located such that its center is on each seat back between 50 and 100 mm above or on the seat cushion 100 ±25 mm forward of the intersection of the vertical transverse and horizontal longitudinal planes intersecting at the horizontal centerline of each lower anchorage, as illustrated in Figure 22. The center of the circle must be in the vertical longitudinal plane that passes through the center of the bar (±25 mm).

(4) The circle may be on a tag.

(b) The vehicle shall be configured such that the following is visible: Each of the bars installed pursuant to S4, or a permanently attached guide device for each bar. The bar or guide device must be visible without the compression of the seat cushion or seat back, when the bar or device is viewed, in a vertical longitudinal plane passing through the center of the bar or guide device, along a line making an upward 30 degree angle with a horizontal plane. Seat backs are in the nominal design riding position. The bars may be covered by a removable cap or cover, provided that the cap or cover is permanently marked with words, symbols or pictograms whose meaning is explained to the consumer in written form as part of the owner's manual.

S10. *Test conditions for testing the lower anchorages.* The test conditions described in this paragraph apply to the test procedures in S11.

(a) Adjust vehicle seats to their full rearward and full downward position and place the seat backs in their most upright position. When SFAD 2 is used in testing and cannot be attached to the lower anchorages with the seat back in this position, adjust the seat back as recommended by the manufacturer in its instructions for attaching child restraints. If no instructions are provided, adjust the seat back to the position closest to the upright position that enables SFAD 2 to attach to the lower anchorages.

(b) Head restraints are adjusted in accordance with the manufacturer's instructions, provided pursuant to S12, as to how the head restraints should be adjusted when using the child restraint anchorage system. If instructions with regard to head restraint adjustment are not provided pursuant to S12, the head restraints are adjusted to any position.

S11. *Test procedure.* Each vehicle shall meet the requirements of S9.4 when tested according to the following procedures. Where a range of values is specified, the vehicle shall be able to meet the requirements at all points within the range.

(a) *Forward force direction.* Place SFAD 2 in the vehicle seating position and attach it to the two lower anchorages of the child restraint anchorage system. Do not attach the tether anchorage. A rearward force of 135 ±15 N is applied to the center of the lower front crossbar of SFAD 2 to press the device against the seat back as the fore-aft position of the rearward extensions of the SFAD is adjusted to remove any slack or tension. Apply a preload force of 500 N at point X of the test device. Increase the pull force as linearly as practicable to a full force application of 11,000 N in not less than 24 seconds and not more than 30 seconds, and maintain at an 11,000 N level for 1 second.

(b) *Lateral force direction.* Place SFAD 2 in the vehicle seating position and attach it to the two lower anchorages of the child restraint anchorage system. Do not attach the tether anchorage. A rearward force of 135 ±15 N is applied to the center of the lower front crossbar of SFAD 2 to press the device against the seat back as the fore-aft position of the rearward extensions of the SFAD is adjusted to remove any slack or tension. Apply a preload force of 500 N at point X of the test device. Increase the pull force as linearly as practicable to a full force application of 5,000 N in not less than 24 seconds and not more than 30 seconds, and maintain at a 5,000 N level for 1 second.

S12. *Written instructions.* The vehicle must provide written instructions, in English, for using the tether anchorages and the child restraint anchorage system in the vehicle. If the vehicle has an owner's manual, the instructions must be in that manual. The instructions shall:

(a) Indicate which seating positions in the vehicle are equipped with tether anchorages and child restraint anchorage systems;

(b) In the case of vehicles required to be marked as specified in paragraphs S4.1, S9.5(a), or S15.4, explain the meaning of markings provided to locate the lower anchorages of child restraint anchorage systems; and

(c) Include instructions that provide a step-by-step procedure, including diagrams, for properly attaching a child restraint system's tether strap to the tether anchorages.

S13. *Tether anchorage phase-in requirements.*

S13.1 Passenger cars manufactured on or after September 1, 1999 and before September 1, 2000 shall comply with S13.1.1 through S13.2. At anytime during the production year ending August 31, 2000, each manufacturer shall, upon request from the Office of Vehicle Safety Compliance, provide information identifying the passenger cars (by make, model and vehicle identification number) that have been certified as complying with the tether anchorage requirements of this standard. The manufacturer's designation of a passenger car as a certified vehicle is irrevocable.

S13.1.1 Subject to S13.2, for passenger cars manufactured on or after September 1, 1999 and before September 1, 2000, the number of vehicles complying with S4.2 shall be not less than 80 percent of:

(a) The manufacturer's average annual production of passenger cars manufactured on or after September 1, 1996 and before September 1, 1999; or

(b) The manufacturer's production of passenger cars manufactured on or after September 1, 1999 and before September 1, 2000.

S13.1.2 For the purpose of calculating average annual production of vehicles for each manufacturer and the number of vehicles manufactured by each manufacturer under S13.1.1, a vehicle produced by more than one manufacturer shall be attributed to a single manufacturer as provided in S13.1.2(a) through (c), subject to S13.2.

(a) A vehicle which is imported shall be attributed to the importer.

(b) A vehicle manufactured in the United States by more than one manufacturer, one of which also markets the vehicle, shall be attributed to the manufacturer which markets the vehicle.

(c) A vehicle produced by more than one manufacturer must be attributed to any one of the vehicle's manufacturers specified by an express written contract, reported to the National Highway Traffic Safety Administration under 49 CFR part 585, between the manufacturer so specified and the manufacturer to which the vehicle would otherwise be attributed under S13.1.2(a) or (b).

S13.2 For the purposes of calculating average annual production of passenger cars for each manufacturer and the number of passenger cars manufactured by each manufacturer under S13.1, each passenger car that is excluded from the requirement to provide tether anchorages is not counted.

S13.3 Until May 1, 2001, vehicles manufactured by a final-stage manufacturer or alterer need not be equipped with the tether anchorages required by S4.3 of this standard. Vehicles manufactured by a final-stage manufacturer or alterer on or after May 1, 2001 must be equipped with the tether anchorages specified in S4.3.

S14. *Lower anchorages phase-in requirements for vehicles manufactured on or after September 1, 2000 and before September 1, 2002.*

S14.1 Vehicles manufactured on or after September 1, 2000 and before September 1, 2002 shall comply with S14.1.1 through S14.1.2. At anytime during the production years ending August 31, 2001, and August 31, 2002, each manufacturer shall, upon request from the Office of Vehicle Safety Compliance, provide information identifying the vehicles (by make, model and vehicle identification number) that have been certified as complying with the child restraint anchorage requirements of this standard. The manufacturer's designation of a vehicle as a certified vehicle is irrevocable.

S14.1.1 *Vehicles manufactured on or after September 1, 2000 and before September 1, 2001.* Subject to S14.4, for vehicles manufactured on or after September 1, 2000 and before September 1, 2001, the number of vehicles complying with S4.3 shall be not less than 20 percent of:

(a) The manufacturer's average annual production of vehicles manufactured on or after September 1, 1997 and before September 1, 2000; or

(b) The manufacturer's production on or after September 1, 2000 and before September 1, 2001.

S14.1.2 *Vehicles manufactured on or after September 1, 2001 and before September 1, 2002.* Subject to S14.4, for vehicles manufactured on or after September 1, 2001 and before September 1, 2002, the number of vehicles complying with S4.3 shall be not less than 50 percent of:

(a) The manufacturer's average annual production of vehicles manufactured on or after September 1, 1998 and before September 1, 2001; or

(b) The manufacturer's production on or after September 1, 2001 and before September 1, 2002.

S14.2 *Vehicles produced by more than one manufacturer.*

S14.2.1 For the purpose of calculating average annual production of vehicles for each manufacturer and the number of vehicles manufactured by each manufacturer under S14.1.1 through S14.1.2, a vehicle produced by more than one manufacturer shall be attributed to a single manufacturer as follows, subject to S14.2.2.

(a) A vehicle which is imported shall be attributed to the importer.

(b) A vehicle manufactured in the United States by more than one manufacturer, one of which also markets the vehicle, shall be attributed to the manufacturer which markets the vehicle.

S14.2.2 A vehicle produced by more than one manufacturer must be attributed to any one of the vehicle's manufacturers specified by an express written contract, reported to the National Highway Traffic Safety Administration under 49 CFR part 585, between the manufacturer so specified and the manufacturer to which the vehicle would otherwise be attributed under S14.2.1.

S14.3 *Alternative phase-in schedules.* (a) *Final-stage manufacturers and alterers.* A final-stage manufacturer or alterer may, at its option, comply with the requirements set forth in S14.3(a)(1) and (2), instead of the requirements set forth in S14.1.1 through S14.1.2.

(1) Vehicles manufactured on or after September 1, 2000 and before September 1, 2002 are not required to be equipped with the lower anchorages specified in this standard.

(2) Vehicles manufactured on or after September 1, 2002 must be equipped with the lower anchorages specified in this standard.

(b) *Small volume manufacturers.* Vehicles manufactured on or after September 1, 2000 and before September 1, 2002 that are manufactured by a manufacturer that produces fewer than 5,000 vehicles worldwide annually are not required to provide the lower anchorages specified in this standard.

S14.4 For the purposes of calculating average annual production of vehicles for each manufacturer and the number of vehicles manufactured by each manufacturer under S14.1.1 and S14.1.2, each vehicle that is excluded from the requirement to provide child restraint anchorage systems is not counted.

S15 *Alternative to complying with the requirements of S9.* As an alternative to complying with the requirements of S9, a vehicle manufactured on or after September 1, 1999 and before September

1, 2004 may, at the manufacturer's option (with said option irrevocably selected prior to, or at the time of, certification of the vehicle), meet the requirements in S15 of this standard. Vehicles manufactured on or after September 1, 2004 must meet the requirements of S9 of this standard.

S15.1 *Dimensions and installation requirements.*

S15.1.1 *General.* The vehicle anchorages are positioned near the seat bight. The location of the anchorages is defined with respect to the CRF. If the vehicle seat is adjustable, it is adjusted as recommended by the vehicle manufacturer for use with child restraint systems.

S15.1.2 *Anchorage dimensions and location.*

S15.1.2.1 The lower anchorages shall consist of two bars that—

(a) Are 6 mm ±.1 mm in diameter;

(b) Are straight, horizontal and transverse;

(c) Are not less than 25 mm in length;

(d)–(e) [Reserved]

(f) Are permanently attached to the vehicle or vehicle seat such that they can only be removed by use of a tool, such as a screwdriver or wrench.

S15.1.2.2 (a) The anchorage bars are located at the vehicle seating position with the aid of and with respect to the CRF rearward extensions, with the CRF placed against or near the vehicle seat back. With the CRF attached to the anchorages and resting on the seat cushion, the bottom surface shall have attitude angles within the limits in the following table, angles measured relative to the vehicle horizontal, longitudinal and transverse reference planes.

TABLE TO S15.1.2.2(a)

Pitch	15° ±10°
Roll	0° ±5°
Yaw	0° ±10°

NOTE: An explanation of the above angles is given in Figure 1.

(b) With adjustable seats adjusted as described in S15.1.2.2(c), each lower anchorage bar shall be located so that a vertical transverse plane intersecting the center of the bar is:

(1) Not more than 70 mm behind point Z of the CRF, measured parallel to the bottom surface of the CRF and to the center of the bar, with the CRF rear surface against the seat back; and

(2) Not less than 120 mm behind the vehicle seating reference point, measured horizontally and to the center of the bar. (NOTE: To facilitate installation of the CRF in a vehicle seat, the CRF may be constructed of smaller separable parts and assembled in the vehicle seat. Alternatively, vehicle components may be removed to allow access.)

(c) Adjustable seats are adjusted as recommended by the vehicle manufacturer for use with child restraint systems.

S15.2 *Static Strength Requirements.*

S15.2.1 The strength of the anchorages shall be determined using the procedure of S15.3 to apply forces to the SFAD 2, installed in the vehicle seating position and engaged with the anchorages. The vehicle seat shall be installed in the vehicle, or in sufficient parts of the vehicle so as to be representative of the strength and rigidity of the vehicle structure. If the seat is adjustable, it shall be placed in the position recommended by the vehicle manufacturer for use with child restraint systems. If no adjusted position is recommended, the seat shall be placed in any position, at the agency's option.

S15.2.2 Horizontal excursion of point X during application of the 8 kN and 5 kN forces must be not more than 125 mm, after preloading the device. The amount of displacement is measured relative to an undisturbed point on the vehicle body.

S15.3 *Forces and directions.*

S15.3.1 A rearward force of 135 N ±15 N shall be applied to the center of the lower front crossbar of SFAD 2 to press the device against the seat back as the fore-aft position of the rearward extensions of the SFAD is adjusted to remove any slack or tension. Forces shall be applied to SFAD 2 in forward and lateral directions according to the following table.

TABLE TO S15.3.1—DIRECTIONS OF TEST FORCES

Forward.	0° ±5°	8 kN ±0.25 kN

TABLE TO S15.3.1—DIRECTIONS OF TEST FORCES—Continued

Lateral	75° ±5° (to both sides of straight forward).	5 kN ±0.25 kN

S15.3.2 Forces in the forward direction shall be applied with an initial force application angle of 10 ±5 degrees above the horizontal. Lateral forces shall be applied horizontally (0° ±5°). A pre-load force of 500 N ±25 N shall be applied at the prescribed loading point (point X) in Figure 17. The force shall be increased to 8 kN ±0.25 kN for forward tests, or to 5 kN ±0.25 kN for lateral tests. Full application of the force shall be achieved within a time period of 2 seconds or less. The force shall be maintained for a period of 0.25 seconds ±0.05 seconds.

S15.3.3 *Provisions for simultaneous and sequential testing.* (a) If anchorages for more than one child restraint anchorage system are installed in the vehicle seat assembly and not directly into the vehicle structure, the forces described in S15.3 may, at the agency's option, be applied simultaneously to SFADs engaged with the anchorages. However, that force may not be applied simultaneously to SFADs engaged at any two adjacent seating positions whose midpoints are less than 400 mm apart, as measured in accordance with S15.3.3(a)(1) and (2) and Figure 20.

(1) The midpoint of the seating position lies in the vertical longitudinal plane that is equidistant from vertical longitudinal planes through the geometric center of each of the two lower anchorages at the seating position.

(2) Measure the distance between the vertical longitudinal planes passing through the midpoints of the adjacent seating positions, as measured along a line perpendicular to the planes.

(b) The lower anchorages of a particular child restraint anchorage system will not be tested if one or both of the anchorages have been previously tested under this standard.

S15.4 *Marking and conspicuity of the lower anchorages.* At least one anchorage bar (when deployed for use), one guidance fixture, or one seat marking feature shall be readily visible to the person installing the CRF. If guidance fixtures are used to meet this requirement, the fixture(s) (although removable) must be installed. Storable anchorages shall be provided with a telltale or label that is visible when the anchorage is stored.

S16. *Phase-in of strength requirements for vehicles manufactured on or after September 1, 2004 and before September 1, 2005.* At anytime during the production year ending August 31, 2005, each manufacturer shall, upon request from the Office of Vehicle Safety Compliance, provide information identifying the vehicles (by make, model and vehicle identification number) that have been certified as complying with S6.3.1 or S6.3.4, and with S9.4 or S15.2 and S15.3. The manufacturer's designation of a vehicle as meeting the particular requirement is irrevocable.

S16.1 *Tether anchorage phase-in of strength requirements.* For vehicles manufactured on or after September 1, 2004 and before September 1, 2005, the number of vehicles complying with S6.3.1 shall be not less than 90 percent of:

(a) the manufacturer's average annual production of vehicle manufactured on or after September 1, 2001 and before September 1, 2004; or

(b) The manufacturer's production on or after September 1, 2004 and before September 1, 2005.

S16.2 *Lower anchorages phase-in of strength requirements.*

For vehicles manufactured on or after September 1, 2004 and before September 1, 2005, the number of vehicles complying with S9.4 shall be not less than 90 percent of:

(a) The manufacturer's average annual production of vehicle manufactured on or after September 1, 2001 and before September 1, 2004; or

(b) The manufacturer's production on or after September 1, 2003 and before September 1, 2004.

S16.3 *Vehicles produced by more than one manufacturer.*

S16.3.1 For the purpose of calculating average annual production of vehicles for each manufacturer and the number of vehicles manufactured by each manufacturer under S16.1 and S16.2, a vehicle produced by more than one manufacturer shall be attributed to a single manufacturer as follows, subject to S16.3.2.

(a) A vehicle which is imported shall be attributed to the importer.

(b) A vehicle manufactured in the United States by more than one manufacturer, one of which also markets the vehicle, shall be attributed to the manufacturer that markets the vehicle.

S16.3.2 A vehicle produced by more than one manufacturer must be attributed to any one of the vehicle's manufacturers specified by an express written contract, reported to the National Highway Traffic Safety Administration under 49 CFR part 585, between the manufacturer so specified and the manufacturer to which the vehicle would otherwise be attributed under S16.3.1.

S16.4 *Alternative phase-in schedules.*

(a) *Final-stage manufacturers and alterers.* A final-stage manufacturer or alterer may, at its option, comply with the requirements set forth in S16.4(a)(1) and (2), instead of the requirements set forth in S16.1 through S16.2.

(1) Vehicles manufactured on or after September 1, 2004 and before September 1, 2005 may meet the requirements of S6.3.4 instead of S6.3.1, and may meet the requirements of S15.2 and S15.3 instead of S9.4.

(2) Vehicles manufactured on or after September 1, 2005 must meet the requirements of S6.3.4 and S9.4.

(b) *Small volume manufacturers.* Vehicles manufactured on or after September 1, 2004 and before September 1, 2005 that are manufactured by a manufacturer that produces fewer than 5,000 vehicles worldwide annually may meet the requirements of S6.3.4 instead of S6.3.1, and may meet the requirements of S15.2 and S15.3 instead of S9.4. Vehicles manufactured on or after September 1, 2005 must meet the requirements of S6.3.4 and S9.4.

FIGURES TO §571.225

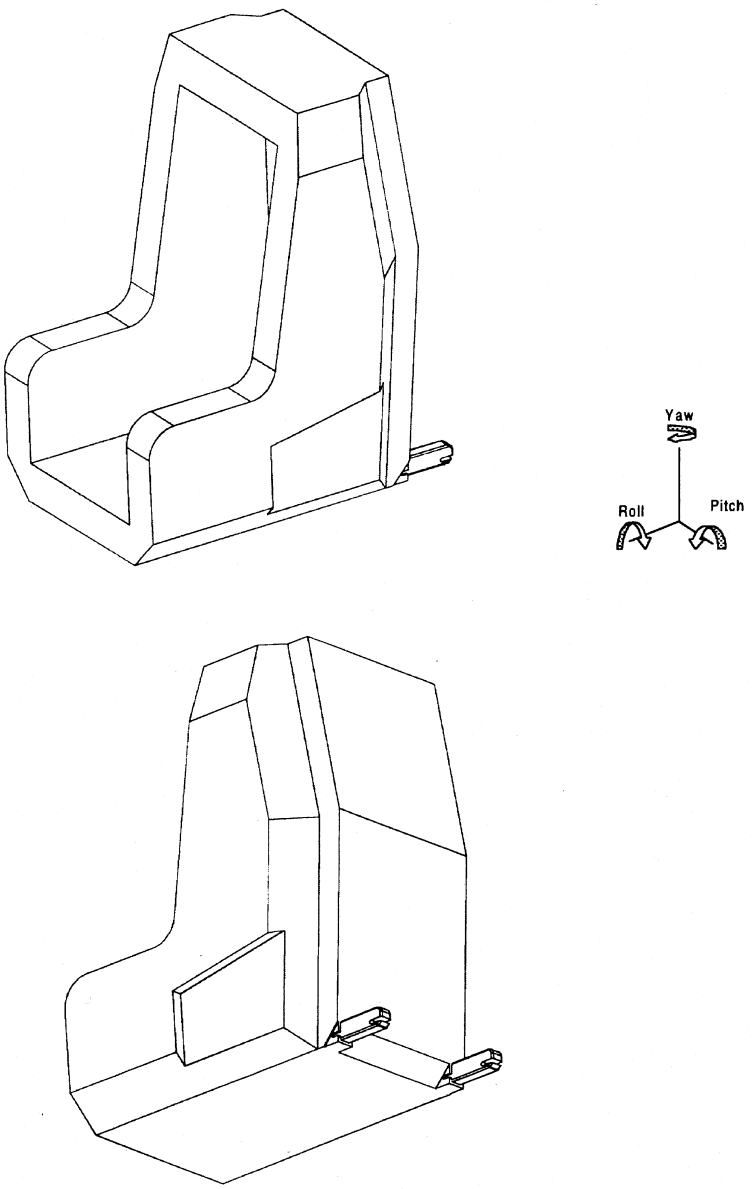

Figure 1 – Child restraint fixture (CRF)

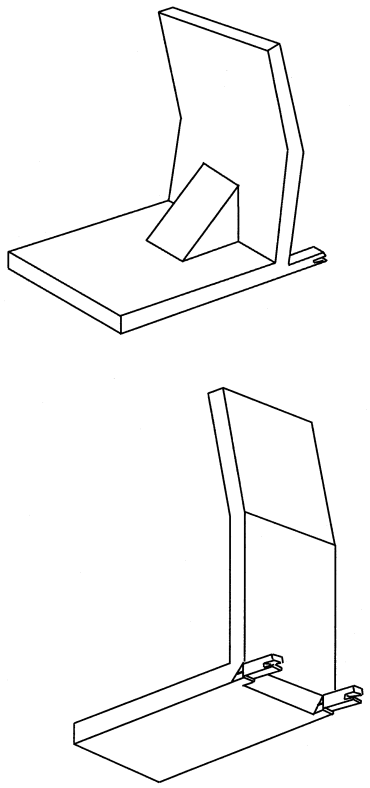

Figure 1A - Child Restraint Fixture (CRF) with Side and Top Frames Removed

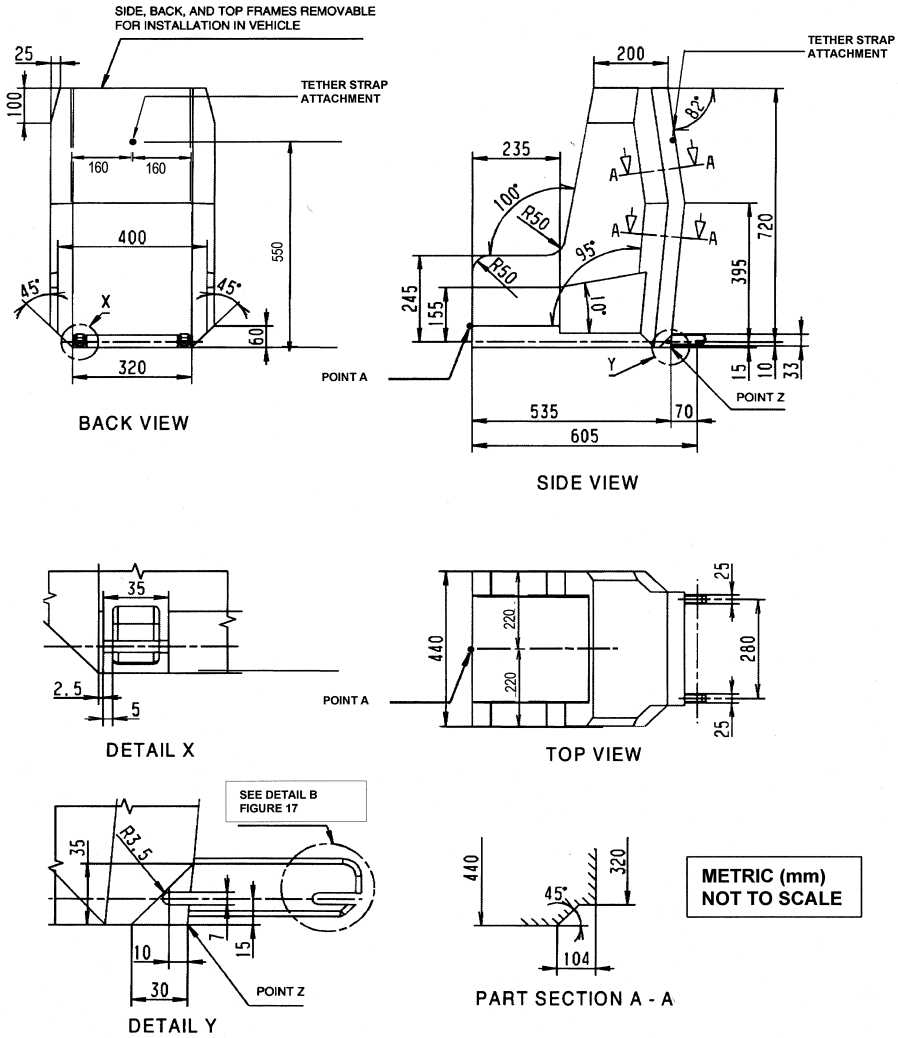

Note:
1. Mass of CRF 5 to 8 kg

Figure 2 - Child restraint fixture (CRF)

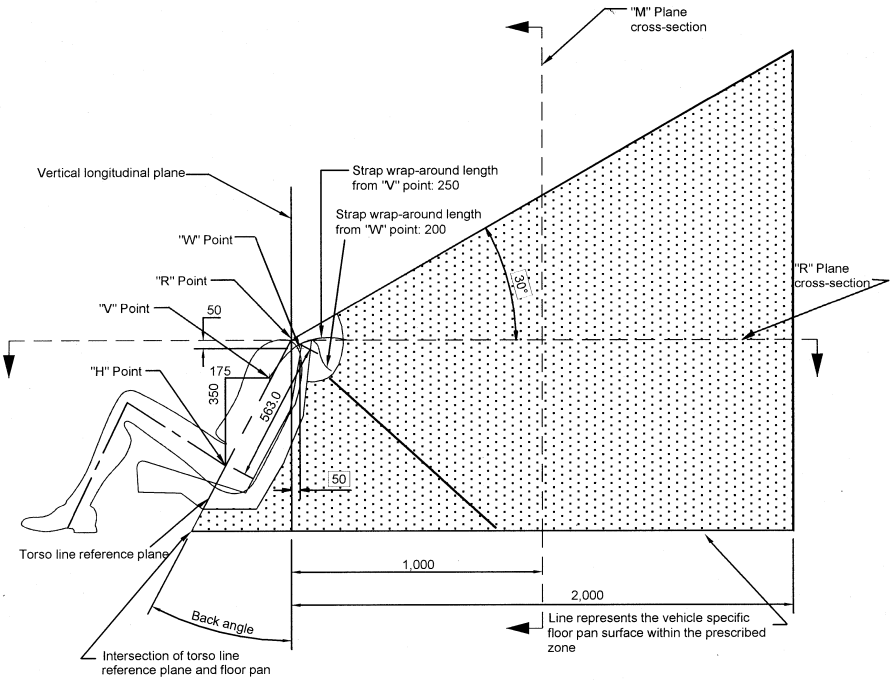

Notes

1. Dimensions in mm, except where otherwise indicated
2. Portion of user-ready tether anchorage that is designed to bind with the tether strap hook to be located within shaded zone
3. Drawing not to scale
4. "R" Point: Shoulder reference point
5. "V" Point: V-reference point, 350 mm vertically above and 175 mm horizontally back from H-point
6. "W" Point: W-reference point, 50 mm vertically below and 50 mm horizontally back from "R" Point
7. "M" Plane: M-reference plane, 1 000 mm horizontally back from "R" Point

Figure 3 -- Side View, User-ready Tether Anchorage Location

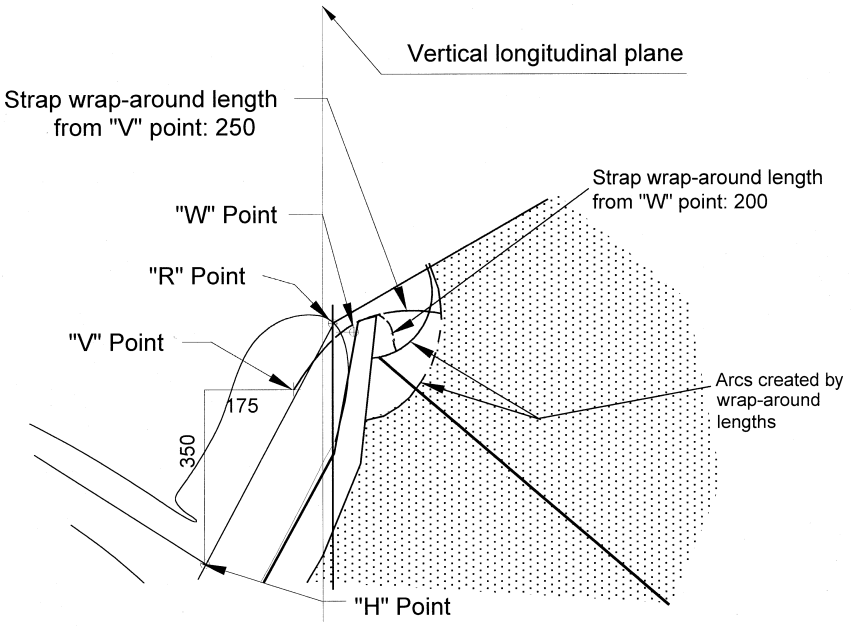

Notes

1. Dimensions in mm, except where otherwise indicated
2. Portion of user-ready tether anchorage that is designed to bind with the tether strap hook to be located within shaded zone
3. Drawing not to scale
4. "R" Point: Shoulder reference point
5. "V" Point: V-reference point, 350 mm vertically above and 175 mm horizontally back from H-point
6. "W" Point: W-reference point, 50 mm vertically below and 50 mm horizontally back from "R" Point
7. "M" Plane: M-reference plane, 1 000 mm horizontally back from "R" Point

Figure 4 -- Enlarged Side View of Strap Wrap-around Area, User-ready Tether Anchorage Location

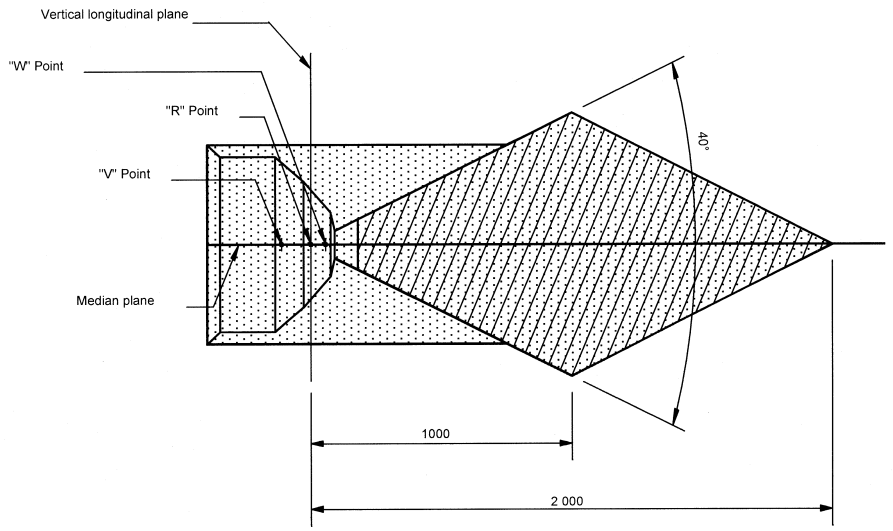

1. Dimensions in mm, except where otherwise indicated
2. Portion of user-ready tether anchorage that is designed to bind with the tether strap hook to be located within shaded zone
3. Drawing not to scale
4. "R" Point: Shoulder reference point
5. "V" Point: V-reference point, 350 mm vertically above and 175 mm horizontally back from H-point.
6. "W" Point: W-reference point, 50 mm vertically below and 50 mm horizontally back from "R" Point

Figure 5. Plan View (R-plane Cross Section), User-ready Tether Anchorage Location

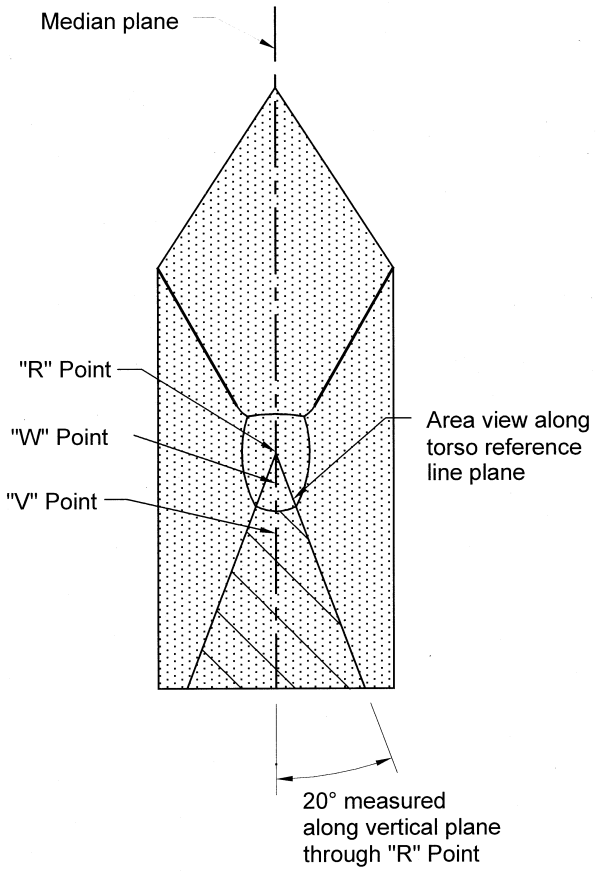

Notes
1. Portion of user-ready tether anchorage that is designed to bind with the tether strap hook to be located within shaded zone
2. Drawing not to scale
3. "R" Point: Shoulder reference point
4. "V" Point: V-reference point, 350 mm vertically above and 175 mm horizontally back from H-point
5. "W" Point: W-reference point, 50 mm vertically below and 50 mm horizontally back from "R" Point

Figure 6 -- Front View, User-ready Tether Anchorage Location

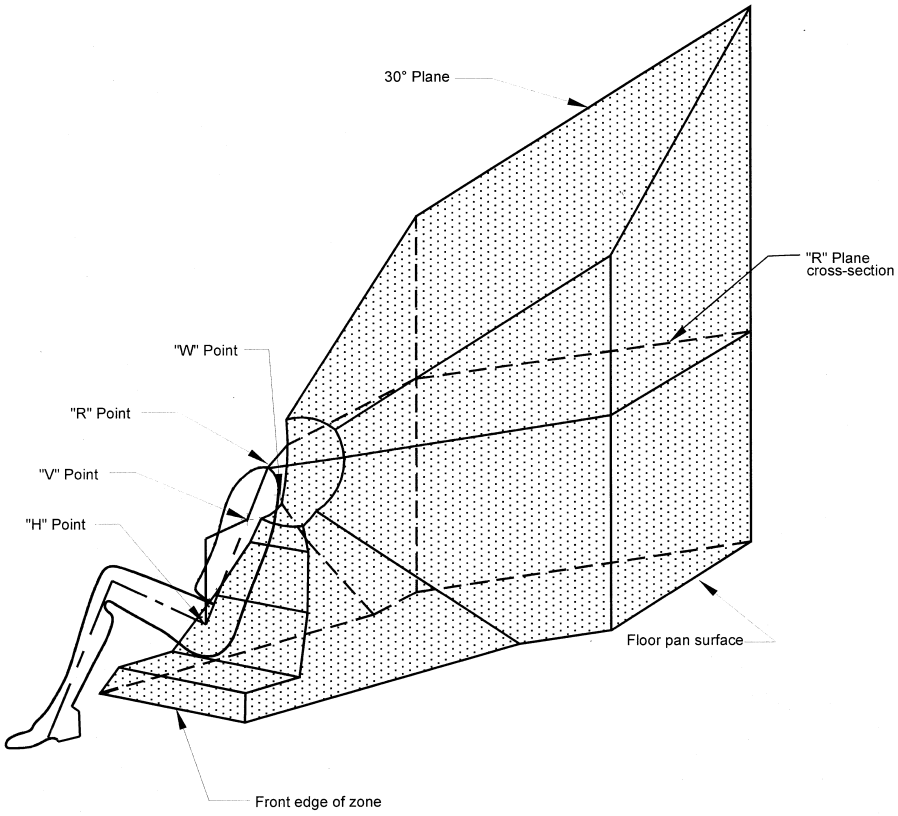

Notes

1. Portion of user-ready tether anchorage that is designed to bind with the tether strap hook to be located within shaded zone
2. Drawing not to scale
3. "R" Point: Shoulder reference point
4. "V" Point: V-reference point, 350 mm vertically above and 175 mm horizontally back from H-point
5. "W" Point: W-reference point, 50 mm vertically below and 50 mm horizontally back from "R" Point

Figure 7 -- Three-dimensional Schematic View of User-ready Tether Anchorage Location

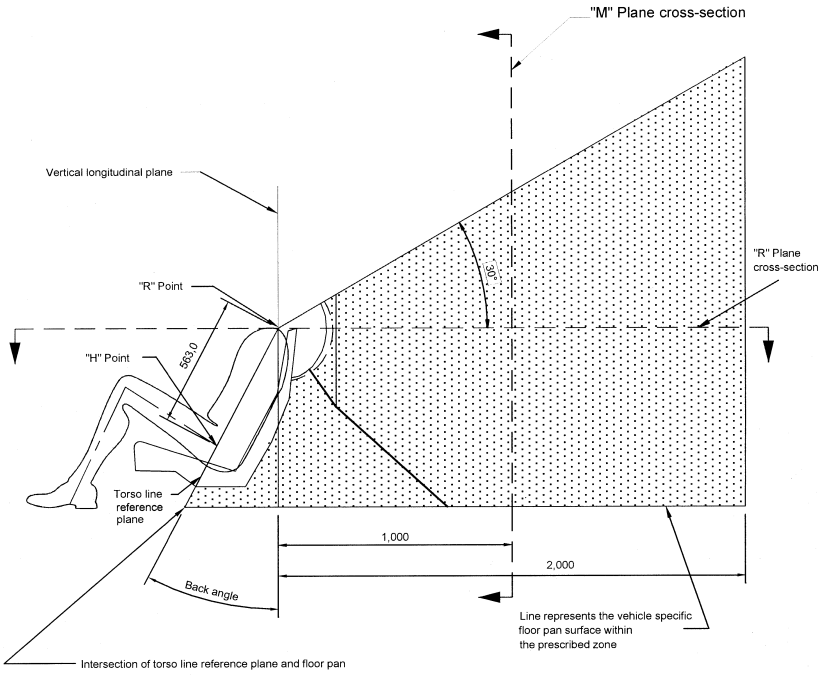

Notes

1. Dimensions in mm, except where otherwise indicated
2. Portion of user-ready tether anchorage that is designed to bind with the tether strap hook to be located within shaded zone
3. Drawing not to scale
4. "R" Point: Shoulder reference point
5. "M" Plane: M-reference plane, 1 000 mm horizontally back from "R" Point

Figure 8 -- Side View, User-ready Tether Anchorage Optional Location for Passenger Cars and Multipurpose Passenger Vehicles until September 1, 2004

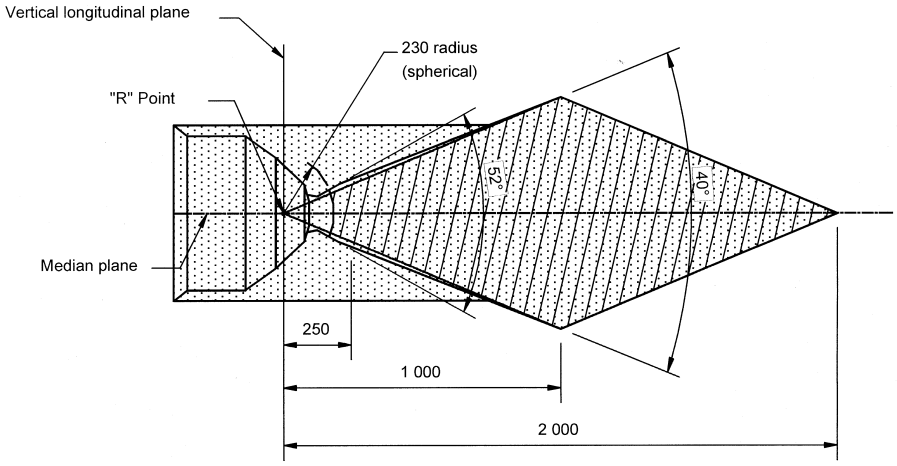

Notes

1. Dimensions in mm, except where otherwise indicated
2. Portion of user-ready tether anchorage that is designed to bind with the tether strap hook to be located within shaded zone
3. Drawing not to scale
4. "R" Point: Shoulder reference point

Figure 9 -- Plan View (R-point Level), User-ready Tether Anchorage Optional Location for Passenger Cars and Multipurpose Passenger Vehicles until September 1, 2004

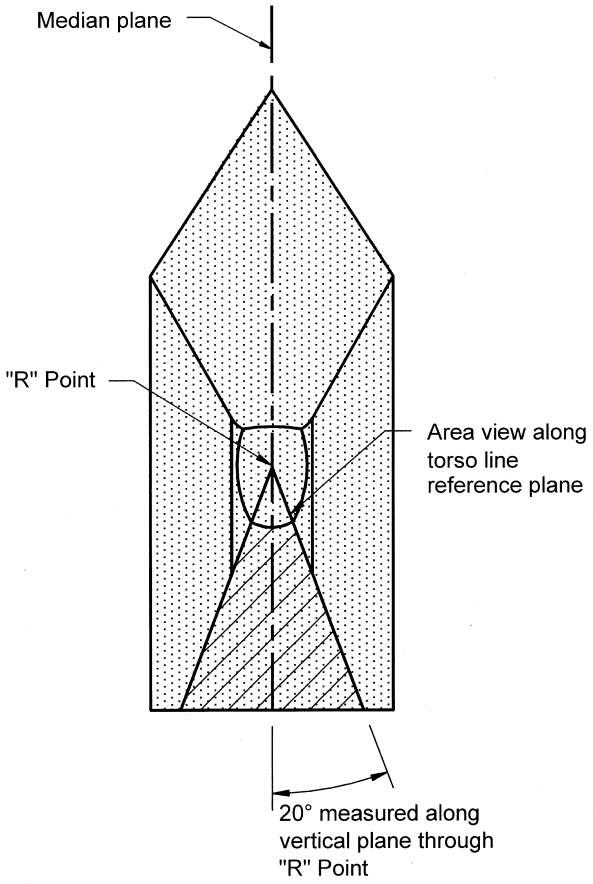

Notes

1. Portion of user-ready tether anchorage that is designed to bind with the tether strap hook to be located within shaded zone
2. Drawing not to scale
3. "R" Point: Shoulder reference point

Figure 10 -- Front View, User-ready Tether Anchorage Optional Location for Passenger Cars and Multipurpose Passenger Vehicles until September 1, 2004

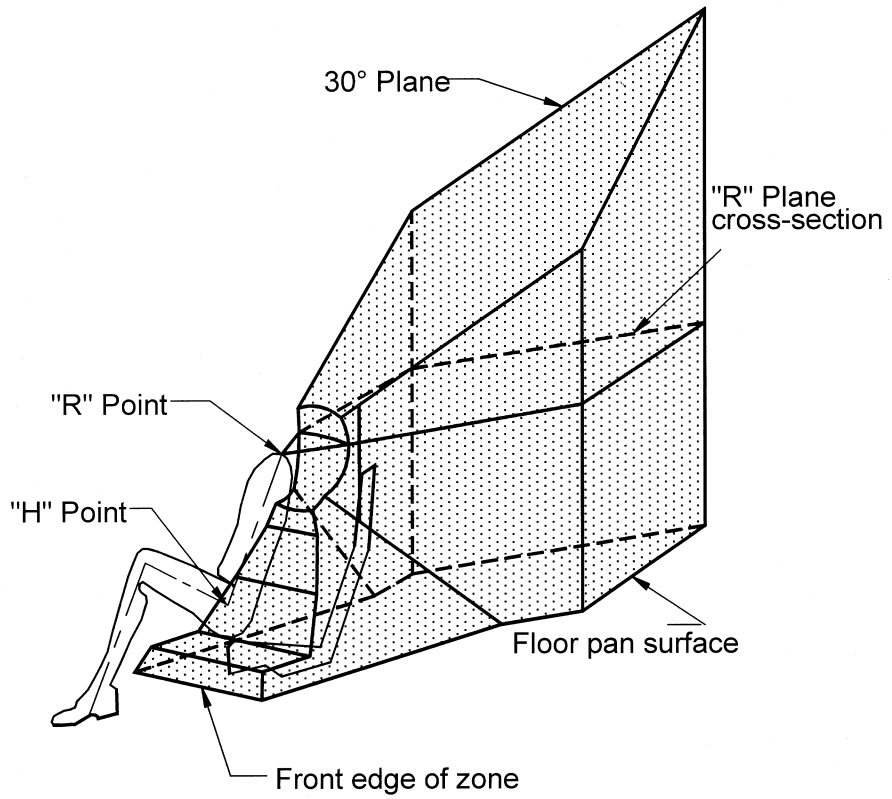

Notes

1. Portion of user-ready tether anchorage that is designed to bind with the tether strap hook to be located within shaded zone
2. Drawing not to scale
3. "R" Point: Shoulder reference point

Figure 11 -- Three-dimensional Schematic View of User-ready Tether Anchorage Optional Location for Passenger Cars and Multipurpose Passenger Vehicles until September 1, 2004

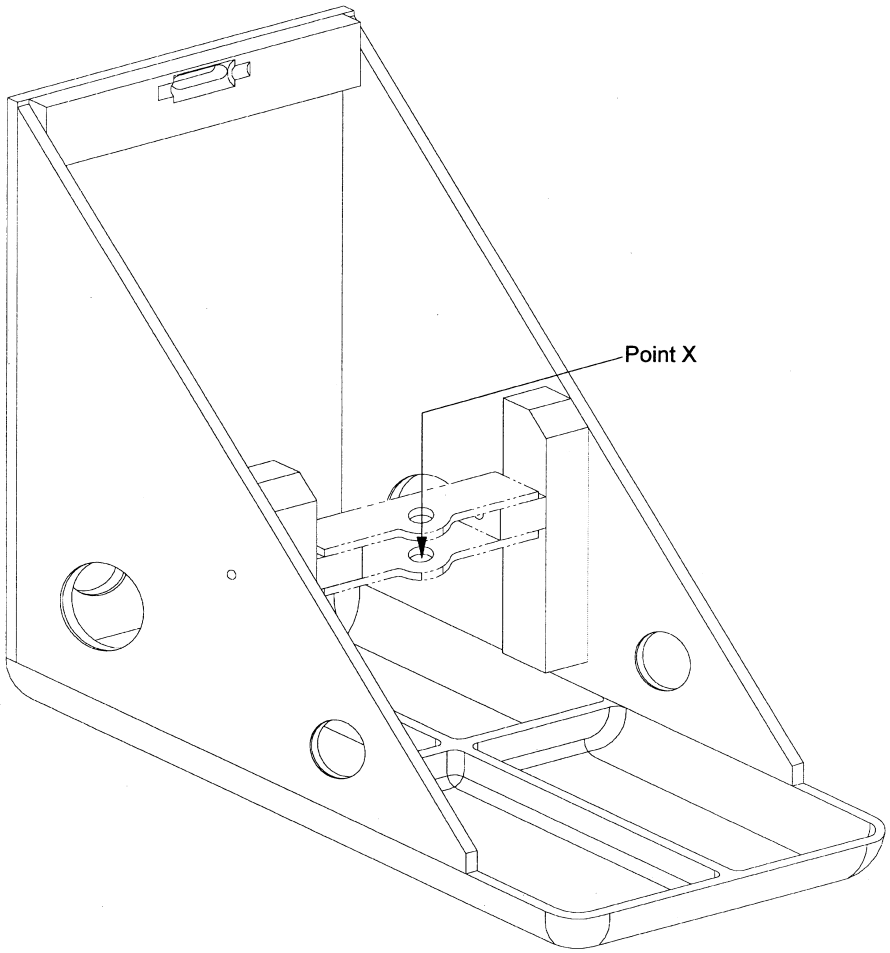

Figure 12 – Three Dimensional Schematic View of the Static Force Application Device 1 (SFAD 1)

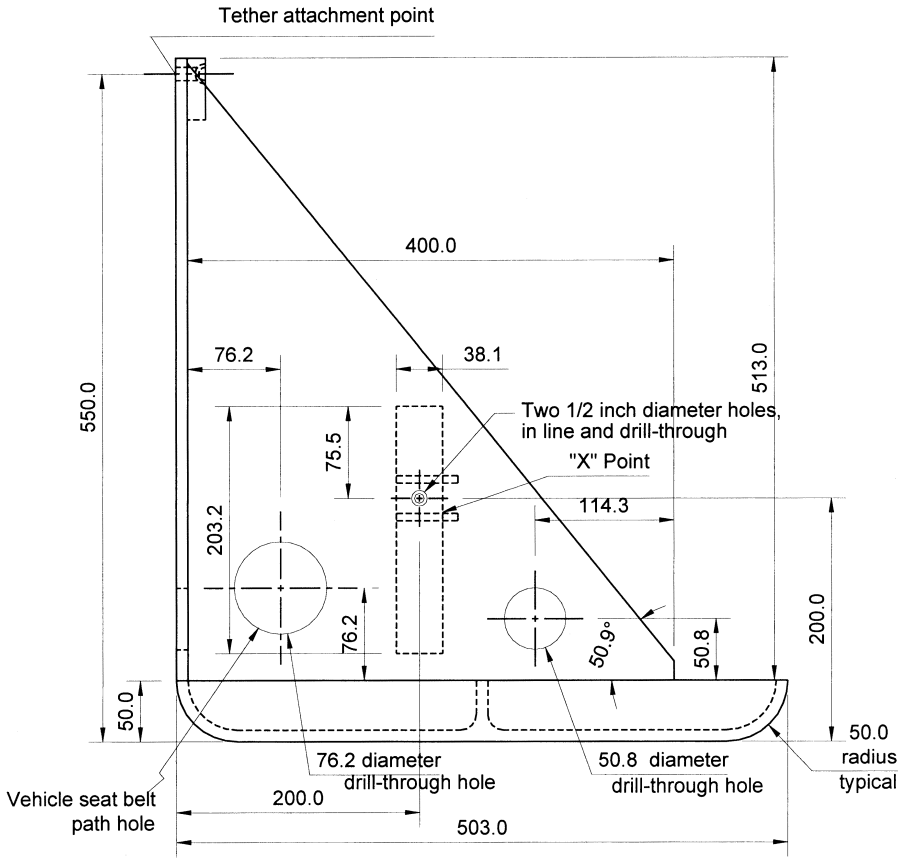

Notes

1. Material: 6061-T6-910 Aluminum
2. Dimensions in mm, except where otherwise indicated
3. Drawing not to scale
4. Break all outside corners

Figure 13 -- Side View, Static Force Application Device 1 (SFAD 1)

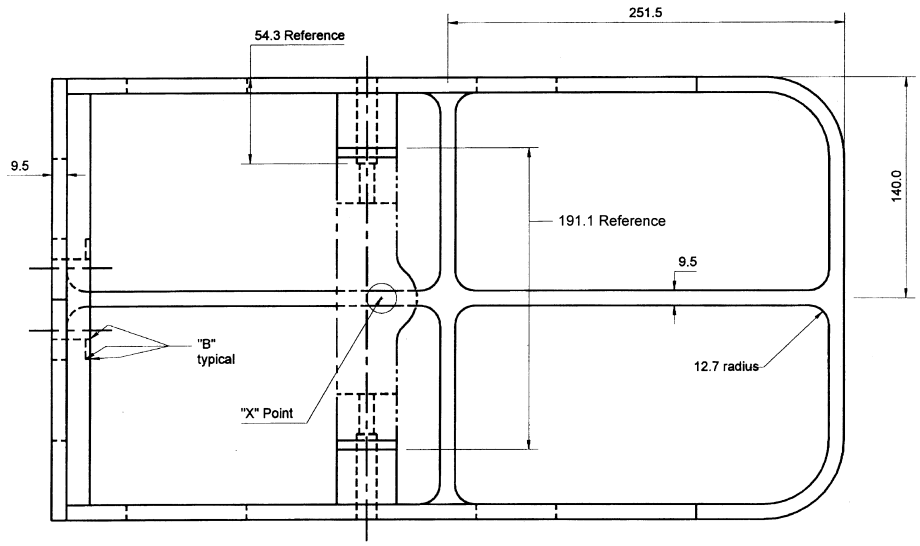

Notes

1. Material: 6061-T6-910 Aluminum
2. Dimensions in mm, except where otherwise indicated
3. Drawing not to scale
4. Break all outside corners and lightning hole edges 1.5 mm approximately.
5. Break edges of vehicle seat belt path holes at least 4 mm
6. "B" = approximately 0.8 mm

Figure 14 -- Plan View, Static Force Application Test Device 1 (SFAD 1)

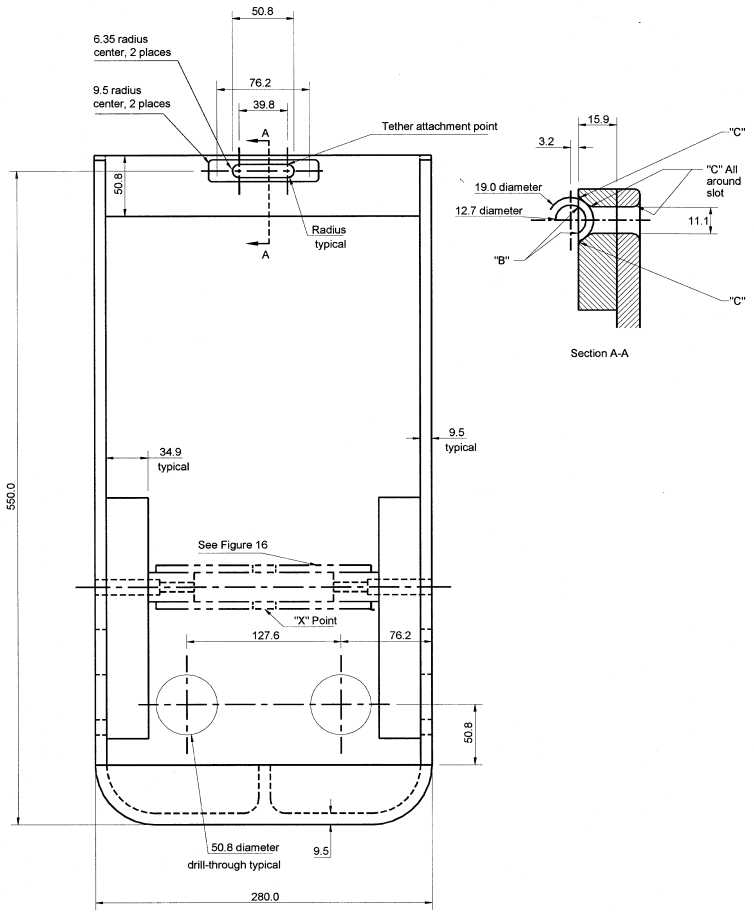

Notes

1. Material: 6061-T6-910 Aluminum
2. Dimensions in mm, except where otherwise indicated
3. Drawing not to scale
4. “B” = approximately 0.8 mm
5. “C” = approximately 3.2 mm

Figure 15 -- Front View, Static Force Application Device 1 (SFAD 1)

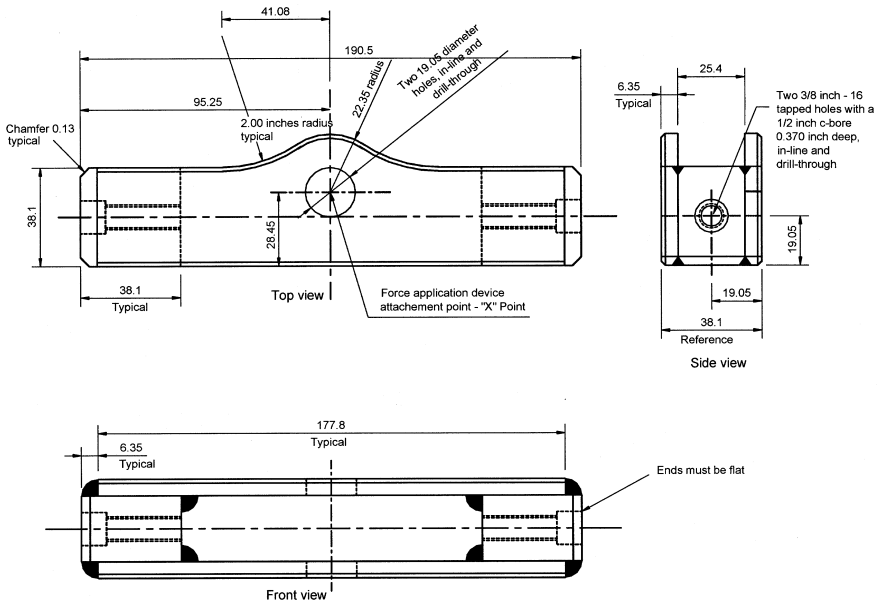

Notes
1. Material: Steel
2. Dimensions in mm, except where otherwise indicated
3. Drawing not to scale
4. Break all outside corners approximately 1.5 mm
5. Surfaces and edges are not to be machined unless otherwise specified for tolerance.
6. Saw-cut or stock size material whenever possible.
7. Construction to be securely welded.

Figure 16 -- Cross Bar, Static Force Application Device 1 (SFAD 1)

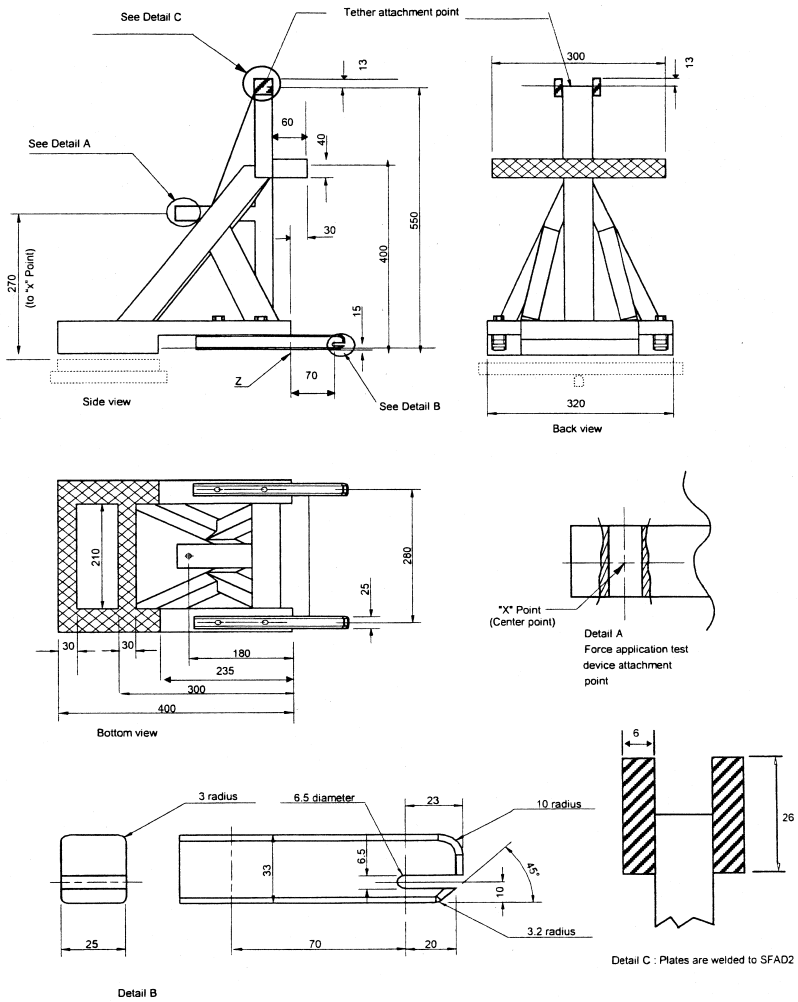

Notes:
1. Drawing not to scale
2. Dimensions in mm, except where otherwise indicated
3. Device stiffness satisfied when using a securely welded construction consisting of rectangular 3 mm steel tubing and 6 mm thick load application plate
4. If construction not as per note 3, stiffness of device is satisfied if movement of point "X" is not more than 2 mm in any direction when forces are applied as specified in S15.2.1, with device attached to rigid anchorage bars and the front cross member supported by a rigid bar that is held at the center by a longitudinal pivot 25 mm below the SFAD2 base (as shown in broken lines) to allow bending and twisting of the base of the device. Any deformation of the anchorage bars to be excluded from the measurements of the movement of point "X".

Figure 17- Side, Back and Bottom Views, ISO 13216-1 Static Force Application Device 2 (SFAD 2)

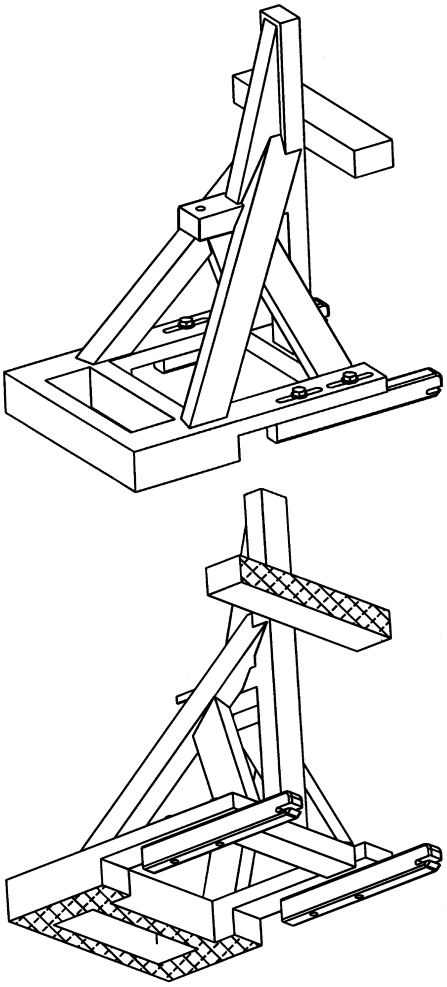

Figure 18 -- Three-dimensional Schematic Views of the ISO 13216-1 Static Force Application Device 2 (SFAD 2)

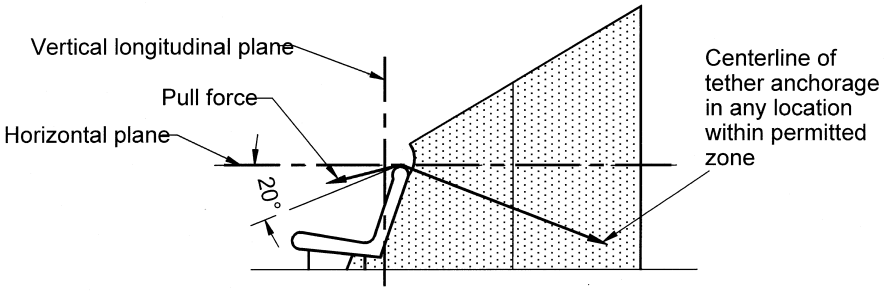

Figure 19 – Side View, Optional Tether Anchorage Test for Passenger Cars until September 1, 2004

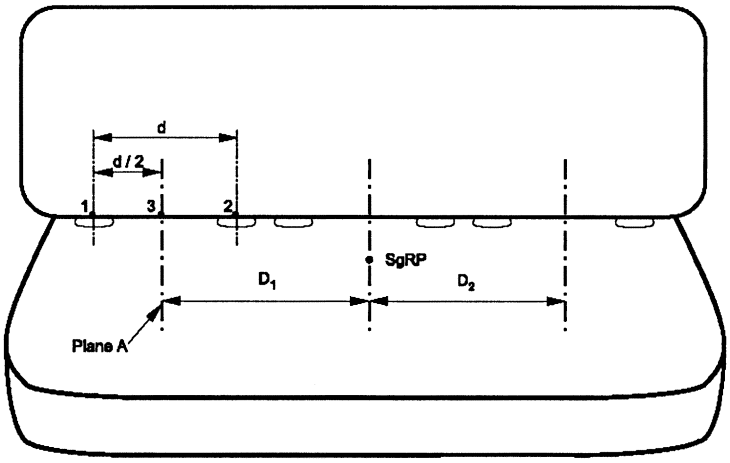

d = center to center distance between lower anchorages for a given seating position (nominally 280 mm).

D = distance between vertical longitudinal planes located midway between the anchorages for a given seating position.

SgRP = Seating reference point, as defined in 49 CFR §571.3.

Figure 20 – Measurement of Distance Between Adjacent Seating Positions for Use in Simultaneous Testing

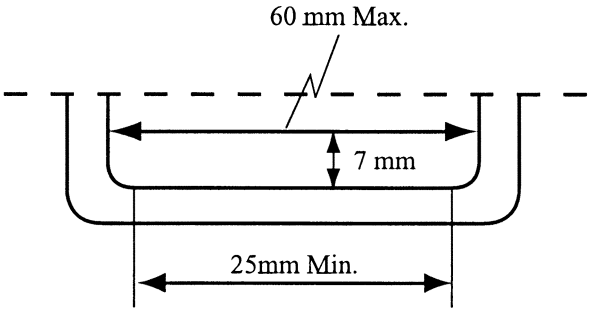

Configuration shown is for illustration purposes only.

Figure 21. Length of Lower Anchorage Bars

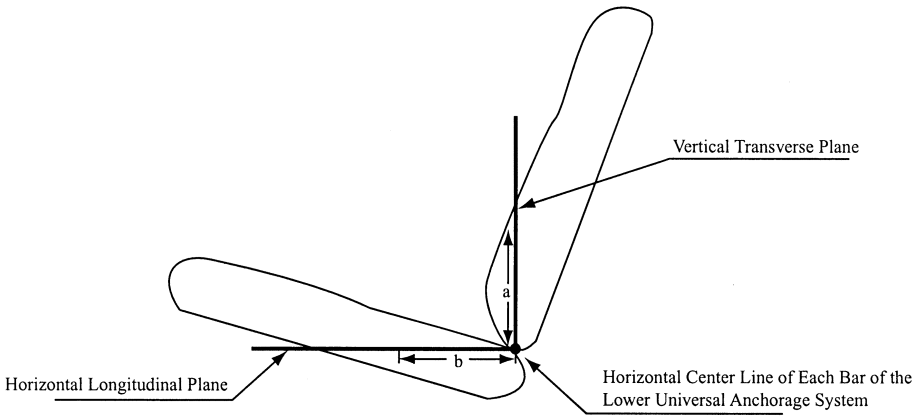

Notes:

1. Drawing not to scale.
2. 50 mm ≤ a ≤ 100 mm.
3. b = 100 mm ± 25 mm.

Figure 22. Placement of Symbol on the Seat Back
and Seat Cushion of a vehicle

[64 FR 10823, Mar. 5, 1999, as amended at 64 FR 47587, Aug. 31, 1999; 65 FR 46640, July 31, 2000; 68 FR 24667, May 8, 2003; 68 FR 38226, June 27, 2003; 69 FR 48823, Aug. 11, 2004; 69 FR 60565, Oct. 12, 2004; 69 FR 70915, Dec. 8, 2004; 77 FR 768, Jan. 6, 2012]