AUTHENTICATED
U.S. GOVERNMENT
INFORMATION
GPO

[77 FR 29911, May 21, 2012]

FIGURES 18A, 18B AND 18C TO PART 223—LARGE FRAME TED ESCAPE OPENING; MINIMUM DIMENSIONS USING ALL-BAR CUTS (TRIANGULAR CUTS); LARGE FRAME TED ESCAPE OPENING; MINIMUM DIMENSIONS USING ALL-BAR CUTS AND LEADING EDGE CUT; LARGE FRAME TED ESCAPE OPENING; MINIMUM DIMENSIONS USING ALL-POINTS SIDE CUTS (RECTANGULAR CUT)

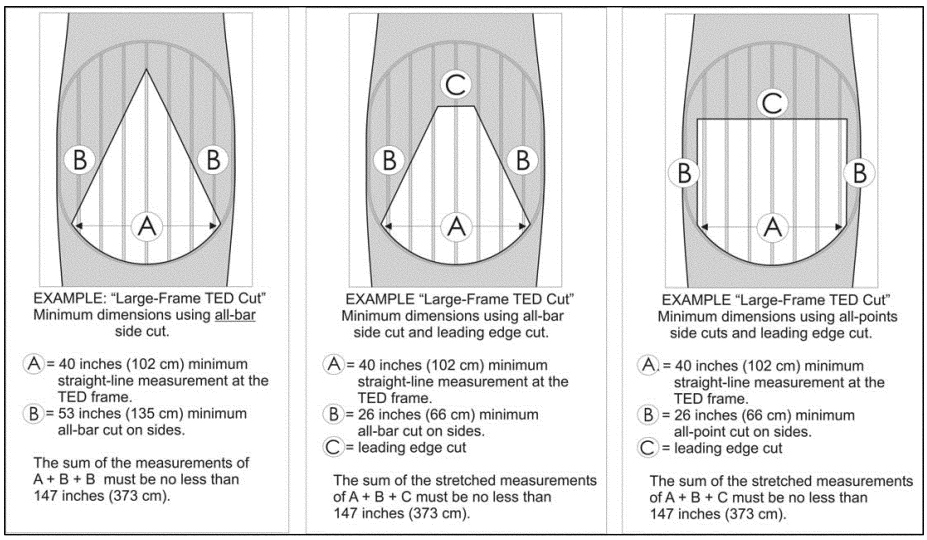

FIGURES 18a, 18b, AND 18c TO PART 223. LARGE FRAME TED ESCAPE OPENING: MINIMUM DIMENSIONS USING ALL-BAR CUTS (TRIANGULAR CUT); LARGE FRAME TED ESCAPE OPENING: MINIMUM DIMENSIONS USING ALL-BAR CUTS AND LEADING EDGE CUT; LARGE FRAME TED ESCAPE OPENING: MINIMUM DIMENSIONS USING ALL-POINTS SIDE CUT (RECTANGULAR CUT)

[77 FR 29912, May 21, 2012]

FIGURES 19A AND 19B TO PART 223—CHAUVIN SHRIMP DEFLECTOR INSTALLATION DETAILS

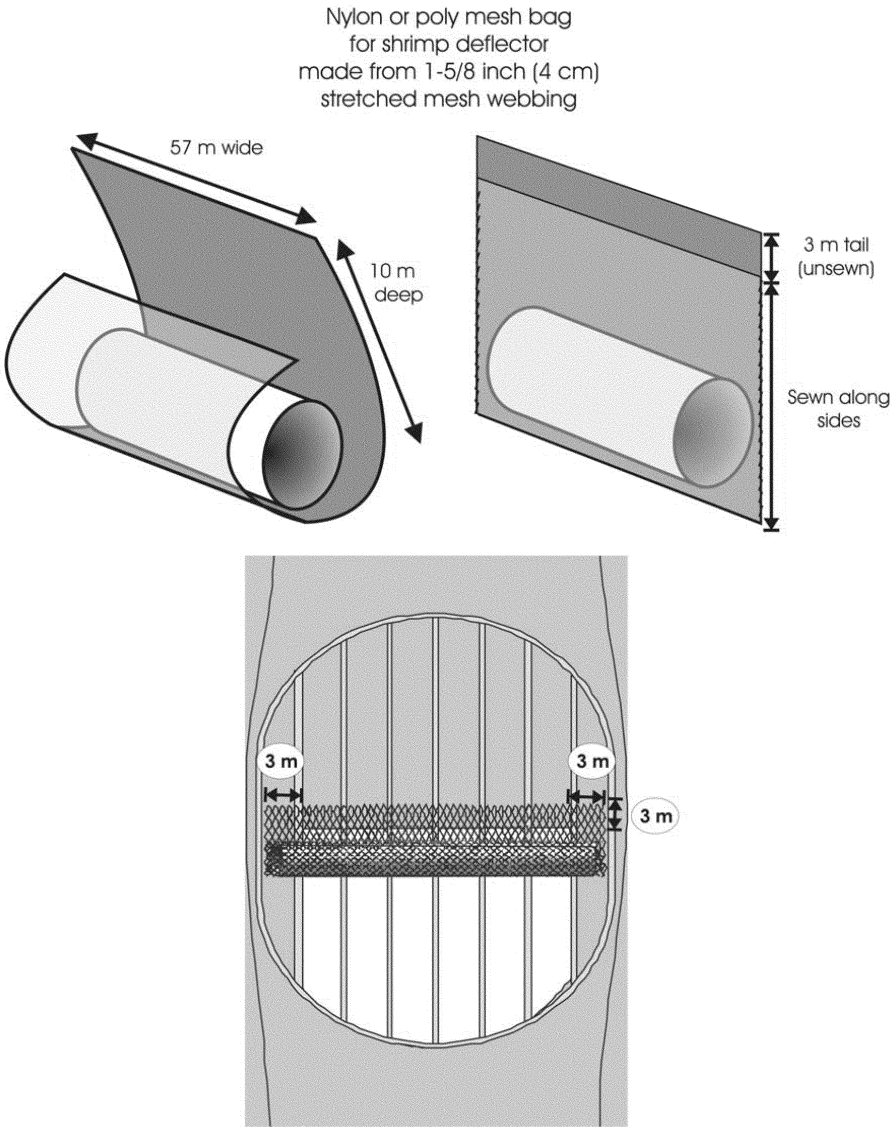

FIGURES 19a AND 19b TO PART 223. CHAUVIN SHRIMP DEFLECTOR INSTALLATION DETAILS

[77 FR 29912, May 21, 2012]

PART 224—ENDANGERED MARINE AND ANADROMOUS SPECIES

Sec.

224.101 Enumeration of endangered marine and anadromous species.
224.102 Permits for endangered marine and anadromous species.
224.103 Special prohibitions for endangered marine mammals.
224.104 Special requirements for fishing activities to protect endangered sea turtles.
224.105 Speed restrictions to protect North Atlantic Right Whales.

AUTHORITY: 16 U.S.C. 1531–1543 and 16 U.S.C. 1361 *et seq*.

SOURCE: 64 FR 14066, Mar. 23, 1999, unless otherwise noted.

§ 224.101 Enumeration of endangered marine and anadromous species.

The marine and anadromous species determined by the Secretary of Commerce to be endangered pursuant to section 4(a) of the Act, as well as species listed under the Endangered Species Conservation Act of 1969 by the Secretary of the Interior and currently under the jurisdiction of the Secretary of Commerce, are the following:

(a) *Marine and anadromous fish*. The following table lists the common and scientific names of endangered species, the locations where they are listed, and the citations for the listings and critical habitat designations.

Species [1]		Where listed	Citation(s) for listing determination(s)	Citation for critical habitat designation
Common name	Scientific name			
Shortnose sturgeon.	*Acipenser brevirostrum.*	Everywhere	32 FR 4001, Mar. 11, 1967.	NA.
Smalltooth sawfish	*Pristis pectinata*	U.S.A.	68 FR 15674, Apr. 1, 2003.	NA.
Totoaba	*Cynoscion macdonaldi.*	Everywhere	44 FR 29480, May 21, 1979.	NA.
Gulf of Maine Atlantic salmon.	*Salmo salar*	U.S.A., ME, Gulf of Maine Distinct Population Segment. The GOM DPS includes all anadromous Atlantic salmon whose freshwater range occurs in the watersheds from the Androscoggin River northward along the Maine coast to the Dennys River, and wherever these fish occur in the estuarine and marine environment. The following impassable falls delimit the upstream extent of the freshwater range: Rumford Falls in the town of Rumford on the Androscoggin River; Snow Falls in the town of West Paris on the Little Androscoggin River; Grand Falls in Township 3 Range 4 BKP WKR, on the Dead River in the Kennebec Basin; the un-named falls (impounded by Indian Pond Dam) immediately above the Kennebec River Gorge in the town of Indian Stream Township on the Kennebec River; Big Niagara Falls on Nesowadnehunk Stream in Township 3 Range 10 WELS in the Penobscot Basin; Grand Pitch on Webster Brook in Trout Brook Township in the Penobscot Basin; and Grand Falls on the Passadumkeag River in Grand Falls Township in the Penobscot Basin. The marine range of the GOM DPS extends from the Gulf of Maine, throughout the Northwest Atlantic Ocean, to the coast of Greenland. Included are all associated conservation hatchery populations used to supplement these natural populations; currently, such conservation hatchery populations are maintained at Green Lake National Fish Hatchery (GLNFH) and Craig Brook National Fish Hatchery (CBNFH). Excluded are landlocked salmon and those salmon raised in commercial hatcheries for aquaculture.	65 FR 69469; November 17, 2000; 74 FR 29344, June 19, 2009.	NA