AUTHENTICATED
U.S. GOVERNMENT
INFORMATION
GPO

Title 10—Energy

(This book contains parts 200 to 499)

Part

CHAPTER II—Department of Energy 202

CHAPTER II—DEPARTMENT OF ENERGY

SUBCHAPTER A—OIL

Part		Page
200–201	[Reserved]	
202	Production or disclosure of material or information	5
205	Administrative procedures and sanctions	6
207	Collection of information	47
209	International voluntary agreements	52
210	General allocation and price rules	57
212	Mandatory petroleum price regulations	64
215	Collection of foreign oil supply agreement information	64
216	Materials allocation and priority performance under contracts or orders to maximize domestic energy supplies	66
217	Energy priorities and allocations system	70
218	Standby mandatory international oil allocation	90
220	[Reserved]	
221	Priority supply of crude oil and petroleum products to the Department of Defense under the Defense Production Act	95

SUBCHAPTER B—CLIMATE CHANGE

300	Voluntary Greenhouse Gas Reporting Program: General guidelines	99

SUBCHAPTER C [RESERVED]

SUBCHAPTER D—ENERGY CONSERVATION

400–417	[Reserved]	
420	State energy program	121
429	Certification, compliance, and enforcement for consumer products and commercial and industrial equipment	135
430	Energy conservation program for consumer products	216
431	Energy efficiency program for certain commercial and industrial equipment	558

Part		Page
433	Energy efficiency standards for new Federal commercial and multi-family high-rise residential buildings	688
434	Energy code for new Federal commercial and multi-family high rise residential buildings	691
435	Energy efficiency standards for new Federal low-rise residential buildings	752
436	Federal energy management and planning programs	758
440	Weatherization assistance for low-income persons	785
445	[Reserved]	
451	Renewable energy production incentives	807
452	Production incentives for cellulosic biofuels	812
455	Grant programs for schools and hospitals and buildings owned by units of local government and public care institutions	816
456	[Reserved]	
470	Appropriate Technology Small Grants Program	847
473	Automotive propulsion research and development	852
474	Electric and Hybrid Vehicle Research, Development, and Demonstration Program; petroleum-equivalent fuel economy calculation	856
490	Alternative fuel transportation program	857
491–499	[Reserved]	

SUBCHAPTER A—OIL

PARTS 200–201 [RESERVED]

PART 202—PRODUCTION OR DISCLOSURE OF MATERIAL OR INFORMATION

Subpart A [Reserved]

Subpart B—Production or Disclosure in Response to Subpoenas or Demands of Courts or Other Authorities

Sec.
202.21 Purpose and scope.
202.22 Production or disclosure prohibited unless approved by appropriate DOE official.
202.23 Procedure in the event of a demand for production or disclosure.
202.24 Final action by the appropriate DOE official.
202.25 Procedure where a decision concerning a demand is not made prior to the time a response to the demand is required.
202.26 Procedure in the event of an adverse ruling.

AUTHORITY: Freedom of Information Act, 5 U.S.C. 552; Emergency Petroleum Allocation Act of 1973, Pub. L. 93–159; Federal Energy Administration Act of 1974, Pub. L. 93–275, E.O. 11790, 39 FR 23185.

Subpart A [Reserved]

Subpart B—Production or Disclosure in Response to Subpoenas or Demands of Courts or Other Authorities

SOURCE: 39 FR 35472, Mar. 13, 1974, unless otherwise noted.

§ 202.21 Purpose and scope.

(a) This subpart sets forth the procedures to be followed when a subpoena, order, or other demand (hereinafter referred to as a ''demand'') of a court or other authority is issued for the production or disclosure of (1) any material contained in the files of the Department of Energy (DOE), (2) any information relating to material contained in the files of the DOE, or (3) any information or material acquired by any person while such person was an employee of the DOE as a part of the performance of his official duties or because of his official status.

(b) For purposes of this subpart, the term ''Employee of the DOE'' includes all officers and employees of the United States appointed by, or subject to the supervision, jurisdiction, or control of, the Administrator of DOE.

§ 202.22 Production or disclosure prohibited unless approved by appropriate DOE official.

No employee or former employee of the DOE shall, in response to a demand of a court or other authority, produce any material contained in the file of the DOE or disclose any information relating to material contained in the files of the DOE, or disclose any information or produce any material acquired as part of the performance of his official duties or because of his official status without prior approval of the General Counsel of DOE.

§ 202.23 Procedure in the event of a demand for production or disclosure.

(a) Whenever a demand is made upon an employee or former employee of the DOE for the production of material or the disclosure of information described in § 202.21(a), he shall immediately notify the Regional Counsel for the region where the issuing authority is located. The Regional Counsel shall immediately request instructions from the General Counsel of DOE.

(b) If oral testimony is sought by the demand, an affidavit, or, if that is not feasible, a statement by the party seeking the testimony or his attorney, setting forth a summary of the testimony desired, must be furnished for submission by the Regional Counsel to the General Counsel.

§ 202.24 Final action by the appropriate DOE official.

If the General Counsel approves a demand for the production of material or disclosure of information, he shall so notify the Regional Counsel and such other persons as circumstances may warrant.

§ 202.25 Procedure where a decision concerning a demand is not made prior to the time a response to the demand is required.

If response to the demand is required before the instructions from the General Counsel are received, a U.S. attorney or DOE attorney designated for the purpose shall appear with the employee or former employee of the DOE upon whom the demand has been made, and shall furnish the court or other authority with a copy of the regulations contained in this subpart and inform the court or other authority that the demand has been, or is being, as the case may be, referred for the prompt consideration of the appropriate DOE official and shall respectfully request the court or authority to stay the demand pending receipt of the requested instructions.

§ 202.26 Procedure in the event of an adverse ruling.

If the court or other authority declines to stay the effect of the demand in response to a request made in accordance with § 202.25 pending receipt of instructions, of if the court or other authority rules that the demand must be complied with irrespective of instructions not to produce the material or disclose the information sought, the employee or former employee upon whom the demand has been made shall respectfully decline to comply with the demand. ''United States ex rel Touhy v. Ragen,'' 340 U.S. 462.

PART 205—ADMINISTRATIVE PROCEDURES AND SANCTIONS

Subpart A—General Provisions

Sec.
205.1 Purpose and scope.
205.2 Definitions.
205.3 Appearance before the DOE or a State Office.
205.4 Filing of documents.
205.5 Computation of time.
205.6 Extension of time.
205.7 Service.
205.8 Subpoenas, special report orders, oaths, witnesses.
205.9 General filing requirements.
205.10 Effective date of orders.
205.11 Order of precedence.
205.12 Addresses for filing documents with the DOE.
205.13 Where to file.
205.14 Ratification of prior directives, orders, and actions.
205.15 Public docket room.

Subparts B–E [Reserved]

Subpart F—Interpretation

205.80 Purpose and scope.
205.81 What to file.
205.82 Where to file.
205.83 Contents.
205.84 DOE evaluation.
205.85 Decision and effect.
205.86 Appeal.

Subparts G–J [Reserved]

Subpart K—Rulings

205.150 Purpose and scope.
205.151 Criteria for issuance.
205.152 Modification or rescission.
205.153 Comments.
205.154 Appeal.

Subpart L [Reserved]

Subpart M—Conferences, Hearings, and Public Hearings

205.170 Purpose and scope.
205.171 Conferences.
205.172 Hearings.
205.173 Public hearings.

Subpart N [Reserved]

Subpart O—Notice of Probable Violation, Remedial Order, Notice of Proposed Disallowance, and Order of Disallowance

205.190 Purpose and scope.
205.191 [Reserved]
205.192 Proposed remedial order.
205.192A Burden of proof.
205.193 Notice of Objection.
205.193A Submission of ERA supplemental information.
205.194 Participants; official service list.
205.195 Filing and service of all submissions.
205.196 Statement of objections.
205.197 Response to statement of objections; reply.
205.198 Discovery.
205.198A Protective order.
205.199 Evidentiary hearing.
205.199A Hearing for the purpose of oral argument only.
205.199B Remedial order.
205.199C Appeals of remedial order to FERC.
205.199D–205.199E [Reserved]
205.199F Ex parte communications.
205.199G Extension of time; Interim and Ancillary Orders.
205.199H Actions not subject to administrative appeal.

205.199I Remedies.
205.199J Consent order.

Subparts P–T [Reserved]

Subpart U—Procedures for Electricity Export Cases

205.260 Purpose and scope.
205.261–205.269 [Reserved]
205.270 Off-the-record communications.

Subpart V—Special Procedures for Distribution of Refunds

205.280 Purpose and scope.
205.281 Petition for implementation of special refund procedures.
205.282 Evaluation of petition by the Office of Hearings and Appeals.
205.283 Applications for refund.
205.284 Processing of applications.
205.285 Effect of failure to file a timely application.
205.286 Limitations on amount of refunds.
205.287 Escrow accounts, segregated funds and other guarantees.
205.288 Interim and ancillary orders.

Subpart W—Electric Power System Permits and Reports; Applications; Administrative Procedures and Sanctions

APPLICATION FOR AUTHORIZATION TO TRANSMIT ELECTRIC ENERGY TO A FOREIGN COUNTRY

205.300 Who shall apply.
205.301 Time of filing.
205.302 Contents of application.
205.303 Required exhibits.
205.304 Other information.
205.305 Transferability.
205.306 Authorization not exclusive.
205.307 Form and style; number of copies.
205.308 Filing schedule and annual reports.
205.309 Filing procedures and fees.

APPLICATION FOR PRESIDENTIAL PERMIT AUTHORIZING THE CONSTRUCTION, CONNECTION, OPERATION, AND MAINTENANCE OF FACILITIES FOR TRANSMISSION OF ELECTRIC ENERGY AT INTERNATIONAL BOUNDARIES

205.320 Who shall apply.
205.321 Time of filing.
205.322 Contents of application.
205.323 Transferability.
205.324 Form and style; number of copies.
205.325 Annual report.
205.326 Filing procedures and fees.
205.327 Other information.
205.328 Environmental requirements for Presidential Permits—Alternative 1.
205.329 Environmental requirements for Presidential Permits—Alternative 2.

REPORT OF MAJOR ELECTRIC UTILITY SYSTEM EMERGENCIES

205.350 General purpose.
205.351 Reporting requirements.
205.352 Information to be reported.
205.353 Special investigation and reports.

EMERGENCY INTERCONNECTION OF ELECTRIC FACILITIES AND THE TRANSFER OF ELECTRICITY TO ALLEVIATE AN EMERGENCY SHORTAGE OF ELECTRIC POWER

205.370 Applicability.
205.371 Definition of emergency.
205.372 Filing procedures; number of copies.
205.373 Application procedures.
205.374 Responses from ''entities'' designated in the application.
205.375 Guidelines defining inadequate fuel or energy supply.
205.376 Rates and charges.
205.377 Reports.
205.378 Disconnection of temporary facilities.
205.379 Application for approval of the installation of permanent facilities for emergency use only.

AUTHORITY: Emergency Petroleum Allocation Act of 1973, Pub. L. 93–159; Federal Energy Administration Act of 1974, Pub. L. 93–275 (88 Stat. 96; E.O. 11790, 39 FR 23185); 42 U.S.C. 7101 *et seq.*, unless otherwise noted.

SOURCE: 39 FR 35489, Oct. 1, 1974, unless otherwise noted.

Subpart A—General Provisions

§ 205.1 Purpose and scope.

This part establishes the procedures to be utilized and identifies the sanctions that are available in proceedings before the Department of Energy and State Offices, in accordance with parts 209 through 214 of this chapter. Any exception, exemption, appeal, stay, modification, recession, redress or resolution of private grievance sought under the authority of 42 U.S.C. 7194 shall be governed by the procedural rules set forth in 10 CFR part 1003.

[61 FR 35114, July 5, 1996]

§ 205.2 Definitions.

The definitions set forth in other parts of this chapter shall apply to this part, unless otherwise provided. In addition, as used in this part, the term:

Action means an order, interpretation, notice of probable violation or ruling issued, or a rulemaking undertaken by the DOE or, as appropriate, by a State Office.

Adjustment means a modification of the base period volume or other measure of allocation entitlement in accordance with part 211 of this chapter.

Aggrieved, for purposes of administrative proceedings, describes and means a person with an interest sought to be protected under the FEAA, EPAA, or Proclamation No. 3279, as amended, who is adversely affected by an order or interpretation issued by the DOE or a State Office.

Appropriate Regional Office or appropriate State Office means the office located in the State or DOE region in which the product will be physically delivered.

Assignment means an action designating that an authorized purchaser be supplied at a specified entitlement level by a specified supplier.

Conference means an informal meeting, incident to any proceeding, between DOE or State officials and any person aggrieved by that proceeding.

Consent order means a document of agreement between DOE and a person prohibiting certain acts, requiring the performance of specific acts or including any acts which DOE could prohibit or require pursuant to § 205.195.

Duly authorized representative means a person who has been designated to appear before the DOE or a State Office in connection with a proceeding on behalf of a person interested in or aggrieved by that proceeding. Such appearance may consist of the submission of applications, petitions, requests, statements, memoranda of law, other documents, or of a personal appearance, verbal communication, or any other participation in the proceeding.

EPAA means the Emergency Petroleum Allocation Act of 1973 (Pub. L. 93–159).

EPCA means the Energy Policy and Conservation Act (Pub. L. 94–163).

Exception means the waiver or modification of the requirements of a regulation, ruling or generally applicable requirement under a specific set of facts.

Exemption means the release from the obligation to comply with any part or parts, or any subpart thereof, of this chapter.

DOE means the Department of Energy, created by the FEAA and includes the DOE National Office and Regional Offices.

FEAA means the Federal Energy Administration Act of 1974 (Pub. L. 93–275).

Federal legal holiday means New Year's Day, Washington's Birthday, Memorial Day, Independence Day, Labor Day, Columbus Day, Veterans' Day, Thanksgiving Day, Christmas Day, and any other day appointed as a national holiday by the President or the Congress of the United States.

Interpretation means a written statement issued by the General Counsel or his delegate or Regional Counsel, in response to a written request, that applies the regulations, rulings, and other precedents previously issued, to the particular facts of a prospective or completed act or transaction.

Notice of probable violation means a written statement issued to a person by the DOE that states one or more alleged violations of the provisions of this chapter or any order issued pursuant thereto.

Order means a written directive or verbal communication of a written directive, if promptly confirmed in writing, issued by the DOE or a State Office. It may be issued in response to an application, petition or request for DOE action or in response to an appeal from an order, or it may be a remedial order or other directive issued by the DOE or a State Office on its own initiative. A notice of probable violation is not an order. For purposes of this definition a ''written directive'' shall include telegrams, telecopies and similar transcriptions.

Person means any individual, firm, estate, trust, sole proprietorship, partnership, association, company, joint-venture, corporation, governmental unit or instrumentality thereof, or a charitable, educational or other institution, and includes any officer, director, owner or duly authorized representative thereof.

Proceeding means the process and activity, and any part thereof, instituted by the DOE or a State Office, either on its own initiative or in response to an application, complaint, petition or request submitted by a person, that may lead to an action by the DOE or a State Office.

Remedial order means a directive issued by the DOE requiring a person to cease a violation or to eliminate or to compensate for the effects of a violation, or both.

Ruling means an official interpretative statement of general applicability issued by the DOE General Counsel and published in the FEDERAL REGISTER that applies the DOE regulations to a specific set of circumstances.

State Office means a State Office of Petroleum Allocation certified by the DOE upon application pursuant to part 211 of this chapter.

Throughout this part the use of a word or term in the singular shall include the plural and the use of the male gender shall include the female gender.

(Emergency Petroleum Allocation Act of 1973, Pub. L. 93–159, as amended, Pub. L. 93–511, Pub. L. 94–99, Pub. L. 94–133, Pub. L. 94–163, and Pub. L. 94–385; Federal Energy Administration Act of 1974, Pub. L. 93–275, as amended, Pub. L. 94–385; Energy Policy and Conservation Act, Pub. L. 94–163, as amended, Pub. L. 94–385; E.O. 11790, 39 FR 23185; Department of Energy Organization Act, Pub. L. 95–91; E.O. 12009, 42 FR 46267)

[39 FR 35489, Oct. 1, 1974, as amended at 40 FR 36555, Aug. 21, 1975; 40 FR 36761, Aug. 22, 1975; 41 FR 36647, Aug. 31, 1976; 43 FR 14437, Apr. 6, 1978]

§ 205.3 Appearance before the DOE or a State Office.

(a) A person may make an appearance, including personal appearances in the discretion of the DOE, and participate in any proceeding described in this part on his own behalf or by a duly authorized representative. Any application, appeal, petition, request or complaint filed by a duly authorized representative shall contain a statement by such person certifying that he is a duly authorized representative, unless a DOE form requires otherwise. Falsification of such certification will subject such person to the sanctions stated in 18 U.S.C. 1001 (1970).

(b) Suspension and disqualification: The DOE or a State Office may deny, temporarily or permanently, the privilege of participating in proceedings, including oral presentation, to any individual who is found by the DOE—

(1) To have made false or misleading statements, either verbally or in writing;

(2) To have filed false or materially altered documents, affidavits or other writings;

(3) To lack the specific authority to represent the person seeking a DOE or State Office action; or

(4) To have engaged in or to be engaged in contumacious conduct that substantially disrupts a proceeding.

§ 205.4 Filing of documents.

(a) Any document, including, but not limited to, an application, request, complaint, petition and other documents submitted in connection therewith, filed with the DOE or a State Office under this chapter is considered to be filed when it has been received by the DOE National Office, a Regional Office or a State Office. Documents transmitted to the DOE must be addressed as required by § 205.12. All documents and exhibits submitted become part of an DOE or a State Office file and will not be returned.

(b) Notwithstanding the provisions of paragraph (a) of this section, an appeal, a response to a denial of an appeal or application for modification or recision in accordance with §§ 205.106(a)(3) and 205.135(a)(3), respectively, a reply to a notice of probable violation, the appeal of a remedial order or remedial order for immediate compliance, a response to denial of a claim of confidentiality, or a comment submitted in connection with any proceeding transmitted by registered or certified mail and addressed to the appropriate office is considered to be filed upon mailing.

(c) Hand-delivered documents to be filed with the Office of Exceptions and Appeals shall be submitted to Room 8002 at 2000 M Street, NW., Washington, D.C. All other hand-delivered documents to be filed with the DOE National Office shall be submitted to the Executive Secretariat at 12th and Pennsylvania Avenue, NW., Washington, D.C. Hand-delivered documents to be filed with a Regional Office shall be submitted to the Office of the Regional Administrator. Hand-delivered documents to be filed with a State Office shall be submitted to the office of

the chief executive officer of such office.

(d) Documents received after regular business hours are deemed filed on the next regular business day. Regular business hours for the DOE National Office are 8 a.m. to 4:30 p.m. Regular business hours for a Regional Office or a State Office shall be established independently by each.

§ 205.5 Computation of time.

(a) *Days.* (1) Except as provided in paragraph (b) of this section, in computing any period of time prescribed or allowed by these regulations or by an order of the DOE or a State Office, the day of the act, event, or default from which the designated period of time begins to run is not to be included. The last day of the period so computed is to be included unless it is a Saturday, Sunday, or Federal legal holiday in which event the period runs until the end of the next day that is neither a Saturday, Sunday, nor a Federal legal holiday.

(2) Saturdays, Sundays or intervening Federal legal holidays shall be excluded from the computation of time when the period of time allowed or prescribed is 7 days or less.

(b) *Hours.* If the period of time prescribed in an order issued by the DOE or a State Office is stated in hours rather than days, the period of time shall begin to run upon actual notice of such order, whether by verbal or written communication, to the person directly affected, and shall run without interruption, unless otherwise provided in the order, or unless the order is stayed, modified, suspended or rescinded. When a written order is transmitted by verbal communication, the written order shall be served as soon thereafter as is feasible.

(c) *Additional time after service by mail.* Whenever a person is required to perform an act, to cease and desist therefrom, or to initiate a proceeding under this part within a prescribed period of time after issuance to such person of an order, notice, interpretation or other document and the order, notice, interpretation or other document is served by mail, 3 days shall be added to the prescribed period.

§ 205.6 Extension of time.

When a document is required to be filed within a prescribed time, an extension of time to file may be granted by the office with which the document is required to be filed upon good cause shown.

§ 205.7 Service.

(a) All orders, notices, interpretations or other documents required to be served under this part shall be served personally or by registered or certified mail or by regular United States mail (only when service is effected by the DOE or a State Office), except as otherwise provided.

(b) Service upon a person's duly authorized representative shall constitute service upon that person.

(c) Service by registered or certified mail is complete upon mailing. Official United States Postal Service receipts from such registered or certified mailing shall constitute *prima facie* evidence of service.

§ 205.8 Subpoenas, special report orders, oaths, witnesses.

(a) In this section the following terms have the definitions indicated unless otherwise provided.

(1) ''DOE Official'' means the Secretary of the Department of Energy, the Administrator of the Economic Regulatory Administration, the Administrator of Energy Information Administration, the General Counsel of the Department of Energy, the Special Counsel for Compliance, the Assistant Administrator for Enforcement, the Director of the Office of Hearings and Appeals, or the duly authorized delegate of any of the foregoing officials.

(2) ''SRO'' means a Special Report Order issued pursuant to paragraph (b) of this section.

(b) (1) In accordance with the provisions of this section and as otherwise authorized by law, a DOE Official may sign, issue and serve subpoenas; administer oaths and affirmations; take sworn testimony; compel attendance of and sequester witnesses; control dissemination of any record of testimony taken pursuant to this section; subpoena and reproduce books, papers, correspondence, memoranda, contracts agreements, or other relevant records

or tangible evidence including, but not limited to, information retained in computerized or other automated systems in possession of the subpoenaed person. Unless otherwise provided by subpart O, the provisions of this section apply to subpoenas issued by the office of Hearings and Appeals with respect to matters in proceedings before it.

(2) A DOE Official may issue a Special Report Order requiring any person subject to the jurisdiction of the ERA to file a special report providing information relating to DOE regulations, including but not limited to written answers to specific questions. The SRO may be in addition to any other reports required by this chapter.

(3) The DOE Official who issues a subpoena or SRO pursuant to this section, for good cause shown, may extend the time prescribed for compliance with the subpoena or SRO and negotiate and approve the terms of satisfactory compliance.

(4) Prior to the time specified for compliance, but in no event more than 10 days after the date of service of the subpoena or SRO, the person upon whom the document was served may file a request for review of the subpoena or SRO with the DOE Official who issued the document. The DOE Official then shall forward the request to his supervisor who shall provide notice of receipt to the person requesting review. The supervisor or his designee may extend the time prescribed for compliance with the subpoena or SRO and negotiate and approve the terms of satisfactory compliance.

(5) If the subpoena or SRO is not modified or rescinded within 10 days of the date of the supervisor's notice of receipt, (i) the subpoena or SRO shall be effective as issued; and (ii) the person upon whom the document was served shall comply with the subpoena or SRO within 20 days of the date of the supervisor's notice of receipt, unless otherwise notified in writing by the supervisor or his designee.

(6) There is no administrative appeal of a subpoena or SRO.

(c) (1) A subpoena or SRO shall be served upon a person named in the document by delivering a copy of the document to the person named.

(2) Delivery of a copy of the document to a natural person may be made by:

(i) Handing it to the person;

(ii) Leaving it at the person's office with the person in charge of the office;

(iii) Leaving it at the person's dwelling or usual place of abode with a person of suitable age and discretion who resides there;

(iv) Mailing it to the person by registered or certified mail, at his last known address; or

(v) Any method that provides the person with actual notice prior to the return date of the document.

(3) Delivery of a copy of the document to a person who is not a natural person may be made by:

(i) Handing it to a registered agent of the person;

(ii) Handing it to any officer, director, or agent in charge of any office of such person;

(iii) Mailing it to the last known address of any registered agent, officer, director, or agent in charge of any office of the person by registered or certified mail, or

(iv) Any method that provides any registered agent, officer, director, or agent in charge of any office of the person with actual notice of the document prior to the return date of the document.

(d)(1) A witness subpoenaed by the DOE shall be paid the same fees and mileage as paid to a witness in the district courts of the United States.

(2) If in the course of a proceeding conducted pursuant to subpart M or O, a subpoena is issued at the request of a person other than an officer or agency of the United States, the witness fees and mileage shall be paid by the person who requested the subpoena. However, at the request of the person, the witness fees and mileage shall be paid by the DOE if the person shows:

(i) The presence of the subpoenaed witness will materially advance the proceeding; and

(ii) The person who requested that the subpoena be issued would suffer a serious hardship if required to pay the witness fees and mileage. The DOE Official issuing the subpoena shall make the determination required by this subsection.

(e) If any person upon whom a subpoena or SRO is served pursuant to this section, refuses or fails to comply with any provision of the subpoena or SRO, an action may be commenced in the United States District Court to enforce the subpoena or SRO.

(f) (1) Documents produced in response to a subpoena shall be accompanied by the sworn certification, under penalty of perjury, of the person to whom the subpoena was directed or his authorized agent that (i) a diligent search has been made for each document responsive to the subpoena, and (ii) to the best of his knowledge, information, and belief each document responsive to the subpoena is being produced unless withheld on the grounds of privilege pursuant to paragraph (g) of this section.

(2) Any information furnished in response to an SRO shall be accompanied by the sworn certification under penalty of perjury of the person to whom it was directed or his authorized agent who actually provides the information that (i) a diligent effort has been made to provide all information required by the SRO, and (ii) all information furnished is true, complete, and correct unless withheld on grounds of privilege pursuant to paragraph (g) of this section.

(3) If any document responsive to a subpoena is not produced or any information required by an SRO is not furnished, the certification shall include a statement setting forth every reason for failing to comply with the subpoena or SRO.

(g) If a person to whom a subpoena or SRO is directed withholds any document or information because of a claim of attorney-client or other privilege, the person submitting the certification required by paragraph (f) of this section also shall submit a written list of the documents or the information withheld indicating a description of each document or information, the date of the document, each person shown on the document as having received a copy of the document, each person shown on the document as having prepared or been sent the document, the privilege relied upon as the basis for withholding the document or information, and an identification of the person whose privilege is being asserted.

(h)(1) If testimony is taken pursuant to a subpoena, the DOE Official shall determine whether the testimony shall be recorded and the means by which the testimony is recorded.

(2) A witness whose testimony is recorded may procure a copy of his testimony by making a written request for a copy and paying the appropriate fees. However, the DOE official may deny the request for good cause. Upon proper identification, any witness or his attorney has the right to inspect the official transcript of the witness' own testimony.

(i) The DOE Official may sequester any person subpoenaed to furnish documents or give testimony. Unless permitted by the DOE Official, neither a witness nor his attorney shall be present during the examination of any other witnesses.

(j)(1) Any witness whose testimony is taken may be accompanied, represented and advised by his attorney as follows:

(i) Upon the initiative of the attorney or witness, the attorney may advise his client, in confidence, with respect to the question asked his client, and if the witness refuses to answer any question, the witness or his attorney is required to briefly state the legal grounds for such refusal; and

(ii) If the witness claims a privilege to refuse to answer a question on the grounds of self-incrimination, the witness must assert the privilege personally.

(k) The DOE Official shall take all necessary action to regulate the course of testimony and to avoid delay and prevent or restrain contemptuous or obstructionist conduct or contemptuous language. DOE may take actions as the circumstances may warrant in

regard to any instances where any attorney refuses to comply with directions or provisions of this section.

(Emergency Petroleum Allocation Act of 1973, Pub. L. 93–159, as amended, Pub. L. 94–163, and Pub. L. 94–385; Federal Energy Administration Act of 1974, Pub. L. 93–275, as amended, Pub. L. 94–332, Pub. L. 94–385, Pub. L. 95–70, and Pub. L. 95–91; Energy Supply and Environmental Coordination Act of 1974, Pub. L. 93–319, as amended; Energy Policy and Conservation Act, Pub. L. 94–163, as amended, Pub. L. 94–385, and Pub. L. 95–70; Department of Energy Organization Act, Pub. L. 95–91; E.O. 11790, 39 FR 23185; E.O. 12009, 42 FR 46267)

[44 FR 23201, Apr. 19, 1979]

§ 205.9 General filing requirements.

(a) *Purpose and scope.* The provisions of this section shall apply to all documents required or permitted to be filed with the DOE or with a State Office.

(b) *Signing.* All applications, petitions, requests, appeals, comments or any other documents that are required to be signed, shall be signed by the person filing the document or a duly authorized representative. Any application, appeal, petition, request, complaint or other document filed by a duly authorized representative shall contain a statement by such person certifying that he is a duly authorized representative, unless an DOE form other wise requires. (A false certification is unlawful under the provisions of 18 U.S.C. 1001 (1970)).

(c) *Labeling.* An application, petition, or other request for action by the DOE or a State Office should be clearly labeled according to the nature of the action involved (*e.g.*, ''Application for Assignment'') both on the document and on the outside of the envelope in which the document is transmitted.

(d) *Obligation to supply information.* A person who files an application, petition, complaint, appeal or other request for action is under a continuing obligation during the proceeding to provide the DOE or a State Office with any new or newly discovered information that is relevant to that proceeding. Such information includes, but is not limited to, information regarding any other application, petition, complaint, appeal or request for action that is subsequently filed by that person with any DOE office or State Office.

(e) *The same or related matters.* A person who files an application, petition, complaint, appeal or other request for action by the DOE or a State Office shall state whether, to the best knowledge of that person, the same or related issue, act or transaction has been or presently is being considered or investigated by any DOE office, other Federal agency, department or instrumentality; or by a State Office, a state or municipal agency or court; or by any law enforcement agency; including, but not limited to, a consideration or investigation in connection with any proceeding described in this part. In addition, the person shall state whether contact has been made by the person or one acting on his behalf with any person who is employed by the DOE or any State Office with regard to the same issue, act or transaction or a related issue, act or transaction arising out of the same factual situation; the name of the person contacted; whether the contact was verbal or in writing; the nature and substance of the contact; and the date or dates of the contact.

(f) *Request for confidential treatment.* (1) If any person filing a document with the DOE or a State Office claims that some or all the information contained in the document is exempt from the mandatory public disclosure requirements of the Freedom of Information Act (5 U.S.C. 552 (1970)), is information referred to in 18 U.S.C. 1905 (1970), or is otherwise exempt by law from public disclosure, and if such person requests the DOE or a State Office not to disclose such information, such person shall file together with the document a second copy of the document from which has been deleted the information for which such person wishes to claim confidential treatment. The person shall indicate in the original document that it is confidential or contains confidential information and may file a statement specifying the justification for non-disclosure of the information for which confidential treatment is claimed. If the person states that the

information comes within the exception in 5 U.S.C. 552(b)(4) for trade secrets and commercial or financial information, such person shall include a statement specifying why such information is privileged or confidential. If the person filing a document does not submit a second copy of the document with the confidential information deleted, the DOE or a State Office may assume that there is no objection to public disclosure of the document in its entirety.

(2) The DOE or a State Office retains the right to make its own determination with regard to any claim of confidentiality. Notice of the decision by the DOE or a State Office to deny such claim, in whole or in part, and an opportunity to respond shall be given to a person claiming confidentiality of information no less than five days prior to its public disclosure.

(g) *Separate applications, petitions or requests.* Each application, petition or request for DOE action shall be submitted as a separate document, even if the applications, petitions, or requests deal with the same or a related issue, act or transaction, or are submitted in connection with the same proceeding.

§ 205.10 Effective date of orders.

Any order issued by the DOE or a State Office under this chapter is effective as against all persons having actual notice thereof upon issuance, in accordance with its terms, unless and until it is stayed, modified, suspended, or rescinded. An order is deemed to be issued on the date, as specified in the order, on which it is signed by an authorized representative of the DOE or a State Office, unless the order provides otherwise.

§ 205.11 Order of precedence.

(a) If there is any conflict or inconsistency between the provisions of this part and any other provision of this chapter, the provisions of this part shall control with respect to procedure.

(b) Notwithstanding paragraph (a) of this section, subpart I of part 212 of this chapter shall control with respect to prenotification and reporting and subpart J of part 212 of this chapter shall control with respect to accounting and financial reporting requirements.

§ 205.12 Addresses for filing documents with the DOE.

(a) All applications, requests, petitions, appeals, reports, DOE or FEO forms, written communications and other documents to be submitted to or filed with the DOE National Office in accordance with this chapter shall be addressed as provided in this section. The DOE National Office has facilities for the receipt of transmissions via TWX and FAX. The FAX is a 3M full duplex 4 or 6 minute (automatic) machine.

FAX Numbers	TWX Numbers
(202) 254–6175	(701) 822–9454
(202) 254–6461	(701) 822–9459

(1) Documents for which a specific address and/or code number is not provided in accordance with paragraphs (a)(2) through (7) of this section, shall be addressed as follows: Department of Energy, Attn: (name of person to receive document, if known, or subject), Washington, DC 20461.

(2) Documents to be filed with the Office of Exceptions and Appeals, as provided in this part or otherwise, shall be addressed as follows. Office of Exceptions and Appeals, Department of Energy, Attn: (name of person to receive document, if known, and/or labeling as specified in § 205.9(c)), Washington, DC 20461.

(3) Documents to be filed with the Office of General Counsel, as provided in this part or otherwise, shall be addressed as follows: Office of the General Counsel, U.S. Department of Energy, Attn: (name of person to receive document, if known, and labeling as specified in § 205.9(c)), 1000 Independence Avenue, Washington, DC 20585.

(4) Documents to be filed with the Office of Private Grievances and Redress, as provided in this part or otherwise, shall be addressed as follows: Office of Private Grievances and Redress, Department of Energy, Attn: (name of person to receive document, if known and/or labeling as specified in § 205.9(c)), Washington, DC 20461.

(5) All other documents filed, except those concerning price (see paragraph

(a)(6) of this section), those designated as DOE or FEO forms (see paragraph (a)(7) of this section), and ''Surplus Product Reports'' (see paragraph (a)(8) of this section), but including those pertaining to compliance and allocation (adjustment and assignment) of allocated products, are to be identified by one of the code numbers stated below and addressed as follows: Department of Energy, Code____, labeling as specified in § 205.9(c), Washington, DC 20461.

CODE NUMBERS

	Code
Product:	
Crude oil	10
Naphtha and gas oil	15
Propane, butane and natural gasoline	25
Other products	30
Bunker fuel	40
Residual fuel (nonutility)	50
Motor gasoline	60
Middle distillates	70
Aviation fuels	80
Submissions by specific entities:	
Electric utilities	45
Department of Defense	55

(6) Documents pertaining to the price of covered products, except those to be submitted to other offices as provided in this part, shall be addressed to the Department of Energy, Code 1000, Attn: (name of person to receive document, if known, and/or labeling as specified in § 205.9(c)), Washington, DC 20461.

(7) Documents designated as DOE or FEO forms shall be submitted in accordance with the instructions stated in the form.

(8) ''Surplus Product Reports'' shall be submitted to the Department of Energy, Post Office Box 19407, Washington, DC 20036.

(9) Documents to be filed with the Director of Oil Imports, as provided in this part or otherwise, shall be addressed as follows: Director of Oil Imports, Department of Energy, P.O. Box 7414, Washington, DC 20044.

(10) Petitions for rulemaking to be filed with the Economic Regulatory Administration National Office shall be addressed as follows: Economic Regulatory Administration, Attn: Assistant Administrator for Regulations and Emergency Planning (labeled as ''Petition for Rulemaking,'') 2000 M Street, N.W., Washington, DC 20461.

(b) All reports, applications, requests, notices, complaints, written communications and other documents to be submitted to or filed with an DOE Regional Office in accordance with this chapter shall be directed to one of the following addresses, as appropriate:

REGION 1

Connecticut, Maine, Massachusetts, New Hampshire, Rhode Island, Vermont; Regional Office, Department of Energy, 150 Causeway Street, Boston, Massachusetts 02114.

REGION 2

New Jersey, New York, Puerto Rico, Virgin Islands; Regional Office, Department of Energy, 26 Federal Plaza, New York, New York 10007.

REGION 3

Delaware, District of Columbia, Maryland, Pennsylvania, Virginia, West Virginia; Regional Office, Department of Energy, Federal Office Building, 1421 Cherry Street, Philadelphia, Pennsylvania 19102.

REGION 4

Alabama, Canal Zone, Florida, Georgia, Kentucky, Mississippi, North Carolina, South Carolina; Regional Office, Department of Energy, 1655 Peachtree Street NW., Atlanta, Georgia 30309.

REGION 5

Illinois, Indiana, Michigan, Minnesota, Ohio, Wisconsin; Regional Office, Department of Energy, 175 West Jackson Street, Chicago, Illinois 60604.

REGION 6

Arkansas, Louisiana, New Mexico, Oklahoma, Texas; Regional Office, Department of Energy, 212 North Saint Paul Street, Dallas, Texas 75201.

REGION 7

Iowa, Kansas, Missouri, Nebraska; Regional Office, Department of Energy, Federal Office Building, P.O. Box 15000, 112 East 12th Street, Kansas City, Missouri 64106.

REGION 8

Colorado, Montana, North Dakota, South Dakota, Utah, Wyoming; Regional Office, Department of Energy, Post Office Box 26247, Belmar Branch, Denver, Colorado 80226.

REGION 9

American Samoa, Arizona, California, Guam, Hawaii, Nevada, Trust Territory of the Pacific Islands; Regional Office, Department

of Energy, 111 Pine Street, San Francisco, California 94111.

REGION 10

Alaska, Idaho, Oregon, Washington; Regional Office, Department of Energy, Federal Office Building, 909 First Avenue, Room 3098, Seattle, Washington 98104.

(Emergency Petroleum Allocation Act of 1973, 15 U.S.C. 751 *et seq.*, Pub. L. 93–159, as amended, Pub. L. 93–511, Pub. L. 94–99, Pub. L. 94–133, Pub. L. 94–163, and Pub. L. 94–385; Federal Energy Administration Act of 1974, 15 U.S.C. 787 *et seq.*, Pub. L. 93–275, as amended, Pub. L. 94–332, Pub. L. 94–385, Pub. L. 95–70, and Pub. L. 95–91; Energy Policy and Conservation Act, 42 U.S.C. 6201 *et seq.*, Pub. L. 94–163, as amended, Pub. L. 94–385, and Pub. L. 95–70; Department of Energy Organization Act, 42 U.S.C. 7101 *et seq.*, Pub. L. 95–91; E.O. 11790, 39 FR 23185; E.O. 12009, 42 FR 46267)

[39 FR 35489, Oct. 1, 1974, as amended at 40 FR 36555, Aug. 21, 1975; 45 FR 37684, June 4, 1980]

§ 205.13 Where to file.

(a) Except as otherwise specifically provided in other subparts of this part, all documents to be filed with the ERA pursuant to this part shall be filed with the appropriate ERA Regional Office (unless otherwise specified in part 211 of this chapter), except that all documents shall be filed with the ERA National Office that relate to:

(1) The allocation and pricing of crude oil pursuant to subpart C of part 211 and part 212 of this chapter;

(2) Refinery yield controls pursuant to subpart C of part 211 of this chapter;

(3) The pricing of propane, butane and natural gasoline pursuant to part 212 of this chapter and the allocation of butane and natural gasoline pursuant to part 211 of this chapter;

(4) The allocation and pricing of middle distillate fuels pursuant to subpart G of part 211 and part 212 of this chapter, filed by electric utilities;

(5) The allocation and pricing of aviation fuel pursuant to subpart H of part 211 and part 212 of this chapter, filed by civil air carriers (except air taxi/commercial operators);

(6) The allocation and pricing of residual fuel oil pursuant to subpart I of part 211 and part 212 of this chapter, filed by electric utilities;

(7) The allocation and pricing of naphtha and gas oil pursuant to subpart J of part 211 and part 212 of this chapter;

(8) The allocation and pricing of other products pursuant to subpart K of part 211 and part 212 of this chapter;

(9) An application for an exemption under subpart E of this part; requests for a rulemaking proceeding under subpart L of this part or for the issuance of a ruling under subpart K of this part; and petitions to the Office of Private Grievances and Redress under subpart R of this part;

(10) The pricing of products pursuant to part 212 of this chapter, filed by a refiner; and

(11) The allocation of crude oil and other allocated products to meet Department of Defense needs pursuant to part 211 of this chapter.

(12) The allocation of crude oil and other allocated products to be utilized as feedstock in a synthetic natural gas plant, pursuant to § 211.29.

(13) Allocations, fee-paid and fee-exempt licenses issued pursuant to part 213 of this chapter.

(b) Applications by end-users and wholesale purchasers for an allocation under the state set-aside system in accordance with § 211.17 shall be filed with the appropriate State Office.

(c) Applications to a State Office or a DOE Regional Office shall be directed to the office located in the state or region in which the allocated product will be physically delivered. An applicant doing business in more than one state or region must apply separately to each State or region in which a product will be physically delivered, unless the State Offices or Regional Offices involved agree otherwise.

[39 FR 35489, Oct. 1, 1974, as amended at 39 FR 36571, Oct. 11, 1974; 39 FR 39022, Nov. 5, 1974; 40 FR 28446, July 7, 1975; 40 FR 36555, Aug. 21, 1975; 44 FR 60648, Oct. 19, 1979]

§ 205.14 Ratification of prior directives, orders, and actions.

All interpretations, orders, notices of probable violation or other directives issued, all proceedings initiated, and all other actions taken in accordance with part 205 as it existed prior to the effective date of this amendment, are hereby confirmed and ratified, and shall remain in full force and effect as if issued under this amended part 205, unless or until they are altered,

amended, modified or rescinded in accordance with the provisions of this part.

§ 205.15 Public docket room.

There shall be established at the DOE National Office, 12th and Pennsylvania Avenue, NW., Washington, DC, a public docket room in which shall be made available for public inspection and copying:

(a) A list of all persons who have applied for an exception, an exemption, or an appeal, and a digest of each application;

(b) Each decision and statement setting forth the relevant facts and legal basis of an order, with confidential information deleted, issued in response to an application for an exception or exemption or at the conclusion of an appeal;

(c) The comments received during each rulemaking proceeding, with a verbatim transcript of the public hearing if such a public hearing was held; and

(d) Any other information required by statute to be made available for public inspection and copying, and any information that the DOE determines should be made available to the public.

Subparts B–E [Reserved]

Subpart F—Interpretation

§ 205.80 Purpose and scope.

(a) This subpart establishes the procedures for the filing of a formal request for an interpretation and for the consideration of such request. Responses, which may include verbal or written responses to general inquiries or to other than formal written requests for interpretation filed with the General Counsel or his delegate or a Regional Counsel, are not interpretations and merely provide general information.

(b) A request for interpretation that includes, or could be construed to include an application for an exception or an exemption may be treated solely as a request for interpretation and processed as such.

(Emergency Petroleum Allocation Act of 1973, Pub. L. 93–159, as amended, Pub. L. 93–511, Pub. L. 94–99, Pub. L. 94–133, Pub. L. 94–163, and Pub. L. 94–385, Federal Energy Administration Act of 1974, Pub. L. 93–275, as amended, Pub. L. 94–385, Energy Policy and Conservation Act, Pub. L. 94–163, as amended, Pub. L. 94–385; E.O. 11790, 39 FR 23185; Department of Energy Organization Act, Pub. L. 95–91; E.O. 12009, 42 FR 46267)

[39 FR 35489, Oct. 1, 1974, as amended at 43 FR 14437, Apr. 6, 1978]

§ 205.81 What to file.

(a) A person filing under this subpart shall file a ''Request for Interpretation,'' which should be clearly labeled as such both on the request and on the outside of the envelope in which the request is transmitted, and shall be in writing and signed by the person filing the request. The person filing the request shall comply with the general filing requirements stated in § 205.9 in addition to the requirements stated in this subpart.

(b) If the person filing the request wishes to claim confidential treatment for any information contained in the request or other documents submitted under this subpart, the procedures set out in § 205.9(f) shall apply.

§ 205.82 Where to file.

A request for interpretation shall be filed with the General Counsel or his delegate or with the appropriate Regional Counsel at the address provided in § 205.12.

(Emergency Petroleum Allocation Act of 1973, Pub. L. 93–159, as amended, Pub. L. 93–511, Pub. L. 94–99, Pub. L. 94–133, Pub. L. 94–163, and Pub. L. 94–385; Federal Energy Administration Act of 1974, Pub. L. 93–275, as amended, Pub. L. 94–385; Energy Policy and Conservation Act, Pub. L. 94–163, as amended, Pub. L. 94–385; E.O. 11790, 39 FR 23185; Department of Energy Organization Act, Pub. L. 95–91; E.O. 12009, 42 FR 46267)

[39 FR 35489, Oct. 1, 1974, as amended at 43 FR 14437, Apr. 6, 1978; 43 FR 17803, Apr. 26, 1978]

§ 205.83 Contents.

(a) The request shall contain a full and complete statement of all relevant facts pertaining to the circumstances, act or transaction that is the subject of the request and to the DOE action

sought. Such facts shall include the names and addresses of all affected persons (if reasonably ascertainable) and a full discussion of the pertinent provisions and relevant facts contained in the documents submitted with the request. Copies of all relevant contracts, agreements, leases, instruments, and other documents shall be submitted with the request. When the request pertains to only one step of a larger integrated transaction, the facts, circumstances, and other relevant information pertaining to the entire transaction must be submitted.

(b) The request for interpretation shall include a discussion of all relevant authorities, including, but not limited to, DOE rulings, regulations, interpretations and decisions on appeals and exceptions relied upon to support the particular interpretation sought therein.

§ 205.84 DOE evaluation.

(a) *Processing.* (1) The DOE may initiate an investigation of any statement in a request and utilize in its evaluation any relevant facts obtained by such investigation. The DOE may accept submissions from third persons relevant to any request for interpretation provided that the person making the request is afforded an opportunity to respond to all third person submissions. In evaluating a request for interpretation, the DOE may consider any other source of information. The DOE on its own initiative may convene a conference, if, in its discretion, it considers that such conference will advance its evaluation of the request.

(2) The DOE shall issue its interpretation on the basis of the information provided in the request, unless that information is supplemented by other information brought to the attention of the General Counsel or a Regional Counsel during the proceeding. The interpretation shall, therefore, depend for its authority on the accuracy of the factual statement and may be relied upon only to the extent that the facts of the actual situation correspond to those upon which the interpretation was based.

(3) If the DOE determines that there is insufficient information upon which to base a decision and if upon request additional information is not submitted by the person requesting the interpretation, the DOE may refuse to issue an interpretation.

(b) *Criteria.* (1) The DOE shall base an interpretation on the FEA and EPAA and the regulations and published rulings of the DOE as applied to the specific factual situation.

(2) The DOE shall take into consideration previously issued interpretations dealing with the same or a related issue.

§ 205.85 Decision and effect.

(a) An interpretation may be issued after consideration of the request for interpretation and other relevant information received or obtained during the proceeding.

(b) The interpretation shall contain a statement of the information upon which it is based and a legal analysis of and conclusions regarding the application of rulings, regulations and other precedent to the situation presented in the request.

(c) Only those persons to whom an interpretation is specifically addressed and other persons upon whom the DOE serves the interpretation and who are directly involved in the same transaction or act may rely upon it. No person entitled to rely upon an interpretation shall be subject to civil or criminal penalties stated in subpart P of this part for any act taken in reliance upon the interpretation, notwithstanding that the interpretation shall thereafter be declared by judicial or other competent authority to be invalid.

(d) An interpretation may be rescinded or modified at any time. Rescission or modification may be effected by notifying persons entitled to rely on the interpretation that it is rescinded or modified. This notification shall include a statement of the reasons for the recision or modification and, in the case of a modification, a restatement of the interpretation as modified.

(e) An interpretation is modified by a subsequent amendment to the regulations or ruling to the extent that it is inconsistent with the amended regulation or ruling.

(f)(1) Any person aggrieved by an interpretation may submit a petition for reconsideration to the General Counsel within 30 days of service of the interpretation from which the reconsideration is sought. There has not been an exhaustion of administrative remedies until a period of 30 days from the date of service of the interpretation has elapsed without receipt by the General Counsel of a petition for reconsideration or, if a petition for reconsideration of the interpretation has been filed in a timely manner, until that petition has been acted on by the General Counsel. However, a petition to which the General Counsel does not respond within 60 days of the date of receipt thereof, or within such extended time as the General Counsel may prescribe by written notice to the petitioner concerned within that 60 day period, shall be considered denied.

(2) A petition for reconsideration may be summarily denied if—

(i) It is not filed in a timely manner, unless good cause is shown; or

(ii) It is defective on its face for failure to state, and to present facts and legal argument in support thereof, that the interpretation was erroneous in fact or in law, or that it was arbitrary or capricious.

(3) The General Counsel may deny any petition for reconsideration if the petitioner does not establish that—

(i) The petition was filed by a person aggrieved by an interpretation;

(ii) The interpretation was erroneous in fact or in law; or

(iii) The interpretation was arbitrary or capricious. The denial of a petition shall be a final order of which the petitioner may seek judicial review.

(Emergency Petroleum Allocation Act of 1973, Pub. L. 93–159, as amended, Pub. L. 93–511, Pub. L. 94–99, Pub. L. 94–133, Pub. L. 94–163, and Pub. L. 94–385, Federal Energy Administration Act of 1974, Pub. L. 93–275, as amended, Pub. L. 94–385, Energy Policy and Conservation Act, Pub. L. 94–163, as amended, Pub. L. 94–385; E.O. 11790, 39 FR 23185; Department of Energy Organization Act, Pub. L. 95–91; E.O. 12009, 42 FR 46267)

[39 FR 35489, Oct. 1, 1974, as amended at 43 FR 14437, Apr. 6, 1978]

§ 205.86 Appeal.

There is no administrative appeal of an interpretation.

(Emergency Petroleum Allocation Act of 1973, Pub. L. 93–159, as amended, Pub. L. 93–511, Pub. L. 94–99, Pub. L. 94–133, Pub. L. 94–163, and Pub. L. 94–385, Federal Energy Administration Act of 1974, Pub. L. 93–275, as amended, Pub. L. 94–385, Energy Policy and Conservation Act, Pub. L. 94–163, as amended, Pub. L. 94–385; E.O. 11790, 39 FR 23185; Department of Energy Organization Act, Pub. L. 95–91; E.O. 12009, 42 FR 46267)

[43 FR 14437, Apr. 6, 1978]

Subparts G–J [Reserved]

Subpart K—Rulings

§ 205.150 Purpose and scope.

This subpart establishes the criteria for the issuance of interpretative rulings by the General Counsel. All rulings shall be published in the FEDERAL REGISTER. Any person is entitled to rely upon such ruling, to the extent provided in this subpart.

§ 205.151 Criteria for issuance.

(a) A ruling may be issued, in the discretion of the General Counsel, whenever there have been a substantial number of inquiries with regard to similar factual situations or a particular section of the regulations.

(b) The General Counsel may issue a ruling whenever it is determined that it will be of assistance to the public in applying the regulations to a specific situation.

§ 205.152 Modification or rescission.

(a) A ruling may be modified or rescinded by:

(1) Publication of the modification or rescission in the FEDERAL REGISTER; or

(2) A rulemaking proceeding in accordance with subpart L of this part.

(b) Unless and until a ruling is modified or rescinded as provided in paragraph (a) of this section, no person shall be subject to the sanctions or penalties stated in subpart P of this part for actions taken in reliance upon the ruling, notwithstanding that the ruling shall thereafter be declared by judicial or other competent authority to be invalid. Upon such declaration,

no person shall be entitled to rely upon the ruling.

§ 205.153 Comments.

A written comment on or objection to a published ruling may be filed at any time with the General Counsel at the address specified in § 205.12.

§ 205.154 Appeal.

There is no administrative appeal of a ruling.

Subpart L [Reserved]

Subpart M—Conferences, Hearings, and Public Hearings

§ 205.170 Purpose and scope.

This subpart establishes the procedures for requesting and conducting a DOE conference, hearing, or public hearing. Such proceedings shall be convened in the discretion of the DOE, consistent with the requirements of the FEAA.

§ 205.171 Conferences.

(a) The DOE in its discretion may direct that a conference be convened, on its own initiative or upon request by a person, when it appears that such conference will materially advance the proceeding. The determination as to who may attend a conference convened under this subpart shall be in the discretion of the DOE, but a conference will usually not be open to the public.

(b) A conference may be requested in connection with any proceeding of the DOE by any person who might be aggrieved by that proceeding. The request may be made in writing or verbally, but must include a specific showing as to why such conference will materially advance the proceeding. The request shall be addressed to the DOE office that is conducting the proceeding.

(c) A conference may only be convened after actual notice of the time, place, and nature of the conference is provided to the person who requested the conference.

(d) When a conference is convened in accordance with this section, each person may present views as to the issue or issues involved. Documentary evidence may be presented at the conference, but will be treated as if submitted in the regular course of the proceedings. A transcript of the conference will not usually be prepared. However, the DOE in its discretion may have a verbatim transcript prepared.

(e) Because a conference is solely for the exchange of views incident to a proceeding, there will be no formal reports or findings unless the DOE in its discretion determines that such would be advisable.

§ 205.172 Hearings.

(a) The DOE in its discretion may direct that a hearing be convened on its own initiative or upon request by a person, when it appears that such hearing will materially advance the proceedings. The determination as to who may attend a hearing convened under this subpart shall be in the discretion of DOE, but a hearing will usually not be open to the public. Where the hearing involves a matter arising under part 213, the Director of Oil Imports shall be notified as to its time and place, in order that he or his representative may present views as to the issue or issues involved.

(b) A hearing may only be requested in connection with an application for an exception or an appeal. Such request may be by the applicant, appellant, or any other person who might be aggrieved by the DOE action sought. The request shall be in writing and shall include a specific showing as to why such hearing will materially advance the proceeding. The request shall be addressed to the DOE office that is considering the application for an exception or the appeal.

(c) The DOE will designate an agency official to conduct the hearing, and will specify the time and place for the hearing.

(d) A hearing may only be convened after actual notice of the time, place, and nature of the hearing is provided both to the applicant or appellant and to any other person readily identifiable by the DOE as one who will be aggrieved by the DOE action involved. The notice shall include, as appropriate:

(1) A statement that such person may participate in the hearing; or

(2) A statement that such person may request a separate conference or hearing regarding the application or appeal.

(e) When a hearing is convened in accordance with this section, each person may present views as to the issue or issues involved. Documentary evidence may be presented at the hearing, but will be treated as if submitted in the regular course of the proceedings. A transcript of the hearing will not usually be prepared. However, the DOE in its discretion may have a verbatim transcript prepared.

(f) The official conducting the hearing may administer oaths and affirmations, rule on the presentation of information, receive relevant information, dispose of procedural requests, determine the format of the hearing, and otherwise regulate the course of the hearing.

(g) Because a hearing is solely for the exchange of views incident to a proceeding, there will be no formal reports or findings unless the DOE in its discretion determines that such would be advisable.

[39 FR 35489, Oct. 1, 1974, as amended at 40 FR 36557, Aug. 21, 1975]

§ 205.173 Public hearings.

(a) A public hearing shall be convened incident to a rulemaking:

(1) When the proposed rule or regulation is likely to have a substantial impact on the Nation's economy or large numbers of individuals or businesses; or

(2) When the DOE determines that a public hearing would materially advance the consideration of the issue. A public hearing may be requested by any interested person in connection with a rulemaking proceeding, but shall only be convened on the initiative of the DOE unless otherwise required by statute.

(b) A public hearing may be convened incident to any proceeding when the DOE in its discretion determines that such public hearing would materially advance the consideration of the issue.

(c) A public hearing may only be convened after publication of a notice in the FEDERAL REGISTER, which shall include a statement of the time, place, and nature of the public hearing.

(d) Interested persons may file a request to participate in the public hearing in accordance with the instructions in the notice published in the FEDERAL REGISTER. The request shall be in writing and signed by the person making the request. It shall include a description of the person's interest in the issue or issues involved and of the anticipated content of the presentation. It shall also contain a statement explaining why the person would be an appropriate spokesperson for the particular view expressed.

(e) The DOE shall appoint a presiding officer to conduct the public hearing. An agenda shall be prepared that shall provide, to the extent practicable, for the presentation of all relevant views by competent spokespersons.

(f) A verbatim transcript shall be made of the hearing. The transcript, together with any written comments submitted in the course of the proceeding, shall be made available for public inspection and copying in the public docket room, as provided in § 205.15.

(g) The information presented at the public hearing, together with the written comments submitted and other relevant information developed during the course of the proceeding, shall provide the basis for the DOE decision.

Subpart N [Reserved]

Subpart O—Notice of Probable Violation, Remedial Order, Notice of Proposed Disallowance, and Order of Disallowance

AUTHORITY: Emergency Petroleum Allocation Act of 1973, Pub. L. 93–159, as amended, Pub. L. 93–511, Pub. L. 94–99, Pub. L. 94–133, Pub. L. 94–163, and Pub. L. 94–385, Federal Energy Administration Act of 1974, Pub. L. 93–275, as amended, Pub. L. 94–332, Pub. L. 94–385, Pub. L. 95–70, Pub. L. 95–91; Energy Policy and Conservation Act, Pub. L. 94–163, as amended, Pub. L. 94–385, Pub. L. 95–70, Department of Energy Organization Act, Pub. L. 95–91, as amended, Pub. L. 95–620; E.O. 11790, 39 FR 23185; E.O. 12009, 42 FR 46267.

SOURCE: 44 FR 7924, Feb. 7, 1979, unless otherwise noted.

§ 205.190 Purpose and scope.

(a) This subpart establishes the procedures for determining the nature and extent of violations of the DOE regulations in parts 210, 211, and 212 and the procedures for issuance of a Notice of Probable Violation, a Proposed Remedial Order, a Remedial Order, an Interim Remedial Order for Immediate Compliance, a Remedial Order for Immediate Compliance, a Notice of Probable Disallowance, a Proposed Order of Disallowance, an Order of Disallowance, or a Consent Order. Nothing in these regulations shall affect the authority of DOE enforcement officials in coordination with the Department of Justice to initiate appropriate civil or criminal enforcement actions in court at any time.

(b) When any report required by the ERA or any audit or investigation discloses, or the ERA otherwise discovers, that there is reason to believe a violation of any provision of this chapter, or any order issued thereunder, has occurred, is continuing or is about to occur, the ERA may conduct an inquiry to determine the nature and extent of the violation. A Remedial Order or Order of Disallowance may be issued thereafter by the Office of Hearings and Appeals. The ERA may commence enforcement proceedings by serving a Notice of Probable Violation, a Notice of Probable Disallowance, a Proposed Remedial Order, a Proposed Order of Disallowance, or an Interim Remedial Order for Immediate Compliance.

§ 205.191 [Reserved]

§ 205.192 Proposed remedial order.

(a) If the ERA finds, after the 30-day or other period authorized for reply to the Notice of Probable Violation, that a violation has occurred, is continuing, or is about to occur, it may issue a Proposed Remedial Order, which shall set forth the relevant facts and law.

(b) The ERA may issue a Proposed Remedial Order at any time it finds that a violation has occurred, is continuing, or is about to occur even if it has not previously issued a Notice of Probable Violation.

(c) The ERA shall serve a copy of the Proposed Remedial Order upon the person to whom it is directed. The ERA shall promptly publish a notice in the FEDERAL REGISTER which states the person to whom the Proposed Remedial Order is directed, his address, and the products, dollar amounts, time period, and geographical area specified in the Proposed Remedial Order. The notice shall indicate that a copy of the Proposed Remedial Order with confidential information, if any, deleted may be obtained from the ERA and that within 15 days after the date of publication any aggrieved person may file a Notice of Objection with the Office of Hearings and Appeals of accordance with § 205.193. The ERA shall mail copies of the FEDERAL REGISTER notice to all readily identifiable persons who are likely to be aggrieved by issuance of the Proposed Remedial Order as a final order.

(d) The Proposed Remedial Order shall set forth the proposed findings of fact and conclusions of law upon which it is based. It shall also include a discussion of the relevant authorities which support the position asserted, including rules, regulations, rulings, interpretations and previous decisions issued by DOE or its predecessor agencies. The Proposed Remedial Order shall be accompanied by a declaration executed by the DOE employee primarily knowledgeable about the facts of the case stating that, to the best of declarant's knowledge and belief, the findings of fact are correct.

(e) The ERA may amend or withdraw a Proposed Remedial Order at its discretion prior to the date of service of a Statement of Objections in that proceeding. The date of service of the amended documents shall be considered the date of service of the Proposed Remedial Order in calculating the time periods specified in this part 205.

§ 205.192A Burden of proof.

(a) In a Proposed Remedial Order proceeding the ERA has the burden of establishing a prima facie case as to the validity of the findings of fact and conclusions of law asserted therein. The ERA shall be deemed to meet this burden by the service of a Proposed Remedial Order that meets the requirements of § 205.192(d) and any supplemental information that may be made available under § 205.193A.

(b) Once a prima facie case has been established, a person who objects to a finding of fact or conclusion of law in the Proposed Remedial Order has the burden of going forward with the evidence. Furthermore, the proponent of additional factual representations has the burden of going forward with the evidence.

(c) Unless otherwise specified by the Director of the Office of Hearings and Appeals or his designee, the proponent of an order or a motion or additional factual representations has the ultimate burden of persuasion.

§ 205.193 Notice of Objection.

(a) Within 15 days after publication of the notice of a Proposed Remedial Order in the FEDERAL REGISTER any aggrieved person may file a Notice of Objection to the Proposed Remedial Order with the Office of Hearings and Appeals. The Notice shall be filed in duplicate, shall briefly describe how the person would be aggrieved by issuance of the Proposed Remedial Order as a final order and shall state the person's intention to file a Statement of Objections. No confidential information shall be included in a Notice of Objection. The DOE shall place one copy of the Notice in the Office of Hearings and Appeals Public Docket Room.

(b) A person who fails to file a timely Notice of Objection shall be deemed to have admitted the findings of fact and conclusions of law as stated in the Proposed Remedial Order. If a Notice of Objection is not filed as provided by paragraph (a) of this section, the Proposed Remedial Order may be issued as a final order.

(c) A person who files a Notice of Objection shall on the same day serve a copy of the Notice upon the person to whom the Proposed Remedial Order is directed, the DOE Office that issued the Proposed Remedial Order, and the DOE Assistant General Counsel for Administrative Litigation.

(d) The Notice shall include a certification of compliance with the provisions of this section, the names and addresses of each person served with a copy of the Notice, and the date and manner of service.

(e) If no person files a timely Notice of Objection, ERA may request the Office of Hearings and Appeals to issue the Proposed Remedial Order as a final Remedial Order.

(f) In order to exhaust administrative remedies with respect to a Remedial Order proceeding, a person must file a timely Notice of Objection and Statement of Objections with the Office of Hearings and Appeals.

§ 205.193A Submission of ERA supplemental information.

Within 20 days after service of a Notice of Objection to a Proposed Remedial Order the ERA may serve, upon the person to whom the Proposed Remedial Order was directed, supplemental information relating to the calculations and determinations which support the findings of fact set forth in the Proposed Remedial Order.

§ 205.194 Participants; official service list.

(a) Upon receipt of a Notice of Objection, the Office of Hearings and Appeals shall publish a notice in the FEDERAL REGISTER which states the person to whom the Proposed Remedial Order is directed, his address and the products, dollar amounts, time period, and geographical area specified in the Proposed Remedial Order. The notice shall state that any person who wishes to participate in the proceeding must file an appropriate request with the Office of Hearings and Appeals.

(b) The Office that issued the Proposed Remedial Order and the person to whom the Order is directed shall be considered participants before the Office of Hearings and Appeals at all stages of an enforcement proceeding. Any other person whose interest may be affected by the proceeding may file a request to participate in the proceeding with the Office of Hearings and Appeals within 20 days after publication of the notice referred to in paragraph (a) of this section. The request shall contain

(1) The person's name, address, and telephone number and similar information concerning his duly authorized representative, if any;

(2) A detailed description of the person's interest in the proceeding;

(3) The specific reasons why the person's active involvement in the proceeding will substantially contribute to a complete resolution of the issues to be considered in the proceeding;

(4) A statement of the position which the person intends to adopt in the proceeding; and

(5) A statement of the particular aspects of the proceeding, e.g. oral argument, submission of briefs, or discovery, in which the person wishes to actively participate.

(c) After considering the requests submitted pursuant to paragraph (b) of this section, the Office of Hearings and Appeals shall determine those persons who may participate on an active basis in the proceeding and the nature of their participation. Participants with similar interests may be required to consolidate their submissions and to appear in the proceeding through a common representative.

(d) Within 30 days after publication of the notice referred to in paragraph (a) of this section, the Office of Hearings and Appeals shall prepare an official service list for the proceeding. Within the same 30 day period the Office of Hearings and Appeals shall mail the official service list to all persons who filed requests to participate. For good cause shown a person may be placed on the official service list as a non-participant, for the receipt of documents only. An opportunity shall be afforded to participants to oppose the placement of a non-participant on the official service list.

(e) A person requesting to participate after the period for submitting requests has expired must show good cause for failure to file a request within the prescribed time period.

(f) The Office of Hearings and Appeals may limit the nature of a person's participation in the proceeding, if it finds that the facts upon which the person's request was based have changed or were incorrect when stated or that the person has not been actively participating or has engaged in disruptive or dilatory conduct. The action referred to in this provision shall be taken only after notice and an opportunity to be heard are afforded.

§ 205.195 Filing and service of all submissions.

(a)(1) Statements of Objections, Responses to such Statements, and any motions or other documents filed in connection with a proceeding shall meet the requirements of § 205.9 and shall be filed with the Office of Hearings and Appeals in accordance with § 205.4. Unless otherwise specified, any participant may file a response to a motion within five days of service.

(2) All documents shall be filed in duplicate, unless they contain confidential information, in which case they must be filed in triplicate.

(3) If a person claims that any portion of a document which he is filing contains confidential information, such information should be deleted from two of the three copies which are filed. One copy from which confidential information has been deleted will be placed in the Office of Hearings and Appeals Public Docket Room.

(b)(1) Persons other than DOE offices shall on the date a submission is filed serve each person on the official service list. Service shall be made in accordance with § 205.7 and may also be made by deposit in the regular United States mail, properly stamped and addressed, when accompanied by proof of service consisting of a certificate of counsel or an affidavit of the person making the service. If any filing arguably contains confidential information, a person may serve copies with the confidential information deleted upon all persons on the official service list except DOE offices, which shall be served both an original filing and one with deletions.

(2) A DOE office shall on the date it files a submission serve all persons on the official service list, unless the filing arguably contains confidential information. In that case the DOE office shall notify the person to whom the information relates of the opportunity to identify and delete the confidential information. The DOE Office may delay the service of a submission containing arguably confidential information upon all persons other than the possessor of the confidential information and other DOE offices up to 14 days. The possessor of the confidential information shall serve the filing with any

deletions upon all persons on the official service list within such time period.

(c) Any filing made under this section shall include a certification of compliance by the filer with the provisions of this subpart. The person serving a document shall file a certificate of service, which includes the date and manner of service for each person on the official service list.

§ 205.196 Statement of objections.

(a) A person who has filed a Notice of Objection shall file a Statement of Objections to a Proposed Remedial Order within 40 days after service of the Notice of Objection. A request for an extension of time for filing must be submitted in writing and may be granted for good cause shown.

(b) The Statement of Objections shall set forth the bases for the objections to the issuance of the Proposed Remedial Order as a final order, including a specification of the issues of fact or law which the person intends to contest in any further proceeding involving the compliance matter which is the subject of the Proposed Remedial Order. The Statement shall set forth the findings of fact contained in the Proposed Remedial Order which are alleged to be erroneous, the factual basis for such allegations, and any alternative findings which are sought. The Statement shall include a discussion of all relevant authorities which support the position asserted. The Statement may include additional factual representations which are not referred to in the Proposed Remedial Order and which the person contends are material and relevant to the compliance proceeding. For each additional factual representation which the person asserts should be made, the Statement shall include reasons why the factual representation is relevant and material, and the manner in which its validity is or will be established. The person shall also specify the manner in which each additional issue of fact was raised in any prior administrative proceeding which led to issuance of the Proposed Remedial Order, or the reasons why it was not raised.

(c) A Statement of Objections that is filed by the person to whom a Proposed Remedial Order is directed shall include a copy of any relevant Notice of Probable Violation, each Response thereto, the Proposed Remedial Order, and any relevant work papers or supplemental information previously provided by ERA. Copies of this material must also be included with the copy of the Statement of Objections served upon the DOE Assistant General Counsel for Administrative Litigation. All other persons on the official service list must be notified that such materials are available from the notifier upon written request.

§ 205.197 Response to statement of objections; reply.

(a) Within 30 days after service of a Statement of Objections each participant may file a Response. If any motions are served with the Statement of Objections, a participant shall have 30 days from the date of service to respond to such submissions, notwithstanding any shorter time periods otherwise required in this subpart. The Response shall contain a full discussion of the position asserted and a discussion of the legal and factual bases which support that position. The Response may also contain a request that any issue of fact or law advanced in a Statement of Objections be dismissed. Any such request shall be accompanied by a full discussion of the reasons supporting the dismissal.

(b) A participant may submit a Reply to any Response within 10 days after the date of service of the Response.

§ 205.198 Discovery.

(a) If a person intends to file a Motion for Discovery, he must file it at the same time that he files his Statement of Objections or at the same time he files his Response to a Statement of Objections, whichever is earlier. All Motions for Discovery and related filings must be served upon the person to whom the discovery is directed. If the person to whom the discovery is directed is not on the official service list, the documents served upon him shall include a copy of this section, the address of the Office of Hearings and Appeals and a statement that objections to the Motion may be filed with the Office of Hearings and Appeals.

(b) A Motion for Discovery may request that:

(1) A person produce for inspection and photocopying non-privileged written material in his possession;

(2) A person respond to written interrogatories;

(3) A person admit to the genuineness of any relevant document or the truth of any relevant fact; or

(4) The deposition of a material witness be taken.

(c) A Motion for Discovery shall set forth the reasons why the particular discovery is necessary in order to obtain relevant and material evidence and shall explain why such discovery would not unduly delay the proceeding.

(d) Within 20 days after a Motion for Discovery is served, a participant or a person to whom the discovery is directed may file a request that the Motion be denied in whole or in part, stating the reasons which support the request.

(e) Discovery may be conducted only pursuant to an Order issued by the Office of Hearings and Appeals. A Motion for Discovery will be granted if it is concluded that discovery is necessary for the party to obtain relevant and material evidence and that discovery will not unduly delay the proceeding. Depositions will be permitted if a convincing showing is made that the participant cannot obtain the material sought through one of the other discovery means specified in paragraph (b) of this section.

(f) The Director of the Office of Hearings and Appeals or his designee may issue subpoenas in accordance with § 205.8 in support of Discovery Orders, except that § 205.8 (h)(2), (3), and (4) shall not apply to such subpoenas.

(g) The Office of Hearings and Appeals may order that any direct expenses incurred by a person to produce evidence pursuant to a Motion for Discovery be charged to the person who filed the Motion.

(h)(1) If a person fails to comply with an order relating to discovery, the Office of Hearings and Appeals may order appropriate sanctions.

(2) It shall be the duty of aggrieved participants to request that appropriate relief be fashioned in such situations.

(i) Any order issued by the Office of Hearings and Appeals with respect to discovery shall be subject to further administrative review or appeal only upon issuance of the determination referred to in § 205.199B.

§ 205.198A Protective order.

A participant who has unsuccessfully attempted in writing to obtain information that another participant claims is confidential may file a Motion for Discovery and Protective Order. This motion shall meet the requirements of § 205.198 and shall specify the particular confidential information that the movant seeks and the reasons why the information is necessary to adequately present the movant's position in the proceeding. A copy of the written request for information, a certification concerning when and to whom it was served and a copy of the response, if any, shall be appended to the motion. The motion must give the possessor of the information notice that a Response to the Motion must be filed within ten days. The Response shall specify the safeguards, if any, that should be imposed if the information is ordered to be released. The Office of Hearings and Appeals may issue a Protective Order upon consideration of the Motion and the Response.

§ 205.199 Evidentiary hearing.

(a) *Filing Requirements.* At the time a person files a Statement of Objections he may also file a motion requesting an evidentiary hearing be convened. A motion requesting an evidentiary hearing may be filed by any other participant within 30 days after that participant is served with a Statement of Objections.

(b) *Contents of Motion for Evidentiary Hearing.* A Motion for Evidentiary Hearing shall specify each disputed issue of fact and the bases for the alternative findings the movant asserts. The movant shall also describe the manner in which each disputed issue of fact was raised in any prior administrative proceeding which led to issuance of the Proposed Remedial Order, or why it was not raised. The movant shall with respect to each disputed or alternative finding of fact:

(1) As specifically as possible, identify the witnesses whose testimony is required;

(2) State the reasons why the testimony of the witnesses is necessary; and

(3) State the reasons why the asserted position can be effectively established only through the direct questioning of witnesses at an evidentiary hearing.

(c) *Response to Motion for Evidentiary Hearing*. Within 20 days after service of any Motion for Evidentiary Hearing, the Office that issued the Proposed Remedial Order shall, and any other participant may file a Response with the Office of Hearings and Appeals. The Response shall specify:

(1) Each particular factual representation which is accepted as correct for purposes of the proceeding;

(2) Each particular factual representation which is denied;

(3) Each particular factual representation which the participant is not in a position to accept or deny;

(4) Each particular factual representation which is not accepted and the participant wishes proven by the submission of evidence;

(5) Each particular factual representation which the participant is prepared to dispute through the testimony of witnesses or the submission of verified documents; and

(6) Each particular factual representation which the participant asserts should be dismissed as immaterial or irrelevant.

(d) *Prehearing Conferences*. After all submissions with respect to a Motion for Evidentiary Hearing are filed, the Office of Hearings and Appeals may conduct conferences or hearings to resolve differences of view among the participants.

(e) *Decision on Motion for Evidentiary Hearing*. After considering all relevant information received in connection with the Motion, the Office of Hearings and Appeals shall enter an Order. In the Order the Office of Hearings and Appeals shall direct that an evidentiary hearing be convened if it concludes that a genuine dispute exists as to relevant and material issues of fact and an evidentiary hearing would substantially assist it in making findings of fact in an effective manner. If the Motion for Evidentiary Hearing is granted in whole or in part, the Order shall specify the parties to the hearing, any limitations on the participation of a party, and the issues of fact set forth for the evidentiary hearing. The Order may also require parties that have adopted similar positions to consolidate their presentations and to appear at the evidentiary hearing through a common representative. If the Motion is denied, the Order may allow the movant to file affidavits and other documents in support of his asserted findings of fact.

(f) *Review of Decision*. The Order of the Office of Hearings and Appeals with respect to a Motion for Evidentiary Hearing shall be subject to further administrative review or appeal only upon issuance of the determination referred to in § 205.199B.

(g) *Conduct of Evidentiary Hearing*. All evidentiary hearings convened pursuant to this section shall be conducted by the Director of the Office of Hearings and Appeals or his designee. At any evidentiary hearing the parties shall have the opportunity to present material evidence which directly relates to a particular issue of fact set forth for hearing. The presiding officer shall afford the parties an opportunity to cross examine all witnesses. The presiding officer may administer oaths and affirmations, rule on objections to the presentation of evidence, receive relevant material, rule on any motion to conform the Proposed Remedial Order to the evidence presented, rule on motions for continuance, dispose of procedural requests, determine the format of the hearing, modify any order granting a Motion for Evidentiary Hearing, direct that written motions or briefs be provided with respect to issues raised during the course of the hearing, issue subpoenas, and otherwise regulate the conduct of the hearing. The presiding officer may take reasonable measures to exclude duplicative material from the hearing, and may place appropriate limitations on the number of witnesses that may be called by a party. The presiding officer may also require that evidence be submitted through affidavits or other documents if the direct testimony of witnesses will unduly delay the orderly

progress of the hearing and would not contribute to resolving the issues involved in the hearing. The provisions of § 205.8 which relate to subpoenas and witness fees shall apply to any evidentiary hearing, except that subsection § 205.8(h) (2), (3), and (4) shall not apply.

§ 205.199A Hearing for the purpose of oral argument only.

(a) A participant is entitled upon timely request to a hearing to present oral argument with respect to the Proposed Remedial Order, whether or not an evidentiary hearing is requested or convened. A participant's request shall normally be considered untimely, if made more than 10 days after service of a determination regarding any motion filed by the requestor or, if no motions were filed by him, if made after the date for filing his Reply or his Response to a Statement of Objections.

(b) If an evidentiary hearing is convened, and a hearing for oral argument is requested, the Office of Hearings and Appeals shall determine whether the hearing for oral argument shall be held in conjunction with the evidentiary hearing or at a separate time.

(c) A hearing for the purpose of receiving oral argument will generally be conducted only after the issues involved in the proceeding have been delineated, and any written material which the Office of Hearings and Appeals has requested to supplement a Statement of Objections or Responses has been submitted. The presiding officer may require further written submissions in support of any position advanced or issued at the hearing, and shall allow responses any such submissions.

§ 205.199B Remedial order.

(a) After considering all information received during the proceeding, the Director of the Office of Hearings and Appeals or his designee may issue a final Remedial Order. The Remedial Order may adopt the findings and conclusions contained in the Proposed Remedial Order or may modify or rescind any such finding or conclusion to conform the Order to the evidence or on the basis of a determination that the finding or conclusion is erroneous in fact or law or is arbitrary or capricious. In the alternative, the Office of Hearings and Appeals may determine that no Remedial Order should be issued or may remand all or a portion of the Proposed Remedial Order to the issuing DOE office for further consideration or modification. Every determination made pursuant to this section shall state the relevant facts and legal bases supporting the determination.

(b) The DOE shall serve a copy of any determination issued pursuant to paragraph (a) of this section upon the person to whom it is directed, any person who was served with a copy of the Proposed Remedial Order, the DOE office that issued the Proposed Remedial Order, the DOE Assistant General Counsel for Administrative Litigation and any other person on the official service list. Appropriate deletions may be made in the determinations to ensure that confidentiality of information protected from disclosure under 18 U.S.C. 1905 and 5 U.S.C. 552. A copy of the determination with appropriate deletions to protect confidential and proprietary data shall be placed in the Office of Hearings and Appeals Public Docket Room.

§ 205.199C Appeals of remedial order to FERC.

(a) The person to whom a Remedial Order is issued by the Office of Hearings and Appeals may file an administrative appeal if the Remedial Order proceeding was initiated by a Notice of Probable Violation issued after October 1, 1977, or, in those situations in which no Notice of Probable Violation was issued, if the proceeding was initiated by a Proposed Remedial Order issued after October 1, 1977.

(b) Any such appeal must be initiated within 30 days after service of the Order by giving written notice to the Office of Hearings and Appeals that the person to whom a Remedial Order is issued wishes to contest the Order.

(c) The Office of Hearings and Appeals shall promptly advise the Federal Energy Regulatory Commission of its receipt of a notice described in paragraph (b) of this section.

(d) The Office of Hearings and Appeals may, on a case by case basis, set reasonable time limits for the Federal

Energy Regulatory Commission to complete its action on such an appeal proceeding.

(e) In order to exhaust administrative remedies, a person who is entitled to appeal a Remedial Order issued by the Office of Hearings and Appeals must file a timely appeal and await a decision on the merits. Any Remedial Order that is not appealed within the 30-day period shall become effective as a final Order of the DOE and is not subject to review by any court.

§§205.199D–205.199E [Reserved]

§205.199F Ex parte communications.

(a) No person who is not employed or otherwise supervised by the Office of Hearings and Appeals shall submit ex parte communications to the Director or any person employed or otherwise supervised by the Office with respect to any matter involved in Remedial Order or Order of Disallowance proceedings.

(1) Ex parte communications include any ex parte oral or written communications relative to the merits of a Proposed Remedial Order, Interim Remedial Order for Immediate Compliance, or Proposed Order of Disallowance proceeding pending before the Office of Hearings and Appeals. The term shall not, however, include requests for status reports, inquiries as to procedures, or the submission of proprietary or confidential information. Notice that proprietary or confidential submissions have been made shall be given to all persons on the official service list.

(b) If any communication occurs that violates the provisions of this section, the Office of Hearings and Appeals shall promptly make the substance of the communication available to the public and serve a copy of a written communication or a memorandum summarizing an oral communication to all participants in the affected proceeding. The Office of Hearings and Appeals may also take any other appropriate action to mitigate the adverse impact to any person whose interest may be affected by the ex parte contact.

§205.199G Extension of time; Interim and Ancillary Orders.

The Director of the Office of Hearings and Appeals or his designee may permit upon motion any document or submission referred to in this subpart other than appeals to FERC to be amended or withdrawn after it has been filed or to be filed within a time period different from that specified in this subpart. The Director or his designee may upon motion or on his own initiative issue any interim or ancillary Orders, reconsider any determinations, or make any rulings or determinations that are deemed necessary to ensure that the proceedings specified in this subpart are conducted in an appropriate manner and are not unduly delayed.

§205.199H Actions not subject to administrative appeal.

A Notice of Probable Violation, Notice of Proposed Disallowance, Proposed Remedial Order or Interim Remedial Order for Immediate Compliance issued pursuant to this subpart shall not be an action from which there may be an administrative appeal pursuant to subpart H. In addition, a determination by the Office of Hearings and Appeals that a Remedial Order, an Order of Disallowance, or a Remedial Order for Immediate Compliance should not be issued shall not be appealable pursuant to subpart H.

§205.199I Remedies.

(a) A Remedial Order, a Remedial Order for Immediate Compliance, an Order of Disallowance, or a Consent Order may require the person to whom it is directed to roll back prices, to make refunds equal to the amount (plus interest) charged in excess of those amounts permitted under DOE Regulations, to make appropriate compensation to third persons for administrative expenses of effectuating appropriate remedies, and to take such other action as the DOE determines is necessary to eliminate or to compensate for the effects of a violation or any cost disallowance pursuant to §212.83 or §212.84. Such action may include a direction to the person to whom the Order is issued to establish an escrow account or take other measures to

make refunds directly to purchasers of the products involved, notwithstanding the fact that those purchasers obtained such products from an intermediate distributor of such person's products, and may require as part of the remedy that the person to whom the Order is issued maintain his prices at certain designated levels, notwithstanding the presence or absence of other regulatory controls on such person's prices. In cases where purchasers cannot be reasonably identified or paid or where the amount of each purchaser's overcharge is incapable of reasonable determination, the DOE may refund the amounts received in such cases directly to the Treasury of the United States on behalf of such purchasers.

(b) The DOE may, when appropriate, issue final Orders ancillary to a Remedial Order, Remedial Order for Immediate Compliance, Order of Disallowance, or Consent Order requiring that a direct or indirect recipient of a refund pass through, by such means as the DOE deems appropriate, including those described in paragraph (a) of this section, all or a portion of the refund, on a pro rata basis, to those customers of the recipient who were adversely affected by the initial overcharge. Ancillary Orders may be appealed to the Office of Hearings and Appeals only pursuant to subpart H.

§ 205.199J Consent order.

(a) Notwithstanding any other provision of this subpart, the DOE may at any time resolve an outstanding compliance investigation or proceeding, or a proceeding involving the disallowance of costs pursuant to § 205.199E with a Consent Order. A Consent Order must be signed by the person to whom it is issued, or a duly authorized representative, and must indicate agreement to the terms contained therein. A Consent Order need not constitute an admission by any person that DOE regulations have been violated, nor need it constitute a finding by the DOE that such person has violated DOE regulations. A Consent Order shall, however, set forth the relevant facts which form the basis for the Order.

(b) A Consent Order is a final Order of the DOE having the same force and effect as a Remedial Order issued pursuant to § 205.199B or an Order of Disallowance issued pursuant to § 205.199E, and may require one or more of the remedies authorized by § 205.199I and § 212.84(d)(3). A Consent Order becomes effective no sooner than 30 days after publication under paragraph (c) of this section, unless (1) the DOE makes a Consent Order effective immediately, because it expressly deems it necessary in the public interest, or (2) the Consent Order involves a sum of less than $500,000 in the aggregate, excluding penalties and interest, in which case it will be effective when signed both by the person to whom it is issued and the DOE, and will not be subject to the provisions of paragraph (c) of this section unless the DOE determines otherwise. A Consent Order shall not be appealable pursuant to the provisions of § 205.199C or § 205.199D and subpart H, and shall contain an express waiver of such appeal or judicial review rights as might otherwise attach to a final Order of the DOE.

(c) When a Consent Order has been signed, both by the person to whom it is issued and the DOE, the DOE will publish notice of such Consent Order in the FEDERAL REGISTER and in a press release to be issued simultaneously therewith. The FEDERAL REGISTER notice and the press release will state at a minimum the name of the company concerned, a brief summary of the Consent Order and other facts or allegations relevant thereto, the address and telephone number of the DOE office at which copies of the Consent Order will be available free of charge, the address to which comments on the Consent Order will be received by the DOE, and the date by which such comments should be submitted, which date will not be less than 30 days after publication of the FEDERAL REGISTER notice. After the expiration of the comment period the DOE may withdraw its agreement to the Consent Order, attempt to negotiate a modification of the Consent Order, or issue the Consent Order as signed. The DOE will publish in the FEDERAL REGISTER, and by press release, notice of any action taken on a Consent Order and such explanation of

the action taken as deemed appropriate. The provisions of this paragraph shall be applicable notwithstanding the fact that a Consent Order may have been made immediately effective pursuant to paragraph (b) of this section (except in cases where the Consent Order involves sums of less than $500,000 in the aggregate, excluding penalties and interest).

(d) At any time and in accordance with the procedures of subpart J, a Consent Order may be modified or rescinded, upon petition by the person to whom the Consent Order was issued, and may be rescinded by the DOE upon discovery of new evidence which is materially inconsistent with evidence upon which the DOE's acceptance of the Consent Order was based. Modifications of a Consent Order which is subject to public comment under the provisions of paragraph (c) of this section, which in the opinion of the DOE significantly change the terms or the impact of the original Order, shall be republished under the provisions of that paragraph.

(e) Notwithstanding the issuance of a Consent Order, the DOE may seek civil or criminal penalties or compromise civil penalties pursuant to subpart P concerning matters encompassed by the Consent Order, unless the Consent Order by its terms expressly precludes the DOE from so doing.

(f) If at any time after a Consent Order becomes effective it appears to the DOE that the terms of the Consent Order have been violated, the DOE may refer such violations to the Department of Justice for appropriate action in accordance with subpart P.

Subparts P–T [Reserved]

Subpart U—Procedures for Electricity Export Cases

AUTHORITY: Federal Power Act, 41 Stat. 1063, as amended; Executive Order 10485, as amended by Executive Order 12038; Federal Energy Administration Act of 1974, Pub. L. 93–275, as amended; Pub. L. 94–332, Pub. L. 94–385, Pub. L. 95–70, and Pub. L. 95–91; Energy Policy and Conservation Act, Pub. L. 95–70; Department of Energy Organization Act, Pub. L. 95–91; E.O. 11790, 39 FR 23185; E.O. 12009, 42 FR 46267.

SOURCE: 49 FR 35315, Sept. 6, 1984, unless otherwise noted.

§ 205.260 Purpose and scope.

(a) The purpose of this section is to state the procedures that will be followed by the Economic Regulatory Administration of the Department of Energy in electricity export adjudications.

(b) *Definitions.* As used in this subpart—

Administrator means the Administrator of the Economic Regulatory Administration.

Decisional employees means the Administrator, presiding officers at adjudicatory hearings, and other employees of the Department, including consultants and contractors, who are, or may reasonably be expected to be, involved in the decision-making process, which includes advising the Administrator in resolving the issues in an adjudication. The term does not include those employees of the Department performing investigative or trial functions in an adjudication, unless they are specifically requested by the Administrator or his delegate to participate in the decision-making process.

Department means the Department of Energy.

Off-the-record communication means an *ex parte* communication, which is an oral or written communication relevant to the merits of an adjudication and not on the record and with respect to which reasonable prior notice to all participants and opportunity to be present at, or respond to, the communication is not given, but does not include a communication relating solely to procedures which are not relevant to the merits of the adjudication.

Interested person means a person outside the Department whose interest in the adjudication goes beyond the general interest of the public as a whole and includes applicants, intervenors, competitors of applicants, non-profit and public interest organizations, and other individuals and organizations, including state, local and other public officials, with a proprietary, financial or other special interest in the outcome of the adjudication. The term does not include other federal agencies, unless an

agency is a participant in the adjudication.

Participant means any applicant or intervenor participating in the adjudication.

Adjudication means a formal proceeding employing procedures identical or similar to those required by the Administrative Procedure Act, as codified in 5 U.S.C. 551, 556, and 557, to consider an application to export electricity.

Reasonable prior notice means 7 days' written notice stating the nature and purpose of the communication.

Relevant to the merits means a communication directly related to the merits of a specific adjudication but does not include general background discussions about an entire industry or communications of a general nature made in the course of developing agency policy for future general application.

§§ 205.261–205.269 [Reserved]

§ 205.270 Off-the-record communications.

(a) In any proceeding which is subject to this subpart—

(1) No interested person shall make an off-the-record communication or knowingly cause an off-the-record communication to be made to any decisional employee.

(2) No decisional employee shall make an off-the-record communication or knowingly cause an off-the-record communication to be made to any interested person.

(3) A decisional employee who receives, makes, or knowingly causes to be made an oral communication prohibited by this section shall prepare a memorandum stating the substance of the communication and any responses made to it.

(4) With 48 hours of receiving, making or knowingly causing to be made a communication prohibited by this section, a decisional employee shall deliver all written off-the-record communications and all memoranda prepared in compliance with paragraph (a)(3) of this section to the Director of the Coal and Electricity Division, ERA, who will immediately place the materials described above in the public record associated with the adjudication, available for public inspection.

(5) Upon receipt of a communication knowingly made or knowingly caused to be made by a participant in violation of this section, the Administrator or presiding officer may, to the extent consistent with the interests of justice and the applicable statutory policy, require the participant to show cause why his or her claim or interest in the adjudication should not be dismissed, denied, disregarded, or otherwise adversely affected on account of the violation.

(6) The prohibitions of this section shall apply beginning at the time an adjudication is noticed for hearing (or the person responsible for the communication acquires knowledge that it will be noticed), a protest is filed, or a petition or notice to intervene in opposition to the requested Department action is filed, whichever occurs first.

(b) The prohibition, cited at 18 CFR 1.30(f), against participation in the decision-making process by Department employees who perform investigative or trial functions in an adjudication, shall no longer be applicable to ERA.

Subpart V—Special Procedures for Distribution of Refunds

AUTHORITY: Economic Stabilization Act of 1970, Pub. L. 92–210; Emergency Petroleum Allocation Act of 1973, Pub. L. 93–159, as amended, Pub. L. 93–511, Pub. L. 94–99, Pub. L. 94–133, Pub. L. 94–163, and Pub. L. 94–385, Federal Energy Administration Act of 1974, Pub. L. 93–275, as amended, Pub. L. 94–332, Pub. L. 94–332, Pub. L. 94–385, Pub. L. 95–70, Pub. L. 95–91, Energy Policy and Conservation Act, Pub. L. 94–163, as amended, Pub. L. 94–385, Pub. L. 95–70; Department of Energy Organization Act, Pub. L. 95–91; E.O. 11790, 39 FR 23185; E.O. 12009, 42 FR 46267.

SOURCE: 44 FR 8566, Feb. 9, 1979, unless otherwise noted.

§ 205.280 Purpose and scope.

This subpart establishes special procedures pursuant to which refunds may be made to injured persons in order to remedy the effects of a violation of the regulations of the Department of Energy. This subpart shall be applicable to those situations in which the Department of Energy is unable to readily identify persons who are entitled to

refunds specified in a Remedial Order, a Remedial Order for Immediate Compliance, an Order of Disallowance or a Consent Order, or to readily ascertain the amounts that such persons are entitled to receive.

§ 205.281 Petition for implementation of special refund procedures.

(a) At any time after the issuance of a Remedial Order (including for purposes of this subpart a Remedial Order for Immediate Compliance and an Order of Disallowance), or a Consent Order, the Special Counsel of the Department of Energy, the ERA Office of Enforcement, or any other enforcement official of the Department of Energy may file with the Office of Hearings and Appeals a Petition for the Implementation of Special Refund Procedures.

(b) The Petition shall state that the person filing it has been unable readily either to identify the persons who are entitled to refunds to be remitted pursuant to a Remedial Order or a Consent Order or to ascertain the amounts of refunds that such persons are entitled to receive. The Petition shall request that the Office of Hearings and Appeals institute appropriate proceedings under this subpart to distribute the funds referred to in the enforcement documents.

(c) The Petition shall contain a copy of each relevant enforcement document, shall be filed in duplicate, and shall meet the requirements of § 205.9 of this part.

§ 205.282 Evaluation of petition by the Office of Hearings and Appeals.

(a) After considering the Petition, the Director of the Office of Hearings and Appeals or his designee shall issue a Proposed Decision and Order. The Proposed Decision and Order shall generally describe the nature of the particular refund proceeding and shall set forth the standards and procedures that the Office of Hearings and Appeals intends to apply in evaluating refund claims.

(b) The Proposed Decision and Order shall be published in the FEDERAL REGISTER together with a statement that any member of the public may submit written comments to the Office of Hearings and Appeals with respect to the matter. At least 30 days following publication in the FEDERAL REGISTER shall be provided for the submission of comments.

(c) After considering the comments submitted, the Director of the Office of Hearings and Appeals or his designee shall issue a final Decision and Order which shall govern the disposition of the refunds. The final Decision and Order shall also be published in the FEDERAL REGISTER.

(d) The final Decision and Order shall set forth the standards and procedures that will be used in evaluating individual Applications for Refunds and distributing the refund amount. Those standards and procedures shall be consistent with the provisions of this subpart.

(e) In establishing standards and procedures for implementing refund distributions, the Office of Hearings and Appeals shall take into account the desirability of distributing the refunds in an efficient, effective and equitable manner and resolving to the maximum extent practicable all outstanding claims. In order to do so, the standards for evaluation of individual claims may be based upon appropriate presumptions.

§ 205.283 Applications for refund.

(a) Any person entitled to a refund pursuant to a final Decision and Order issued pursuant to § 205.282 may file an Application for Refund. All Applications must be signed by the applicant and specify the DOE order to which they pertain. Any Application for a refund in excess of $100 must be file in duplicate, and a copy of that Application will be available for public inspection in the DOE Public Docket Room at 2000 M Street, NW., Washington, DC. Any applicant who believes that his Application contains confidential information must so indicate on the first page of his Application and submit two additional copies of his Application from which the information that the applicant claims is confidential has been deleted, together with a statement specifying why any such information is privileged or confidential.

(b) The contents of an Application for Refund shall be specified in the final

Decision and Order referred to in § 205.282(c). A filing deadline for Applications shall also be specified in the final Decision and Order, and shall be no less than 90 days after the publication of the Order in the FEDERAL REGISTER.

(c) Each Application shall be in writing and signed by the applicant, and shall indicate whether the applicant or any person acting on his instructions has filed or intends to file any other Application or claim of whatever nature regarding the matters at issue in the underlying enforcement proceeding. Each Application shall also include a sworn statement by the applicant that all information in his Application is true and correct to the best of his knowledge and belief.

§ 205.284 Processing of applications.

(a) The Director of the Office of Hearings and Appeals may appoint an administrator to evaluate Applications under guidelines established by the Office of Hearings and Appeals. The administrator, if he is not a Federal Government employee, may be compensated from the funds referred to in the Remedial Order or Consent Order. The administrator may design and distribute an optional application form for the convenience of the applicants.

(b) The Office of Hearings and Appeals or its designee may initiate an investigation of any statement made in an Application and may require verification of any document submitted in support of a claim. In evaluating an Application, the Office of Hearings and Appeals or its designee may solicit and consider information obtained from any source and may on its own initiative convene a hearing or conference, if it determines that a hearing or conference will advance its evaluation of an Application.

(c) The Director of the Office of Hearings and Appeals or his designee shall conduct any hearing or conference convened with respect to an Application for Refund and shall specify the time and place for the hearing or conference and notify the applicant. The official conducting the hearing may administer oaths and affirmations, rule on the presentation of information, receive relevant information, dispose of procedural requests, determine the format of the hearing and otherwise regulate the course of the hearing. The provisions of § 205.8 of this part which relate to subpoenas and witness fees shall apply to any hearing convened with respect to an application for refund, except that § 205.8(h) (2), (3) and (4) shall not apply.

(d) Upon consideration of an Application and other relevant information received during the course of a refund proceeding, the Director of the Office of Hearings and Appeals or his designee shall issue an order granting or denying the Application. The order shall contain a concise statement of the relevant facts and the legal basis for the order. A copy of the order, with such modification as is necessary to ensure the confidentiality of information protected from public disclosure by 18 U.S.C. 1905, may be obtained upon request by an applicant or any other person who participated in the proceeding.

§ 205.285 Effect of failure to file a timely application.

An Application for Refund must be filed no later than the date that the Office of Hearings and Appeals establishes pursuant to § 205.283(b). Any Application that is not filed on a timely basis may be summarily dismissed. The Office of Hearings and Appeals or its designee may, however, grant extensions of time for good cause shown. Any request for an extension of time must generally be submitted in writing prior to the deadline.

§ 205.286 Limitations on amount of refunds.

(a) The aggregate amount of all refunds approved by the Office of Hearings and Appeals or its designee in a given case shall not exceed the amount to be remitted pursuant to the relevant DOE enforcement order, plus any accumulated interest, reduced by the amount of any administrative costs approved by the Office of Hearings and Appeals. In the event that the aggregate amount of approved claims exceeds the aggregate amount of funds specified above, the Office of Hearings and Appeals may make refunds on a pro rata basis. The Office of Hearings and Appeals may delay payment of any

refunds until all Applications have been processed.

(b) The Office of Hearings and Appeals may decline to consider Applications for refund amounts that, in view of the direct administrative costs involved, are too small to warrant individual consideration.

§ 205.287 Escrow accounts, segregated funds and other guarantees.

(a) In implementing the refund procedures specified in this subpart, the Director of the Office of Hearings and Appeals or his designee shall issue an order providing for the custody of the funds to be tendered pursuant to the Remedial Order or Consent Order. This Order may require placement of the funds in an appropriate interest-bearing escrow account, retention of the funds by the firm in a segregated account under such terms and conditions as are specified by the DOE, or the posting of a sufficient bond or other guarantee to ensure payment.

(b) All costs and charges approved by the Office of Hearings and Appeals and incurred in connection with the processing of Applications for Refund or incurred by an escrow agent shall be paid from the amount of funds, including any accumulated interest, to be remitted pursuant to the Remedial Order or Consent Order.

(c) After the expenses referred to in paragraph (b) of this section have been satisfied and refunds distributed to successful applicants, any remaining funds remitted pursuant to the Remedial Order or Consent Order shall be deposited in the United States Treasury or distributed in any other manner specified in the Decision and Order referred to in § 205.282(c).

(d) Funds contained in an escrow account, segregated fund, or guaranteed by other approved means shall be disbursed only upon written order of the Office of Hearings and Appeals.

§ 205.288 Interim and ancillary orders.

The Director of the Office of Hearings and Appeals or his designee may issue any interim or ancillary orders, or make any rulings or determinations to ensure that refund proceedings, including the actions of the administrator and the custodian of the funds involved in a refund proceeding, are conducted in an appropriate manner and are not unduly delayed.

Subpart W—Electric Power System Permits and Reports; Applications; Administrative Procedures and Sanctions

(Approved by the Office of Management and Budget under Control No. 1901–0245)

AUTHORITY: Department of Energy Organization Act, Pub. L. No. 95–91, 91 Stat. 565 (42 U.S.C. Section 7101). Federal Power Act, Pub. L. 66–280, 41 Stat. 1063 (16 U.S.C. Section 792) *et seq.*, Department of Energy Delegation Order No. 0204–4 (42 FR 60726). E.O. 10485, 18 FR 5397, 3 CFR, 1949–1953, Comp., p. 970 as amended by E.O. 12038, 43 FR 4957, 3 CFR 1978 Comp., p. 136.

SOURCE: 45 FR 71560, Oct. 28, 1980; 46 FR 63209, Dec. 31, 1981, unless otherwise noted.

APPLICATION FOR AUTHORIZATION TO TRANSMIT ELECTRIC ENERGY TO A FOREIGN COUNTRY

§ 205.300 Who shall apply.

(a) An electric utility or other entity subject to DOE jurisdiction under part II of the Federal Power Act who proposes to transmit any electricity from the United States to a foreign country must submit an application or be a party to an application submitted by another entity. The application shall be submitted to the Office of Utility Systems of the Economic Regulatory Administration (EPA).

(b) In connection with an application under §§ 205.300 through 205.309, attention is directed to the provisions of §§ 205.320 through 205.327, below, concerning applications for Presidential Permits for the construction, connection, operation, or maintenance, at the borders of the United States, of facilities for the transmission of electric energy between the United States and a foreign country in compliance with Executive Order 10485, as amended by Executive Order 12038.

§ 205.301 Time of filing.

Each application should be made at least six months in advance of the initiation of the proposed electricity export, except when otherwise permitted

by the ERA to resolve an emergency situation.

§ 205.302 Contents of application.

Every application shall contain the following information set forth in the order indicated below:

(a) The exact legal name of the applicant.

(b) The exact legal name of all partners.

(c) The name, title, post office address, and telephone number of the person to whom correspondence in regard to the application shall be addressed.

(d) The state or territory under the laws of which the applicant is organized or incorporated, or authorized to operate. If the applicant is authorized to operate in more than one state, all pertinent facts shall be included.

(e) The name and address of any known Federal, State or local government agency which may have any jurisdiction over the action to be taken in this application and a brief description of that authority.

(f) A description of the transmission facilities through which the electric energy will be delivered to the foreign country, including the name of the owners and the location of any remote facilities.

(g) A technical discussion of the proposed electricity export's reliability, fuel use and system stability impact on the applicant's present and prospective electric power supply system. Applicant must explain why the proposed electricity export will not impair the sufficiency of electric supply on its system and why the export will not impede or tend to impede the regional coordination of electric utility planning or operation.

(h) The original application shall be signed and verified under oath by an officer of the applicant having knowledge of the matters set forth therein.

§ 205.303 Required exhibits.

There shall be filed with the application and as a part thereof the following exhibits:

(a) *Exhibit A.* A copy of the agreement or proposed agreement under which the electricity is to be transmitted including a listing of the terms and conditions. If this agreement contains proprietary information that should not be released to the general public, the applicant must identify such data and include a statement explaining why proprietary treatment is appropriate.

(b) *Exhibit B.* A showing, including a signed opinion of counsel, that the proposed export of electricity is within the corporate power of the applicant, and that the applicant has complied or will comply with all pertinent Federal and State laws.

(c) *Exhibit C.* A general map showing the applicant's overall electric system and a detailed map highlighting the location of the facilities or the proposed facilities to be used for the generation and transmission of the electric energy to be exported. The detailed map shall identify the location of the proposed border crossing point(s) or power transfer point(s) by Presidential Permit number whenever possible.

(d) *Exhibit D.* If an applicant resides or has its principal office outside the United States, such applicant shall designate, by irrevocable power of attorney, an agent residing within the United States. A verified copy of such power of attorney shall be furnished with the application.

(e) *Exhibit E.* A statement of any corporate relationship or existing contract between the applicant and any other person, corporation, or foreign government, which in any way relates to the control or fixing of rates for the purchase, sale or transmission of electric energy.

(f) *Exhibit F.* An explanation of the methodology (Operating Procedures) to inform neighboring electric utilities in the United States of the available capacity and energy which may be in excess of the applicant's requirements before delivery of such capacity to the foreign purchaser. Approved firm export, diversity exchange and emergency exports are exempted from this requirement. Those materials required by this section which have been filed previously with the ERA may be incorporated by reference.

§ 205.304 Other information.

Where the application is for authority to export less than 1,000,000 kilowatt hours annually, applicants need

not furnish the information called for in §§ 205.302(g) and 205.303 (Exhibit C). Applicants, regardless of the amount of electric energy to be exported, may be required to furnish such supplemental information as the ERA may deem pertinent.

§ 205.305 Transferability.

(a) An authorization to transmit electric energy from the United States to a foreign country granted by order of the ERA under section 202(e) of the Federal Power Act shall not be transferable or assignable. Provided written notice is given to the ERA within 30 days, the authorization may continue in effect temporarily in the event of the involuntary transfer of this authority by operation of law (including transfers to receivers, trustees, or purchasers under foreclosure or judicial sale). This continuance is contingent on the filing of an application for permanent authorization and may be effective until a decision is made thereon.

(b) In the event of a proposed voluntary transfer of this authority to export electricity, the transferee and the transferor shall file jointly an application pursuant to this subsection, setting forth such information as required by §§ 205.300 through 205.304, together with a statement of reasons for the transfer.

(c) The ERA may at any time subsequent to the original order of authorization, after opportunity for hearing, issue such supplemental orders as it may find necessary or appropriate.

§ 205.306 Authorization not exclusive.

No authorization granted pursuant to section 202(e) of the Act shall be deemed to prevent an authorization from being granted to any other person or entity to export electric energy or to prevent any other person or entity from making application for an export authorization.

§ 205.307 Form and style; number of copies

An original and two conformed copies of an application containing the information required under §§ 205.300 through 205.309 must be filed.

§ 205.308 Filing schedule and annual reports.

(a) Persons authorized to transmit electric energy from the United States shall promptly file all supplements, notices of succession in ownership or operation, notices of cancellation, and certificates of concurrence. In general, these documents should be filed at least 30 days prior to the effective date of any change.

(b) A change in the tariff arrangement does not require an amendment to the authorization. However, any entity with an authorization to export electric energy shall file with the ERA, and the appropriate state regulatory agency, a certified copy of any changed rate schedule and terms. Such changes may take effect upon the date of filing of informational data with the ERA.

(c) Persons receiving authorization to transmit electric energy from the United States shall submit to the ERA, by February 15 each year, a report covering each month of the preceding calendar year detailing the gross amount of kilowatt-hours of energy, by authorized category, received or delivered, and the cost and revenue associated with each category.

(Approved by the Office of Management and Budget under Control No. 1901–0245)

[45 FR 71560, Oct. 28, 1980, as amended at 46 FR 63209, Dec. 31, 1981]

§ 205.309 Filing procedures and fees.

Applications shall be addressed to the Office of Utility Systems of the Economic Regulatory Administration. Every application shall be accompanied by a fee of $500.00. Fee payment shall be by check, draft, or money order payable to the Treasurer of the United States. Copies of applications and notifications of rate changes shall be furnished to the Federal Energy Regulatory Commission and all affected State public utility regulatory agencies.

APPLICATION FOR PRESIDENTIAL PERMIT AUTHORIZING THE CONSTRUCTION, CONNECTION, OPERATION, AND MAINTENANCE OF FACILITIES FOR TRANSMISSION OF ELECTRIC ENERGY AT INTERNATIONAL BOUNDARIES

§ 205.320 Who shall apply.

(a) Any person, firm, co-operative, corporation or other entity who operates an electric power transmission or distribution facility crossing the border of the United States, for the transmission of electric energy between the United States and a foreign country, shall have a Presidential Permit, in compliance with Executive Order 10485, as amended by Executive Order 12038. Such applications should be filed with the Office of Utility Systems of the Economic Regulatory Administration.

NOTE: E.O. 12038, dated February 3, 1978, amended E.O. 10485, dated September 3, 1953, to delete the words ''Federal Power Commission'' and ''Commission'' and substitute for each ''Secretary of Energy.'' E.O. 10485 revoked and superseded E.O. 8202, dated July 13, 1939.

(b) In connection with applications hereunder, attention is directed to the provisions of §§ 205.300 to 205.309, above, concerning applications for authorization to transmit electric energy from the United States to a foreign country pursuant to section 202(e) of the Federal Power Act.

§ 205.321 Time of filing.

Pursuant to the DOE's responsibility under the National Environmental Policy Act, the DOE must make an environmental determination of the proposed action. If, as a result of this determination, an environmental impact statement (EIS) must be prepared, the permit processing time normally will be 18–24 months. If no environmental impact statement is required, then a six-month processing time normally would be sufficient.

§ 205.322 Contents of application.

Every application shall be accompanied by a fee prescribed in § 205.326 of this subpart and shall provide, in the order indicated, the following:

(a) *Information regarding the applicant.* (1) The legal name of the applicant;

(2) The legal name of all partners;

(3) The name, title, post office address, and telephone number of the person to whom correspondence in regard to the application shall be addressed;

(4) Whether the applicant or its transmission lines are owned wholly or in part by a foreign government or directly or indirectly assisted by a foreign government or instrumentality thereof; or whether the applicant has any agreement pertaining to such ownership by or assistance from any foreign government or instrumentality thereof.

(5) List all existing contracts that the applicant has with any foreign government, or any foreign private concerns, relating to any purchase, sale or delivery of electric energy.

(6) A showing, including a signed opinion of counsel, that the construction, connection, operation, or maintenance of the proposed facility is within the corporate power of the applicant, and that the applicant has complied with or will comply with all pertinent Federal and State laws;

(b) *Information regarding the transmission lines to be covered by the Presidential Permit.* (1)(i) A technical description providing the following information: (A) Number of circuits, with identification as to whether the circuit is overhead or underground; (B) the operating voltage and frequency; and (C) conductor size, type and number of conductors per phase.

(ii) If the proposed interconnection is an overhead line the following additional information must also be provided: (A) The wind and ice loading design parameters; (B) a full description and drawing of a typical supporting structure including strength specifications; (C) structure spacing with typical ruling and maximum spans; (D) conductor (phase) spacing; and (E) the designed line to ground and conductor side clearances.

(iii) If an underground or underwater interconnection is proposed, the following additional information must also be provided: (A) Burial depth; (B) type of cable and a description of any required supporting equipment, such as insulation medium pressurizing or forced cooling; and (C) cathodic protection scheme. Technical diagrams which

provide clarification of any of the above items should be included.

(2) A general area map with a scale not greater than 1 inch=40 kilometers (1 inch=25 miles) showing the overall system, and a detailed map at a scale of 1 inch=8 kilometers (1 inch=5 miles) showing the physical location, longitude and latitude of the facility on the international border. The map shall indicate ownership of the facilities at or on each side of the border between the United States and the foreign country. The maps, plans, and description of the facilities shall distinguish the facilities or parts thereof already constructed from those to be constructed.

(3) Applications for the bulk power supply facility which is proposed to be operated at 138 kilovolts or higher shall contain the following bulk power system information:

(i) Data regarding the expected power transfer capability, using normal and short time emergency conductor ratings;

(ii) System power flow plots for the applicant's service area for heavy summer and light spring load periods, with and without the proposed international interconnection, for the year the line is scheduled to be placed in service and for the fifth year thereafter. The power flow plots submitted can be in the format customarily used by the utility, but the ERA requires a detailed legend to be included with the power flow plots;

(iii) Data on the line design features for minimizing television and/or radio interference caused by operation of the subject transmission facilities;

(iv) A description of the relay protection scheme, including equipment and proposed functional devices;

(v) After receipt of the system power flow plots, the ERA may require the applicant to furnish system stability analysis for the applicant's system.

(c) Information regarding the environmental impacts shall be provided as follows for each routing alternative:

(1) Statement of the environmental impacts of the proposed facilities including a list of each flood plain, wetland, critical wildlife habitat, navigable waterway crossing, Indian land, or historic site which may be impacted by the proposed facility with a description of proposed activities therein.

(2) A list of any known Historic Places, as specified in 36 CFR part 800, which may be eligible for the National Register of Historic Places.

(3) Details regarding the minimum right-of-way width for construction, operation and maintenance of the transmission lines and the rationale for selecting that right-of-way width.

(4) A list of threatened or endangered wildlife or plant life which may be located in the proposed alternative.

(d) A brief description of all practical alternatives to the proposed facility and a discussion of the general environmental impacts of each alternative.

(e) The original of each application shall be signed and verified under oath by an officer of the applicant, having knowledge of the matters therein set forth.

§ 205.323 Transferability.

(a) Neither a permit issued by the ERA pursuant to Executive Order 10485, as amended, nor the facility shall be transferable or assignable. Provided written notice is given to the ERA within 30 days, the authorization may continue in effect temporarily in the event of the involuntary transfer of the facility by operation of law (including transfers to receivers, trustees, or purchases under foreclosure or judicial sale). This continuance is contingent on the filing of an application for a new permit and may be effective until a decision is made thereon.

(b) In the event of a proposed voluntary transfer of the facility, the permittee and the party to whom the transfer would be made shall file a joint application with the ERA pursuant to this paragraph, setting forth information as required by § 205.320 *et seq.*, together with a statement of reasons for the transfer. The application shall be accompanied by a filing fee pursuant to § 205.326.

(c) No substantial change shall be made in any facility authorized by permit or in the operation thereof unless or until such change has been approved by the ERA.

(d) Permits may be modified or revoked without notice by the President

of the United States, or by the Administrator of the ERA after public notice.

§ 205.324 Form and style; number of copies.

All applicants shall file an original and two conformed copies of the application and all accompanying documents required under §§ 205.320 through 205.327.

§ 205.325 Annual report.

Persons receiving permits to construct, connect, operate or maintain electric transmission facilities at international boundaries shall submit to the ERA, by February 15 each year, a report covering each month of the preceding calendar year, detailing by category the gross amount of kilowatt-hours of energy received or delivered and the cost and revenue associated with each category.

§ 205.326 Filing procedures and fees.

Applications shall be forwarded to the Office of Utility Systems of the Economic Regulatory Administration and shall be accompanied by a filing fee of $150. The application fee will be charged irrespective of the ERA's disposition of the application. Fee payment shall be by check, draft, or money order payable to the Treasurer of the United States. Copies of applications shall be furnished to the Federal Energy Regulatory Commission and all affected State public utility regulatory agencies.

§ 205.327 Other information.

The applicant may be required after filing the application to furnish such supplemental information as the ERA may deem pertinent. Such requests shall be written and a prompt response will be expected. Protest regarding the supplying of such information should be directed to the Administrator of the ERA.

§ 205.328 Environmental requirements for Presidential Permits—Alternative 1.

(a) *NEPA Compliance.* Except as provided in paragraphs (c) and (e) of this section, when an applicant seeks a Presidential Permit, such applicant will be responsible for the costs of preparing any necessary environmental document, including an Environmental Impact Statement (EIS), arising from ERA's obligation to comply with the National Environmental Policy Act of 1969 (NEPA). ERA will determine whether an environmental assessment (EA) or EIS is required within 45 days of the receipt of the Presidential Permit application and of environmental information submitted pursuant to 10 CFR 205.322 (c) and (d). ERA will use these and other sources of information as the basis for making the environmental determination:

(1) If an EIS is determined to be necessary, the applicant shall enter into a contract with an independent third party, which may be a Government-owned, contractor-operated National Laboratory, or a qualified private entity selected by ERA. The third party contractor must be qualified to conduct an environmental review and prepare an EIS, as appropriate, under the supervision of ERA, and may not have a financial or other interest in the outcome of the proceedings. The NEPA process must be completed and approved before ERA will issue a Presidential Permit.

(2) If an EA is determined to be necessary, the applicant may be permitted to prepare an environmental assessment pursuant to 10 CFR 1506.5(b) for review and adoption by ERA, or the applicant may enter into a third party contract as set forth in this section.

(b) *Environmental Review Procedure.* Except as provided in paragraphs (c) and (e) of this section, environmental documents, including the EIS, where necessary, will be prepared utilizing the process set forth above. ERA, the applicant, and the independent third party, which may be a Government-owned, contractor-operated National Laboratory or a private entity, shall enter into an agreement in which the applicant will engage and pay directly for the services of the qualified third party to prepare the necessary environmental documents. The agreement shall outline the responsibilities of each party and its relationship to the other two parties regarding the work to be done or supervised. ERA shall approve the information to be developed and supervise the gathering, analysis

and presentation of the information. In addition, ERA will have the authority to approve and modify any statement, analysis, and conclusion contained in the environmental documents prepared by the third party. Before commencing preparation of the environmental document the third party will execute an ERA-prepared disclosure document stating that it does not have any conflict of interest, financial or otherwise, in the outcome of either the environmental process or the Permit application.

(c) *Financial Hardship*. Whenever ERA determines that a project is no longer economically feasible, or that a substantial financial burden would be imposed by the applicant bearing all of the costs of the NEPA studies, ERA may waive the requirement set forth in paragraphs (a) and (b) of this section and perform the necessary environmental review, completely or in part, with its own resources.

(d) *Discussions Prior to Filing*. Prior to the preparation of any Presidential Permit application and environmental report, a potential applicant is encouraged to contact ERA and each affected State public utility regulatory agency to discuss the scope of the proposed project and the potential for joint State and Federal environmental review.

(e) *Federal Exemption*. Upon a showing by the applicant that it is engaged in the transaction of official business of the Federal Government in filing the application pursuant to 10 CFR 205.320 *et seq.*, it will be exempt from the requirements of this section.

[48 FR 33819, July 25, 1983]

§ 205.329 Environmental requirements for Presidential Permits—Alternative 2.

(a) *NEPA Compliance*. Except as provided in paragraph (b) and (e) of this section, applicants seeking Presidential Permits will be financially responsible for the expenses of any contractor chosen by ERA to prepare any necessary environmental document arising from ERA's obligation to comply with the National Environmental Policy Act of 1969 (NEPA) in issuing such Presidential Permits:

(1) ERA will determine whether an Environmental Impact Statement (EIS) or an Environmental Assessment (EA) is required within 45 days of receipt of the Presidential Permit application and of the environmental information submitted pursuant to 10 CFR 205.322 (c) and (d). ERA will use these and other sources of information as the basis for making the environmental determination.

(2) If an EIS is determined to be necessary, ERA will notify the applicant of the fee for completing the EIS within 90 days after the submission of the application and environmental information. The fee shall be based on the expenses estimated to be incurred by DOE in contracting to prepare the EIS (*i.e.*, the estimated fee charges to ERA by the contractor). DOE employee salaries and other fixed costs, as set forth in OMB Circular A–25, shall not be included in the applicant's fee. Fee payment shall be by check, draft, or money order payable to the Treasurer of the United States, and shall be submitted to ERA. Upon submission of fifty percent of the environmental fee, ERA will provide to the applicant a tentative schedule for completion of the EIS.

(3) If an EA is determined to be necessary, the applicant may be permitted to prepare an environmental assessment pursuant to 40 CFR 1506.5(b) for review and adoption by ERA, or the applicant may choose to have ERA prepare the EA pursuant to the fee procedures set forth above.

(4) The NEPA process must be completed and approved before ERA will issue a Presidential Permit.

(b) *Financial Hardship*. Whenever ERA determines that a project is no longer economically feasible, or that a substantial financial burden would be imposed by the applicant bearing all of the costs of the NEPA studies, ERA may waive the requirement set forth in paragraphs (a) and (b) of this section and perform the necessary environmental review, completely or in part, with its own resources.

(c) *Discussions Prior to Filing*. Prior to the preparation of any Presidential Permit application and environmental

assessment, a potential applicant is encouraged to contact ERA and each affected State public utility regulatory agency to discuss the scope of the proposed project and the potential for joint State and Federal environmental review.

(d) *Fee Payment*. The applicant shall make fee payment for completing the EIS to ERA in the following manner:

(1) 50 percent of the total amount due to be paid within 30 days of receipt of the fee information from DOE;

(2) 25 percent to be paid upon publication of the draft EIS; and

(3) 25 percent to be paid upon publication of the final EIS.

If costs are less than the amount collected, ERA will refund to the applicant the excess fee collected. If costs exceed the initial fee, ERA will fund the balance, unless the increase in costs is caused by actions or inactions of the applicant, such as the applicant's failure to submit necessary environmental information in a timely fashion. If the application is withdrawn at any stage prior to issuance of the final EIS, the fee will be adjusted to reflect the costs actually incurred; payment shall be made by the applicant within 30 days of above referenced events.

(e) *Federal Exemption*. Upon a showing by the applicant that it is engaged in the transaction of official business of the Federal Government in filing an application pursuant to 10 CFR 205.320 *et seq.*, it will be exempt from the requirements of this section.

[48 FR 33820, July 25, 1983]

REPORT OF MAJOR ELECTRIC UTILITY SYSTEM EMERGENCIES

AUTHORITY: Department of Energy Organization Act, Pub. L. 95–91 (42 U.S.C. 7101); Federal Power Act, Pub. L. 66–280 (16 U.S.C. 791 *et seq.*)

SOURCE: Sections 205.350 through 205.353 appear at 51 FR 39745, Oct. 31, 1986, unless otherwise noted.

§ 205.350 General purpose.

The purpose of this rule is to establish a procedure for the Office of International Affairs and Energy Emergencies (IE) to obtain current information regarding emergency situations on the electric energy supply systems in the United States so that appropriate Federal emergency response measures can be implemented in a timely and effective manner. The data also may be utilized in developing legislative recommendations and reports to the Congress.

(Approved by the Office of Management and Budget under control number 1901–0288)

§ 205.351 Reporting requirements.

For the purpose of this section, a report or a part of a report may be made jointly by two or more entities. Every electric utility or other entity engaged in the generation, transmission or distribution of electric energy for delivery and/or sale to the public shall report promptly, through the DOE Emergency Operations Center, by telephone, the occurrence of any event such as described in paragraphs (a) through (d) of this section. These reporting procedures are mandatory. Entities that fail to comply within 24 hours will be contacted and reminded of their reporting obligation.

(a) *Loss of Firm System Loads*, caused by:

(1) Any load shedding actions resulting in the reduction of over 100 megawatts (MW) of *firm* customer load for reasons of maintaining the *continuity* of the bulk electric power supply system.

(2) Equipment failures/system operational actions attributable to the loss of *firm* system loads for a period in excess of 15 minutes, as described below:

(i) Reports from entities with a previous year recorded peak load of over 3000 MW are required for all such losses of *firm* loads which total over 300 MW.

(ii) Reports from all other entities are required for all such losses of *firm* loads which total over 200 MW or 50 percent of the system load being supplied immediately prior to the incident, whichever is less.

(3) Other events or occurrences which result in a continuous interruption for 3 hours or longer to over 50,000 customers, or more than 50 percent of the total customers being served immediately prior to the interruption, whichever is less.

(b) *Voltage Reductions or Public Appeals:*

(1) Reports are required for any anticipated or actual system voltage reductions of 3 percent or greater for purposes of maintaining the *continuity* of the bulk electric power supply system.

(2) Reports are required for any issuance of a public appeal to reduce the use of electricity for purposes of maintaining the *continuity* of the bulk electric power system.

(c) *Vulnerabilities that could Impact System Reliability:*

(1) Reports are required for any actual or suspected act(s) of physical sabotage (not vandalism) or terrorism directed at an electric power supply system, local or regional, in an attempt to either:

(i) Disrupt or degrade the service reliability of the local or regional bulk electric power supply system, or

(ii) Disrupt, degrade, or deny bulk electric power service to:

(A) A specific facility (industrial, military, governmental, private), or

(B) A specific service (transportation, communications), or

(C) A specific locality (town, city, county).

(2) Reports are required for any abnormal emergency system operating condition(s) or other event(s) which in the judgment of the reporting entity could or would constitute a hazard to maintaining the *continuity* of the bulk electric power supply system. Examples will be provided in the DOE pamphlet on reporting procedures.

(d) *Fuel Supply Emergencies:*

(1) Reports are required for any anticipated or existing fuel supply emergency situation which would threaten the *continuity* of the bulk electric power supply system, such as:

(i) Fuel stocks or hydro project water storage levels are at 50 percent (or less) of normal for that time of the year, and a continued downward trend is projected.

(ii) Unscheduled emergency generation is dispatched causing an abnormal use of a particular fuel type, such that the future supply or stocks of that fuel could reach a level which threatens the reliability or adequacy of electric service.

(Approved by the Office of Management and Budget under control number 1901–0288)

§ 205.352 Information to be reported.

The emergency situation data shall be supplied to the DOE Emergency Operations Center in accordance with the current DOE pamphlet on reporting procedures. The initial report shall include the utility name; the area affected; the time of occurrence of the initiating event; the duration or an estimate of the likely duration; an estimate of the number of customers and amount of load involved; and whether any known critical services such as hospitals, military installations, pumping stations or air traffic control systems, were or are interrupted. To the extent known or reasonably suspected, the report shall include a description of the events initiating the disturbance. The DOE may require further clarification during or after restoration of service.

(Approved by the Office of Management and Budget under control number 1901–0288)

§ 205.353 Special investigation and reports.

If directed by the Director, Office of Energy Emergency Operations in writing and noticed in the FEDERAL REGISTER, a utility or other subject entity experiencing a condition described in § 205.351 above shall submit a full report of the technical circumstances surrounding a specific power system disturbance, including the restoration procedures utilized. The report shall be filed at such times as may be directed by the Director, Office of Energy Emergency Operations.

(Approved by the Office of Management and Budget under control number 1901–0288)

EMERGENCY INTERCONNECTION OF ELECTRIC FACILITIES AND THE TRANSFER OF ELECTRICITY TO ALLEVIATE AN EMERGENCY SHORTAGE OF ELECTRIC POWER

AUTHORITY: Department of Energy Organization Act, Pub. L. 95–91, 91 Stat. 565 (42 U.S.C. 7101). Federal Power Act, Pub. L. 66–280, 41 Stat. 1063 (16 U.S.C. 791(a))

SOURCE: Sections 205.370 through 205.379 appear at 46 FR 39987, Aug. 6, 1981, unless otherwise noted.

§ 205.370 Applicability.

Sections 202(c) and 202(d) of the Federal Power Act are applicable to any ''entity'' which owns or operates electric power generation, transmission or distribution facilities. An ''entity'' is a private or public corporation (utility), a governmental agency, a municipality, a cooperative or a lawful association of the foregoing. Under this section, the DOE has the authority to order the temporary connection of facilities, or the generation or delivery of electricity, which it deems necessary to alleviate an emergency. Such orders shall be effective for the time specified and will be subject to the terms and conditions the DOE specifies. The DOE retains the right to cancel, modify or otherwise change any order, with or without notice, hearing, or report. Requests for action under these regulations will be accepted from any ''entity,'' State Public Utility Commission, State Energy Agency, or State Governor. Actions under these regulations also may be initiated by the DOE on its own motion. Orders under this authority may be made effective without prior notice.

§ 205.371 Definition of emergency.

''Emergency,'' as used herein, is defined as an unexpected inadequate supply of electric energy which may result from the unexpected outage or breakdown of facilities for the generation, transmission or distribution of electric power. Such events may be the result of weather conditions, acts of God, or unforeseen occurrences not reasonably within the power of the affected ''entity'' to prevent. An emergency also can result from a sudden increase in customer demand, an inability to obtain adequate amounts of the necessary fuels to generate electricity, or a regulatory action which prohibits the use of certain electric power supply facilities. Actions under this authority are envisioned as meeting a specific inadequate power supply situation. Extended periods of insufficient power supply as a result of inadequate planning or the failure to construct necessary facilities can result in an emergency as contemplated in these regulations. In such cases, the impacted ''entity'' will be expected to make firm arrangements to resolve the problem until new facilities become available, so that a continuing emergency order is not needed. Situations where a shortage of electric energy is projected due solely to the failure of parties to agree to terms, conditions or other economic factors relating to service, generally will not be considered as emergencies unless the inability to supply electric service is imminent. Where an electricity outage or service inadequacy qualifies for a section 202(c) order, contractual difficulties alone will not be sufficient to preclude the issuance of an emergency order.

§ 205.372 Filing procedures; number of copies.

An original and two conformed copies of the applications and reports required under §§ 205.370 through 205.379 shall be filed with the Division of Power Supply and Reliability, Department of Energy. Copies of all documents also shall be served on:

(a) The Federal Energy Regulatory Commission;

(b) Any State Regulatory Agency having responsibility for service standards, or rates of the ''entities'' that are affected by the requested order;

(c) Each ''entity'' suggested as a potential source for the requested emergency assistance;

(d) Any ''entity'' that may be a potential supplier of transmission services;

(e) All other ''entities'' not covered under paragraphs (c) and (d) of this section which may be directly affected by the requested order; and

(f) The appropriate Regional Reliability Council.

§ 205.373 Application procedures.

Every application for an emergency order shall set forth the following information as required. This information shall be considered by the DOE in determining that an emergency exists and in deciding to issue an order pursuant to sections 202(c) and 202(d) of the Federal Power Act.

(a) The exact legal name of the applicant and of all other ''entities'' named in the application.

(b) The name, title, post office address, and telephone number of the person to whom correspondence in regard to the application shall be addressed.

(c) The political subdivision in which each ''entity'' named in the application operates, together with a brief description of the area served and the business conducted in each location.

(d) Each application for a section 202(c) order shall include the following baseline data:

(1) Daily peak load and energy requirements for each of the past 30 days and projections for each day of the expected duration of the emergency;

(2) All capacity and energy receipts or deliveries to other electric utilities for each of the past 30 days, indicating the classification for each transaction;

(3) The status of all interruptible customers for each of the past 30 days and the anticipated status of these customers for each day of the expected duration of the emergency, assuming both the granting and the denial of the relief requested herein;

(4) All scheduled capacity and energy receipts or deliveries to other electric utilities for each day of the expected duration of the emergency.

(e) A description of the situation and a discussion of why this is an emergency, including any necessary background information. This should include any contingency plan of the applicant and the current level of implementation.

(f) A showing that adequate electric service to firm customers cannot be maintained without additional power transfers.

(g) A description of any conservation or load reduction actions that have been implemented. A discussion of the achieved or expected results or these actions should be included.

(h) A description of efforts made to obtain additional power through voluntary means and the results of such efforts; and a showing that the potential sources of power and/or transmission services designated pursuant to paragraphs (i) through (k) of this section informed that the applicant believed that an emergency existed within the meaning of § 205.371.

(i) A listing of proposed sources and amounts of power necessary from each source to alleviate the emergency and a listing of any other ''entities'' that may be directly affected by the requested order.

(j) Specific proposals to compensate the supplying ''entities'' for the emergency services requested and to compensate any transmitting ''entities'' for services necessary to deliver such power.

(k) A showing that, to the best of the applicant's knowledge, the requested relief will not unreasonably impair the reliability of any ''entity'' directly affected by the requested order to render adequate service to its customers.

(l) Description of the facilities to be used to transfer the requested emergency service to the applicant's system.

(1) If a temporary interconnection under the provisions of section 202(c) is proposed independently, the following additional information shall be supplied for each such interconnection:

(i) Proposed location;

(ii) Required thermal capacity or power transfer capability of the interconnection;

(iii) Type of emergency services requested, including anticipated duration;

(iv) An electrical one line diagram;

(v) A description of all necessary materials and equipment; and

(vi) The projected length of time necessary to complete the interconnection.

(2) If the requested emergency assistance is to be supplied over existing facilities, the following information shall be supplied for each existing interconnection:

(i) Location;

(ii) Thermal capacity of power transfer capability of interconnection facilities; and

(iii) Type and duration of emergency services requested.

(m) A general or key map on a scale not greater than 100 kilometers to the centimeter showing, in separate colors, the territory serviced by each ''entity'' named in the application; the location of the facilities to be used for the generation and transmission of the requested emergency service; and all connection points between systems.

(n) An estimate of the construction costs of any proposed temporary facilities and a statement estimating the expected operation and maintenance costs on an annualized basis. (Not required on section 202(d) applications.)

(o) Applicants may be required to furnish such supplemental information as the DOE may deem pertinent.

§ 205.374 Responses from "entities" designated in the application.

Each ''entity'' designated as a potential source of emergency assistance or as a potential supplier of transmission services and which has received a copy of the application under § 205.373, shall have three (3) calendar days from the time of receipt of the application to file the information designated below with the DOE. The DOE will grant extensions of the filing period when appropriate. The designated ''entities'' shall provide an analysis of the impact the requested action would have on its system reliability and its ability to supply its own interruptible and firm customers. The effects of the requested action on the ability to serve firm loads shall be clearly distinguished from the ability to serve contractually interruptible loads. The designated ''entity'' also may provide other information relevant to the requested action, which is not included in the reliability analysis. Copies of any response shall be provided to the applicant, the Federal Energy Regulatory Commission, any State Regulatory Agency having responsibility for service standards or rates of any ''entity'' that may be directly involved in the proposed action, and the appropriate Regional Electric Reliability Council. Pursuant to section 202(c) of the Federal Power Act, DOE may issue an emergency order even though a designated ''entity'' has failed to file a timely response.

§ 205.375 Guidelines defining inadequate fuel or energy supply.

An inadequate utility system fuel inventory or energy supply is a matter of managerial and engineering judgment based on such factors as fuels in stock, fuels en route, transportation time, and constraints on available storage facilities. A system may be considered to have an inadequate fuel or energy supply capability when, combined with other conditions, the projected energy deficiency upon the applicant's system without emergency action by the DOE, will equal or exceed 10 percent of the applicant's then normal daily net energy for load, or will cause the applicant to be unable to meet its normal peak load requirements based upon use of all of its otherwise available resources so that it is unable to supply adequate electric service to its ultimate customers. The following conditions will be considered in determining that a system has inadequate fuel or energy supply capability:

(1) System coal stocks are reduced to 30 days (or less) of normal burn days and a continued downward trend in stock is projected;

(2) System residual oil stocks are reduced to 15 days (or less) of normal burn days and a continued downward trend in stocks is projected;

(3) System distillate oil stocks which cannot be replaced by alternate fuels are reduced to 15 days (or less) of normal burn days and a continued downward trend in stocks is projected;

(4) System natural gas deliveries which cannot be replaced by alternate fuels have been or will be reduced 20 percent below normal requirements and no improvement in natural gas deliveries is projected within 30 days;

(5) Delays in nuclear fuel deliveries will extend a scheduled refueling shutdown by more than 30 days; and

(6) Water supplies required for power generation have been reduced to the level where the future adequacy of the power supply may be endangered and no near term improvement in water supplies is projected.

The use of the prescribed criteria does not preclude an applicant from claiming the existence of an emergency when its stocks of fuel or water exceed the amounts and time frames specified above.

§ 205.376 Rates and charges.

The applicant and the generating or transmitting systems from which emergency service is requested are encouraged to utilize the rates and charges contained in approved existing rate schedules or to negotiate mutually satisfactory rates for the proposed

transactions. In the event that the DOE determines that an emergency exists under section 202(c), and the ''entities'' are unable to agree on the rates to be charged, the DOE shall prescribe the conditions of service and refer the rate issues to the Federal Energy Regulatory Commission for determination by that agency in accordance with its standards and procedures.

§ 205.377 Reports.

In addition to the information specified below, the DOE may require additional reports as it deems necessary.

(a) Where the DOE has authorized the temporary connection of transmission facilities, all ''entities'' whose transmission facilities are thus temporarily interconnected shall report the following information to the DOE within 15 days following completion of the interconnection:

(1) The date the temporary interconnection was completed;

(2) The location of the interconnection;

(3) A description of the interconnection; and

(4) A one-line electric diagram of the interconnection.

(b) Where the DOE orders the transfer of power, the ''entity'' receiving such service shall report the following information to the DOE by the 10th of each month for the preceding month's activity for as long as such order shall remain in effect:

(1) Amounts of capacity and/or energy received each day;

(2) The name of the supplier;

(3) The name of any ''entity'' supplying transmission services; and

(4) Preliminary estimates of the associated costs.

(c) Where the DOE has approved the installation of permanent facilities that will be used only during emergencies, any use of such facilities shall be reported to the DOE within 24 hours. Details of such usage shall be furnished as deemed appropriate by the DOE after such notification.

(d) Any substantial change in the information provided under § 205.373 shall be promptly reported to the DOE.

(Approved by the Office of Management and Budget under Control No. 1904–0066)

[46 FR 39989, Aug. 6, 1981, as amended at 46 FR 63209, Dec. 31, 1981]

§ 205.378 Disconnection of temporary facilities.

Upon the termination of any emergency for the mitigation of which the DOE ordered the construction of temporary facilities, such facilities shall be disconnected and any temporary construction removed or otherwise disposed of, unless application is made as provided in § 205.379 for permanent connection for emergency use. This disconnection and removal of temporary facilities shall be accomplished within 30 days of the termination of the emergency unless an extension is granted by the DOE. The DOE shall be notified promptly when such removal of facilities is completed.

§ 205.379 Application for approval of the installation of permanent facilities for emergency use only.

Application for DOE approval of a permanent connection for emergency use only shall conform with the requirements in § 205.373. However, the baseline data specified in § 205.373(d) need not be included in an application made under this section. In addition, the application shall state in full the reasons why such permanent connection for emergency use is in the public interest.

PART 207—COLLECTION OF INFORMATION

Subpart A—Collection of Information Under the Energy Supply and Environmental Coordination Act of 1974

Sec.

207.1 Purpose.
207.2 Definitions.
207.3 Method of collecting energy information under ESECA.
207.4 Confidentiality of energy information.
207.5 Violations.
207.6 Notice of probable violation and remedial order.
207.7 Sanctions.
207.8 Judicial actions.

207.9 Exceptions, exemptions, interpretations, rulings and rulemaking.

AUTHORITY: 15 U.S.C. 787 *et seq.;* 15 U.S.C. 791 *et seq.;* E.O. 11790, 39 FR 23185; 28 U.S.C. 2461 note.

SOURCE: 40 FR 18409, Apr. 28, 1975, unless otherwise noted.

Subpart A—Collection of Information Under the Energy Supply and Environmental Coordination Act of 1974

§ 207.1 Purpose.

The purpose of this subpart is to set forth the manner in which energy information which the Administrator is authorized to obtain by sections 11 (a) and (b) of ESECA will be collected.

§ 207.2 Definitions.

As used in this subpart:

Administrator means the Federal Energy Administrator of his delegate.

Energy information includes all information in whatever form on (1) fuel reserves, exploration, extraction, and energy resources (including petrochemical feedstocks) wherever located; (2) production, distribution, and consumption of energy and fuels, wherever carried on; and (3) matters relating to energy and fuels such as corporate structure and proprietary relationships, costs, prices, capital investment, and assets, and other matters directly related thereto, wherever they exist.

ESECA means the Energy Supply and Environmental Coordination Act of 1974 (Pub. L. 93–319).

EPAA means the Emergency Petroleum Allocation Act of 1973 (Pub. L. 93–159).

DOE means the Department of Energy.

Person means any natural person, corporation, partnership, association, consortium, or any entity organized for a common business purpose, wherever situated, domiciled, or doing business, who directly or through other persons subject to their control does business in any part of the United States.

United States, when used in the geographical sense, means the States, the District of Columbia, Puerto Rico, and the territories and possessions of the United States.

§ 207.3 Method of collecting energy information under ESECA.

(a) Whenever the Administrator determines that:

(1) Certain energy information is necessary to assist in the formulation of energy policy or to carry out the purposes of the ESECA of the EPAA; and

(2) Such energy information is not available to DOE under the authority of statutes other than ESECA or that such energy information should, as a matter of discretion, be collected under the authority of ESECA;

He shall require reports of such information to be submitted to DOE at least every ninety calendar days.

(b) The Administrator may require such reports of any person who is engaged in the production, processing, refining, transportation by pipeline, or distribution (at other than the retail level) of energy resources.

(c) The Administrator may require such reports by rule, order, questionnaire, or such other means as he determines appropriate.

(d) Whenever reports of energy information are requested under this subpart, the rule, order, questionnaire, or other means requesting such reports shall contain (or be accompanied by) a recital that such reports are being requested under the authority of ESECA.

(e) In addition to requiring reports, the Administrator may, at his discretion, in order to obtain energy information under the authority of ESECA:

(1) Sign and issue subpoenas in accordance with the provisions of § 205.8 of this chapter for the attendance and testimony of witnesses and the production of books, records, papers, and other documents;

(2) Require any person, by rule or order, to submit answers in writing to interrogatories, requests for reports or for other information, with such answers or other submissions made within such reasonable period as is specified in the rule or order, and under oath; and

(3) Administer oaths.

Any such subpoena or rule or order shall contain (or be accompanied by) a recital that energy information is requested under the authority of ESECA.

(f) For the purpose of verifying the accuracy of any energy information requested, acquired, or collected by the DOE, the Administrator, or any officer or employee duly designated by him, upon presenting appropriate credentials and a written notice from the Administrator to the owner, operator, or agent in charge, may—

(1) Enter, at reasonable times, any business premise of facility; and

(2) Inspect, at reasonable times and in a reasonable manner, any such premise or facility, inventory and sample any stock of energy resources therein, and examine and copy books, records, papers, or other documents, relating to any such energy information.

Such written notice shall reasonably describe the premise or facility to be inspected, the stock to be inventoried or sampled, or the books, records, papers or other documents to be examined or copied.

§ 207.4 Confidentiality of energy information.

(a) Information obtained by the DOE under authority of ESECA shall be available to the public in accordance with the provisions of part 202 of this chapter. Upon a showing satisfactory to the Administrator by any person that any energy information obtained under this subpart from such person would, if made public, divulge methods or processes entitled to protection as trade secrets or other proprietary information of such person, such information, or portion thereof, shall be deemed confidential in accordance with the provisions of section 1905 of title 18, United States Code; except that such information, or part thereof, shall not be deemed confidential pursuant to that section for purposes of disclosure, upon request, to (1) any delegate of the DOE for the purpose of carrying out ESECA or the EPAA, (2) the Attorney General, the Secretary of the Interior, the Federal Trade Commission, the Federal Power Commission, or the General Accounting Office, when necessary to carry out those agencies' duties and responsibilities under ESECA and other statutes, and (3) the Congress, or any Committee of Congress upon request of the Chairman.

(b) Whenever the Administrator requests reports of energy information under this subpart, he may specify (in the rule, order or questionnaire or other means by which he has requested such reports) the nature of the showing required to be made in order to satisfy DOE that certain energy information contained in such reports warrants confidential treatment in accordance with this section. He shall, to the maximum extent practicable, either before or after requesting reports, by ruling or otherwise, inform respondents providing energy information pursuant to this subpart of whether such information will be made available to the public pursuant to requests under the Freedom of Information Act (5 U.S.C. 552).

§ 207.5 Violations.

Any practice that circumvents or contravenes or results in a circumvention or contravention of the requirements of any provision of this subpart or any order issued pursuant thereto is a violation of the DOE regulations stated in this subpart.

§ 207.6 Notice of probable violation and remedial order.

(a) *Purpose and scope.* (1) This section establishes the procedures for determining the nature and extent of violations of this subpart and the procedures for issuance of a notice of probable violation, a remedial order or a remedial order for immediate compliance.

(2) When the DOE discovers that there is reason to believe a violation of any provision of this subpart, or any order issued thereunder, has occurred, is continuing or is about to occur, the DOE may conduct proceedings to determine the nature and extent of the violation and may issue a remedial order thereafter. The DOE may commence such proceeding by serving a notice of probable violation or by issuing a remedial order for immediate compliance.

(b) *Notice of probable violation.* (1) The DOE may begin a proceeding under this subpart by issuing a notice of probable violation if the DOE has reason to believe that a violation has occurred, is continuing, or is about to occur.

(2) Within 10 days of the service of a notice of probable violation, the person upon whom the notice is served may file a reply with the DOE office that issued the notice of probable violation at the address provided in § 205.12 of this chapter. The DOE may extend the 10-day period for good cause shown.

(3) The reply shall be in writing and signed by the person filing it. The reply shall contain a full and complete statement of all relevant facts pertaining to the act or transaction that is the subject of the notice of probable violation. Such facts shall include a complete statement of the business or other reasons that justify the act or transaction, it appropriate; a detailed description of the act or transaction; and a full discussion of the pertinent provisions and relevant facts reflected in any documents submitted with the reply. Copies of all relevant documents shall be submitted with the reply.

(4) The reply shall include a discussion of all relevant authorities, including, but not limited to, DOE rulings, regulations, interpretations, and decisions on appeals and exceptions relied upon to support the particular position taken.

(5) The reply should indicate whether the person requests or intends to request a conference regarding the notice. Any request not made at the time of the reply shall be made as soon thereafter as possible to insure that the conference is held when it will be most beneficial. A request for a conference must conform to the requirements of subpart M of part 205 of this chapter.

(6) If a person has not filed a reply with the DOE within the 10-day period provided, and the DOE has not extended the 10-day period, the person shall be deemed to have conceded the accuracy of the factual allegations and legal conclusions stated in the notice of probable violation.

(7) If the DOE finds, after the 10-day period provided in § 207.6(b)(2), that no violation has occurred, is continuing, or is about to occur, or that for any reason the issuance of a remedial order would not be appropriate, it shall notify, in writing, the person to whom a notice of probable violation has been issued that the notice is rescinded.

(c) *Remedial order*. (1) If the DOE finds, after the 10-day period provided in § 207.6(b)(2), that a violation has occurred, is continuing, or is about to occur, the DOE may issue a remedial order. The order shall include a written opinion setting forth the relevant facts and the legal basis of the remedial order.

(2) A remedial order issued under this subpart shall be effective upon issuance, in accordance with its terms, until stayed, suspended, modified or rescinded. The DOE may stay, suspend, modify or rescind a remedial order on its own initiative or upon application by the person to whom the remedial order is issued. Such action and application shall be in accordance with the procedures for such proceedings provided for in part 205 of this chapter.

(3) A remedial order may be referred at any time to the Department of Justice for appropriate action in accordance with § 207.7.

(d) *Remedial order for immediate compliance*. (1) Notwithstanding paragraphs (b) and (c) of this section, the DOE may issue a remedial order for immediate compliance, which shall be effective upon issuance and until rescinded or suspended, if it finds:

(i) There is a strong probability that a violation has occurred, is continuing or is about to occur;

(ii) Irreparable harm will occur unless the violation is remedied immediately; and

(iii) The public interest requires the avoidance of such irreparable harm through immediate compliance and waiver of the procedures afforded under paragraphs (b) and (c) of this section.

(2) A remedial order for immediate compliance shall be served promptly upon the person against whom such order is issued by telex or telegram, with a copy served by registered or certified mail. The copy shall contain a written statement of the relevant facts and the legal basis for the remedial order for immediate compliance, including the findings required by paragraph (d)(1) of this section.

(3) The DOE may rescind or suspend a remedial order for immediate compliance if it appears that the criteria set forth in paragraph (d)(1) of this section

are no longer satisfied. When appropriate, however, such a suspension or rescission may be accompanied by a notice of probable violation issued under paragraph (b) of this section.

(4) If at any time in the course of a proceeding commenced by a notice of probable violation the criteria set forth in paragraph (d)(1) of this section are satisfied, the DOE may issue a remedial order for immediate compliance, even if the 10-day period for reply specified in § 207.6(b)(2) of this part has not expired.

(5) At any time after a remedial order for immediate compliance has become effective the DOE may refer such order to the Department of Justice for appropriate action in accordance with § 207.7 of this part.

(e) *Remedies.* A remedial order or a remedial order for immediate compliance may require the person to whom it is directed to take such action as the DOE determines is necessary to eliminate or to compensate for the effects of a violation.

(f) *Appeal.* (1) No notice of probable violation issued pursuant to this subpart shall be deemed to be an action of which there may be an administrative appeal.

(2) Any person to whom a remedial order or a remedial order for immediate compliance is issued under this subpart may file an appeal with the DOE Office of Exceptions and Appeals in accordance with the procedures for such appeal provided in subpart H of part 205 of this chapter. The appeal must be filed within 10 days of service of the order from which the appeal is taken.

§ 207.7 Sanctions.

(a) *General.* (1) Penalties and sanctions shall be deemed cumulative and not mutually exclusive.

(2) Each day that a violation of the provisions of this subpart or any order issued pursuant thereto continues shall be deemed to constitute a separate violation within the meaning of the provisions of this subpart relating to criminal fines and civil penalties.

(b) *Criminal penalties.* Any person who willfully violates any provision of this subpart or any order issued pursuant thereto shall be subject to a fine of not more than $5,000 for each violation. Criminal violations are prosecuted by the Department of Justice upon referral by the DOE.

(c) *Civil Penalties.* (1) Any person who violates any provision of this subpart or any order issued pursuant thereto shall be subject to a civil penalty of not more than $4,000 for each violation. Actions for civil penalties are prosecuted by the Department of Justice upon referral by the DOE.

(2) When the DOE considers it to be appropriate or advisable, the DOE may compromise and settle, and collect civil penalties.

[40 FR 18409, Apr. 28, 1975, as amended at 62 FR 46183, Sept. 2, 1997; 74 FR 66032, Dec. 14, 2009]

§ 207.8 Judicial actions.

(a) *Enforcement of subpoenas; contempt.* Any United States district court within the jurisdiction of which any inquiry is carried on may, upon petition by the Attorney General at the request of the Administrator, in the case of refusal to obey a subpoena or order of the Administrator issued under this subpart, issue an order requiring compliance. Any failure to obey such an order of the court may be punished by the court as contempt.

(b) *Injunctions.* Whenever it appears to the Administrator that any person has engaged, is engaged, or is about to engage in any act or practice constituting a violation of any regulation or order issued under this subpart, the Administrator may request the Attorney General to bring a civil action in the appropriate district court of the United States to enjoin such acts or practices and, upon a proper showing, a temporary restraining order or preliminary or permanent injunction shall be granted without bond. The relief sought may include a mandatory injunction commanding any person to comply with any provision of such order or regulation, the violation of which is prohibited by section 12(a) of ESECA, as implemented by this subpart.

§ 207.9 Exceptions, exemptions, interpretations, rulings and rulemaking.

Applications for exceptions, exemptions or requests for interpretations relating to this subpart shall be filed in accordance with the procedures provided in subparts D, E and F, respectively, of part 205 of this chapter. Rulings shall be issued in accordance with the procedures of subpart K of part 205 of this chapter. Rulemakings shall be undertaken in accordance with the procedures provided in subpart L of part 205 of this chapter.

PART 209—INTERNATIONAL VOLUNTARY AGREEMENTS

Subpart A—General Provisions

Sec.
209.1 Purpose and scope.
209.2 Delegation.
209.3 Definitions.

Subpart B—Development of Voluntary Agreements

209.21 Purpose and scope.
209.22 Initiation of meetings.
209.23 Conduct of meetings.
209.24 Maintenance of records.

Subpart C—Carrying Out of Voluntary Agreements and Developing and Carrying Out of Plans of Actions

209.31 Purpose and scope.
209.32 Initiation of meetings.
209.33 Conduct of meetings.
209.34 Maintenance of records.

Subpart D—Availability of Information Relating to Meetings and Communications

209.41 Availability of information relating to meetings and communications.

AUTHORITY: Federal Energy Administration Act of 1974, Pub. L. 93–275; E.O. 11790, 39 FR 23185; Energy Policy and Conservation Act, Pub. L. 94–163.

SOURCE: 41 FR 6754, Feb. 13, 1976, unless otherwise noted.

Subpart A—General Provisions

§ 209.1 Purpose and scope.

This part implements the provisions of the Energy Policy and Conservation Act (EPCA) authorizing the Administrator to prescribe standards and procedures by which persons engaged in the business of producing, transporting, refining, distributing, or storing petroleum may develop and carry out voluntary agreements, and plans of action which are required to implement the information and allocation provisions of the International Energy Program (IEP). The requirements of this part do not apply to activities other than those for which section 252 of EPCA makes available a defense to the antitrust laws.

§ 209.2 Delegation.

To the extent otherwise permitted by law, any authority, duty, or responsibility vested in DOE or the Administrator under these regulations may be delegated to any regular full-time employee of the Department of Energy, and, by agreement, to any regular full-time employee of the Department of Justice or the Department of State.

§ 209.3 Definitions.

For purposes of this part—

(a) *Administrator* means the Administrator of the Department of Energy.

(b) *Information and allocation provisions of the International Energy Program* means the provisions of chapter V of the Program relating to the Information System, and the provisions at chapters III and IV thereof relating to the international allocation of petroleum.

(c) *International Energy Agency* (IEA) means the International Energy Agency established by Decision of the Council of the Organization for Economic Cooperation and Development, dated November 15, 1974.

(d) *International Energy Program* (IEP) means the program established pursuant to the Agreement on an International Energy Program signed at Paris on November 18, 1974, including (1) the Annex entitled ''Emergency Reserves'', (2) any amendment to such Agreement which includes another nation as a Party to such Agreement, and (3) any technical or clerical amendment to such Agreement.

(e) *International energy supply emergency* means any period (1) beginning on any date which the President determines allocation of petroleum products to nations participating in the international energy program is required by

chapters III and IV of such program, and (2) ending on a date on which he determines such allocation is no longer required. Such a period shall not exceed 90 days, except where the President establishes one or more additional periods by making the determination under paragraph (e)(1) of this section.

(f) *Potential participant* means any person engaged in the business of producing, transporting, refining, distributing, or storing petroleum products; ''participant'' means any such person who agrees to participate in a voluntary agreement pursuant to a request to do so by the Administrator.

(g) *Petroleum* or *petroleum products* means crude oil, residual fuel oil, or any refined petroleum product (including any natural gas liquid and any natural gas liquid product).

Subpart B—Development of Voluntary Agreements

§ 209.21 Purpose and scope.

(a) This subpart establishes the standards and procedures by which persons engaged in the business of producing, transporting, refining, distributing. or storing petroleum products shall develop voluntary agreements which are required to implement the allocation and information provisions of the International Energy Program.

(b) This subpart does not apply to meetings of bodies created by the International Energy Agency.

§ 209.22 Initiation of meetings.

(a) Any meeting held for the purpose of developing a voluntary agreement involving two or more potential participants shall be initiated and chaired by the Administrator or other regular full-time Federal employee designated by him.

(b) DOE shall provide notice of meetings held pursuant to this subpart, in writing, to the Attorney General, the Federal Trade Commission, and to the Speaker of the House and the President of the Senate for delivery to the appropriate committees of Congress, and to the public through publication in the FEDERAL REGISTER. Such notice shall identify the time, place, and agenda of the meeting, and such other matters as the Administrator deems appropriate. Notice in the FEDERAL REGISTER shall be published at least seven days prior to the date of the meeting.

§ 209.23 Conduct of meetings.

(a) Meetings to develop a voluntary agreement held pursuant to this subpart shall be open to all interested persons. Interested persons desiring to attend meetings under this subpart may be required pursuant to notice to advise the Administrator in advance.

(b) Interested persons may, as set out in notice provided by the Administrator, present data, views, and arguments orally and in writing, subject to such reasonable limitations with respect to the manner of presentation as the Administrator may impose.

§ 209.24 Maintenance of records.

(a) The Administrator shall keep a verbatim transcript of any meeting held pursuant to this subpart.

(b)(1) Except as provided in paragraphs (b) (2) through (4) of this section, potential participants shall keep a full and complete record of any communications (other than in a meeting held pursuant to this subpart) between or among themselves for the purpose of developing a voluntary agreement under this part. When two or more potential participants are involved in such a communication, they may agree among themselves who shall keep such record. Such record shall include the names of the parties to the communication and the organizations, if any, which they represent; the date of the communication; the means of communication; and a description of the communication in sufficient detail to convey adequately its substance.

(2) Where any communication is written (including, but not limited to, telex, telegraphic, telecopied, microfilmed and computer printout material), and where such communication demonstrates on it face that the originator or some other source furnished a copy of the communication to the Office of International Affairs, Department of Energy with the notation ''Voluntary Agreement'' marked on the first page of the document, no participant need record such a communication or send a further copy to the Department of Energy. The Department

of Energy may, upon written notice to potential participants, from time to time, or with reference to particular types of documents, require deposit with other offices or officials of the Department of Energy. Where such communication demonstrates that it was sent to the Office of International Affairs, Department of Energy with the notation ''Voluntary Agreement'' marked on the first page of the document, or such other offices or officials in the Department of Energy has designated pursuant to this section it shall satisfy paragraph (c) of this section, for the purpose of deposit with the Department of Energy.

(3) To the extent that any communication is procedural, administrative or ministerial (for example, if it involves the location of a record, the place of a meeting, travel arrangements, or similar matters), only a brief notation of the date, time, persons involved and description of the communication need be recorded.

(4) To the extent that any communication involves matters which recapitulate matters already contained in a full and complete record, the substance of such matters shall be identified, but need not be recorded in detail, provided that reference is made to the record and the portion thereof in which the substance is fully set out.

(c) Except where the Department of Energy otherwise provides, all records and transcripts prepared pursuant to paragraphs (a) and (b) of this section, shall be deposited within fifteen (15) days after the close of the month of their preparation together with any agreement resulting therefrom, with the Department of Energy, and shall be available to the Department of Justice, the Federal Trade Commission, and the Department of State. Such records and transcripts shall be available for public inspection and copying to the extent set forth in subpart D. Any person depositing material pursuant to this section shall indicate with particularity what portions, if any, the person believes are subject to disclosure to the public pursuant to subpart D and the reasons for such belief.

(d) Any meeting between a potential participant and an official of DOE for the purpose of developing a voluntary agreement shall, if not otherwise required to be recorded pursuant to this section, be recorded by such official as provided in § 204.5.

(Approved by the Office of Management and Budget under Control No. 1905–0079)

(Federal Energy Administration Act of 1974, Pub. L. 93–275, as amended, E.O. 11790, 39 FR 23185; E. O. 11930, 41 FR 32397; Energy Policy and Conservation Act, Pub. L. 94–163; E.O. 11912, 41 FR 15825; Department of Energy Organization Act, Pub. L. 95–91; 91 Stat. 565; E.O. 12009, 42 FR 46267)

[41 FR 6754, Feb. 13, 1976, as amended at 43 FR 12854, Mar. 28, 1978; 46 FR 63209, Dec. 31, 1981]

Subpart C—Carrying Out of Voluntary Agreements and Developing and Carrying Out of Plans of Actions

§ 209.31 Purpose and scope.

This subpart establishes the standards and procedures by which persons engaged in the business of producing, transporting, refining, distributing, or storing petroleum products shall carry out voluntary agreements and develop and carry out plans of action which are required to implement the allocation and information provisions of the International Energy Program.

§ 209.32 Initiation of meetings.

(a) Except for meetings of bodies created by the International Energy Agency, any meeting among participants in a voluntary agreement pursuant to this subpart, for the purpose of carrying out such voluntary agreement or developing or carrying out a plan of action pursuant thereto, shall be initiated and chaired by a full-time Federal employee designated by the Administrator.

(b) Except as provided in paragraph (c) of this section, the Administrator shall provide notice of meetings held pursuant to this subpart, in writing, to the Attorney General, the Federal Trade Commission, and to the Speaker of the House and the President of the Senate for delivery to the appropriate committees of Congress. Except during an international energy supply emergency, notice shall also be provided to the public through publication in the

FEDERAL REGISTER. Such notice shall identify the time, place, and agenda of the meeting. Notice in the FEDERAL REGISTER shall be published at least seven days prior to the date of the meeting unless emergency circumstances, IEP requirements or other unanticipated circumstances require the period to be shortened.

(c) During an international energy supply emergency, advance notice shall be given to the Attorney General, the Federal Trade Commission and to the Speaker of the House and the President of the Senate for delivery to the appropriate committees of Congress. Such notice may be telephonic or by such other means as practicable, and shall be confirmed in writing.

§ 209.33 Conduct of meetings.

(a) Subject to the provisions of paragraph (c) of this section, meetings held to carry out a voluntary agreement, or to develop or carry out a plan of action pursuant to this subpart, shall be open to all interested persons, subject to limitations of space. Interested persons desiring to attend meetings under this subpart may be required to advise the Administrator in advance.

(b) Interested persons permitted to attend meetings under this section may present data, views, and arguments orally and in writing, subject to such limitations with respect to the manner of presentation as the Administrator may impose.

(c) Meetings held pursuant to this subpart shall not be open to the public to the extent that the President or his delegate finds that disclosure of the proceedings beyond those authorized to attend would be detrimental to the foreign policy interests of the United States, and determines, in consultation with the Administrator, the Secretary of State, and the Attorney General, that a meeting shall not be open to interested persons or that attendance by interested persons shall be limited.

(d) The requirements of this section do not apply to meetings of bodies created by the International Energy Agency except that no participant in a voluntary agreement may attend any meeting of any such body held to carry out a voluntary agreement or to develop or to carry out a plan of action unless a full-time Federal employee is present.

§ 209.34 Maintenance of records.

(a) The Administrator or his delegate shall keep a verbatim transcript of any meeting held pursuant to this subpart except where (1) due to considerations of time or other overriding circumstances, the keeping of a verbatim transcript is not practicable, or (2) principal participants in the meeting are representatives of foreign governments. If any such record other than a verbatim transcript, is kept by a designee who is not a full-time Federal employee, that record shall be submitted to the full-time Federal employee in attendance at the meeting who shall review the record, promptly make any changes he deems necessary to make the record full and complete, and shall notify the designee of such changes.

(b)(1) Except as provided in paragraphs (b) (2) through (4) of this section, participants shall keep a full and complete record of any communication (other than in a meeting held pursuant to this subpart) between or among themselves or with any other member of a petroleum industry group created by the International Energy Agency, or subgroup thereof for the purpose of carrying out a voluntary agreement or developing or carrying out a plan of action under this subpart, except that where there are several communications within the same day involving the same participants, they may keep a cumulative record for the day. The parties to a communication may agree among themselves who shall keep such record. Such record shall include the names of the parties to the communication and the organizations, if any, which they represent; the date of communication; the means of communication, and a description of the communication in sufficient detail to convey adequately its substance.

(2) Where any communication is written (including, but not limited to, telex, telegraphic, telecopied, microfilmed and computer printout material), and where such communication demonstrates on its face that the originator or some other source furnished a

copy of the communication to the Office of International Affairs, Department of Energy with the notation ''Voluntary Agreement'' on the first page of the document, no participants need record such a communication or send a further copy to the Department of Energy. The Department of Energy may, upon written notice to participants, from time to time, or with reference to particular types of documents, require deposit with other offices or officials of the Department of Energy. Where such communication demonstrates that it was sent to the Office of International Affairs, Department of Energy with the notation ''Voluntary Agreement'' on the first page of the document, or such other offices or officials as the Department of Energy has designated pursuant to this section, it shall satisfy paragraph (c) of this section, for the purpose of deposit with the Department of Energy.

(3) To the extent that any communication is procedural, administrative or ministerial (for example, if it involves the location of a record, the place of a meeting, travel arrangements, or similar matters) only a brief notation of the date, time, persons involved and description of the communication need be recorded; except that during an IEA emergency allocation exercise or an allocation systems test such a non-substantive communication between members of the Industry Supply Advisory Group (ISAG) which occur within IEA headquarters need not be recorded.

(4) To the extent that any communication involves matters which recapitulate matters already contained in a full and complete record, the substance of such matters shall be identified, but need not be recorded in detail, provided that reference is made to the record and the portion thereof in which the substance is fully set out.

(c) Except where the Department of Energy otherwise provides, all records and transcripts prepared pursuant to paragraphs (a) and (b) of this section, shall be deposited within seven (7) days after the close of the week (ending Saturday) of their preparation during an international energy supply emergency or a test of the IEA emergency allocation system, and within fifteen (15) days after the close of the month of their preparation during periods of non-emergency, together with any agreement resulting therefrom, with the Department of Energy and shall be available to the Department of Justice, the Federal Trade Commission, and the Department of State. Such records and transcripts shall be available for public inspection and copying to the extent set forth in subpart D. Any person depositing materials pursuant to this section shall indicate with particularity what portions, if any, the person believes are not subject to disclosure to the public pursuant to subpart D and the reasons for such belief.

(d) Any meeting between a participant and an official of DOE for the purpose of carrying out a voluntary agreement or developing or carrying out a plan of action shall, if not otherwise required to be recorded pursuant to this section, be recorded by such official as provided in § 204.5.

(e) During international oil allocation under chapters III and IV of the IEP or during an IEA allocation systems test, the Department of Energy may issue such additional guidelines amplifying the requirements of these regulations as the Department of Energy determines to be necessary and appropriate.

(Approved by the Office of Management and Budget under Control No. 1905–0067)

(Federal Energy Administration Act of 1974, Pub. L. 93–275, as amended; E.O. 11790, 39 FR 23185; E.O. 11930, 41 FR 32397; Energy Policy and Conservation Act, Pub. L. 94–163; E.O. 11912, 41 FR 15825; Department of Energy Organization Act, Pub. L. 95–91, 91 Stat. 565, E.O. 12009, 42 FR 46267)

[41 FR 6754, Feb. 13, 1976, as amended at 43 FR 12854, Mar. 28, 1978; 46 FR 63209, Dec. 31, 1981]

Subpart D—Availability of Information Relating to Meetings and Communications

§ 209.41 Availability of information relating to meetings and communications.

(a) Except as provided in paragraph (b) of this section, records or transcripts prepared pursuant to this subpart shall be available for public inspection and copying in accordance

with section 552 of title 5, United States Code and part 202 of this title.

(b) Matter may be withheld from disclosure under section 552(b) of title 5 only on the grounds specified in:

(1) Section 552(b)(1), applicable to matter specifically required by Executive Order to be kept secret in the interest of the national defense or foreign policy. This section shall be interpreted to include matter protected under Executive Order No. 11652 of March 8, 1972, establishing categories and criteria for classification, as well as any other such orders dealing specifically with disclosure of IEP related materials;

(2) Section 552(b)(3), applicable to matter specifically exempted from disclosure by statute; and

(3) So much of section 552(b)(4) as relates to trade secrets.

PART 210—GENERAL ALLOCATION AND PRICE RULES

Subpart A—Recordkeeping

Sec.
210.1 Records.

Subparts B–D [Reserved]

AUTHORITY: Emergency Petroleum Allocation Act of 1973, Pub. L. 93–159, E.O. 11748, 38 FR 33577; Economic Stabilization Act of 1970, as amended, Pub. L. 92–210, 85 Stat. 743; Pub. L. 93–28, 87 Stat. 27; E.O. 11748, 38 FR 33575; Cost of Living Council Order Number 47, 39 FR 24.

Subpart A—Recordkeeping

§210.1 Records.

(a) The recordkeeping requirements that were in effect on January 27, 1981, in parts 210, 211, and 212 will remain in effect for (1) all transactions prior to February 1, 1981; and (2) all allowed expenses incurred and paid prior to April 1, 1981 under §212.78 of part 212. These requirements include, but are not limited to, the requirements that were in effect on January 27, 1981, in §210.92 of this part; in §§211.67(a)(5)(ii); 211.89; 211.109, 211.127; and 211.223 of part 211; and in §§212.78(h)(5)(ii); 212.78(h)(6); 212.83(c)(2)(iii)(E)(I); 212.83(c)(2)(iii)(E)(II); 212.83(c)(2)(iii); ''F_i t''; 212.83(i); 212.93(a); 212.93(b)(4)(iii)(B)(I); 212.93(i)(4); 212.94(b)(2)(iii); 212.128; 212.132; 212.172; and §212.187 of part 212.

(b) Effective February 5, 1985, paragraph (a) of this section shall apply, to the extent indicated, only to firms in the following categories. A firm may be included in more than one category, and a firm may move from one category to another. The fact that a firm becomes no longer subject to the recordkeeping requirements of one category shall not relieve that firm of compliance with the recordkeeping requirements of any other category in which the firm is still included.

(1) Those firms which are or become parties in litigation with DOE, as defined in paragraph (c)(1) of this section. Any such firm shall remain subject to paragraph (a) of this section. DOE shall notify the firm in writing of the final resolution of the litigation and whether or not any of its records must be maintained for a further period. DOE shall notify a firm which must maintain any records for a further period when such records are no longer needed.

(2)(i) Those firms which as of November 30 1984, have completed making all restitutionary payments required by an administrative or judicial order, consent order, or other settlement or order but which payments are on February 5, 1985, still subject to distribution by DOE. This requirement is applicable to only those firms listed in appendix B. Any such firm shall maintain all records for the time period covered by the administrative or judicial order, consent order, or other settlement or order requiring the payments, evidencing sales volume data for each product subject to controls and customers' names and addresses, until one of the following: June 30, 1985, unless this period is extended on a firm-by-firm basis; the end of the individual firm's extension; or the firm is notified in writing that its records are no longer needed.

(ii) Those firms which as of November 30, 1984, are required to make restitutionary or other payments pursuant to an administrative or judicial order, consent order, or other settlement or order. Any such firm shall remain subject to paragraph (a) of this

section until the firm completes all restitutionary payments required by the administrative or judicial order, consent order, or other settlement or order. However, after completing all such payments, a firm shall maintain all records described in paragraph (b)(2)(i) of this section until one of the following: Six months after the firm completes all such payments, unless this period is extended on a firm-by-firm basis; the end of the individual firm's extension; or the firm is notified in writing that its records are no longer needed.

(3)(i) Those firms with completed audits in which DOE has not yet made a determination to initiate a formal enforcement action and firms under audit which do not have outstanding subpoenas. Any such firm shall maintain all records for the period covered by the audit including all records necessary to establish historical prices or volumes which serve as the basis for determining the lawful prices or volumes for any subsequent regulated transaction which is subject to audit, until one of the following: June 30, 1985, unless this period is extended on a firm-by-firm basis; the end of the individual firm's extension; or the firm is notified in writing by DOE that its records are no longer needed. However, if a firm in this group shall become a party in litigation, the firm shall then be subject to the recordkeeping requirements for firms in litigation set forth in paragraph (b)(1) of this section.

(ii) Those firms under audit which have outstanding subpoenas on February 5, 1985, or which receive subpoenas at any time thereafter or which have supplied records for an audit as the result of a subpoena enforced after November 1, 1983. Any such firm shall remain subject to paragraph (a) of this section until two years after ERA has notified the firm in writing that is in full compliance with the subpoena or until ERA has received from the firm a sworn certification of compliance with the subpoena as required by 10 CFR 205.8. However, if a firm in this group shall become a party in litigation, the firm shall then be subject to the recordkeeping requirements for firms in litigation set forth in paragraph (b)(1) of this section.

(4) Those firms which are subject to requests for data necessary to verify that crude oil qualifies as ''newly discovered'' crude oil under 10 CFR 212.79. Any such firm shall maintain the records evidencing such data until one of the following: June 30, 1985, unless this period is extended on a firm-by-firm basis; the end of an individual firm's extension; or the firm is notified in writing by DOE that its records are no longer needed. However, if a firm in this group shall become a party in litigation, the firm shall then be subject to the recordkeeping requirements for firms in litigation set forth in paragraph (b)(1) of this section.

(5) Those firms whose records are determined by DOE as necessary to complete the enforcement activity relating to another firm which is also subject to paragraph (a) of this section unless such firms required to keep records have received certified notice letters specifically describing the records determined as necessary. At that time, the specific notice will control the recordkeeping requirements. These firms have been identified in appendix A. Any such firm shall maintain these records until one of the following: June 30, 1985, unless this period is extended on a firm-by-firm basis; the end of the individual firm's extension; or the firm is notified in writing by DOE that its records are no longer needed.

(6) Those firms which participated in the Entitlements program. Any such firm shall maintain its Entitlements-related records until six months after the final judicial resolution (including any and all appeals) of *Texaco* v. *DOE*, Nos. 84–391, 84–410, and 84–456 (D. Del.), or the firm is notified by DOE that its records are no longer needed, whichever occurs first.

(c) For purposes of this section:

(1) A firm is ''a party in litigation'' if:

(i)(A) The firm has received a Notice of Probable Violation, a Notice of Probable Disallowance, a Proposed Remedial Order, or a Proposed Order of Disallowance; or

(B) The firm and DOE are parties in a lawsuit arising under the Emergency Petroleum Allocation Act of 1973, as amended (15 U.S.C. 751 *et seq.*) or 10 CFR parts 205, 210, 211, or 212; and

(ii)(A) There has been no final (that is, non-appealable) administrative or judicial resolution, or

(B) DOE has not informed the firm in writing that the Department has completed its review of the matter.

(2) A firm means any association, company, corporation, estate, individual, joint-venture, partnership, or sole proprietorship, or any other entity, however organized, including charitable, educational, or other eleemosynary institutions, and state and local governments. A firm includes a parent and the consolidated and unconsolidated entities (if any) which it directly or indirectly controls.

APPENDIX A TO 10 CFR 210.1—THIRD PARTY FIRMS

Name of Firm

A & R, Inc.
A. J. Petroleum
ADA Resources, Inc.
ATC Petroleum
Abbco Petroleum, Inc.
Ada Oil Company
Adams Grocery
Advanced Petroleum Distributing Co.
Agway Inc.
Allegheny Petroleum Corp.
Alliance Oil and Refining Company
Allied Chemical Corp.
Allied Transport
Amerada Hess Corp.
American Natural Crude Oil Assoc.
Amoco Production Company
Amorient Petroleum, Inc.
An-Son Transportation Co.
Anadarko Products Co.
Andrus Energy Corp.
Antler Petroleum
Arco Pipeline Company
Armada Petroleum Corp.
Armour Oil Company
Arnold Brooks Const. Inc.
Ashland Oil
Asiatic Petroleum Co.
Aspen Energy, Inc.
Athens General Hospital
Atlantic Pacific Energy, Inc.
Atlas Processing Company
B & B Trading Company
BLT, Inc.
BPM, Ltd.
Baker Services, Inc.
Basin Inc.
Basin Petroleum, Inc.
Beacon Hill Mobil
Belcher Oil Company
Bighart Pipeline Company
Bigheart Pipeline Corp
Bowdoin Square Exxon
Bowdoin Super Service (Sunoco)
Brio Petroleum, Inc.
Brixon
C.E. Norman
CPI Oil & Refining
CRA-Farmland Industries, Inc.
Calcaseiu Refining, Ltd.
Carbonit Houston, Inc.
Carr Oil Company, Inc.
Castle Coal & Oil Co.
Central Crude Corporation
Century Trading Co.
Charter Crude Oil
Chastain Vineyard
Chevron USA, Inc.
Cibro Petroleum, Inc.
Cirillo Brothers
Cities Service (Citgo) Station
Cities Service Company
Cities Service Midland
City of Athens
Clarke County Board of Education
Claude E. Silvey
Coastal Corporation (The)
Coastal Petroleum and Supply Inc.
Coastal States Trading Company
Commonwealth Oil Refining Co., Inc.
Coral Petroleum Canada, Inc.
Coral Petroleum, Inc.
Corex of Georgia
Cothran Interstate Exxon
Couch's Standard Chevron
Cougar Oil Marketers Inc.
Crude Company (The)
Crystal Energy Corporation
Crystal Refining
D & E Logging
DDC Corporation of America
Darrell Williamson
Davis Ellis
Days Inn of America, Inc.
Delta Petroleum & Energy Corp.
Derby & Company, Inc.
Derby Refining Company
Dewveall Petroleum
Dixie Oil Company
Dixon Oil Co.
Don Hardy
Donald Childs
Dow Chemical Company
Dr. Joe L. Griffeth
Driver Construction Co.
Drummond Brothers, Inc.
Duffie Monroe & Sons Co., Inc.
ECI (A/K/A Energy Cooperative Inc.)
Earnest Dalton
Earth Resources Trading
Eastern Seaboard Petroleum, Inc.
Elmer Hammon
Elvin Knight
Empire Marketing, Inc.
Encorp.
Energy Cooperative, Inc.
Energy Distribution Co.
Englehard Corporation
Englehard Oil Corporation
Entex
Evans Oil Co.

Exxon Company
F & S Trading Company, Inc.
Farmers Union Central Exchange, Inc.
Farmland Industries Inc.
Fasgo, Inc.
Fedco Oil Company
Federal Employees Distributing Co.
Fitzpatrick Spreader
Flutz Oil Company
Flying J. Inc.
Foremost Petroleum
Four Corners Pipe Line
Frank Katz
Frank W. Abrahamsen
Frank's Butane, Inc.
Friendswood Refinery
Frontier Manor Collection
Fuel Oil Supply & Terminaling, Inc.
G. C. Clark Company
GPC Marketing Company
Gary Refining Co.
Geer Tank Trucks, Inc.
Gene Clary
Gene McDonald
General Crude Oil Company
Geodynamics Oil & Gas Inc.
George Kennedy
George Smith Chevron
Gleason Oil Company
Glenn Company
Globe Oil Co.
Godfrey's Standard Service
Good Hope Industries, Inc.
Good Hope Refineries, Inc.
Granite Oil Company
Guam Oil & Refining Co., Inc.
Gulf States Oil & Refining Company
H. D. Adkinson
H. H. Dunson
H.S. & L, Inc.
HNG Oil Company
Harbor Petroleum, Inc.
Harbor Trading
Harmony Grove Mills, Inc.
Harry Rosser
Hast Oil, Inc.
Heet Gas Company
Henry Alva Mercer
Herndon Oil & Gas Company
Horizon Petroleum Company
Houston Oil & Minerals Products Co.
Houston Oil & Refining
Howell Corporation
Hurricane Trading Company, Inc.
Hydrocarbon Trading and Transport Co.
Inco Trading
Independent Refining Corp.
Independent Trading Corporation
Indiana Refining, Inc.
Intercontinental Petroleum Corp.
International Crude Corporation
International Petro
International Petroleum Trading, Inc.
International Processors
Isthmus Trading Corporation
J & M Transport
J. & J.'s Fast Stop
J. A. Rackerby Corporation
J. H. Baccus
J. H. Baccus & Co.
J. J. Williamson
J. M. Petroleum Corporation
JPK Industries
Jack W. Grigsby
Jaguar Petroleum, Inc.
James L. Bush
Jay Petroleum Company
Jay-Ed Petroleum Company
John W. McGowan
Kalama Chemical, Inc.
Kelly Trading Corp.
Kenco Refining
Kerr-McGee Corporation
Koch Fuel
Koch Industries, Inc.
Kocolene Oil
Kocolene Station
L & L Resources, Inc.
L.S. Parker
LaGloria Oil & Gas
LaJet, Inc.
Lamar Refining Co.
Langham Petroleum Corp.
Larry Roberts
Laurel Oil, Inc.
Lee Allen
Lincoln Land Sales Company
Listo Petroleum Inc.
Longview Refining Corp.
Love's Standard
Lucky Stores Inc.
M.L. Morrow
Magna Energy Corporation
Magnolia Oil Company
Mansfield Oil Co.
Mapco Petroleum, Inc.
Mapco, Inc.
Marion Trading Co.
Marlex Oil & Refining, Inc.
Marlin Petroleum, Inc.
Martin Oil Company
Mathew's Grocery
McAuleep Oil Co.
McAuley Oil Company
Meadows Gathering, Inc.
Mellon Energy Products Co.
Merit Petroleum, Inc.
Metro Wash, Inc.
Miller Oil Purchasing Co.
Minor Oil, Inc.
Minro Oil, Inc.
Mitchell Oil Co.
Mitsui & Co. (USA) Inc.
Mobil Bay Refining Company
Montgomery Well Drilling
Mundy Food Market
Munford, Inc.
Mutual Petroleum
NRG Oil Company
National Convenience Stores
National Cooperative Refinery
Nicholson Grocery and Gas
North American Petroleum
Northeast Petroleum Corp.

Northeast Petroleum Corporation
Northgate Auto Center
Northwest Crude, Inc.
Nova Refining Corp.
Occidental Petroleum Corp. (includes Permia)
Ocean Drilling and Exploration Co.
Oil Exchange, Inc.
Oilco
Omega Petroleum Corp.
Otoe Corporation
Oxxo Energy Group, Inc.
P & O Falco, Inc.
P. L. Heatley Co.
PEH, Inc.
PIB, Inc.
PSW Distributors Company
Pacific Refinery, Inc.
Pacific Resources, Inc.
Pan American Products Corp.
Par Brothers Food Store
Pauley Petroleum Inc.
Pennzoil Co.
Permian Corporation (The)
Pescar International Corp.
Pescar International Trading Co.
Petraco (U.S.A.) Inc.
Petrade International
Petrol Products, Inc.
Phillips Petroleum Company
Phoenis Petroleum Co.
Phoenix Petroleum Co.
Pine Mountains
Poole Petroleum
Port Petroleum
Presley Oil Co.
Procoil Inc.
Publiker Industries, Inc.
Pyramid Dist. Co., Inc.
Questor Crude Oil Company
Quitman Refining Co.
R. H. Garrett Paving
Ra-Gan Fuel, Inc.
Reeder Distributing Co.
Reeder Distributors
Reese Exploration Co.
Research Fuels Inc.
Revere Petroleum Co.
Richardson-Ayres, Inc.
Robert Bishop
Robert Patrick
Roberts Grocery
Rock Island Refining Corporation
Rogers Oil Company
Roy Baerne
Russell Oil Company
S. G. Coplen
SECO (Scruggs Energy)
Saber Crude Oil, Inc.
Saber Refining Company
Salem Ventures, Inc.
Samson Resources Company
Santa Fe Energy Products Co.
Saye's Truck Stop
Scandix Oil Limited
Score, Inc.
Scruggs Energy Company
Scurlock Oil Company
Scurry Oil Company
Seamount Petroleum Company
Seaview Petroleum Company
Sector Refining, Inc.
Selfton Miller
Shepherd Trading Corporation
Shulze Processing
Sigmor Corporation
Skelly Oil Company
South Hampton Refining Company
South Texas LP Gas Co.
Southern Crude Oil Resources
Southern Terminal & Transport, Ltd.
Southern Union Company
Southwest Petro. Energy
Southwest Petrochem
Standard Oil Co. (Ohio)
Standard Oil Co. of California
Standard Oil Company (Indiana)
Standard Oil Company (Ohio)
Sterling Energy Company
Steve Childs
Stix Gas Company, Inc.
Sunset Grocery
Sunset Oil & Refining, Inc.
Swanee Petroleum Company
T & P Enterprises
T. B. Eley
T. E. Jawell
Tauber Oil Company
Tenneco, Inc.
Tesoro Crude Oil Company
Texana Oil & Gas Corp.
Texas American Petrochemicals (TAP)
Texas City Refining
Texas Eastern Transmission Corp.
Texas Energy Reserve Corporation
Texas Pacific Oil Company
Thomas Cockvell
Thomas Petroleum Products, Inc.
Thorton Oil Company
Thyssen Incorporated
Tiger Petroleum Company
Time Oil Co.
Tipperary Refining Company
Tom Banks
Tom Smith
Tomlinson Petroleum, Inc.
Tosco Corporation
Total Petroleum, Inc.
Trans-Texas Petroleum Corp.
Transco Trading Company
Turboil Oil and Refining
Two Rivers Oil & Gas Co., Inc.
U-Fill 'er Up
USA Gas, Inc.
Uni Oil Company
Union Oil of California
Doram Energy
United Petroleum Marketing
United Refining Company
United Refining, Inc.
Universal Rundle
Val-Cap, Inc.
Vedetta Oil Trading, Inc.
Vedette Oil Trading, Inc.

Vickers Energy Corp.
W. C. Colquitt
W. T. Strickland
W. W. Blanton
W.A. Nunnally, Jr., Construction Co.
W.D. Porterfiled
Wellven, Inc.
West Texas Marketing Corp.
Western Crude Oil, Inc.
Western Fuels, Inc.
Wight Nurseries of Oglethorpe Co.
William Seabolt
Wilson's Used Tractors
Windsor Gas Corp.
Wyoming Refining

APPENDIX B TO 10 CFR 210.1—FIRMS WITH COMPLETED PAYMENTS SUBJECT TO DISTRIBUTION

The following firms have completed making restitutionary payments to DOE but their payments are still subject to distribution by DOE. Each such firm must maintain relevant records until June 30, 1985, unless this period is extended on a firm-by-firm basis. Relevant records are all records of the firm, including any affiliates, subsidiaries or predecessors in interest, for the time period covered by the judicial or administrative order, consent order, or other settlement or order requiring the payments, evidencing sales volume data for each product subject to controls and customers' names and addresses.

Name of firm	Location
A. Tarricone Inc	Yonkers, NY.
Adolph Coors Company	Golden, CO.
Allied Materials Corp & Excel	Oklahoma City, OK.
Aminoil USA, Inc	Houston, TX.
Amtel, Inc	Providence, RI.
Apache Corporation	Minneapolis, MN.
APCO Oil Corporation	Oklahoma City, OK.
Arapaho Petroleum, Inc	Breckenridge, TX.
Arkansas Louisiana Gas Company.	Shreveport, LA.
Arkla Chemical Corporation	Shreveport, LA.
Armour Oil Company	San Diego, CA.
Associated Programs Inc	Boca Raton, FL.
Atlanta Petroleum Production	Fort Worth, TX.
Automatic Heat, Inc.	
Ayers Oil Company	Canton, MD.
Aztex Energy Corporation	Knoxville, TN.
Bak Ltd	Narbeth, PA.
Bayou State Oil/IDA Gasoline	Shreveport, LA.
Bayside Fuel Oil Depot Corp	Brooklyn, NY.
Belridge Oil Company	Los Angeles, CA.
Blaylock Oil Co., Inc	Homestead, FL.
Blex Oil Company	Minneapolis, MN.
Boswell Oil Company	Cincinnati, OH.
Box, Cloyce K	Dallas, TX.
Breckenridge Gasoline Company	Kansas City, KS.
Brownlie, Wallace, Armstrong	Denver, CO.
Bucks Butane & Propane Service	San Jose, CA.
Budget Airport Associates	Los Angeles, CA.
Busler Enterprises Inc	Evansville, IN.
Butler Petroleum Corp	Butler, PA.
C.K. Smith & Company, Inc	Worcester, MA.
Cap Oil Company	Tulsa, OK.
Champlain Oil Co., Inc	South Burlington, VT.
Chapman, H.A	Tulsa, OK.
Cibro Gasoline Corporation	Bronx, NY.
City Service Inc	Kalispell, MT.
Coastal Corporation	Houston, TX.
Coline Gasoline Corporation	Santa Fe Springs, CA.
Collins Oil Co	Aurora, IL.
Columbia Oil Co	Hamilton, OH.
Conlo Service Inc	East Farmingdale, NY.
Conoco, Inc	Houston, TX.
Consolidated Gas Supply Corp	Hastings, WV.
Consolidated Leasing Corp	Los Angeles, CA.
Consumers Oil Co	Rosemead, CA.
Continental Resources Company	Winter Park, FL.
Cordele Operating Co	Corsicana, TX.
Cosby Oil Co., Inc	Whittier, CA.
Cougar Oil Co	Selma, AL.
Cross Oil Co., Inc	Wellstone, MO.
Crystal Oil Company (formerly Vallery Corp.).	Shreveport, LA.
Crystal Petroleum Co	Corpus Christi, TX.
Devon Corporation	Oklahoma City, OK.
Dorchester Gas Corp	Dallas, TX.
E.B. Lynn Oil Company	Allentown, PA.
E.M. Bailey Distributing Co	Paducah, KY.
Eagle Petroleum Co	Wichita Falls, TX.
Earls Broadmoor	Houma, LA.
Earth Resources Co	Dallas, TX.
Eastern Petroleum Corp	Annapolis, MD.
Edington Oil Co	Los Angeles, CA.
Elias Oil Company	West Palm Beach, FL.
Elm City Filling Stations, Inc	New Haven, CT.
Empire Oil Co	Bloomington, CA.
Endicott, Eugene	Redmond, OR.
Enserch Corp	Dallas, TX.
Enterprise Oil & Gas Company	Detroit, MI.
F.O. Fletcher, Inc	Tacoma, WA.
Fagadau Energy Corporation	Dallas, TX.
Farstad Oil Company	Minot, ND.
Field Oil Co., Inc	Ogden, UT.
Fine Petroleum Co., Inc	Norfolk, VA.
Foster Oil Co	Richmond, MI.
Franks Petroleum Inc	Shreveport, LA.
Froesel Oil Co.	
Gas Systems Inc	Ft. Worth, TX.
Gate Petroleum Co., Inc	Jacksonville, FL.
GCO Minerals Company	Houston, TX.
Getty Oil Company	Los Angeles, CA.
Gibbs Industries, Inc	Revere, MA.
Glaser Gas Inc	Calhoun, CO.
Glover, Lawrence H	Patchogue, NY.
Goodman Oil Company	Boise, ID.
Grant Rent a Car Corporation	Los Angeles, CA.
Grimes Gasoline Co	Tulsa, OK.
Gulf Energy & Development Corp. (also known as Gulf Energy Development Corp.).	San Antonio, TX.
Gulf Oil Corp	Houston, TX.
Gull Industries, Inc	Seattle, WA.
H.C. Lewis Oil Co	Welch, WV.
Hamilton Brothers Petroleum Co	Denver, CO.
Harris Enterprise Inc	Portland, OR.
Heller, Glenn Martin	Boston, MA.
Hendel's Inc	Waterford, CT.
Henry H. Gungoll Associates	Enid, OK.
Hertz Corporation, The	New York, NY.
Hines Oil Co	Murphysboro, IL.
Horner & Smith, A Partnership	Houston, TX.
Houston Natural Gas Corp	Houston, TX.
Howell Corporation/Quintana Refinery Co.	Houston, TX.
Hunt Industries	Dallas, TX.
Hunt Petroleum Corp	Dallas, TX.
Husky Oil Company of Delaware	Cody, WY.
Ideal Gas Co., Inc	Nyassa, OR.

Name of firm	Location
Independent Oil & Tire Company	Elyria, OH.
Inland USA, Inc	St. Louis, MO.
Inman Oil Co	Salem, MO.
Internorth, Inc	Omaha, NE.
J.E. DeWitt, Inc	South El Monte, CA.
J.M. Huber Corp	Houston, TX.
James Petroleum Corp	Bakersfield, CA.
Jay Oil Company	Fort Smith, AR.
Jimmys Gas Stations Inc	Auburn, ME.
Jones Drilling Corporation	Duncan, OK.
Juniper Petroleum Corporation	Denver, CO.
Kansas-Nebraska Natural Gas Co	Hastings, NE.
Keller Oil Company, Inc	Effingham, IL.
Kenny Larson Oil Co., Inc.	
Kent Oil & Trading Company	Houston, TX.
Key Oil Co., Inc	Tuscaloosa, AL.
Key Oil Company	Bowling Green, KY.
Kiesel Co	St. Louis, MO.
King & King Enterprise	Kansas City, MO.
Kingston Oil Supply Corp	Port Ewen, NY.
Kirby Oil Company.	
L & L Oil Co., Inc	Belle Chasse, LA.
L.P. Rech Distributing Co	Roundup, MT.
La Gloria Oil and Gas Co	Houston, TX.
Lakes Gas Co., Inc	Forest Lake, MN.
Lakeside Refining Co./Crystal	Southfield, MI.
Landsea Oil Company	Irvine, CA.
Leathers Oil Co., Inc	Portland, OR.
Leese Oil Company	Pocatello, ID.
Leonard E. Belcher, Inc	Springfield, MA.
Lincoln Land Oil Co	Springfield, IL.
Liquid Products Recovery	Houston, TX.
Little America Refining Co	Salt Lake City, UT.
Lockheed Air Terminal Inc	Burbank, CA.
Lowe Oil Company	Clinton, MO.
Lucia Lodge Arco	Big Sur, CA.
Luke Brothers Inc	Calera, OK.
Lunday Thargard Oil	South Gate, CA.
Malco Industries Inc	Cleveland, OH.
Mapco, Inc	Tulsa, OK.
Marine Petroleum Co	St. Louis, MO.
Marlen L. Knutson Dist. Inc	Stanwood, WA.
Martin Oil Service, Inc	Blue Island, IL.
Martinoil Company	Fresno, CA.
Marvel Fuel Oil and Gas Co.	
McCarty Oil Co	Wapakoneta, OH.
McCleary Oil Co., Inc	Chambersburg, OH.
McClure's Service Station	Salisbury, PA.
McTan Corporation	Abilene, TX.
Mesa Petroleum Company	Amarillo, TX.
Midway Oil Co	Rock Island, IL.
Midwest Industrial Fuels, Inc	La Crosse, WI.
Mississippi River Transmission	St. Louis, MO.
Mitchell Energy Corp	Woodlands, TX.
Montana Power Co	Butte, MT.
Moore Terminal and Barge Co	Monroe, LA.
Mountain Fuel Supply Company	Salt Lake City, UT.
Moyle Petroleum Co	Rapid City, SD.
Mustang Fuel Corporation	Oklahoma City, OK.
Naphsol Refining Company	Muskegon, MI.
National Helium Corporation	Liberal, KS.
National Propane Corp	Wyandanch, NY.
Navajo Refining Company	Dallas, TX.
Nielson Oil & Propane, Inc	West Point, NE.
Northeast Petroleum Industries	Chelsea, MA.
Northeastern Oil Co., Inc	Gillette, WY.
Northwest Pipeline Corp	Salt Lake City, UT.
O'Connell Oil Co	Pittsfield, MA.
Oceana Terminal Corp. et al	Bronx, NY.
OKC Corporation	Dallas, TX.
Olin Corporation	Stamford, CT.
Oneok Incorporation	Tulsa, OK.
Ozona Gas Processing Plant	Tyler, TX.
Pacer Oil Co. of Florida, Inc	Ormond Beach, FL.
Pacific Northern Oil	Seattle, WA.
Panhandle Eastern (Century)	Houston, TX.
Parade Company	Shreveport, LA.
Parham Oil Corporation	Nashville, TN.
Pasco Petroleum Co., Inc	Phoenix, AZ.
Pedersen Oil, Inc	Silverdale, WA.
Pennzoil Company	Houston, TX.
Perry Gas Processors, Inc	Odessa, TX.
Peoples Energy Corp	Chicago, IL.
Perta Oil Marketing Corp	Beverly Hills, CA.
Peterson Petroleum Inc	Hudson, NY.
Petro-Lewis Corp	Denver, CO.
Petrolane-Lomita Gasoline Co	Long Beach, CA.
Petroleum Heat & Power Co. Inc	Stamford, CT.
Petroleum Sales/Services Inc	Buffalo, NY.
Pioneer Corp	Amarillo, TX.
Planet Engineers Inc	Denver, CO.
Plateau, Inc	Albuquerque, NM.
Plaquemines Oil Sales	Belle Chasse, LA.
Point Landing Inc	Hanrahan, LA.
Port Oil Company, Inc	Mobile, AL.
Post Petroleum Co	West Sacramento, CA.
Power Pak Co., Inc	Houston, TX.
Pride Refining, Inc	Abilene, TX.
Pronto Gas Co	Abilene, TX.
Propane Gas & Appliance Co	New Brockton, AL.
Prosper Energy Corporation	Dallas, TX.
Pyro Energy Corporation	Evansville, IN.
Pyrofax Gas Corporation	Houston, TX.
Quaker State Oil	Oil City, PA.
Quarles Petroleum, Inc	Fredericksburg, VA.
Resources Extraction Process	Houston, TX.
Reynolds Oil Co	Kremling, CO.
Richardson Ayers Jobbers, Inc	Alexandria, LA.
Riverside Oil, Inc	Evansville, IN.
Roberts Oil Co. Inc	Albuquerque, NM.
Rookwood Oil Terminals Inc	Cincinnati, OH.
Saber Energy, Inc	Houston, TX.
Sanesco Oil Co	Escondido, CA.
Schroeder Oil Company	Carroll, IA.
Seminole Refining Inc	St. Marks, FL.
Sid Richardson Carbon & Gas	Ft. Worth, TX.
Sigmore Corporation	San Antonio, TX.
Southwestern Refining Co., Inc	Salt Lake City, UT.
Speedway Petroleum Co., Inc	Fitchburg, MA.
St. James Resources Corp	Boston, MA.
Standard Oil Co. (Indiana)	Chicago, IL.
Stinnes Inter Oil Inc	New York, NY.
Tenneco Oil Company	Houston, TX.
Texas/Arkansas/Colorado/Oklahoma/Oil Purchasing.	Dallas, TX.
Texas Gas & Exploration	Dallas, TX.
Texas Oil & Gas Corporation	Dallas, TX.
Texas Pacific Oil Company, Inc	Dallas, TX.
The True Companies	Casper, WY.
Thompson Oil Inc	Purcellville, VA.
Tiger Oil Co	Yakima, WA.
Time Oil Company	Seattle, WA.
Tipperary Corp	Midland, TX.
Tippins Oil & Gas Co	Richmond, MO.
Triton Oil & Gas Corp	Dallas, TX.
U.S. Compressed Gas Company	King of Prussia, PA.
U.S. Oil Company	Combined Locks, WI.
U.S.A. Petroleum, Inc	Santa Monica, CA.
Union Texas Petroleum Corp	Houston, TX.
United Oil Company	Hillside, NJ.
Upham Oil & Gas Co	Mineral Wells, TX.
Vangas Inc	Fresno, CA.
VGS Corporation	Jackson, MS.
Waller Petroleum Company, Inc	Towson, MD.
Warren Holding Company	Providence, RI.
Warrior Asphalt Co. of Alabama	Tuscaloosa, AL.
Webco Southern Oil Inc	Smyrna, CA.
Wellen Oil Co	Jersey City, NJ

Name of firm	Location
Wiesehan Oil Co.	
Willis Distributing Company	Erie, PA.
Winston Refining Company	Fort Worth, TX.
Witco Chemical Corporation	New York, NY.
World Oil Company	Los Angeles, CA.
Worldwide Energy Corp	Denver, CO.
Young Refining Corporation	Douglasville, GA.
Zia Fuels (G.G.C. Corp.)	Hobbs, NM.

(Approved by the Office of Management and Budget under control number 1903–0073)

[50 FR 4962, Feb. 5, 1985]

Subparts B–D [Reserved]

PART 212—MANDATORY PETROLEUM PRICE REGULATIONS

Subparts A–C [Reserved]

Subpart D—Producers of Crude Oil

Sec.
212.78 Tertiary incentive crude oil.

Subparts E–I [Reserved]

AUTHORITY: Emergency Petroleum Allocation Act of 1973, Pub. L. 93–159, E.O. 11748, 38 FR 33577; Economic Stabilization Act of 1970, as amended, Pub. L. 92–210, 85 Stat. 743; Pub. L. 93–28, 87 Stat. 27; E.O. 11748, 38 FR 33575; Cost of Living Council Order Number 47, FR 24.

Subparts A–C [Reserved]

Subpart D—Producers of Crude Oil

§ 212.78 Tertiary incentive crude oil.

Annual prepaid expenses report. By January 31 of each year after 1980, the project operator with respect to any enhanced oil recovery project for which a report had been filed previously with DOE pursuant to paragraph (h)(2)(i) of this section as that paragraph was in effect on January 27, 1981, shall file with DOE a report in which the operator shall certify to DOE (a) which of the expenses that had been reported previously to DOE pursuant to paragraph (h)(2)(i) of this section as that paragraph was in effect on January 27, 1981, were prepaid expenses; (b) the goods or services for which such expenses had been incurred and paid; (c) the dates on which such goods or services are intended to be used; (d) the dates on which such goods or services actually are used; (e) the identity of each qualified producer to which such prepaid expenses had been attributed; and (f) the percentage of such prepaid expenses attributed to each such qualified producer. An operator shall file an annual prepaid expenses report each year until it has reported the actual use of all the goods and services for which a prepaid expense had been incurred and paid. For purposes of this paragraph, a prepaid expense is an expense for any injectant or fuel used after September 30, 1981, or an expense for any other item to the extent that IRS would allocate the deductions (including depreciation) for that item to the period after September 30, 1981.

(Approved by the Office of Management and Budget under OMB Control No.: 1903–0069)

[46 FR 43654, Aug. 31, 1981, as amended at 46 FR 63209, Dec. 31, 1981]

Subparts E–I [Reserved]

PART 215—COLLECTION OF FOREIGN OIL SUPPLY AGREEMENT INFORMATION

Sec.
215.1 Purpose.
215.2 Definitions.
215.3 Supply reports.
215.4 Production of contracts and documents.
215.5 Pricing and volume reports.
215.6 Notice of negotiations.

AUTHORITY: Emergency Petroleum Allocation Act of 1973, Pub. L. 93–519, as amended, Pub. L. 93–511, Pub. L. 94–99, Pub. L. 94–133 and Pub. L. 94–163, and Pub. L. 94–385; Federal Energy Administration Act of 1974, Pub. L. 93–275, as amended, Pub. L. 94–385; Energy Policy and Conservation Act, Pub. L. 94–163, as amended, Pub. L. 94–385; E.O. 11790, 39 FR 23185.

SOURCE: 42 FR 48330, Sept. 23, 1977, unless otherwise noted.

§ 215.1 Purpose.

The purpose of this part is to set forth certain requirements pursuant to section 13 of the Federal Energy Administration Act to furnish information concerning foreign crude oil supply arrangements. The authority set out in this section is not exclusive.

§215.2 Definitions.

As used in this subpart:

Administrator means the Federal Energy Administrator or his delegate.

DOE means the Department of Energy.

Host government means the government of the country in which crude oil is produced and includes any entity which it controls, directly or indirectly.

Person means any natural person, corporation, partnership, association, consortium, or any other entity doing business or domiciled in the U.S. and includes (a) any entity controlled directly or indirectly by such a person and (b) the interest of such a person in any joint venture, consortium or other entity to the extent of entitlement to crude oil by reason of such interest.

§215.3 Supply reports.

(a) Any person having the right to lift for export by virtue of any equity interest, reimbursement for services, exchange or purchase, from any country, from fields actually in production, (1) an average of 150,000 barrels per day or more of crude oil for a period of at least one year, or (2) a total of 55,000,000 barrels of crude oil for a period of less than one year, or (3) a total of 150,000,000 barrels of crude oil for the period specified in the agreement, pursuant to supply arrangements with the host government, shall report the following information.

(1) Parties (including partners and percentage interest, where applicable).

(2) Grade or grades available; loading terminal or terminals.

(3) Government imposed production limits, if any.

(4) Minimum lifting obligation and maximum lifting rights.

(5) Details of lifting options within the above limits.

(6) Expiration and renegotiation dates.

(7) Price terms including terms of rebates, discounts, and number of days of credit calculated from the date of loading.

(8) Other payments to or interests retained by the host government (i.e. taxes, royalties, and any other payment to the host government) expressed in terms of the applicable rates or payment or preemption terms, or the base to which those rates or terms are applied.

(9) Related service or other fees and cost of providing services.

(10) Restrictions on shipping or disposition.

(11) Other material contract terms.

(b) Reports under this section shall be made no later than (1) 60 days after final issuance of reporting forms implementing this regulation, as announced in the FEDERAL REGISTER, (2) fourteen days after the date when supply arrangements are entered into, or (3) fourteen days after the initial lifting under an agreement in which the parties have tentatively concurred but not signed, whichever occurs first. Reporting shall be based on actual practice between the parties. Material changes in any item which must be reported pursuant to this section shall be reported no later than 30 days after a person receives actual notice of such changes.

(c) Where reports under this section by each participant in a joint operation would be impracticable, or would result in the submission of inaccurate or misleading information, the participants acting together may designate a single participant to report on any of the rights, obligations, or limitations affecting the operation as a whole. Any such designation shall be signed by a duly authorized representative of each participant, and shall specify:

(1) The precise rights, obligations, or limitations to be covered by the designation; and

(2) The reasons for the designation. Such designations shall be submitted to the Assistant Administrator for International Energy Affairs, and shall take effect only upon his written approval, which may at any time be revoked.

§215.4 Production of contracts and documents.

Whenever the Administrator determines that certain foreign crude oil supply information is necessary to assist in the formulation of energy policy or to carry out any other function of the Administrator, he may require the production by any person of any agreement or document relating to foreign

oil supply arrangements or reports related thereto. Such material shall be provided pursuant to the conditions prescribed by the Administrator at the time of such order or subsequently. As used in this section, the term ''agreement'' includes proposed or draft agreements, and agreements in which the parties have tentatively concurred but have not yet signed, between or among persons and a host country.

§ 215.5 Pricing and volume reports.

To the extent not reported pursuant to § 215.3, any person lifting for export crude oil from a country shall report to the DOE within 30 days of the date on which he receives actual notice:

(a) Any change (including changes in the timing of collection) by the host government in official selling prices, royalties, host government taxes, service fees, quality or port differentials, or any other payments made directly or indirectly for crude oil; changes in participation ratios; changes in concessionary arrangements; and

(b) Any changes in restrictions on lifting, production, or disposition.

§ 215.6 Notice of negotiations.

Any person conducting negotiations with a host government which may reasonably lead to the establishment of any supply arrangement subject to reporting pursuant to § 215.3(a), or may reasonably have a significant effect on the terms and conditions of an arrangement subject to § 215.3(a), shall notify DOE of such negotiations. Such notice shall be made no later than the later of 30 days after the effective date of this regulation or within 14 days after such negotiations meet the conditions of this section, and shall specify all persons involved and the host government affected. Notice must be in writing to the Assistant Administrator for International Energy Affairs. Where this notice pertains to negotiations to modify a supply agreement previously reported to the Department of Energy under this part, such notice shall include the agreement serial number assigned to the basic agreement.

PART 216—MATERIALS ALLOCATION AND PRIORITY PERFORMANCE UNDER CONTRACTS OR ORDERS TO MAXIMIZE DOMESTIC ENERGY SUPPLIES

Sec.

216.1 Introduction.
216.2 Definitions.
216.3 Requests for assistance.
216.4 Evaluation by DOE of applications.
216.5 Notification of findings.
216.6 Petition for reconsideration.
216.7 Conflict in priority orders.
216.8 Communications.
216.9 Violations.

AUTHORITY: Sec. 104 of the Energy Policy and Conservation Act (EPCA) Pub. L. 94–163, 89 Stat. 871; section 101(c) of the Defense Production Act of 1950 (DPA), 50 U.S.C. App. 2071(c); E.O. 12919, 59 FR 29525 (June 7, 1994); E.O. 13286, 68 FR 10619 (March 5, 2003); 15 CFR part 700; Defense Priorities and Allocations System Delegation No. 2 (August 6, 2002), as amended at 15 CFR part 700.

SOURCE: 43 FR 6212, Feb. 14, 1978, unless otherwise noted.

§ 216.1 Introduction.

(a) This part describes and establishes the procedures to be used by the Department of Energy (DOE) in considering and making certain findings required by section 101(c)(2)(A) of the Defense Production Act of 1950, as amended, 50 U.S.C. app. 2071(c)(2)(A) (DPA). Section 101(c) authorizes the allocation of, or priority performance under contracts or orders (other than contracts of employment) relating to, materials and equipment, services, or facilities in order to maximize domestic energy supplies if the findings described in section 101(c)(2) are made. Among these findings are that such supplies of materials and equipment, services, or facilities are critical and essential to maintain or further exploration, production, refining, transportation or the conservation of energy supplies or for the construction or maintenance of energy facilities. The function of finding that supplies are critical and essential was delegated to the Secretary of Energy pursuant to E.O. 12919 (59 FR 29525, June 7, 1994) and Department of Commerce Defense Priorities and Allocations System Delegation No. 2, 15 CFR part 700.

(b) The purpose of these regulations is to establish the procedures and criteria to be used by DOE in determining whether programs or projects maximize domestic energy supplies and whether or not supplies of materials and equipment, services, or facilities are critical and essential, as required by DPA section 101(c)(2)(A). The critical and essential finding will be made only for supplies of materials and equipment, services, or facilities related to those programs or projects determined by DOE to maximize domestic energy supplies. These regulations do not require or imply that the findings, on which the exercise of such authority is conditioned, will be made in any particular case.

(c) If DOE determines that a program or project maximizes domestic energy supplies and finds that supplies of materials and equipment, services, or facilities are critical and essential to maintain or further the exploration, production, refining, transportation or conservation of energy supplies or for the construction or maintenance of energy facilities, such determination and finding will be communicated to the Department of Commerce (DOC). If not, the applicant will be so informed. If the determination and finding described in this paragraph are made, DOC, pursuant to DPA section 101(c) and section 203 of E.O. 12919, will find whether or not: The supplies of materials and equipment, services, or facilities in question are scarce; and maintenance or furtherance of exploration, production, refining, transportation, or conservation of energy supplies or the construction or maintenance of energy facilities cannot be reasonably accomplished without exercising the authority specified in DPA section 101(c). If these additional two findings are made, DOC will notify DOE, and DOE will inform the applicant that it has been granted the right to use priority ratings under the Defense Priorities and Allocations System (DPAS) regulation established by the DOC, 15 CFR part 700.

[73 FR 10983, Feb. 29, 2008]

§ 216.2 Definitions.

As used in these regulations:

(a) *Secretary* means the Secretary of the Department of Energy.

(b) *Applicant* means a person requesting priorities or allocation assistance in connection with an energy program or project.

(c) *Application* means the written request of an applicant for assistance.

(d) *Assistance* means use of the authority vested in the President by DPA section 101(c) to implement priorities and allocation support.

(e) *DHS* means the Department of Homeland Security.

(f) *DOC* means the Department of Commerce.

(g) *DOE* means the Department of Energy.

(h) *Defense Priorities and Allocations System Coordination Office* means the Department of Energy, Office of Electricity and Energy Assurance, OE–30.

(i) *Eligible energy program or project* means a designated activity which maximizes domestic energy supplies by furthering the exploration, production, refining, transportation or conservation of energy supplies or construction or maintenance of energy facilities within the meaning of DPA section 101(c), as determined by DOE.

(j) *Facilities* means all types of buildings, structures, or other improvements to real property (but excluding farms, churches or other places of worship, and private dwelling houses), and services relating to the use of any such building, structure, or other improvement.

(k) *Materials and equipment* means: (1) Any raw materials (including minerals, metals, and advanced processed materials), commodities, articles, components (including critical components), products, and items of supply; and

(2) Any technical information or services ancillary to the use of such raw materials, commodities, articles, components, products, or items.

(l) *National Defense* means programs for military and energy production or construction, military assistance to any foreign nation, stockpiling, space, and any directly related activity. Such term also includes emergency preparedness activities conducted pursuant to title VI of the Robert T. Stafford Disaster Relief and Emergency Assistance Act (42 U.S.C. 5195, *et seq.*) and

critical infrastructure protection and restoration.

(m) *Person* means an individual, corporation, partnership, association, or any other organized group of persons, or legal successor or representative thereof, or any state or local government or agency thereof.

(n) *Services* include any effort that is needed for or incidental to:

(1) The development, production, processing, distribution, delivery, or use of an industrial resource, or critical technology item; or

(2) The construction of facilities.

[43 FR 6212, Feb. 14, 1978, as amended at 51 FR 8311, Mar. 11, 1986; 73 FR 10983, Feb. 29, 2008]

§ 216.3 Requests for assistance.

(a) Persons who believe that they perform work associated with a program or project which may qualify as an eligible energy program or project and wishing to receive assistance as authorized by DPA section 101(c)(1) may submit an application to DOE requesting DOE to determine whether a program or project maximizes domestic energy supplies and to find whether or not specific supplies of materials and equipment, services, or facilities identified in the application are critical and essential for a purpose identified in section 101(c). The application shall be sent to: U.S. Department of Energy, Attn: Office of Electricity and Energy Assurance, OE–30, Forrestal Building, 1000 Independence Avenue, SW., Washington, DC 20585. The application shall contain the following information:

(1) The name and address of the applicant and of its duly authorized representative.

(2) A description of the energy program or project for which assistance is requested and an assessment of its impact on the maximization of domestic energy supplies.

(3) The amount of energy to be produced by the program or project which is directly affected by the supplies of the materials and equipment, services, or facilities in question.

(4) A statement explaining why the materials and equipment, services, or facilities for which assistance is requested are critical and essential to the construction or operation of the energy project or program.

(5) A detailed description of the specific supplies of materials and equipment, services, or facilities in connection with which assistance is requested, including: Components, performance data (capacity, life duration, etc.), standards, acceptable tolerances in dimensions and specifications, current inventory, present and expected rates of use, anticipated deliveries and substitution possibilities (feasibility of using other materials and equipment, services, or facilities).

(6) A detailed description of the sources of supply, including: The name of the regular supplying company or companies, other companies capable of supplying the materials and equipment, services, or facilities; location of supplying plants or plants capable of supplying the needed materials and equipment, services, or facilities; possible suppliers for identical or substitutable materials and equipment, services, or facilities and possible foreign sources of supply.

(7) A detailed description of the delivery situation, including: Normal delivery times, promised delivery time without priorities assistance, and delivery time required for expeditious fulfillment or completion of the program or project.

(8) Evidence of the applicant's unsuccessful efforts to obtain on a timely basis the materials and equipment, services, or facilities in question through normal business channels from current or other known suppliers.

(9) A detailed estimate of the delay in fulfilling or completing the energy program or project which will be caused by inability to obtain the specified materials and equipment, services, or facilities in the usual course of business.

(10) Any known conflicts with rated orders already issued pursuant to the DPA for supplies of the described materials and equipment, services, or facilities.

(b) DOE, on consultation with the DOC, may prescribe standard forms of application or letters of instruction for use by all persons seeking assistance.

(c) In addition to the information described above, DOE may from time to

time request whatever additional information it reasonably believes is relevant to the discharge of its functions pursuant to DPA section 101(c).

[43 FR 6212, Feb. 14, 1978, as amended at 51 FR 8311, Mar. 11, 1986; 73 FR 10983, Feb. 29, 2008]

§216.4 Evaluation by DOE of applications.

(a) Based on the information provided by the applicant and other available information, DOE will:

(1) Determine whether or not the energy program or project in connection with which the application is made maximizes domestic energy supplies and should be designated an eligible energy program or project; and

(2) Find whether the described supplies of materials and equipment, services, or facilities are critical and essential to the eligible energy program or project.

(b) In determining whether the program or project referred to in the application should be designated an eligible energy program or project, DOE will consider all factors which it considers relevant including, but not limited to, the following:

(1) Quantity of energy involved;

(2) Benefits of timely energy program furtherance or project completion;

(3) Socioeconomic impact;

(4) The need for the end product for which the materials and equipment, services, or facilities are allegedly required; and

(5) Established national energy policies.

(c) In finding whether the supplies of materials and equipment, services, or facilities described in the application are critical and essential to an eligible energy program or project, DOE will consider all factors which it considers relevant including, but not limited to, the following:

(1) Availability and utility of substitute materials and equipment, services, or facilities; and

(2) Impact of the nonavailability of the specific supplies of materials and equipment, services, or facilities on the furtherance or timely completion of the approved energy program or project.

(d) Increased costs which may be associated with obtaining materials and equipment, services, or facilities without assistance shall not be considered a valid reason for finding the materials and equipment, services, or facilities to be critical and essential.

(e) After DOE has determined a program or project to be an eligible energy program or project, this determination shall be deemed made with regard to subsequent applications involving the same program or project unless and until DOE announces otherwise.

[43 FR 6212, Feb. 14, 1978, as amended at 73 FR 10984, Feb. 29, 2008]

§216.5 Notification of findings.

(a) DOE will notify DOC if it finds that supplies of materials and equipment, services, or facilities for which an applicant requested assistance are critical and essential to an eligible energy program or project, and in such cases will forward to DOC the application and whatever information or comments DOE believes appropriate. If DOE believes at any time that findings previously made may no longer be valid, it will immediately notify the DOC and the affected applicant(s) and afford such applicant(s) an opportunity to show cause why such findings should not be withdrawn.

(b) If DOC notifies DOE that DOC has found that supplies of materials and equipment, services, or facilities for which the applicant requested assistance are scarce and that the related eligible energy program or project cannot reasonably be accomplished without exercising the authority specified in DPA section 101(c)(1), DOE will notify the applicant that the applicant is authorized to place rated orders for specific materials and equipment, services, or facilities pursuant to the provisions of the DOC's DPAS regulation.

[73 FR 10984, Feb. 29, 2008]

§216.6 Petition for reconsideration.

If DOE, after evaluating an application in accordance with §216.4, does not determine that the energy program or project maximizes domestic energy

supplies or does not find that the supplies of materials and equipment, services, or facilities described in the application are critical and essential to an eligible energy program or project, it will so notify the applicant and the applicant may petition DOE for reconsideration. If DOE concludes at any time that findings previously made are no longer valid and should be withdrawn, DOE will so notify the affected applicant(s), and such applicant(s) may petition DOE for reconsideration of the withdrawal decision. A petition is deemed accepted when received by DOE at the address stated in § 216.8. DOE will consider the petition for reconsideration and either grant or deny the relief requested. Written notice of the decision and of the reasons for the decision will be provided to the applicant. There has not been an exhaustion of administrative remedies until a petition for reconsideration has been submitted and the review procedure completed by grant or denial of the relief requested. The denial of relief requested in a petition for reconsideration is a final administrative decision.

[43 FR 6212, Feb. 14, 1978, as amended at 51 FR 8312, Mar. 11, 1986; 73 FR 10984, Feb. 29, 2008]

§ 216.7 Conflict in priority orders.

If it appears that the use of assistance pursuant to DPA section 101(c) creates or threatens to create a conflict with priorities and allocation support provided in connection with the national defense pursuant to DPA section 101(a), DOE will work with the DOC and other claimant agencies affected by the conflict to reschedule deliveries or otherwise accommodate the competing demands. If acceptable solutions cannot be agreed upon by the claimant agencies DHS will attempt to resolve theconflicts.

[43 FR 6212, Feb. 14, 1978, as amended at 51 FR 8312, Mar. 11, 1986; 73 FR 10984, Feb. 29, 2008]

§ 216.8 Communications.

All written communications concerning these regulations shall be addressed to: U.S. Department of Energy, Attention: Office of Electricity and Energy Assurance, OE–30, Forrestal Building, 1000 Independence Avenue, SW., Washington, DC 20585.

[73 FR 10984, Feb. 29, 2008]

§ 216.9 Violations.

Any person who willfully furnishes false information or conceals any material fact in the course of the application process or in a petition for reconsideration is guilty of a crime, and upon conviction may be punished by fine or imprisonment or both.

PART 217—ENERGY PRIORITIES AND ALLOCATIONS SYSTEM

Subpart A—General

Sec.
217.1 Purpose of this part.
217.2 Priorities and allocations authority.
217.3 Program eligibility.

Subpart B—Definitions

217.20 Definitions.

Subpart C—Placement of Rated Orders

217.30 Delegation of authority.
217.31 Priority ratings.
217.32 Elements of a rated order.
217.33 Acceptance and rejection of rated orders.
217.34 Preferential scheduling.
217.35 Extension of priority ratings.
217.36 Changes or cancellations of priority ratings and rated orders.
217.37 Use of rated orders.
217.38 Limitations on placing rated orders.

Subpart D—Special Priorities Assistance

217.40 General provisions.
217.41 Requests for priority rating authority.
217.42 Examples of assistance.
217.43 Criteria for assistance.
217.44 Instances where assistance may not be provided.

Subpart E—Allocation Actions

217.50 Policy.
217.51 General procedures.
217.52 Controlling the general distribution of a material in the civilian market.
217.53 Types of allocation orders.
217.54 Elements of an allocation order.
217.55 Mandatory acceptance of an allocation order.
217.56 Changes or cancellations of an allocation order.

Subpart F—Official Actions

217.60 General provisions.
217.61 Rating Authorizations.
217.62 Directives.
217.63 Letters and Memoranda of Understanding.

Subpart G—Compliance

217.70 General provisions.
217.71 Audits and investigations.
217.72 Compulsory process.
217.73 Notification of failure to comply.
217.74 Violations, penalties, and remedies.
217.75 Compliance conflicts.

Subpart H—Adjustments, Exceptions, and Appeals

217.80 Adjustments or exceptions.
217.81 Appeals.

Subpart I—Miscellaneous Provisions

217.90 Protection against claims.
217.91 Records and reports.
217.92 Applicability of this part and official actions.
217.93 Communications.
APPENDIX I TO PART 217—SAMPLE FORM DOE F 544 (05–11)

AUTHORITY: Defense Production Act of 1950, as amended, 50 U.S.C. App. 2061–2171; E.O. 12919, as amended, (59 FR 29525, June 7, 1994).

SOURCE: 76 FR 33619, June 9, 2011, unless otherwise noted.

Subpart A—General

§217.1 Purpose of this part.

This part provides guidance and procedures for use of the Defense Production Act section 101(a) priorities and allocations authority with respect to all forms of energy necessary or appropriate to promote the national defense. (The guidance and procedures in this part are consistent with the guidance and procedures provided in other regulations that, as a whole, form the Federal Priorities and Allocations System. Guidance and procedures for use of the Defense Production Act priorities and allocations authority with respect to other types of resources are provided for: Food resources, food resource facilities, and the domestic distribution of farm equipment and commercial fertilizer; health resources; all forms of civil transportation (49 CFR Part 33); water resources; and all other materials, services, and facilities, including construction materials in the Defense Priorities and Allocations System (DPAS) regulation (15 CFR Part 700).) Department of Energy (DOE) regulations at 10 CFR Part 216 describe and establish the procedures to be used by DOE in considering and making certain findings required by section 101(c)(2)(A) of the Defense Production Act of 1950, as amended.

§217.2 Priorities and allocations authority.

(a) Section 201 of E.O. 12919 (59 FR 29525) delegates the President's authority under section 101 of the Defense Production Act to require acceptance and priority performance of contracts and orders (other than contracts of employment) to promote the national defense over performance of any other contracts or orders, and to allocate materials, services, and facilities as deemed necessary or appropriate to promote the national defense to:

(1) The Secretary of Agriculture with respect to food resources, food resource facilities, and the domestic distribution of farm equipment and commercial fertilizer;

(2) The Secretary of Energy with respect to all forms of energy;

(3) The Secretary of Health and Human Services with respect to health resources;

(4) The Secretary of Transportation with respect to all forms of civil transportation;

(5) The Secretary of Defense with respect to water resources; and

(6) The Secretary of Commerce for all other materials, services, and facilities, including construction materials.

(b) Section 202 of E.O. 12919 states that the priorities and allocations authority delegated in section 201 of this order may be used only to support programs that have been determined in writing as necessary or appropriate to promote the national defense:

(1) By the Secretary of Defense with respect to military production and construction, military assistance to foreign nations, stockpiling, outer space, and directly related activities;

(2) By the Secretary of Energy with respect to energy production and construction, distribution and use, and directly related activities; and

(3) By the Secretary of Homeland Security with respect to essential civilian needs supporting national defense, including civil defense and continuity of government and directly related activities.

§ 217.3 Program eligibility.

Certain programs to promote the national defense are eligible for priorities and allocations support. These include programs for military and energy production or construction, military or critical infrastructure assistance to any foreign nation, deploying and sustaining military forces, homeland security, stockpiling, space, and any directly related activity. Other eligible programs include emergency preparedness activities conducted pursuant to title VI of the Robert T. Stafford Disaster Relief and Emergency Assistance Act (42 U.S.C. 5195 *et seq.*) and critical infrastructure protection and restoration.

Subpart B—Definitions

§ 217.20 Definitions.

The following definitions pertain to all sections of this part:

Allocation order means an official action to control the distribution of materials, services, or facilities for a purpose deemed necessary or appropriate to promote the national defense.

Allotment means an official action that specifies the maximum quantity or use of a material, service, or facility authorized for a specific use to promote the national defense.

Approved program means a program determined by the Secretary of Defense, the Secretary of Energy, or the Secretary of Homeland Security to be necessary or appropriate to promote the national defense, in accordance with section 202 of E.O. 12919.

Civil transportation includes movement of persons and property by all modes of transportation in interstate, intrastate, or foreign commerce within the United States, its territories and possessions, and the District of Columbia, and, without limitation, related public storage and warehousing, ports, services, equipment and facilities, such as transportation carrier shop and repair facilities. However, ''civil transportation'' shall not include transportation owned or controlled by the Department of Defense, use of petroleum and gas pipelines, and coal slurry pipelines used only to supply energy production facilities directly. As applied herein, ''civil transportation'' shall include direction, control, and coordination of civil transportation capacity regardless of ownership.

Construction means the erection, addition, extension, or alteration of any building, structure, or project, using materials or products which are to be an integral and permanent part of the building, structure, or project. Construction does not include maintenance and repair.

Critical infrastructure means any systems and assets, whether physical or cyber-based, so vital to the United States that the degradation or destruction of such systems and assets would have a debilitating impact on national security, including, but not limited to, national economic security and national public health or safety.

Defense Production Act means the Defense Production Act of 1950, as amended (50 U.S.C. App. 2061 *et seq.*).

Delegate Agency means a Federal government agency authorized by delegation from the Department of Energy to place priority ratings on contracts or orders needed to support approved programs.

Directive means an official action that requires a person to take or refrain from taking certain actions in accordance with its provisions.

Emergency preparedness means all those activities and measures designed or undertaken to prepare for or minimize the effects of a hazard upon the civilian population, to deal with the immediate emergency conditions which would be created by the hazard, and to effectuate emergency repairs to, or the emergency restoration of, vital utilities and facilities destroyed or damaged by the hazard. Such term includes the following:

(1) Measures to be undertaken in preparation for anticipated hazards (including the establishment of appropriate organizations, operational plans, and supporting agreements, the recruitment and training of personnel,

the conduct of research, the procurement and stockpiling of necessary materials and supplies, the provision of suitable warning systems, the construction or preparation of shelters, shelter areas, and control centers, and, when appropriate, the nonmilitary evacuation of the civilian population).

(2) Measures to be undertaken during a hazard (including the enforcement of passive defense regulations prescribed by duly established military or civil authorities, the evacuation of personnel to shelter areas, the control of traffic and panic, and the control and use of lighting and civil communications).

(3) Measures to be undertaken following a hazard (including activities for fire fighting, rescue, emergency medical, health and sanitation services, monitoring for specific dangers of special weapons, unexploded bomb reconnaissance, essential debris clearance, emergency welfare measures, and immediately essential emergency repair or restoration of damaged vital facilities).

Energy means all forms of energy including petroleum, gas (both natural and manufactured), electricity, solid fuels (including all forms of coal, coke, coal chemicals, coal liquification, and coal gasification), and atomic energy, and the production, conservation, use, control, and distribution (including pipelines) of all of these forms of energy.

Facilities includes all types of buildings, structures, or other improvements to real property (but excluding farms, churches or other places of worship, and private dwelling houses), and services relating to the use of any such building, structure, or other improvement.

Farm equipment means equipment, machinery, and repair parts manufactured for use on farms in connection with the production or preparation for market use of food resources.

Fertilizer means any product or combination of products that contain one or more of the elements—nitrogen, phosphorus, and potassium—for use as a plant nutrient.

Food resources means all commodities and products, simple, mixed, or compound, or complements to such commodities or products, that are capable of being ingested by either human beings or animals, irrespective of other uses to which such commodities or products may be put, at all stages of processing from the raw commodity to the products thereof in vendible form for human or animal consumption. ''Food resources'' also means all starches, sugars, vegetable and animal or marine fats and oils, cotton, tobacco, wool, mohair, hemp, flax fiber, and naval stores, but does not mean any such material after it loses its identity as an agricultural commodity or agricultural product.

Food resource facilities means plants, machinery, vehicles (including on-farm), and other facilities required for the production, processing, distribution, and storage (including cold storage) of food resources, livestock and poultry feed and seed, and for the domestic distribution of farm equipment and fertilizer (excluding transportation thereof).

Hazard means an emergency or disaster resulting from:

(1) A natural disaster; or

(2) An accidental or human-caused event.

Health resources means drugs, biological products, medical devices, diagnostics, materials, facilities, health supplies, services and equipment required to diagnose, prevent the impairment of, improve, or restore the physical or mental health conditions of the population.

Homeland security includes efforts—

(1) To prevent terrorist attacks within the United States;

(2) To reduce the vulnerability of the United States to terrorism;

(3) To minimize damage from a terrorist attack in the United States; and

(4) To recover from a terrorist attack in the United States.

Industrial resources means all materials, services, and facilities, including construction materials, but not including: food resources, food resource facilities, and the domestic distribution of farm equipment and commercial fertilizer; all forms of energy; health resources; all forms of civil transportation; and water resources.

Item means any raw, in process, or manufactured material, article, commodity, supply, equipment, component, accessory, part, assembly, or product of any kind, technical information, process, or service.

Maintenance and repair and operating supplies or *MRO*—

(1) ''Maintenance'' is the upkeep necessary to continue any plant, facility, or equipment in working condition.

(2) ''Repair'' is the restoration of any plant, facility, or equipment to working condition when it has been rendered unsafe or unfit for service by wear and tear, damage, or failure of parts.

(3) ''Operating supplies'' are any resources carried as operating supplies according to a person's established accounting practice. Operating supplies may include hand tools and expendable tools, jigs, dies, fixtures used on production equipment, lubricants, cleaners, chemicals and other expendable items.

(4) MRO does not include items produced or obtained for sale to other persons or for installation upon or attachment to the property of another person, or items required for the production of such items; items needed for the replacement of any plant, facility, or equipment; or items for the improvement of any plant, facility, or equipment by replacing items which are still in working condition with items of a new or different kind, quality, or design.

Materials includes—

(1) Any raw materials (including minerals, metals, and advanced processed materials), commodities, articles, components (including critical components), products, and items of supply; and

(2) Any technical information or services ancillary to the use of any such materials, commodities, articles, components, products, or items.

(3) Natural resources such as oil and gas.

National defense means programs for military and energy production or construction, military or critical infrastructure assistance to any foreign nation, homeland security, stockpiling, space, and any directly related activity. Such term includes emergency preparedness activities conducted pursuant to title VI of the Robert T. Stafford Disaster Relief and Emergency Assistance Act (42 U.S.C. 5195, *et seq.*) and critical infrastructure protection and restoration.

Official action means an action taken by the Department of Energy or another resource agency under the authority of the Defense Production Act, E.O. 12919, and this part or another regulation under the Federal Priorities and Allocations System. Such actions include the issuance of Rating Authorizations, Directives, Set Asides, Allotments, Letters of Understanding, Memoranda of Understanding, Demands for Information, Inspection Authorizations, and Administrative Subpoenas.

Person includes an individual, corporation, partnership, association, or any other organized group of persons, or legal successor or representative thereof, or any State or local government or agency thereof.

Rated order means a prime contract, a subcontract, or a purchase order in support of an approved program issued in accordance with the provisions of this part.

Resource agency means any agency delegated priorities and allocations authority as specified in § 217.2.

Secretary means the Secretary of Energy.

Services includes any effort that is needed for or incidental to—

(1) The development, production, processing, distribution, delivery, or use of an industrial resource or a critical technology item;

(2) The construction of facilities;

(3) The movement of individuals and property by all modes of civil transportation; or

(4) Other national defense programs and activities.

Set-aside means an official action that requires a person to reserve materials, services, or facilities capacity in anticipation of the receipt of rated orders.

Stafford Act means title VI (Emergency Preparedness) of the Robert T. Stafford Disaster Relief and Emergency Assistance Act, as amended (42 U.S.C. 5195–5197g).

Water resources means all usable water, from all sources, within the jurisdiction of the United States, which can be managed, controlled, and allocated to meet emergency requirements.

Subpart C—Placement of Rated Orders

§ 217.30 Delegations of authority.

(a) The priorities and allocations authorities of the President under Title I of the Defense Production Act with respect to all forms of energy have been delegated to the Secretary of Energy under E.O. 12919 of June 3, 1994 (59 FR 29525).

(b) The Department of Commerce has delegated authority to the Department of Energy to provide for extension of priority ratings for ''industrial resources,'' as provided in § 261.35 of this part, to support rated orders for all forms of energy.

§ 217.31 Priority ratings.

(a) Levels of priority.

(1) There are two levels of priority established by the Energy Priorities and Allocations System regulations, identified by the rating symbols ''DO'' and ''DX''.

(2) All DO-rated orders have equal priority with each other and take precedence over unrated orders. All DX-rated orders have equal priority with each other and take precedence over DO-rated orders and unrated orders. (For resolution of conflicts among rated orders of equal priority, see § 217.34(c).)

(3) In addition, a Directive regarding priority treatment for a given item issued by the Department of Energy for that item takes precedence over any DX-rated order, DO-rated order, or unrated order, as stipulated in the Directive. (For a full discussion of Directives, see § 217.62.)

(b) Program identification symbols. Program identification symbols indicate which approved program is being supported by a rated order. The list of currently approved programs and their identification symbols are listed in Schedule 1, set forth as an appendix to 15 CFR part 700. For example, DO–F3 identifies a domestic energy construction program. Additional programs may be approved under the procedures of E.O. 12919 at any time. Program identification symbols do not connote any priority.

(c) Priority ratings. A priority rating consists of the rating symbol—DO or DX—and the program identification symbol, such as F1, F2, or F3. Thus, a contract for a domestic energy construction program will contain a DO–F3 or DX–F3 priority rating.

§ 217.32 Elements of a rated order.

Each rated order must include:

(a) The appropriate priority rating (*e.g.* DO–F1 or DX–F1)

(b) A required delivery date or dates. The words ''immediately'' or ''as soon as possible'' do not constitute a delivery date. A ''requirements contract'', ''basic ordering agreement'', ''prime vendor contract'', or similar procurement document bearing a priority rating may contain no specific delivery date or dates and may provide for the furnishing of items or service from time to time or within a stated period against specific purchase orders, such as ''calls'', ''requisitions'', and ''delivery orders''. These purchase orders must specify a required delivery date or dates and are to be considered as rated as of the date of their receipt by the supplier and not as of the date of the original procurement document;

(c) The written signature on a manually placed order, or the digital signature or name on an electronically placed order, of an individual authorized to sign rated orders for the person placing the order. The signature or use of the name certifies that the rated order is authorized under this part and that the requirements of this part are being followed; and

(d)(1) A statement that reads in substance:

This is a rated order certified for national defense use, and you are required to follow all the provisions of the Energy Priorities and Allocations System regulation at 10 CFR part 217.

(2) If the rated order is placed in support of emergency preparedness requirements and expedited action is necessary and appropriate to meet these requirements, the following sentences should be added following the

statement set forth in paragraph (d)(1) of this section:

This rated order is placed for the purpose of emergency preparedness. It must be accepted or rejected within 2 days after receipt of the order if (1) The order is issued in response to a hazard that has occurred; or

(2) If the order is issued to prepare for an imminent hazard, as specified in EPAS Section 217.33(e), 10 CFR 217.33(e).

§ 217.33 Acceptance and rejection of rated orders.

(a) *Mandatory acceptance.* (1) Except as otherwise specified in this section, a person shall accept every rated order received and must fill such orders regardless of any other rated or unrated orders that have been accepted.

(2) A person shall not discriminate against rated orders in any manner such as by charging higher prices or by imposing different terms and conditions than for comparable unrated orders.

(b) *Mandatory rejection.* Unless otherwise directed by the Department of Energy for a rated order involving all forms of energy:

(1) A person shall not accept a rated order for delivery on a specific date if unable to fill the order by that date. However, the person must inform the customer of the earliest date on which delivery can be made and offer to accept the order on the basis of that date. Scheduling conflicts with previously accepted lower rated or unrated orders are not sufficient reason for rejection under this section.

(2) A person shall not accept a DO-rated order for delivery on a date which would interfere with delivery of any previously accepted DO- or DX-rated orders. However, the person must offer to accept the order based on the earliest delivery date otherwise possible.

(3) A person shall not accept a DX-rated order for delivery on a date which would interfere with delivery of any previously accepted DX-rated orders, but must offer to accept the order based on the earliest delivery date otherwise possible.

(4) If a person is unable to fill all of the rated orders of equal priority status received on the same day, the person must accept, based upon the earliest delivery dates, only those orders which can be filled, and reject the other orders. For example, a person must accept order A requiring delivery on December 15 before accepting order B requiring delivery on December 31. However, the person must offer to accept the rejected orders based on the earliest delivery dates otherwise possible.

(c) *Optional rejection.* Unless otherwise directed by the Department of Energy for a rated order involving all forms of energy, rated orders may be rejected in any of the following cases as long as a supplier does not discriminate among customers:

(1) If the person placing the order is unwilling or unable to meet regularly established terms of sale or payment;

(2) If the order is for an item not supplied or for a service not capable of being performed;

(3) If the order is for an item or service produced, acquired, or provided only for the supplier's own use for which no orders have been filled for two years prior to the date of receipt of the rated order. If, however, a supplier has sold some of these items or provided similar services, the supplier is obligated to accept rated orders up to that quantity or portion of production or service, whichever is greater, sold or provided within the past two years;

(4) If the person placing the rated order, other than the U.S. Government, makes the item or performs the service being ordered;

(5) If acceptance of a rated order or performance against a rated order would violate any other regulation, official action, or order of the Department of Energy, issued under the authority of the Defense Production Act or another relevant statute.

(d) *Customer notification requirements.* (1) Except as provided in this paragraph, a person must accept or reject a rated order in writing or electronically within fifteen (15) working days after receipt of a DO rated order and within ten (10) working days after receipt of a DX rated order. If the order is rejected, the person must give reasons in writing or electronically for the rejection.

(2) If a person has accepted a rated order and subsequently finds that shipment or performance will be delayed, the person must notify the customer immediately, give the reasons for the delay, and advise of a new shipment or performance date. If notification is given verbally, written or electronic confirmation must be provided within five (5) working days.

(e) *Exception for emergency preparedness conditions.* If the rated order is placed for the purpose of emergency preparedness, a person must accept or reject a rated order and transmit the acceptance or rejection in writing or in an electronic format within 2 days after receipt of the order if:

(1) The order is issued in response to a hazard that has occurred; or

(2) The order is issued to prepare for an imminent hazard.

§ 217.34 Preferential scheduling.

(a) A person must schedule operations, including the acquisition of all needed production items or services, in a timely manner to satisfy the delivery requirements of each rated order. Modifying production or delivery schedules is necessary only when required delivery dates for rated orders cannot otherwise be met.

(b) DO-rated orders must be given production preference over unrated orders, if necessary to meet required delivery dates, even if this requires the diversion of items being processed or ready for delivery or services being performed against unrated orders. Similarly, DX-rated orders must be given preference over DO-rated orders and unrated orders. (Examples: If a person receives a DO-rated order with a delivery date of June 3 and if meeting that date would mean delaying production or delivery of an item for an unrated order, the unrated order must be delayed. If a DX-rated order is received calling for delivery on July 15 and a person has a DO-rated order requiring delivery on June 2 and operations can be scheduled to meet both deliveries, there is no need to alter production schedules to give any additional preference to the DX-rated order.)

(c) Conflicting rated orders.

(1) If a person finds that delivery or performance against any accepted rated orders conflicts with the delivery or performance against other accepted rated orders of equal priority status, the person shall give precedence to the conflicting orders in the sequence in which they are to be delivered or performed (not to the receipt dates). If the conflicting orders are scheduled to be delivered or performed on the same day, the person shall give precedence to those orders that have the earliest receipt dates.

(2) If a person is unable to resolve rated order delivery or performance conflicts under this section, the person should promptly seek special priorities assistance as provided in §§ 217.40 through 217.44. If the person's customer objects to the rescheduling of delivery or performance of a rated order, the customer should promptly seek special priorities assistance as provided in §§ 217.40 through 217.44. For any rated order against which delivery or performance will be delayed, the person must notify the customer as provided in § 217.33.

(d) If a person is unable to purchase needed production items in time to fill a rated order by its required delivery date, the person must fill the rated order by using inventoried production items. A person who uses inventoried items to fill a rated order may replace those items with the use of a rated order as provided in § 217.37(b).

§ 217.35 Extension of priority ratings.

(a) A person must use rated orders with suppliers to obtain items or services needed to fill a rated order. The person must use the priority rating indicated on the customer's rated order, except as otherwise provided in this part or as directed by the Department of Energy. For example, if a person is in receipt of a DO–F1 rated order for an electric power sub-station, and needs to purchase a transformer for its manufacture, that person must use a DO–F1 rated order to obtain the needed transformer.

(b) The priority rating must be included on each successive order placed to obtain items or services needed to

fill a customer's rated order. This continues from contractor to subcontractor to supplier throughout the entire procurement chain.

§ 217.36 Changes or cancellations of priority ratings and rated orders.

(a) The priority rating on a rated order may be changed or canceled by:

(1) An official action of the Department of Energy; or

(2) Written notification from the person who placed the rated order.

(b) If an unrated order is amended so as to make it a rated order, or a DO rating is changed to a DX rating, the supplier must give the appropriate preferential treatment to the order as of the date the change is received by the supplier.

(c) An amendment to a rated order that significantly alters a supplier's original production or delivery schedule shall constitute a new rated order as of the date of its receipt. The supplier must accept or reject the amended order according to the provisions of § 217.33.

(d) The following amendments do not constitute a new rated order: a change in shipping destination; a reduction in the total amount of the order; an increase in the total amount of the order which has negligible impact upon deliveries; a minor variation in size or design; or a change which is agreed upon between the supplier and the customer.

(e) If a person no longer needs items or services to fill a rated order, any rated orders placed with suppliers for the items or services, or the priority rating on those orders, must be canceled.

(f) When a priority rating is added to an unrated order, or is changed or canceled, all suppliers must be promptly notified in writing.

§ 217.37 Use of rated orders.

(a) A person must use rated orders to obtain:

(1) Items which will be physically incorporated into other items to fill rated orders, including that portion of such items normally consumed or converted into scrap or by-products in the course of processing;

(2) Containers or other packaging materials required to make delivery of the finished items against rated orders;

(3) Services, other than contracts of employment, needed to fill rated orders; and

(4) MRO needed to produce the finished items to fill rated orders.

(b) A person may use a rated order to replace inventoried items (including finished items) if such items were used to fill rated orders, as follows:

(1) The order must be placed within 90 days of the date of use of the inventory.

(2) A DO rating and the program identification symbol indicated on the customer's rated order must be used on the order. A DX rating may not be used even if the inventory was used to fill a DX-rated order.

(3) If the priority ratings on rated orders from one customer or several customers contain different program identification symbols, the rated orders may be combined. In this case, the program identification symbol ''H1'' must be used (*i.e.*, DO–H1).

(c) A person may combine DX- and DO-rated orders from one customer or several customers if the items or services covered by each level of priority are identified separately and clearly. If different program identification symbols are indicated on those rated orders of equal priority, the person must use the program identification symbol ''H1'' (*i.e.*, DO–H1 or DX–H1).

(d) Combining rated and unrated orders.

(1) A person may combine rated and unrated order quantities on one purchase order provided that:

(i) The rated quantities are separately and clearly identified; and

(ii) The four elements of a rated order, as required by § 217.32, are included on the order with the statement required in § 217.32(d) modified to read in substance:

This purchase order contains rated order quantities certified for national defense use, and you are required to follow all applicable provisions of the Energy Priorities and Allocations System regulations at 10 CFR part 217 only as it pertains to the rated quantities.

(2) A supplier must accept or reject the rated portion of the purchase order

as provided in § 217.33 and give preferential treatment only to the rated quantities as required by this part. This part may not be used to require preferential treatment for the unrated portion of the order.

(3) Any supplier who believes that rated and unrated orders are being combined in a manner contrary to the intent of this part or in a fashion that causes undue or exceptional hardship may submit a request for adjustment or exception under § 217.80.

(e) A person may place a rated order for the minimum commercially procurable quantity even if the quantity needed to fill a rated order is less than that minimum. However, a person must combine rated orders as provided in paragraph (c) of this section, if possible, to obtain minimum procurable quantities.

(f) A person is not required to place a priority rating on an order for less than $50,000, or one-half of the Simplified Acquisition Threshold (as established in the Federal Acquisition Regulation (FAR) (see FAR section 2.101) or in other authorized acquisition regulatory or management systems) whichever amount is greater, provided that delivery can be obtained in a timely fashion without the use of the priority rating.

§ 217.38 Limitations on placing rated orders.

(a) General limitations.

(1) A person may not place a DO- or DX-rated order unless entitled to do so under this part.

(2) Rated orders may not be used to obtain:

(i) Delivery on a date earlier than needed;

(ii) A greater quantity of the item or services than needed, except to obtain a minimum procurable quantity. Separate rated orders may not be placed solely for the purpose of obtaining minimum procurable quantities on each order;

(iii) Items or services in advance of the receipt of a rated order, except as specifically authorized by the Department of Energy (see § 217.41(c) for information on obtaining authorization for a priority rating in advance of a rated order);

(iv) Items that are not needed to fill a rated order, except as specifically authorized by the Department of Energy, or as otherwise permitted by this part; or

(v) Any of the following items unless specific priority rating authority has been obtained from the Department of Energy, a Delegate Agency, or the Department of Commerce, as appropriate:

(A) Items for plant improvement, expansion, or construction, unless they will be physically incorporated into a construction project covered by a rated order; and

(B) Production or construction equipment or items to be used for the manufacture of production equipment. [For information on requesting priority rating authority, see § 217.21.]

(vi) Any items related to the development of chemical or biological warfare capabilities or the production of chemical or biological weapons, unless such development or production has been authorized by the President or the Secretary of Defense.

(b) Jurisdictional limitations.

(1) Unless authorized by the resource agency with jurisdiction, the provisions of this part are not applicable to the following resources:

(i) Food resources, food resource facilities, and the domestic distribution of farm equipment and commercial fertilizer (Resource agency with jurisdiction—Department of Agriculture);

(ii) Health resources (Resource agency with jurisdiction—Department of Health and Human Services);

(iii) All forms of civil transportation (Resource agency with jurisdiction—Department of Transportation);

(iv) Water resources (Resource agency with jurisdiction—Department of Defense/U.S. Army Corps of Engineers); and

(v) Communications services (Resource agency with jurisdiction—National Communications System under E. O. 12472 of April 3, 1984).

Subpart D—Special Priorities Assistance

§ 217.40 General provisions.

(a) The EPAS is designed to be largely self-executing. However, from time-

to-time production or delivery problems will arise. In this event, a person should immediately contact the Office of Infrastructure Security and Energy Restoration, for guidance or assistance (Contact the Senior Policy Advisor for the Office of Electricity Delivery and Energy Reliability, as listed in § 217.93). If the problem(s) cannot otherwise be resolved, special priorities assistance should be sought from the Department of Energy through the Office of Infrastructure Security and Energy Restoration (Contact the Senior Policy Advisor for the Office of Electricity Delivery and Energy Reliability, as listed in § 217.93). If the Department of Energy is unable to resolve the problem or to authorize the use of a priority rating and believes additional assistance is warranted, the Department of Energy may forward the request to another agency with resource jurisdiction, as appropriate, for action. Special priorities assistance is provided to alleviate problems that do arise.

(b) Special priorities assistance is available for any reason consistent with this part. Generally, special priorities assistance is provided to expedite deliveries, resolve delivery conflicts, place rated orders, locate suppliers, or to verify information supplied by customers and vendors. Special priorities assistance may also be used to request rating authority for items that are not normally eligible for priority treatment.

(c) A request for special priorities assistance or priority rating authority must be submitted on Form DOE F 544 (05–11) (OMB control number 1910–5159) to the Senior Policy Advisor for the Office of Electricity Delivery and Energy Reliability, as listed in § 217.93. Form DOE F 544 (05–11) may be obtained from the Department of Energy or a Delegate Agency. A sample Form DOE F 544 (05–11) is attached at appendix I to this part.

§ 217.41 Requests for priority rating authority.

(a) If a rated order is likely to be delayed because a person is unable to obtain items or services not normally rated under this part, the person may request the authority to use a priority rating in ordering the needed items or services.

(b) Rating authority for production or construction equipment.

(1) A request for priority rating authority for production or construction equipment must be submitted to the U.S. Department of Commerce on Form BIS–999.

(2) When the use of a priority rating is authorized for the procurement of production or construction equipment, a rated order may be used either to purchase or to lease such equipment. However, in the latter case, the equipment may be leased only from a person engaged in the business of leasing such equipment or from a person willing to lease rather than sell.

(c) Rating authority in advance of a rated prime contract. (1) In certain cases and upon specific request, the Department of Energy, in order to promote the national defense, may authorize or request the Department of Commerce to authorize, as appropriate, a person to place a priority rating on an order to a supplier in advance of the issuance of a rated prime contract. In these instances, the person requesting advance rating authority must obtain sponsorship of the request from the Department of Energy or the appropriate Delegate Agency. The person shall also assume any business risk associated with the placing of rated orders in the event the rated prime contract is not issued.

(2) The person must state the following in the request:

It is understood that the authorization of a priority rating in advance of our receiving a rated prime contract from the Department of Energy and our use of that priority rating with our suppliers in no way commits the Department of Energy, the Department of Commerce, or any other government agency to enter into a contract or order or to expend funds. Further, we understand that the Federal Government shall not be liable for any cancellation charges, termination costs, or other damages that may accrue if a rated prime contract is not eventually placed and, as a result, we must subsequently cancel orders placed with the use of the priority rating authorized as a result of this request.

(3) In reviewing requests for rating authority in advance of a rated prime contract, the Department of Energy or the Department of Commerce, as appropriate, will consider, among other things, the following criteria:

(i) The probability that the prime contract will be awarded;

(ii) The impact of the resulting rated orders on suppliers and on other authorized programs;

(iii) Whether the contractor is the sole source;

(iv) Whether the item being produced has a long lead time;

(v) The time period for which the rating is being requested.

(4) The Department of Energy or the Department of Commerce, as appropriate, may require periodic reports on the use of the rating authority granted under paragraph (c) of this section.

(5) If a rated prime contract is not issued, the person shall promptly notify all suppliers who have received rated orders pursuant to the advanced rating authority that the priority rating on those orders is cancelled.

§ 217.42 Examples of assistance.

(a) While special priorities assistance may be provided for any reason in support of this part, it is usually provided in situations where:

(1) A person is experiencing difficulty in obtaining delivery against a rated order by the required delivery date; or

(2) A person cannot locate a supplier for an item or service needed to fill a rated order.

(b) Other examples of special priorities assistance include:

(1) Ensuring that rated orders receive preferential treatment by suppliers;

(2) Resolving production or delivery conflicts between various rated orders;

(3) Assisting in placing rated orders with suppliers;

(4) Verifying the urgency of rated orders; and

(5) Determining the validity of rated orders.

§ 217.43 Criteria for assistance.

Requests for special priorities assistance should be timely, *i.e.*, the request has been submitted promptly and enough time exists for the Department of Energy, the Delegate Agency, or the Department of Commerce for industrial resources to effect a meaningful resolution to the problem, and must establish that:

(a) There is an urgent need for the item; and

(b) The applicant has made a reasonable effort to resolve the problem.

§ 217.44 Instances where assistance may not be provided.

Special priorities assistance is provided at the discretion of the Department of Energy, the Delegate Agencies, or the Department of Commerce when it is determined that such assistance is warranted to meet the objectives of this part. Examples where assistance may not be provided include situations when a person is attempting to:

(a) Secure a price advantage;

(b) Obtain delivery prior to the time required to fill a rated order;

(c) Gain competitive advantage;

(d) Disrupt an industry apportionment program in a manner designed to provide a person with an unwarranted share of scarce items; or

(e) Overcome a supplier's regularly established terms of sale or conditions of doing business.

Subpart E—Allocation Actions

§ 217.50 Policy.

(a) It is the policy of the Federal Government that the allocations authority under title I of the Defense Production Act may:

(1) Only be used when there is insufficient supply of a material, service, or facility to satisfy national defense supply requirements through the use of the priorities authority or when the use of the priorities authority would cause a severe and prolonged disruption in the supply of materials, services, or facilities available to support normal U.S. economic activities; and

(2) Not be used to ration materials or services at the retail level.

(b) Allocation orders, when used, will be distributed equitably among the suppliers of the materials, services, or facilities being allocated and not require any person to relinquish a disproportionate share of the civilian market.

§ 217.51 General procedures.

When the Department of Energy plans to execute its allocations authority to address a supply problem within its resource jurisdiction, the Department shall develop a plan that includes the following information:

(a) A copy of the written determination made, in accordance with section 202 of E.O. 12919, that the program or programs that would be supported by the allocation action are necessary or appropriate to promote the national defense;

(b) A detailed description of the situation to include any unusual events or circumstances that have created the requirement for an allocation action;

(c) A statement of the specific objective(s) of the allocation action;

(d) A list of the materials, services, or facilities to be allocated;

(e) A list of the sources of the materials, services, or facilities that will be subject to the allocation action;

(f) A detailed description of the provisions that will be included in the allocation orders, including the type(s) of allocation orders, the percentages or quantity of capacity or output to be allocated for each purpose, and the duration of the allocation action (*i.e.*, anticipated start and end dates);

(g) An evaluation of the impact of the proposed allocation action on the civilian market; and

(h) Proposed actions, if any, to mitigate disruptions to civilian market operations.

§ 217.52 Controlling the general distribution of a material in the civilian market.

No allocation action by the Department of Energy may be used to control the general distribution of a material in the civilian market, unless the Secretary of the Department of Energy has:

(a) Made a written finding that:

(1) Such material is a scarce and critical material essential to the national defense, and

(2) The requirements of the national defense for such material cannot otherwise be met without creating a significant dislocation of the normal distribution of such material in the civilian market to such a degree as to create appreciable hardship;

(b) Submitted the finding for the President's approval through the Assistant to the President for National Security Affairs; and

(c) The President has approved the finding.

§ 217.53 Types of allocation orders.

There are three types of allocation orders available for communicating allocation actions. These are:

(a) *Set-aside:* an official action that requires a person to reserve materials, services, or facilities capacity in anticipation of the receipt of rated orders;

(b) *Directive:* an official action that requires a person to take or refrain from taking certain actions in accordance with its provisions. For example, a directive can require a person to: stop or reduce production of an item; prohibit the use of selected materials, services, or facilities; or divert the use of materials, services, or facilities from one purpose to another; and

(c) *Allotment:* an official action that specifies the maximum quantity of a material, service, or facility authorized for a specific use.

§ 217.54 Elements of an allocation order.

Each allocation order must include:

(a) A detailed description of the required allocation action(s);

(b) Specific start and end calendar dates for each required allocation action;

(c) The written signature on a manually placed order, or the digital signature or name on an electronically placed order, of the Secretary of Energy. The signature or use of the name certifies that the order is authorized under this part and that the requirements of this part are being followed;

(d) A statement that reads in substance: ''This is an allocation order certified for national defense use. [Insert the legal name of the person receiving the order] is required to comply with this order, in accordance with the provisions of the Energy Priorities and Allocations System regulation (10

CFR part 217), which is part of the Federal Priorities and Allocations System''; and

(e) A current copy of the Energy Priorities and Allocations System regulation (10 CFR part 217).

§ 217.55 Mandatory acceptance of an allocation order.

(a) Except as otherwise specified in this section, a person shall accept and comply with every allocation order received.

(b) A person shall not discriminate against an allocation order in any manner such as by charging higher prices for materials, services, or facilities covered by the order or by imposing terms and conditions for contracts and orders involving allocated materials, services, or facilities that differ from the person's terms and conditions for contracts and orders for the materials, services, or facilities prior to receiving the allocation order.

(c) If a person is unable to comply fully with the required action(s) specified in an allocation order, the person must notify the Department of Energy immediately, explain the extent to which compliance is possible, and give the reasons why full compliance is not possible. If notification is given verbally, written or electronic confirmation must be provided within five (5) working days. Such notification does not release the person from complying with the order to the fullest extent possible, until the person is notified by the Department of Energy that the order has been changed or cancelled.

§ 217.56 Changes or cancellations of an allocation order.

An allocation order may be changed or canceled by an official action of the Department of Energy.

Subpart F—Official Actions

§ 217.60 General provisions.

(a) The Department of Energy may take specific official actions to implement the provisions of this part.

(b) These official actions include Rating Authorizations, Directives, and Memoranda of Understanding.

§ 217.61 Rating Authorizations.

(a) A Rating Authorization is an official action granting specific priority rating authority that:

(1) Permits a person to place a priority rating on an order for an item or service not normally ratable under this part; or

(2) Authorizes a person to modify a priority rating on a specific order or series of contracts or orders.

(b) To request priority rating authority, see § 217.41.

§ 217.62 Directives.

(a) A Directive is an official action that requires a person to take or refrain from taking certain actions in accordance with its provisions.

(b) A person must comply with each Directive issued. However, a person may not use or extend a Directive to obtain any items from a supplier, unless expressly authorized to do so in the Directive.

(c) A Priorities Directive takes precedence over all DX-rated orders, DO-rated orders, and unrated orders previously or subsequently received, unless a contrary instruction appears in the Directive.

(d) An Allocations Directive takes precedence over all Priorities Directives, DX-rated orders, DO-rated orders, and unrated orders previously or subsequently received, unless a contrary instruction appears in the Directive.

§ 217.63 Letters and Memoranda of Understanding.

(a) A Letter or Memorandum of Understanding is an official action that may be issued in resolving special priorities assistance cases to reflect an agreement reached by all parties (the Department of Energy, the Department of Commerce (if applicable), a Delegate Agency (if applicable), the supplier, and the customer).

(b) A Letter or Memorandum of Understanding is not used to alter scheduling between rated orders, to authorize the use of priority ratings, to impose restrictions under this part. Rather, Letters or Memoranda of Understanding are used to confirm production or shipping schedules that do not

require modifications to other rated orders.

Subpart G—Compliance

§ 217.70 General provisions.

(a) The Department of Energy may take specific official actions for any reason necessary or appropriate to the enforcement or the administration of the Defense Production Act and other applicable statutes, this part, or an official action. Such actions include Administrative Subpoenas, Demands for Information, and Inspection Authorizations.

(b) Any person who places or receives a rated order or an allocation order must comply with the provisions of this part.

(c) Willful violation of the provisions of title I or section 705 of the Defense Production Act and other applicable statutes, this part, or an official action of the Department of Energy is a criminal act, punishable as provided in the Defense Production Act and other applicable statutes, and as set forth in § 217.74 of this part.

§ 217.71 Audits and investigations.

(a) Audits and investigations are official examinations of books, records, documents, other writings and information to ensure that the provisions of the Defense Production Act and other applicable statutes, this part, and official actions have been properly followed. An audit or investigation may also include interviews and a systems evaluation to detect problems or failures in the implementation of this part.

(b) When undertaking an audit or investigation, the Department of Energy shall:

(1) Define the scope and purpose in the official action given to the person under investigation, and

(2) Have ascertained that the information sought or other adequate and authoritative data are not available from any Federal or other responsible agency.

(c) In administering this part, the Department of Energy may issue the following documents that constitute official actions:

(1) Administrative Subpoenas. An Administrative Subpoena requires a person to appear as a witness before an official designated by the Department of Energy to testify under oath on matters of which that person has knowledge relating to the enforcement or the administration of the Defense Production Act and other applicable statutes, this part, or official actions. An Administrative Subpoena may also require the production of books, papers, records, documents and physical objects or property.

(2) Demands for Information. A Demand for Information requires a person to furnish to a duly authorized representative of the Department of Energy any information necessary or appropriate to the enforcement or the administration of the Defense Production Act and other applicable statutes, this part, or official actions.

(3) Inspection Authorizations. An Inspection Authorization requires a person to permit a duly authorized representative of the Department of Energy to interview the person's employees or agents, to inspect books, records, documents, other writings, and information, including electronically-stored information, in the person's possession or control at the place where that person usually keeps them or otherwise, and to inspect a person's property when such interviews and inspections are necessary or appropriate to the enforcement or the administration of the Defense Production Act and related statutes, this part, or official actions.

(d) The production of books, records, documents, other writings, and information will not be required at any place other than where they are usually kept if, prior to the return date specified in the Administrative Subpoena or Demand for Information, a duly authorized official of the Department of Energy is furnished with copies of such material that are certified under oath to be true copies. As an alternative, a person may enter into a stipulation with a duly authorized official of Department of Energy as to the content of the material.

(e) An Administrative Subpoena, Demand for Information, or Inspection Authorization, shall include the name,

title, or official position of the person to be served, the evidence sought to be adduced, and its general relevance to the scope and purpose of the audit, investigation, or other inquiry. If employees or agents are to be interviewed; if books, records, documents, other writings, or information are to be produced; or if property is to be inspected; the Administrative Subpoena, Demand for Information, or Inspection Authorization will describe them with particularity.

(f) Service of documents shall be made in the following manner:

(1) Service of a Demand for Information or Inspection Authorization shall be made personally, or by Certified Mail-Return Receipt Requested at the person's last known address. Service of an Administrative Subpoena shall be made personally. Personal service may also be made by leaving a copy of the document with someone at least 18 years old at the person's last known dwelling or place of business.

(2) Service upon other than an individual may be made by serving a partner, corporate officer, or a managing or general agent authorized by appointment or by law to accept service of process. If an agent is served, a copy of the document shall be mailed to the person named in the document.

(3) Any individual 18 years of age or over may serve an Administrative Subpoena, Demand for Information, or Inspection Authorization. When personal service is made, the individual making the service shall prepare an affidavit as to the manner in which service was made and the identity of the person served, and return the affidavit, and in the case of subpoenas, the original document, to the issuing officer. In case of failure to make service, the reasons for the failure shall be stated on the original document.

§ 217.72 Compulsory process.

(a) If a person refuses to permit a duly authorized representative of the Department of Energy to have access to any premises or source of information necessary to the administration or the enforcement of the Defense Production Act and other applicable statutes, this part, or official actions, the Department of Energy representative may seek compulsory process. Compulsory process means the institution of appropriate legal action, including ex parte application for an inspection warrant or its equivalent, in any forum of appropriate jurisdiction.

(b) Compulsory process may be sought in advance of an audit, investigation, or other inquiry, if, in the judgment of the Senior Policy Advisor for the Office of Electricity Delivery and Energy Reliability, as listed in § 217.93, there is reason to believe that a person will refuse to permit an audit, investigation, or other inquiry, or that other circumstances exist which make such process desirable or necessary.

§ 217.73 Notification of failure to comply.

(a) At the conclusion of an audit, investigation, or other inquiry, or at any other time, the Department of Energy may inform the person in writing where compliance with the requirements of the Defense Production Act and other applicable statutes, this part, or an official action were not met.

(b) In cases where the Department of Energy determines that failure to comply with the provisions of the Defense Production Act and other applicable statutes, this part, or an official action was inadvertent, the person may be informed in writing of the particulars involved and the corrective action to be taken. Failure to take corrective action may then be construed as a willful violation of the Defense Production Act and other applicable statutes, this part, or an official action.

§ 217.74 Violations, penalties, and remedies.

(a) Willful violation of the provisions of title I or sections 705 or 707 of the Defense Production Act, the priorities provisions of the Selective Service Act and related statutes (when applicable), this part, or an official action, is a crime and upon conviction, a person may be punished by fine or imprisonment, or both. The maximum penalties provided by the Defense Production Act are a $10,000 fine, or one year in prison, or both. The maximum penalties provided by the Selective Service

Act and related statutes are a $50,000 fine, or three years in prison, or both.

(b) The Government may also seek an injunction from a court of appropriate jurisdiction to prohibit the continuance of any violation of, or to enforce compliance with, the Defense Production Act, this part, or an official action.

(c) In order to secure the effective enforcement of the Defense Production Act and other applicable statutes, this part, and official actions, the following are prohibited:

(1) No person may solicit, influence or permit another person to perform any act prohibited by, or to omit any act required by, the Defense Production Act and other applicable statutes, this part, or an official action.

(2) No person may conspire or act in concert with any other person to perform any act prohibited by, or to omit any act required by, the Defense Production Act and other applicable statutes, this part, or an official action.

(3) No person shall deliver any item if the person knows or has reason to believe that the item will be accepted, redelivered, held, or used in violation of the Defense Production Act and other applicable statutes, this part, or an official action. In such instances, the person must immediately notify the Department of Energy that, in accordance with this provision, delivery has not been made.

§ 217.75 Compliance conflicts.

If compliance with any provision of the Defense Production Act and other applicable statutes, this part, or an official action would prevent a person from filling a rated order or from complying with another provision of the Defense Production Act and other applicable statutes, this part, or an official action, the person must immediately notify the Department of Energy for resolution of the conflict.

Subpart H—Adjustments, Exceptions, and Appeals

§ 217.80 Adjustments or exceptions.

(a) A person may submit a request to the Senior Policy Advisor for the Office of Electricity Delivery and Energy Reliability, as listed in § 217.93, for an adjustment or exception on the ground that:

(1) A provision of this part or an official action results in an undue or exceptional hardship on that person not suffered generally by others in similar situations and circumstances; or

(2) The consequences of following a provision of this part or an official action is contrary to the intent of the Defense Production Act and other applicable statutes, or this part.

(b) Each request for adjustment or exception must be in writing and contain a complete statement of all the facts and circumstances related to the provision of this part or official action from which adjustment is sought and a full and precise statement of the reasons why relief should be provided.

(c) The submission of a request for adjustment or exception shall not relieve any person from the obligation of complying with the provision of this part or official action in question while the request is being considered unless such interim relief is granted in writing by the Senior Policy Advisor for the Office of Electricity Delivery and Energy Reliability, as listed in § 217.93.

(d) A decision of the Senior Policy Advisor for the Office of Electricity Delivery and Energy Reliability, as listed in § 217.93, under this section may be appealed to the Office of Infrastructure Security and Energy Restoration (For information on the appeal procedure, see § 217.81.)

§ 217.81 Appeals.

(a) Any person who has had a request for adjustment or exception denied by the Senior Policy Advisor for the Office of Electricity Delivery and Energy Reliability, as listed in section 217.93, under § 217.80, may appeal to the Office of Infrastructure Security and Energy Restoration who shall review and reconsider the denial.

(b)(1) Except as provided in this paragraph (b)(2), an appeal must be received by the Office of Infrastructure Security and Energy Restoration no later than 45 days after receipt of a written notice of denial from the Senior Policy Advisor for the Office of Electricity Delivery and Energy Reliability, as listed in § 217.93. After this 45-day period, an appeal may be accepted at the discretion

of the Office of Infrastructure Security and Energy Restoration for good cause shown.

(2) For requests for adjustment or exception involving rated orders placed for the purpose of emergency preparedness (see 217.14(d)), an appeal must be received by the Office of Infrastructure Security and Energy Restoration, no later than 15 days after receipt of a written notice of denial from the Senior Policy Advisor for the Office of Electricity Delivery and Energy Reliability, as listed in § 217.93. Contract performance under the order shall not be stayed pending resolution of the appeal.

(c) Each appeal must be in writing and contain a complete statement of all the facts and circumstances related to the action appealed from and a full and precise statement of the reasons the decision should be modified or reversed.

(d) In addition to the written materials submitted in support of an appeal, an appellant may request, in writing, an opportunity for an informal hearing. This request may be granted or denied at the discretion of the Office of Infrastructure Security and Energy Restoration.

(e) When a hearing is granted, the Office of Infrastructure Security and Energy Restoration may designate an employee to conduct the hearing and to prepare a report. The hearing officer shall determine all procedural questions and impose such time or other limitations deemed reasonable. In the event that the hearing officer decides that a printed transcript is necessary, all expenses shall be borne by the appellant.

(f) When determining an appeal, the Office of Infrastructure Security and Energy Restoration may consider all information submitted during the appeal as well as any recommendations, reports, or other relevant information and documents available to the Department of Energy or consult with any other persons or groups.

(g) The submission of an appeal under this section shall not relieve any person from the obligation of complying with the provision of this part or official action in question while the appeal is being considered unless such relief is granted in writing by the Office of Infrastructure Security and Energy Restoration.

(h) The decision of the Office of Infrastructure Security and Energy Restoration shall be made within five (5) days after receipt of the appeal, or within one (1) day for appeals pertaining to emergency preparedness and shall be the final administrative action. It shall be issued to the appellant in writing with a statement of the reasons for the decision.

Subpart I—Miscellaneous Provisions

§ 217.90 Protection against claims.

A person shall not be held liable for damages or penalties for any act or failure to act resulting directly or indirectly from compliance with any provision of this part, or an official action, notwithstanding that such provision or action shall subsequently be declared invalid by judicial or other competent authority.

§ 217.91 Records and reports.

(a) Persons are required to make and preserve for at least three years, accurate and complete records of any transaction covered by this part or an official action.

(b) Records must be maintained in sufficient detail to permit the determination, upon examination, of whether each transaction complies with the provisions of this part or any official action. However, this part does not specify any particular method or system to be used.

(c) Records required to be maintained by this part must be made available for examination on demand by duly authorized representatives of the Department of Energy as provided in § 217.71.

(d) In addition, persons must develop, maintain, and submit any other records and reports to the Department of Energy that may be required for the administration of the Defense Production Act and other applicable statutes, and this part.

(e) Section 705(d) of the Defense Production Act, as implemented by E.O. 12919, provides that information obtained under this section which the Secretary deems confidential, or with

reference to which a request for confidential treatment is made by the person furnishing such information, shall not be published or disclosed unless the Secretary determines that the withholding of this information is contrary to the interest of the national defense. Information required to be submitted to the Department of Energy in connection with the enforcement or administration of the Defense Production Act, this part, or an official action, is deemed to be confidential under section 705(d) of the Defense Production Act and shall be handled in accordance with applicable Federal law.

§ 217.92 Applicability of this part and official actions.

(a) This part and all official actions, unless specifically stated otherwise, apply to transactions in any state, territory, or possession of the United States and the District of Columbia.

(b) This part and all official actions apply not only to deliveries to other persons but also include deliveries to affiliates and subsidiaries of a person and deliveries from one branch, division, or section of a single entity to another branch, division, or section under common ownership or control.

(c) This part and its schedules shall not be construed to affect any administrative actions taken by the Department of Energy, or any outstanding contracts or orders placed pursuant to any of the regulations, orders, schedules or delegations of authority previously issued by the Department of Energy pursuant to authority granted to the President in the Defense Production Act. Such actions, contracts, or orders shall continue in full force and effect under this part unless modified or terminated by proper authority.

§ 217.93 Communications.

All communications concerning this part, including requests for copies of the regulation and explanatory information, requests for guidance or clarification, and requests for adjustment or exception shall be addressed to the Senior Policy Advisor for the Office of Electricity Delivery and Energy Reliability, Office of Infrastructure Security and Energy Restoration, U.S. Department of Energy, 1000 Independence Ave., SW., Washington, DC 20585; (202) 536–0379 (*GC–76EPAS@hq.doe.gov*).

APPENDIX I TO PART 217—SAMPLE FORM DOE F 544 (05–11)

FORM DOE F 544 (05-11) DEPARTMENT OF ENERGY OFFICE OF ELECTRICITY	FOR DOE USE OMB NO.1910-5159
REQUEST FOR SPECIAL PRIORITIES ASSISTANCE READ INSTRUCTIONS ON LAST PAGE FILL OUT USING COMPUTER	CASE NO._____ RECEIVED_____ ASSIGNED TO_____

Submission of a completed application is required to request special priorities assistance. See sections 217.40-44 of the Energy Priorities and Allocations System regulations (10 CFR Part 217). It is a criminal offense under 18 U.S.C. 1001 to make a willfully false statement or representation to any U.S. Government agency as to any matter within its jurisdiction. All company information furnished related to this application will be deemed business confidential under Sec. 705(d) of the Defense Production Act of 1950 [50 U.S.C. App.2155(d) which prohibits publication or disclosure of this information unless the President determines that withholding it is contrary to the interest of the national defense. The Department of Energy will assert the appropriate Freedom of Information Act (FOIA) exemptions if such information is the subject of FOIA requests. The unauthorized publication or disclosure of such information by Government personnel is prohibited by law. Violators are subject to fine and/or imprisonment.

OMB Burden Disclosure Statement

This data is being collected to implement the Department of Energy's Energy Priorities and Allocations System regulations, promulgated pursuant to the Defense Production Act of 1950, as amended (DPA). The data you supply will be used to allow you to request special priorities assistance from DOE to fill a rated order issued pursuant to the DPA and DOE's implementing regulations. DOE will also use the information to conduct audits and for enforcement purposes.

Public reporting burden for this collection of information is estimated to average 32 minutes per response, including the time for reviewing instructions, searching existing data sources, gathering and maintaining the data needed, and completing and reviewing the collection of information. Send comments regarding this burden estimate or any other aspect of this collection of information, including suggestions for reducing this burden, to Office of the Chief Information Officer, Records Management Division, IM-23, Paperwork Reduction Project (1910-5159), U.S. Department of Energy, 1000 Independence Ave SW, Washington, DC, 20585-1290; and to the Office of Management and Budget (OMB), OIRA, Paperwork Reduction Project (1910-5159), Washington, DC 20503.

1. APPLICANT INFORMATION

a. Name and complete address of Applicant (Applicant can be any person needing assistance – Government agency, contractor, or supplier. See definition of Applicant in Footnotes section on last page of this form).	b. If Applicant is not end-user Government agency, give name and complete address of Applicant's customer.
Applicant Name_____	Customer name_____
Address_____	Address_____
City_____ State_____ Zip_____	City_____ State_____ Zip_____
Contact Name_____	Contact Name_____
Title_____	Title_____
Telephone_____ Fax_____	Telephone_____ Fax_____
Email address_____	Contract/purchase order no._____
	Dated_____ Priority Rating_____

2. APPLICANT ITEM(S). If Applicant is not end-user Government agency, describe item(s) to be delivered by Applicant under its customer's contract or purchase order though the use of the item(s) listed in Block 3. If known, identify Government program and end-item for which these items are required. If Applicant is end-user Government agency and Block 3 item(s) are not end-items, identify the end-item for which the Block 3 item(s) are required. See definition of "item" in Footnotes section on last page of this form.

3. ITEM(s) (including service) FOR WHICH APPLICANT REQUESTS ASSISTANCE

Quantity *Pieces, units*	**Description** *Include identifying information such as model or part number*	**Dollar Value** *Each quantity listed*

PART 218—STANDBY MANDATORY INTERNATIONAL OIL ALLOCATION

Subpart A—General Provisions

Sec.
218.1 Purpose and scope.
218.2 Activation/Deactivation.
218.3 Definitions.

Subpart B—Supply Orders

218.10 Rule.
218.11 Supply orders.
218.12 Pricing.

Subpart C [Reserved]

Subpart D—Procedures

218.30 Purpose and scope.
218.31 Incorporated procedures.
218.32 Review.
218.33 Stay.
218.34 Addresses.

Subpart E—Investigations, Violations, Sanctions and Judicial Actions

218.40 Investigations.
218.41 Violations.
218.42 Sanctions.
218.43 Injunctions.

AUTHORITY: 15 U.S.C. 751 *et seq.;* 15 U.S.C. 787 *et seq.;* 42 U.S.C. 6201 *et seq.;* 42 U.S.C. 7101 *et seq.;* E.O. 11790, 39 FR 23185; E.O. 12009, 42 FR 46267; 28 U.S.C. 2461 note.

SOURCE: 44 FR 27972, May 14, 1979, unless otherwise noted.

Subpart A—General Provisions

§ 218.1 Purpose and scope.

(a) This part implements section 251 of the Energy Policy and Conservation Act (Pub. L. 94–163) (42 U.S.C. 6271), as amended, which authorizes the President to take such action as he determines to be necessary for performance of the obligations of the United States under chapters III and IV of the Agreement on an International Energy Program (TIAS 8278), insofar as such obligations relate to the mandatory international allocation of oil by International Energy Program participating countries.

(b) *Applicability*. This part applies to any firm engaged in producing, transporting, refining, distributing or storing oil which is subject to the jurisdiction of the United States.

§ 218.2 Activation/Deactivation.

(a) This rule shall take effect providing:

(1) The International Energy Program has been activated; and,

(2) The President has transmitted this rule to Congress, has found putting such rule into effect is required in order to fulfill obligations of the United States under the International Energy Program and has transmitted such a finding to the Congress together with a statement of the effective date and manner for exercise of such rule.

(b) This rule shall revert to standby status no later than 60 days after the deactivation of the emergency allocation system activated to implement the International Energy Program.

§ 218.3 Definitions.

DOE means the Department of Energy established by the Department of Energy Organization Act (Pub. L. 95–91), and includes the Secretary of Energy or his delegate.

EPCA means the Energy Policy and Conservation Act (Pub. L. 94–163), as amended.

Firm means any association, company, corporation, estate, individual, joint-venture, partnership, or sole proprietorship or any other entity however organized including charitable, educational, or other eleemosynary institutions, and the Federal Government including corporations, departments, Federal agencies, and other instrumentalities, and State and local governments. The ERA may, in regulations and forms issued in this part, treat as a firm: (a) A parent and the consolidated and unconsolidated entities (if any) which it directly or indirectly controls, (b) a parent and its consolidated entities, (c) an unconsolidated entity, or (d) any part of a firm.

IEA means the International Energy Agency established to implement the IEP.

IEP means the International Energy Program established pursuant to the Agreement on an International Energy Program signed at Paris, France, on November 18, 1974, including (a) the Annex entitled ''Emergency Reserves'', (b) any amendment to such Agreement that includes another nation as a Party to such Agreement, and (c) any

technical or clerical amendment to such Agreement.

International energy supply emergency means any period (a) beginning on any date that the President determines allocation of petroleum products to nations participating in the IEP is required by chapters III and IV of the IEP and (b) ending on a date on which he determines such allocation is no longer required.

Oil means crude oil, residual fuel oil, unfinished oil, refined petroleum product and natural gas liquids, which is owned or controlled by a firm, including any petroleum product destined, directly or indirectly, for import into the United States or any foreign country, or produced in the United States but excludes any oil stored in or owned and controlled by the United States Government in connection with the Strategic Petroleum Reserve authorized in section 151, *et seq.*, of the Energy Policy and Conservation Act (Pub. L. 94–163).

Person means any individual, firm, estate, trust, sole proprietorship, partnership, association, company, joint-venture, corporation, governmental unit or instrumentality thereof, or a charitable, educational or other institution, and includes any officer, director, owner or duly authorized representative thereof.

Supply order means a written directive or a verbal communication of a written directive, if promptly confirmed in writing, issued by the DOE pursuant to subpart B of this part.

United States when used in the geographic sense means the several States, the District of Columbia, Puerto Rico, and the territories and possessions of the United States, and the outer continental shelf as defined in 43 U.S.C. 1331.

Subpart B—Supply Orders

§ 218.10 Rule.

(a) Upon the determination by the President that an international energy supply emergency exists, firms engaged in producing, transporting, refining, distributing, or storing oil shall take such actions as are determined by the DOE to be necessary for implementation of the obligations of the United States under chapters III and IV of the IEP that relate to the mandatory international allocation of oil by IEP participating countries.

(b) Any actions required in accordance with paragraph (a) of this section shall be stated in supply orders issued by DOE.

(c) No firm to which a supply order is issued shall be required to comply with such order unless the firm to which the oil is to be provided in accordance with such supply order has agreed to a procedure for the resolution of any dispute related to the terms and conditions of the sale undertaken pursuant to the supply order. The means for resolving any such disputes may include any procedures that are mutually acceptable to the parties, including arbitration before the IEA if the IEA has established arbitration procedures, arbitration or adjudication before an appropriate body, or any other similar procedure.

§ 218.11 Supply orders.

(a) A supply order shall require that the firm to which it is issued take actions specified therein relating to supplying the stated volume of oil to a specified recipient including, but not limited to, distributing, producing, storing, transporting or refining oil. A supply order shall include a concise statement of the pertinent facts and of the legal basis on which it is issued, and shall describe the action to be taken.

(b) The DOE shall serve a copy of the supply order on the firm directed to act as stated therein.

(c) The DOE may modify or rescind a supply order on its own motion or pursuant to an application filed in accordance with § 218.32 of this part.

(d) A supply order shall be effective in accordance with its terms, and when served upon a firm directed to act thereunder, except that a supply order shall not remain in effect (1) upon reversion of this rule to standby status or (2) twelve months after the rule has been transmitted to Congress (whichever occurs first) or (3) to the extent that DOE or a court of competent jurisdiction directs that it be stayed, modified, or rescinded.

(e) Any firm issued a supply order pursuant to this subpart may seek modification or rescission of the supply

order in accordance with procedures provided in § 218.32 of this part.

§ 218.12 Pricing.

The price for oil subject to a supply order issued pursuant to this subpart shall be based on the price conditions prevailing for comparable commercial transactions at the time the supply order is served.

Subpart C [Reserved]

Subpart D—Procedures

§ 218.30 Purpose and scope.

This subpart establishes the administrative procedures applicable to supply orders. They shall be exclusive of any other procedures contained in this chapter, unless such other procedures are specifically made applicable hereto by this subpart.

§ 218.31 Incorporated procedures.

The following subparts of part 205 of this chapter are, as appropriate, hereby made applicable to this part:

(a) *Subpart A*— General Provisions; *Provided*, that § 205.11 shall not apply; *and Provided further*, that in addition to the methods of service specified in § 205.7 of this chapter, service shall be effective if a supply order is transmitted by telex, telecopies or other similar means of electronic transmission of a writing and received by the firm to which the supply order is addressed.

(b) *Subpart F*— Interpretation.

(c) *Subpart K*— Rulings.

(d) *Subpart M*— Conferences, Hearings and Public Hearings.

§ 218.32 Review.

(a) *Purpose and scope*. This subpart establishes the procedures for the filing of an application for review of a supply order. An application for review is a summary proceeding which will be initiated only if the critieria described in paragraph (g)(2) of this section are satisfied.

(b) *What to file*. (1) A firm filing under this subpart shall file an ''Application for Review'' which should be clearly labeled as such both on the application and on the outside of the envelope in which the application is transmitted, and shall be in writing and signed by the firm filing the application. The applicant shall comply with the general filing requirements stated in 10 CFR 205.9 in addition to the requirements stated in this section.

(2) If the applicant wishes to claim confidential treatment for any information contained in the application or other documents submitted under this subpart, the procedures set out in 10 CFR 205.9(f) shall apply.

(c) *When to file*. An application for review should be filed no later than 5 days after the receipt by the applicant of the supply order that is the subject of the application, or no later than 2 days after the occurrence of an event that results in a substantial change in the facts or circumstances affecting the applicant.

(d) *Where to file*. The application for review shall be filed with DOE Office of Hearings and Appeals (OHA), 2000 M Street, NW., Washington, DC 20461.

(e) *Notice*. The applicant shall send by United States mail or deliver by hand a copy of the application and any subsequent amendments or other documents relating to the application to the Administrator of the Economic Regulatory Administration of DOE, 2000 M Street, NW., Washington, DC 20461. Service shall be made on the ERA at same time the document is filed with OHA and each document filed with the OHA shall include certification that the applicant has complied with the requirements of this paragraph.

(f) *Contents*. (1) The application shall contain a full and complete statement of all relevant facts pertaining to the application and to the DOE action sought. Such facts shall include a complete statement of the business or other reasons that justify review of the supply order and a full description of the pertinent provisions and relevant facts contained in any relevant documents. Copies of all contracts, agreements, leases, instruments, and other documents relevant to the application shall be submitted with the application. A copy of the order of which review is sought shall be included with the application. When the application

pertains to only one step of a larger integrated transaction, the facts, circumstances, and other relevant information pertaining to the entire transaction shall be submitted.

(2) The application shall include a discussion of all relevant authorities, including, but not limited to, DOE and DOE rulings, regulations, interpretations and decisions on appeal and exception relied upon to support the action sought therein.

(g) *DOE evaluation*—(1) *Processing*. (i) The DOE may initiate an investigation of any statement in an application and utilize in its evaluation any relevant facts obtained by such investigation. The DOE may solicit and accept submissions from third parties relevant to any application for review provided that the applicant is afforded an opportunity to respond to all third party submissions. In evaluating an application for review, the DOE may convene a conference, on its own initiative, if, in its discretion, it considers that a conference will advance its evaluation of the application.

(ii) If the DOE determines that there is insufficient information upon which to base a decision and if upon request the necessary additional information is not submitted, the DOE may dismiss the application without prejudice. If the failure to supply additional information is repeated or willful, the DOE may dismiss the application with prejudice. If the applicant fails to provide the notice required by paragraph (e) of this section, the DOE may dismiss the application without prejudice.

(iii) An order dismissing an application for any of the reasons specified in paragraph (g)(1)(ii) of this section shall contain a statement of the grounds for the dismissal. The order shall become final within 5 days of its service upon the applicant, unless within such 5-day period the applicant files an amendment correcting the deficiencies identified in the order. Within 5 days of the filing of such amendment, the DOE shall notify the applicant whether the amendment corrects the specified deficiencies. If the amendment does not correct the deficiencies specified in the order, the order shall become a final order of the DOE of which the applicant may seek judicial review.

(2) An application for review of an order shall be processed only if the applicant demonstrates that—

(i) There is probable cause to believe that the supply order is erroneous, inequitable, or unduly burdensome; or

(ii) There has been discovered a law, regulation, interpretation, ruling, order or decision that was in effect at the time of the application which, if it had been made known to the DOE, would have been relevant to the supply order and would have substantially altered the supply order; or

(iii) There has been a substantial change in the facts or circumstances affecting the applicant, which change has occurred during the interval between issuance of the supply order and the date of the application and was caused by forces or circumstances beyond the control of the applicant.

(h) *Decision*. (1) Upon consideration of the application and other relevant information received or obtained during the proceeding, the DOE shall issue an order granting or denying the modification or rescission of the supply order requested in the application for review.

(2) The DOE shall process applications for review as expeditiously as possible. When administratively feasible, the DOE shall issue an order granting or denying the application within 20 business days after receipt of the application.

(3) The order shall include a written statement setting forth the relevant facts and the legal basis of the order. The order shall state that it is a final order of which the applicant may seek judicial review.

(4) The DOE shall serve a copy of the order upon the applicant and any other party who participated in the proceeding.

§ 218.33 Stay.

(a) The DOE may issue an order granting a stay if the DOE determines that an applicant has made a compelling showing that it would incur serious and irreparable injury unless immediate stay relief is granted pending determination of an application for review pursuant to this subpart. An application for a stay shall be labeled as

such on the application and on the outside of the envelope in which the application is transmitted, and shall be in writing and signed by the firm filing the application. It shall include a description of the proceeding incident to which the stay is being sought and of the facts and circumstances which support the applicant's claim that it will incur irreparable injury unless immediate stay relief is granted. The applicant shall comply with the general filing requirements stated in 10 CFR 205.9 in addition to the requirements stated in this section. The DOE on its own initiative may also issue an order granting a stay upon a finding that a firm will incur irreparable injury if such an order is not granted.

(b) An order granting a stay shall expire by its terms within such time after issuance, not to exceed 30 days as the DOE specifies in the order, except that it shall expire automatically 5 days following its issuance if the applicant fails within that period to file an application for review unless within that period the DOE for good cause shown, extends the time during which the applicant may file an application for review.

(c) The order granting or denying a stay is not an order of the DOE subject to administrative review.

§ 218.34 Addresses.

All correspondence, petitions, and any information required by this part shall be submitted to: Administrator, Economic Regulatory Administration, Department of Energy, 2000 M Street, NW., Washington, DC 20461, and to the Director, Office of Hearings and Appeals, Department of Energy, 2000 M Street, NW., Washington, DC 20461.

Subpart E—Investigations, Violations, Sanctions and Judicial Actions

§ 218.40 Investigations.

(a) The DOE may initiate and conduct investigations relating to the scope, nature and extent of compliance by any person with the rules, regulations or statutes of the DOE or any order promulgated by the DOE under the authority of section 251 of EPCA, or any court decree.

(b) Any duly designated and authorized representative of DOE has the authority to conduct an investigation and to take such action as he deems necessary and appropriate to the conduct of the investigation including any action pursuant to § 205.8.

(c) There are no parties, as that term is used in adjudicative proceedings, in an investigation under this subpart, and no person may intervene or participate as a matter of right in any investigation under this subpart.

(d) Any person may request the DOE to initiate an investigation pursuant to paragraph (a) of this section. A request for an investigation shall set forth the subject matter to be investigated as fully as possible and include supporting documentation and information. No particular forms or procedures are required.

(e) Any person who is requested to furnish documentary evidence or testimony in an investigation, upon written request, shall be informed of the general purpose of the investigation.

(f) DOE shall not disclose information or documents that are obtained during any investigation unless (1) DOE directs or authorizes the public disclosure of the investigation; (2) the information or documents are a matter of public record; or (3) disclosure is not precluded by the Freedom of Information Act, 5 U.S.C. 552 and 10 CFR part 1004.

(g) During the course of an investigation any person may submit at any time any document, statement of facts or memorandum of law for the purpose of explaining the person's position or furnish evidence which the person considers relevant to a matter under investigation.

(h) If facts disclosed by an investigation indicate that further action is unnecessary or unwarranted, the investigative file may be closed without prejudice to further investigation by the DOE at any time that circumstances so warrant.

§ 218.41 Violations.

Any practice that circumvents, contravenes or results in the circumvention or contravention of the requirements of any provision of this part 218 or any order issued pursuant thereto is

a violation of the DOE regulations stated in this part and is unlawful.

§ 218.42 Sanctions.

(a) *General.* Any person who violates any provisions of this part 218 or any order issued pursuant thereto shall be subject to penalties and sanctions as provided herein.

(1) The provisions herein for penalties and sanctions shall be deemed cumulative and not mutually exclusive.

(2) Each day that a violation of the provisions of this part 218 or any order issued pursuant thereto continues shall be deemed to constitute a separate violation within the meaning of the provisions of this part relating to fines and civil penalties.

(b) *Penalties.* (1) Any person who violates any provision of part 218 of this chapter or any order issued pursuant thereto shall be subject to a civil penalty of not more than $8,000 for each violation.

(2) Any person who willfully violates any provision of this part 218 or any order issued pursuant thereto shall be subject to a fine of not more than $10,000 for each violation.

(3) Any person who knowingly and willfully violates any provision of this part 218 or any order issued pursuant thereto with respect to the sale, offer of sale, or distribution in commerce of oil in commerce after having been subject to a sanction under paragraph (b)(1) or (2) of this section for a prior violation of the provisions of this part 218 or any order issued pursuant thereto with respect to the sale, offer of sale, or distribution in commerce of oil shall be subject to a fine of not more than $50,000 or imprisonment for not more than six months, or both, for each violation.

(4) Actions for penalties under this section are prosecuted by the Department of Justice upon referral by the DOE.

(5) When the DOE considers it to be appropriate or advisable, the DOE may compromise and settle any action under this paragraph, and collect civil penalties.

(c) *Other Penalties.* Willful concealment of material facts, or making of false, fictitious or fraudulent statements or representations, or submission of a document containing false, fictitious or fraudulent statements pertaining to matters within the scope of this part 218 by any person shall subject such persons to the criminal penalties provided in 18 U.S.C. 1001 (1970).

[44 FR 27972, May 14, 1979, as amended at 62 FR 46183, Sept. 2, 1997; 74 FR 66032, Dec. 14, 2009]

§ 218.43 Injunctions.

Whenever it appears to the DOE that any firm has engaged, is engaging, or is about to engage in any act or practice constituting a violation of any regulation or order issued under this part 218, the DOE may request the Attorney General to bring a civil action in the appropriate district court of the United States to enjoin such acts or practices and, upon a proper showing, a temporary restraining order or a preliminary or permanent injunction shall be granted without bond. The relief sought may include a mandatory injunction commanding any firm to comply with any provision of such order or regulation, the violation of which is prohibited by section 524 of the EPCA.

PART 220 [RESERVED]

PART 221—PRIORITY SUPPLY OF CRUDE OIL AND PETROLEUM PRODUCTS TO THE DEPARTMENT OF DEFENSE UNDER THE DEFENSE PRODUCTION ACT

Subpart A—General

Sec.
221.1 Scope.
221.2 Applicability.

Subpart B—Exclusions

221.11 Natural gas and ethane.

Subpart C—Definitions

221.21 Definitions.

Subpart D—Administrative Procedures and Sanctions

221.31 Requests by DOD.
221.32 Evaluation of DOD request.
221.33 Order.
221.34 Effect of order.
221.35 Contractual requirements.

221.36 Records and reports.
221.37 Violations and sanctions.

AUTHORITY: Defense Production Act, 50 U.S.C. App. 2061 *et seq.*, E.O. 10480 (18 FR 4939, Aug. 18, 1953) as amended by E.O. 12038 (43 FR 4957, Feb. 7, 1978), and E.O. 11790 (39 FR 23785, June 27, 1974).

SOURCE: 45 FR 76433, Nov. 19, 1980, unless otherwise noted.

Subpart A—General

§ 221.1 Scope.

This part sets forth the procedures to be utilized by the Economic Regulatory Administration of the Department of Energy and the Department of Defense whenever the priority supply of crude oil and petroleum products is necessary or appropriate to meet national defense needs. The procedures available in this part are intended to supplement but not to supplant other regulations of the ERA regarding the allocation of crude oil, residual fuel oil and refined petroleum products.

§ 221.2 Applicability.

This part applies to the mandatory supply of crude oil, refined petroleum products (including liquefied petroleum gases) and lubricants to the Department of Defense for its own use or for purchases made by the Department of Defense on behalf of other Federal Government agencies.

Subpart B—Exclusions

§ 221.11 Natural gas and ethane.

The supply of natural gas and ethane are excluded from this part.

Subpart C—Definitions

§ 221.21 Definitions.

For purposes of this part—

Directive means an official action taken by ERA which requires a named person to take an action in accordance with its provisions.

DOD means the Department of Defense, including Military Departments and Defense Agencies, acting through either the Secretary of Defense or the designee of the Secretary.

ERA means the Economic Regulatory Administration of the Department of Energy.

National defense means programs for military and atomic energy production or construction, military assistance to any foreign nation, stockpiling and space, or activities directly related to any of the above.

Person means any individual, corporation, partnership, association or any other organized group of persons, and includes any agency of the United States Government or any other government.

Priority-rated supply order means any delivery order for crude oil or petroleum products issued by DOD bearing a priority rating issued by ERA under this part.

Supplier means any person other than the DOD which supplies, sells, transfers, or otherwise furnishes (as by consignment) crude oil or petroleum product to any other person.

Subpart D—Administrative Procedures and Sanctions

§ 221.31 Requests by DOD.

(a) When DOD finds that (1) a fuel supply shortage for DOD exists or is anticipated which would have a substantial negative impact on the national defense, and (2) the defense activity for which fuel is required cannot be postponed until after the fuel supply shortage is likely to terminate, DOD may submit a written request to ERA for the issuance to it of a priority rating for the supply of crude oil and petroleum products.

(b) Not later than the transmittal date of its request to ERA, DOD shall notify the Federal Emergency Management Agency that it has requested a priority rating from ERA.

(c) Requests from DOD shall set forth the following:

(1) The quantity and quality of crude oil or petroleum products determined by DOD to be required to meet national defense requirements;

(2) The required delivery dates;

(3) The defense-related activity and the supply location for which the crude oil or petroleum product is to be delivered;

(4) The current or most recent suppliers of the crude oil or petroleum product and the reasons, if known, why the suppliers will not supply the requested crude oil or petroleum product;

(5) The degree to which it is feasible for DOD to use an alternate product in lieu of that requested and, if such an alternative product can be used, the efforts which have been made to obtain the alternate product;

(6) The period during which the shortage of crude oil or petroleum products is expected to exist;

(7) The proposed supply source for the additional crude oil or petroleum products required, which shall, if practicable, be the historical supplier of such crude oil or product to DOD; and

(8) Certification that DOD has made each of the findings required by paragraph (a) of this section.

§ 221.32 Evaluation of DOD request.

(a) Upon receipt of a request from DOD for a priority rating as provided in § 221.31, it shall be reviewed promptly by ERA. The ERA will assess the request in terms of:

(1) The information provided under § 221.31;

(2) Whether DOD's national defense needs for crude oil or petroleum products can reasonably be satisfied without exercising the authority specified in this part;

(3) The capability of the proposed supplier to supply the crude oil or petroleum product in the amounts required;

(4) The known capabilities of alternative suppliers;

(5) The feasibility to DOD of converting to and using a product other than that requested; and

(6) Any other relevant information.

(b) The ERA promptly shall notify the proposed supplier of DOD's request for a priority rating specified under this part. The proposed supplier shall have a period specified in the notice, not to exceed fifteen (15) days from the date it is notified of DOD's request, to show cause in writing why it cannot supply the requested quantity and quality of crude oil or petroleum products. ERA shall consider this information in determining whether to issue the priority rating.

(c) If acceptance by a supplier of a rated order would create a conflict with another rated order of the supplier, it shall include all pertinent information regarding such conflict in its response to the show cause order provided for in subsection (b), and ERA, in consultation with DOD and the Federal Emergency Management Agency shall determine the priorities for meeting all such requirements.

(d) ERA may waive some or all of the requirements of § 221.31 or this section where the Secretary of Defense or his designee certifies, and has so notified the Federal Emergency Management Agency, that a fuel shortage for DOD exists or is imminent and that compliance with such requirements would have a substantial negative impact on the national defense.

§ 221.33 Order.

(a) *Issuance*. If ERA determines that issuance of a priority rating for a crude oil or refined petroleum product is necessary to provide the crude oil or petroleum products needed to meet the national defense requirement established by DOD, it shall issue such a rating to DOD for delivery of specified qualities and quantities of the crude oil or refined petroleum products on or during specified delivery dates or periods. In accordance with the terms of the order, DOD may then place such priority rating on a supply order.

(b) *Compliance*. Each person who receives a priority-rated supply order pursuant to this part shall supply the specified crude oil or petroleum products to DOD in accordance with the terms of that order.

(c) *ERA directives*. Notwithstanding any other provisions of this part, where necessary or appropriate to promote the national defense ERA is authorized to issue a directive to a supplier of crude oil or petroleum product requiring delivery of specified qualities and quantities of such crude oil or petroleum products to DOD at or during specified delivery dates or periods.

(d) *Use of ratings by suppliers*. No supplier who receives a priority-rated supply order or directive issued under the authority of this section may use such priority order or directive in order to

obtain materials necessary to meet its supply obligations thereunder.

§ 221.34 Effect of order.

Defense against claims for damages. No person shall be liable for damages or penalties for any act or failure to act resulting directly or indirectly from compliance with any ERA authorized priority-rated supply order or ERA directive issued pursuant to this part, notwithstanding that such priority-rated supply order or directive thereafter be declared by judicial or other competent authority to be invalid.

§ 221.35 Contractual requirements.

(a) No supplier may discriminate against an order or contract on which a priority rating has been placed under this part by charging higher prices, by imposing terms and conditions for such orders or contracts different from other generally comparable orders or contracts, or by any other means.

(b) Contracts with priority ratings shall be subject to all applicable laws and regulations which govern the making of such contracts, including those specified in 10 CFR 211.26(e).

§ 221.36 Records and reports.

(a) Each person receiving an order or directive under this part shall keep for at least two years from the date of full compliance with such order or directive accurate and complete records of crude oil and petroleum product deliveries made in accordance with such order or directive.

(b) All records required to be maintained shall be made available upon request for inspection and audit by duly authorized representatives of the ERA.

(Approved by the Office of Management and Budget under control number 1903–0073)

[45 FR 76433, Nov. 19, 1980, as amended at 46 FR 63209, Dec. 31, 1981]

§ 221.37 Violations and sanctions.

(a) Any practice that circumvents or contravenes the requirements of this part or any order or directive issued under this part is a violation of the regulations provided in this part.

(b) *Criminal penalties.* Any person who willfully performs any act prohibited, or willfully fails to perform any act required by this part or any order or directive issued under this part shall be subject to a fine of not more than $10,000 for each violation or imprisoned for not more than one year for each violation, or both.

(c) Whenever in the judgment of the Administrator of ERA any person has engaged or is about to engage in any acts or practices which constitute or will constitute a violation of any provision of these regulations, the Administrator may make application to the appropriate court for an order enjoining such acts or practices, or for an order enforcing compliance with such provision.

SUBCHAPTER B—CLIMATE CHANGE

PART 300—VOLUNTARY GREENHOUSE GAS REPORTING PROGRAM: GENERAL GUIDELINES

Sec.
300.1 General.
300.2 Definitions.
300.3 Guidance for defining and naming the reporting entity.
300.4 Selecting organizational boundaries.
300.5 Submission of an entity statement.
300.6 Emissions inventories.
300.7 Net emission reductions.
300.8 Calculating emission reductions.
300.9 Reporting and recordkeeping requirements.
300.10 Certification of reports.
300.11 Independent verification.
300.12 Acceptance of reports and registration of entity emission reductions.
300.13 Incorporation by reference.

AUTHORITY: 42 U.S.C. 7101, *et seq.*, and 42 U.S.C. 13385(b).

SOURCE: 71 FR 20805, Apr. 21, 2006, unless otherwise noted.

§ 300.1 General.

(a) *Purpose.* The General Guidelines in this part and the Technical Guidelines incorporated by reference in § 300.13 govern the Voluntary Reporting of Greenhouse Gases Program authorized by section 1605(b) of the Energy Policy Act of 1992 (42 U.S.C. 13385(b)). The purpose of the guidelines is to establish the procedures and requirements for filing voluntary reports, and to encourage corporations, government agencies, non-profit organizations, households and other private and public entities to submit annual reports of their greenhouse gas emissions, emission reductions, and sequestration activities that are complete, reliable and consistent. Over time, it is anticipated that these reports will provide a reliable record of the contributions reporting entities have made toward reducing their greenhouse gas emissions.

(b) *Reporting under the program.* (1) Each reporting entity, whether or not it intends to register emissions as described in paragraph (c) of this section, must:

(i) File an entity statement that meets the appropriate requirements in § 300.5(d) through (f) of this part;

(ii) Use appropriate emission inventory and emission reduction calculation methods specified in the Technical Guidelines (incorporated by reference, see § 300.13), and calculate and report the weighted average quality rating of any emission inventories it reports;

(iii) Comply with the record keeping requirements in § 300.9 of this part; and

(iv) Comply with the certification requirements in § 300.10 of this part;

(2) Each reporting entity, whether or not it intends to register emissions as described in paragraph (c) of this section, may report offset reductions achieved by other entities outside their boundaries as long as such reductions are reported separately and calculated in accordance with methods specified in the Technical Guidelines. The third-party entity that achieved these reductions must agree to their being reported as offset reductions, and must also meet all of the requirements of reporting that would apply if the third-party entity reported directly under the 1605(b) program.

(3) An entity that intends to register emissions and emission reductions must meet the additional requirements referenced in paragraph (c) of this section.

(4) An entity that does not intend to register emissions and emission reductions may choose to report its emissions and/or emission reductions on an entity-wide basis or for selected elements of the entity, selected gases or selected sources.

(5) An entity that does not intend to register emissions may report emission inventories for any year back to 1990 and may report emission reductions for any year back to 1991, relative to a base period of one to four years, ending no earlier than 1990.

(c) *Registration requirements.* Entities that seek to register reductions must meet the additional requirements in this paragraph; although these requirements differ depending on whether the entity is a large or small emitter.

(1) To be eligible for registration, a reduction must have been achieved after 2002, unless the entity has committed under the Climate Leaders or

Climate VISION programs to reduce its entity-wide emissions relative to a base period that ends earlier 2002, but no earlier than 2000.

(2) A large emitter must submit an entity-wide emission inventory that meets or exceeds the minimum quality requirements specified in § 300.6(b) and the Technical Guidelines (incorporated by reference, see § 300.13). Registered reductions of a large emitter must be based on an entity-wide assessment of net emission reductions, determined in accordance with § 300.8 and the Technical Guidelines.

(3) A small emitter must also submit an emission inventory that meets minimum quality requirements specified in § 300.6(b) and the Technical Guidelines (incorporated by reference, see § 300.13) and base its registered reductions on an assessment of annual changes in net emissions. A small emitter, however, may restrict its inventory and assessment to a single type of activity, such as forest management, building operations or agricultural tillage.

(4) Reporting entities may, under certain conditions, register reductions achieved by other entities:

(i) Reporting entities that have met the requirements for registering their own reductions may also register offset reductions achieved by other entities if:

(A) They have an agreement with the third-party entities to do so and these third-party entities have met all of the requirements for registration; or

(B) They were the result of qualified demand management or other programs and are calculated in accordance with the action-specific method identified in § 300.8(h)(5).

(ii) Small emitters that serve as an aggregator may register offset reductions achieved by non-reporting entities without reporting on their own emissions, as long as they have an agreement with the third-party entities to do so and these third-party entities have met all of the requirements for registration.

(d) *Forms*. Annual reports of greenhouse gas emissions, emission reductions, and sequestration must be made on forms or software made available by the Energy Information Administration of the Department of Energy (EIA).

(e) *Status of reports under previous guidelines*. EIA continues to maintain in its Voluntary Reporting of Greenhouse Gases database all reports received pursuant to DOE's October 1994 guidelines. Those guidelines are available from EIA at *http://www.eia.doe.gov/oiaf/1605/guidelns.html*.

(f) *Periodic review and updating of General and Technical Guidelines*. DOE intends periodically to review the General Guidelines and the Technical Guidelines (incorporated by reference, see § 300.13) to determine whether any changes are warranted; DOE anticipates these reviews will occur approximately once every three years. These reviews will consider any new developments in climate science or policy, the participation rates of large and small emitters in the 1605(b) program, the general quality of the data submitted by different participants, and any changes to other emissions reporting protocols. Possible changes may include, but are not limited to:

(1) The addition of greenhouse gases that have been demonstrated to have significant, quantifiable climate forcing effects when released to the atmosphere in significant quantities;

(2) Changes to the minimum, quantity-weighted quality rating for emission inventories;

(3) Updates to emission inventory methods, emission factors and other provisions that are contained in industry protocols or standards. The review may also consider updates to any government-developed and consensus-based emission factors for which automatic updating is not provided in the Technical Guidelines;

(4) Modifications to the benchmarks or emission conversion factors used to calculate avoided and indirect emissions; and

(5) Changes in the minimum requirements for registered emission reductions.

§ 300.2 Definitions.

This section provides definitions for commonly used terms in this part.

Activity of a small emitter means, with respect to a small emitter, any single category of anthropogenic production,

consumption or other action that releases emissions or results in sequestration, the annual changes of which can be assessed generally by using a single calculation method.

Aggregator means an entity that reports to the 1605(b) program on behalf of non-reporting entities. An aggregator may be a large or small emitter, such as a trade association, non-profit organization or public agency.

Anthropogenic means greenhouse gas emissions and removals that are a direct result of human activities or are the result of natural processes that have been affected by human activities.

Avoided emissions means the greenhouse gas emission reductions that occur outside the organizational boundary of the reporting entity as a direct consequence of changes in the entity's activity, including but not necessarily limited to the emission reductions associated with increases in the generation and sale of electricity, steam, hot water or chilled water produced from energy sources that emit fewer greenhouse gases per unit than other competing sources of these forms of distributed energy.

Base period means a period of 1–4 years used to derive the average annual base emissions, emissions intensity or other values from which emission reductions are calculated.

Base value means the value from which emission reductions are calculated for an entity or subentity. The value may be annual emissions, emissions intensity, kilowatt-hours generated, or other value specified in the 1605(b) guidelines. It is usually derived from actual emissions and/or activity data derived from the base period.

Biogenic emissions mean emissions that are naturally occurring and are not significantly affected by human actions or activity.

Boundary means the actual or virtual line that encompasses all the emissions and carbon stocks that are to be quantified and reported in an entity's greenhouse gas inventory, including *de minimis* emissions. Entities may use financial control or another classification method based on ownership or control as the means of determining which sources or carbon stocks fall within this organizational boundary.

Carbon dioxide equivalent means the amount of carbon dioxide by weight emitted into the atmosphere that would produce the same estimated radiative forcing as a given weight of another radiatively active gas. Carbon dioxide equivalents are computed by multiplying the weight of the gas being measured by its estimated global warming potential.

Carbon stocks mean the quantity of carbon stored in biological and physical systems including: trees, products of harvested trees, agricultural crops, plants, wood and paper products and other terrestrial biosphere sinks, soils, oceans, and sedimentary and geological sinks.

Climate Leaders means the EPA sponsored industry-government partnership that works with individual companies to develop long-term comprehensive climate change strategies. Certain Climate Leaders Partners have, working with EPA, set a corporate-wide greenhouse gas reduction goal and have inventoried their emissions to measure progress towards their goal.

Climate VISION means the public-private partnership initiated pursuant to a Presidential directive issued in 2002 that aims to contribute to the President's goal of reducing greenhouse gas intensity through voluntary frameworks with industry. Climate VISION partners have signed an agreement with DOE to implement various climate-related actions to reduce greenhouse gas emissions.

De minimis emissions means emissions from one or more sources and of one or more greenhouse gases that, in aggregate, are less than or equal to 3 percent of the total annual carbon dioxide (CO_2) equivalent emissions of a reporting entity.

Department or *DOE* means the U.S. Department of Energy.

Direct emissions are emissions from sources within the organizational boundaries of an entity.

Distributed energy means electrical or thermal energy generated by an entity that is sold or otherwise exported outside of the entity's boundaries for use by another entity.

EIA means the Energy Information Administration within the U.S. Department of Energy.

Emissions means the direct release of greenhouse gases to the atmosphere from any anthropogenic (human induced) source and certain indirect emissions (releases) specified in this part.

Emissions intensity means emissions per unit of output, where output is defined as the quantity of physical output, or a non-physical indicator of an entity's or subentity's productive activity.

Entity means the whole or part of any business, institution, organization, government agency or corporation, or household that:

(1) Is recognized under any U.S. Federal, State or local law that applies to it;

(2) Is located and operates, at least in part, in the United States; and

(3) The emissions of such operations are released, at least in part, in the United States.

First reduction year means the first year for which an entity intends to register emission reductions; it is the year that immediately follows the start year.

Fugitive emissions means uncontrolled releases to the atmosphere of greenhouse gases from the processing, transmission, and/or transportation of fossil fuels or other materials, such as HFC leaks from refrigeration, SF6 from electrical power distributors, and methane from solid waste landfills, among others, that are not emitted via an exhaust pipe(s) or stack(s).

Greenhouse gases means the gases that may be reported to the Department of Energy under this program. They are:

(1) Carbon dioxide (CO_2)

(2) Methane (CH_4)

(3) Nitrous oxide (N_2O)

(4) HydrofluorocarbonsHFC-23 [trifluoromethane-(CHF_3]HFC-32 [trifluoromethane-CH_2F_2], CH_2CF_3, CH_3F, CHF_2CF_3, CH_2FCF_3, CH_3FCF_3, CHF_2CH_2F, CF_3CH_3, CH_2FCH_2F, CH_3CHF_2, CH_3CH_2F, CF_3CHFCF_3, $CH_2FCF_3CF_3$, CHF_2CHFCF_3, $CF_3CH_2CF_3$, $CH_2FCF_2CHF_2$, $CHF_2CH_2CF_3$, $CF_3CH_2CF_2CH_3$, CH_3 $CHFCHFCF_2$)

(5) Perfluorocarbons (perfluoromethane-CF_4, perfluoroethane-C_2F_6, C_3F_8, C_4F_{10}, c-C_4F_8, C_5F_{12}, C_6F_{14})

(6) Sulfur hexafluoride (SF_6)

(7) Chlorofluorocarbons (CFC-11 [trichlorofluoromethane-CCl_3F], CCl_2F_2, $CClF_3$, CCl_2FCClF_2, $CClF_2CClF_2$, ClF_3CClF_2,)

(8) Other gases or particles that have been demonstrated to have significant, quantifiable climate forcing effects when released to the atmosphere in significant quantities and for which DOE has established or approved methods for estimating emissions and reductions. (NOTE: As provided in § 300.6(i), chlorofluorcarbons and other gases with quantifiable climate forcing effects may be reported to the 1605(b) program if DOE has established an appropriate emission inventory or emission reduction calculation method, but reductions of these gases may not be registered.)

Incidental lands are entity landholdings that are a minor component of an entity's operations and are not actively managed for production of goods and services, including:

(1) Transmission, pipeline, or transportation right of ways that are not managed for timber production;

(2) Land surrounding commercial enterprises or facilities; and

(3) Land where carbon stock changes are determined by natural factors.

Indirect emissions means greenhouse gas emissions from stationary or mobile sources outside the organizational boundary that occur as a direct consequence of an entity's activity, including but not necessarily limited to the emissions associated with the generation of electricity, steam and hot/chilled water used by the entity.

Large emitter means an entity whose annual emissions are more than 10,000 metric tons of CO_2 equivalent, as determined in accordance with § 300.5(c).

Net emission reductions means the sum of all annual changes in emissions, eligible avoided emissions and sequestration of the greenhouse gases specifically identified in § 300.6(i), and determined to be in conformance with §§ 300.7 and 300.8 of this part.

Offset means an emission reduction that is included in a 1605(b) report and

meets the requirements of this part, but is achieved by an entity other than the reporting entity. Offset reductions must not be reported or registered by any other entity and must appear as a separate and distinct component of an entity's report. Offsets are not integrated into the reporting entity's emissions or net emission reductions.

Registration means the reporting of emission reductions that the EIA has determined meet the qualifications for registered emission reductions set forth in the guidelines.

Reporting entity means an entity that has submitted a report under the 1605(b) program that has been accepted by the Energy Information Administration.

Reporting year means the year that is the subject of a report to DOE.

Sequestration means the process by which CO_2 is removed from the atmosphere, either through biologic processes or physical processes.

Simplified Emission Inventory Tool (SEIT) is a computer-based method, to be developed and made readily accessible by EIA, for translating common physical indicators into an estimate of greenhouse gas emissions.

Sink means an identifiable discrete location, set of locations, or area in which CO_2 or some other greenhouse gas is sequestered.

Small emitter means an entity whose annual emissions are less than or equal to 10,000 metric tons of CO_2 equivalent, as determined in accordance with § 300.5(c), and that chooses to be treated as a small emitter under the guidelines.

Source means any land, facility, process, vehicle or activity that releases a greenhouse gas.

Start year means the year upon which the initial entity statement is based and the last year of the initial base period(s).

Subentity means a component of any entity, such as a discrete business line, facility, plant, vehicle fleet, or energy using system, which has associated with it emissions of greenhouse gases that can be distinguished from the emissions of all other components of the same entity and, when summed with the emissions of all other subentities, equal the entity's total emissions.

Total emissions means the total annual contribution of the greenhouse gases (as defined in this section) to the atmosphere by an entity, including both direct and indirect entity-wide emissions.

United States or *U.S.* means the 50 States, the District of Columbia, the Commonwealth of Puerto Rico, the Commonwealth of the Northern Mariana Islands, Guam, American Samoa, and any other territory of the United States.

§ 300.3 Guidance for defining and naming the reporting entity.

(a) A reporting entity must be composed of one or more businesses, public or private institutions or organizations, households, or other entities having operations that annually release emissions, at least in part, in the United States. Entities may be defined by, as appropriate, a certificate of incorporation, corporate charter, corporate filings, tax identification number, or other legal basis of identification recognized under any Federal, State or local law or regulation. If a reporting entity is composed of more than one entity, all of the entities included must be responsible to the same management hierarchy and all entities that have the same management hierarchy must be included in the reporting entity.

(b) All reporting entities are strongly encouraged to define themselves at the highest level of aggregation. To achieve this objective, DOE suggests the use of a corporate-level definition of the entity, based on filings with the Securities and Exchange Commission or institutional charters. While reporting at the highest level of aggregation is encouraged, DOE recognizes that certain businesses and institutions may conclude that reporting at some lower level is desirable. Federal agencies are encouraged to report at the agency or departmental level, but distinct organizational units (such as a Department of the Interior Fish and Wildlife Service National Wildlife Refuge) may report directly if authorized by their department or agency. Once an entity has determined the level of corporate or institutional management at which it will report (*e.g.*, the holding

company, subsidiary, regulated stationary source, state government, agency, refuge, etc.), the entity must include all elements of the organization encompassed by that management level and exclude any organizations that are managed separately. For example, if two subsidiaries of a parent company are to be covered by a single report, then all subsidiaries of that parent company must also be included. Similarly, if a company decides to report on the U.S. and Canadian subsidiaries of its North American operations unit, it must also report on any other subsidiaries of its North American unit, such as a Mexican subsidiary.

(c) A name for the defined entity must be specified by all reporters. For entities that intend to register reductions, this should be the name commonly used to represent the activities being reported, as long as it is not also used to refer to substantial activities not covered by the entity's reports. While DOE believes entities should be given considerable flexibility in defining themselves at an appropriate level of aggregation, it is essential that the name assigned to an entity that intends to register reductions corresponds closely to the scope of the operations and emissions covered by its report. If, for example, an individual plant or operating unit is reporting as an entity, it should be given a name that corresponds to the specific plant or unit, and not to the responsible subsidiary or corporate entity. In order to distinguish a parent company from its subsidiaries, the name of the parent company generally should not be incorporated into the name of the reporting subsidiary, but if it is, the name of the parent company usually should be secondary.

§ 300.4 Selecting organizational boundaries.

(a) Each reporting entity must disclose in its entity statement the approach used to establish its organizational boundaries, which should be consistent with the following guidelines:

(1) In general, entities should use financial control as the primary basis for determining their organizational boundaries, with financial control meaning the ability to direct the financial and operating policies of all elements of the entity with a view to gaining economic or other benefits from its activities over a period of many years. This approach should ensure that all sources, including those controlled by subsidiaries, that are wholly or largely owned by the entity are covered by its reports. Sources that are under long-term lease of the entity may, depending on the provisions of such leases, also be considered to be under the entity's financial control. Sources that are temporarily leased or operated by an entity generally would not be considered to be under its financial control.

(2) Entities may establish organizational boundaries using approaches other than financial control, such as equity share or operational control, but must disclose how the use of these other approaches results in organizational boundaries that differ from those resulting from using the financial control approach.

(3) Emissions from facilities or vehicles that are partially-owned or leased may be included at the entity's discretion, provided that the entity has taken reasonable steps to assure that doing so does not result in the double counting of emissions, sequestration or emission reductions. Emissions reductions or sequestration associated with land, facilities or other sources not owned or leased by an entity may not be included in the entity's reports under the program unless the entity has long-term control over the emissions or sequestration of the source and the owner of the source has agreed that the emissions or sequestration may be included in the entity's report.

(4) If the scope of a defined entity extends beyond the United States, the reporting entity should use the same approach to determining its organizational boundaries in the U.S. and outside the U.S.

(b) Each reporting entity must keep separate reports on emissions or emission reductions that occur within its defined boundaries and those that occur outside its defined boundaries. Entities must also keep separate reports on emissions and emission reductions that occur outside the United

States and those that occur within the United States.

(c) An entity that intends to register its entity-wide emissions reductions must document and maintain its organizational boundary for accounting and reporting purposes.

§ 300.5 Submission of an entity statement.

(a) *Determining the type of reporting entity*. The entity statement requirements vary by type of reporting entity. For the purposes of these guidelines, there are three types of entities:

(1) Large emitters that intend to register emission reductions;

(2) Small emitters that intend to register emission reductions; and

(3) Emitters that intend to report, but not register emission reductions.

(b) *Choosing a start year*. The first entity statement describes the make-up, operations and boundaries of the entity, as they existed in the start year.

(1) For all entities, it is the year immediately preceding the first year for which the entity intends to register emission reductions and the last year of the initial base period(s).

(2) For entities intending to register emission reductions, the start year may be no earlier than 2002, unless the entity has made a commitment to reduce its entity-wide emissions under the Climate Leaders or Climate VISION program. An entity that has made such a commitment may establish a start year derived from the base period of the commitment, as long as it is no earlier than 2000.

(i) For a large emitter, the start year is the first year for which the entity submits a complete emissions inventory under the 1605(b) program.

(ii) The entity's emissions in its start year or its average annual emissions over a period of up to four years ending in the start year determine whether it qualifies to begin reporting as a small emitter.

(3) For entities not intending to register reductions, the start year may be no earlier than 1990.

(c) *Determining and maintaining large or small emitter reporting status*. (1) Any entity that intends to register emission reductions can choose to participate as a large emitter, but only an entity that has demonstrated that its annual emissions are less than or equal to 10,000 metric tons of CO_2 equivalent may participate as a small emitter. To demonstrate that its annual emissions are less than or equal to 10,000 metric tons of CO_2 equivalent, an entity must submit either an estimate of its emissions during its chosen start year or an estimate of its average annual emissions over a continuous period not to exceed four years of time ending in its chosen start year, as long as the operations and boundaries of the entity have not changed significantly during that period.

(2) An entity must estimate its total emissions using methods specified in Chapter 1 of the Technical Guidelines (incorporated by reference, see § 300.13) or by using the Simplified Emission Inventory Tool (SEIT) provided by EIA and also discussed in Chapter 1. The results of this estimate must be reported to EIA. [NOTE: emission estimates developed using SEIT may not be used to prepare, in whole or part, entity-wide emission inventories required for the registration of reductions.]

(3) After starting to report, each small emitter must annually certify that the emissions-related operations and boundaries of the entity have not changed significantly since the previous report. A new estimate of total emissions must be submitted after any significant increase in emissions, any change in the operations or boundaries of the small emitter, or every five years, whichever occurs first. Small emitters with estimated annual emissions of over 9,000 metric tons of CO_2 equivalent should re-estimate and submit their emissions annually. If an entity determines that it must report as a large emitter, then it must continue to report as a large emitter in all future years in order to ensure a consistent time series of reports. Once a small emitter becomes a large emitter, it must begin reporting in conformity with the reporting requirements for large emitters.

(d) *Entity statements for large emitters intending to register reductions*. When a large emitter intending to register emission reductions first reports under these guidelines, it must provide the

following information in its entity statement:

(1) The name to be used to identify the participating entity;

(2) The legal basis of the named entity;

(3) The criteria used to determine:

(i) The organizational boundaries of the entity, if other than financial control; and

(ii) The sources of emissions included or excluded from the entity's reports, such as sources excluded as *de minimis* emissions;

(4) The names of any parent or holding companies the activities of which will not be covered comprehensively by the entity's reports;

(5) The names of any large subsidiaries or organizational units covered comprehensively by the entity's reports. All subsidiaries of the entity must be covered by the entity's reports, but only large subsidiaries must be specifically identified in the entity statement;

(6) A list of each country where operations occur, if the entity is including any non-U.S. operations in its report;

(7) A description of the entity and its primary U.S. economic activities, such as electricity generation, product manufacturing, service provider or freight transport; for each country listed under paragraph (d)(6) of this section, the large emitter should describe the economic activity in that country.

(8) A description of the types of emission sources or sinks to be covered in the entity's emission inventories, such as fossil fuel power plants, manufacturing facilities, commercial office buildings or heavy-duty vehicles;

(9) The names of other entities that substantially share the ownership or operational control of sources that represent a significant part of the reporting entity's emission inventories, and a certification that, to the best of the certifier's knowledge, the direct greenhouse gas emissions and sequestration in the entity's report are not included in reports filed by any of these other entities to the 1605(b) program; and

(10) Identification of the start year.

(e) *Entity statements for small emitters intending to register reductions.* When a small emitter intending to register emission reductions first reports under these guidelines, it must provide the following information in its entity statement:

(1) The name to be used to identify the participating entity;

(2) The legal basis of the named entity;

(3) An identification of the entity's control over the activities covered by the entity's reports, if other than financial control;

(4) The names of any parent or holding companies the activities of which will not be covered comprehensively by the entity's reports;

(5) An identification or description of the primary economic activities of the entity, such as agricultural production, forest management or household operation; if any of the economic activities covered by the entity's reports occur outside the U.S., a listing of each country in which such activities occur;

(6) An identification or description of the specific activity (or activities) and the emissions, avoided emissions or sequestration covered by the entity's report, such as landfill gas recovery or forest sequestration;

(7) A certification that, to the best of the certifier's knowledge, the direct greenhouse gas emissions and sequestration in the entity's report are not included in reports filed by any other entities reporting to the 1605(b) program; and

(8) Identification of the start year.

(f) *Entity statements for reporting entities not registering reductions.* When a participant not intending to register emission reductions first reports under this part, it must, at a minimum, provide the following information in its entity statement:

(1) The name to be used to identify the reporting entity;

(2) The legal basis of the entity;

(3) An identification of the entity's control over the activities covered by the entity's reports, if other than financial control;

(4) A description of the entity and its primary economic activities, such as electricity generation, product manufacturing, service provider, freight transport, agricultural production, forest management or household operation; if any of the economic activities covered by the entity's reports occur

outside the United States, a listing of each country in which such activities occur; and

(5) A description of the types of emission sources or sinks, such as fossil fuel power plants, manufacturing facilities, commercial office buildings or heavy-duty vehicles, covered in the entity's reports of emissions or emission reductions.

(g) *Changing entity statements.* (1) Reporting entities are required to annually review and, if necessary, update their entity statements.

(2) From time to time, a reporting entity may choose to change the scope of activities included within the entity's reports or the level at which the entity wishes to report. A reporting entity may also choose to change its organizational boundaries, its base period, or other elements of its entity statement. For example, companies buy and sell business units, or equity share arrangements may change. In general, DOE encourages changes in the scope of reporting that expand the coverage of an entity's report and discourages changes that reduce the coverage of such reports unless they are caused by divestitures or plant closures. Any such changes should be reported in amendments to the entity statement, and major changes may warrant or require changes in the base values used to calculate emission reductions and, in some cases, the entity's base periods. Changes in the scope of reporting made on or before May 31 of a given calendar year must be reflected in the report submitted covering emissions and reductions for the following calendar year. Reporting entities may choose to postpone incorporating changes in the scope of reporting made after May 31 until submitting the report covering emissions and reductions for the year after the following calendar year. However, in no case should there be an interruption in the annual reports of entities registering emission reductions. Chapter 2 of the Technical Guidelines (incorporated by reference, see § 300.13) provides more specific guidance on how such changes should be reflected in entity statements, reports, and emission reduction calculations.

(h) *Documenting changes in amended entity statements.* A reporting entity's entity statement in subsequent reports should focus primarily on changes since the previous report. Specifically, the subsequent entity statement should report the following information:

(1) For significant changes in the reporting entity's scope or organizational boundaries, the entity should document:

(i) The acquisition or divestiture of discrete business units, subsidiaries, facilities, and plants;

(ii) The closure or opening of significant facilities;

(iii) The transfer of economic activity to or from specific subentities covered by the entity's reports, such as the transfer of operations to non-U.S. subsidiaries;

(iv) Significant changes in land holdings (applies to entities reporting on greenhouse gas emissions or sequestration related to land use, land use change, or forestry);

(v) Whether the reporting entity is reporting at a higher level of aggregation than it did in the previous report, and if so, a listing of the subsidiary entities that are now aggregated under a revised conglomerated entity, including a listing of any non-U.S. operations to be added and the specific countries in which these operations are located; and

(vi) Changes in its activities or operations (*e.g.*, changes in output, contractual arrangements, equipment and processes, outsourcing or insourcing of significant activities) that are likely to have a significant effect on emissions, together with an explanation of how it believes the changes in economic activity influenced its reported emissions or sequestrations.

§ 300.6 Emissions inventories.

(a) *General.* The objective of an emission inventory is to provide a full accounting of an entity's emissions for a particular year, including direct emissions of the first six categories of gases listed in the definition of ''greenhouse gases'' in § 300.2, indirect emissions specified in paragraph (e) of this section, and all sequestration or other changes in carbon stocks. An emission

inventory must be prepared in accordance with Chapter 1 of the Technical Guidelines (incorporated by reference, see § 300.13). An inventory does not include avoided emissions or any offset reductions, and is not subsequently adjusted to reflect future acquisitions, divestitures or other changes to the reporting entity (although a reporting entity often makes these types of adjustments when calculating emission reductions under the guidelines). Entity-wide inventories are a prerequisite for the registration of emission reductions by entities with average annual emissions of more than 10,000 metric tons of CO_2 equivalent. Entities that have average annual emissions of less than or equal to 10,000 metric tons of CO_2 equivalent are eligible to register emission reductions associated with specific activities without also reporting an inventory of the total emissions, but such entities should inventory and report the emissions associated with the specific activity(ies) they do cover in their reports.

(b) *Quality requirements for emission inventories.* The Technical Guidelines (incorporated by reference, see § 300.13) usually identify more than one acceptable method of measuring or estimating greenhouse gas emissions. Each acceptable method is rated A, B, C or D, with A methods usually corresponding to the highest quality method available and D methods representing the lowest quality method that may be used. Each letter is assigned a numerical rating reflecting its relative quality, 4 for A methods, 3 for B methods, 2 for C methods and 1 for D methods. Entities that intend to register emission reductions must use emission inventory methods that result in a quantity-weighted average quality rating of at least 3.0.

(1) Entities may at any time choose to modify the measurement or estimation methods that they use for their current or future year emission inventories. Such modifications would enable entities to gradually improve the quality of the ratings over time, but prior year inventories may be modified only to correct significant errors.

(2) Entities that have had their emission quantities and the quantity-weighted quality rating of their emissions inventory independently verified may report their emissions and average quality ratings by greenhouse gas, indirect emissions and sequestration, rather than by source or sink category.

(3) Entities that certify that they have used only A or B methods, may forego indicating in their reports the quality ratings of the methods used and may forego calculating the quantity-weighted average quality of their emission inventories.

(c) *Using estimation methods not included in the Technical Guidelines.* An entity may obtain DOE approval for the use of an estimation method not included in the Technical Guidelines (incorporated by reference, see § 300.13) if the method covers sources not described in the Technical Guidelines, or if the method provides more accurate results for the entity's specific circumstances than the methods described in the Technical Guidelines. If an entity wishes to propose the use of a method that is not described in the Technical Guidelines, the entity must provide a written description of the method, an explanation of how the method is implemented (including data requirements), empirical evidence of the method's validity and accuracy, and a suggested rating for the method to DOE's Office of Policy and International Affairs (with a copy to EIA). DOE reserves the right to deny the request, or to assign its own rating to the method. By submitting this information, the entity grants permission to DOE to incorporate the method in a future revision of the Technical Guidelines.

(d) *Direct emissions inventories.* Direct greenhouse gas emissions that must be reported are the emissions resulting from stationary or mobile sources within the organizational boundaries of an entity, including but not limited to emissions resulting from combustion of fossil fuels, process emissions, and fugitive emissions. Process emissions (*e.g.*, PFC emissions from aluminum production) must be reported along with fugitive emissions (*e.g.*, leakage of greenhouse gases from equipment).

(e) *Inventories of indirect emissions associated with purchased energy.* (1) To provide a clear incentive for the users

of electricity and other forms of purchased energy to reduce demand, an entity must include the indirect emissions from the consumption of purchased electricity, steam, and hot or chilled water in the entity's inventory as indirect emissions. To avoid double counting among entities, the entity must report all indirect emissions separately from its direct emissions. Entities should use the methods for quantifying indirect emissions specified in the Technical Guidelines (incorporated by reference, see § 300.13).

(2) Entities may choose to report other forms of indirect emissions, such as emissions associated with employee commuting, materials consumed or products produced, although such other indirect emissions may not be included in the entity's emission inventory and may not be the basis for registered emission reductions. All such reports of other forms of indirect emissions must be distinct from reports of indirect emissions associated with purchased energy and must be based on emission measurement or estimation methods identified in the Technical Guidelines (incorporated by reference, see § 300.13) or approved by DOE.

(f) *Entity-level inventories of changes in terrestrial carbon stocks.* Annual changes in managed terrestrial carbon stocks should be comprehensively assessed and reported across the entity, and the net emissions resulting from such changes included in the entity's emissions inventory. Entities should use the methods for estimating changes in managed terrestrial carbon stocks specified in the Technical Guidelines (incorporated by reference, see § 300.13).

(g) *Treatment of de minimis emissions and sequestration.* (1) Although the goal of the entity-wide reporting requirement is to provide an accurate and comprehensive estimate of total emissions, there may be small emissions from certain sources that are unduly costly or otherwise difficult to measure or reliably estimate annually. An entity may exclude particular sources of emissions or sequestration if the total quantities excluded represent less than or equal to 3 percent of the total annual CO_2 equivalent emissions of the entity. The entity must identify the types of emissions excluded and provide an estimate of the annual quantity of such emissions using methods specified in the Technical Guidelines (incorporated by reference, see § 300.13) or by using the Simplified Emissions Inventory Tool (SEIT). The results of this estimate of the entity's total excluded annual emissions must be reported to DOE together with the entity's initial entity statement.

(2) After starting to report, each reporting entity that excludes from its annual reports any *de minimis* emissions must re-estimate the quantity of excluded emissions after any significant increase in such emissions, or every five years, whichever occurs sooner.

(h) *Separate reporting of domestic and international emissions.* Non-U.S. emissions included in an entity's emission inventory must be separately reported and clearly distinguished from emissions originating in the U.S. Entities must identify any country-specific factors used in the preparation of such reports.

(i) *Covered gases.* Entity-wide emissions inventories must include the emissions of the first six categories of named gases listed in the definition of ''greenhouse gases'' in § 300.2. Entities may report chlorofluorocarbons and other greenhouse gases with quantifiable climate forcing effects as long as DOE has established a method for doing so, but such gases must be reported separately and emission reductions, if any, associated with such other gases are not eligible for registration.

(j) *Units for reporting.* Emissions and sequestration should be reported in terms of the mass (not volume) of each gas, using metric units (*e.g.*, metric tons of methane). Entity-wide and sub-entity summations of emissions and reductions from multiple sources must be converted into CO_2 equivalent units using the global warming potentials for each gas in the International Panel on Climate Change's Third Assessment (or most recent) Report, as specified in the Technical Guidelines (incorporated by reference, see § 300.13). Entities should specify the units used (*e.g.*, kilograms, or metric tons). Entities may need to use the standard conversion factors specified in the Technical Guidelines to

convert existing data into the common units required in the entity-level report. Emissions from the consumption of purchased electricity must be calculated by region (from the list provided by DOE in the Technical Guidelines) or country, if outside the United States. Consumption of purchased steam or chilled/hot water must be reported according to the type of system and fuel used to generate it (from the list provided by DOE in the Technical Guidelines). Entities must convert purchased energy to CO_2 equivalents using the conversion factors in the Technical Guidelines. Entities should also provide the physical quantities of each type of purchased energy covered by their reports.

§ 300.7 Net emission reductions.

(a) Entities that intend to register emission reductions achieved must comply with the requirements of this section. Entities may voluntarily follow these procedures if they want to demonstrate the achievement of net, entity-wide reductions for years prior to the earliest year permitted for registration. Only large emitters must follow the requirements of paragraph (b) of this section, but small emitters may do so voluntarily. Only entities that qualify as small emitters may use the special procedures in paragraph (c) of this section. Entities seeking to register emission reductions achieved by other entities (offsets) must certify that these emission reductions were calculated in a manner consistent with the requirements of paragraph (d) of this section and use the emission reduction calculation methods identified in § 300.8. All entities seeking to register emission reductions must comply with the requirements of paragraph (e) of this section. Only reductions in the emissions of the first six categories of gases listed in the definition of ''greenhouse gases'' in § 300.2 are eligible for registration.

(b) *Assessing net emission reductions for large emitters.* (1) Entity-wide reporting is a prerequisite for registering emission reductions by entities with average annual emissions of more than 10,000 metric tons of CO_2 equivalent. Net annual entity-wide emission reductions must be based, to the maximum extent practicable, on a full assessment and sum total of all changes in an entity's emissions, eligible avoided emissions and sequestration relative to the entity's established base period(s). This assessment must include all entity emissions, including the emissions associated with any non-U.S. operations covered by the entity statement, although the reductions achieved by non-U.S. operations must be separately totaled prior to being integrated with the net emission reductions achieved by U.S. operations. It must include the annual changes in the total emissions of the entity, including the total emissions of each of the subentities identified in its entity statement. All changes in emissions, avoided emissions, and sequestration must be determined using methods that are consistent with the guidelines described in § 300.8 of this part.

(2) If it is not practicable to assess the changes in net emissions resulting from certain entity activities using at least one of the methods described in § 300.8 of this part, the entity may exclude them from its estimate of net emission reductions. The entity must identify as one or more distinct subentities the sources of emissions excluded for this reason and describe the reasons why it was not practicable to assess the changes that had occurred. DOE believes that few emission sources will be excluded for this reason, but has identified at least two situations where such an exclusion would be warranted. For example, it is likely to be impossible to assess the emission changes associated with a new manufacturing plant that produces a product for which the entity has no historical record of emissions or emissions intensity (emissions per unit of product output). However, once the new plant has been operational for at least a full year, a base period and base value(s) for the new plant could be established and its emission changes assessed in the following year. Until the emission changes of this new subentity can be assessed, it should be identified in the entity's report as a subentity for which no assessment of emission changes is practicable. The other example involves a subentity that has reduced its

output below the levels of its base period. In such a case, the subentity could not use the absolute emissions method and may also be unable to identify an effective intensity metric or other method.

(3) In calculating its net annual emission reductions, an entity should exclude any emissions or sequestration that have been excluded from the entity's inventory. The entity should also exclude all *de minimis* and biogenic emissions that are excluded from the entity's inventory of greenhouse gas emissions from its assessments of emission changes.

(c) *Assessing emission reductions for entities with small emissions.* (1) Entities with average annual emissions of less than or equal to 10,000 metric tons of CO_2 equivalent are not required to inventory their total emissions or assess all changes in their emissions, eligible avoided emissions and sequestration to qualify for registered reductions. These entities may register emission reductions that have occurred since 2002 and that are associated with one or more specific activities, as long as they:

(i) Perform a complete assessment of the annual emissions and sequestration associated with each of the activities upon which they report, using methods that meet the same quality requirements applicable to entity-wide emission inventories; and

(ii) Determine the changes in the emissions, eligible avoided emissions or sequestration associated with each of these activities.

(2) An entity reporting as a small emitter must report on one or more specific activities and is encouraged, but not required to report on all activities occurring within the entity boundary. Examples of small emitter activities include: vehicle operations; product manufacturing processes; building operations or a distinct part thereof, such as lighting; livestock operations; crop management; and power generation. For example, a farmer managing several woodlots and also producing a wheat crop may report emission reductions associated with managing an individual woodlot. However, the farmer must also assess and report the net sequestration resulting from managing all the woodlots within the entity's boundary. The small emitter is not required to report on emissions or reductions associated with growing the wheat crop.

(3) A small emitter must certify that the reductions reported were not caused by actions likely to cause increases in emissions elsewhere within the entity's operations. This certification should be based on an assessment of the likely direct and indirect effects of the actions taken to reduce greenhouse gas emissions.

(d) *Net emission reductions achieved by other entities (offset reductions or emission reductions submitted by aggregators).* A reporting entity or aggregator under certain conditions may report or register all or some of the net emission reductions achieved by entities that choose not to report under the section 1605(b) program. In all cases, an agreement must exist between the reporting entity or aggregator and the other entity that specifies the quantity of the emission reductions (or increases) achieved by the other entity that may be reported or registered as an offset reduction by the reporting entity or aggregator. A large emitter that is reporting on behalf of other entities must meet all of the requirements applicable to large emitters, including submission of an entity statement, an emissions inventory, and an entity-wide assessment of emission reductions. If an aggregator is a small emitter, it may choose to report only on the activities, emissions and emission reductions of the entities on behalf of which it is reporting and not to report on any of its own activities or emission reductions. The reporting entity or aggregator must include in its report all of the information on the other entity, including an entity statement, an emissions inventory (when required), and an assessment of emission reductions that would be required if the other entity were directly reporting to EIA. The net emissions reductions (or increases) of each other entity will be evaluated separately by EIA to determine whether they are eligible for registration in accordance with the guidelines of this part. Those registered reductions (or increases) assigned by the

other entity, by agreement, to a reporting entity or aggregator will be included in EIA's summary of all registered offset reductions for that entity or aggregator. If the agreement between the reporting entity and other entity is discontinued, for any reason, the reporting entity must inform EIA and must identify any emission reductions previously reported that could be attributable to an increase in the carbon stocks of the other entity. Such reductions will be removed by EIA from the records of the reporting entity's offset reductions.

(e) *Net emission reductions to be reported by other entities as offset reductions.* Entities must identify in their report the quantity of any net emission reductions covered by the report, if any, that another entity will report as an offset reduction, including the name of the other entity;

(f) *Adjusting for year-to-year increases in net emissions.* (1) Normally, net annual emission reductions for an entity are calculated by summing the net annual changes in emissions, eligible avoided emissions and sequestration, as determined using the calculation methods identified in § 300.8 and according to the procedures described in paragraph (b) of this section for large emitters, paragraph (c) for small emitters of this section for small emitters, and paragraph (d) of this section for offsets. However, if the entity experienced a net increase in emissions for one or more years, these increases must be reported and taken into account in calculating any future year reductions. If the entity subsequently achieves net annual emission reductions, the net increases experienced in the preceding year(s) must be more than offset by these reductions before the entity can once again register emission reductions. For example, if an entity achieved a net emission reduction of 5,000 metric tons of CO_2 equivalent in its first year, a net increase of 2,000 metric tons in its second year, and a net reduction of 3,000 metric tons in its third year, it would be able to register a 5,000 metric ton reduction in its first year, no reduction in its second year, and a 1,000 metric ton reduction in its third year (3,000–2,000). The entity must file full reports for each of these three years. Its report for the second year would indicate the net increase in emissions and this increase would be noted in EIA's summary of the entity's report for that year and for any future year, until the emissions increase was entirely offset by subsequent emission reductions. If this same entity achieved a net reduction of only 1,000 metric tons in its third year, it would not be able to register additional reductions until it had, in some future year, offset more than its second year increase of 2,000 metric tons.

(2) [Reserved]

§ 300.8 Calculating emission reductions.

(a) *Choosing appropriate emission reduction calculation methods.* (1) An entity must choose the method or methods it will use to calculate emission reductions from the list provided in paragraph (h) of this section. Each of the calculation methods has special characteristics that make it applicable to only certain types of emissions and activities. An entity should select the appropriate calculation method based on several factors, including:

(i) How the entity's subentities are defined;

(ii) How the reporter will gather and report emissions data; and

(iii) The availability of other types of data that might be needed, such as production or output data.

(2) For some entities, a single calculation method will be sufficient, but many entities may need to apply more than one method because discrete components of the entity require different calculation methods. In such a case, the entity will need to select a method for each subentity (or discrete component of the entity with identifiable emission or reductions). The emissions and output measure (generally a physical measure) of each subentity must be clearly distinguished and reported separately. Guidance on the selection and specification of calculation methods is provided in Chapter 2 of the Technical Guidelines (incorporated by reference, see § 300.13).

(b) *Identifying subentities for calculating reductions.* If more than one calculation method is to be used, an entity must specify the portion of the entity (the subentity) to which each method will be applied. Each subentity must be clearly identified. From time to time, it may be necessary to modify existing or create new subentities. The entity must provide to EIA a full description of such changes, together with an explanation of why they were required.

(c) *Choosing a base period for calculating reductions.* In general, the base period used in calculating emission reductions is the single year or up to four-year period average immediately preceding the first year of calculated emission reductions.

(d) *Establishing base values.* To calculate emission reductions, an entity must establish a base value against which to compare reporting year performance. The minimum requirements for base values for each type of calculation method are specified in Chapter 2 of the Technical Guidelines (incorporated by reference, see § 300.13). In most cases, an historic base value, derived from emissions or other data gathered during the base period, is the minimum requirement specified. Entities may, however, choose to establish base values that are more stringent than the base values derived from the methods specified in Chapter 2 of the Technical Guidelines as long as their report indicates the rationale for the alternative base value and demonstrates that it would result in a smaller quantity of emission reductions.

(e) *Emission reduction and subentity statements.* For each subentity, an entity must submit to EIA the following information:

(1) An identification and description of the method used to calculate emission reductions, including:

(i) The type of calculation method;

(ii) The measure of output used (if any); and

(iii) The method-specific base period for which any required base value will be calculated.

(2) The base period used in calculating reductions. When an entity starts to report, the base period used in calculating reductions must end in the start year. However, over time the reporting entity may find it necessary to revise or establish new base periods and base values in response to significant changes in processes or output of the subentity.

(3) A description of the subentity and its primary economic activity or activities, such as electricity generation, product manufacturing, service provider, freight transport, or household operation; and

(4) A description of the emission sources or sinks covered, such as fossil fuel power plants, manufacturing facilities, commercial office buildings or heavy-duty vehicles.

(f) *Changes in calculation methods, base periods and base values.* When significant changes occur in the composition or output of reporting entities, a reporting entity may need to change previously specified calculation methods, base periods or base values. A reporting entity should make such changes only if necessary and it should fully document the reasons for any changes. The Technical Guidelines (incorporated by reference, see § 300.13) describe when such changes should be made and what information on such changes must be provided to DOE. In general, such changes should not result in any alterations to previously reported or registered emission reductions. A reporting entity may alter previously reported or registered emission reductions only if necessary to correct significant errors.

(g) *Continuous reporting.* To ensure that the summation of entity annual reports accurately represents net, multi-year emission reductions, an entity must submit a report every year, beginning with the first reduction year. An entity may use a specific base period to determine emission reductions in a given future year only if the entity has submitted qualified reports for each intervening year. If an interruption occurs in the annual reports of an entity, the entity must subsequently report on all missing years prior to qualifying for the registration of additional emission reductions.

(h) *Calculation methods.* An entity must calculate any change in emissions, avoided emissions or sequestration using one or more of the methods described in this paragraph and in the Technical Guidelines (incorporated by reference, see § 300.13).

(1) *Changes in emissions intensity.* An entity may use emissions intensity as a basis for determining emission reductions as long as the entity selects a measure of output that is:

(i) A reasonable indicator of the output produced by the entity;

(ii) A reliable indicator of changes in the entity's activities;

(iii) Related to emissions levels; and

(iv) Any appropriate adjustments for acquisitions, divestitures, insourcing, outsourcing, or changes in products have been made, as described in the Technical Guidelines (incorporated by reference, see § 300.13).

(2) *Changes in absolute emissions.* An entity may use changes in the absolute (actual) emissions (direct and/or indirect) as a basis for determining net emission reductions as long as the entity makes only those adjustments required by the Technical Guidelines (incorporated by reference, see § 300.13). An entity intending to register emission reductions may use this method only if the entity demonstrates in its report that any reductions derived from such changes were not achieved as a result of reductions in the output of the entity, and certifies that emission reductions are not the result of major shifts in the types of products or services produced. Entities may report, but not register, such reductions even if the output associated with such emissions is declining.

(3) *Changes in carbon storage (for actions within entity boundaries).* An entity may use changes in carbon storage as a basis for determining net emission reductions as long as the entity uses estimation and measurement methods that comply with the Technical Guidelines (incorporated by reference, see § 300.13), and has included an assessment of the net changes in all sinks in its inventory.

(4) *Changes in avoided emissions (for actions within entity boundaries).* An entity may use changes in avoided emissions to determine its emission reductions. Avoided emissions eligible to be included in the calculation of net emission reductions that qualify for registration include those associated with the sale of electricity, steam, hot water or chilled water generated from non-emitting or low-emitting sources as a basis for determining net emission reductions as long as:

(i) The measurement and calculation methods used comply with the Technical Guidelines (incorporated by reference, see § 300.13);

(ii) The entity certifies that any increased sales were not attributable to the acquisition of a generating facility that had been previously operated, unless the entity's base period includes generation values from the acquired facility's operation prior to its acquisition; and

(iii) Generators of distributed energy that have net emissions in their base period and intend to report reductions resulting from changes in eligible avoided emissions, use a method specified in the Technical Guidelines (incorporated by reference, see § 300.13) that integrates the calculation of reductions resulting from both changes in emissions intensity and changes in avoided emissions.

(5) *Action-specific emission reductions (for actions within entity boundaries).* A number of source- or situation-specific methods are provided in the Technical Guidelines and these methods must be used to assess the annual changes in emissions for the specific sources or situation addressed by these methods. In addition, a generic action-specific method is identified in the Technical Guidelines. An entity intending to register reductions may use the generic action-specific approach only if it is not possible to measure accurately emission changes by using one of the methods identified in paragraphs (h)(1) through (h)(4) of this section. Entities that intend to register reductions and that use the generic action-specific approach must explain why it is not possible to use any of these other methods. An entity not intending to register reductions may use the generic action-specific method to determine emission reductions, as long as the entity demonstrates that the estimate is based on analysis that:

(i) Uses output, utilization and other factors that are consistent, to the maximum extent practicable, with the action's actual performance in the year for which reductions are being reported;

(ii) Excludes any emission reductions that might have resulted from reduced output or were caused by actions likely to be associated with increases in emissions elsewhere within the entity's operations; and

(iii) Uses methods that are in compliance with the Technical Guidelines (incorporated by reference, see § 300.13).

(i) *Summary description of actions taken to reduce emissions.* Each reported emission reduction must be accompanied by an identification of the types of actions that were the likely cause of the reductions achieved. Entities are also encouraged to include in their reports information on the benefits and costs of the actions taken to reduce greenhouse gas emissions, such as the expected rates of return, life cycle costs or benefit to cost ratios, using appropriate discount rates.

(j) *Emission reductions associated with plant closings, voluntary actions and government (including non-U.S. regulatory regimes) requirements.* (1) Each report of emission reductions must indicate whether the reported emission reductions were the result, in whole or in part, of plant closings, voluntary actions, or government requirements. EIA will presume that reductions that were not the result of plant closings or government requirements are the result of voluntary actions.

(2) If emission reductions were, in whole or in part, the direct result of plant closings that caused a decline in output, the report must identify the reductions as such; these reductions do not qualify for registration. EIA will presume that reductions calculated using the emissions intensity method do not result from a decline in output.

(3) If the reductions were associated, in whole or part, with U.S. or non-U.S. government requirements, the report should identify the government requirement involved and the effect these requirements had on the reported emission reductions. If, as a result of the reduction, a non-U.S. government issued to the reporting entity a credit or other financial benefit or regulatory relief, the report should identify the government requirement involved and describe the specific form of benefit or relief provided.

(k) *Determining the entity responsible for emission reductions.* The entity that EIA will presume to be responsible for emission reduction, avoided emission or sequestered carbon is the entity with financial control of the facility, land or vehicle which generated the reported emissions, generated the energy that was sold so as to avoid other emissions, or was the place where the sequestration action occurred. If control is shared, reporting of the associated emission reductions should be determined by agreement between the entities involved so as to avoid double-counting; this agreement must be reflected in the entity statement and in any report of emission reductions. EIA will presume that an entity is not responsible for any emission reductions associated with a facility, property or vehicle excluded from its entity statement.

§ 300.9 Reporting and recordkeeping requirements.

(a) *Starting to report under the guidelines.* An entity may report emissions and sequestration on an annual basis beginning in any year, but no earlier than the base period of 1987–1990 specified in the Energy Policy Act of 1992. To be recognized under these guidelines, all reports must conform to the measurement methods established by the Technical Guidelines (incorporated by reference, see § 300.13).

(b) *Revisions to reports submitted under the guidelines.* (1) Once EIA has accepted a report under this part, it may be revised by the reporting entity only under the circumstances specified in this paragraph and related provisions of the Technical Guidelines (incorporated by reference, see § 300.13). In general:

(i) Revised reports may be submitted to correct errors that have a significant effect on previously estimated emissions or emission reductions; and

(ii) Emission inventories may be revised in order to create a consistent time series based on improvements in

the emission estimation or measurement techniques used.

(2) Reporting entities must provide the corrected or improved data to EIA, together with an explanation of the significance of the change and its justification.

(3) If a change in calculation methods (for inventories or reductions) is made for a particular year, the reporting entity must, if feasible, revise its base value to assure methodological consistency with the reporting year value.

(c) *Definition and deadline for annual reports.* Entities must report emissions on a calendar year basis, from January 1 to December 31. To be included in the earliest possible EIA annual report of greenhouse gas emissions reported under this part, entity reports that have not been independently verified must be submitted to DOE no later than July 1 for emissions occurring during the previous calendar year. Reports that have been independently verified must be submitted by September 1 for emissions occurring during the previous year.

(d) *Recordkeeping.* Entities intending to register reductions must maintain adequate supporting records of base period data for the duration of their participation in the 1605(b) program. Supporting records for all reporting year data must be maintained for at least three years subsequent to the relevant reporting year to enable verification of all information reported. The records should document the basis for the entity's report to EIA, including:

(1) The content of entity statements, including the identification of the specific facilities, buildings, land holding and other operations or emission sources covered by the entity's reports and the legal, equity, operational and other bases for their inclusion;

(2) Information on the identification and assessment of changes in entity boundaries, processes or products that might have to be reported to EIA;

(3) Any agreements or relevant communications with other entities or third parties regarding the reporting of emissions or emission reductions associated with sources the ownership or operational control of which is shared;

(4) Information on the methods used to measure or estimate emissions, and the data collection and management systems used to gather and prepare this data for inclusion in reports;

(5) Information on the methods used to calculate emission reductions, including the basis for:

(i) The selection of the specific output measures used, and the data collection and management systems used to gather and prepare output data for use in the calculation of emission reductions;

(ii) The selection and modification of all base years, base periods and baselines used in the calculation of emission reductions;

(iii) Any baseline adjustments made to reflect acquisitions, divestitures or other changes;

(iv) Any models or other estimation methods used; and

(v) Any internal or independent verification procedures undertaken.

(e) *Confidentiality.* DOE will protect trade secret and commercial or financial information that is privileged or confidential as provided in 5 U.S.C. 552(b)(4). An entity must clearly indicate in its 1605(b) report the information for which it requests confidentiality. DOE will handle requests for confidentiality of information submitted in 1605(b) reports in accordance with the process established in DOE's Freedom of Information regulations at 10 CFR § 1004.11.

§ 300.10 Certification of reports.

(a) *General requirement and certifying official*: All reports submitted to EIA must include a certification statement, as provided in paragraph (b) of this section, signed by a certifying official of the reporting entity. A household report may be certified by one of its members. All other reports must be certified by the chief executive officer, agency head, or an officer or employee of the entity who is responsible for reporting the entity's compliance with environmental regulations.

(b) *Certification statement requirements.* All entities, whether reporting or registering reductions, must certify the following:

(1) The information reported is accurate and complete;

(2) The information reported has been compiled in accordance with this part; and

(3) The information reported is consistent with information submitted in prior years, if any, or any inconsistencies with prior year's information are documented and explained in the entity statement.

(c) *Additional requirements for registering*. The certification statement of an entity registering reductions must also certify that:

(1) The entity took reasonable steps to ensure that direct emissions, emission reductions, and/or sequestration reported are neither double counted nor reported by any other entity. Reasonable steps include telephone, fax, letter, or e-mail communications to ensure that another entity does not intend to report the same emissions, emission reductions, and/or sequestration to DOE. Direct communications of this kind with participants in demand-side management or other programs directed at very small emitters are not required;

(2) Any emission reductions reported or registered by the entity that were achieved by another entity (other than a very small emitter that participated in a demand-side management or other program) are included in the entity's report only if:

(i) The other entity does not intend to report or register theses reductions directly;

(ii) There exists a written agreement with each other entity providing that the reporting entity is the entity entitled to report or register these emission reductions; and

(iii) The information reported on the other entity would meet the requirements of this part if the entity were reporting directly to DOE;

(3) None of the emissions, emission reductions, or sequestration reported were produced by shifting emissions to other entities or to non-reporting parts of the entity;

(4) None of any reported changes in avoided emissions associated with the sale of electricity, steam, hot or chilled water generated from non-emitting or low-emitting sources are attributable to the acquisition of a generating facility that has been previously operated, unless the entity's base period includes generation values from the acquiring facility's operation prior to its acquisition;

(5) The entity maintains records documenting the analysis and calculations underpinning the data reported on this form and records documenting the analysis and calculations underpinning the base values used in calculating annual reductions are maintained in accordance with § 300.9(d) of this part; and

(6) The entity has, or has not, obtained independent verification of the report, as described in § 300.11.

§ 300.11 Independent verification.

(a) *General*. Entities are encouraged to have their annual reports reviewed by independent and qualified auditors, as described in paragraphs (b), (c), and (f) of this section.

(b) *Qualifications of verifiers*. (1) DOE envisions that independent verification will be performed by professional verifiers (*i.e.*, individuals or companies that provide verification or ''attestation'' services). EIA will consider a report to the program to be independently verified if:

(i) The lead individual verifier and other members of the verification team are accredited by one or more independent and nationally-recognized accreditation programs, described in paragraph (c) of this section, for the types of professionals needed to determine compliance with DOE's 1605(b) guidelines;

(ii) The lead verifier has experience managing an auditing or verification process, including the recruitment and allocation of other individual verifiers, and has been empowered to make decisions relevant to the provision of a verification statement; and

(iii) All members of a verification team have education, training and/or professional experience that matches the tasks performed by the individual verifiers, as deemed necessary by the verifier accreditation program.

(2) As further guidance, all members of the verification team should be familiar with:

(i) The subject matter covered by the scope of the verification;

(ii) The requirements of this part;

(iii) Greenhouse gas emission and emission reduction quantification;

(iv) Data and information auditing sampling methods; and

(v) Risk assessment and methodologies and materiality analysis procedures outlined by other domestic and international standards.

(3) An individual verifier should have a professional degree or accreditation in engineering (environmental, industrial, chemical), accounting, economics, or a related field, supplemented by specific training and/or experience in emissions reporting and accounting, and should have his or her qualifications and continuing education periodically reviewed by an accreditation program. The skills required for verification are often cross-disciplinary. For example, an individual verifier reviewing a coal electric utility should be knowledgeable about mass balance calculations, fuel purchasing accounting, flows and stocks of coals, coal-fired boiler operation, and issues of entity definition.

(4) Companies that provide verification services must use professionals that possess the necessary skills and proficiency levels for the types of entities for which they provide verification services. Continuing training may be required to ensure all individuals have up-to-date knowledge regarding the tasks they perform.

(c) *Qualifications of organizations accrediting verifiers*. Organizations that accredit individual verifiers must be nationally recognized certification programs. They may include, but are not limited to the: American Institute of Certified Public Accountants; American National Standards Institute's Registrar Accreditation Board program for Environmental Management System auditors (ANSI–RAB–EMS); Board of Environmental, Health and Safety Auditor Certification: California Climate Action Registry; Clean Development Mechanism Executive Board; and the United Kingdom Accreditation Scheme.

(d) *Scope of verification*. (1) As part of any independent verification, qualified verifiers must use their expertise and professional judgment to verify for accuracy, completeness and consistency with DOE's guidelines of:

(i) The content of entity statements, annual reports and the supporting records maintained by the entity;

(ii) The representation in entity statements (or lack thereof) of any significant changes in entity boundaries, products, or processes;

(iii) The procedures and methods used to collect emissions and output data, and calculate emission reductions (for entities with widely dispersed operations, this process should include on-site reviews of a sample of the facilities);

(iv) Relevant personnel training and management systems; and

(v) Relevant quality assurance/quality control procedures.

(2) DOE expects qualified verifiers to refer to the growing body of literature on methods of evaluating the elements listed in paragraph (d)(1) of this section, such as the California Climate Action Registry Certification Protocol, the Climate Leaders Inventory Management Plan Checklist, and the draft ISO 14064.3 Protocol for Validation, Verification and Certification.

(e) *Verification statement*. Both the verifier and, if relevant, an officer of the company providing the verification service must sign the verification statement. The verification statement shall attest to the following:

(1) The verifier has examined all components listed in paragraph (d) of this section;

(2) The information reported in the verified entity report and this verification statement is accurate and complete;

(3) The information reported by the entity has been compiled in accordance with this part;

(4) The information reported on the entity report is consistent with information submitted in prior years, if any, or any inconsistencies with prior year's information are documented and explained in the entity statement;

(5) The verifier used due diligence to assure that direct emissions, emission reductions, and/or sequestration reported are not reported by any other entity;

(6) Any emissions, emission reductions, or sequestration that were

achieved by a third-party entity are included in this report only if there exists a written agreement with each third party indicating that they have agreed that the reporting entity should be recognized as the entity entitled to report these emissions, emission reductions, or sequestration;

(7) None of the emissions, emission reductions, or sequestration reported was produced by shifting emissions to other entities or to non-reporting parts of the entity;

(8) No reported changes in avoided emissions associated with the sale of electricity, steam, hot or chilled water generated from non-emitting or low-emitting sources are attributable to the acquisition of a generating facility that has been previously operated, unless the base year generation values are derived from records of the facility's operation prior to its acquisition;

(9) The verifying entity has procedures in place for the maintenance of records that are sufficient to document the analysis and calculations underpinning this verification. The verifying entity shall maintain such records related to base period data submitted by the reporting entity for the duration of the reporting entity's participation in the 1605(b) program and records related to all other verified data for a period of no less than three years; and

(10) The independent verifier is not owned in whole or part by the reporting entity, nor provides any ongoing operational or support services to the entity, except services consistent with independent financial accounting or independent certification of compliance with government or private standards.

(f) *Qualifying as an independent verifier*. An independent verifier may not be owned in whole or part by the reporting entity, nor may it provide any ongoing operational or support services to the entity, except services consistent with independent financial accounting or independent certification of compliance with government or private standards.

§ 300.12 Acceptance of reports and registration of entity emission reductions.

(a) *Acceptance of reports*. EIA will review all reports to ensure they are consistent with this part and with the Technical Guidelines (incorporated by reference, see § 300.13). EIA will also review all reports for completeness, internal consistency, arithmetic accuracy and plausibility. Subject to the availability of adequate resources, EIA intends to notify entities of the acceptance or rejection of any report within six months of its receipt.

(b) *Registration of emission reductions*. EIA will review each accepted report to determine if emission reductions were calculated using an acceptable base period (usually ending no earlier than 2002), and to confirm that the report complies with the other provisions of this part. EIA will also review its records to verify that the reporting entity has submitted accepted annual reports for each year between the establishment of its base period and the year covered by the current report. EIA will notify the entity that reductions meeting these requirements have been credited to the entity as ''registered reductions'' which can be held by the reporting entity for use (including transfer to other entities) in the event a future program that recognizes such reductions is enacted into law.

(c) *Rejection of reports*. If EIA does not accept a report or if it determines that emission reductions intended for registration do not qualify, EIA will return the report to the sender with an explanation of its inadequacies. The reporting entity may resubmit a modified report for further consideration at any time.

(d) *EIA database and summary reports*. The Administrator of EIA will establish a publicly accessible database composed of all reports that meet the definitional, measurement, calculation, and certification requirements of these guidelines. EIA will maintain separate subtotals of direct emissions, indirect emissions and carbon fluxes. A portion of the database will provide summary information on the emissions and registered emission reductions of each reporting entity.

§ 300.13 Incorporation by reference.

The Technical Guidelines for the Voluntary Reporting of Greenhouse Gases (1605(b)) Program (January 2007), referred to throughout this part as the ''Technical Guidelines,'' have been approved for incorporation by reference by the Director of the Federal Register in accordance with 5 U.S.C. 552(a) and 1 CFR part 51. You may obtain a copy of the Technical Guidelines from the Office of Policy and International Affairs, U.S. Department of Energy, 1000 Independence Ave., SW., Washington, DC 20585, or by visiting the following Web site: *http://www.policy.energy.gov/enhancingGHGregistry/technicalguidelines/*. The Technical Guidelines also are available for inspection at the National Archives and Record Administration (NARA). For more information on the availability of this material at NARA, call 202–741–6030, or go to: *http://www.archives.gov/federal_register/code_of_federal_regulations/ibr_locations.html*.

[71 FR 20805, Apr. 21, 2006, as amended at 72 FR 4413, Jan. 31, 2007]

SUBCHAPTER C [RESERVED]

SUBCHAPTER D—ENERGY CONSERVATION

PARTS 400–417 [RESERVED]

PART 420—STATE ENERGY PROGRAM

Subpart A—General Provisions for State Energy Program Financial Assistance

Sec.
420.1 Purpose and scope.
420.2 Definitions.
420.3 Administration of financial assistance.
420.4 Technical assistance.
420.5 Reports.
420.6 Reference standards.

Subpart B—Formula Grant Procedures

420.10 Purpose.
420.11 Allocation of funds among the States.
420.12 State matching contribution.
420.13 Annual State applications and amendments to State plans.
420.14 Review and approval of annual State applications and amendments to State plans.
420.15 Minimum criteria for required program activities for plans.
420.16 Extensions for compliance with required program activities.
420.17 Optional elements of State Energy Program plans.
420.18 Expenditure prohibitions and limitations.
420.19 Administrative review.

Subpart C—Implementation of Special Projects Financial Assistance

420.30 Purpose and scope.
420.31 Notice of availability.
420.32 Program guidance/solicitation.
420.33 Application requirements.
420.34 Matching contributions or cost-sharing.
420.35 Application evaluation.
420.36 Evaluation criteria.
420.37 Selection.
420.38 Special projects expenditure prohibitions and limitations.

AUTHORITY: Title III, part D, as amended, of the Energy Policy and Conservation Act (42 U.S.C. 6321 *et seq.*); Department of Energy Organization Act (42 U.S.C. 7101 *et seq.*)

SOURCE: 61 FR 35895, July 8, 1996, unless otherwise noted.

EDITORIAL NOTE: Nomenclature changes to part 420 appear at 64 FR 46114, Aug. 24, 1999.

Subpart A—General Provisions for State Energy Program Financial Assistance

§ 420.1 Purpose and scope.

It is the purpose of this part to promote the conservation of energy, to reduce the rate of growth of energy demand, and to reduce dependence on imported oil through the development and implementation of a comprehensive State Energy Program and the provision of Federal financial and technical assistance to States in support of such program.

§ 420.2 Definitions.

As used in this part:

Act means title III, part D, as amended, of the Energy Policy and Conservation Act, 42 U.S.C. 6321 *et seq.*

Alternative transportation fuel means methanol, denatured ethanol, and other alcohols; mixtures containing 85 percent or more by volume of methanol, denatured ethanol, and other alcohols with gasoline or other fuels; natural gas; liquified petroleum gas; hydrogen; coal-derived liquid fuels; fuels (other than alcohol) derived from biological materials (including neat biodiesel); and electricity (including electricity from solar energy).

ASHRAE/IESNA 90.1–1989, as amended means the building design standard published in December 1989 by the American Society of Heating, Refrigerating and Air-Conditioning Engineers, and the Illuminating Engineering Society of North America titled ''Energy Efficient Design of New Buildings Except Low-Rise Residential Buildings,'' with Addenda 90.1b–1992; Addenda 90.1d–1992; Addenda 90.1e–1992; Addenda 90.1g–1993; and Addenda 90.1i–1993, which is incorporated by reference in accordance with 5 U.S.C. 552(a) and 1 CFR part 51. The availability of this incorporation by reference is given in § 420.6(b).

Assistant Secretary means the Assistant Secretary for Energy Efficiency and Renewable Energy or any official to whom the Assistant Secretary's

functions may be redelegated by the Secretary.

British thermal unit (Btu) means the quantity of heat necessary to raise the temperature of one pound of water one degree Fahrenheit at 39.2 degrees Fahrenheit and at one atmosphere of pressure.

Building means any structure which includes provision for a heating or cooling system, or both, or for a hot water system.

Carpool means the sharing of a ride by two or more people in an automobile.

Carpool matching and promotion campaign means a campaign to coordinate riders with drivers to form carpools and/or vanpools.

Commercial building means any building other than a residential building, including any building constructed for industrial or public purposes.

Commercially available means available for purchase by the general public or target audience in the State.

Deputy Assistant Secretary means the Deputy Assistant Secretary for Building Technology, State and Community Programs or any official to whom the Deputy Assistant Secretary's functions may be redelegated by the Assistant Secretary.

Director, Office of State and Community Programs means the official responsible for DOE's formula grant programs to States, or any official to whom the Director's functions may be redelegated by the Assistant Secretary.

DOE means the Department of Energy.

Energy audit means any process which identifies and specifies the energy and cost savings which are likely to be realized through the purchase and installation of particular energy efficiency measures or renewable energy measures.

Energy efficiency measure means any capital investment that reduces energy costs in an amount sufficient to recover the total cost of purchasing and installing such measure over an appropriate period of time and maintains or reduces non-renewable energy consumption.

Environmental residual means any pollutant or pollution causing factor which results from any activity.

Exterior envelope physical characteristics means the physical nature of those elements of a building which enclose conditioned spaces through which thermal energy may be transferred to or from the exterior.

Governor means the chief executive officer of a State, the District of Columbia, Puerto Rico, or any territory or possession of the United States, or a person duly designated in writing by the Governor to act upon his or her behalf.

Grantee means the State or other entity named in the notice of grant award as the recipient.

HVAC means heating, ventilating and air-conditioning.

IBR means incorporation by reference.

Industrial facility means any fixed equipment or facility which is used in connection with, or as part of, any process or system for industrial production or output.

Institution of higher education has the same meaning as such term is defined in section 1201(a) of the Higher Education Act of 1965 (20 U.S.C. 1141(a)).

Manufactured home means any dwelling covered by the Federal Manufactured Home Construction and Safety Standards, 24 CFR part 3280.

Metropolitan Planning Organization means that organization required by the Department of Transportation, and designated by the Governor as being responsible for coordination within the State, to carry out transportation planning provisions in a Standard Metropolitan Statistical Area.

Model Energy Code, 1993, including Errata, means the model building code published by the Council of American Building Officials, which is incorporated by reference in accordance with 5 U.S.C. 552(a) and 1 CFR part 51. The availability of this incorporation by reference is given in § 420.6(b).

Park-and-ride lot means a parking facility generally located at or near the trip origin of carpools, vanpools and/or mass transit.

Petroleum violation escrow funds. For purposes both of exempting petroleum violation escrow funds from the matching requirements of § 420.12 and of applying the limitations specified under § 420.18(b), this term means any funds

distributed to the States by the Department of Energy or any court and identified as Alleged Crude Oil Violation funds, together with any interest earned thereon by the States, but excludes any funds designated as ''excess funds'' under section 3003(d) of the Petroleum Overcharge Distribution and Restitution Act, subtitle A of title III of the Omnibus Budget Reconciliation Act of 1986, Public Law 99–509, and the funds distributed under the ''Warner Amendment,'' section 155 of Public Law 97–377.

Plan means a State Energy Program plan including required program activities in accordance with §420.15 and otherwise meeting the applicable provisions of this part.

Political subdivision means a unit of government within a State, including a county, municipality, city, town, township, parish, village, local public authority, school district, special district, council of governments, or any other regional or intrastate governmental entity or instrumentality of a local government exclusive of institutions of higher learning and hospitals.

Preferential traffic control means any one of a variety of traffic control techniques used to give carpools, vanpools and public transportation vehicles priority treatment over single occupant vehicles other than bicycles and other two-wheeled motorized vehicles.

Program activity means one or more State actions, in a particular area, designed to promote energy efficiency, renewable energy and alternative transportation fuel.

Public building means any building which is open to the public during normal business hours, including:

(1) Any building which provides facilities or shelter for public assembly, or which is used for educational office or institutional purposes;

(2) Any inn, hotel, motel, sports arena, supermarket, transportation terminal, retail store, restaurant, or other commercial establishment which provides services or retail merchandise;

(3) Any general office space and any portion of an industrial facility used primarily as office space;

(4) Any building owned by a State or political subdivision thereof, including libraries, museums, schools, hospitals, auditoriums, sport arenas, and university buildings; and

(5) Any public or private non-profit school or hospital.

Public transportation means any scheduled or nonscheduled transportation service for public use.

Regional Office Director means the director of a DOE Regional Office with responsibility for grants administration or any official to whom that function may be redelegated.

Renewable energy means a non-depletable source of energy.

Renewable energy measure means any capital investment that reduces energy costs in an amount sufficient to recover the total cost of purchasing and installing such measure over an appropriate period of time and that results in the use of renewable energy to replace the use of non-renewable energy.

Residential building means any building which is constructed for residential occupancy.

Secretary mean the Secretary of DOE.

SEP means the State Energy Program under this part.

Small business means a private firm that does not exceed the numerical size standard promulgated by the Small Business Administration under section 3(a) of the Small Business Act (15 U.S.C. 632) for the Standard Industrial Classification (SIC) codes designated by the Secretary of Energy.

Start-up business means a small business which has been in existence for 5 years or less.

State means a State, the District of Columbia, Puerto Rico, or any territory or possession of the United States.

State or local government building means any building owned and primarily occupied by offices or agencies of a State; and any building of a unit of local government or a public care institution which could be covered by part H, title III, of the Energy Policy and Conservation Act, 42 U.S.C. 6372–6372i.

Transit level of service means characteristics of transit service provided which indicate its quantity, geographic area of coverage, frequency and quality (comfort, travel, time, fare and image).

Urban area traffic restriction means a setting aside of certain portions of an urban area as restricted zones where

varying degrees of limitation are placed on general traffic usage and/or parking.

Vanpool means a group of riders using a vehicle, with a seating capacity of not less than eight individuals and not more than fifteen individuals, for transportation to and from their residence or other designated locations and their place of employment, provided the vehicle is driven by one of the pool members.

Variable working schedule means a flexible working schedule to facilitate activities such as carpools, vanpools, public transportation usage, and/or telecommuting.

[61 FR 35895, July 8, 1996, as amended at 62 FR 26726, May 14, 1997]

§ 420.3 Administration of financial assistance.

(a) Financial assistance under this part shall comply with applicable laws and regulations including, but without limitation, the requirements of:

(1) Executive Order 12372, Intergovernmental Review of Federal Programs, as implemented by 10 CFR part 1005.

(2) DOE Financial Assistance Rules (10 CFR part 600); and

(3) Other procedures which DOE may from time to time prescribe for the administration of financial assistance under this part.

(b) The budget period(s) covered by the financial assistance provided to a State according to § 420.11(b) or § 420.33 shall be consistent with 10 CFR part 600.

(c) Subawards are authorized under this part and are subject to the requirements of this part and 10 CFR part 600.

§ 420.4 Technical assistance.

At the request of the Governor of any State to DOE and subject to the availability of personnel and funds, DOE will provide information and technical assistance to the State in connection with effectuating the purposes of this part.

§ 420.5 Reports.

(a) Each State receiving financial assistance under this part shall submit to the cognizant Regional Office Director a quarterly program performance report and a quarterly financial status report.

(b) Reports under this section shall contain such information as the Secretary may prescribe in order to monitor effectively the implementation of a State's activities under this part.

(c) The reports shall be submitted within 30 days following the end of each calendar year quarter.

§ 420.6 Reference standards.

(a) The following standards which are not otherwise set forth in this part are incorporated by reference and made a part of this part. The following standards have been approved for incorporation by reference by the Director of the Federal Register in accordance with 5 U.S.C. 552(a) and 1 CFR part 51. A notice of any change in these materials will be published in the Federal Register. The standards incorporated by reference are available for inspection at the National Archives and Records Administration (NARA). For information on the availability of this material at NARA, call 202–741–6030, or go to: *http://www.archives.gov/federal_register/code_of_federal_regulations/ibr_locations.html.*

(b) The following standards are incorporated by reference in this part:

(1) The American Society of Heating, Refrigerating and Air-Conditioning Engineers (ASHRAE), 1791 Tullie Circle, N.E., Atlanta, Georgia 30329, (404) 636–8400/The Illuminating Engineering Society of North America (IESNA), 345 East 47th Street, New York, New York 10017, (212) 705–7913: (i) ASHRAE/IESNA 90.1–1989, entitled ''Energy Efficient Design of New Buildings Except Low-Rise Residential Buildings,'' with Addenda 90.1b-1992; Addenda 90.1d-1992; Addenda 90.1e-1992; Addenda 90.1g-1993; and Addenda 90.1i-1993, IBR approved for § 420.2 and § 420.15.

(2) The Council of American Building Officials (CABO), 5203 Leesburg Pike, Suite 708, Falls Church, Virginia 22041, (703) 931–4533: (i) The Model Energy Code, 1993, including Errata, IBR approved for § 420.2 and § 420.15.

[61 FR 35895, July 8, 1996, as amended at 69 FR 18803, Apr. 9, 2004]

Subpart B—Formula Grant Procedures

§ 420.10 Purpose.

This subpart specifies the procedures that apply to the Formula Grant part of the State Energy Program, which allows States to apply for financial assistance to undertake a wide range of required and optional energy-related activities provided for under § 420.15 and § 420.17. Funding for these activities is allocated to the States based on funds available for any fiscal year, as described under § 420.11.

§ 420.11 Allocation of funds among the States.

(a) The cognizant Regional Office Director shall provide financial assistance to each State having an approved annual application from funds available for any fiscal year to develop, modify, or implement a plan.

(b) DOE shall allocate financial assistance to develop, implement or modify plans among the States from funds available for any fiscal year, as follows:

(1) If the available funds equal $25.5 million, such funds shall be allocated to the States according to Table 1 of this section.

(2) The base allocation for each State is listed in Table 1.

TABLE 1—BASE ALLOCATION BY STATE

State/Territory	
Alabama	$381,000
Alaska	180,000
Arizona	344,000
Arkansas	307,000
California	1,602,000
Colorado	399,000
Connecticut	397,000
Delaware	164,000
District of Columbia	158,000
Florida	831,000
Georgia	534,000
Hawaii	170,000
Idaho	190,000
Illinois	1,150,000
Indiana	631,000
Iowa	373,000
Kansas	327,000
Kentucky	411,000
Louisiana	446,000
Maine	231,000
Maryland	486,000
Massachusetts	617,000
Michigan	973,000
Minnesota	584,000
Mississippi	279,000
Missouri	518,000

TABLE 1—BASE ALLOCATION BY STATE—Continued

State/Territory	
Montana	182,000
Nebraska	246,000
Nevada	196,000
New Hampshire	216,000
New Jersey	783,000
New Mexico	219,000
New York	1,633,000
North Carolina	564,000
North Dakota	172,000
Ohio	1,073,000
Oklahoma	352,000
Oregon	325,000
Pennsylvania	1,090,000
Rhode Island	199,000
South Carolina	340,000
South Dakota	168,000
Tennessee	476,000
Texas	1,322,000
Utah	242,000
Vermont	172,000
Virginia	571,000
Washington	438,000
West Virginia	286,000
Wisconsin	604,000
Wyoming	155,000
American Samoa	115,000
Guam	120,000
Northern Marianas	114,000
Puerto Rico	322,000
U.S. Virgin Islands	122,000
Total	25,500,000

(3) If the available funds for any fiscal year are less than $25.5 million, then the base allocation for each State shall be reduced proportionally.

(4) If the available funds exceed $25.5 million, $25.5 million shall be allocated as specified in Table 1 and any in excess of $25.5 million shall be allocated as follows:

(i) One-third of the available funds is divided among the States equally;

(ii) One-third of the available funds is divided on the basis of the population of the participating States as contained in the most recent reliable census data available from the Bureau of the Census, Department of Commerce, for all participating States at the time DOE needs to compute State formula shares; and

(iii) One-third of the available funds is divided on the basis of the energy consumption of the participating States as contained in the most recent State Energy Data Report available from DOE's Energy Information Administration.

(c) The budget period covered by the financial assistance provided to a State

according to § 420.11(b) shall be consistent with 10 CFR part 600.

§ 420.12 State matching contribution.

(a) Each State shall provide cash, in kind contributions, or both for SEP activities in an amount totaling not less than 20 percent of the financial assistance allocated to the State under § 420.11(b).

(b) Cash and in-kind contributions used to meet this State matching requirement are subject to the limitations on expenditures described in § 420.18(a), but are not subject to the 20 percent limitation in § 420.18(b).

(c) Nothing in this section shall be read to require a match for petroleum violation escrow funds used under this subpart.

[61 FR 35895, July 8, 1996, as amended at 64 FR 46114, Aug. 24, 1999]

§ 420.13 Annual State applications and amendments to State plans.

(a) To be eligible for financial assistance under this subpart, a State shall submit to the cognizant Regional Office Director an original and two copies of the annual application executed by the Governor, including an amended State plan or any amendments to the State plan needed to reflect changes in the activities the State is planning to undertake for the fiscal year concerned. The date for submission of the annual State application shall be set by DOE.

(b) An application shall include:

(1) A face sheet containing basic identifying information, on Standard Form (SF) 424;

(2) A description of the energy efficiency, renewable energy, and alternative transportation fuel goals to be achieved, including wherever practicable:

(i) An estimate of the energy to be saved by implementation of the State plan;

(ii) Why the goals were selected;

(iii) How the attainment of the goals will be measured by the State; and

(iv) How the program activities included in the State plan represent a strategy to achieve these goals;

(3) With respect to financial assistance under this subpart, a goal, consisting of an improvement of 25 percent or more in the efficiency of use of energy in the State concerned in the calendar year 2012, as compared to the calendar year 1990, and may contain interim goals;

(4) For the budget period for which financial assistance will be provided:

(i) A total program budget with supporting justification, broken out by object category and by source of funding;

(ii) The source and amount of State matching contribution;

(iii) A narrative statement detailing the nature of State plan amendments and of new program activities.

(iv) For each program activity, a budget and listing of milestones; and

(v) An explanation of how the minimum criteria for required program activities prescribed in § 420.15 have been implemented and are being maintained.

(5) If any of the activities being undertaken by the State in its plan have environmental impacts, a detailed description of the increase or decrease in environmental residuals expected from implementation of a plan defined insofar as possible through the use of information to be provided by DOE and an indication of how these environmental factors were considered in the selection of program activities.

(6) If a State is undertaking program activities involving purchase or installation of materials or equipment for weatherization of low-income housing, an explanation of how these activities would supplement and not supplant the existing DOE program under 10 CFR part 440.

(7) A reasonable assurance to DOE that it has established policies and procedures designed to assure that Federal financial assistance under this subpart will be used to supplement, and not to supplant, State and local funds, and to the extent practicable, to increase the amount of such funds that otherwise would be available, in the absence of such Federal financial assistance, for those activities set forth in the State Energy Program plan approved pursuant to this subpart;

(8) An assurance that the State shall comply with all applicable statutes and regulations in effect with respect to the periods for which it receives grant funding; and

(9) For informational purposes only, and not subject to DOE review, an energy emergency plan for an energy supply disruption, as designed by the State consistent with applicable Federal and State law including an implementation strategy or strategies (including regional coordination) for dealing with energy emergencies.

(c) The Governor may request an extension of the annual submission date by submitting a written request to the cognizant Regional Office Director not less than 15 days prior to the annual submission date. The extension shall be granted only if, in the cognizant Regional Office Director's judgment, acceptable and substantial justification is shown, and the extension would further objectives of the Act.

(d) The Secretary, or a designee, shall, at least once every three years from the submission date of each State plan, invite the Governor of the State to review and, if necessary, revise the energy conservation plan of such State. Such reviews should consider the energy conservation plans of other States within the region, and identify opportunities and actions that may be carried out in pursuit of common energy conservation goals.

[61 FR 35895, July 8, 1996, as amended at 62 FR 26727, May 14, 1997; 64 FR 46114, Aug. 24, 1999; 71 FR 57887, Oct. 2, 2006]

§ 420.14 Review and approval of annual State applications and amendments to State plans.

(a) After receipt of an application for financial assistance under this subpart and for approval of an amendment, if any, to a State plan, the cognizant Regional Office Director may request the State to submit within a reasonable period of time any revisions necessary to make the application complete and to bring the application into compliance with the requirements of subparts A and B of this part. The cognizant Regional Office Director shall attempt to resolve any dispute over the application informally and to seek voluntary compliance. If a State fails to submit timely appropriate revisions to complete an application or to bring it into compliance, the cognizant Regional Office Director may reject the application in a written decision, including a statement of reasons, which shall be subject to administrative review under § 420.19 of subparts A and B of this part.

(b) On or before 60 days from the date that a timely filed application is complete, the cognizant Regional Office Director shall—

(1) Approve the application in whole or in part to the extent that—

(i) The application conforms to the requirements of subparts A and B of this part;

(ii) The proposed program activities are consistent with a State's achievement of its energy conservation goals in accordance with § 420.13; and

(iii) The provisions of the application regarding program activities satisfy the minimum requirements prescribed by § 420.15 and § 420.17 as applicable;

(2) Approve the application in whole or in part subject to special conditions designed to ensure compliance with the requirements of subparts A and B of this part; or

(3) Disapprove the application if it does not conform to the requirements of subparts A and B of this part.

[61 FR 35895, July 8, 1996, as amended at 62 FR 26727, May 14, 1997; 64 FR 46114, Aug. 24, 1999]

§ 420.15 Minimum criteria for required program activities for plans.

A plan shall satisfy all of the following minimum criteria for required program activities.

(a) Mandatory lighting efficiency standards for public buildings shall:

(1) Be implemented throughout the State, except that the standards shall be adopted by the State as a model code for those local governments of the State for which the State's constitution reserves the exclusive authority to adopt and implement building standards within their jurisdictions;

(2) Apply to all public buildings (except for public buildings owned or leased by the United States), above a certain size, as determined by the State;

(3) For new public buildings, be no less stringent than the provisions of ASHRAE/IESNA 90.1–1989, and should be updated by enactment of, or support for the enactment into local codes or standards, which, at a minimum, are comparable to provisions of ASHRAE/

IESNA 90.1–1989 which is incorporated by reference in accordance with 5 U.S.C. 552 (a) and 1 CFR part 51. The availability of this incorporation by reference is given in § 420.6; and

(4) For existing public buildings, contain the elements deemed appropriate by the State.

(b) Program activities to promote the availability and use of carpools, vanpools, and public transportation shall:

(1) Have at least one of the following actions under implementation in at least one urbanized area with a population of 50,000 or more within the State or in the largest urbanized area within the State if that State does not have an urbanized area with a population of 50,000 or more:

(i) A carpool/vanpool matching and promotion campaign;

(ii) Park-and-ride lots;

(iii) Preferential traffic control for carpoolers and public transportation patrons;

(iv) Preferential parking for carpools and vanpools;

(v) Variable working schedules;

(vi) Improvement in transit level of service for public transportation;

(vii) Exemption of carpools and vanpools from regulated carrier status;

(viii) Parking taxes, parking fee regulations or surcharge on parking costs;

(ix) Full-cost parking fees for State and/or local government employees;

(x) Urban area traffic restrictions;

(xi) Geographical or time restrictions on automobile use; or

(xii) Area or facility tolls; and

(2) Be coordinated with the relevant Metropolitan Planning Organization, unless no Metropolitan Planning Organization exists in the urbanized area, and not be inconsistent with any applicable Federal requirements.

(c) Mandatory standards and policies affecting the procurement practices of the State and its political subdivisions to improve energy efficiency shall—

(1) With respect to all State procurement and with respect to procurement of political subdivisions to the extent determined feasible by the State, be under implementation; and

(2) Contain the elements deemed appropriate by the State to improve energy efficiency through the procurement practices of the State and its political subdivisions.

(d) Mandatory thermal efficiency standards for new and renovated buildings shall—

(1) Be implemented throughout the State, with respect to all buildings (other than buildings owned or leased by the United States, buildings whose peak design rate of energy usage for all purposes is less than one watt (3.4 Btu's per hour) per square foot of floor space for all purposes, or manufactured homes), except that the standards shall be adopted by the State as a model code for those local governments of the State for which the State's law reserves the exclusive authority to adopt and implement building standards within their jurisdictions;

(2) Take into account the exterior envelope physical characteristics, HVAC system selection and configuration, HVAC equipment performance and service water heating design and equipment selection;

(3) For all new commercial and multifamily high-rise buildings, be no less stringent than provisions of sections 7–12 of ASHRAE/IESNA 90.1–1989, and should be updated by enactment of, or support for the enactment into local codes or standards, which, at a minimum, are comparable to provisions of ASHRAE/IESNA 90.1–1989; and

(4) For all new single-family and multifamily low-rise residential buildings, be no less stringent than the Model Energy Code, 1993, and should be updated by enactment of, or support for the enactment into local codes or standards, which, at a minimum, are comparable to the Model Energy Code, 1993, which is incorporated by reference in accordance with 5 U.S.C. 552(a) and 1 CFR part 51. The availability of this incorporation by reference is given in § 420.6;

(5) For renovated buildings:

(i) Apply to those buildings determined by the State to be renovated buildings; and

(ii) Contain the elements deemed appropriate by the State regarding thermal efficiency standards for renovated buildings.

(e) A traffic law or regulation which permits the operator of a motor vehicle

to make a turn at a red light after stopping shall:

(1) Be in a State's motor vehicle code and under implementation throughout all political subdivisions of the State;

(2) Permit the operator of a motor vehicle to make a right turn (left turn with respect to the Virgin Islands) at a red traffic light after stopping except where specifically prohibited by a traffic sign for reasons of safety or except where generally prohibited in an urban enclave for reasons of safety; and

(3) Permit the operator of a motor vehicle to make a left turn from a one-way street to a one-way street (right turn with respect to the Virgin Islands) at a red traffic light after stopping except where specifically prohibited by a traffic sign for reasons of safety or except where generally prohibited in an urban enclave for reasons of safety.

(f) Procedures must exist for ensuring effective coordination among various local, State, and Federal energy efficiency, renewable energy and alternative transportation fuel programs within the State, including any program administered within the Office of Building Technology, State and Community Programs of the Department of Energy and the Low Income Home Energy Assistance Program administered by the Department of Health and Human Services.

[61 FR 35895, July 8, 1996, as amended at 62 FR 26727, May 14, 1997]

§ 420.16 Extensions for compliance with required program activities.

An extension of time by which a required program activity must be ready for implementation may be granted if DOE determines that the extension is justified. A written request for an extension, with accompanying justification and an action plan acceptable to DOE for achieving compliance in the shortest reasonable time, shall be made to the cognizant Regional Office Director. Any extension shall be only for the shortest reasonable time that DOE determines necessary to achieve compliance. The action plan shall contain a schedule for full compliance and shall identify and make the most reasonable commitment possible to provision of the resources necessary for achieving the scheduled compliance.

§ 420.17 Optional elements of State Energy Program plans.

(a) Other appropriate activities or programs may be included in the State plan. These activities may include, but are not limited to, the following:

(1) Program activities of public education to promote energy efficiency, renewable energy, and alternative transportation fuels;

(2) Program activities to increase transportation energy efficiency, including programs to accelerate the use of alternative transportation fuels for government vehicles, fleet vehicles, taxis, mass transit, and privately owned vehicles;

(3) Program activities for financing energy efficiency measures and renewable energy measures—

(i) Which may include loan programs and performance contracting programs for leveraging of additional public and private sector funds and program activities which allow rebates, grants, or other incentives for the purchase of energy efficiency measures and renewable energy measures; or

(ii) In addition to or in lieu of program activities described in paragraph (a)(3)(i) of this section, which may be used in connection with public or non-profit buildings owned and operated by a State, a political subdivision of a State or an agency or instrumentality of a State, or an organization exempt from taxation under section 501(c)(3) of the Internal Revenue Code of 1986 including public and private non-profit schools and hospitals, and local government buildings;

(4) Program activities for encouraging and for carrying out energy audits with respect to buildings and industrial facilities (including industrial processes) within the State;

(5) Program activities to promote the adoption of integrated energy plans which provide for:

(i) Periodic evaluation of a State's energy needs, available energy resources (including greater energy efficiency), and energy costs; and

(ii) Utilization of adequate and reliable energy supplies, including greater energy efficiency, that meet applicable safety, environmental, and policy requirements at the lowest cost;

(6) Program activities to promote energy efficiency in residential housing, such as:

(i) Program activities for development and promotion of energy efficiency rating systems for newly constructed housing and existing housing so that consumers can compare the energy efficiency of different housing; and

(ii) Program activities for the adoption of incentives for builders, utilities, and mortgage lenders to build, service, or finance energy efficient housing;

(7) Program activities to identify unfair or deceptive acts or practices which relate to the implementation of energy efficiency measures and renewable energy measures and to educate consumers concerning such acts or practices;

(8) Program activities to modify patterns of energy consumption so as to reduce peak demands for energy and improve the efficiency of energy supply systems, including electricity supply systems;

(9) Program activities to promote energy efficiency as an integral component of economic development planning conducted by State, local, or other governmental entities or by energy utilities;

(10) Program activities (enlisting appropriate trade and professional organizations in the development and financing of such programs) to provide training and education (including, if appropriate, training workshops, practice manuals, and testing for each area of energy efficiency technology) to building designers and contractors involved in building design and construction or in the sale, installation, and maintenance of energy systems and equipment to promote building energy efficiency;

(11) Program activities for the development of building retrofit standards and regulations, including retrofit ordinances enforced at the time of the sale of a building;

(12) Program activities to provide support for prefeasibility and feasibility studies for projects that utilize renewable energy and energy efficiency resource technologies in order to facilitate access to capital and credit for such projects;

(13) Program activities to facilitate and encourage the voluntary use of renewable energy technologies for eligible participants in Federal agency programs, including the Rural Electrification Administration and the Farmers Home Administration; and

(14) In accordance with paragraph (b) of this section, program activities to implement the Energy Technology Commercialization Services Program.

(b) This section prescribes requirements for establishing State-level Energy Technology Commercialization Services Program as an optional element of State plans.

(1) The program activities to implement the functions of the Energy Technology Commercialization Services Program shall:

(i) Aid small and start-up businesses in discovering useful and practical information relating to manufacturing and commercial production techniques and costs associated with new energy technologies;

(ii) Encourage the application of such information in order to solve energy technology product development and manufacturing problems;

(iii) Establish an Energy Technology Commercialization Services Program affiliated with an existing entity in each State;

(iv) Coordinate engineers and manufacturers to aid small and start-up businesses in solving specific technical problems and improving the cost effectiveness of methods for manufacturing new energy technologies;

(v) Assist small and start-up businesses in preparing the technical portions of proposals seeking financial assistance for new energy technology commercialization; and

(vi) Facilitate contract research between university faculty and students and small start-up businesses, in order to improve energy technology product development and independent quality control testing.

(2) Each State Energy Technology Commercialization Services Program shall develop and maintain a data base of engineering and scientific experts in

energy technologies and product commercialization interested in participating in the service. Such data base shall, at a minimum, include faculty of institutions of higher education, retired manufacturing experts, and National Laboratory personnel.

(3) The services provided by the Energy Technology Commercialization Services Program established under this subpart shall be available to any small or start-up business. Such service programs shall charge fees which are affordable to a party eligible for assistance, which shall be determined by examining factors, including the following: the costs of the services received; the need of the recipient for the services; and the ability of the recipient to pay for the services.

[61 FR 35895, July 8, 1996, as amended at 62 FR 26727, May 14, 1997; 64 FR 46114, Aug. 24, 1999]

§ 420.18 Expenditure prohibitions and limitations.

(a) No financial assistance provided to a State under this subpart shall be used:

(1) For construction, such as construction of mass transit systems and exclusive bus lanes, or for construction or repair of buildings or structures;

(2) To purchase land, a building or structure or any interest therein;

(3) To subsidize fares for public transportation;

(4) To subsidize utility rate demonstrations or State tax credits for energy conservation measures or renewable energy measures; or

(5) To conduct, or purchase equipment to conduct, research, development or demonstration of energy efficiency or renewable energy techniques and technologies not commercially available.

(b) No more than 20 percent of the financial assistance awarded to the State for this program shall be used to purchase office supplies, library materials, or other equipment whose purchase is not otherwise prohibited by this section. Nothing in this paragraph shall be read to apply this 20 percent limitation to petroleum violation escrow funds used under this subpart.

(c) Demonstrations of commercially available energy efficiency or renewable energy techniques and technologies are permitted, and are not subject to the prohibitions of § 420.18(a)(1), or to the limitation on equipment purchases of § 420.18(b).

(d) A State may use regular or revolving loan mechanisms to fund SEP services which are consistent with this subpart and which are included in the State's approved SEP plan. The State may use loan repayments and any interest on the loan funds only for activities which are consistent with this subpart and which are included in the State's approved SEP plan.

(e) A State may use funds under this subpart for the purchase and installation of equipment and materials for energy efficiency measures and renewable energy measures, including reasonable design costs, subject to the following terms and conditions:

(1) Such use must be included in the State's approved plan and, if funded by petroleum violation escrow funds, must be consistent with any judicial or administrative terms and conditions imposed upon State use of such funds;

(2) A State may use for these purposes no more than 50 percent of all funds allocated by the State to SEP in a given year, regardless of source, except that this limitation shall not include regular and revolving loan programs funded with petroleum violation escrow funds, and is subject to waiver by DOE for good cause. Loan documents shall ensure repayment of principal and interest within a reasonable period of time, and shall not include provisions of loan forgiveness.

(3) Buildings owned or leased by the United States are not eligible for energy efficiency measures or renewable energy measures under paragraph (e) of this section;

(4) Funds must be used to supplement and no funds may be used to supplant weatherization activities under the Weatherization Assistance Program for Low-Income Persons, under 10 CFR part 440;

(5) Subject to paragraph (f) of this section, a State may use a variety of financial incentives to fund purchases and installation of materials and equipment under paragraph (e) of this section including, but not limited to, regular loans, revolving loans, loan

buy-downs, performance contracting, rebates and grants.

(f) The following mechanisms are not allowed for funding the purchase and installation of materials and equipment under paragraph (e) of this section:

(1) Rebates for more than 50 percent of the total cost of purchasing and installing materials and equipment (States shall set appropriate restrictions and limits to insure the most efficient use of rebates); and

(2) Loan guarantees.

[61 FR 35895, July 8, 1996, as amended at 62 FR 26727, May 14, 1997; 64 FR 46114, Aug. 24, 1999]

§ 420.19 Administrative review.

(a) A State shall have 20 days from the date of receipt of a decision under § 420.14 to file a notice requesting administrative review in accordance with paragraph (b) of this section. If an applicant does not timely file such a notice, the decision under § 420.14 shall become final for DOE.

(b) A notice requesting administrative review shall be filed with the cognizant Regional Office Director and shall be accompanied by a written statement containing supporting arguments. If the cognizant Regional Office Director has disapproved an entire application for financial assistance, the State may request a public hearing.

(c) A notice or any other document shall be deemed filed under this section upon receipt.

(d) On or before 15 days from receipt of a notice requesting administrative review which is timely filed, the cognizant Regional Office Director shall forward to the Deputy Assistant Secretary, the notice requesting administrative review, the decision under § 420.14 as to which administrative review is sought, a draft recommended final decision for concurrence, and any other relevant material.

(e) If the State requests a public hearing on the disapproval of an entire application for financial assistance under this subpart, the Deputy Assistant Secretary, within 15 days, shall give actual notice to the State and FEDERAL REGISTER notice of the date, place, time, and procedures which shall apply to the public hearing. Any public hearing under this section shall be informal and legislative in nature.

(f) On or before 45 days from receipt of documents under paragraph (d) of this section or the conclusion of the public hearing, whichever is later, the Deputy Assistant Secretary shall concur in, concur in as modified, or issue a substitute for the recommended decision of the cognizant Regional Office Director.

(g) On or before 15 days from the date of receipt of the determination under paragraph (f) of this section, the Governor may file an application for discretionary review by the Assistant Secretary. On or before 15 days from filing, the Assistant Secretary shall send a notice to the Governor stating whether the Deputy Assistant Secretary's determination will be reviewed. If the Assistant Secretary grants a review, a decision shall be issued no later than 60 days from the date review is granted. The Assistant Secretary may not issue a notice or decision under this paragraph without the concurrence of the DOE Office of General Counsel.

(h) A decision under paragraph (f) of this section shall be final for DOE if there is no review under paragraph (g) of this section. If there is review under paragraph (g) of this section, the decision thereunder shall be final for DOE and no appeal shall lie elsewhere in DOE.

(i) Prior to the effective date of the termination or suspension of a grant award for failure to implement an approved State plan in compliance with the requirements of this subpart, a grantee shall have the right to written notice of the basis for the enforcement action and of the opportunity for public hearing before the DOE Financial Assistance Appeals Board notwithstanding any provisions to the contrary of 10 CFR 600.22, 600.24, 600.25, and 600.243. To obtain a public hearing, the grantee must request an evidentiary hearing, with prior FEDERAL REGISTER notice, in the election letter submitted under Rule 2 of 10 CFR 1024.4 and the request shall be granted notwithstanding any provisions to the contrary of Rule 2.

[61 FR 35895, July 8, 1996, as amended at 64 FR 46114, Aug. 24, 1999]

Subpart C—Implementation of Special Projects Financial Assistance

§ 420.30 Purpose and scope.

(a) This subpart sets forth DOE's policies and procedures for implementing special projects financial assistance under this part.

(b) For years in which such funding is available, States may apply for financial assistance to undertake a variety of State-oriented energy-related special projects activities in addition to the funds provided under the regular SEP grants.

(c) The types of funded activities may vary from year to year, and from State to State, depending upon funds available for each type of activity and DOE and State priorities.

(d) A number of end-use sector programs in the Office of Energy Efficiency and Renewable Energy participate in the funding of these activities, and the projects must meet the requirements of those programs.

(e) The purposes of the special project activities are:

(1) To utilize States to accelerate deployment of energy efficiency, renewable energy, and alternative transportation fuel technologies;

(2) To facilitate the commercialization of emerging and underutilized energy efficiency and renewable energy technologies; and

(3) To increase the responsiveness of Federally funded technology development efforts to the needs of the marketplace.

§ 420.31 Notice of availability.

(a) If in any fiscal year DOE has funds available for special projects, DOE shall publish in the FEDERAL REGISTER one or more notice(s) of availability of SEP special projects financial assistance.

(b) Each notice of availability shall cite this part and shall include:

(1) Brief descriptions of the activities for which funding is available;

(2) The amount of money DOE has available or estimates it will have available for award for each type of activity, and the total amount available;

(3) The program official to contact for additional information, application forms, and the program guidance/solicitation document; and

(4) The dates when:

(i) The program guidance/solicitation will be available; and

(ii) The applications for financial assistance must be received by DOE.

§ 420.32 Program guidance/solicitation.

After the publication of the notice of availability in the FEDERAL REGISTER, DOE shall, upon request, provide States interested in applying for one or more project(s) under the special projects financial assistance with a detailed program guidance/solicitation that will include:

(a) The control number of the program;

(b) The expected duration of DOE support or period of performance;

(c) An application form or the format to be used, location for application submission, and number of copies required;

(d) The name of the DOE program office contact from whom to seek additional information;

(e) Detailed descriptions of each type of program activity for which financial assistance is being offered;

(f) The amount of money available for award, together with any limitations as to maximum or minimum amounts expected to be awarded;

(g) Deadlines for submitting applications;

(h) Evaluation criteria that DOE will apply in the selection and ranking process for applications for each program activity;

(i) The evaluation process to be applied to each type of program activity;

(j) A listing of program policy factors if any that DOE may use in the final selection process, in addition to the results of the evaluations, including:

(1) The importance and relevance of the proposed applications to SEP and the participating programs in the Office of Energy Efficiency and Renewable Energy; and

(2) Geographical diversity;

(k) Reporting requirements;

(l) References to:

(1) Statutory authority for the program;

(2) Applicable rules; and

(3) Other terms and conditions applicable to awards made under the program guidance/solicitation; and

(m) A statement that DOE reserves the right to fund in whole or in part, any, all, or none of the applications submitted.

§ 420.33 Application requirements.

(a) Consistent with § 420.32 of this part, DOE shall set forth general and special project activity-specific requirements for applications for special projects financial assistance in the program guidance/solicitation.

(b) In addition to any other requirements, all applications shall provide:

(1) A detailed description of the proposed project, including the objectives of the project in relationship to DOE's program and the State's plan for carrying it out;

(2) A detailed budget for the entire proposed period of support, with written justification sufficient to evaluate the itemized list of costs provided on the entire project; and

(3) An implementation schedule for carrying out the project.

(c) DOE may, subsequent to receipt of an application, request additional budgetary information from a State when necessary for clarification or to make informed preaward determinations.

(d) DOE may return an application which does not include all information and documentation required by this subpart, 10 CFR part 600, or the program guidance/solicitation, when the nature of the omission precludes review of the application.

[61 FR 35895, July 8, 1996, as amended at 64 FR 46114, Aug. 24, 1999]

§ 420.34 Matching contributions or cost-sharing.

DOE may require (as set forth in the program guidance/solicitation) States to provide either:

(a) A matching contribution of at least a specified percentage of the Federal financial assistance award; or

(b) A specified share of the total cost of the project for which financial assistance is provided.

§ 420.35 Application evaluation.

(a) DOE staff at the cognizant Regional Office shall perform an initial review of all applications to ensure that the State has provided the information required by this subpart, 10 CFR part 600, and the program guidance/solicitation.

(b) DOE shall group, and technically evaluate according to program activity, all applications determined to be complete and satisfactory.

(c) DOE shall select evaluators on the basis of their professional qualifications and expertise relating to the particular program activity being evaluated.

(1) DOE anticipates that evaluators will primarily be DOE employees; but

(2) If DOE uses non-DOE evaluators, DOE shall require them to comply with all applicable DOE rules or directives concerning the use of outside evaluators.

[61 FR 35895, July 8, 1996, as amended at 64 FR 46114, Aug. 24, 1999]

§ 420.36 Evaluation criteria.

The evaluation criteria, including program activity-specific criteria, will be set forth in the program guidance/solicitation document.

§ 420.37 Selection.

(a) DOE may make selection of applications for award based on:

(1) The findings of the technical evaluations;

(2) The priorities of DOE, SEP, and the participating program offices;

(3) The availability of funds for the various special project activities; and

(4) Any program policy factors set forth in the program guidance/solicitation.

(b) The Director, Office of State and Community Programs makes the final selections of projects to be awarded financial assistance.

§ 420.38 Special projects expenditure prohibitions and limitations.

(a) Expenditures under the special projects are subject to 10 CFR part 600 and to any prohibitions and limitations required by the DOE programs that are providing the special projects funding.

(b) DOE must state any expenditure prohibitions or limitations specific to a particular category of special projects in the annual SEP special projects solicitation/guidance.

[64 FR 46114, Aug. 24, 1999]

PART 429—CERTIFICATION, COMPLIANCE, AND ENFORCEMENT FOR CONSUMER PRODUCTS AND COMMERCIAL AND INDUSTRIAL EQUIPMENT

Subpart A—General Provisions

Sec.
429.1 Purpose and scope.
429.2 Definitions.
429.4 Materials incorporated by reference.
429.5 Imported products.
429.6 Exported products.
429.7 Confidentiality.
429.8 Subpoenas.

Subpart B—Certification

429.10 Purpose and scope.
429.11 General requirements applicable to units to be tested.
429.12 General requirements applicable to certification reports.
429.13 Testing requirements.
429.14 Residential refrigerators, refrigerator-freezers and freezers.
429.15 Room air conditioners.
429.16 Central air conditioners and heat pumps.
429.17 Residential water heaters.
429.18 Residential furnaces.
429.19 Dishwashers.
429.20 Residential clothes washers.
429.21 Residential clothes dryers.
429.22 Direct heating equipment.
429.23 Conventional cooking tops, conventional ovens, microwave ovens.
429.24 Pool heaters.
429.25 Television sets.
429.26 Fluorescent lamp ballasts.
429.27 General service fluorescent lamps, general service incandescent lamps, and incandescent reflector lamps.
429.28 Faucets.
429.29 Showerheads.
429.30 Water closets.
429.31 Urinals.
429.32 Ceiling fans.
429.33 Ceiling fan light kits.
429.34 Torchieres.
429.35 Bare or covered medium base compact fluorescent lamps.
429.36 Dehumidifiers.
429.37 Class A external power supplies.
429.38 Non-class A external power supplies. [Reserved]
429.39 Battery chargers.
429.40 Candelabra base incandescent lamps and intermediate base incandescent lamps.
429.41 Electric motors. [Reserved]
429.42 Commercial refrigerators, freezers, and refrigerator-freezers.
429.43 Commercial heating, ventilating, air-conditioning (HVAC) equipment.
429.44 Commercial water heating (WH) equipment.
429.45 Automatic commercial ice makers.
429.46 Commercial clothes washers.
429.47 Distribution transformers.
429.48 Illuminated exit signs.
429.49 Traffic signal modules and pedestrian modules.
429.50 Commercial unit heaters.
429.51 Commercial pre-rinse spray valves.
429.52 Refrigerated bottled or canned beverage vending machines.
429.53 Walk-in coolers and Walk-in freezers.
429.54 Metal halide lamp ballasts and fixtures.
429.70 Alternative methods for determining efficiency or energy use.
429.71 Maintenance of records.
APPENDIX A TO SUBPART B OF PART 429—STUDENT'S T-DISTRIBUTION VALUES FOR CERTIFICATION TESTING

Subpart C—Enforcement

429.100 Purpose and scope.
429.102 Prohibited acts subjecting persons to enforcement action.
429.104 Assessment testing.
429.106 Investigation of compliance.
429.110 Enforcement testing.
429.114 Notice of noncompliance determination to cease distribution of a basic model.
429.116 Additional certification testing requirements.
429.118 Injunctions.
429.120 Maximum civil penalty.
429.122 Notice of proposed civil penalty.
429.124 Election of procedures.
429.126 Administrative law judge hearing and appeal.
429.128 Immediate issuance of order assessing civil penalty.
429.130 Collection of civil penalties.
429.132 Compromise and settlement.
APPENDIX A TO SUBPART C OF PART 429—SAMPLING PLAN FOR ENFORCEMENT TESTING OF COVERED PRODUCTS AND CERTAIN HIGH-VOLUME COVERED EQUIPMENT
APPENDIX B TO SUBPART C OF PART 429—SAMPLING PLAN FOR ENFORCEMENT TESTING OF COVERED COMMERCIAL EQUIPMENT AND CERTAIN LOW-VOLUME COVERED PRODUCTS
APPENDIX C TO SUBPART C OF PART 429—SAMPLING PLAN FOR ENFORCEMENT TESTING OF DISTRIBUTION TRANSFORMERS

AUTHORITY: 42 U.S.C. 6291–6317.

SOURCE: 76 FR 12451, Mar. 7, 2011, unless otherwise noted.

Subpart A—General Provisions

§ 429.1 Purpose and scope.

This part sets forth the procedures to be followed for certification, determination and enforcement of compliance of covered products and covered equipment with the applicable conservation standards set forth in parts 430 and 431 of this subchapter. This part does not cover motors or electric motors as defined in § 431.12, and all references to ''covered equipment'' in this part exclude such motors.

§ 429.2 Definitions.

(a) The definitions found in §§ 430.2, 431.2, 431.62, 431.72, 431.82, 431.92, 431.102, 431.132, 431.152, 431.172, 431.192, 431.202, 431.222, 431.242, 431.262, 431.292, 431.302, 431.322, and 431.442 apply for purposes of this part.

(b) The following definitions apply for the purposes of this part. Any words or terms defined in this section or elsewhere in this part shall be defined as provided in sections 321 and 340 of the Energy Policy Conservation Act, as amended, hereinafter referred to as ''the Act.''

Energy conservation standard means any standards meeting the definitions of that term in 42 U.S.C. 6291(6) and 42 U.S.C. 6311(18) as well as any other water conservation standards and design requirements found in this part or parts 430 or 431.

Manufacturer's model number means the identifier used by a manufacturer to uniquely identify the group of identical or essentially identical covered products or covered equipment to which a particular unit belongs. The manufacturer's model number typically appears on the product nameplates, in product catalogs and in other product advertising literature.

§ 429.4 Materials incorporated by reference.

(a) General. We incorporate by reference the following standards into part 429. The material listed has been approved for incorporation by reference by the Director of the Federal Register in accordance with 5 U.S.C. 552(a) and 1 CFR part 51. Any subsequent amendment to a standard by the standard-setting organization will not affect the DOE regulations unless and until amended by DOE. Material is incorporated as it exists on the date of the approval and a notice of any change in the material will be published in the FEDERAL REGISTER. All approved material is available for inspection at the National Archives and Records Administration (NARA). For information on the availability of this material at NARA, call 202–741–6030, or go to: *http://www.archives.gov/federal_register/code_of_federal_regulations/ibr_locations.html*. Also, this material is available for inspection at U.S. Department of Energy, Office of Energy Efficiency and Renewable Energy, Building Technologies Program, 6th Floor, 950 L'Enfant Plaza, SW., Washington, DC 20024, (202) 586–2945, or go to: *http://www1.eere.energy.gov/buildings/appliance_standards/*. Standards can be obtained from the sources below.

(b) *AHAM*. Association of Home Appliance Manufacturers, 1111 19th Street, NW., Suite 402, Washington, DC 20036, 202–872–5955, or go to *http://www.aham.org*.

(1) ANSI/AHAM DW–1–1992, American National Standard, Household Electric Dishwashers, approved February 6, 1992, IBR approved for § 429.19.

(2) ANSI/AHAM DW–1–2010, *Household Electric Dishwashers*, (ANSI approved September 18, 2010), IBR approved for § 429.19.

(c) *ISO*. International Organization for Standardization, ch. de la Voie-Creuse CP 56 CH–1211 Geneva 20 Switzerland, telephone +41 22 749 01 11, or go to *http://www.iso.org/iso*.

(1) International Organization for Standardization (ISO)/International Electrotechnical Commission, (''ISO/IEC 17025:2005(E)''), ''General requirements for the competence of testing and calibration laboratories'', Second edition, May 15, 2005, IBR approved for § 429.110.

(2) [Reserved]

[76 FR 12451, Mar. 7, 2011, as amended at 77 FR 65977, Oct. 31, 2012]

§ 429.5 Imported products.

(a) Any person importing any covered product or covered equipment into the United States shall comply with the provisions of this part, and parts 430 and 431, and is subject to the remedies of this part.

(b) Any covered product or covered equipment offered for importation in violation of this part, or part 430 or 431, shall be refused admission into the customs territory of the United States under rules issued by the U.S. Customs and Border Protection (CBP) and subject to further remedies as provided by law, except that CBP may, by such rules, authorize the importation of such covered product or covered equipment upon such terms and conditions (including the furnishing of a bond) as may appear to CBP appropriate to ensure that such covered product or covered equipment will not violate this part, or part 430 or 431, or will be exported or abandoned to the United States.

§ 429.6 Exported products.

This part, and parts 430 and 431, shall not apply to any covered product or covered equipment if:

(a) Such covered product or covered equipment is manufactured, sold, or held for sale for export from the United States or is imported for export;

(b) Such covered product or covered equipment or any container in which it is enclosed, when distributed in commerce, bears a stamp or label stating ''NOT FOR SALE FOR USE IN THE UNITED STATES''; and

(c) Such product is, in fact, not distributed in commerce for use in the United States.

§ 429.7 Confidentiality.

(a) The following records are not exempt from public disclosure: The brand name, and applicable model number(s), and the energy or water rating submitted by manufacturers to DOE pursuant to § 429.19(b)(13).

(b) Pursuant to the provisions of 10 CFR 1004.11(e), any person submitting information or data which the person believes to be confidential and exempt by law from public disclosure should—at the time of submission—submit:

(1) One complete copy, and one copy from which the information believed to be confidential has been deleted.

(2) A request for confidentiality containing the submitter's views on the reasons for withholding the information from disclosure, including:

(i) A description of the items sought to be withheld from public disclosure,

(ii) Whether and why such items are customarily treated as confidential within the industry,

(iii) Whether the information is generally known by or available from other sources,

(iv) Whether the information has previously been made available to others without obligation concerning its confidentiality,

(v) An explanation of the competitive injury to the submitting person which would result from public disclosure,

(vi) A date upon which such information might lose its confidential nature due to the passage of time, and

(vii) Why disclosure of the information would be contrary to the public interest.

(c) In accordance with the procedures established in 10 CFR 1004.11(e), DOE shall make its own determination with regard to any claim that information submitted be exempt from public disclosure.

§ 429.8 Subpoena.

For purposes of carrying out parts 429, 430, and 431, the General Counsel (or delegee), may sign and issue subpoenas for the attendance and testimony of witnesses and the production of relevant books, records, papers, and other documents, and administer oaths. Witnesses summoned under the provisions of this section shall be paid the same fees and mileage as are paid to witnesses in the courts of the United States. In case of contumacy by, or refusal to obey a subpoena served, upon any persons subject to parts 429, 430, or 431, the General Counsel (or delegee) may seek an order from the District Court of the United States for any District in which such person is found or resides or transacts business requiring such person to appear and give testimony, or to appear and produce documents. Failure to obey such order is

punishable by such court as contempt thereof.

Subpart B—Certification

§ 429.10 Purpose and scope.

This subpart sets forth the procedures for manufacturers to certify that their covered products and covered equipment comply with the applicable energy conservation standards.

§ 429.11 General sampling requirements for selecting units to be tested.

(a) When testing of covered products or covered equipment is required to comply with section 323(c) of the Act, or to comply with rules prescribed under sections 324, 325, or 342, 344, 345 or 346 of the Act, a sample comprised of production units (or units representative of production units) of the basic model being tested shall be selected at random and tested, and shall meet the criteria found in §§ 429.14 through 429.54 of this subpart. Components of similar design may be substituted without additional testing if the substitution does not affect energy or water consumption. Any represented values of measures of energy efficiency, water efficiency, energy consumption, or water consumption for all individual models represented by a given basic model must be the same.

(b) Unless otherwise specified, the minimum number of units tested shall be no less than two (except where a different minimum limit is specified in §§ 429.14 through 429.54 of this subpart); and

§ 429.12 General requirements applicable to certification reports.

(a) *Certification*. Each manufacturer, before distributing in commerce any basic model of a covered product or covered equipment subject to an applicable energy conservation standard set forth in parts 430 or 431, and annually thereafter on or before the dates provided in paragraph (d) of this section, shall submit a certification report to DOE certifying that each basic model meets the applicable energy conservation standard(s). The certification report(s) must be submitted to DOE in accordance with the submission procedures of paragraph (h) of this section.

(b) *Certification report*. A certification report shall include a compliance statement (*see* paragraph (c) of this section), and for each basic model, the information listed in this paragraph (b):

(1) Product or equipment type;

(2) Product or equipment class (as denoted in the provisions of part 430 or 431 containing the applicable energy conservation standard);

(3) Manufacturer's name and address;

(4) Private labeler's name(s) and address (if applicable);

(5) Brand name, if applicable;

(6) For each brand, the basic model number and the individual manufacturer's model numbers covered by that basic model with the following exceptions: For external power supplies that certify based on design families, the design family model number and the individual manufacturer's model numbers covered by that design family must be submitted for each brand. For walk-in coolers, the basic model number for each brand must be submitted. For distribution transformers, the basic model number or kVA grouping model number (depending on the certification method) for each brand must be submitted;

(7) Whether the submission is for a new model, a discontinued model, a correction to a previously submitted model, data on a carryover model, or a model that has been found in violation of a voluntary industry certification program;

(8) The test sample size (*i.e.*, number of units tested for each basic model);

(9) Certifying party's U.S. Customs and Border Protection (CBP) importer identification numbers assigned by CBP pursuant to 19 CFR 24.5, if applicable;

(10) Whether certification is based upon any waiver of test procedure requirements under § 430.27 or § 431.401 and the date of such waivers;

(11) Whether certification is based upon any exception relief from an applicable energy conservation standard and the date such relief was issued by DOE's Office of Hearing and Appeals;

(12) Whether certification is based upon the use of an alternate way of determining measures of energy conservation (*e.g.*, an ARM or AEDM), or other method of testing, for determining measures of energy conservation and the approval date, if applicable, of any such alternate rating, testing, or efficiency determination method; and

(13) Product specific information listed in §§ 429.14 through 429.54 of this part.

(c) *Compliance statement*. The compliance statement required by paragraph (b) of this section shall include the date, the name of the company official signing the statement, and his or her signature, title, address, telephone number, and facsimile number and shall certify that:

(1) The basic model(s) complies with the applicable energy conservation standard(s);

(2) All required testing has been conducted in conformance with the applicable test requirements prescribed in parts 429, 430 and 431, as appropriate, or in accordance with the terms of an applicable test procedure waiver;

(3) All information reported in the certification report is true, accurate, and complete; and

(4) The manufacturer is aware of the penalties associated with violations of the Act, the regulations thereunder, and 18 U.S.C. 1001 which prohibits knowingly making false statements to the Federal Government.

(d) *Annual filing*. All data required by paragraphs (a) through (c) shall be submitted to DOE annually, on or before the following dates:

Product category	Deadline for data submission
Fluorescent lamp ballasts, Medium base compact fluorescent lamps, Incandescent reflector lamps, General service fluorescent lamps, General service incandescent lamps, Intermediate base incandescent lamps, Candelabra base incandescent lamps, Residential ceiling fans, Residential ceiling fan light kits, Residential showerheads, Residential faucets, Residential water closets, and Residential urinals.	Mar. 1.
Residential water heater, Residential furnaces, Residential boilers, Residential pool heaters, Commercial water heaters, Commercial hot water supply boilers, Commercial unfired hot water storage tanks, Commercial packaged boilers, Commercial warm air furnaces, and Commercial unit heaters.	May 1
Residential dishwashers, Commercial prerinse spray valves, Illuminated exit signs, Traffic signal modules, Pedestrian modules, and Distribution transformers.	June 1.
Room air conditioners, Residential central air conditioners, Residential central heat pumps, Small duct high velocity system, Space constrained products, Commercial package air-conditioning and heating equipment, Packaged terminal air conditioners, Packaged terminal heat pumps, and Single package vertical units.	July 1.
Residential refrigerators, Residential refrigerators-freezers, Residential freezers, Commercial refrigerator, freezer, and refrigerator-freezer, Automatic commercial automatic ice makers, Refrigerated bottled or canned beverage vending machine, Walk-in coolers, and Walk-in freezers.	Aug. 1.
Torchieres, Residential dehumidifiers, Metal halide lamp fixtures, and External power supplies	Sept. 1.
Residential clothes washers, Residential clothes dryers, Residential direct heating equipment, Residential cooking products, and Commercial clothes washers.	Oct. 1.

(e) *New model filing*. (1) In addition to the annual filing schedule in paragraph (d) of this section, any new basic models must be certified pursuant to paragraph (a) of this section before distribution in commerce. A modification to a model that increases the model's energy or water consumption or decreases its efficiency resulting in rerating must be certified as a new basic model pursuant to paragraph (a) of this section.

(2) For general service fluorescent lamps or incandescent reflector lamps: Prior to or concurrent with the distribution of a new basic model each manufacturer shall submit an initial certification report listing the basic model number, lamp wattage, and date of first manufacture (*i.e.*, production date) for that basic model. The certification report must also state how the manufacturer determined that the lamp meets or exceeds the energy conservation standards, including a description of any testing or analysis the manufacturer performed. Manufacturers of general service fluorescent lamps and incandescent reflector lamps shall submit the certification report required by paragraph (b) of this section within one year after the first date of new model manufacture.

(3) For distribution transformers, the manufacturer shall submit all information required in paragraphs (b) and (c) of this section for the new basic model, unless the manufacturer has previously submitted to the Department a certification report for a basic model of distribution transformer that is in the same kVA grouping as the new basic model.

(f) *Discontinued model filing.* When production of a basic model has ceased and it is no longer being sold or offered for sale by the manufacturer or private labeler, the manufacturer shall report this discontinued status to DOE as part of the next annual certification report following such cessation. For each basic model, the report shall include the information specified in paragraphs (b)(1) through (b)(7) of this section.

(g) *Third party submitters.* A manufacturer may elect to use a third party to submit the certification report to DOE (for example, a trade association, independent test lab, or other authorized representative, including a private labeler acting as a third party submitter on behalf of a manufacturer); however, the manufacturer is responsible for submission of the certification report to DOE. DOE may refuse to accept certification reports from third party submitters who have failed to submit reports in accordance with the rules of this part. The third party submitter must complete the compliance statement as part of the certification report. Each manufacturer using a third party submitter must have an authorization form on file with DOE. The authorization form includes a compliance statement, specifies the third party authorized to submit certification reports on the manufacturer's behalf and provides the contact information and signature of a company official.

(h) *Method of submission.* Reports required by this section must be submitted to DOE electronically at *http://www.regulations.doe.gov/ccms* (CCMS). A manufacturer or third party submitter can find product-specific templates for each covered product or covered equipment with certification requirements online at *https://www.regulations.doe.gov/ccms/templates.html*. Manufacturers and third party submitters must submit a registration form, signed by an officer of the company, in order to obtain access to CCMS.

(i) *Compliance dates.* For any product subject to an applicable energy conservation standard for which the compliance date has not yet occurred, a certification report must be submitted not later than the compliance date for the applicable energy conservation standard. The covered products enumerated below are subject to the stated compliance dates for initial certification:

(1) Commercial warm air furnaces, packaged terminal air conditioners, and packaged terminal heat pumps, July 1, 2014;

(2) Commercial gas-fired and oil-fired instantaneous water heaters less than 10 gallons and commercial gas-fired and oil-fired hot water supply boilers less than 10 gallons, October 1, 2014;

(3) All other types of covered commercial water heaters except those specified in paragraph (i)(2) of this section, commercial packaged boilers with input capacities less than or equal to 2.5 million Btu/h, and self-contained commercial refrigeration equipment with solid or transparent doors, December 31, 2014;

(4) Variable refrigerant flow air conditioners and heat pumps, March 31, 2015;

(5) Small, large, or very large air-cooled, water-cooled, evaporatively-cooled, and water-source commercial air conditioning and heating equipment, single package vertical units, computer room air conditioners, commercial packaged boilers with input capacities greater than 2.5 million Btu/h, and all other types of commercial refrigeration equipment except those specified in paragraph (i)(3) of this section, July 1, 2015.

[76 FR 12451, Mar. 7, 2011; 76 FR 24762, May 2, 2011, as amended at 76 FR 38292, June 30, 2011; 76 FR 65365, Oct. 21, 2011; 77 FR 76830, Dec. 31, 2012; 78 FR 79593, Dec. 31, 2013]

§ 429.13 Testing requirements.

(a) The determination that a basic model complies with an applicable energy conservation standard shall be determined from the values derived pursuant to the applicable testing and sampling requirements set forth in

parts 429, 430 and 431. The determination that a basic model complies with the applicable design standard shall be based upon the incorporation of specific design requirements in parts 430 and 431 or as specified in section 325 and 342 of the Act.

(b) Where DOE has determined a particular entity is in noncompliance with an applicable standard or certification requirement, DOE may impose additional testing requirements as a remedial measure.

§ 429.14 Residential refrigerators, refrigerator-freezers and freezers.

(a) *Sampling plan for selection of units for testing.*

(1) The requirements of § 429.11 are applicable to residential refrigerators, refrigerator-freezers and freezers; and

(2) For each basic model of residential refrigerators, refrigerator-freezers, and freezers, a sample of sufficient size shall be randomly selected and tested to ensure that—

(i) Any represented value of estimated annual operating cost, energy consumption, or other measure of energy consumption of a basic model for which consumers would favor lower values shall be greater than or equal to the higher of:

(A) The mean of the sample, where:

$$\bar{x} = \frac{1}{n}\sum_{i=1}^{n} x_i$$

and, $\bar{x}$ is the sample mean; n is the number of samples; and x_i is the ith sample;

or,

(B) The upper 95 percent confidence limit (UCL) of the true mean divided by 1.10, where:

$$UCL = \bar{x} + t_{.95}\left(\frac{s}{\sqrt{n}}\right)$$

And $\bar{x}$ is the sample mean; s is the sample standard deviation; n is the number of samples; and $t_{0.95}$ is the t statistic for a 95% one-tailed confidence interval with n-1 degrees of freedom (from Appendix A).

and

(ii) Any represented value of the energy factor or other measure of energy consumption of a basic model for which consumers would favor higher values shall be less than or equal to the lower of:

(A) The mean of the sample, where:

$$\bar{x} = \frac{1}{n}\sum_{i=1}^{n} x_i$$

and, $\bar{x}$ is the sample mean; n is the number of samples; and x_i is the ith sample;

or,

(B) The lower 95 percent confidence limit (LCL) of the true mean divided by 0.90, where:

$$LCL = \bar{x} - t_{.95}\left(\frac{s}{\sqrt{n}}\right)$$

And $\bar{x}$ is the sample mean; s is the sample standard deviation; n is the number of samples; and $t_{0.95}$ is the t statistic for a 95% one-tailed confidence interval with n-1 degrees of freedom (from Appendix A).

(b) *Certification reports.*

(1) The requirements of § 429.12 are applicable to residential refrigerators, refrigerator-freezers and freezers; and

(2) Pursuant to § 429.12(b)(13), a certification report shall include the following public product-specific information: The annual energy use in kilowatt hours per year (kWh/yr), total adjusted volume in cubic feet (cu ft), and measured height of the unit.

(3) Pursuant to § 429.12(b)(13), a certification report shall include the following additional product-specific information: whether the basic model has variable defrost control (in which case, manufacturers must also report the values, if any, of CT_L and CT_M (For an example, *see* section 5.2.1.3 in appendix A to subpart B of part 430) used in the calculation of energy consumption), whether the basic model has variable anti-sweat heater control (in which case, manufacturers must also report the values of heater Watts at the ten humidity levels 5%, 15%, through 95% used to calculate the variable anti-sweat heater ''Correction Factor''), and whether testing has been conducted with modifications to the standard temperature sensor locations specified by the figures referenced in section 5.1 of appendices A1, B1, A, and B to subpart B of part 430.

[76 FR 12451, Mar. 7, 2011; 76 FR 24762, May 2, 2011]

§ 429.15 Room air conditioners.

(a) *Sampling plan for selection of units for testing.* (1) The requirements of § 429.11 are applicable to room air conditioners; and

(2) For each basic model of room air conditioners, a sample of sufficient size shall be randomly selected and tested to ensure that—

(i) Any represented value of estimated annual operating cost, energy consumption or other measure of energy consumption of a basic model for which consumers would favor lower values shall be greater than or equal to the higher of:

(A) The mean of the sample, where:

$$\bar{x} = \frac{1}{n}\sum_{i=1}^{n} x_i$$

and, $\bar{x}$ is the sample mean; n is the number of samples; and x_i is the ith sample; or,

(B) The upper 97½ percent confidence limit (UCL) of the true mean divided by 1.05, where:

$$UCL = \bar{x} + t_{.975}\left(\frac{s}{\sqrt{n}}\right)$$

And $\bar{x}$ is the sample mean; s is the sample standard deviation; n is the number of samples; and $t_{0.975}$ is the t statistic for a 97.5% one-tailed confidence interval with n-1 degrees of freedom (from Appendix A).

and

(ii) Any represented value of the energy efficiency ratio or other measure of energy consumption of a basic model for which consumers would favor higher values shall be less than or equal to the lower of:

(A) The mean of the sample, where:

$$\bar{x} = \frac{1}{n}\sum_{i=1}^{n} x_i$$

and, $\bar{x}$ is the sample mean; n is the number of samples; and x_i is the ith sample;

or,

(B) The lower 97½ percent confidence limit (LCL) of the true mean divided by 0.95, where:

$$LCL = \bar{x} - t_{.975}\left(\frac{s}{\sqrt{n}}\right)$$

And $\bar{x}$ is the sample mean; s is the sample standard deviation; n is the number of samples; and $t_{0.975}$ is the t statistic for a 97.5% one-tailed confidence interval with n-1 degrees of freedom (from Appendix A).

(b) *Certification reports.* (1) The requirements of §429.12 are applicable to room air conditioners; and

(2) Pursuant to §429.12(b)(13), a certification report shall include the following public product-specific information: The energy efficiency ratio (EER in British thermal units per Watt-hour (Btu/W-h)), cooling capacity in British thermal units per hour (Btu/h), and the electrical power input in watts (W).

[76 FR 12451, Mar. 7, 2011; 76 FR 24763, May 2, 2011]

§429.16 Central air conditioners and heat pumps.

(a) *Sampling plan for selection of units for testing.* (1) The general requirements of §429.11 are applicable to central air conditioners and heat pumps; and

(2)(i) For central air conditioners and heat pumps, each single-package system and each condensing unit (outdoor unit) of a split-system, when combined with a selected evaporator coil (indoor unit) or a set of selected indoor units, must have a sample of sufficient size

tested in accordance with the applicable provisions of this subpart. The represented values for any model of a single-package system, any model of a tested split-system combination, any model of a tested mini-split system combination, or any model of a tested multi-split system combination must be assigned such that—

(A) Any represented value of annual operating cost, energy consumption or other measure of energy consumption of the central air conditioner or heat pump for which consumers would favor lower values shall be greater than or equal to the higher of:

(*1*) The mean of the sample, where:

$$\bar{x} = \frac{1}{n}\sum_{i=1}^{n} x_i$$

and, $\bar{x}$ is the sample mean; n is the number of samples; and x_i is the ith sample;

Or,

(*2*) The upper 90 percent confidence limit (UCL) of the true mean divided by 1.05, where:

$$UCL = \bar{x} + t_{.90}\left(\frac{s}{\sqrt{n}}\right)$$

And $\bar{x}$ is the sample mean; s is the sample standard deviation; n is the number of samples; and $t_{0.90}$ is the t statistic for a 90% one-tailed confidence interval with n-1 degrees of freedom (from Appendix A).

and

(B) Any represented value of the energy efficiency or other measure of energy consumption of the central air conditioner or heat pump for which consumers would favor higher values shall be less than or equal to the lower of:

(*1*) The mean of the sample, where:

$$\bar{x} = \frac{1}{n}\sum_{i=1}^{n} x_i$$

and, $\bar{x}$ is the sample mean; n is the number of samples; and x_i is the ith sample;

Or,

(*2*) The lower 90 percent confidence limit (LCL) of the true mean divided by 0.95, where:

$$LCL = \bar{x} - t_{.90}\left(\frac{s}{\sqrt{n}}\right)$$

And $\bar{x}$ is the sample mean; s is the sample standard deviation; n is the number of samples; and $t_{0.90}$ is the t statistic for a 90% one-tailed confidence interval with n-1 degrees of freedom (from Appendix A).

(C) For heat pumps, all units of the sample population must be tested in both the cooling and heating modes and the results used for determining the heat pump's certified Seasonal Energy Efficiency Ratio (SEER) and Heating Seasonal Performance Factor (HSPF) ratings in accordance with paragraph (a)(2)(i)(B) of this section.

(ii) For split-system air conditioners and heat pumps, the condenser-evaporator coil combination selected for tests pursuant to paragraph (a)(2)(i) of this section shall include the evaporator coil that is likely to have the largest volume of retail sales with the particular model of condensing unit. For mini-split condensing units that are designed to always be installed with more than one indoor unit, a ''tested combination'' as defined in 10 CFR 430.2 shall be used for tests pursuant to paragraph (a)(2)(i) of this section. For multi-split systems, each model of condensing unit shall be tested with two different sets of indoor units. For one set, a ''tested combination'' composed entirely of non-ducted indoor units shall be used. For the second set, a ''tested combination'' composed entirely of ducted indoor units shall be used. However, for any split-system air conditioner having a single-speed compressor, the condenser-evaporator coil combination selected for tests pursuant to paragraph (a)(2)(i) of this section shall include the indoor *coil-only* unit that is likely to have the largest volume of retail sales with the particular model of outdoor unit. This *coil-only* requirement does not apply to split-system air conditioners that are only sold and installed with *blower-coil* indoor units, specifically mini-splits, multi-splits, and through-the-wall units. This *coil-only* requirement does not apply to any split-system heat pumps. For every other split-system combination that includes the same model of condensing unit but a different model of evaporator coil and for every other mini-split and multi-split system that includes the same model of condensing unit but a different set of evaporator coils, whether the evaporator coil(s) is manufactured by the same manufacturer or by a component manufacturer, either—

(A) A sample of sufficient size, comprised of production units or representing production units, must be tested as complete systems with the resulting ratings for the outdoor unit-indoor unit(s) combination obtained in accordance with paragraphs (a)(2)(i)(A) and (a)(2)(i)(B) of this section; or

(B) The representative values of the measures of energy efficiency must be assigned as follows:

(*1*) Using an alternative rating method (ARM) that has been approved by DOE in accordance with the provisions of § 429.70(e)(1) and (2); or

(*2*) For multi-split systems composed entirely of non-ducted indoor units, set equal to the system tested in accordance with paragraph (a)(2)(i) of this section whose tested combination was entirely non-ducted indoor units; or

(*3*) For multi-split systems composed entirely of ducted indoor units, set equal to the system tested in accordance with paragraph (a)(2)(i) of this section when the tested combination was entirely ducted indoor units; or

(*4*) For multi-split systems having a mix of non-ducted and ducted indoor units, set equal to the mean of the values for the two systems—one having the tested combination of all non-ducted units and the second having the tested combination of all ducted indoor

units—tested in accordance with paragraph (a)(2)(i) of this section.

(iii) Whenever the representative values of the measures of energy consumption, as determined by the provisions of paragraph (a)(2)(ii)(B) of this section, do not agree within 5 percent of the energy consumption as determined by actual testing, the values determined by actual testing must be used to comply with section 323(c) of the Act or to comply with rules under section 324 of the Act.

(b) *Certification reports.* (1) The requirements of § 429.12 are applicable to central air conditioners and heat pumps; and

(2) Pursuant to § 429.12(b)(13), a certification report shall include the following public product-specific information:

(i) Residential central air conditioners: The seasonal energy efficiency ratio (SEER in British thermal units per Watt-hour (Btu/W-h)), the cooling capacity in British thermal units per hour (Btu/h), and the manufacturer and individual manufacturer's model numbers of the indoor and outdoor unit. For central air conditioners whose seasonal energy efficiency ratio is based on an installation that includes a particular model of ducted air mover (*e.g.*, furnace, air handler, blower kit), the manufacturer's model number of this ducted air mover must be included among the model numbers listed on the certification report.

(ii) Residential central air conditioning heat pumps: The seasonal energy efficiency ratio (SEER in British thermal units per Watt-hour (Btu/W-h)), the cooling capacity in British thermal units per hour (Btu/h), the heating seasonal performance factor (HSPF in British thermal units per Watt-hour (Btu/W-h)), and the manufacturer and individual model numbers of the indoor and outdoor unit. For central air conditioning heat pumps whose seasonal energy efficiency ratio and heating seasonal performance factor are based on an installation that includes a particular model of ducted air mover (*e.g.*, furnace, air handler, blower kit), the model number of this ducted air mover must be included among the model numbers listed on the certification report.

(iii) Small duct, high velocity air conditioners: The seasonal energy efficiency ratio (SEER in British thermal units per Watt-hour (Btu/W-h)) and the cooling capacity in British thermal units per hour (Btu/h).

(iv) Small duct, high velocity heat pumps: The seasonal energy efficiency ratio (SEER in British thermal units per Watt-hour (Btu/W-h)), the heating seasonal performance factor (HSPF in British thermal units per Watt-hour (Btu/W-h)), and the cooling capacity in British thermal units per hour (Btu/h).

(iv) Space constrained air conditioners: The seasonal energy efficiency ratio (SEER in British thermal units per Watt-hour (Btu/W-h)) and the cooling capacity in British thermal units per hour (Btu/h).

(v) Space constrained heat pumps: The seasonal energy efficiency ratio (SEER in British thermal units per Watt-hour (Btu/W-h)), the coefficient of performance, and the cooling capacity in British thermal units per hour (Btu/h).

(c) *Alternative methods for determining efficiency or energy use* for central air conditioners and heat pumps can be found in § 429.70 of this subpart.

[76 FR 12451, Mar. 7, 2011; 76 FR 24763, May 2, 2011]

§ 429.17 Residential water heaters.

(a) *Sampling plan for selection of units for testing.* (1) The requirements of § 429.11 are applicable to residential water heaters; and

(2) For each basic model of residential water heaters, a sample of sufficient size shall be randomly selected and tested to ensure that—

(i) Any represented value of estimated annual operating cost, energy consumption or other measure of energy consumption of a basic model for which consumers would favor lower values shall be greater than or equal to the higher of:

(A) The mean of the sample, where:

$$\bar{x} = \frac{1}{n}\sum_{i=1}^{n} x_i$$

and, $\bar{x}$ is the sample mean; n is the number of samples; and x_i is the ith sample;

Or,

(B) The upper 95 percent confidence limit (UCL) of the true mean divided by 1.10, where:

$$UCL = \bar{x} + t_{.95}\left(\frac{s}{\sqrt{n}}\right)$$

And $\bar{x}$ is the sample mean; s is the sample standard deviation; n is the number of samples; and $t_{0.95}$ is the t statistic for a 95% one-tailed confidence interval with n-1 degrees of freedom (from Appendix A).

and

(ii) Any represented value of the energy factor or other measure of energy consumption of a basic model for which consumers would favor higher values shall be less than or equal to the lower of:

(A) The mean of the sample, where:

$$\bar{x} = \frac{1}{n}\sum_{i=1}^{n} x_i$$

and, $\bar{x}$ is the sample mean; n is the number of samples; and x_i is the ith sample;

Or,

(B) The lower 95 percent confidence limit (LCL) of the true mean divided by 0.90, where:

$$LCL = \bar{x} - t_{.95}\left(\frac{s}{\sqrt{n}}\right)$$

And $\bar{x}$ is the sample mean; s is the sample standard deviation; n is the number of samples; and $t_{0.95}$ is the t statistic for a 95% one-tailed confidence interval with n-1 degrees of freedom (from Appendix A).

(b) *Certification reports.* (1) The requirements of §429.12 are applicable to residential water heaters; and

(2) Pursuant to §429.12(b)(13), a certification report shall include the following public product-specific information: The energy factor (EF), rated storage volume in gallons (gal), first hour rating (maximum gallons per minute), and recovery efficiency (percent).

[76 FR 12451, Mar. 7, 2011; 76 FR 24764, May 2, 2011]

§ 429.18 Residential furnaces.

(a) *Sampling plan for selection of units for testing.* (1) The requirements of § 429.11 are applicable to residential furnaces; and

(2) (i) For each basic model of furnaces, other than basic models of those sectional cast-iron boilers (which may be aggregated into groups having identical intermediate sections and combustion chambers) a sample of sufficient size shall be randomly selected and tested to ensure that—

(A) Any represented value of estimated annual operating cost, energy consumption or other measure of energy consumption of a basic model for which consumers would favor lower values shall be greater than or equal to the higher of:

(*1*) The mean of the sample, where:

$$\bar{x} = \frac{1}{n}\sum_{i=1}^{n} x_i$$

and, $\bar{x}$ is the sample mean; n is the number of samples; and x_i is the ith sample;

Or,

(*2*) The upper 97½ percent confidence limit (UCL) of the true mean divided by 1.05, where:

$$UCL = \bar{x} + t_{.975}\left(\frac{s}{\sqrt{n}}\right)$$

And $\bar{x}$ is the sample mean; s is the sample standard deviation; n is the number of samples; and $t_{0.975}$ is the t statistic for a 97.5% one-tailed confidence interval with n-1 degrees of freedom (from Appendix A).

and

(B) Any represented value of the annual fuel utilization efficiency or other measure of energy consumption of a basic model for which consumers would favor higher values shall be less than or equal to the lower of:

(*1*) The mean of the sample, where:

$$\bar{x} = \frac{1}{n}\sum_{i=1}^{n} x_i$$

and, $\bar{x}$ is the sample mean; n is the number of samples; and x_i is the ith sample;

Or,

(*2*) The lower 97½ percent confidence limit (LCL) of the true mean divided by 0.95, where:

$$LCL = \bar{x} - t_{.975}\left(\frac{s}{\sqrt{n}}\right)$$

And $\bar{x}$ is the sample mean; s is the sample standard deviation; n is the number of samples; and $t_{0.975}$ is the t statistic for a 97.5% one-tailed confidence interval with n-1 degrees of freedom (from Appendix A).

(ii) For the lowest capacity basic model of a group of basic models of those sectional cast-iron boilers having identical intermediate sections and combustion chambers, a sample of sufficient size shall be randomly selected and tested to ensure that—

(A) Any represented value of estimated annual operating cost, energy consumption or other measure of energy consumption of a basic model for which consumers would favor lower values shall be greater than or equal to the higher of:

(*1*) The mean of the sample, where:

$$\bar{x} = \frac{1}{n}\sum_{i=1}^{n} x_i$$

and, $\bar{x}$ is the sample mean; n is the number of samples; and x_i is the ith sample;

Or,

(*2*) The upper 97½ percent confidence limit (UCL) of the true mean divided by 1.05, where:

$$UCL = \bar{x} + t_{.975}\left(\frac{s}{\sqrt{n}}\right)$$

And $\bar{x}$ is the sample mean; s is the sample standard deviation; n is the number of samples; and $t_{0.975}$ is the t statistic for a 97.5% one-tailed confidence interval with n-1 degrees of freedom (from Appendix A).

and

(B) Any represented value of the fuel utilization efficiency or other measure of energy consumption of a basic model for which consumers would favor higher values shall be less than or equal to the lower of:

(*1*) The mean of the sample, where:

$$\bar{x} = \frac{1}{n}\sum_{i=1}^{n} x_i$$

and, $\bar{x}$ is the sample mean; n is the number of samples; and x_i is the ith sample;

Or,

(*2*) The lower 97½ percent confidence limit (LCL) of the true mean divided by 0.95, where:

$$LCL = \bar{x} - t_{.975}\left(\frac{s}{\sqrt{n}}\right)$$

And $\bar{x}$ is the sample mean; s is the sample standard deviation; n is the number of samples; and $t_{0.975}$ is the t statistic for a 97.5% one-tailed confidence interval with n-1 degrees of freedom (from Appendix A).

(iii) For the highest capacity basic model of a group of basic models of those sectional cast-iron boilers having identical intermediate sections and combustion chambers, a sample of sufficient size shall be randomly selected and tested to ensure that—

(A) Any represented value of estimated annual operating cost, energy consumption or other measure of energy consumption of a basic model for which consumers would favor lower values shall be greater than or equal to the higher of:

(*1*) The mean of the sample, where:

$$\bar{x} = \frac{1}{n}\sum_{i=1}^{n} x_i$$

and, $\bar{x}$ is the sample mean; n is the number of samples; and x_i is the ith sample;

Or,

(*2*) The upper 97½ percent confidence limit (UCL) of the true mean divided by 1.05, where:

$$UCL = \bar{x} + t_{.975}\left(\frac{s}{\sqrt{n}}\right)$$

And $\bar{x}$ is the sample mean; s is the sample standard deviation; n is the number of samples; and $t_{0.975}$ is the t statistic for a 97.5% one-tailed confidence interval with n-1 degrees of freedom (from Appendix A).

and

(B) Any represented value of the fuel utilization efficiency or other measure of energy consumption of a basic model for which consumers would favor higher values shall be less than or equal to the lower of:

(*1*) The mean of the sample, where:

$$\bar{x} = \frac{1}{n}\sum_{i=1}^{n} x_i$$

and, $\bar{x}$ is the sample mean; n is the number of samples; and x_i is the ith sample;

Or,

(*2*) The lower 97½ percent confidence limit (LCL) of the true mean divided by 0.95, where:

$$LCL = \bar{x} - t_{.975}\left(\frac{s}{\sqrt{n}}\right)$$

And $\bar{x}$ is the sample mean; s is the sample standard deviation; n is the number of samples; and $t_{0.975}$ is the t statistic for a 97.5% one-tailed confidence interval with n-1 degrees of freedom (from Appendix A).

(iv) For each basic model or capacity other than the highest or lowest of the group of basic models of sectional cast-iron boilers having identical intermediate sections and combustion chambers, represented values of measures of energy consumption shall be determined by either—

(A) A linear interpolation of data obtained for the smallest and largest capacity units of the family, or

(B) Testing a sample of sufficient size to ensure that:

(*1*) Any represented value of estimated annual operating cost, energy consumption or other measure of energy consumption of a basic model for which consumers would favor lower values shall be greater than or equal to the higher of:

(*i*) The mean of the sample, where:

$$\bar{x} = \frac{1}{n}\sum_{i=1}^{n} x_i$$

and, $\bar{x}$ is the sample mean; n is the number of samples; and x_i is the ith sample;

Or,

(*ii*) The upper 97½ percent confidence limit (UCL) of the true mean divided by 1.05, where:

$$UCL = \bar{x} + t_{.975}\left(\frac{s}{\sqrt{n}}\right)$$

And $\bar{x}$ is the sample mean; s is the sample standard deviation; n is the number of samples; and $t_{0.975}$ is the t statistic for a 97.5% one-tailed confidence interval with n-1 degrees of freedom (from Appendix A).

and

(*2*) Any represented value of the energy factor or other measure of energy consumption of a basic model for which consumers would favor higher values shall be less than or equal to the lower of:

(*i*) The mean of the sample, where:

$$\bar{x} = \frac{1}{n}\sum_{i=1}^{n} x_i$$

and, $\bar{x}$ is the sample mean; n is the number of samples; and x_i is the ith sample;

Or,

(*ii*) The lower 97½ percent confidence limit (LCL) of the true mean divided by 0.95, where:

$$LCL = \bar{x} - t_{.975}\left(\frac{s}{\sqrt{n}}\right)$$

And $\bar{x}$ is the sample mean; s is the sample standard deviation; n is the number of samples; and $t_{0.975}$ is the t statistic for a 97.5% one-tailed confidence interval with n-1 degrees of freedom (from Appendix A).

(v) Whenever measures of energy consumption determined by linear interpolation do not agree with measures of energy consumption determined by actual testing, the values determined by testing must be used for certification.

(vi) In calculating the measures of energy consumption for each unit tested, use the design heating requirement corresponding to the mean of the capacities of the units of the sample.

(b) *Certification reports.* (1) The requirements of §429.12 are applicable to residential furnaces; and

(2) Pursuant to §429.12(b)(13), a certification report shall include the following public product-specific information:

(i) Residential furnaces and boilers: The annual fuel utilization efficiency (AFUE) in percent (%) and the input capacity in British thermal units per hour (Btu/h).

(ii) For cast-iron sectional boilers: The type of ignition system for gas-fired steam and hot water boilers.

(3) Pursuant to §429.12(b)(13), a certification report shall include the following additional product-specific information: For cast-iron sectional boilers: a declaration of whether certification is based on linear interpolation or testing. For hot water boilers, a declaration that the manufacturer has incorporated the applicable design requirements.

[76 FR 12451, Mar. 7, 2011; 76 FR 24765, May 2, 2011, as amended at 76 FR 38292, June 30, 2011]

§429.19 Dishwashers.

(a) *Sampling plan for selection of units for testing.* (1) The requirements of §429.11 are applicable to dishwashers; and

(2) For each basic model of dishwashers, a sample of sufficient size shall be randomly selected and tested to ensure that—

(i) Any represented value of estimated annual operating cost, energy or water consumption or other measure of energy or water consumption of a basic model for which consumers would favor lower values shall be greater than or equal to the higher of:

(A) The mean of the sample, where:

$$\bar{x} = \frac{1}{n}\sum_{i=1}^{n} x_i$$

and, $\bar{x}$ is the sample mean; n is the number of samples; and x_i is the ith sample;

Or,

(B) The upper 97½ percent confidence limit (UCL) of the true mean divided by 1.05, where:

$$UCL = \bar{x} + t_{.975}\left(\frac{s}{\sqrt{n}}\right)$$

And $\bar{x}$ is the sample mean; s is the sample standard deviation; n is the number of samples; and $t_{0.975}$ is the t statistic for a 97.5% one-tailed confidence interval with n-1 degrees of freedom (from Appendix A).

and

(ii) Any represented value of the energy or water factor or other measure of energy or water consumption of a basic model for which consumers would favor higher values shall be less than or equal to the lower of:

(A) The mean of the sample, where:

$$\bar{x} = \frac{1}{n}\sum_{i=1}^{n} x_i$$

and, $\bar{x}$ is the sample mean; n is the number of samples; and x_i is the ith sample;

Or,

(B) The lower 97½ percent confidence limit (LCL) of the true mean divided by 0.95, where:

$$LCL = \bar{x} - t_{.975}\left(\frac{s}{\sqrt{n}}\right)$$

And $\bar{x}$ is the sample mean; s is the sample standard deviation; n is the number of samples; and $t_{0.975}$ is the t statistic for a 97.5% one-tailed confidence interval with n-1 degrees of freedom (from Appendix A).

(b) *Certification reports.* (1) The requirements of § 429.12 are applicable to dishwashers; and

(2) Pursuant to § 429.12(b)(13), a certification report shall include the following public product-specific information: The estimated annual energy use in kilowatt hours per year (kWh/yr) and the water consumption in gallons per cycle.

(3) Pursuant to § 429.12(b)(13), a certification report shall include the following additional product-specific information when using appendix C or appendix C1: the capacity in number of place settings as specified in ANSI/AHAM DW–1–1992 when using appendix C (incorporated by reference, see § 429.4) and ANSI/AHAM DW–1–2010 when using appendix C1 (incorporated by reference, see § 429.4), presence of a soil sensor (if yes, the number of cycles required to reach calibration), and the water inlet temperature used for testing in degrees Fahrenheit (°F). When using appendix C1, additionally: the cycle selected for energy testing and whether that cycle is soil-sensing, the options selected for the energy test, and presence of a built-in water softening system (if yes, the energy use in kilowatt-hours and the water use in gallons required for each regeneration of the water softening system, the number of regeneration cycles per year, and data and calculations used to derive these values).

[76 FR 12451, Mar. 7, 2011; 76 FR 24766, May 2, 2011, as amended at 77 FR 31962, May 30, 2012; 77 FR 65977, Oct. 31, 2012]

§ 429.20 Residential clothes washers.

(a) *Sampling plan for selection of units for testing.* (1) The requirements of § 429.11 are applicable to residential clothes washers; and

(2) For each basic model of residential clothes washers, a sample of sufficient size shall be randomly selected and tested to ensure that—

(i) Any represented value of the water factor, integrated water factor, the estimated annual operating cost, the energy or water consumption, or other measure of energy or water consumption of a basic model for which consumers would favor lower values shall be greater than or equal to the higher of:

(A) The mean of the sample, where:

$$\bar{x} = \frac{1}{n}\sum_{i=1}^{n} x_i$$

and, $\bar{x}$ is the sample mean; n is the number of samples; and x_i is the ith sample;

Or,

(B) The upper 97½ percent confidence limit (UCL) of the true mean divided by 1.05, where:

$$UCL = \bar{x} + t_{.975}\left(\frac{s}{\sqrt{n}}\right)$$

And $\bar{x}$ is the sample mean; s is the sample standard deviation; n is the number of samples; and $t_{0.975}$ is the t statistic for a 97.5% one-tailed confidence interval with n-1 degrees of freedom (from Appendix A).

and

(ii) Any represented value of the modified energy factor, integrated modified energy factor, or other measure of energy or water consumption of a basic model for which consumers would favor higher values shall be less than or equal to the lower of:

(A) The mean of the sample, where:

$$\bar{x} = \frac{1}{n}\sum_{i=1}^{n} x_i$$

and, $\bar{x}$ is the sample mean; n is the number of samples; and x_i is the ith sample;

Or,

(B) The lower 97½ percent confidence limit (LCL) of the true mean divided by 0.95, where:

$$LCL = \bar{x} - t_{.975}\left(\frac{s}{\sqrt{n}}\right)$$

And $\bar{x}$ is the sample mean; s is the sample standard deviation; n is the number of samples; and $t_{0.975}$ is the t statistic for a 97.5% one-tailed confidence interval with n-1 degrees of freedom (from Appendix A).

(b) *Certification reports.* (1) The requirements of § 429.12 are applicable to residential clothes washers; and

(2) Pursuant to § 429.12(b)(13), a certification report shall include the following public product-specific information:

(i) For residential clothes washers manufactured before March 7, 2015: The modified energy factor (MEF) in cubic feet per kilowatt hour per cycle (cu ft/kWh/cycle) and the capacity in cubic feet (cu ft). For standard-size residential clothes washers, a water factor (WF) in gallons per cycle per cubic feet (gal/cycle/cu ft).

(ii) For residential clothes washers manufactured on or after March 7, 2015: The integrated modified energy factor (IMEF) in cu ft/kWh/cycle, the integrated water factor (IWF) in gal/cycle/cu ft, the capacity in cu ft and the type of loading (top-loading or front-loading).

(3) Pursuant to § 429.12(b)(13), a certification report shall include the following additional product-specific information: When using appendix J2, a list of all cycle selections comprising the complete energy test cycle for each basic model.

[76 FR 12451, Mar. 7, 2011; 76 FR 24767, May 2, 2011, as amended at 77 FR 13936, Mar. 7, 2012; 77 FR 32379, May 31, 2012]

§ 429.21 Residential clothes dryers.

(a) *Sampling plan for selection of units for testing.* (1) The requirements of § 429.11 are applicable to clothes dryers; and

(2) For each basic model of clothes dryers a sample of sufficient size shall be randomly selected and tested to ensure that—

(i) Any represented value of estimated annual operating cost, energy consumption or other measure of energy consumption of a basic model for which consumers would favor lower values shall be greater than or equal to the higher of:

(A) The mean of the sample, where:

$$\bar{x} = \frac{1}{n}\sum_{i=1}^{n} x_i$$

and, $\bar{x}$ is the sample mean; n is the number of samples; and x_i is the ith sample;

Or,

(B) The upper 97½ percent confidence limit (UCL) of the true mean divided by 1.05, where:

$$UCL = \bar{x} + t_{.975}\left(\frac{s}{\sqrt{n}}\right)$$

And $\bar{x}$ is the sample mean; s is the sample standard deviation; n is the number of samples; and $t_{0.975}$ is the t statistic for a 97.5% one-tailed confidence interval with n-1 degrees of freedom (from Appendix A).

and

(ii) Any represented value of the energy factor, combined energy factor, or other measure of energy consumption of a basic model for which consumers would favor higher values shall be less than or equal to the lower of:

(A) The mean of the sample, where:

$$\bar{x} = \frac{1}{n}\sum_{i=1}^{n} x_i$$

and, $\bar{x}$ is the sample mean; n is the number of samples; and x_i is the ith sample;

Or,

(B) The lower 97½ percent confidence limit (LCL) of the true mean divided by 0.95, where:

$$LCL = \bar{x} - t_{.975}\left(\frac{s}{\sqrt{n}}\right)$$

And $\bar{x}$ is the sample mean; s is the sample standard deviation; n is the number of samples; and $t_{0.975}$ is the t statistic for a 97.5% one-tailed confidence interval with n-1 degrees of freedom (from Appendix A).

(3) The capacity of a basic model reported in accordance with paragraph (b)(2) of this section shall be the mean of the capacities measured for each tested unit of the basic model.

(b) *Certification reports.* (1) The requirements of § 429.12 are applicable to clothes dryers; and

(2) Pursuant to § 429.12(b)(13), a certification report shall include the following public product-specific information: When using appendix D, the energy factor in pounds per kilowatt hours (lb/kWh), the capacity in cubic feet (cu ft), the voltage in volts (V) (for electric dryers only), an indication if the dryer has automatic termination controls, and the hourly British thermal unit (Btu) rating of the burner (for gas dryers only); when using appendix D1, the combined energy factor in pounds per kilowatt hours (lb/kWh), the capacity in cubic feet (cu ft), the voltage in volts (V) (for electric dryers only), an indication if the dryer has automatic termination controls, and the hourly Btu rating of the burner (for gas dryers only); when using appendix D2, the combined energy factor in pounds per kilowatt hours (lb/kWh), the capacity in cubic feet (cu ft), the voltage in volts (V) (for electric dryers only), an indication if the dryer has automatic termination controls, the hourly Btu rating of the burner (for gas dryers only), and a list of the cycle setting selections for the energy test cycle as recorded in section 3.4.7 of appendix D2 to Subpart B of Part 430.

[76 FR 12451, Mar. 7, 2011; 76 FR 24767, May 2, 2011, as amended at 78 FR 49644, Aug. 14, 2013]

§ 429.22 Direct heating equipment.

(a) *Sampling plan for selection of units for testing.* (1) The requirements of § 429.11 are applicable to direct heating equipment; and

(2) (i) For each basic model of direct heating equipment (not including furnaces) a sample of sufficient size shall be randomly selected and tested to ensure that—

(A) Any represented value of estimated annual operating cost, energy consumption or other measure of energy consumption of a basic model for which consumers would favor lower values shall be greater than or equal to the higher of:

(*1*) The mean of the sample, where:

$$\bar{x} = \frac{1}{n}\sum_{i=1}^{n} x_i$$

and, $\bar{x}$ is the sample mean; n is the number of samples; and x_i is the ith sample;

Or,

(*2*) The upper 97½ percent confidence limit (UCL) of the true mean divided by 1.05, where:

$$UCL = \bar{x} + t_{.975}\left(\frac{s}{\sqrt{n}}\right)$$

And $\bar{x}$ is the sample mean; s is the sample standard deviation; n is the number of samples; and $t_{0.975}$ is the t statistic for a 97.5% one-tailed confidence interval with n-1 degrees of freedom (from Appendix A).

and

(B) Any represented value of the fuel utilization efficiency or other measure of energy consumption of a basic model for which consumers would favor higher values shall be less than or equal to the lower of:

(*1*) The mean of the sample, where:

$$\bar{x} = \frac{1}{n}\sum_{i=1}^{n} x_i$$

and, $\bar{x}$ is the sample mean; n is the number of samples; and x_i is the ith sample;

Or,

(*2*) The lower 97½ percent confidence limit (LCL) of the true mean divided by 0.95, where:

$$LCL = \bar{x} - t_{.975}\left(\frac{s}{\sqrt{n}}\right)$$

And $\bar{x}$ is the sample mean; s is the sample standard deviation; n is the number of samples; and $t_{0.975}$ is the t statistic for a 97.5% one-tailed confidence interval with n-1 degrees of freedom (from Appendix A).

(ii) In calculating the measures of energy consumption for each unit tested, use the design heating requirement corresponding to the mean of the capacities of the units of the sample.

(b) *Certification reports.* (1) The requirements of § 429.12 are applicable to direct heating equipment; and

(2) Pursuant to § 429.12(b)(13), a certification report shall include the following public product-specific information: Direct heating equipment, the annual fuel utilization efficiency (AFUE) in percent (%), the mean input capacity in British thermal units per hour (Btu/h), and the mean output capacity in British thermal units per hour (Btu/h).

[76 FR 12451, Mar. 7, 2011; 76 FR 24768, May 2, 2011, as amended at 76 FR 38292, June 30, 2011]

§ 429.23 Conventional cooking tops, conventional ovens, microwave ovens.

(a) *Sampling plan for selection of units for testing.* (1) The requirements of § 429.11 are applicable to conventional cooking tops, conventional ovens and microwave ovens; and

(2) For each basic model of conventional cooking tops, conventional ovens and microwave ovens a sample of sufficient size shall be randomly selected and tested to ensure that—

(i) Any represented value of estimated annual operating cost, energy consumption, standby mode power consumption, off mode power consumption, or other measure of energy consumption of a basic model for which consumers would favor lower values shall be greater than or equal to the higher of:

(A) The mean of the sample, where:

$$\bar{x} = \frac{1}{n}\sum_{i=1}^{n} x_i$$

and, $\bar{x}$ is the sample mean; n is the number of samples; and x_i is the ith sample;

Or,

(B) The upper 97½ percent confidence limit (UCL) of the true mean divided by 1.05, where:

$$UCL = \bar{x} + t_{,975}\left(\frac{s}{\sqrt{n}}\right)$$

And $\bar{x}$ is the sample mean; s is the sample standard deviation; n is the number of samples; and $t_{0.975}$ is the t statistic for a 97.5% one-tailed confidence interval with n-1 degrees of freedom (from Appendix A).

and

(ii) Any represented value of the energy factor, integrated energy factor, or other measure of energy consumption of a basic model for which consumers would favor higher values shall be less than or equal to the lower of:

(A) The mean of the sample, where:

$$\bar{x} = \frac{1}{n}\sum_{i=1}^{n} x_i$$

and, $\bar{x}$ is the sample mean; n is the number of samples; and x_i is the ith sample;

Or,

(B) The lower 97½ percent confidence limit (LCL) of the true mean divided by 0.95, where:

$$LCL = \bar{x} - t_{.975}\left(\frac{s}{\sqrt{n}}\right)$$

And $\bar{x}$ is the sample mean; s is the sample standard deviation; n is the number of samples; and $t_{0.975}$ is the t statistic for a 97.5% one-tailed confidence interval with n-1 degrees of freedom (from Appendix A).

(b) *Certification reports.* (1) The requirements of § 429.12 are applicable to conventional cooking tops, conventional ovens and microwave ovens; and

(2) Pursuant to § 429.12(b)(13), a certification report shall include the following public product-specific information: For conventional cooking tops and conventional ovens: the type of pilot light and a declaration that the manufacturer has incorporated the applicable design requirements. For microwave ovens, the average standby power in watts.

[76 FR 12451, Mar. 7, 2011; 76 FR 24769, May 2, 2011, as amended at 77 FR 65977, Oct. 31, 2012; 78 FR 4025, Jan. 18, 2013; 78 FR 36368, June 17, 2013]

§ 429.24 Pool heaters.

(a) *Sampling plan for selection of units for testing.* (1) The requirements of § 429.11 are applicable to pool heaters; and

(2) For each basic model of pool heater a sample of sufficient size shall be randomly selected and tested to ensure that any represented value of the thermal efficiency or other measure of energy consumption of a basic model for which consumers would favor higher values shall be less than or equal to the lower of:

$$\bar{x} = \frac{1}{n}\sum_{i=1}^{n} x_i$$

and, $\bar{x}$ is the sample mean; n is the number of samples; and x_i is the ith sample;

(i) The mean of the sample, where:
Or,

(ii) The lower 97½ percent confidence limit (LCL) of the true mean divided by 0.95, where:

$$LCL = \bar{x} - t_{.975}\left(\frac{s}{\sqrt{n}}\right)$$

And $\bar{x}$ is the sample mean; s is the sample standard deviation; n is the number of samples; and $t_{0.975}$ is the t statistic for a 97.5% one-tailed confidence interval with n-1 degrees of freedom (from Appendix A).

(b) *Certification reports.* (1) The requirements of § 429.12 are applicable to pool heaters; and

(2) Pursuant to § 429.12(b)(13), a certification report shall include the following public product-specific information: The thermal efficiency in percent (%) and the input capacity in British thermal units per hour (Btu/h).

[76 FR 12451, Mar. 7, 2011; 76 FR 24769, May 2, 2011]

§ 429.25 Television sets.

(a) *Sampling plan for selection of units for testing.* (1) The requirements of § 429.11 are applicable to televisions; and

(2) For each basic model of television, samples shall be randomly selected and tested to ensure that—

(i) Any represented value of power consumption of a basic model for which consumers would favor lower values shall be greater than or equal to the higher of:

(A) The mean of the sample, where:

$$\bar{x} = \frac{1}{n}\sum_{i=1}^{n} x_i$$

and $\bar{x}$ is the sample mean; n is the number of samples; and x_i is the ith sample;

Or,

(B) For on mode power consumption, the upper 95 percent confidence limit (UCL) of the true mean divided by 1.05, where:

$$UCL = \bar{x} + t_{0.95}\left(\frac{s}{\sqrt{n}}\right)$$

and $\bar{x}$ is the sample mean; s is the sample standard deviation; n is the number of samples; and $t_{0.95}$ is the t-statistic for a 95% one-tailed confidence interval with n−1 degrees of freedom (from Appendix A of this subpart).

And

(C) For standby mode power consumption and power consumption measurements in modes other than on mode, the upper 90 percent confidence limit (UCL) of the true mean divided by 1.10, where:

$$UCL = \bar{x} + t_{0.90}\left(\frac{s}{\sqrt{n}}\right)$$

and $\bar{x}$ is the sample mean; s is the sample standard deviation; n is the number of samples; and $t_{0.90}$ is the t-statistic for a 90% one-tailed confidence interval with n−1 degrees of freedom (from Appendix A of this subpart).

(ii) Any represented annual energy consumption of a basic model shall be determined by applying the AEC calculation in section 8.2 of Appendix H to subpart B of 10 CFR Part 430 to the represented values of power consumption as calculated pursuant to paragraph (a)(2)(i) of this section.

(iii) *Rounding requirements.* The represented value of power consumption and the represented annual energy consumption shall be rounded as follows:

(A) For power consumption in the on, standby, and off modes, the represented value shall be rounded according to the accuracy requirements specified in section 3.3.3 of Appendix H to subpart B of 10 CFR Part 430.

(B) For annual energy consumption, the represented value shall be rounded according to the rounding requirements specified in section 8.3 of Appendix H to subpart B of 10 CFR Part 430.

(b) [Reserved]

[78 FR 63840, Oct. 25, 2013]

§ 429.26 Fluorescent lamp ballasts.

(a) *Sampling plan for selection of units for testing.* (1) The requirements of § 429.11 are applicable to fluorescent lamp ballasts; and

(2) For each basic model of fluorescent lamp ballasts, a sample of sufficient size, not less than four, shall be randomly selected and tested to ensure that—

(i) Any represented value of estimated annual energy operating costs, energy consumption, or other measure of energy consumption of a basic model for which consumers would favor lower values shall be greater than or equal to the higher of:

(A) The mean of the sample, where:

$$\bar{x} = \frac{1}{n}\sum_{i=1}^{n} x_i$$

and, $\bar{x}$ is the sample mean; n is the number of samples; and x_i is the ith sample;

Or,

(B) The upper 99 percent confidence limit (UCL) of the true mean divided by 1.01, where:

$$UCL = \bar{x} + t_{.99}\left(\frac{s}{\sqrt{n}}\right)$$

And $\bar{x}$ is the sample mean; s is the sample standard deviation; n is the number of samples; and $t_{0.99}$ is the t statistic for a 99% one-tailed confidence interval with n-1 degrees of freedom (from Appendix A).

and

(ii) Any represented value of the ballast efficacy factor or other measure of the energy consumption of a basic model for which consumers would favor a higher value shall be less than or equal to the lower of:

(A) The mean of the sample, where:

$$\bar{x} = \frac{1}{n}\sum_{i=1}^{n} x_i$$

and, $\bar{x}$ is the sample mean; n is the number of samples; and x_i is the ith sample;

Or,

(B) The lower 99 percent confidence limit (LCL) of the true mean divided by 0.99, where:

$$LCL = \bar{x} - t_{.99}\left(\frac{s}{\sqrt{n}}\right)$$

And $\bar{x}$ is the sample mean; s is the sample standard deviation; n is the number of samples; and $t_{0.99}$ is the t statistic for a 99% one-tailed confidence interval with n-1 degrees of freedom (from Appendix A).

(b) *Certification reports.* (1) The requirements of § 429.12 are applicable to fluorescent lamp ballasts; and

(2) Pursuant to § 429.12(b)(13), a certification report shall include the following public product-specific information: The ballast efficacy factor, the ballast power factor, the number of

lamps operated by the ballast, and the type of lamps operated by the ballast.

[76 FR 12451, Mar. 7, 2011; 76 FR 24769, May 2, 2011]

§ 429.27 General service fluorescent lamps, general service incandescent lamps, and incandescent reflector lamps.

(a) *Sampling plan for selection of units for testing.* (1) The requirements of § 429.11 are applicable to general service fluorescent lamps, general service incandescent lamps and incandescent reflector lamps; and

(2)(i) For each basic model of general service fluorescent lamp and incandescent reflector lamp, samples of production lamps shall be obtained from a 12-month period, tested, and the results averaged. A minimum sample of 21 lamps shall be tested. The manufacturer shall randomly select a minimum of three lamps from each month of production for a minimum of 7 out of the 12-month period. In the instance where production occurs during fewer than 7 of such 12 months, the manufacturer shall randomly select 3 or more lamps from each month of production, where the number of lamps selected for each month shall be distributed as evenly as practicable among the months of production to attain a minimum sample of 21 lamps. Any represented value of lamp efficacy of a basic model shall be based on the sample and shall be less than or equal to the lower of:

(A) The mean of the sample, where:

$$\bar{x} = \frac{1}{n}\sum_{i=1}^{n} x_i$$

and, $\bar{x}$ is the sample mean; n is the number of samples; and x_i is the ith sample;

Or,

(B) The lower 95 percent confidence limit (LCL) of the true mean divided by .97, where:

$$LCL = \bar{x} - t_{.95}\left(\frac{s}{\sqrt{n}}\right)$$

And $\bar{x}$ is the sample mean; s is the sample standard deviation; n is the number of samples; and $t_{0.95}$ is the t statistic for a 95% one-tailed confidence interval with n-1 degrees of freedom (from Appendix A).

(ii) For each basic model of general service fluorescent lamp and general service incandescent lamp, the color rendering index (CRI) shall be measured from the same lamps selected for the lumen output and watts input measurements in paragraphs (a)(2)(i) and (a)(2)(iii) of this section, *i.e.*, the manufacturer shall measure all lamps for lumens, watts input, and CRI. The CRI shall be represented as the average of a minimum sample of 21 lamps and shall be less than or equal to the lower of:

(A) The mean of the sample, where:

$$\bar{x} = \frac{1}{n}\sum_{i=1}^{n} x_i$$

and, $\bar{x}$ is the sample mean; n is the number of samples; and x_i is the ith sample;

Or,

(B) The lower 95 percent confidence limit (LCL) of the true mean divided by .97, where:

$$LCL = \bar{x} - t_{.95}\left(\frac{s}{\sqrt{n}}\right)$$

And $\bar{x}$ is the sample mean; s is the sample standard deviation; n is the number of samples; and $t_{0.95}$ is the t statistic for a 95% one-tailed confidence interval with n-1 degrees of freedom (from Appendix A).

(iii) For each basic model of general service incandescent lamp, for measurements of rated wattage and rated lumen output, samples of production lamps shall be obtained from a 12-month period, tested, and the results averaged. A minimum sample of 21 lamps shall be tested. The manufacturer shall randomly select a minimum of three lamps from each month of production for a minimum of 7 out of the 12-month period. In the instance where production occurs during fewer than 7 of such 12 months, the manufacturer shall randomly select 3 or more lamps from each month of production, where the number of lamps selected for each month shall be distributed as evenly as practicable among the months of production to attain a minimum sample of 21 lamps. Any represented value of rated wattage of a basic model shall be based on the sample and shall be greater than or equal to the higher of:

(A) The mean of the sample, where:

$$\bar{x} = \frac{1}{n}\sum_{i=1}^{n} x_i$$

and, $\bar{x}$ is the sample mean; n is the number of samples; and x_i is the ith sample; Or,

(B) The upper 95 percent confidence limit (UCL) of the true mean divided by 1.03, where:

$$UCL = \bar{x} + t_{.95}\left(\frac{s}{\sqrt{n}}\right)$$

and $\bar{x}$ is the sample mean; s is the sample standard deviation; n is the number of samples; and $t_{0.95}$ is the t statistic for a 95% two-tailed confidence interval with n-1 degrees of freedom (from Appendix A to this subpart).

(iv) For each basic model of general service incandescent lamp, for measurements of rated lifetime, a minimum

sample of 21 lamps shall be tested. The manufacturer shall randomly select a minimum of three lamps from each month of production for a minimum of 7 out of the 12-month period. In the instance where production occurs during fewer than 7 of such 12 months, the manufacturer shall randomly select three or more lamps from each month of production, where the number of lamps selected for each month shall be distributed as evenly as practicable among the months of production to attain a minimum sample of 21 lamps. The lifetime shall be represented as the length of operating time between first use and failure of 50 percent of the sample size, in accordance with test procedures described in section 4.2 of Appendix R to subpart B of part 430 of this chapter. Compliance will be determined by the percentage of sample size that meets the minimum rated lifetime.

(b) *Certification reports.* (1) The requirements of § 429.12 are applicable to general service fluorescent lamps, general service incandescent lamps and incandescent reflector lamps; and

(2) Pursuant to § 429.12(b)(13), a certification report shall include the following public product-specific information:

(i) General service fluorescent lamps: the testing laboratory's National Voluntary Laboratory Accreditation Program (NVLAP) identification number or other NVLAP-approved accreditation identification, production dates of the units tested, the 12-month average lamp efficacy in lumens per watt (lm/W), lamp wattage (W), correlated color temperature in Kelvin (K), and the 12-month average Color Rendering Index (CRI).

(ii) Incandescent reflector lamps: The laboratory's NVLAP identification number or other NVLAP-approved accreditation identification, production dates of the units tested, the 12-month average lamp efficacy in lumens per watt (lm/W), and lamp wattage (W).

(iii) General service incandescent lamps: The testing laboratory's National Voluntary Laboratory Accreditation Program (NVLAP) identification number or other NVLAP-approved accreditation identification, production dates of the units tested, the 12-month average maximum rate wattage in watts (W), the 12-month average minimum rated lifetime (hours), and the 12-month average Color Rendering Index (CRI).

(c) *Test data.* Manufacturers must include the production date codes and the accompanying decoding scheme corresponding to all of the units tested for a given basic model in the detailed test records maintained under § 429.71.

[76 FR 12451, Mar. 7, 2011; 76 FR 24770, May 2, 2011, as amended at 76 FR 38292, June 30, 2011; 77 FR 4215, Jan. 27, 2012]

§ 429.28 Faucets.

(a) *Sampling plan for selection of units for testing.* (1) The requirements of § 429.11 are applicable to faucets; and

(2) For each basic model of faucet, a sample of sufficient size shall be randomly selected and tested to ensure that any represented value of water consumption of a basic model for which consumers favor lower values shall be no less than the higher of the higher of:

(i) The mean of the sample, where:

$$\bar{x} = \frac{1}{n}\sum_{i=1}^{n} x_i$$

and, $\bar{x}$ is the sample mean; n is the number of samples; and x_i is the ith sample;

Or,

(ii) The upper 95 percent confidence limit (UCL) of the true mean divided by 1.05, where:

$$UCL = \bar{x} + t_{.95}\left(\frac{s}{\sqrt{n}}\right)$$

And $\bar{x}$ is the sample mean; s is the sample standard deviation; n is the number of samples; and $t_{0.95}$ is the t statistic for a 95% one-tailed confidence interval with n-1 degrees of freedom (from Appendix A).

(b) *Certification reports.* (1) The requirements of § 429.12 are applicable to faucets; and

(2) Pursuant to § 429.12(b)(13), a certification report shall include the following public product-specific information: For non-metering faucets, the maximum water use in gallons per minute (gpm) rounded to the nearest 0.1 gallon; for metering faucets, the maximum water use in gallons per cycle (gal/cycle) rounded to the nearest 0.01 gallon; and for all faucet types, the flow water pressure in pounds per square inch (psi).

[76 FR 12451, Mar. 7, 2011; 76 FR 24771, May 2, 2011, as amended at 78 FR 62985, Oct. 23, 2013]

§ 429.29 Showerheads.

(a) *Sampling plan for selection of units for testing.* (1) The requirements of § 429.11 are applicable to showerheads; and

(2) For each basic model of a showerhead, a sample of sufficient size shall be randomly selected and tested to ensure that any represented value of water consumption of a basic model for which consumers favor lower values shall be greater than or equal to the higher of:

(i) The mean of the sample, where:

$$\bar{x} = \frac{1}{n}\sum_{i=1}^{n} x_i$$

and, $\bar{x}$ is the sample mean; n is the number of samples; and x_i is the ith sample;

Or,

(ii) The upper 95 percent confidence limit (UCL) of the true mean divided by 1.05, where:

$$UCL = \bar{x} + t_{.95}\left(\frac{s}{\sqrt{n}}\right)$$

And $\bar{x}$ is the sample mean; s is the sample standard deviation; n is the number of samples; and $t_{0.95}$ is the t statistic for a 95% one-tailed confidence interval with n-1 degrees of freedom (from Appendix A).

(b) *Certification reports.* (1) The requirements of § 429.12 are applicable to showerheads; and

(2) Pursuant to § 429.12(b)(13), a certification report shall include the following public product-specific information: The maximum water use in gallons per minute (gpm) rounded to the nearest 0.1 gallon, the maximum flow water pressure in pounds per square inch (psi), and a declaration that the showerhead meets the requirements of § 430.32(p) pertaining to mechanical retention of the flow-restricting insert, if applicable.

[76 FR 12451, Mar. 7, 2011; 76 FR 24771, May 2, 2011, as amended at 78 FR 62985, Oct. 23, 2013]

§ 429.30 Water closets.

(a) *Sampling plan for selection of units for testing.* (1) The requirements of § 429.11 are applicable to water closets; and

(2) For each basic model of water closet, a sample of sufficient size shall be randomly selected and tested to ensure that any represented value of water consumption of a basic model for which consumers favor lower values shall be greater than or equal to the higher of:

(i) The mean of the sample, where:

$$\bar{x} = \frac{1}{n}\sum_{i=1}^{n} x_i$$

and, $\bar{x}$ is the sample mean; n is the number of samples; and x_i is the ith sample;

Or,

(ii) The upper 90 percent confidence limit (UCL) of the true mean divided by 1.1, where:

$$UCL = \bar{x} + t_{.90}\left(\frac{s}{\sqrt{n}}\right)$$

And $\bar{x}$ is the sample mean; s is the sample standard deviation; n is the number of samples; and $t_{0.90}$ is the t statistic for a 90% one-tailed confidence interval with n-1 degrees of freedom (from Appendix A).

(b) *Certification reports.* (1) The requirements of § 429.12 are applicable to water closets; and

(2) Pursuant to § 429.12(b)(13), a certification report shall include the following public product-specific information: The maximum water use in gallons per flush (gpf), rounded to the nearest 0.01 gallon. For dual-flush water closets, the maximum water use to be reported is the flush volume observed when tested in the full-flush mode.

[76 FR 12451, Mar. 7, 2011; 76 FR 24771, May 2, 2011, as amended at 78 FR 62986, Oct. 23, 2013]

§ 429.31 Urinals.

(a) *Sampling plan for selection of units for testing.* (1) The requirements of § 429.11 are applicable to urinals; and

(2) For each basic model of urinal, a sample of sufficient size shall be randomly selected and tested to ensure that any represented value of water consumption of a basic model for which consumers favor lower values shall be greater than or equal to the higher of:

(i) The mean of the sample, where:

$$\bar{x} = \frac{1}{n}\sum_{i=1}^{n} x_i$$

and, $\bar{x}$ is the sample mean; n is the number of samples; and x_i is the ith sample;

Or,

(ii) The upper 90 percent confidence limit (UCL) of the true mean divided by 1.1, where:

$$UCL = \bar{x} + t_{.90}\left(\frac{s}{\sqrt{n}}\right)$$

And $\bar{x}$ is the sample mean; s is the sample standard deviation; n is the number of samples; and $t_{0.90}$ is the t statistic for a 90% one-tailed confidence interval with n-1 degrees of freedom (from Appendix A).

(b) *Certification reports.* (1) The requirements of § 429.12 are applicable to urinals; and

(2) Pursuant to § 429.12(b)(13), a certification report shall include the following public product-specific information: The maximum water use in gallons per flush (gpf), rounded to the nearest 0.01 gallon, and for trough-type urinals, the maximum flow rate in gallons per minute (gpm), rounded to the nearest 0.01 gallon, and the length of the trough in inches (in).

[76 FR 12451, Mar. 7, 2011; 76 FR 24771, May 2, 2011, as amended at 78 FR 62986, Oct. 23, 2013]

§ 429.32 Ceiling fans.

(a) *Sampling plan for selection of units for testing.* The requirements of § 429.11 are applicable to ceiling fans.

(b) *Certification reports.* (1) The requirements of § 429.12 are applicable to ceiling fans; and

(2) Pursuant to § 429.12(b)(13), a certification report shall include the following public product-specific information: The number of speeds within the ceiling fan controls and a declaration that the manufacturer has incorporated the applicable design requirements.

§ 429.33 Ceiling fan light kits.

(a) *Sampling plan for selection of units for testing.* (1) The requirements of § 429.11 are applicable to ceiling fan light kits; and

(2) For each basic model of ceiling fan light kit with sockets for medium screw base lamps or pin-based fluorescent lamps selected for testing, a sample of sufficient size shall be randomly selected and tested to ensure that—

(i) Any value of estimated energy consumption or other measure of energy consumption of a basic model for which consumers would favor lower values shall be greater than or equal to the higher of:

(A) The mean of the sample, where:

$$\bar{x} = \frac{1}{n}\sum_{i=1}^{n} x_i$$

and, $\bar{x}$ is the sample mean; n is the number of samples; and x_i is the ith sample;

Or,

(B) The upper 95 percent confidence limit (UCL) of the true mean divided by 1.1, where:

$$UCL = \bar{x} + t_{,95}\left(\frac{s}{\sqrt{n}}\right)$$

And $\bar{x}$ is the sample mean; s is the sample standard deviation; n is the number of samples; and $t_{0.95}$ is the t statistic for a 95% one-tailed confidence interval with n-1 degrees of freedom (from Appendix A).

and

(ii) Any represented value of the efficacy or other measure of energy consumption of a basic model for which consumers would favor higher values shall be less than or equal to the lower of:

(A) The mean of the sample, where:

$$\bar{x} = \frac{1}{n}\sum_{i=1}^{n} x_i$$

and, $\bar{x}$ is the sample mean; n is the number of samples; and x_i is the ith sample;

Or,

(B) The lower 95 percent confidence limit (LCL) of the true mean divided by 0.9, where:

$$LCL = \bar{x} - t_{,95}\left(\frac{s}{\sqrt{n}}\right)$$

And $\bar{x}$ is the sample mean; s is the sample standard deviation; n is the number of samples; and $t_{0.95}$ is the t statistic for a 95% one-tailed confidence interval with n-1 degrees of freedom (from Appendix A).

(b) *Certification reports.* (1) The requirements of § 429.12 are applicable to ceiling fan light kits; and

(2) Pursuant to § 429.12(b)(13), a certification report shall include the following public product-specific information:

(i) Ceiling fan light kits with sockets for medium screw base lamps: the rated wattage in watts (W) and the system's efficacy in lumens per watt (lm/W).

(ii) Ceiling fan light kits with pin-based sockets for fluorescent lamps: the rated wattage in watts (W), the system's efficacy in lumens per watt (lm/W), and the length of the lamp in inches (in).

(iii) Ceiling fan light kits with any other socket type: the rated wattage in watts (W) and the number of individual sockets.

(3) Pursuant to § 429.12(b)(13), a certification report shall include the following additional product-specific information: Ceiling fan light kits with any other socket type: a declaration that the basic model meets the applicable design requirement and the features that have been incorporated into

the ceiling fan light kit to meet the applicable design requirement (*e.g.*, circuit breaker, fuse, ballast).

[76 FR 12451, Mar. 7, 2011; 76 FR 24772, May 2, 2011]

§ 429.34 Torchieres.

(a) *Sampling plan for selection of units for testing.* (1) The requirements of § 429.11 are applicable to torchieres; and

(2) Reserved

(b) *Certification reports.* (1) The requirements of § 429.12 are applicable to torchieres; and

(2) Pursuant to § 429.12(b)(13), a certification report shall include the following additional product-specific information: A declaration that the basic model meets the applicable design requirement and the features that have been incorporated into the torchiere to meet the applicable design requirement (*e.g.*, circuit breaker, fuse, ballast).

§ 429.35 Bare or covered (no reflector) medium base compact fluorescent lamps.

(a) *Sampling plan for selection of units for testing.* (1) The requirements of § 429.11 are applicable to bare or covered (no reflector) medium base compact fluorescent lamps; and

(2) For each basic model of bare or covered (no reflector) medium base compact fluorescent lamp

(i) No less than five units per basic model must be used when testing for the efficacy, 1,000-hour lumen maintenance, and the lumen maintenance. Each unit must be tested in the base-up position unless the product is labeled restricted by the manufacturer, in which case the unit should be tested in the manufacturer specified position. Any represented value of efficacy, 1,000-hour lumen maintenance, and lumen maintenance shall be based on a sample randomly selected and tested to ensure that the represented value is less than or equal to the lower of:

(A) The mean of the sample, where:

$$\bar{x} = \frac{1}{n}\sum_{i=1}^{n} x_i$$

and, $\bar{x}$ is the sample mean; n is the number of samples; and x_i is the ith sample;

Or,

(B) The lower 97.5 percent confidence limit (LCL) of the true mean divided by 0.95, where:

$$LCL = \bar{x} - t_{.975}\left(\frac{s}{\sqrt{n}}\right)$$

And $\bar{x}$ is the sample mean; s is the sample standard deviation; n is the number of samples; and $t_{0.975}$ is the t statistic for a 97.5% one-tailed confidence interval with n-1 degrees of freedom (from Appendix A).

(ii) No less than 6 unique units (*i.e.*, units that have not previously been tested) per basic model must be used when testing for the rapid cycle stress. Each unit can be tested in the base up or base down position as stated by the manufacturer.

(iii) No less than 10 units per basic model must be used when testing for the average rated lamp life. Half the sample should be tested in the base up

position and half of the sample should be tested in the base down position, unless specific use or position appears on the packaging of that particular unit.

(b) *Certification reports.* (1) The requirements of § 429.12 are applicable to bare or covered medium base compact fluorescent lamps; and

(2) Pursuant to § 429.12(b)(13), a certification report shall include the following public product-specific information: The testing laboratory's NVLAP identification number or other NVLAP-approved accreditation identification, the minimum initial efficacy in lumens per watt (lm/W), the lumen maintenance at 1,000 hours in percent (%), the lumen maintenance at 40 percent of rated life in percent (%), the rapid cycle stress test in number of units passed, and the lamp life in hours (h).

[76 FR 12451, Mar. 7, 2011; 76 FR 24772, May 2, 2011, as amended at 76 FR 38292, June 30, 2011]

§ 429.36 Dehumidifiers.

(a) *Sampling plan for selection of units for testing.* (1) The requirements of § 429.11 are applicable to dehumidifiers; and

(2) For each basic model of dehumidifier selected for testing, a sample of sufficient size shall be randomly selected and tested to ensure that—

(i) Any represented value of energy consumption or other measure of energy consumption of a basic model for which consumers would favor lower values shall be greater than or equal to the higher of:

(A) The mean of the sample, where:

$$\bar{x} = \frac{1}{n}\sum_{i=1}^{n} x_i$$

and, $\bar{x}$ is the sample mean; n is the number of samples; and x_i is the ith sample;

Or,

(B) The upper 95 percent confidence limit (UCL) of the true mean divided by 1.10, where:

$$UCL = \bar{x} + t_{.95}\left(\frac{s}{\sqrt{n}}\right)$$

And $\bar{x}$ is the sample mean; s is the sample standard deviation; n is the number of samples; and $t_{0.95}$ is the t statistic for a 95% one-tailed confidence interval with n-1 degrees of freedom (from Appendix A).

and

(ii) Any represented value of the energy factor, integrated energy factor, or other measure of energy consumption of a basic model for which consumers would favor higher values shall be less than or equal to the lower of:

(A) The mean of the sample, where:

$$\bar{x} = \frac{1}{n}\sum_{i=1}^{n} x_i$$

and, $\bar{x}$ is the sample mean; n is the number of samples; and x_i is the ith sample;

Or,

(B) The lower 95 percent confidence limit (LCL) of the true mean divided by 0.90, where:

$$LCL = \bar{x} - t_{.95}\left(\frac{s}{\sqrt{n}}\right)$$

And $\bar{x}$ is the sample mean; s is the sample standard deviation; n is the number of samples; and $t_{0.95}$ is the t statistic for a 95% one-tailed confidence interval with n-1 degrees of freedom (from Appendix A).

(b) *Certification reports.* (1) The requirements of § 429.12 are applicable to dehumidifiers; and

(2) Pursuant to § 429.12(b)(13), a certification report shall include the following public product-specific information: The energy factor in liters per kilowatt hour (liters/kWh) and capacity in pints per day.

[76 FR 12451, Mar. 7, 2011; 76 FR 24773, May 2, 2011, as amended at 77 FR 65977, Oct. 31, 2012]

§ 429.37 Class A external power supplies.

(a) *Sampling plan for selection of units for testing.* (1) The requirements of § 429.11 are applicable to external power supplies; and

(2) For each basic model of external power supply selected for testing, a sample of sufficient size shall be randomly selected and tested to ensure that—

(i) Any represented value of the estimated energy consumption of a basic model for which consumers would favor lower values shall be greater than or equal to the higher of:

(A) The mean of the sample, where:

$$\bar{x} = \frac{1}{n}\sum_{i=1}^{n} x_i$$

and, $\bar{x}$ is the sample mean; n is the number of samples; and x_i is the ith sample;

Or,

(B) The upper 97.5 percent confidence limit (UCL) of the true mean divided by 1.05, where:

$$UCL = \bar{x} + t_{.975}\left(\frac{s}{\sqrt{n}}\right)$$

And $\bar{x}$ is the sample mean; s is the sample standard deviation; n is the number of samples; and $t_{0.975}$ is the t statistic for a 97.5% one-tailed confidence interval with n-1 degrees of freedom (from Appendix A).

and

(ii) Any represented value of the estimated energy consumption of a basic model for which consumers would favor higher values shall be less than or equal to the lower of:

(A) The mean of the sample, where:

$$\bar{x} = \frac{1}{n}\sum_{i=1}^{n} x_i$$

and, $\bar{x}$ is the sample mean; n is the number of samples; and x_i is the ith sample;

Or,

(B) The lower 97.5 percent confidence limit (LCL) of the true mean divided by 0.95, where:

$$LCL = \bar{x} - t_{.975}\left(\frac{s}{\sqrt{n}}\right)$$

And $\bar{x}$ is the sample mean; s is the sample standard deviation; n is the number of samples; and $t_{0.975}$ is the t statistic for a 97.5% one-tailed confidence interval with n-1 degrees of freedom (from Appendix A).

(b) *Certification reports.* (1) The requirements of § 429.12 are applicable to external power supplies except that required information may be reported on the basis of a basic model or a design family. If certifying using a design family, for § 429.12(b)(6), report the individual manufacturer's model numbers covered by the design family.

(2) Pursuant to § 429.12(b)(13), a certification report shall include the following public product-specific information:

(i) External power supplies: The average active mode efficiency as a percent (%), no-load mode power consumption in watts (W), nameplate output power in watts (W), and, if missing from the nameplate, the output current in amperes (A) of the basic model or the output current in amperes (A) of the highest- and lowest-voltage models within the external power supply design family.

(ii) Switch-selectable single-voltage external power supplies: The average active mode efficiency as a percent (%), no-load mode power consumption in watts (W) at the lowest and highest selectable output voltage, nameplate

output power in watts (W), and, if missing from the nameplate, the output current in amperes (A).

(iii) External power supplies that are exempt from no-load mode requirements under § 430.32(w)(1)(iii): A statement that the product is designed to be connected to a security or life safety alarm or surveillance system component, the average active mode efficiency as a percent (%), the nameplate output power in watts (W), and if missing from the nameplate, the certification report must also include the output current in amperes (A) of the basic model or the output current in amperes (A) of the highest- and lowest-voltage models within the external power supply design family.

[76 FR 12451, Mar. 7, 2011; 76 FR 24773, May 2, 2011, as amended at 76 FR 57899, Sept. 19, 2011]

§ 429.38 Non-class A external power supplies. [Reserved]

§ 429.39 Battery chargers.

(a) *Sampling plan for selection of units for testing.* (1) The requirements of § 429.11 are applicable to battery chargers; and

(2) For each basic model of battery charger selected for testing, a sample of sufficient size shall be randomly selected and tested to ensure that—

(i) Any represented value of the estimated non-active energy ratio or other measure of energy consumption of a basic model for which consumers would favor lower values shall be greater than or equal to the higher of:

(A) The mean of the sample, where:

$$\bar{x} = \frac{1}{n}\sum_{i=1}^{n} x_i$$

and, $\bar{x}$ is the sample mean; n is the number of samples; and x_i is the ith sample;

Or,

(B) The upper 97.5 percent confidence limit (UCL) of the true mean divided by 1.05, where:

$$UCL = \bar{x} + t_{.975}\left(\frac{s}{\sqrt{n}}\right)$$

And $\bar{x}$ is the sample mean; s is the sample standard deviation; n is the number of samples; and $t_{0.975}$ is the t statistic for a 97.5% one-tailed confidence interval with n-1 degrees of freedom (from Appendix A).

and

(ii) Any represented value of the estimated non-active energy ratio or other measure of energy consumption of a basic model for which consumers would favor higher values shall be less than or equal to the lower of:

(A) The mean of the sample, where:

$$\bar{x} = \frac{1}{n}\sum_{i=1}^{n} x_i$$

and, $\bar{x}$ is the sample mean; n is the number of samples; and x_i is the ith sample;

Or,

(B) The lower 97.5 percent confidence limit (LCL) of the true mean divided by 0.95, where:

$$LCL = \bar{x} - t_{.975}\left(\frac{s}{\sqrt{n}}\right)$$

And $\bar{x}$ is the sample mean; s is the sample standard deviation; n is the number of samples; and $t_{0.975}$ is the t statistic for a 97.5% one-tailed confidence interval with n-1 degrees of freedom (from Appendix A of this part).

(b) *Certification reports.* [Reserved]

[76 FR 12451, Mar. 7, 2011; 76 FR 24774, May 2, 2011]

§ 429.40 Candelabra base incandescent lamps and intermediate base incandescent lamps.

(a) *Sampling plan for selection of units for testing.* (1) The requirements of § 429.11 are applicable to candelabra base incandescent lamps; and

(2) For each basic model of candelabra base incandescent lamp and intermediate base incandescent lamp, a minimum sample of 21 lamps shall be randomly selected and tested. Any represented value of lamp wattage of a basic model shall be based on the sample and shall be less than or equal to the lower of:

(i) The mean of the sample, where:

$$\bar{x} = \frac{1}{n}\sum_{i=1}^{n} x_i$$

and, $\bar{x}$ is the sample mean; n is the number of samples; and x_i is the ith sample;

Or,

(ii) The lower 97.5 percent confidence limit (LCL) of the true mean divided by 0.95, where:

$$LCL = \bar{x} - t_{.975}\left(\frac{s}{\sqrt{n}}\right)$$

And $\bar{x}$ is the sample mean; s is the sample standard deviation; n is the number of samples; and $t_{0.975}$ is the t statistic for a 97.5% one-tailed confidence interval with n-1 degrees of freedom (from Appendix A of this part).

(b) *Certification reports.* (1) The requirements of § 429.12 are applicable to candelabra base and intermediate base incandescent lamps; and

(2) Pursuant to § 429.12(b)(13), a certification report shall include the following public product-specific information:

(i) Candelabra base incandescent lamp: The rated wattage in watts (W).

(ii) Intermediate base incandescent lamp: The rated wattage in watts (W).

[76 FR 12451, Mar. 7, 2011; 76 FR 24774, May 2, 2011]

§ 429.41 Electric motors. [Reserved]

§ 429.42 Commercial refrigerators, freezers, and refrigerator-freezers.

(a) *Sampling plan for selection of units for testing.* (1) The requirements of § 429.11 are applicable to commercial refrigerators, freezers, and refrigerator-freezers; and

(2) For each basic model of commercial refrigerator, freezer, or refrigerator-freezer selected for testing, a sample of sufficient size shall be randomly selected and tested to ensure that—

(i) Any value of estimated maximum daily energy consumption or other measure of energy consumption of a basic model for which consumers would favor lower values shall be greater than or equal to the higher of:

(A) The mean of the sample, where:

$$\bar{x} = \frac{1}{n}\sum_{i=1}^{n} x_i$$

and, $\bar{x}$ is the sample mean; n is the number of samples; and x_i is the maximum of the ith sample;

Or,

(B) The upper 95 percent confidence limit (UCL) of the true mean divided by 1.10, where:

$$UCL = \bar{x} + t_{.95}\left(\frac{s}{\sqrt{n}}\right)$$

And $\bar{x}$ is the sample mean; s is the sample standard deviation; n is the number of samples; and $t_{0.95}$ is the t statistic for a 95% one-tailed confidence interval with n-1 degrees of freedom (from Appendix A).

and

(ii) Any represented value of the energy efficiency or other measure of energy consumption of a basic model for which consumers would favor higher values shall be less than or equal to the lower of:

(A) The mean of the sample, where:

$$\bar{x} = \frac{1}{n}\sum_{i=1}^{n} x_i$$

and, $\bar{x}$ is the sample mean; n is the number of samples; and x_i is the ith sample;

Or,

(B) The lower 95 percent confidence limit (LCL) of the true mean divided by 0.90, where:

$$LCL = \bar{x} - t_{.95}\left(\frac{s}{\sqrt{n}}\right)$$

And $\bar{x}$ is the sample mean; s is the sample standard deviation; n is the number of samples; and $t_{0.95}$ is the t statistic for a 95% one-tailed confidence interval with n-1 degrees of freedom (from Appendix A).

(b) *Certification reports.* (1) The requirements of § 429.12 are applicable to commercial refrigerators, freezers, and refrigerator-freezers; and

(2) Pursuant to § 429.12(b)(13), a certification report shall include the following public product-specific information:

(i) Self-contained commercial refrigerators with solid doors, commercial refrigerators with transparent doors, commercial freezers with solid doors, and commercial freezers with transparent doors: the maximum daily energy consumption in kilowatt hours per day (kWh/day) and the chilled or frozen compartment volume in cubic feet (ft^3).

(ii) Self-contained commercial refrigerator-freezers with solids doors: the maximum average daily energy consumption in kilowatt hours per day (kWh/day) and the adjusted volume in cubic feet (ft^3).

(iii) Remote condensing commercial refrigerators, freezers, and refrigerator-freezers, self-contained commercial refrigerators, freezers, and refrigerator-freezers without doors, commercial ice-cream freezers, and commercial refrigeration equipment with two or more compartments (i.e., hybrid refrigerators, hybrid freezers, hybrid refrigerator-freezers, and non-hybrid refrigerator-freezers): The maximum daily energy consumption in kilowatt hours per day (kWh/day), the total display area (TDA) in feet squared (ft^2) or the chilled volume in cubic feet (ft^3) as necessary to demonstrate compliance with the standards set forth in § 431.66, the rating temperature in degrees Fahrenheit (°F), the operating temperature range in degrees Fahrenheit (*e.g.*, ≥32 °F, <32 °F, and ≤−5 °F), the equipment family designation as described in § 431.66, and the condensing unit configuration.

[76 FR 12451, Mar. 7, 2011; 76 FR 24775, May 2, 2011, as amended at 76 FR 38292, June 30, 2011]

EFFECTIVE DATE NOTE: At 78 FR 79593, Dec. 31, 2013, § 429.42 was amended by revising paragraph (a), effective Jan. 30, 2014. For the convenience of the user, the revised text is set forth as follows:

§ 429.42 Commercial refrigerators, freezers, and refrigerator-freezers.

(a) *Determination of represented value.* Manufacturers can determine the represented value, which includes the certified rating, for each basic model of commercial refrigerator, freezer, or refrigerator-freezer either by testing, in conjunction with the applicable sampling provisions, or by applying an AEDM.

(1) *Units to be tested.* (i) If the represented value for a given basic model is determined through testing, the general requirements of § 429.11 are applicable; and

(ii) For each basic model selected for testing, a sample of sufficient size shall be randomly selected and tested to ensure that—

(A) Any represented value of energy consumption or other measure of energy use of a basic model for which consumers would favor lower values shall be greater than or equal to the higher of:

(*1*) The mean of the sample, where:

$$\bar{x} = \frac{1}{n}\sum_{i=1}^{n} x_i$$

And $\bar{x}$ is the sample mean; n is the number of samples; and x_i is the ith sample; or,

(*2*) The upper 95 percent confidence limit (UCL) of the true mean divided by 1.10, where:

$$UCL = \bar{x} + t_{0.95}\left(\frac{s}{\sqrt{n}}\right)$$

And $\bar{x}$ is the sample mean; s is the sample standard deviation; n is the number of samples; and $t_{0.95}$ is the t statistic for a 95% one-tailed confidence interval with n-1 degrees of freedom (from Appendix A to subpart B of part 429); And,

(B) Any represented value of the energy efficiency or other measure of energy consumption of a basic model for which consumers would favor higher values shall be less than or equal to the lower of:

(*1*) The mean of the sample, where:

$$\bar{x} = \frac{1}{n}\sum_{i=1}^{n} x_i$$

And, $\bar{x}$ is the sample mean; n is the number of samples; and x_i is the ith sample; or,

(*2*) The lower 95 percent confidence limit (LCL) of the true mean divided by 0.90, where:

$$LCL = \bar{x} - t_{0.95}\left(\frac{s}{\sqrt{n}}\right)$$

And $\bar{x}$ is the sample mean; s is the sample standard deviation; n is the number of samples; and $t_{0.95}$ is the t statistic for a 95% one-tailed confidence interval with n-1 degrees of freedom (from Appendix A to subpart B of part 429).

(2) *Alternative efficiency determination methods.* In lieu of testing, a represented value of efficiency or consumption for a basic model of commercial refrigerator, freezer or refrigerator-freezer must be determined through the application of an AEDM pursuant to the requirements of § 429.70 and the provisions of this section, where:

(i) Any represented value of energy consumption or other measure of energy use of a basic model for which consumers would favor lower values shall be greater than or equal to the output of the AEDM and less than or equal to the Federal standard for that basic model; and

(ii) Any represented value of energy efficiency or other measure of energy consumption of a basic model for which consumers would favor higher values shall be less than or equal to the output of the AEDM and

greater than or equal to the Federal standard for that basic model.

* * * * *

§ 429.43 Commercial heating, ventilating, air conditioning (HVAC) equipment.

(a) *Sampling plan for selection of units for testing.* (1) The requirements of § 429.11 are applicable to commercial HVAC equipment; and

(2) For each basic model of commercial heating, ventilating, air conditioning (HVAC) equipment, efficiency must be determined either by testing, in accordance with applicable test procedures in §§ 431.76, 431.86, 431.96, or 431.106 and the provisions of this section, or by application of an alternative efficiency determination method (AEDM) that meets the requirements of § 429.48 and the provisions of this section. For each basic model of commercial HVAC equipment, a sample of sufficient size shall be selected and tested to ensure that—

(i) Any represented value of energy consumption or other measure of energy usage of a basic model for which consumers would favor lower values shall be greater than or equal to the higher of:

(A) The mean of the sample, where:

$$\bar{x} = \frac{1}{n}\sum_{i=1}^{n} x_i$$

and, $\bar{x}$ is the sample mean; n is the number of samples; and x_i is the ith sample;

Or,

(B) The upper 95 percent confidence limit (UCL) of the true mean divided by 1.05, where:

$$UCL = \bar{x} + t_{.95}\left(\frac{s}{\sqrt{n}}\right)$$

And $\bar{x}$ is the sample mean; s is the sample standard deviation; n is the number of samples; and $t_{0.95}$ is the t statistic for a 95% one-tailed confidence interval with n-1 degrees of freedom (from Appendix A).

and

(ii) Any represented value of energy efficiency or other measure of energy consumption of a basic model for which consumers would favor higher values shall be less than or equal to the lower of:

(A) The mean of the sample, where:

$$\bar{x} = \frac{1}{n}\sum_{i=1}^{n} x_i$$

and, $\bar{x}$ is the sample mean; n is the number of samples; and x_i is the ith sample;

Or,

(B) The lower 95 percent confidence limit (LCL) of the true mean divided by 0.95, where:

$$LCL = \bar{x} - t_{.95}\left(\frac{s}{\sqrt{n}}\right)$$

And $\bar{x}$ is the sample mean; s is the sample standard deviation; n is the number of samples; and $t_{0.95}$ is the t statistic for a 95% one-tailed confidence interval with n-1 degrees of freedom (from Appendix A).

(b) *Certification reports.* (1) The requirements of § 429.12 are applicable to commercial HVAC equipment; and

(2) Pursuant to § 429.12(b)(13), a certification report shall include the following public product-specific information:

(i) Commercial warm air furnaces: The thermal efficiency in percent (%) and the maximum rated input capacity in British thermal units per hour (Btu/h).

(ii) Commercial packaged boilers: The combustion efficiency in percent (%) and the maximum rated input capacity in British thermal unit per hour (Btu/h) for equipment manufactured before March 2, 2012. For equipment manufactured on or after March 2, 2012, either the combustion efficiency in percent (%), or the thermal efficiency in percent (%) as required in § 431.87 and the maximum rated input capacity in British thermal units per hour (Btu/h).

(iii) Commercial package air-conditioning and heating equipment (except small commercial package air conditioning and heating equipment that is air-cooled with a cooling capacity less than 65,000 Btu/h): the energy efficiency ratio (EER in British thermal units per Watt-hour (Btu/Wh)), the coefficient of performance (COP) as necessary to meet the standards set forth in § 431.97, the cooling capacity in British thermal unit per hour (Btu/h), and the type of heating used by the unit.

(iv) Small commercial package air conditioning and heating equipment that is air-cooled with a cooling capacity less than 65,000 Btu/h: The seasonal energy efficiency ratio (SEER in British thermal units per Watt-hour (Btu/Wh)), the heating seasonal performance factor (HSPF in British thermal units per Watt-hour(Btu/Wh)) as necessary to meet the standards set forth in § 431.97, and the cooling capacity in British thermal units per hour (Btu/h).

(v) Package terminal air conditioners: The energy efficiency ratio (EER in British thermal units per Watt-hour (Btu/Wh)), the cooling capacity in British thermal units per hour (Btu/h), and the wall sleeve dimensions in inches (in).

(vi) Package terminal heat pumps: The energy efficiency ratio (EER in British thermal units per Watt-hour (Btu/W-h)), the coefficient of performance (COP), the cooling capacity in British thermal units per hour (Btu/h), and the wall sleeve dimensions in inches (in).

(vii) Single package vertical air conditioner: The energy efficiency ratio (EER in British thermal units per Watt-hour (Btu/Wh)) and the cooling capacity in British thermal units per hour (Btu/h).

(viii) Single package vertical heat pumps: The energy efficiency ratio (EER in British thermal units per Watt-hour (Btu/Wh)), the coefficient of performance (COP), and the cooling capacity in British thermal units per hour (Btu/h).

(c) Alternative methods for determining efficiency or energy use for commercial HVAC equipment can be found in § 429.70 of this subpart.

[76 FR 12451, Mar. 7, 2011; 76 FR 24775, May 2, 2011]

EFFECTIVE DATE NOTE: At 78 FR 79594, Dec. 31, 2013, § 429.43 was amended by revising paragraph (a), effective Jan. 30, 2014. For the convenience of the user, the revised text is set forth as follows:

§ 429.43 Commercial heating, ventilating, air conditioning (HVAC) equipment.

(a) *Determination of represented value.* Manufacturers can determine the represented value, which includes the certified rating, for each basic model of commercial HVAC equipment either by testing, in conjunction with the applicable sampling provisions, or by applying an AEDM.

(1) *Units to be tested.* (i) If the represented value is determined through testing, the general requirements of § 429.11 are applicable; and

(ii) For each basic model selected for testing, a sample of sufficient size shall be randomly selected and tested to ensure that—

(A) Any represented value of energy consumption or other measure of energy use of a basic model for which consumers would favor lower values shall be greater than or equal to the higher of:

(*1*) The mean of the sample, where:

$$\bar{x} = \frac{1}{n}\sum_{i=1}^{n} x_i$$

And, $\bar{x}$ is the sample mean; n is the number of samples; and x_i is the ith sample; or,

(*2*) The upper 95 percent confidence limit (UCL) of the true mean divided by 1.05, where:

$$UCL = \bar{x} + t_{.95}\left(\frac{s}{\sqrt{n}}\right)$$

And $\bar{x}$ is the sample mean; s is the sample standard deviation; n is the number of samples; and $t_{0.95}$ is the t statistic for a 95% one-tailed confidence interval with n-1 degrees of freedom (from Appendix A to subpart B of part 429). And,

(B) Any represented value of energy efficiency or other measure of energy consumption of a basic model for which consumers would favor higher values shall be less than or equal to the lower of:

(*1*) The mean of the sample, where:

$$\bar{x} = \frac{1}{n}\sum_{i=1}^{n} x_i$$

And, $\bar{x}$ is the sample mean; n is the number of samples; and x_i is the ith sample; or,

(*2*) The lower 95 percent confidence limit (LCL) of the true mean divided by 0.95, where:

$$LCL = \bar{x} - t_{.95}\left(\frac{s}{\sqrt{n}}\right)$$

And $\bar{x}$ is the sample mean; s is the sample standard deviation; n is the number of samples; and $t_{0.95}$ is the t statistic for a 95% one-tailed confidence interval with n-1 degrees of freedom (from Appendix A to subpart B of part 429).

(2) *Alternative efficiency determination methods.* In lieu of testing, a represented value of efficiency or consumption for a basic model of commercial HVAC equipment must be determined through the application of an AEDM pursuant to the requirements of § 429.70 and the provisions of this section, where:

(i) Any represented value of energy consumption or other measure of energy use of

a basic model for which consumers would favor lower values shall be greater than or equal to the output of the AEDM and less than or equal to the Federal standard for that basic model; and

(ii) Any represented value of energy efficiency or other measure of energy consumption of a basic model for which consumers would favor higher values shall be less than or equal to the output of the AEDM and greater than or equal to the Federal standard for that basic model.

* * * * *

§ 429.44 Commercial water heating equipment.

(a) *Sampling plan for selection of units for testing.* (1) The requirements of § 429.11 are applicable to commercial WH equipment; and

(2) For each basic model of commercial water heating (WH) equipment, efficiency must be determined either by testing, in accordance with applicable test procedures in §§ 431.76, 431.86, 431.96, or 431.106 and the provisions of this section, or by application of an alternative efficiency determination method (AEDM) that meets the requirements of § 429.48 and the provisions of this section. For each basic model of commercial WH equipment, a sample of sufficient size shall be selected and tested to ensure that—

(i) Any represented value of maximum standby loss or other measure of energy usage of a basic model for which consumers would favor lower values shall be greater than or equal to the higher of:

(A) The mean of the sample, where:

$$\bar{x} = \frac{1}{n}\sum_{i=1}^{n} x_i$$

and, $\bar{x}$ is the sample mean; n is the number of samples; and x_i is the maximum of the ith sample;

Or,

(B) The upper 95 percent confidence limit (UCL) of the true mean divided by 1.05, where:

$$UCL = \bar{x} + t_{.95}\left(\frac{s}{\sqrt{n}}\right)$$

And $\bar{x}$ is the sample mean; s is the sample standard deviation; n is the number of samples; and $t_{0.95}$ is the t statistic for a 95% one-tailed confidence interval with n-1 degrees of freedom (from Appendix A).

and

(ii) Any represented value of minimum thermal efficiency or other measure of energy consumption of a basic model for which consumers would favor higher values shall be less than or equal to the lower of:

(A) The mean of the sample, where:

$$\bar{x} = \frac{1}{n}\sum_{i=1}^{n} x_i$$

and, $\bar{x}$ is the sample mean; n is the number of samples; and x_i is the minimum of the ith sample;

Or,

(B) The lower 95 percent confidence limit (LCL) of the true mean divided by 0.95, where:

$$LCL = \bar{x} - t_{.95}\left(\frac{s}{\sqrt{n}}\right)$$

And $\bar{x}$ is the sample mean; s is the sample standard deviation; n is the number of samples; and $t_{0.95}$ is the t statistic for a 95% one-tailed confidence interval with n-1 degrees of freedom (from Appendix A).

(b) *Certification reports.* (1) The requirements of § 429.12 are applicable to commercial WH equipment; and

(2) Pursuant to § 429.12(b)(13), a certification report shall include the following public product-specific information:

(i) Commercial electric storage water heaters: The maximum standby loss in percent per hour (%/hr), and the measured storage volume in gallons (gal).

(ii) Commercial gas-fired and oil-fired storage water heaters: The minimum thermal efficiency in percent (%), the maximum standby loss in British thermal units per hour (Btu/h), the rated storage volume in gallons (gal), the measured storage volume in gallons (gal) and the nameplate input rate in British thermal units per hour (Btu/h).

(iii) Commercial gas-fired and oil-fired instantaneous water heaters greater than or equal to 10 gallons and gas-fired and oil-fired hot water supply boilers greater than or equal to 10 gallons: the minimum thermal efficiency in percent (%), the maximum standby loss in British thermal units per hour (Btu/h), the rated storage volume in gallons (gal), and the nameplate input rate in Btu/h.

(iv) Commercial gas-fired and oil-fired instantaneous water heaters less than 10 gallons and gas-fired and oil-fired hot water supply boilers less than 10 gallons: the minimum thermal efficiency in percent (%) and the storage volume in gallons (g).

(v) Commercial unfired hot water storage tanks: The minimum thermal insulation (*i.e.*, R-value) and the measured storage volume in gallons (gal).

(c) Alternative methods for determining efficiency or energy use for commercial WH equipment can be found in § 429.70 of this subpart.

[76 FR 12451, Mar. 7, 2011; 76 FR 24776, May 2, 2011]

EFFECTIVE DATE NOTE: At 78 FR 79594, Dec. 31, 2013, § 429.44 was amended by revising paragraph (a), effective Jan. 30, 2014. For the convenience of the user, the revised text is set forth as follows:

§ 429.44 Commercial water heating equipment.

(a) *Determination of represented value.* Manufacturers can determine the represented value, which includes the certified rating, for each basic model of commercial water

heating equipment, either by testing, in conjunction with the applicable sampling provisions, or by applying an AEDM.

(1) *Units to be tested.* (i) If the represented value for a given basic model is determined through testing, the general requirements of § 429.11 are applicable; and

(ii) For each basic model selected for testing, a sample of sufficient size shall be randomly selected and tested to ensure that—

(A) Any represented value of energy consumption or other measure of energy use of a basic model for which consumers would favor lower values shall be greater than or equal to the higher of:

(*1*) The mean of the sample, where:

$$\bar{x} = \frac{1}{n}\sum_{i=1}^{n} x_i$$

And, $\bar{x}$ is the sample mean; n is the number of samples; and x_i is the ith sample; or,

(*2*) The upper 95 percent confidence limit (UCL) of the true mean divided by 1.05, where:

$$UCL = \bar{x} + t_{.95}\left(\frac{s}{\sqrt{n}}\right)$$

And $\bar{x}$ is the sample mean; s is the sample standard deviation; n is the number of samples; and $t_{0.95}$ is the t statistic for a 95% one-tailed confidence interval with n-1 degrees of freedom (from Appendix A to subpart B of part 429). And,

(B) Any represented value of energy efficiency or other measure of energy consumption of a basic model for which consumers would favor higher values shall be less than or equal to the lower of:

(*1*) The mean of the sample, where:

$$\bar{x} = \frac{1}{n}\sum_{i=1}^{n} x_i$$

And, $\bar{x}$ is the sample mean; n is the number of samples; and x_i is the ith sample; or,

(*2*) The lower 95 percent confidence limit (LCL) of the true mean divided by 0.95, where:

$$LCL = \bar{x} - t_{.95}\left(\frac{s}{\sqrt{n}}\right)$$

And $\bar{x}$ is the sample mean; s is the sample standard deviation; n is the number of samples; and $t_{0.95}$ is the t statistic for a 95% one-tailed confidence interval with n-1 degrees of freedom (from Appendix A to subpart B of part 429).

(2) *Alternative efficiency determination methods.* In lieu of testing, a represented value of efficiency or consumption for a basic model of commercial water heating equipment must be determined through the application of an AEDM pursuant to the requirements of § 429.70 and the provisions of this section, where:

(i) Any represented value of energy consumption or other measure of energy use of a basic model for which consumers would favor lower values shall be greater than or equal to the output of the AEDM and less

than or equal to the Federal standard for that basic model; and

(ii) Any represented value of energy efficiency or other measure of energy consumption of a basic model for which consumers would favor higher values shall be less than or equal to the output of the AEDM and greater than or equal to the Federal standard for that basic model.

* * * * *

§ 429.45 Automatic commercial ice makers.

(a) *Sampling plan for selection of units for testing.* (1) The requirements of § 429.11 are applicable to automatic commercial ice makers; and

(2) For each basic model of automatic commercial ice maker selected for testing, a sample of sufficient size shall be randomly selected and tested to ensure that—

(i) Any represented value of maximum energy use or other measure of energy consumption of a basic model for which consumers would favor lower values shall be greater than or equal to the higher of:

(A) The mean of the sample, where:

$$\bar{x} = \frac{1}{n}\sum_{i=1}^{n} x_i$$

and, $\bar{x}$ is the sample mean; n is the number of samples; and x_i is the ith sample;

Or,

(B) The upper 95 percent confidence limit (UCL) of the true mean divided by 1.10, where:

$$UCL = \bar{x} + t_{.95}\left(\frac{s}{\sqrt{n}}\right)$$

And $\bar{x}$ is the sample mean; s is the sample standard deviation; n is the number of samples; and $t_{0.95}$ is the t statistic for a 95% two-tailed confidence interval with n-1 degrees of freedom (from Appendix A).

and

(ii) Any represented value of the energy efficiency or other measure of energy consumption of a basic model for which consumers would favor higher values shall be less than or equal to the lower of:

(A) The mean of the sample, where:

$$\bar{x} = \frac{1}{n}\sum_{i=1}^{n} x_i$$

and, $\bar{x}$ is the sample mean; n is the number of samples; and x_i is the ith sample;

Or,

(B) The lower 95 percent confidence limit (LCL) of the true mean divided by 0.90, where:

$$LCL = \bar{x} - t_{.95}\left(\frac{s}{\sqrt{n}}\right)$$

And $\bar{x}$ is the sample mean; s is the sample standard deviation; n is the number of samples; and $t_{0.95}$ is the t statistic for a 95% two-tailed confidence interval with n-1 degrees of freedom (from Appendix A).

(b) *Certification reports.* (1) The requirements of § 429.12 are applicable to automatic commercial ice makers; and

(2) Pursuant to § 429.12(b)(13), a certification report shall include the following public product-specific information: The maximum energy use in kilowatt hours per 100 pounds of ice (kWh/100 lbs ice), the maximum condenser water use in gallons per 100 pounds of ice (gal/100 lbs ice), the harvest rate in pounds of ice per 24 hours (lbs ice/24 hours), the type of cooling, and the equipment type.

[76 FR 12451, Mar. 7, 2011; 76 FR 24776, May 2, 2011]

§ 429.46 Commercial clothes washers.

(a) *Sampling plan for selection of units for testing.* (1) The requirements of § 429.11 are applicable to commercial clothes washers; and

(2) For each basic model of commercial clothes washers, a sample of sufficient size shall be randomly selected and tested to ensure that—

(i) Any represented value of energy or water consumption or other measure of energy or water consumption of a basic model for which consumers would favor lower values shall be greater than or equal to the higher of:

(A) The mean of the sample, where:

$$\bar{x} = \frac{1}{n}\sum_{i=1}^{n} x_i$$

and, $\bar{x}$ is the sample mean; n is the number of samples; and x_i is the ith sample;

Or,

(B) The upper 97½ percent confidence limit (UCL) of the true mean divided by 1.05, where:

$$UCL = \bar{x} + t_{.975}\left(\frac{s}{\sqrt{n}}\right)$$

And $\bar{x}$ is the sample mean; s is the sample standard deviation; n is the number of samples; and $t_{0.975}$ is the t statistic for a 97.5% one-tailed confidence interval with n-1 degrees of freedom (from Appendix A).

and

(ii) Any represented value of the modified energy factor, water factor, or other measure of energy or water consumption of a basic model for which consumers would favor higher values shall be less than or equal to the lower of:

(A) The mean of the sample, where:

$$\bar{x} = \frac{1}{n}\sum_{i=1}^{n} x_i$$

and, $\bar{x}$ is the sample mean; n is the number of samples; and x_i is the ith sample;

Or,

(B) The lower 97½ percent confidence limit (LCL) of the true mean divided by 0.95, where:

$$LCL = \bar{x} - t_{.975}\left(\frac{s}{\sqrt{n}}\right)$$

And $\bar{x}$ is the sample mean; s is the sample standard deviation; n is the number of samples; and $t_{0.975}$ is the t statistic for a 97.5% one-tailed confidence interval with n-1 degrees of freedom (from Appendix A).

(b) *Certification reports.* (1) The requirements of § 429.12 are applicable to commercial clothes washers; and

(2) Pursuant to § 429.12(b)(13), a certification report shall include the following public product-specific information: The modified energy factor (MEF) in cubic feet per kilowatt hour per cycle (cu ft/kWh/cycle) and the water factor in gallons per cubic feet per cycle (gal/cu ft/cycle) for units manufactured on or after January 8, 2013.

[76 FR 12451, Mar. 7, 2011; 76 FR 24777, May 2, 2011]

§ 429.47 Distribution transformers.

(a) *Sampling plan for selection of units for testing.* (1) The requirements of § 429.11 are applicable to distribution transformers; and

(2) For each basic model of distribution transformer, efficiency must be determined either by testing, in accordance with § 431.193 and the provisions of this section, or by application of an AEDM that meets the requirements of § 429.70 and the provisions of this section.

(i) For each basic model selected for testing:

(A) If the manufacturer produces five or fewer units of a basic model over 6 months, each unit must be tested. A manufacturer may not use a basic model with a sample size of fewer than five units to substantiate an AEDM pursuant to § 429.70.

(B) If the manufacturer produces more than five units over 6 months, a sample of at least five units must be selected and tested.

(ii) Any represented value of efficiency of a basic model must satisfy the condition:

$$RE \leq \frac{100}{1 + \left(\frac{100 - \bar{x}}{\bar{x}}\right)\left(\frac{\sqrt{n}}{\sqrt{n} + .08}\right)}$$

where $\bar{x}$ is the average efficiency of the sample.

(b) *Certification reports.* (1) The requirements of § 429.12 are applicable to distribution transformers except that required information in paragraph (b) of this section may be reported by kVA grouping instead of by basic model and paragraph (b)(6) of this section does not apply; and

(2) Pursuant to § 429.12(b)(13), a certification report shall include the following public product-specific information: For the most and least efficient basic models within each ''kVA grouping'' for which part 431 prescribes an efficiency standard, the kVA rating, the insulation type (*i.e.*, low-voltage dry-type, medium-voltage dry-type or liquid-immersed), the number of phases (*i.e.*, single-phase or three-phase), and the basic impulse insulation level (BIL) group rating (for medium-voltage dry-types).

(c) *Alternative methods for determining efficiency or energy use* for distribution transformers can be found in § 429.70 of this subpart.

(d) *Kilovolt ampere (kVA) grouping.* As used in this section, a ''kVA grouping'' is a group of basic models which all have the same kVA rating, have the same insulation type (*i.e.*, low-voltage dry-type, medium-voltage dry-type or liquid-immersed), have the same number of phases (*i.e.*, single-phase or three-phase), and, for medium-voltage dry-types, have the same BIL group rating (*i.e.*, 20–45 kV BIL, 46–95 kV BIL or greater than or equal to96 kV BIL).

§ 429.48 Illuminated exit signs.

(a) *Sampling plan for selection of units for testing.* (1) The requirements of § 429.11 are applicable to illuminated exit signs; and

(2) For each basic model of illuminated exit sign selected for testing, a sample of sufficient size shall be randomly selected and tested to ensure that—

(i) Any represented value of input power demand or other measure of energy consumption of a basic model for which consumers would favor lower values shall be greater than or equal to the higher of:

(A)The mean of the sample, where:

$$\bar{x} = \frac{1}{n}\sum_{i=1}^{n} x_i$$

and, $\bar{x}$ is the sample mean; n is the number of samples; and x_i is the ith sample;

Or,

(B) The upper 95 percent confidence limit (UCL) of the true mean divided by 1.10, where:

$$UCL = \bar{x} + t_{.95}\left(\frac{s}{\sqrt{n}}\right)$$

And $\bar{x}$ is the sample mean; s is the sample standard deviation; n is the number of samples; and $t_{0.95}$ is the t statistic for a 95% two-tailed confidence interval with n-1 degrees of freedom (from Appendix A).

and

(ii) Any represented value of the energy efficiency or other measure of energy consumption of a basic model for which consumers would favor higher values shall be less than or equal to the lower of:

(A) The mean of the sample, where:

$$\bar{x} = \frac{1}{n}\sum_{i=1}^{n} x_i$$

and, $\bar{x}$ is the sample mean; n is the number of samples; and x_i is the ith sample;

Or,

(B) The lower 95 percent confidence limit (LCL) of the true mean divided by 0.90, where:

$$LCL = \bar{x} - t_{.95}\left(\frac{s}{\sqrt{n}}\right)$$

And $\bar{x}$ is the sample mean; s is the sample standard deviation; n is the number of samples; and $t_{0.95}$ is the t statistic for a 95% two-tailed confidence interval with n-1 degrees of freedom (from Appendix A).

(b) *Certification reports.* (1) The requirements of § 429.12 are applicable to illuminated exit signs; and

(2) Pursuant to § 429.12(b)(13), a certification report shall include the following public product-specific information: The input power demand in watts (W) and the number of faces.

[76 FR 12451, Mar. 7, 2011; 76 FR 24778, May 2, 2011]

§ 429.49 Traffic signal modules and pedestrian modules.

(a) *Sampling plan for selection of units for testing.* (1) The requirements of § 429.11 are applicable to traffic signal modules and pedestrian modules; and

(2) For each basic model of traffic signal module or pedestrian module selected for testing, a sample of sufficient size shall be randomly selected and tested to ensure that—

(i) Any represented value of estimated maximum and nominal wattage or other measure of energy consumption of a basic model for which consumers would favor lower values shall be greater than or equal to the higher of:

(A) The mean of the sample, where:

$$\bar{x} = \frac{1}{n}\sum_{i=1}^{n} x_i$$

and, $\bar{x}$ is the sample mean; n is the number of samples; and x_i is the ith sample;

Or,

(B) The upper 95 percent confidence limit (UCL) of the true mean divided by 1.10, where:

$$UCL = \bar{x} + t_{.95}\left(\frac{s}{\sqrt{n}}\right)$$

And $\bar{x}$ is the sample mean; s is the sample standard deviation; n is the number of samples; and $t_{0.95}$ is the t statistic for a 95% two-tailed confidence interval with n-1 degrees of freedom (from Appendix A).

and

(ii) Any represented value of the energy efficiency or other measure of energy consumption of a basic model for which consumers would favor higher values shall be less than or equal to the lower of:

(A) The mean of the sample, where:

$$\bar{x} = \frac{1}{n}\sum_{i=1}^{n} x_i$$

and, $\bar{x}$ is the sample mean; n is the number of samples; and x_i is the ith sample;

Or,

(B) The lower 95 percent confidence limit (LCL) of the true mean divided by 0.90, where:

$$LCL = \bar{x} - t_{.95}\left(\frac{s}{\sqrt{n}}\right)$$

And $\bar{x}$ is the sample mean; s is the sample standard deviation; n is the number of samples; and $t_{0.95}$ is the t statistic for a 95% two-tailed confidence interval with n-1 degrees of freedom (from Appendix A).

(b) *Certification reports.* (1) The requirements of § 429.12 are applicable to traffic signal modules and pedestrian modules; and

(2) Pursuant to § 429.12(b)(13), a certification report shall include the following public product-specific information: The maximum wattage at 74 degrees Celsius (°C) in watts (W), the nominal wattage at 25 degrees Celsius (°C) in watts (W), and the signal type.

[76 FR 12451, Mar. 7, 2011; 76 FR 24778, May 2, 2011]

§ 429.50 Commercial unit heaters.

(a) *Sampling plan for selection of units for testing.* (1) The requirements of § 429.11 are applicable to commercial unit heaters; and

(2) [Reserved]

(b) *Certification reports.* (1) The requirements of § 429.12 are applicable to commercial unit heaters; and

(2) Pursuant to § 429.12(b)(13), a certification report shall include the following public product-specific information: The type of ignition system and a declaration that the manufacturer has incorporated the applicable design requirements.

§ 429.51 Commercial pre-rinse spray valves.

(a) *Sampling plan for selection of units for testing.* (1) The requirements of § 429.11 are applicable to commercial pre-rinse spray valves; and

(2) For each basic model of commercial pre-rinse spray valves selected for testing, a sample of sufficient size shall be randomly selected and tested to ensure that—

(i) Any represented value of water consumption or other measure of water consumption of a basic model for which consumers would favor lower values shall be greater than or equal to the higher of:

(A) The mean of the sample, where:

$$\bar{x} = \frac{1}{n}\sum_{i=1}^{n} x_i$$

and, $\bar{x}$ is the sample mean; n is the number of samples; and x_i is the ith sample;

Or,

(B) The upper 95 percent confidence limit (UCL) of the true mean divided by 1.10, where:

$$UCL = \bar{x} + t_{.95}\left(\frac{s}{\sqrt{n}}\right)$$

And $\bar{x}$ is the sample mean; s is the sample standard deviation; n is the number of samples; and $t_{0.95}$ is the t statistic for a 95% two-tailed confidence interval with n-1 degrees of freedom (from Appendix A).

and

(ii) Any represented value of the water efficiency or other measure of water consumption of a basic model for which consumers would favor higher values shall be less than or equal to the lower of:

(A) The mean of the sample, where:

$$\bar{x} = \frac{1}{n}\sum_{i=1}^{n} x_i$$

and, $\bar{x}$ is the sample mean; n is the number of samples; and x_i is the ith sample;

Or,

(B) The lower 95 percent confidence limit (LCL) of the true mean divided by 0.90, where:

$$LCL = \bar{x} - t_{.95}\left(\frac{s}{\sqrt{n}}\right)$$

And $\bar{x}$ is the sample mean; s is the sample standard deviation; n is the number of samples; and $t_{0.95}$ is the t statistic for a 95% two-tailed confidence interval with n-1 degrees of freedom (from Appendix A).

(b) *Certification reports.* (1) The requirements of § 429.12 are applicable to commercial pre-rinse spray valves; and

(2) Pursuant to § 429.12(b)(13), a certification report shall include the following public product-specific information: The maximum flow rate in gallons per minute (gpm), rounded to the nearest 0.1 gallon.

[76 FR 12451, Mar. 7, 2011; 76 FR 24779, May 2, 2011, as amended at 78 FR 62986, Oct. 23, 2013]

§ 429.52 Refrigerated bottled or canned beverage vending machines.

(a) *Sampling plan for selection of units for testing.* (1) The requirements of § 429.11 are applicable to refrigerated bottled or canned beverage vending machine; and

(2) For each basic model of refrigerated bottled or canned beverage vending machine selected for testing, a sample of sufficient size shall be randomly selected and tested to ensure that—

(i) Any represented value of energy consumption or other measure of energy consumption of a basic model for which consumers would favor lower values shall be greater than or equal to the higher of:

(A) The mean of the sample, where:

$$\bar{x} = \frac{1}{n}\sum_{i=1}^{n} x_i$$

and, $\bar{x}$ is the sample mean; n is the number of samples; and x_i is the ith sample;

Or,

(B) The upper 95 percent confidence limit (UCL) of the true mean divided by 1.10, where:

$$UCL = \bar{x} + t_{.95}\left(\frac{s}{\sqrt{n}}\right)$$

And $\bar{x}$ is the sample mean; s is the sample standard deviation; n is the number of samples; and $t_{0.95}$ is the t statistic for a 95% two-tailed confidence interval with n-1 degrees of freedom (from Appendix A).

and

(ii) Any represented value of the energy efficiency or other measure of energy consumption of a basic model for which consumers would favor higher values shall be less than or equal to the lower of:

(A) The mean of the sample, where:

$$\bar{x} = \frac{1}{n}\sum_{i=1}^{n} x_i$$

and, $\bar{x}$ is the sample mean; n is the number of samples; and x_i is the ith sample;

Or,

(B) The lower 95 percent confidence limit (LCL) of the true mean divided by 0.90, where:

$$LCL = \bar{x} - t_{.95}\left(\frac{s}{\sqrt{n}}\right)$$

And $\bar{x}$ is the sample mean; s is the sample standard deviation; n is the number of samples; and $t_{0.95}$ is the t statistic for a 95% two-tailed confidence interval with n-1 degrees of freedom (from Appendix A).

(b) *Certification reports.* (1) The requirements of § 429.12 are applicable to refrigerated bottled or canned beverage vending machine; and

(2) Pursuant to § 429.12(b)(13), a certification report shall include the following public product-specific information: The maximum average daily energy consumption in kilowatt hours per day (kWh/day), the refrigerated volume (V) in cubic feet (ft^3) used to demonstrate compliance with standards set forth in § 431.296, the ambient temperature in degrees Fahrenheit (°F), and the ambient relative humidity in percent (%) during the test.

[76 FR 12451, Mar. 7, 2011; 76 FR 24779, May 2, 2011, as amended at 76 FR 38292, June 30, 2011]

§ 429.53 Walk-in coolers and walk-in freezers.

(a) *Sampling plan for selection of units for testing.* (1) The requirements of § 429.11 are applicable to walk-in coolers and freezers; and

(2) [Reserved]

(b) *Certification reports.* (1) Except that § 429.12(b)(6) applies to the certified component, the requirements of § 429.12 are applicable to manufacturers of the components of walk-in coolers and freezers (WICFs) listed in paragraph (b)(2) of this section, and;

(2) Pursuant to § 429.12(b)(13), a certification report shall include the following public product-specific information:

(i) For WICF doors: The door type, R-value of the door insulation, and a declaration that the manufacturer has incorporated the applicable design requirements. In addition, for those WICFs with transparent reach-in doors and windows: The glass type of the doors and windows (*e.g.*, double-pane with heat reflective treatment, triple-pane glass with gas fill), and the power draw of the antisweat heater in watts per square foot of door opening.

(ii) For WICF panels: The R-value of the insulation (except for glazed portions of the doors or structural members)

(iii) For WICF fan motors: The motor purpose (*i.e.*, evaporator fan motor or condenser fan motor), the horsepower, and a declaration that the manufacturer has incorporated the applicable design requirements.

[76 FR 12451, Mar. 7, 2011, as amended at 76 FR 65365, Oct. 21, 2011]

§ 429.54 Metal halide lamp ballasts and fixtures.

(a) *Sampling plan for selection of units for testing.* (1) The requirements of § 429.11 are applicable to metal halide lamp ballasts; and

(2) For each basic model of metal halide lamp ballast selected for testing, a

sample of sufficient size, not less than four, shall be selected at random and tested to ensure that:

(i) Any represented value of estimated energy efficiency calculated as the measured output power to the lamp divided by the measured input power to the ballast (P_{out}/P_{in}), of a basic model is less than or equal to the lower of:

(A) The mean of the sample, where:

$$\bar{x} = \frac{1}{n}\sum_{i=1}^{n} x_i$$

and, $\bar{x}$ is the sample mean; n is the number of samples; and x_i is the ith sample;

Or,

(B) The lower 99-percent confidence limit (LCL) of the true mean divided by 0.99.

$$LCL = \bar{x} - t_{.99}\left(\frac{s}{\sqrt{n}}\right)$$

And $\bar{x}$ is the sample mean; s is the sample standard deviation; n is the number of samples; and $t_{0.99}$ is the t statistic for a 99% two-tailed confidence interval with n–1 degrees of freedom (from appendix A).

(b) *Certification reports.* (1) The requirements of § 429.12 are applicable to metal halide lamp ballasts; and

(2) Pursuant to § 429.12(b)(13), a certification report shall include the following public product-specific information: The minimum ballast efficiency in percent (%), the lamp wattage in watts (W), and the type of ballast (*e.g.*, pulse-start, magnetic probe-start, and non-pulse start electronic).

[76 FR 12451, Mar. 7, 2011; 76 FR 24780, May 2, 2011; 76 FR 46202, Aug. 2, 2011]

§ 429.70 Alternative methods for determining energy efficiency or energy use.

(a) *General.* A manufacturer of commercial HVAC and WH equipment, distribution transformers, and central air conditioners and heat pumps may not distribute any basic model of such equipment in commerce unless the manufacturer has determined the energy efficiency of the basic model, either from testing the basic model or from applying an alternative method for determining energy efficiency or energy use (AEDM) to the basic model, in accordance with the requirements of this section. In instances where a manufacturer has tested a basic model to validate the alternative method, the energy efficiency of that basic model must be determined and rated according to results from actual testing. In addition, a manufacturer may not knowingly use an AEDM to overrate the efficiency of a basic model. For each basic model of distribution transformer that has a configuration of windings that allows for more than one nominal rated voltage, the manufacturer must determine the basic model's efficiency either at the voltage at which the highest losses occur or at each voltage at which the transformer is rated to operate.

(b) *Testing.* Testing for each covered product or covered equipment must be done in accordance with the sampling plan provisions established in §§ 429.14 through 429.54 and the testing procedures in parts 430 and 431.

(c) *Alternative efficiency determination method (AEDM) for commercial HVAC and WH equipment*—(1) *Criteria an AEDM must satisfy.* A manufacturer may not apply an AEDM to a basic model to determine its efficiency pursuant to this section unless:

(i) The AEDM is derived from a mathematical model that represents the energy consumption characteristics of the basic model;

(ii) The AEDM is based on engineering or statistical analysis, computer simulation or modeling, or other analytic evaluation of performance data; and

(iii) The manufacturer has substantiated the AEDM, in accordance with paragraph (c)(2) of this section.

(2) *Substantiation of an AEDM*. Before using an AEDM, the manufacturer must substantiate and validate the AEDM as follows:

(i) A manufacturer must first apply the AEDM to three or more basic models that have been tested in accordance with §§ 431.173(b) and 431.175(a). The predicted efficiency calculated for each such basic model from application of the AEDM must be within five percent of the efficiency determined from testing that basic model, and the predicted efficiencies calculated for the tested basic models must, on average, be within one percent of the efficiencies determined from testing such basic models; and

(ii) Using the AEDM, the manufacturer must calculate the efficiency of three or more of its basic models. They must be the manufacturer's highest-selling basic models to which the AEDM could apply and different models than those used to develop the AEDM (*i.e.*, different models than those used in paragraph (c)(2)(i) of this section); and

(iii) The manufacturer must test each of these basic models in accordance with § 431.173(b), and either § 431.174(b) or 431.175(a), whichever is applicable; and

(iv) The predicted efficiency calculated for each such basic model from application of the AEDM must be within five percent of the efficiency determined from testing that basic model, and the average of the predicted efficiencies calculated for the tested basic models must be within one percent of the average of the efficiencies determined from testing these basic models.

(3) *Subsequent verification of an AEDM*. If a manufacturer has used an AEDM pursuant to this section,

(i) The manufacturer must have available for inspection by the Department records showing:

(A) The method or methods used;

(B) The mathematical model, the engineering or statistical analysis, computer simulation or modeling, and other analytic evaluation of performance data on which the AEDM is based;

(C) Complete test data, product information, and related information that the manufacturer generated or acquired under paragraph (c)(1) through (2) of this section; and

(D) The calculations used to determine the average efficiency and energy consumption of each basic model to which an AEDM was applied.

(ii) If requested by the Department, the manufacturer must perform at least one of the following:

(A) Conduct simulations to predict the performance of particular basic models of the commercial HVAC and WH product;

(B) Provide analyses of previous simulations conducted by the manufacturer;

(C) Conduct sample testing of basic models selected by the Department; or

(D) Conduct a combination of these.

(d) *Alternative efficiency determination method for distribution transformers*—A manufacturer may use an AEDM to determine the efficiency of one or more of its untested basic models only if it determines the efficiency of at least five of its other basic models (selected in accordance with paragraph (d)(3) of this section) through actual testing.

(1) *Criteria an AEDM must satisfy*.

(i) The AEDM has been derived from a mathematical model that represents the electrical characteristics of that basic model;

(ii) The AEDM is based on engineering and statistical analysis, computer simulation or modeling, or other analytic evaluation of performance data; and

(iii) The manufacturer has substantiated the AEDM, in accordance with paragraph (d)(2) of this section, by applying it to, and testing, at least five other basic models of the same type, *i.e.*, low-voltage dry-type distribution transformers, medium-voltage dry-type distribution transformers, or liquid-immersed distribution transformers.

(2) *Substantiation of an AEDM*. Before using an AEDM, the manufacturer must substantiate the AEDM's accuracy and reliability as follows:

(i) Apply the AEDM to at least five of the manufacturer's basic models that have been selected for testing in accordance with paragraph (d)(3) of this section, and calculate the power loss for each of these basic models;

(ii) Test at least five units of each of these basic models in accordance with the applicable test procedure and § 429.47, and determine the power loss for each of these basic models;

(iii) The predicted total power loss for each of these basic models, calculated by applying the AEDM pursuant to paragraph (d)(2)(i) of this section, must be within plus or minus five percent of the mean total power loss determined from the testing of that basic model pursuant to paragraph (d)(2)(ii) of this section; and

(iv) Calculate for each of these basic models the percentage that its power loss calculated pursuant to paragraph (d)(2)(i) of this section is of its power loss determined from testing pursuant to paragraph (d)(2)(ii) of this section, compute the average of these percentages, and that calculated average power loss, expressed as a percentage of the average power loss determined from testing, must be no less than 97 percent and no greater than 103 percent.

(3) *Additional testing requirements.* (i) A manufacturer must select basic models for testing in accordance with the following criteria:

(A) Two of the basic models must be among the five basic models with the highest unit volumes of production by the manufacturer in the prior year, or during the prior 12-calendar-month period beginning in 2003,[1] whichever is later;

(B) No two basic models should have the same combination of power and voltage ratings; and

(C) At least one basic model should be single-phase and at least one should be three-phase.

(ii) In any instance where it is impossible for a manufacturer to select basic models for testing in accordance with all of these criteria, the criteria shall be given priority in the order in which they are listed. Within the limits imposed by the criteria, basic models shall be selected randomly.

(4) *Subsequent verification of an AEDM.* (i) Each manufacturer that has used an AEDM under this section shall have available for inspection by the Department of Energy records showing:

(A) The method or methods used;

(B) The mathematical model, the engineering or statistical analysis, computer simulation or modeling, and other analytic evaluation of performance data on which the AEDM is based;

(C) Complete test data, product information, and related information that the manufacturer has generated or acquired pursuant to paragraph (d)(4) of this section; and

(D) The calculations used to determine the efficiency and total power losses of each basic model to which the AEDM was applied.

(ii) If requested by the Department, the manufacturer must perform at least one of the following:

(A) Conduct simulations to predict the performance of particular basic models of distribution transformers specified by the Department;

(B) Provide analyses of previous simulations conducted by the manufacturer;

(C) Conduct sample testing of basic models selected by the Department; or

(D) Conduct a combination of these.

(e) *Alternate Rating Method (ARM) for residential split-system central air conditioners and heat pumps—*

(1) *Criteria an ARM must satisfy.* The basis of the ARM referred to in § 429.16(a)(2)(ii) for residential central air conditioners and heat pumps must be a representation of the test data and calculations of a mechanical vapor-compression refrigeration cycle. The major components in the refrigeration cycle must be modeled as ''fits'' to manufacturer performance data or by graphical or tabular performance data. Heat transfer characteristics of coils may be modeled as a function of face area, number of rows, fins per inch, refrigerant circuitry, air-flow rate and entering-air enthalpy. Additional performance-related characteristics to be considered may include type of expansion device, refrigerant flow rate

[1] When identifying these five basic models, any basic model that does not comply with Federal energy conservation standards for distribution transformers that may be in effect shall be excluded from consideration.

through the expansion device, power of the indoor fan and cyclic-degradation coefficient. Ratings for untested combinations must be derived from the ratings of a combination tested in accordance with § 429.16(a)(2)(i). The seasonal energy efficiency ratio (SEER) and/or heating seasonal performance factor (HSPF) ratings for an untested combination must be set equal to or less than the lower of the SEER and/or HSPF calculated using the applicable DOE-approved alternative rating method (ARM). If the method includes an ARM/simulation adjustment factor(s), determine the value(s) of the factors(s) that yield the best match between the SEER/HSPF determined using the ARM versus the SEER/HSPF determined from testing in accordance with § 429.16(a)(2)(i). Thereafter, apply the ARM using the derived adjustment factor(s) only when determining the ratings for untested combinations having the same outdoor unit.

(2) *Approval of an ARM.* (i) Manufacturers who elect to use an ARM for determining measures of energy consumption under § 429.16(a)(2)(ii)(B)(1) and paragraph (e)(1) of this section must submit a request for DOE to review the ARM. Send the request to: U.S. Department of Energy, Office of Energy Efficiency and Renewable Energy, Building Technologies Program (EE–2J), Attention: Alternative Rating Methods (ARM) for Certification and Compliance, Forrestal Building, 1000 Independence Avenue, SW., Washington, DC 20585–0121.

(ii) Each request to DOE for approval of an ARM must include:

(A) The name, mailing address, telephone number, and e-mail address of the official representing the manufacturer.

(B) Complete documentation of the alternative rating method to allow DOE to evaluate its technical adequacy. The documentation must include a description of the methodology, state any underlying assumptions, and explain any correlations. The documentation should address how the method accounts for the cyclic-degradation coefficient, the type of expansion device, and, if applicable, the indoor fan-off delay. The requestor must submit any computer programs—including spreadsheets—having less than 200 executable lines that implement the ARM. Longer computer programs must be identified and sufficiently explained, as specified above, but their inclusion in the initial submittal package is optional. Applicability or limitations of the ARM (*e.g.*, only covers single-speed units when operating in the cooling mode, covers units with rated capacities of 3 tons or less, not applicable to the manufacturer's product line of non-ducted systems) must be stated in the documentation.

(C) Complete test data from laboratory tests on four mixed (*i.e.*, non-highest-sales-volume combination) systems per each ARM.

(*1*) The four mixed systems must include four different indoor units and at least two different outdoor units. A particular model of outdoor unit may be tested with up to two of the four indoor units. The four systems must include two low-capacity mixed systems and two high-capacity mixed systems. The low-capacity mixed systems may have any capacity. The rated capacity of each high-capacity mixed system must be at least a factor of two higher than its counterpart low-capacity mixed system. The four mixed systems must meet the applicable energy conservation standard in § 430.32(c) in effect at the time of the rating.

(*2*) The four indoor units must come from at least two different coil families, with a maximum of two indoor units coming from the same coil family. Data for two indoor units from the same coil family, if submitted, must come from testing with one of the ''low-capacity mixed systems'' and one of the ''high-capacity mixed systems.'' A mixed system indoor coil may come from the same coil family as the highest-sales-volume-combination indoor unit (*i.e.*, the ''matched'' indoor unit) for the particular outdoor unit. Data on mixed systems where the indoor unit is now obsolete will be accepted towards the ARM-validation submittal requirement if it is from the same coil family as other indoor units still in production.

(*3*) The first two sentences of paragraph (e)(2)(ii)(C)(*2*) of this section do not apply if the manufacturer offers indoor units from only one coil family. In

this case only, all four indoor coils must be selected from this one coil family. If approved, the ARM will be specifically limited to applications for this one coil family.

(D) All product information on each mixed system indoor unit, each matched system indoor unit, and each outdoor unit needed to implement the proposed ARM. The calculated ratings for the four mixed systems, as determined using the proposed ARM, must be provided along with any other related information that will aid the verification process.

(E) If request for approval is for an updated ARM, manufacturers must identify modifications made to the ARM since the last submittal, including any ARM/simulation adjustment factor(s) added since the ARM was last approved by DOE.

(iii) Approval must be received from the Department to use the ARM before the ARM may be used for rating split-system central air conditioners and heat pumps. If a manufacturer has a DOE-approved ARM for products also distributed in commerce by a private labeler, the ARM may also be used by the private labeler for rating these products. Once an ARM is approved, DOE may contact a manufacturer to learn if their ARM has been modified in any way and to verify that the ARM is being applied as approved. DOE will give follow-up priority to individual combinations having questionably high ratings (*e.g.*, a coil-only system having a rating that exceeds the rating of a coil-only highest sales volume combination by more than 6 percent).

(3) *Changes to DOE's regulations requiring re-approval of an ARM.* Manufacturers who elect to use an ARM for determining measures of energy consumption under § 429.16(a)(2)(ii)(B)(*1*) and paragraph (e)(1) of this section must submit a request for DOE to review the ARM when:

(i) DOE amends the energy conservation standards as specified in § 430.32 for residential central air conditioners and heat pumps. In this case, any testing and evidence required under paragraph (e)(2) of this section shall be developed with units that meet the amended energy conservation standards specified in § 430.32. Re-approval for the ARM must be obtained before the compliance date of amended energy conservation standards. (ii) DOE amends the test procedure for residential air conditioners and heat pumps as specified in appendix M to subpart B of part 430. Re-approval for the ARM must be obtained before the compliance date of amended test procedures.

(4) Manufacturers that elect to use an ARM for determining measures of energy consumption under § 429.16(a)(2)(ii)(B)(*1*) and paragraph (e)(1) of this section must regularly either subject a sample of their units to independent testing, *e.g.*, through a voluntary certification program, in accordance with the applicable DOE test procedure, or have the representations reviewed by an independent state-registered professional engineer who is not an employee of the manufacturer. The manufacturer may continue to use the ARM only if the testing establishes, or the registered professional engineer certifies, that the results of the ARM accurately represent the energy consumption of the unit(s). Any proposed change to the alternative rating method must be approved by DOE prior to its use for rating.

(5) Manufacturers who choose to use computer simulation or engineering analysis for determining measures of energy consumption under § 429.16(a)(2)(ii)(B)(*1*) and paragraphs (e)(1) through (e)(4) of this section must permit representatives of the Department of Energy to inspect for verification purposes the simulation method(s) and computer program(s) used. This inspection may include conducting simulations to predict the performance of particular outdoor unit ''indoor'' unit combinations specified by DOE, analysis of previous simulations conducted by the manufacturer, or both.

[76 FR 12451, Mar. 7, 2011; 76 FR 24780, May 2, 2011]

EFFECTIVE DATE NOTE: At 78 FR 79595, Dec. 31, 2013, § 429.70 was amended by revising paragraphs (a), (b), and (c), effective Jan. 30, 2014. For the convenience of the user, the revised text is set forth as follows:

§ 429.70 Alternative methods for determining energy efficiency and energy use.

(a) *General applicability of an AEDM.* A manufacturer of covered products or covered

equipment explicitly authorized to use an AEDM in §§429.14 through 429.54 may not distribute any basic model of such equipment in commerce unless the manufacturer has determined the energy efficiency of the basic model, either from testing the basic model in conjunction with DOE's certification sampling plans and statistics or from applying an alternative method for determining energy efficiency or energy use (AEDM) to the basic model, in accordance with the requirements of this section. In instances where a manufacturer has tested a basic model, the manufacturer may not knowingly use an AEDM to overrate the efficiency (or underrate the consumption) of the model.

(b) *Testing*. Testing for each covered product or covered equipment must be done in accordance with the sampling plan provisions established in §429.11 and the testing procedures in parts 430 and 431 of this chapter.

(c) *Alternative efficiency determination method (AEDM) for commercial HVAC, WH, and refrigeration equipment*— (1) *Criteria an AEDM must satisfy*. A manufacturer may not apply an AEDM to a basic model to determine its efficiency pursuant to this section unless:

(i) The AEDM is derived from a mathematical model that estimates the energy efficiency or energy consumption characteristics of the basic model as measured by the applicable DOE test procedure;

(ii) The AEDM is based on engineering or statistical analysis, computer simulation or modeling, or other analytic evaluation of performance data; and

(iii) The manufacturer has validated the AEDM, in accordance with paragraph (c)(2) of this section with basic models that meet the current Federal energy conservation standards.

(2) *Validation of an AEDM*. Before using an AEDM, the manufacturer must validate the AEDM's accuracy and reliability as follows:

(i) The manufacturer must select at least the minimum number of basic models for each validation class specified in paragraph (c)(2)(iv) of this section to which the particular AEDM applies. Using the AEDM, calculate the energy use or efficiency for each of the selected basic models. Test a single unit of each selected basic model in accordance with paragraph (c)(2)(iii) of this section. Compare the results from the single unit test and the AEDM energy use or efficiency output according to paragraph (c)(2)(ii) of this section. The manufacturer is responsible for ensuring the accuracy and reliability of the AEDM.

(ii) *Individual model tolerances*. (A) For those covered products with an energy-efficiency metric, the predicted efficiency for each model calculated by applying the AEDM may not be more than five percent greater than the efficiency determined from the corresponding test of the model.

(B) For those covered products with an energy-consumption metric, the predicted energy consumption for each model, calculated by applying the AEDM, may not be more than five percent less than the energy consumption determined from the corresponding test of the model.

(C) For all covered products, the predicted energy efficiency or consumption for each model calculated by applying the AEDM must meet or exceed the applicable federal energy conservation performance standard.

(iii) *Additional test unit requirements*. (A) Each AEDM must be supported by test data obtained from physical tests of current models; and

(B) Test results used to validate the AEDM must meet or exceed current, applicable Federal standards as specified in part 431 of this chapter; and

(C) Each test must have been performed in accordance with the DOE test procedure specified in parts 430 or 431 of this chapter or test procedure waiver for which compliance is required at the time the basic model is distributed in commerce.

(iv) *Validation classes*.

Validation class	Minimum number of distinct models that must be tested per AEDM
Air-Cooled, Split and Packaged Air Conditioners (ACs) and Heat Pumps (HPs) less than 65,000 Btu/h Cooling Capacity (3-Phase).	2 Basic Models.
(A) Commercial HVAC validation classes	
Air-Cooled, Split and Packaged ACs and HPs greater than or equal to 65,000 Btu/h Cooling Capacity and Less than 760,000 Btu/h Cooling Capacity.	2 Basic Models.
Water-Cooled, Split and Packaged ACs and HPs, All Cooling Capacities	2 Basic Models.
Evaporatively-Cooled, Split and Packaged ACs and HPs, All Capacities	2 Basic Models.
Water-Source HPs, All Capacities	2 Basic Models.
Single Package Vertical ACs and HPs	2 Basic Models.
Packaged Terminal ACs and HPs	2 Basic Models.
Air-Cooled, Variable Refrigerant Flow ACs and HPs	2 Basic Models.
Water-Cooled, Variable Refrigerant Flow ACs and HPs	2 Basic Models.
Computer Room Air Conditioners, Air Cooled	2 Basic Models.
Computer Room Air Conditioners, Water-Cooled	2 Basic Models.

Validation class	Minimum number of distinct models that must be tested per AEDM
(B) Commercial water heater validation classes	
Gas-fired Water Heaters and Hot Water Supply Boilers Less than 10 Gallons	2 Basic Models.
Gas-fired Water Heaters and Hot Water Supply Boilers Greater than or Equal to 10 Gallons	2 Basic Models.
Oil-fired Water Heaters and Hot Water Supply Boilers Less than 10 Gallons	2 Basic Models.
Oil-fired Water Heaters and Hot Water Supply Boilers Greater than or Equal to 10 Gallons	2 Basic Models.
Electric Water Heaters	2 Basic Models.
Heat Pump Water Heaters	2 Basic Models.
Unfired Hot Water Storage Tanks	2 Basic Models.
(C) Commercial packaged boilers validation classes	
Gas-fired, Hot Water Only Commercial Packaged Boilers	2 Basic Models.
Gas-fired, Steam Only Commercial Packaged Boilers	2 Basic Models.
Gas-fired Hot Water/Steam Commercial Packaged Boilers	2 Basic Models.
Oil-fired, Hot Water Only Commercial Packaged Boilers	2 Basic Models.
Oil-fired, Steam Only Commercial Packaged Boilers	2 Basic Models.
Oil-fired Hot Water/Steam Commercial Packaged Boilers	2 Basic Models.
(D) Commercial furnace validation classes	
Gas-fired Furnaces	2 Basic Models.
Oil-fired Furnaces	2 Basic Models.
(E) Commercial refrigeration equipment validation classes	
Self-Contained Open Refrigerators	2 Basic Models.
Self-Contained Open Freezers	2 Basic Models.
Remote Condensing Open Refrigerators	2 Basic Models.
Remote Condensing Open Freezers	2 Basic Models.
Self-Contained Closed Refrigerators	2 Basic Models.
Self-Contained Closed Freezers	2 Basic Models.
Remote Condensing Closed Refrigerators	2 Basic Models.
Remote Condensing Closed Freezers	2 Basic Models.

[1] The minimum number of tests indicated above must be comprised of a transparent model, a solid model, a vertical model, a semi-vertical model, a horizontal model, and a service-over-the counter model, as applicable based on the equipment offering. However, manufacturers do not need to include all types of these models if it will increase the minimum number of tests that need to be conducted.

(3) *AEDM records retention requirements*. If a manufacturer has used an AEDM to determine representative values pursuant to this section, the manufacturer must have available upon request for inspection by the Department records showing:

(i) The AEDM, including the mathematical model, the engineering or statistical analysis, and/or computer simulation or modeling that is the basis of the AEDM;

(ii) Product information, complete test data, AEDM calculations, and the statistical comparisons from the units tested that were used to validate the AEDM pursuant to paragraph (c)(2) of this section; and

(iii) Product information and AEDM calculations for each basic model to which the AEDM has been applied.

(4) *Additional AEDM requirements*. If requested by the Department and at DOE's discretion, the manufacturer must perform at least one of the following:

(i) Conduct simulations before representatives of the Department to predict the performance of particular basic models of the product to which the AEDM was applied;

(ii) Provide analyses of previous simulations conducted by the manufacturer; or

(iii) Conduct certification testing of basic models selected by the Department.

(5) *AEDM verification testing*. DOE may use the test data for a given individual model generated pursuant to § 429.104 to verify the certified rating determined by an AEDM as long as the following process is followed:

(i) *Selection of units*. DOE will obtain units for test from retail, where available. If units cannot be obtained from retail, DOE will request that a unit be provided by the manufacturer;

(ii) *Lab requirements*. DOE will conduct testing at an independent, third-party testing facility of its choosing. In cases where no third-party laboratory is capable of testing the equipment, it may be tested at a manufacturer's facility upon DOE's request.

(iii) *Manufacturer participation*. [Reserved]

(iv) *Testing*. At no time during verification testing may the lab and the manufacturer communicate without DOE authorization. All verification testing will be conducted in accordance with the applicable DOE test procedure, as well as each of the following to the extent that they apply:

(A) Any active test procedure waivers that have been granted for the basic model;

(B) Any test procedure guidance that has been issued by DOE;

(C) The installation and operations manual that is shipped with the unit;

(D) Any additional information that was provided by the manufacturer at the time of certification (prior to DOE obtaining the unit for test); and

(E) If during test set-up or testing, the lab indicates to DOE that it needs additional information regarding a given basic model in order to test in accordance with the applicable DOE test procedure, DOE may organize a meeting between DOE, the manufacturer and the lab to provide such information.

(v) *Failure to meet certified rating*. If a model tests worse than its certified rating by an amount exceeding the tolerance prescribed in paragraph (c)(5)(vi) of this section, DOE will notify the manufacturer. DOE will provide the manufacturer with all documentation related to the test set up, test conditions, and test results for the unit. Within the timeframe allotted by DOE, the manufacturer may then:

(A) Present all claims regarding testing validity; and

(B) If the manufacturer was not on site for the initial test set-up, request a retest of the previously tested unit with manufacturer and DOE representatives on-site for the test set-up. DOE will not conduct the retest using a different unit of the same basic model unless DOE and the manufacturer determine it is necessary based on the test results, claims presented, and DOE regulations.

(vi) *Tolerances*. (A) For consumption metrics, the result from a DOE verification test must be less than or equal to the certified rating × (1 + the applicable tolerance).

(B) For efficiency metrics, the result from a DOE verification test must be greater than or equal to the certified rating × (1 − the applicable tolerance).

Equipment	Metric	Applicable tolerance
Commercial Packaged Boilers	Combustion Efficiency	5% (0.05)
	Thermal Efficiency	5% (0.05)
Commercial Water Heaters or Hot Water Supply Boilers	Thermal Efficiency	5% (0.05)
	Standby Loss	10% (0.1)
Unfired Storage Tanks	R-Value	10% (0.1)
Air-Cooled, Split and Packaged ACs and HPs less than 65,000 Btu/h	Seasonal Energy-Efficiency Ratio	5% (0.05)
Cooling Capacity (3-Phase)	Heating Season Performance Factor	5% (0.05)
	Energy Efficiency Ratio	10% (0.1)
Air-Cooled, Split and Packaged ACs and HPs greater than or equal to 65,000 Btu/h Cooling Capacity and Less than 760,000 Btu/h Cooling Capacity.	Energy Efficiency Ratio	5% (0.05)
	Coefficient of Performance	5% (0.05)
	Integrated Energy Efficiency Ratio	10% (0.1)
Water-Cooled, Split and Packaged ACs and HPs, All Cooling Capacities	Energy Efficiency Ratio	5% (0.05)
	Coefficient of Performance	5% (0.05)
	Integrated Energy Efficiency Ratio	10% (0.1)
Evaporatively-Cooled, Split and Packaged ACs and HPs, All Capacities	Energy Efficiency Ratio	5% (0.05)
	Coefficient of Performance	5% (0.05)
	Integrated Energy Efficiency Ratio	10% (0.1)
Water-Source HPs, All Capacities	Energy Efficiency Ratio	5% (0.05)
	Coefficient of Performance	5% (0.05)
	Integrated Energy Efficiency Ratio	10% (0.1)
Single Package Vertical ACs and HPs	Energy Efficiency Ratio	5% (0.05)
	Coefficient of Performance	5% (0.05)
Packaged Terminal ACs and HPs	Energy Efficiency Ratio	5% (0.05)
	Coefficient of Performance	5% (0.05)
Variable Refrigerant Flow ACs and HPs	Energy Efficiency Ratio	5% (0.05)
	Coefficient of Performance	5% (0.05)
	Integrated Energy Efficiency Ratio	10% (0.1)
Computer Room Air Conditioners	Sensible Coefficient of Performance	5% (0.05)
Commercial Warm-Air Furnaces	Thermal Efficiency	5% (0.05)
Commercial Refrigeration Equipment	Daily Energy Consumption	5% (0.05)

(vii) *Invalid rating*. If, following discussions with the manufacturer and a retest where applicable, DOE determines that the verification testing was conducted appropriately in accordance with the DOE test procedure, DOE will issue a determination that the rating for the model is invalid. The manufacturer must elect, within 15 days, one of the following to be completed in a time frame specified by DOE, which is never to exceed 180 days:

(A) Re-rate and re-certify the model based on DOE's test data alone; or

(B) Discontinue the model through the certification process; or

(C) Conduct additional testing and re-rate and re-certify the basic model based on all test data collected, including DOE's test data.

(viii) *AEDM use*. (A) If DOE has determined that a manufacturer made invalid ratings on two or more models rated using the same

AEDM within a 24 month period, the manufacturer must take the action listed in the table corresponding to the number of invalid certified ratings. The twenty-four month period begins with a DOE determination that a rating is invalid through the process outlined above. Additional invalid ratings apply for the purposes of determining the appropriate consequences if the subsequent determination(s) is based on selection of a unit for testing within the twenty-four month period (i.e., subsequent determinations need not be made within 24 months).

Number of invalid certified ratings from the same AEDM[2] within a rolling 24 month period[3]	Required manufacturer actions
2	Submit different test data and reports from testing to validate that AEDM within the validation classes to which it is applied.[1] Adjust the ratings as appropriate.
4	Conduct double the minimum number of validation tests for the validation classes to which the AEDM is applied. Note, the tests required under this paragraph (c)(5)(viii) must be performed on different models than the original tests required under paragraph (c)(2) of this section.
6	Conduct the minimum number of validation tests for the validation classes to which the AEDM is applied at a third-part test facility; And Conduct addition testing, which is equal to ½ the minimum number of validation tests for the validation classes to which the AEDM is applied , at either the manufacturer's facility or a third-party test facility, at the manufacturer's discretion. Note, the tests required under this paragraph (c)(5)(viii) must be performed on different models than the original tests performed under paragraph (c)(2) of this section.
> = 8	Manufacturer has lost privilege to use AEDM. All ratings for models within the validation classes to which the AEDM applied should be rated via testing. Distribution cannot continue until certification(s) are corrected to reflect actual test data.

[1] A manufacturer may discuss with DOE's Office of Enforcement whether existing test data on different basic models within the validation classes to which that specific AEDM was applied may be used to meet this requirement.

[2] The ''same AEDM'' means a computer simulation or mathematical model that is identified by the manufacturer at the time of certification as having been used to rate a model or group of models.

[3] The twenty-four month period begins with a DOE determination that a rating is invalid through the process outlined above. Additional invalid ratings apply for the purposes of determining the appropriate consequences if the subsequent determination(s) is based on testing of a unit that was selected for testing within the twenty-four month period (i.e., subsequent determinations need not be made within 24 months).

(B) If, as a result of eight or more invalid ratings, a manufacturer has lost the privilege of using an AEDM for rating, the manufacturer may regain the ability to use an AEDM by:

(*1*) Investigating and identifying cause(s) for failures;

(*2*) Taking corrective action to address cause(s);

(*3*) Performing six new tests per validation class, a minimum of two of which must be performed by an independent, third-party laboratory to validate the AEDM; and

(*4*) Obtaining DOE authorization to resume use of the AEDM.

* * * * *

§ 429.71 Maintenance of records.

(a) The manufacturer of any covered product or covered equipment shall establish, maintain, and retain the records of certification reports, of the underlying test data for all certification testing, and of any other testing conducted to satisfy the requirements of this part, part 430, and part 431. Any manufacturer who chooses to use an alternative method for determining energy efficiency or energy use in accordance with § 429.70 must retain the records required by that section, any other records of any testing performed to support the use of the alternative method, and any certifications required by that section, on file for review by DOE for two years following the discontinuance of all models or combinations whose ratings were based on the alternative method.

(b) Such records shall be organized and indexed in a fashion that makes them readily accessible for review by DOE upon request.

(c) The records shall be retained by the manufacturer for a period of two years from the date that the manufacturer or third party submitter has notified DOE that the model has been discontinued in commerce.

APPENDIX A TO SUBPART B OF PART 429—STUDENT'S T-DISTRIBUTION VALUES FOR CERTIFICATION TESTING

FIGURE 1—T-DISTRIBUTION VALUES FOR CERTIFICATION TESTING

[One-Sided]

Degrees of freedom (from Appendix A)	Confidence Interval			
	90%	95%	97.5%	99%
1	3.078	6.314	12.71	31.82
2	1.886	2.920	4.303	6.965
3	1.638	2.353	3.182	4.541
4	1.533	2.132	2.776	3.747
5	1.476	2.015	2.571	3.365
6	1.440	1.943	2.447	3.143
7	1.415	1.895	2.365	2.998
8	1.397	1.860	2.306	2.896
9	1.383	1.833	2.262	2.821
10	1.372	1.812	2.228	2.764
11	1.363	1.796	2.201	2.718
12	1.356	1.782	2.179	2.681
13	1.350	1.771	2.160	2.650
14	1.345	1.761	2.145	2.624
15	1.341	1.753	2.131	2.602
16	1.337	1.746	2.120	2.583
17	1.333	1.740	2.110	2.567
18	1.330	1.734	2.101	2.552
19	1.328	1.729	2.093	2.539
20	1.325	1.725	2.086	2.528

[76 FR 12451, Mar. 7, 2011; 76 FR 24780, May 2, 2011]

Subpart C—Enforcement

§ 429.100 Purpose and scope.

This subpart describes the enforcement authority of DOE to ensure compliance with the conservation standards and regulations.

§ 429.102 Prohibited acts subjecting persons to enforcement action.

(a) Each of the following actions is prohibited:

(1) Failure of a manufacturer to provide, maintain, permit access to, or copying of records required to be supplied under the Act and this part or failure to make reports or provide other information required to be supplied under the Act and this part, including but not limited to failure to properly certify covered products and covered equipment in accordance with § 429.12 and §§ 429.14 through 429.54;

(2) Failure to test any covered product or covered equipment subject to an applicable energy conservation standard in conformance with the applicable test requirements prescribed in 10 CFR parts 430 or 431;

(3) Deliberate use of controls or features in a covered product or covered equipment to circumvent the requirements of a test procedure and produce test results that are unrepresentative of a product's energy or water consumption if measured pursuant to DOE's required test procedure;

(4) Failure of a manufacturer to supply at the manufacturer's expense a requested number of covered products or covered equipment to a designated test laboratory in accordance with a test notice issued by DOE;

(5) Failure of a manufacturer to permit a DOE representative to observe any testing required by the Act and this part and inspect the results of such testing;

(6) Distribution in commerce by a manufacturer or private labeler of any new covered product or covered equipment that is not in compliance with an applicable energy conservation standard prescribed under the Act;

(7) Distribution in commerce by a manufacturer or private labeler of a basic model of covered product or covered equipment after a notice of noncompliance determination has been issued to the manufacturer or private labeler;

(8) Knowing misrepresentation by a manufacturer or private labeler by certifying an energy use or efficiency rating of any covered product or covered equipment distributed in commerce in a manner that is not supported by test data;

(9) For any manufacturer, distributor, retailer, or private labeler to distribute in commerce an adapter that—

(i) Is designed to allow an incandescent lamp that does not have a medium screw base to be installed into a fixture or lamp holder with a medium screw base socket; and

(ii) Is capable of being operated at a voltage range at least partially within 110 and 130 volts; or

(10) For any manufacturer or private labeler to knowingly sell a product to a distributor, contractor, or dealer with knowledge that the entity routinely violates any regional standard applicable to the product.

(b) When DOE has reason to believe that a manufacturer or private labeler has undertaken a prohibited act listed in paragraph (a) of this section, DOE may:

(1) Issue a notice of noncompliance determination;

(2) Impose additional certification testing requirements;

(3) Seek injunctive relief;

(4) Assess a civil penalty for knowing violations; or

(5) Undertake any combination of the above.

§ 429.104 Assessment testing.

DOE may, at any time, test a basic model to assess whether the basic model is in compliance with the applicable energy conservation standard(s).

§ 429.106 Investigation of compliance.

(a) DOE may initiate an investigation that a basic model may not be compliant with an applicable conservation standard, certification requirement or other regulation at any time.

(b) DOE may, at any time, request any information relevant to determining compliance with any requirement under parts 429, 430 and 431, including the data underlying certification of a basic model. Such data may be used by DOE to make a determination of compliance or noncompliance with an applicable standard.

§ 429.110 Enforcement testing.

(a) *General provisions.* (1) If DOE has reason to believe that a basic model is not in compliance it may test for enforcement.

(2) DOE will select and test units pursuant to paragraphs (c) and (e) of this section.

(3) Testing will be conducted at a lab accredited to the International Organization for Standardization (ISO)/International Electrotechnical Commission (IEC), ''General requirements for the competence of testing and calibration laboratories,'' ISO/IEC 17025:2005(E) (incorporated by reference; *see* § 429.4). If testing cannot be completed at an independent lab, DOE, at its discretion, may allow enforcement testing at a manufacturer's lab, so long as the lab is accredited to ISO/IEC 17025:2005(E) and DOE representatives witness the testing.

(b) *Test notice.* (1) To obtain units for enforcement testing to determine compliance with an applicable standard, DOE will issue a test notice addressed to the manufacturer in accordance with the following requirements:

(i) DOE will send the test notice to the manufacturer's certifying official or other company official.

(ii) The test notice will specify the basic model that will be selected for testing, the method of selecting the test sample, the maximum size of the sample and the size of the initial test sample, the dates at which testing is scheduled to be started and completed, and the facility at which testing will be conducted. The test notice may also provide for situations in which the selected basic model is unavailable for testing and may include alternative models or basic models.

(iii) DOE will state in the test notice that it will select the units of a basic model to be tested from the manufacturer, from one or more distributors, and/or from one or more retailers. If any unit is selected from a distributor or retailer, the manufacturer shall make arrangements with the distributor or retailer for compensation for or replacement of any such units.

(iv) DOE may require in the test notice that the manufacturer of a basic model ship or cause to be shipped from a retailer or distributor at its expense the requested number of units of a basic model specified in such test notice to the testing laboratory specified in the test notice. The manufacturer shall ship the specified initial test unit(s) of the basic model to the testing laboratory within 5 working days from the time units are selected.

(v) If DOE determines that the units identified are low-volume or built-to-order products, DOE will contact the manufacturer to develop a plan for enforcement testing in lieu of paragraphs (ii)–(iv) of this section.

(2) [Reserved]

(c) *Test unit selection.* (1) To select units for testing from a:

(i) Manufacturer's warehouse, distributor, or other facility affiliated with the manufacturer. DOE will select

a batch sample at random in accordance with the provisions in paragraph (e) of this section and the conditions specified in the test notice. DOE will randomly select an initial test sample of units from the batch sample for testing in accordance with appendices A through C of this subpart. DOE will make a determination whether an alternative sample size will be used in accordance with the provisions in paragraph (e)(1)(iv) of this section.

(ii) Retailer or other facility not affiliated with the manufacturer. DOE will select an initial test sample of units at random that satisfies the minimum units necessary for testing in accordance with the provisions in appendices A through C of this subpart and the conditions specified in the test notice. Depending on the results of the testing, DOE may select additional units for testing from a retailer in accordance with appendices A through C of this subpart. If the full sample is not available from a retailer, DOE will make a determination whether an alternative sample size will be used in accordance with the provisions in paragraph (e)(1)(iv) of this section.

(2) Units tested in accordance with the applicable test procedure under this part by DOE or another Federal agency, pursuant to other provisions or programs, may count toward units in the test sample.

(3) The resulting test data shall constitute official test data for the basic model. Such test data will be used by DOE to make a determination of compliance or noncompliance if a sufficient number of tests have been conducted to satisfy the requirements of paragraph (e) of this section and appendices A through C of this subpart.

(d) *Test unit preparation*. (1) Prior to and during testing, a test unit selected for enforcement testing shall not be prepared, modified, or adjusted in any manner unless such preparation, modification, or adjustment is allowed by the applicable DOE test procedure. One test shall be conducted for each test unit in accordance with the applicable test procedures prescribed in parts 430 and 431.

(2) No quality control, testing or assembly procedures shall be performed on a test unit, or any parts and subassemblies thereof, that is not performed during the production and assembly of all other units included in the basic model.

(3) A test unit shall be considered defective if such unit is inoperative or is found to be in noncompliance due to failure of the unit to operate according to the manufacturer's design and operating instructions. Defective units, including those damaged due to shipping or handling, shall be reported immediately to DOE. DOE may authorize testing of an additional unit on a case-by-case basis.

(e) *Basic model compliance*. (1) DOE will evaluate whether a basic model complies with the applicable energy conservation standard(s) based on testing conducted in accordance with the applicable test procedures specified in parts 430 and 431, and with the following statistical sampling procedures:

(i) For products with applicable energy conservation standard(s) in §430.32, and commercial pre-rinse spray valves, illuminated exit signs, traffic signal modules and pedestrian modules, commercial clothes washers, and metal halide lamp ballasts, DOE will use a sample size of not more than 21 units and follow the sampling plans in appendix A of this subpart (Sampling for Enforcement Testing of Covered Consumer Products and Certain High-Volume Commercial Equipment).

(ii) For automatic commercial ice makers; commercial refrigerators, freezers, and refrigerator-freezers; refrigerated bottled or canned vending machines; and commercial HVAC and WH equipment, DOE will use an initial sample size of not more than four units and follow the sampling plans in appendix B of this subpart (Sampling Plan for Enforcement Testing of Covered Equipment and Certain Low-Volume Covered Products). If fewer than four units of a basic model are available for testing when the manufacturer receives the notice, then:

(A) DOE will test the available unit(s); or

(B) If one or more other units of the basic model are expected to become available within 30 calendar days, DOE may instead, at its discretion, test either:

(*1*) The available unit(s) and one or more of the other units that subsequently become available (up to a maximum of four); or

(*2*) Up to four of the other units that subsequently become available.

(iii) For distribution transformers, DOE will use an initial sample size of not more than five units and follow the sampling plans in appendix C of this subpart (Sampling Plan for Enforcement Testing of Distribution Transformers). If fewer than five units of a basic model are available for testing when the manufacturer receives the test notice, then:

(A) DOE will test the available unit(s); or

(B) If one or more other units of the basic model are expected to become available within 30 calendar days, the Department may instead, at its discretion, test either:

(*1*) The available unit(s) and one or more of the other units that subsequently become available (up to a maximum of five); or

(*2*) Up to five of the other units that subsequently become available.

(iv) Notwithstanding paragraphs (e)(1)(i) through (e)(1)(iii) of this section, if testing of the available or subsequently available units of a basic model would be impractical, as for example when a basic model has unusual testing requirements or has limited production, DOE may in its discretion decide to base the determination of compliance on the testing of fewer than the otherwise required number of units.

(v) When DOE makes a determination in accordance with section (e)(1)(iv) to test less than the number of units specified in parts (d)(1)(i) through (d)(1)(iii) of this section, DOE will base the compliance determination on the results of such testing in accordance with appendix B of this subpart (Sampling Plan for Enforcement Testing of Covered Equipment and Certain Low-Volume Covered Products) using a sample size (n_1) equal to the number of units tested.

(vi) For the purposes of paragraphs (e)(1)(i) through (e)(1)(v) of this section, available units are those that are available for distribution in commerce within the United States.

§ 429.114 Notice of noncompliance and notice to cease distribution of a basic model.

(a) In the event that DOE determines a basic model is noncompliant with an applicable energy conservation standard, or if a manufacturer or private labeler determines a basic model to be in noncompliance, DOE may issue a notice of noncompliance determination to the manufacturer or private labeler. This notice of noncompliance determination will notify the manufacturer or private labeler of its obligation to:

(1) Immediately cease distribution in commerce of the basic model;

(2) Give immediate written notification of the determination of noncompliance to all persons to whom the manufacturer has distributed units of the basic model manufactured since the date of the last determination of compliance; and

(3) Provide DOE, within 30 calendar days of the request, records, reports and other documentation pertaining to the acquisition, ordering, storage, shipment, or sale of a basic model determined to be in noncompliance.

(b) In the event that DOE determines a manufacturer has failed to comply with an applicable certification requirement with respect to a particular basic model, DOE may issue a notice of noncompliance determination to the manufacturer or private labeler. This notice of noncompliance determination will notify the manufacturer or private labeler of its obligation to:

(1) Immediately cease distribution in commerce of the basic model;

(2) Immediately comply with the applicable certification requirement; and/or

(3) Provide DOE within 30 days of the request, records, reports and other documentation pertaining to the acquisition, ordering, storage, shipment, or sale of the basic model.

(c) If a manufacturer or private labeler fails to comply with the required actions in the notice of noncompliance determination as set forth in paragraphs (a) or (b) of this section, the General Counsel (or delegee) may seek, among other remedies, injunctive action and civil penalties, where appropriate.

(d) The manufacturer may modify a basic model determined to be noncompliant with an applicable energy conservation standard in such manner as to make it comply with the applicable standard. Such modified basic model shall then be treated as a new basic model and must be certified in accordance with the provisions of this part; except that in addition to satisfying all requirements of this part, any models within the basic model must be assigned new model numbers and the manufacturer shall also maintain, and provide upon request to DOE, records that demonstrate that modifications have been made to all units of the new basic model prior to distribution in commerce.

§ 429.116 Additional certification testing requirements.

Pursuant to § 429.102(b)(2), if DOE determines that independent, third-party testing is necessary to ensure a manufacturer's compliance with the rules of this part, part 430, or part 431, a manufacturer must base its certification of a basic model under subpart B of this part on independent, third-party laboratory testing.

§ 429.118 Injunctions.

If DOE has reason to seek an injunction under the Act:

(a) DOE will notify the manufacturer, private labeler or any other person as required, of the prohibited act at issue and DOE's intent to seek a judicial order enjoining the prohibited act unless the manufacturer, private labeler or other person, delivers to DOE within 15 calendar days a corrective action and compliance plan, satisfactory to DOE, of the steps it will take to ensure that the prohibited act ceases. DOE will monitor the implementation of such plan.

(b) If the manufacturer, private labeler or any other person as required, fails to cease engaging in the prohibited act or fails to provide a satisfactory corrective action and compliance plan, DOE may seek an injunction.

§ 429.120 Maximum civil penalty.

Any person who knowingly violates any provision of § 429.102(a) of this part may be subject to assessment of a civil penalty of no more than $200 for each violation. As to § 429.102(a)(1) with respect to failure to certify, and as to § 429.102(a)(2), (5) through (9), each unit of a covered product or covered equipment distributed in violation of such paragraph shall constitute a separate violation. For violations of § 429.102(a)(1), (3), and (4), each day of noncompliance shall constitute a separate violation for each basic model at issue.

§ 429.122 Notice of proposed civil penalty.

(a) The General Counsel (or delegee) shall provide notice of any proposed civil penalty.

(b) The notice of proposed penalty shall:

(1) Include the amount of the proposed penalty;

(2) Include a statement of the material facts constituting the alleged violation; and

(3) Inform the person of the opportunity to elect in writing within 30 calendar days of receipt of the notice to have the procedures of § 429.128 (in lieu of those of § 429.126) apply with respect to the penalty.

§ 429.124 Election of procedures.

(a) In responding to a notice of proposed civil penalty, the respondent may request:

(1) An administrative hearing before an Administrative Law Judge (ALJ) under § 429.126 of this part; or

(2) Elect to have the procedures of § 429.128 apply.

(b) Any election to have the procedures of § 429.128 apply may not be revoked except with the consent of the General Counsel (or delegee).

(c) If the respondent fails to respond to a notice issued under § 429.120 or otherwise fails to indicate its election of procedures, DOE shall refer the civil penalty action to an ALJ for a hearing under § 429.126.

§ 429.126 Administrative law judge hearing and appeal.

(a) When elected pursuant to § 429.124, DOE shall refer a civil penalty action brought under § 429.122 of this part to

an ALJ, who shall afford the respondent an opportunity for an agency hearing on the record.

(b) After consideration of all matters of record in the proceeding, the ALJ will issue a recommended decision, if appropriate, recommending a civil penalty. The decision will include a statement of the findings and conclusions, and the reasons therefore, on all material issues of fact, law, and discretion.

(c)(1) The General Counsel (or delegee) shall adopt, modify, or set aside the conclusions of law or discretion contained in the ALJ's recommended decision and shall set forth a final order assessing a civil penalty. The General Counsel (or delegee) shall include in the final order the ALJ's findings of fact and the reasons for the final agency actions.

(2) Any person against whom a penalty is assessed under this section may, within 60 calendar days after the date of the final order assessing such penalty, institute an action in the United States Court of Appeals for the appropriate judicial circuit for judicial review of such order in accordance with chapter 7 of title 5, United States Code. The court shall have jurisdiction to enter a judgment affirming, modifying, or setting aside in whole or in part, the final order, or the court may remand the proceeding to the Department for such further action as the court may direct.

§ 429.128 Immediate issuance of order assessing civil penalty.

(a) If the respondent elects to forgo an agency hearing pursuant to § 429.124, the General Counsel (or delegee) shall issue an order assessing the civil penalty proposed in the notice of proposed penalty under § 429.122, 30 calendar days after the respondent's receipt of the notice of proposed penalty.

(b) If within 60 calendar days of receiving the assessment order in paragraph (a) of this section the respondent does not pay the civil penalty amount, DOE shall institute an action in the appropriate United States District Court for an order affirming the assessment of the civil penalty. The court shall have authority to review de novo the law and the facts involved and shall have jurisdiction to enter a judgment enforcing, modifying, and enforcing as so modified, or setting aside in whole or in part, such assessment.

§ 429.130 Collection of civil penalties.

If any person fails to pay an assessment of a civil penalty after it has become a final and unappealable order under § 429.126 or after the appropriate District Court has entered final judgment in favor of the Department under § 429.128, the General Counsel (or delegee) shall institute an action to recover the amount of such penalty in any appropriate District Court of the United States. In such action, the validity and appropriateness of such final assessment order or judgment shall not be subject to review.

§ 429.132 Compromise and settlement.

(a) DOE may compromise, modify, or remit, with or without conditions, any civil penalty (with leave of court if necessary).

(b) In exercising its authority under paragraph (a) of this section, DOE may consider the nature and seriousness of the violation, the efforts of the respondent to remedy the violation in a timely manner, and other factors as justice may require.

(c) DOE's authority to compromise, modify or remit a civil penalty may be exercised at any time prior to a final decision by the United States Court of Appeals if § 429.126 procedures are utilized, or prior to a final decision by the United States District Court, if § 429.128 procedures are utilized.

(d) Notwithstanding paragraph (a) of this section, DOE or the respondent may propose to settle the case. If a settlement is agreed to by the parties, the respondent is notified and the case is closed in accordance with the terms of the settlement.

APPENDIX A TO SUBPART C OF PART 429—SAMPLING PLAN FOR ENFORCEMENT TESTING OF COVERED CONSUMER PRODUCTS AND CERTAIN HIGH-VOLUME COMMERCIAL EQUIPMENT

(a) The first sample size (n_1) for enforcement testing must be four or more units, except as provided by § 429.57(e)(1)(i).

(b) Compute the mean of the measured energy performance (x_1) for all tests as follows:

$$x_1 = \frac{1}{n_1}\left(\sum_{i=1}^{n_1} x_i\right) \qquad [1]$$

where x_i is the measured energy or water efficiency or consumption from test i, and n_1 is the total number of tests.

(c) Compute the standard deviation (s_1) of the measured energy performance from the n_1 tests as follows:

$$s_1 = \sqrt{\frac{\sum_{i=1}^{n_1}(x_i - x_1)^2}{n_1 - 1}} \qquad [2]$$

(d) Compute the standard error (s_{x1}) of the measured energy performance from the n_1 tests as follows:

$$s_{x_1} = \frac{s_1}{\sqrt{n_1}} \qquad [3]$$

(e)(1) Compute the upper control limit (UCL_1) and lower control limit (LCL_1) for the mean of the first sample using the applicable DOE energy efficiency standard (EES) as the desired mean and a probability level of 95 percent (two-tailed test) as follows:

LCL_1 EES — ts_{X1} x

$$LCL_1 = EES - ts_{x_1} \qquad [4] \text{ and } UCL_1 = EES + ts_{x_1} \qquad [5]$$

where t is the statistic based on a 95 percent two-tailed probability level with degrees of freedom ($n_1 - 1$).

(2) For an energy efficiency or water efficiency standard, compare the mean of the first sample (x_1) with the upper and lower control limits (UCL_1 and LCL_1) to determine one of the following:

(i) If the mean of the first sample is below the lower control limit, then the basic model is in noncompliance and testing is at an end. (Do not go on to any of the steps below.)

(ii) If the mean of the first sample is equal to or greater than the upper control limit, then the basic model is in compliance and testing is at an end. (Do not go on to any of the steps below.)

(iii) If the sample mean is equal to or greater than the lower control limit but less than the upper control limit, then no determination of compliance or noncompliance can be made and a second sample size is determined by Step (e)(3).

(3) For an energy efficiency or water efficiency standard, determine the second sample size (n_2) as follows:

$$n_2 = \left(\frac{ts_1}{0.05EES}\right)^2 - n_1 \qquad [6]$$

where s_1 and t have the values used in equations 2 and 4, respectively. The term ''0.05 EES'' is the difference between the applicable energy efficiency or water efficiency standard and 95 percent of the standard, where 95 percent of the standard is taken as the lower control limit. This procedure yields a sufficient combined sample size (n_1+n_2) to give an estimated 97.5 percent probability of obtaining a determination of compliance when the true mean efficiency is equal to the applicable standard. Given the solution value of n_2, determine one of the following:

(i) If the value of n_2 is less than or equal to zero and if the mean energy or water efficiency of the first sample (x_1) is either equal to or greater than the lower control limit (LCL_1) or equal to or greater than 95 percent of the applicable energy efficiency or water efficiency standard (EES), whichever is greater, *i.e.*, if $n_2 \leq 0$ and $x_1 \geq \max$ (LCL_1, 0.95 EES), the basic model is in compliance and testing is at an end.

(ii) If the value of n_2 is less than or equal to zero and the mean energy efficiency of the first sample (x_1) is less than the lower control limit (LCL_1) or less than 95 percent of the applicable energy or water efficiency standard (EES), whichever is greater, *i.e.*, if $n_2 \leq 0$ and $x_1 \leq \max$ (LCL_1, 0.95 EES), the basic model is not in compliance and testing is at an end.

(iii) If the value of n_2 is greater than zero, then, the value of the second sample size is determined to be the smallest integer equal to or greater than the solution value of n_2 for equation (6). If the value of n_2 so calculated is greater than $21 - n_1$, set n_2 equal to $21 - n_1$.

(4) Compute the combined mean (x_2) of the measured energy or water efficiency of the n_1 and n_2 units of the combined first and second samples as follows:

$$\bar{x}_2 = \frac{1}{n_1 + n_2}\left(\sum_{i=1}^{n_1+n_2} x_i\right) \qquad [7]$$

(5) Compute the standard error (S_{x2}) of the measured energy or water performance of the n_1 and n_2 units in the combined first and second samples as follows:

$$s_{x_2} = \frac{s^1}{\sqrt{n_1 + n_2}} \qquad [8]$$

NOTE: s_1 is the value obtained in Step (c).

(6) For an energy efficiency standard (EES), compute the lower control limit (LCL_2) for the mean of the combined first and second samples using the DOE EES as the desired mean and a one-tailed probability level of 97.5 percent (equivalent to the two-tailed probability level of 95 percent used in Step (e)(1)) as follows:

$$LCL_2 = EES - ts_{x_2} \qquad [9]$$

where the t-statistic has the value obtained in Step (e)(1) and s_{x2} is the value obtained in Step (e)(5).

(7) For an energy efficiency standard (EES), compare the combined sample mean (x_2) to the lower control limit (LCL_2) to determine one of the following:

(i) If the mean of the combined sample (x_2) is less than the lower control limit (LCL_2) or 95 percent of the applicable energy efficiency standard (EES), whichever is greater, *i.e.*, if x_2<max (LCL_2, 0.95 EES), the basic model is not compliant and testing is at an end.

(iii) If the mean of the combined sample (x_2) is equal to or greater than the lower control limit (LCL_2) or 95 percent of the applicable energy efficiency standard (EES), whichever is greater, *i.e.*, if x_2≥max (LCL_2, 0.95 EES), the basic model is in compliance and testing is at an end.

(f)(1) Compute the upper control limit (UCL_1) and lower control limit (LCL_1) for the mean of the first sample using the applicable DOE energy consumption standard (ECS) as the desired mean and a probability level of 95 percent (two-tailed test) as follows:

$$LCL_1 = ECS - ts_{x_1} \quad \text{and} \quad UCL_1 = ECS + ts_{x_1} \qquad [10]$$

where t is the statistic based on a 95 percent two-tailed probability level with degrees of freedom ($n_1 - 1$).

(2) For an energy or water consumption standard, compare the mean of the first sample (x_1) with the upper and lower control limits (UCL_1 and LCL_1) to determine one of the following:

(i) If the mean of the first sample is above the upper control limit, then the basic model is in noncompliance and testing is at an end. (Do not go on to any of the steps below.)

(ii) If the mean of the first sample is equal to or less than the lower control limit, then the basic model is in compliance and testing is at an end. (Do not go on to any of the steps below.)

(iii) If the sample mean is equal to or less than the upper control limit but greater than the lower control limit, then no determination of compliance or noncompliance can be made and a second sample size is determined by Step (f)(3).

(3) For an Energy or Water Consumption Standard, determine the second sample size (n_2) as follows:

$$n_2 = \left(\frac{ts_1}{0.05ECS}\right)^2 - n_1 \qquad [11]$$

where $s_1$and t have the values used in equations (2) and (10), respectively. The term ''0.05 ECS'' is the difference between the applicable energy or water consumption standard and 105 percent of the standard, where 105 percent of the standard is taken as the upper control limit. This procedure yields a sufficient combined sample size ($n_1 + n_2$) to give an estimated 97.5 percent probability of obtaining a determination of compliance when the true mean consumption is equal to the applicable standard. Given the solution value of n_2, determine one of the following:

(i) If the value of n_2 is less than or equal to zero and if the mean energy or water consumption of the first sample (x_1) is either equal to or less than the upper control limit (UCL_1) or equal to or less than 105 percent of the applicable energy or water consumption standard (ECS), whichever is less, *i.e.*, if $n_2 \leq 0$ and $x_1 \leq$min (UCL_1, 1.05 ECS), the basic model is in compliance and testing is at an end.

(ii) If the value of n_2 is less than or equal to zero and the mean energy or water consumption of the first sample (x_1) is greater than the upper control limit (UCL_1) or more than 105 percent of the applicable energy or water consumption standard (ECS), whichever is less, *i.e.*, if $n_2 \leq 0$ and x_1 >min (UCL_1, 1.05 EPS), the basic model is not compliant and testing is at an end.

(iii) If the value of n_2 is greater than zero, then the value of the second sample size is determined to be the smallest integer equal to or greater than the solution value of n_2 for equation (11). If the value of n_2 so calculated is greater than $21 - n_1$, set n_2 equal to $21 - n_1$.

(4) Compute the combined mean (x_2) of the measured energy or water consumption of the n_1 and n_2 units of the combined first and second samples as follows:

$$\bar{x}_2 = \frac{1}{n_1 + n_2}\left(\sum_{i=1}^{n_1+n_2} x_i\right) \qquad [12]$$

(5) Compute the standard error (S_{x2}) of the measured energy or water consumption of the n_1 and n_2 units in the combined first and second samples as follows:

$$s_{x_2} = \frac{s^1}{\sqrt{n_1 + n_2}} \qquad [13]$$

NOTE: s_1 is the value obtained in Step (c).

(6) For an energy or water consumption standard (ECS), compute the upper control limit (UCL_2) for the mean of the combined first and second samples using the DOE ECS as the desired mean and a one-tailed probability level of 97.5 percent (equivalent to the two-tailed probability level of 95 percent used in Step (f)(1)) as follows:

$$UCL_1 = ECS + ts_{x_1} \qquad [14]$$

where the t-statistic has the value obtained in (f)(1).

(7) For an energy or water consumption standard (ECS), compare the combined sample mean (x_2) to the upper control limit (UCL_2) to determine one of the following:

(i) If the mean of the combined sample (x_2) is greater than the upper control limit (UCL_2) or 105 percent of the ECS whichever is less, *i.e.*, if x_2 >min (UCL_2, 1.05 ECS), the basic model is not compliant and testing is at an end.

(ii) If the mean of the combined sample (x_2) is equal to or less than the upper control limit (UCL_2) or 105 percent of the applicable energy or water performance standard (ECS), whichever is less, *i.e.*, if $x_2 \leq$min (UCL_2, 1.05 ECS), the basic model is in compliance and testing is at an end.

APPENDIX B TO SUBPART C OF PART 429—SAMPLING PLAN FOR ENFORCEMENT TESTING OF COVERED EQUIPMENT AND CERTAIN LOW-VOLUME COVERED PRODUCTS

The Department will determine compliance as follows:

(a) The first sample size (n_1) must be four or more units, except as provided by § 429.57(e)(1)(ii).

(b) Compute the mean of the measured energy performance (x_1) for all tests as follows:

$$x_1 = \frac{1}{n_1}\left(\sum_{i=1}^{n_1} x_i\right) \qquad [1]$$

where x_i is the measured energy efficiency or consumption from test i, and n_1 is the total number of tests.

(c) Compute the standard deviation (s_1) of the measured energy performance from the n_1 tests as follows:

$$s_1 = \sqrt{\frac{\sum_{i=1}^{n_1}(x_i - x_1)^2}{n_1 - 1}} \qquad [2]$$

(d) Compute the standard error (s_{x1}) of the measured energy performance from the n_1 tests as follows:

$$s_{x_1} = \frac{s_1}{\sqrt{n_1}} \qquad [3]$$

(e)(1) For an energy efficiency standard (EES), determine the appropriate lower control limit (LCL_1) according to:

$$LCL_1 = EES - ts_{x_1} \qquad [4a]$$

or

$$LCL_1 = 0.95EES, \qquad [4b]$$

And use whichever is greater. Where EES is the energy efficiency standard and t is a statistic based on a 97.5 percent, one-sided confidence limit and a sample size of n_1.

(2) For an energy consumption standard (ECS), determine the appropriate upper control limit (UCL_1) according to:

$$UCL_1 = ECS + ts_{x_1} \qquad [5a]$$

or

$$UCL_1 = 1.05ECS, \qquad [5b]$$

And use whichever is less, where ECS is the energy consumption standard and t is a statistic based on a 97.5 percent, one-sided confidence limit and a sample size of n_1.

(f)(1) Compare the sample mean to the control limit.

(i) The basic model is in compliance and testing is at an end if:

(A) For an energy or water efficiency standard, the sample mean is equal to or greater than the lower control limit, or

(B) For an energy or water consumption standard, the sample mean is equal to or less than the upper control limit.

APPENDIX C TO SUBPART C OF PART 429—SAMPLING PLAN FOR ENFORCEMENT TESTING OF DISTRIBUTION TRANSFORMERS

(a) When testing distribution transformers, the number of units in the sample (m_1) shall be in accordance with §429.47(a) and DOE shall perform the following number of tests:

(1) If DOE tests four or more units, it will test each unit once;

(2) If DOE tests two or three units, it will test each unit twice; or

(3) If DOE tests one unit, it will test that unit four times.

(b) DOE shall determine compliance as follows:

(1) Compute the mean (X_1) of the measured energy performance of the n_1 tests in the first sample as follows:

$$X_1 = \frac{1}{n_1}\sum_{i=1}^{n_1} X_i \qquad [1]$$

where X_i is the measured efficiency of test i.

(2) Compute the sample standard deviation (S_1) of the measured efficiency of the n_1 tests in the first sample as follows:

$$S_1 = \sqrt{\sum_{i=1}^{n_1} \frac{(X_i - X_1)^2}{n_1 - 1}} \qquad [2]$$

(3) Compute the standard error ($SE(X_1)$) of the mean efficiency of the first sample as follows:

$$SE(X_1) = \frac{S_1}{\sqrt{n_1}} \qquad [3]$$

(4) Compute the sample size discount ($SSD(m_1)$) as follows:

$$SSD(m_1) = \frac{100}{1 + \left(1 + \frac{0.08}{\sqrt{m_1}}\right)\left(\frac{100}{RE} - 1\right)} \qquad [4]$$

where m_1 is the number of units in the sample, and RE is the applicable DOE efficiency when the test is to determine compliance with the applicable energy conservation standard, or is the labeled efficiency when the test is to determine compliance with the labeled efficiency value.

(5) Compute the lower control limit (LCL_1) for the mean of

$$LCL_1 = SSD(m_1) - tSE(\bar{X}_1) \qquad [5]$$

Where t is statistic based on a 97.5 percent one-tailed t test with degrees of freedom (from Appendix A) $n_1 - 1$.

(6) Compare the mean of the first sample (X_1) with the lower control limit (LCL_1) to determine one of the following:

(i) If the mean of the first sample is below the lower control limit, then the basic model is not compliant and testing is at an end.

(ii) If the mean is equal to or greater than the lower control limit, no final determination of compliance or noncompliance can be made; proceed to Step (7).

(7) Determine the recommended sample size (n) as follows:

$$n = \left[\frac{tS_1(108 - 0.08RE)}{RE(8 - 0.08RE)}\right]^2 \qquad [6]$$

Given the value of n, determine one of the following:

(i) If the value of n is less than or equal to n_1 and if the mean energy efficiency of the first sample (X_1) is equal to or greater than the lower control limit (LCL_1), the basic model is in compliance and testing is at an end.

(ii) If the value of n is greater than n_1, the basic model is not compliant. The size of a second sample n_2 is determined to be the smallest integer equal to or greater than the difference $n - n_1$. If the value of n_2 so calculated is greater than $21 - n_1$, set n_2 equal to $21 - n_1$.

(8) Compute the combined (X_2) mean of the measured energy performance of the n_1 and n_2 units of the combined first and second samples as follows:

$$\bar{X}_2 = \frac{1}{n_1 + n_2} \sum_{i=1}^{n_1+n_2} X_i \qquad [7]$$

(9) Compute the standard error ($SE(X_2)$) of the mean full-load efficiency of the n_1 and n_2 units in the combined first and second samples as follows:

$$SE(\bar{X}_2) = \frac{S_1}{\sqrt{n_1 + n_2}} \qquad [8]$$

(Note that S_1 is the value obtained above in (2).)

(10) Set the lower control limit (LCL_2) to,

$$LCL_2 = SSD(m_1) - tSE(\bar{X}_2) \qquad [9]$$

where t has the value obtained in (5) and $SSD(m_1)$ is sample size discount determined in (4), and compare the combined sample mean (X_2) to the lower control limit (LCL_2) to determine one of the following:

(i) If the mean of the combined sample (X_2) is less than the lower control limit (LCL_2), the basic model is not compliant and testing is at an end.

(ii) If the mean of the combined sample (X_2) is equal to or greater than the lower control limit (LCL_2), the basic model is in compliance and testing is at an end.

[76 FR 12451, Mar. 7, 2011; 76 FR 24781, May 2, 2011]

PART 430—ENERGY CONSERVATION PROGRAM FOR CONSUMER PRODUCTS

Subpart A—General Provisions

Sec.
430.1 Purpose and scope.
430.2 Definitions.
430.3 Materials incorporated by reference.
430.4 Sources for information and guidance.

Subpart B—Test Procedures

430.21 Purpose and scope.
430.23 Test procedures for the measurement of energy and water consumption.
430.24 [Reserved]
430.25 Laboratory Accreditation Program.
430.27 Petitions for waiver and applications for interim waiver.
APPENDIX A TO SUBPART B OF PART 430—UNIFORM TEST METHOD FOR MEASURING THE ENERGY CONSUMPTION OF ELECTRIC REFRIGERATORS AND ELECTRIC REFRIGERATOR-FREEZERS
APPENDIX A1 TO SUBPART B OF PART 430—UNIFORM TEST METHOD FOR MEASURING THE ENERGY CONSUMPTION OF ELECTRIC REFRIGERATORS AND ELECTRIC REFRIGERATOR-FREEZERS
APPENDIX B TO SUBPART B OF PART 430—UNIFORM TEST METHOD FOR MEASURING THE ENERGY CONSUMPTION OF FREEZERS
APPENDIX B1 (ALTERNATIVE) TO SUBPART B OF PART 430—UNIFORM TEST METHOD FOR MEASURING THE ENERGY CONSUMPTION OF FREEZERS
APPENDIX C TO SUBPART B OF PART 430—UNIFORM TEST METHOD FOR MEASURING THE ENERGY CONSUMPTION OF DISHWASHERS
APPENDIX C1 TO SUBPART B OF PART 430—UNIFORM TEST METHOD FOR MEASURING THE ENERGY CONSUMPTION OF DISHWASHERS
APPENDIX D TO SUBPART B OF PART 430—UNIFORM TEST METHOD FOR MEASURING THE ENERGY CONSUMPTION OF CLOTHES DRYERS
APPENDIX D1 TO SUBPART B OF PART 430—UNIFORM TEST METHOD FOR MEASURING THE ENERGY CONSUMPTION OF CLOTHES DRYERS
APPENDIX D2 TO SUBPART B OF PART 430—UNIFORM TEST METHOD FOR MEASURING THE ENERGY CONSUMPTION OF CLOTHES DRYERS
APPENDIX E TO SUBPART B OF PART 430—UNIFORM TEST METHOD FOR MEASURING THE ENERGY CONSUMPTION OF WATER HEATERS
APPENDIX F TO SUBPART B OF PART 430—UNIFORM TEST METHOD FOR MEASURING THE ENERGY CONSUMPTION OF ROOM AIR CONDITIONERS
APPENDIX G TO SUBPART B OF PART 430—UNIFORM TEST METHOD FOR MEASURING THE ENERGY CONSUMPTION OF UNVENTED HOME HEATING EQUIPMENT
APPENDIX H TO SUBPART B OF PART 430—UNIFORM TEST METHOD FOR MEASURING THE POWER CONSUMPTION OF TELEVISION SETS
APPENDIX I TO SUBPART B OF PART 430—UNIFORM TEST METHOD FOR MEASURING THE ENERGY CONSUMPTION OF CONVENTIONAL RANGES, CONVENTIONAL COOKING TOPS, CONVENTIONAL OVENS, AND MICROWAVE OVENS
APPENDIX J1 TO SUBPART B OF PART 430—UNIFORM TEST METHOD FOR MEASURING THE ENERGY CONSUMPTION OF AUTOMATIC AND SEMI-AUTOMATIC CLOTHES WASHERS
APPENDIX J2 TO SUBPART B OF PART 430—UNIFORM TEST METHOD FOR MEASURING THE ENERGY CONSUMPTION OF AUTOMATIC AND SEMI-AUTOMATIC CLOTHES WASHERS
APPENDIXES K–L TO SUBPART B OF PART 430 [RESERVED]
APPENDIX M TO SUBPART B OF PART 430—UNIFORM TEST METHOD FOR MEASURING THE ENERGY CONSUMPTION OF CENTRAL AIR CONDITIONERS
APPENDIX N TO SUBPART B OF PART 430—UNIFORM TEST METHOD FOR MEASURING THE ENERGY CONSUMPTION OF FURNACES AND BOILERS
APPENDIX O TO SUBPART B OF PART 430—UNIFORM TEST METHOD FOR MEASURING THE ENERGY CONSUMPTION OF VENTED HOME HEATING EQUIPMENT
APPENDIX P TO SUBPART B OF PART 430—UNIFORM TEST METHOD FOR MEASURING THE ENERGY CONSUMPTION OF POOL HEATERS
APPENDIX Q TO SUBPART B OF PART 430—UNIFORM TEST METHOD FOR MEASURING THE ENERGY CONSUMPTION OF FLUORESCENT LAMP BALLASTS

APPENDIX Q1 TO SUBPART B OF PART 430—UNIFORM TEST METHOD FOR MEASURING THE ENERGY CONSUMPTION OF FLUORESCENT LAMP BALLASTS
APPENDIX R TO SUBPART B OF PART 430—UNIFORM TEST METHOD FOR MEASURING AVERAGE LAMP EFFICACY (LE), COLOR RENDERING INDEX (CRI), AND CORRELATED COLOR TEMPERATURE (CCT) OF ELECTRIC LAMPS
APPENDIX S TO SUBPART B OF PART 430—UNIFORM TEST METHOD FOR MEASURING THE WATER CONSUMPTION OF FAUCETS AND SHOWERHEADS
APPENDIX T TO SUBPART B OF PART 430—UNIFORM TEST METHOD FOR MEASURING THE WATER CONSUMPTION OF WATER CLOSETS AND URINALS
APPENDIX U TO SUBPART B OF PART 430—UNIFORM TEST METHOD FOR MEASURING THE ENERGY CONSUMPTION OF CEILING FANS
APPENDIX V TO SUBPART B OF PART 430—UNIFORM TEST METHOD FOR MEASURING THE ENERGY CONSUMPTION OF CEILING FAN LIGHT KITS
APPENDIX W TO SUBPART B OF PART 430—UNIFORM TEST METHOD FOR MEASURING THE ENERGY CONSUMPTION OF MEDIUM BASE COMPACT FLUORESCENT LAMPS
APPENDIX X TO SUBPART B OF PART 430—UNIFORM TEST METHOD FOR MEASURING THE ENERGY CONSUMPTION OF DEHUMIDIFIERS
APPENDIX X1 TO SUBPART B OF PART 430—UNIFORM TEST METHOD FOR MEASURING THE ENERGY CONSUMPTION OF DEHUMIDIFIERS
APPENDIX Y TO SUBPART B OF PART 430—UNIFORM TEST METHOD FOR MEASURING THE ENERGY CONSUMPTION OF BATTERY CHARGERS
APPENDIX Z TO SUBPART B OF PART 430—UNIFORM TEST METHOD FOR MEASURING THE ENERGY CONSUMPTION OF EXTERNAL POWER SUPPLIES

Subpart C—Energy and Water Conservation Standards

430.31 Purpose and scope.
430.32 Energy and water conservation standards and their compliance dates.
430.33 Preemption of State regulations.
430.34 Energy and water conservation standards amendments.
430.35 Petitions with respect to general service lamps.
APPENDIX A TO SUBPART C OF PART 430—PROCEDURES, INTERPRETATIONS AND POLICIES FOR CONSIDERATION OF NEW OR REVISED ENERGY CONSERVATION STANDARDS FOR CONSUMER PRODUCTS

Subpart D—Petitions To Exempt State Regulation From Preemption; Petitions To Withdraw Exemption of State Regulation

430.40 Purpose and scope.
430.41 Prescriptions of a rule.
430.42 Filing requirements.
430.43 Notice of petition.
430.44 Consolidation.
430.45 Hearing.
430.46 Disposition of petitions.
430.47 Effective dates of final rules.
430.48 Request for reconsideration.
430.49 Finality of decision.

Subpart E—Small Business Exemptions

430.50 Purpose and scope.
430.51 Eligibility.
430.52 Requirements for applications.
430.53 Processing of applications.
430.54 Referral to the Attorney General.
430.55 Evaluation of application.
430.56 Decision and order.
430.57 Duration of temporary exemption.

Subpart F [Reserved]

430.60–430.75 [Reserved]
APPENDIXES A–B TO SUBPART F OF PART 430 [RESERVED]

AUTHORITY: 42 U.S.C. 6291–6309; 28 U.S.C. 2461 note.

SOURCE: 42 FR 27898, June 1, 1977, unless otherwise noted.

Subpart A—General Provisions

§ 430.1 Purpose and scope.

This part establishes the regulations for the implementation of part B of title III (42 U.S.C. 6291–6309) of the Energy Policy and Conservation Act (Pub. L. 94–163), as amended by Pub. L. 95–619, Pub. L. 100–12, Pub. L. 100–357, and Pub. L. 102–486 which establishes an energy conservation program for consumer products other than automobiles.

[62 FR 29237, May 29, 1997]

§ 430.2 Definitions.

For purposes of this part, words shall be defined as provided for in section 321 of the Act and as follows—

3-Way incandescent lamp means an incandescent lamp that—

(1) Employs two filaments, operated separately and in combination, to provide three light levels; and

(2) Is designated on the lamp packaging and marketing materials as being a 3-way incandescent lamp.

Act means the Energy Policy and Conservation Act of 1975, as amended, 42 U.S.C. 6291–6316.

Active mode means the condition in which an energy-using product—

(1) Is connected to a main power source;

(2) Has been activated; and

(3) Provides one or more main functions.

Annual fuel utilization efficiency means the efficiency descriptor for furnaces and boilers, determined using test procedures prescribed under section 323 and based on the assumption that all—

(a) Weatherized warm air furnaces or boilers are located out-of-doors;

(b) Warm air furnaces which are not weatherized are located indoors and all combustion and ventilation air is admitted through grill or ducts from the outdoors and does not communicate with air in the conditioned space;

(c) Boilers which are not weatherized are located within the heated space.

ANSI means the American National Standards Institute.

Appliance lamp means any lamp that—

(1) Is specifically designed to operate in a household appliance and has a maximum wattage of 40 watts (including an oven lamp, refrigerator lamp, and vacuum cleaner lamp); and

(2) When sold at retail, is designated and marketed for the intended application, with

(i) The designation on the lamp packaging; and

(ii) Marketing materials that identify the lamp as being for appliance use.

ARM/simulation adjustment factor means a factor used as part of a DOE-approved alternative rating method (ARM) to improve the accuracy of the calculated ratings for untested split-system central air conditioners or heat pumps. The adjustment factor associated with each outdoor unit must be set such that it reduces the difference between the SEER (HSPF) determined using the ARM and a split-system combination tested in accordance with § 430.24(m)(1). The ARM/simulation adjustment factor is an integral part of the ARM and must be a DOE-approved element in accordance with 10 CFR 430.24(m)(4) to (m)(6).

ASME means the American Society of Mechanical Engineers.

Automatic clothes washer means a class of clothes washer which has a control system which is capable of scheduling a preselected combination of operations, such as regulation of water temperature, regulation of the water fill level, and performance of wash, rinse, drain, and spin functions without the need for user intervention subsequent to the initiation of machine operation. Some models may require user intervention to initiate these different segments of the cycle after the machine has begun operation, but they do not require the user to intervene to regulate the water temperature by adjusting the external water faucet valves.

Ballast means a device used with an electric discharge lamp to obtain necessary circuit conditions (voltage, current, and waveform) for starting and operating.

Ballast efficacy factor means the relative light output divided by the power input of a fluorescent lamp ballast, as measured under test conditions specified in ANSI Standard C82.2–1984.

Ballast luminous efficiency means the total fluorescent lamp arc power divided by the fluorescent lamp ballast input power multiplied by the appropriate frequency adjustment factor, as defined in Appendix Q1 of subpart B of this part.

Baseboard electric heater means an electric heater which is intended to be recessed in or surface mounted on walls at floor level, which is characterized by long, low physical dimensions, and which transfers heat by natural convection and/or radiation.

Basic model means all units of a given type of covered product (or class thereof) manufactured by one manufacturer, having the same primary energy source, and which have essentially identical electrical, physical, and functional (or hydraulic) characteristics that affect energy consumption, energy efficiency, water consumption, or water efficiency; and

(1) With respect to general service fluorescent lamps, general service incandescent lamps, and incandescent reflector lamps: Lamps that have essentially identical light output and electrical characteristics—including

lumens per watt (lm/W) and color rendering index (CRI).

(2) With respect to faucets and showerheads: Have the identical flow control mechanism attached to or installed within the fixture fittings, or the identical water-passage design features that use the same path of water in the highest flow mode.

Batch means a collection of production units of a basic model from which a batch sample is selected.

Batch sample means the collection of units of the same basic model from which test units are selected.

Batch sample size means the number of units in a batch sample.

Batch size means the number of units in a batch.

Battery charger means a device that charges batteries for consumer products, including battery chargers embedded in other consumer products.

Blowout toilet means a water closet that uses a non-siphonic bowl with an integral flushing rim, a trap at the rear of the bowl, and a visible or concealed jet that operates with a blowout action.

BPAR incandescent reflector lamp means a reflector lamp as shown in figure C78.21–278 on page 32 of ANSI C78.21–2003 (incorporated by reference; *see* § 430.3).

BR30 means a BR incandescent reflector lamp with a diameter of 30/8ths of an inch.

BR40 means a BR incandescent reflector lamp with a diameter of 40/8ths of an inch.

BR incandescent reflector lamp means a reflector lamp that has—

(1) A bulged section below the major diameter of the bulb and above the approximate baseline of the bulb, as shown in figure 1 (RB) on page 7 of ANSI C79.1–1994, (incorporated by reference, see § 430.3); and

(2) A finished size and shape shown in ANSI C78.21–1989 (incorporated by reference; see § 430.3), including the referenced reflective characteristics in part 7 of ANSI C78.21–1989.

BR incandescent reflector lamp means a reflector lamp that has a bulged section below the bulb's major diameter and above its approximate base line as shown in Figure 1 (RB) on page 7 of ANSI C79.1–1994. A BR30 lamp has a lamp wattage of 85 or less than 66 and a BR40 lamp has a lamp wattage of 120 or less.

Btu means British thermal unit, which is the quantity of heat required to raise the temperature of one pound of water one degree Fahrenheit.

Built-in refrigerator/refrigerator-freezer/freezer means any refrigerator, refrigerator-freezer or freezer with 7.75 cubic feet or greater total volume and 24 inches or less depth not including doors, handles, and custom front panels; with sides which are not finished and not designed to be visible after installation; and that is designed, intended, and marketed exclusively (1) To be installed totally encased by cabinetry or panels that are attached during installation, (2) to be securely fastened to adjacent cabinetry, walls or floor, and (3) to either be equipped with an integral factory-finished face or accept a custom front panel.

Candelabra base incandescent lamp means a lamp that uses a candelabra screw base as described in ANSI C81.61, Specifications for Electric Bases, common designations E11 and E12 (incorporated by reference; see § 430.3).

Casement-only means a room air conditioner designed for mounting in a casement window with an encased assembly with a width of 14.8 inches or less and a height of 11.2 inches or less.

Casement-slider means a room air conditioner with an encased assembly designed for mounting in a sliding or casement window with a width of 15.5 inches or less.

Ceiling electric heater means an electric heater which is intended to be recessed in, surface mounted on, or hung from a ceiling, and which transfers heat by radiation and/or convection (either natural or forced).

Ceiling fan means a nonportable device that is suspended from a ceiling for circulating air via the rotation of fan blades.

Ceiling fan light kit means equipment designed to provide light from a ceiling fan that can be—

(1) Integral, such that the equipment is attached to the ceiling fan prior to the time of retail sale; or

(2) Attachable, such that at the time of retail sale the equipment is not physically attached to the ceiling fan,

but may be included inside the ceiling fan at the time of sale or sold separately for subsequent attachment to the fan.

Central air conditioner means a product, other than a packaged terminal air conditioner, which is powered by single phase electric current, air cooled, rated below 65,000 Btu per hour, not contained within the same cabinet as a furnace, the rated capacity of which is above 225,000 Btu per hour, and is a heat pump or a cooling unit only.

Central system humidifier means a class of humidifier designed to add moisture into the air stream of a heating system.

Class A external power supply—

(1) Means a device that—

(i) Is designed to convert line voltage AC input into lower voltage AC or DC output;

(ii) Is able to convert to only one AC or DC output voltage at a time;

(iii) Is sold with, or intended to be used with, a separate end-use product that constitutes the primary load;

(iv) Is contained in a separate physical enclosure from the end-use product;

(v) Is connected to the end-use product via a removable or hard-wired male/female electrical connection, cable, cord, or other wiring; and

(vi) Has nameplate output power that is less than or equal to 250 watts;

(2) But, does not include any device that—

(i) Requires Federal Food and Drug Administration listing and approval as a medical device in accordance with section 513 of the Federal Food, Drug, and Cosmetic Act (21 U.S.C. 360(c)); or

(ii) Powers the charger of a detachable battery pack or charges the battery of a product that is fully or primarily motor operated.

Clothes washer means a consumer product designed to clean clothes, utilizing a water solution of soap and/or detergent and mechanical agitation or other movement, and must be one of the following classes: automatic clothes washers, semi-automatic clothes washers, and other clothes washers.

Coil family means a group of coils with the same basic design features that affect the heat exchanger performance. These features are the basic configuration, i.e., A-shape, V-shape, slanted or flat top, the heat transfer surfaces on refrigerant and air sides (flat tubes vs. grooved tubes, fin shapes), the tube and fin materials, and the coil circuitry. When a group of coils has all these features in common, it constitutes a ''coil family.''

Cold temperature fluorescent lamp means a fluorescent lamp specifically designed to start at −20 °F when used with a ballast conforming to the requirements of ANSI C78.81 (incorporated by reference; see § 430.3) and ANSI C78.901 (incorporated by reference; see § 430.3), and is expressly designated as a cold temperature lamp both in markings on the lamp and in marketing materials, including catalogs, sales literature, and promotional material.

Colored fluorescent lamp means a fluorescent lamp designated and marketed as a colored lamp and not designed or marketed for general illumination applications with either of the following characteristics:

Component video means a video display interface as defined in the Consumer Electronics Association's (CEA) standard, CEA–770.3–D (incorporated by reference; see § 430.3).

Composite video means a video display interface that uses Radio Corporation of America (RCA) connections carrying a signal defined by the Society of Motion Picture and Television Engineers' (SMPTE) standard, SMPTE 170M–2004 (incorporated by reference; see § 430.3) for regions that support a power frequency of 59.94 Hz or International Telecommunication Union's (ITU) standard, ITU–R BT 470–6 (incorporated by reference; see § 430.3) for regions that support a power frequency of 50 Hz.

(1) A CRI less than 40, as determined according to the method set forth in CIE Publication 13.3 (incorporated by reference; *see* § 430.3); or

(2) A correlated color temperature less than 2,500K or greater than 7,000K as determined according to the method set forth in IES LM–9 (incorporated by reference; *see* § 430.3).

Colored incandescent lamp means an incandescent lamp designated and marketed as a colored lamp that has—

(1) A color rendering index of less than 50, as determined according to the test method given in CIE 13.3 (incorporated by reference; see § 430.3); or

(2) A correlated color temperature of less than 2,500K, or greater than 4,600K, where correlated temperature is computed according to the ''Computation of Correlated Color Temperature and Distribution Temperature,'' Journal of the Optical Society of America, (incorporated by reference; see § 430.3).

Color Rendering Index or CRI means the measured degree of color shift objects undergo when illuminated by a light source as compared with the color of those same objects when illuminated by a reference source of comparable color temperature.

Compact refrigerator/refrigerator-freezer/freezer means any refrigerator, refrigerator-freezer or freezer with total volume less than 7.75 cubic foot (220 liters) (rated volume as determined in appendices A1 and B1 of subpart B of this part before appendices A and B become mandatory and as determined in appendices A and B of this subpart once appendices A and B become mandatory (see the notes at the beginning of appendices A and B)).

Condenser-evaporator coil combination means a condensing unit made by one manufacturer and one of several evaporator coils, either manufactured by the same manufacturer or another manufacturer, intended to be combined with that particular condensing unit.

Condensing unit means a component of a central air conditioner which is designed to remove the heat absorbed by the refrigerant and to transfer it to the outside environment, and which consists of an outdoor coil, compressor(s), and air moving device.

Consumer product means any article (other than an automobile, as defined in Section 501(1) of the Motor Vehicle Information and Cost Savings Act):

(1) Of a type—

(i) Which in operation consumes, or is designed to consume, energy or, with respect to showerheads, faucets, water closets, and urinals, water; and

(ii) Which, to any significant extent, is distributed in commerce for personal use or consumption by individuals;

(2) Without regard to whether such article of such type is in fact distributed in commerce for personal use or consumption by an individual, except that such term includes fluorescent lamp ballasts, general service fluorescent lamps, incandescent reflector lamps, showerheads, faucets, water closets, and urinals distributed in commerce for personal or commercial use or consumption.

Convection microwave oven means a microwave oven that incorporates convection features and any other means of cooking in a single compartment.

Conventional cooking top means a class of kitchen ranges and ovens which is a household cooking appliance consisting of a horizontal surface containing one or more surface units which include either a gas flame or electric resistance heating.

Conventional oven means a class of kitchen ranges and ovens which is a household cooking appliance consisting of one or more compartments intended for the cooking or heating of food by means of either a gas flame or electric resistance heating. It does not include portable or countertop ovens which use electric resistance heating for the cooking or heating of food and are designed for an electrical supply of approximately 120 volts.

Conventional range means a class of kitchen ranges and ovens which is a household cooking appliance consisting of a conventional cooking top and one or more conventional ovens.

Convertible cooking appliance means any kitchen range and oven which is a household cooking appliance designed by the manufacturer to be changed in service from use with natural gas to use with LP-gas, and vice versa, by incorporating in the appliance convertible orifices for the main gas burners and a convertible gas pressure regulator.

Cooking products means consumer products that are used as the major household cooking appliances. They are designed to cook or heat different types of food by one or more of the following sources of heat: gas, electricity, or microwave energy. Each product may consist of a horizontal cooking top containing one or more surface units and/or one or more heating compartments. They must be one of the following classes: conventional ranges,

conventional cooking tops, conventional ovens, microwave ovens, microwave/conventional ranges and other cooking products.

Correlated color temperature means the absolute temperature of a blackbody whose chromaticity most nearly resembles that of the light source.

Covered product means a consumer product:

(1) Of a type specified in section 322 of the Act, or

(2) That is a ceiling fan, ceiling fan light kit, medium base compact fluorescent lamp, dehumidifier, battery charger, external power supply, or torchiere.

Dehumidifier means a self-contained, electrically operated, and mechanically refrigerated encased assembly consisting of—

(1) A refrigerated surface (evaporator) that condenses moisture from the atmosphere;

(2) A refrigerating system, including an electric motor;

(3) An air-circulating fan; and

(4) Means for collecting or disposing of the condensate.

Design voltage with respect to an incandescent lamp means:

(1) The voltage marked as the intended operating voltage;

(2) The mid-point of the voltage range if the lamp is marked with a voltage range; or

(3) 120 V if the lamp is not marked with a voltage or voltage range.

Detachable battery means a battery that is—

(1) Contained in a separate enclosure from the product; and

(2) Intended to be removed or disconnected from the product for recharging.

Direct heating equipment means vented home heating equipment and unvented home heating equipment.

Direct vent system means a system supplied by a manufacturer which provides outdoor air or air from an unheated space (such as an attic or crawl space) directly to a furnace or vented heater for combustion and for draft relief if the unit is equipped with a draft control device.

Dishwasher means a cabinet-like appliance which with the aid of water and detergent, washes, rinses, and dries (when a drying process is included) dishware, glassware, eating utensils, and most cooking utensils by chemical, mechanical and/or electrical means and discharges to the plumbing drainage system.

DOE means the Department of Energy.

Dual-flush water closet means a water closet incorporating a feature that allows the user to flush the water closet with either a reduced or a full volume of water.

Electric boiler means an electrically powered furnace designed to supply low pressure steam or hot water for space heating application. A low pressure steam boiler operates at or below 15 pounds per square inch gauge (psig) steam pressure; a hot water boiler operates at or below 160 psig water pressure and 250 °F. water temperature.

Electric central furnace means a furnace designed to supply heat through a system of ducts with air as the heating medium, in which heat is generated by one or more electric resistance heating elements and the heated air is circulated by means of a fan or blower.

Electric clothes dryer means a cabinet-like appliance designed to dry fabrics in a tumble-type drum with forced air circulation. The heat source is electricity and the drum and blower(s) are driven by an electric motor(s).

Electric heater means an electric appliance in which heat is generated from electrical energy and dissipated by convection and radiation and includes baseboard electric heaters, ceiling electric heaters, floor electric heaters, portable electric heaters, and wall electric heaters.

Electric refrigerator means a cabinet designed for the refrigerated storage of food, designed to be capable of achieving storage temperatures above 32 °F (0 °C) and below 39 °F (3.9 °C), and having a source of refrigeration requiring single phase, alternating current electric energy input only. An electric refrigerator may include a compartment for the freezing and storage of food at temperatures below 32 °F (0 °C), but does not provide a separate low temperature compartment designed for the freezing and storage of food at temperatures below 8 °F (−13.3 °C).

Electric refrigerator-freezer means a cabinet which consists of two or more

compartments with at least one of the compartments designed for the refrigerated storage of food and designed to be capable of achieving storage temperatures above 32 °F (0 °C) and below 39 °F (3.9 °C), and with at least one of the compartments designed for the freezing and storage of food at temperatures below 8 °F (−13.3 °C) which may be adjusted by the user to a temperature of 0 °F (−17.8 °C) or below. The source of refrigeration requires single phase, alternating current electric energy input only.

Electromechanical hydraulic toilet means any water closet that utilizes electrically operated devices, such as, but not limited to, air compressors, pumps, solenoids, motors, or macerators in place of or to aid gravity in evacuating waste from the toilet bowl.

Electronic ballast means a device that uses semiconductors as the primary means to control lamp starting and operation.

Energy conservation standard means any standards meeting the definitions of that term in 42 U.S.C. 6291(6) and 42 U.S.C. 6311(18) as well as any other water conservation standards and design requirements found in this part or parts 430 or 431.

Energy use of a type of consumer product which is used by households means the energy consumed by such product within housing units occupied by households (such as energy for space heating and cooling, water heating, the operation of appliances, or other activities of the households), and includes energy consumed on any property that is contiguous with a housing unit and that is used primarily by the household occupying the housing unit (such as energy for exterior lights or heating a pool).

ER incandescent reflector lamp means a reflector lamp that has—

(1) An elliptical section below the major diameter of the bulb and above the approximate baseline of the bulb, as shown in figure 1 (RE) on page 7 of ANSI C79.1–1994, (incorporated by reference; see § 430.3); and

(2) A finished size and shape shown in ANSI C78.21–1989, (incorporated by reference; see § 430.3).

ER30 means an ER incandescent reflector lamp with a diameter of 30/8ths of an inch.

ER40 means an ER incandescent reflector lamp with a diameter of 40/8ths of an inch.

Estimated annual operating cost means the aggregate retail cost of the energy which is likely to be consumed annually, and in the case of showerheads, faucets, water closets, and urinals, the aggregate retail cost of water and wastewater treatment services likely to be incurred annually, in representative use of a consumer product, determined in accordance with Section 323 of EPCA (42 U.S.C. 6293).

Evaporator coil means a component of a central air conditioner which is designed to absorb heat from an enclosed space and transfer the heat to a refrigerant.

External power supply means an external power supply circuit that is used to convert household electric current into DC current or lower-voltage AC current to operate a consumer product.

External power supply design family means a set of external power supply basic models, produced by the same manufacturer, which share the same circuit layout, output power, and output cord resistance, but differ in output voltage.

Faucet means a lavatory faucet, kitchen faucet, metering faucet, or replacement aerator for a lavatory or kitchen faucet.

Fitting means a device that controls and guides the flow of water.

Floor electric heater means an electric heater which is intended to be recessed in a floor, and which transfers by radiation and/or convection (either natural or forced).

Fluorescent lamp means a low pressure mercury electric-discharge source in which a fluorescing coating transforms some of the ultraviolet energy generated by the mercury discharge into light, including only the following:

(1) Any straight-shaped lamp (commonly referred to as 4-foot medium bipin lamps) with medium bipin bases of nominal overall length of 48 inches and rated wattage of 25 or more;

(2) Any U-shaped lamp (commonly referred to as 2-foot U-shaped lamps)

with medium bipin bases of nominal overall length between 22 and 25 inches and rated wattage of 25 or more;

(3) Any rapid start lamp (commonly referred to as 8-foot high output lamps) with recessed double contact bases of nominal overall length of 96 inches;

(4) Any instant start lamp (commonly referred to as 8-foot slimline lamps) with single pin bases of nominal overall length of 96 inches and rated wattage of 52 or more;

(5) Any straight-shaped lamp (commonly referred to as 4-foot miniature bipin standard output lamps) with miniature bipin bases of nominal overall length between 45 and 48 inches and rated wattage of 26 or more; and

(6) Any straight-shaped lamp (commonly referred to 4-foot miniature bipin high output lamps) with miniature bipin bases of nominal overall length between 45 and 48 inches and rated wattage of 49 or more.

Fluorescent lamp ballast means a device which is used to start and operate fluorescent lamps by providing a starting voltage and current and limiting the current during normal operation.

Flushometer tank means a device whose function is defined in flushometer valve, but integrated within an accumulator vessel affixed and adjacent to the fixture inlet so as to cause an effective enlargement of the supply line immediately before the unit.

Flushometer valve means a valve attached to a pressurized water supply pipe and so designed that when actuated, it opens the line for direct flow into the fixture at a rate and quantity to properly operate the fixture, and then gradually closes to provide trap reseal in the fixture in order to avoid water hammer. The pipe to which this device is connected is in itself of sufficient size, that when open, will allow the device to deliver water at a sufficient rate of flow for flushing purposes.

Forced air central furnace means a gas or oil burning furnace designed to supply heat through a system of ducts with air as the heating medium. The heat generated by combustion of gas or oil is transferred to the air within a casing by conduction through heat exchange surfaces and is circulated through the duct system by means of a fan or blower.

Freezer means a cabinet designed as a unit for the freezing and storage of food at temperatures of 0 °F. or below, and having a source of refrigeration requiring single phase, alternating current electric energy input only.

Furnace means a product which utilizes only single-phase electric current, or single-phase electric current or DC current in conjunction with natural gas, propane, or home heating oil, and which—

(a) Is designed to be the principal heating source for the living space of a residence;

(b) Is not contained within the same cabinet with a central air conditioner whose rated cooling capacity is above 65,000 Btu per hour;

(c) Is an electric central furnace, electric boiler, forced-air central furnace, gravity central furnace, or low pressure steam or hot water boiler; and

(d) Has a heat input rate of less than 300,000 Btu per hour for electric boilers and low pressure steam or hot water boilers and less than 225,000 Btu per hour for forced-air central furnaces, gravity central furnaces, and electric central furnaces, gravity central furnaces, and electric central furnaces.

Gas means either natural gas or propane.

Gas clothes dryer means a cabinet-like appliance designed to dry fabrics in a tumble-type drum with forced air circulation. The heat source is gas and the drum and blower(s) are driven by an electric motor(s).

General lighting application means lighting that provides an interior or exterior area with overall illumination.

General service fluorescent lamp means any fluorescent lamp which can be used to satisfy the majority of fluorescent lighting applications, but does not include any lamp designed and marketed for the following nongeneral application:

(1) Fluorescent lamps designed to promote plant growth;

(2) Fluorescent lamps specifically designed for cold temperature applications;

(3) Colored fluorescent lamps;

(4) Impact-resistant fluorescent lamps;

(5) Reflectorized or aperture lamps;

(6) Fluorescent lamps designed for use in reprographic equipment;

(7) Lamps primarily designed to produce radiation in the ultra-violet region of the spectrum; and

(8) Lamps with a Color Rendering Index of 87 or greater.

General service incandescent lamp means a standard incandescent or halogen type lamp that is intended for general service applications; has a medium screw base; has a lumen range of not less than 310 lumens and not more than 2,600 lumens or, in the case of a modified spectrum lamp, not less than 232 lumens and not more than 1,950 lumens; and is capable of being operated at a voltage range at least partially within 110 and 130 volts; however this definition does not apply to the following incandescent lamps—

(1) An appliance lamp;

(2) A black light lamp;

(3) A bug lamp;

(4) A colored lamp;

(5) An infrared lamp;

(6) A left-hand thread lamp;

(7) A marine lamp;

(8) A marine signal service lamp;

(9) A mine service lamp;

(10) A plant light lamp;

(11) A reflector lamp;

(12) A rough service lamp;

(13) A shatter-resistant lamp (including a shatter-proof lamp and a shatter-protected lamp);

(14) A sign service lamp;

(15) A silver bowl lamp;

(16) A showcase lamp;

(17) A 3-way incandescent lamp;

(18) A traffic signal lamp;

(19) A vibration service lamp;

(20) A G shape lamp (as defined in ANSI C78.20) (incorporated by reference; *see* §430.3) and ANSI C79.1–2002 (incorporated by reference; *see* §430.3) with a diameter of 5 inches or more;

(21) A T shape lamp (as defined in ANSI C78.20) (incorporated by reference; *see* §430.3) and ANSI C79.1–2002 (incorporated by reference; *see* §430.3) and that uses not more than 40 watts or has a length of more than 10 inches; and

(22) A B, BA, CA, F, G16–1/2, G–25, G30, S, or M–14 lamp (as defined in ANSI C79.1–2002) (incorporated by reference; *see* §430.3) and ANSI C78.20 (incorporated by reference; *see* §430.3) of 40 watts or less.

General service lamp includes general service incandescent lamps, compact fluorescent lamps, general service light-emitting diode lamps, organic light-emitting diode lamps, and any other lamps that the Secretary determines are used to satisfy lighting applications traditionally served by general service incandescent lamps; however, this definition does not apply to any lighting application or bulb shape excluded from the ''general service incandescent lamp'' definition, or any general service fluorescent lamp or incandescent reflector lamp.

Gravity central furnace means a gas fueled furnace which depends primarily on natural convection for circulation of heated air and which is designed to be used in conjunction with a system of ducts.

Hand-held showerhead means a showerhead that can be held or fixed in place for the purpose of spraying water onto a bather and that is connected to a flexible hose.

Heat pump means a product, other than a packaged terminal heat pump, which consists of one or more assemblies, powered by single phase electric current, rated below 65,000 Btu per hour, utilizing an indoor conditioning coil, compressor, and refrigerant-to-outdoor air heat exchanger to provide air heating, and may also provide air cooling, dehumidifying, humidifying circulating, and air cleaning.

High-definition multimedia interface or HDMI® means an audio and video interface as defined by HDMI® Specification Informational Version 1.0 or greater (incorporated by reference; see §430.3).

Home heating equipment, not including furnaces means vented home heating equipment and unvented home heating equipment.

Household means an entity consisting of either an individual, a family, or a group of unrelated individuals, who reside in a particular housing unit. For the purpose of this definition:

(1) *Group quarters* means living quarters that are occupied by an institutional group of 10 or more unrelated

persons, such as a nursing home, military barracks, halfway house, college dormitory, fraternity or sorority house, convent, shelter, jail or correctional institution.

(2) *Housing unit* means a house, an apartment, a group of rooms, or a single room occupied as separate living quarters, but does not include group quarters.

(3) *Separate living quarters* means living quarters:

(i) To which the occupants have access either:

(A) Directly from outside of the building, or

(B) Through a common hall that is accessible to other living quarters and that does not go through someone else's living quarters, and

(ii) Occupied by one or more persons who live and eat separately from occupant(s) of other living quarters, if any, in the same building.

Immersed heating element means an electrically powered heating device which is designed to operate while totally immersed in water in such a manner that the heat generated by the device is imparted directly to the water.

Import means to import into the customs territory of the United States.

Incandescent lamp means a lamp in which light is produced by a filament heated to incandescence by an electric current, including only the following:

(1) Any lamp (commonly referred to as lower wattage non-reflector general service lamps, including any tungsten halogen lamp) that has a rated wattage between 30 and 199, has an E26 medium screw base, has a rated voltage or voltage range that lies at least partially in the range of 115 and 130 volts, and is not a reflector lamp.

(2) Any incandescent reflector lamp.

(3) Any general service incandescent lamp (commonly referred to as a high- or higher-wattage lamp) that has a rated wattage above 199 (above 205 for a high wattage reflector lamp).

Incandescent reflector lamp (commonly referred to as a reflector lamp) means any lamp in which light is produced by a filament heated to incandescence by an electric current, which: contains an inner reflective coating on the outer bulb to direct the light; is not colored; is not designed for rough or vibration service applications; is not an R20 short lamp; has an R, PAR, ER, BR, BPAR, or similar bulb shapes with an E26 medium screw base; has a rated voltage or voltage range that lies at least partially in the range of 115 and 130 volts; has a diameter that exceeds 2.25 inches; and has a rated wattage that is 40 watts or higher.

Indoor unit means a component of a split-system central air conditioner or heat pump that is designed to transfer heat between the refrigerant and the indoor air, and which consists of an indoor coil, a cooling mode expansion device, and may include an air moving device.

Intermediate base incandescent lamp means a lamp that uses an intermediate screw base as described in ANSI C81.61, Specifications for Electric Bases, common designation E17 (incorporated by reference; see § 430.3).

Kerosene means No. 1 fuel oil with a viscosity meeting the specifications as specified in UL–730–1974, section 36.9 and in tables 2 and 3 of ANSI Standard Z91.1–1972.

Lamp Efficacy (LE) means the measured lumen output of a lamp in lumens divided by the measured lamp electrical power input in watts expressed in units of lumens per watt (LPW).

Light-emitting diode or *LED* means a p-n junction solid state device of which the radiated output, either in the infrared region, the visible region, or the ultraviolet region, is a function of the physical construction, material used, and exciting current of the device.

Low consumption has the meaning given such a term in ASME A112.19.2–2008. (*see* § 430.3)

Low pressure steam or hot water boiler means an electric, gas or oil burning furnace designed to supply low pressure steam or hot water for space heating application. A low pressure steam boiler operates at or below 15 pounds psig steam pressure; a hot water boiler operates at or below 160 psig water pressure and 250 °F. water temperature.

LP-gas means liquified petroleum gas, and includes propane, butane, and propane/butane mixtures.

Major cooking component means either a conventional cooking top, a conventional oven or a microwave oven.

Manufacture means to manufacture, produce, assemble, or import.

Manufacturer means any person who manufactures a consumer product.

Medium base compact fluorescent lamp means an integrally ballasted fluorescent lamp with a medium screw base, a rated input voltage range of 115 to 130 volts and which is designed as a direct replacement for a general service incandescent lamp; however, the term does not include—

(1) Any lamp that is—

(i) Specifically designed to be used for special purpose applications; and

(ii) Unlikely to be used in general purpose applications, such as the applications described in the definition of ''General Service Incandescent Lamp'' in this section; or

(2) Any lamp not described in the definition of ''General Service Incandescent Lamp'' in this section that is excluded by the Secretary, by rule, because the lamp is—

(i) Designed for special applications; and

(ii) Unlikely to be used in general purpose applications.

Medium screw base means an Edison screw base identified with the prefix E–26 in the ''American National Standard for Electric Lamp Bases'', ANSI_IEC C81.61–2003, published by the American National Standards Institute.

Microwave/conventional cooking top means a class of kitchen ranges and ovens that is a household cooking appliance consisting of a microwave oven and a conventional cooking top.

Microwave/conventional oven means a class of kitchen ranges and ovens that is a household cooking appliance consisting of a microwave oven and a conventional oven in separate compartments.

Microwave/conventional range means a class of kitchen ranges and ovens that is a household cooking appliance consisting of a microwave oven and a conventional oven in separate compartments and a conventional cooking top.

Microwave oven means a class of kitchen ranges and ovens comprised of household cooking appliances consisting of a compartment designed to cook or heat food by means of microwave energy, including microwave ovens with or without thermal elements designed for surface browning of food and convection microwave ovens.

Mobile home furnace means a direct vent furnace that is designed for use only in mobile homes.

Modified spectrum means, with respect to an incandescent lamp, an incandescent lamp that—

(1) Is not a colored incandescent lamp; and

(2) When operated at the rated voltage and wattage of the incandescent lamp—

(A) Has a color point with (x,y) chromaticity coordinates on the C.I.E. 1931 chromaticity diagram, figure 2, page 3 of IESNA LM–16 (incorporated by reference; *see* §430.3) that lies below the black-body locus; and

(B) Has a color point with (x,y) chromaticity coordinates on the C.I.E. 1931 chromaticity diagram, figure 2, page 3 of IESNA LM–16 (incorporated by reference; *see* §430.3) that lies at least 4 MacAdam steps, as referenced in IESNA LM–16, distant from the color point of a clear lamp with the same filament and bulb shape, operated at the same rated voltage and wattage.

Natural gas means natural gas as defined by the Federal Power Commission.

Off mode means the condition in which an energy using product—

(1) Is connected to a main power source; and

(2) Is not providing any stand-by or active mode function.

Oil means heating oil grade No. 2 as defined in American Society for Testing and Materials (ASTM) D396–71.

Organic light-emitting diode or O*LED* means a thin-film light-emitting device that typically consists of a series of organic layers between 2 electrical contacts (electrodes).

Other clothes washer means a class of clothes washer which is not an automatic or semi-automatic clothes washer.

Other cooking products means any class of cooking products other than the conventional range, conventional cooking top, conventional oven, microwave oven, and microwave/conventional range classes.

Outdoor furnace or boiler is a furnace or boiler normally intended for installation out-of-doors or in an unheated

space (such as an attic or a crawl space).

Outdoor unit means a component of a split-system central air conditioner or heat pump that is designed to transfer heat between the refrigerant and the outdoor air, and which consists of an outdoor coil, compressor(s), an air moving device, and in addition for heat pumps, a heating mode expansion device, reversing valve, and defrost controls.

Packaged terminal air conditioner means a wall sleeve and a separate unencased combination of heating and cooling assemblies specified by the builder and intended for mounting through the wall. It includes a prime source of refrigeration, separable outdoor louvers, forced ventilation, and heating availability energy.

Packaged terminal heat pump means a packaged terminal air conditioner that utilizes reverse cycle refrigeration as its prime heat source and should have supplementary heating availability by builder's choice of energy.

Person includes any individual, corporation, company, association, firm, partnership, society, trust, joint venture or joint stock company, the government, and any agency of the United States or any State or political subdivision thereof.

Pin-based means (1) the base of a fluorescent lamp, that is not integrally ballasted and that has a plug-in lamp base, including multi-tube, multibend, spiral, and circline types, or (2) a socket that holds such a lamp.

Pool heater means an appliance designed for heating nonpotable water contained at atmospheric pressure, including heating water in swimming pools, spas, hot tubs and similar applications.

Portable electric heater means an electric heater which is intended to stand unsupported, and can be moved from place to place within a structure. It is connected to electric supply by means of a cord and plug, and transfers heat by radiation and/or convention (either natural or forced).

Primary heater means a heating device that is the principal source of heat for a structure and includes baseboard electric heaters, ceiling electric heaters, and wall electric heaters.

Private labeler means an owner of a brand or trademark on the label of a consumer product which bears a private label. A consumer product bears a private label if:

(1) Such product (or its container) is labeled with the brand or trademark of a person other than a manufacturer of such product;

(2) The person with whose brand or trademark such product (or container) is labeled has authorized or caused such product to be so labeled; and

(3) The brand or trademark of a manufacturer of such product does not appear on such label.

Propane means a hydrocarbon whose chemical composition is predominantly C_3H_8, whether recovered from natural gas or crude oil.

R20 incandescent reflector lamp means a reflector lamp that has a face diameter of approximately 2.5 inches, as shown in figure 1(R) on page 7 of ANSI C79.1–1994 (incorporated by reference; *see* § 430.3).

R20 short lamp means a lamp that is an R20 incandescent reflector lamp that has a rated wattage of 100 watts; has a maximum overall length of 3 and 5/8, or 3.625, inches; and is designed, labeled, and marketed specifically for pool and spa applications.

Rated lifetime for general service incandescent lamps means the length of operating time of a sample of lamps (as defined in § 429.27(a)(2)(iv) of this chapter) between first use and failure of 50 percent of the sample size in accordance with test procedures described in IESNA LM–49 (incorporated by reference; see § 430.3), as determined in section 4.2 of Appendix R of this subpart. The operating time is based on the middle lamp operating time for an odd number of samples and the average operating time of the two middle lamps for an even number of samples.

Rated voltage with respect to incandescent lamps means:

(1) The design voltage if the design voltage is 115 V, 130 V or between 115V and 130 V:

(2) 115 V if the design voltage is less than 115 V and greater than or equal to 100 V and the lamp can operate at 115 V; and

(3) 130 V if the design voltage is greater than 130 V and less than or

equal to 150 V and the lamp can operate at 130 V.

Rated wattage means:

(1) With respect to fluorescent lamps and general service fluorescent lamps:

(i) If the lamp is listed in ANSI C78.81 (incorporated by reference; *see* § 430.3) or ANSI C78.901 (incorporated by reference; *see* § 430.3), the rated wattage of a lamp determined by the lamp designation of Clause 11.1 of ANSI C78.81 or ANSI C78.901;

(ii) If the lamp is a residential straight-shaped lamp, and not listed in ANSI C78.81 (incorporated by reference; *see* § 430.3), the wattage of a lamp when operated on a reference ballast for which the lamp is designed; or

(iii) If the lamp is neither listed in one of the ANSI standards referenced in (1)(i) of this definition, nor a residential straight-shaped lamp, the electrical power of a lamp when measured according to the test procedures outlined in appendix R to subpart B of this part.

(2) With respect to general service incandescent lamps and incandescent reflector lamps, the electrical power measured according to the test procedures outlined in appendix R to subpart B of this part.

Refrigerator means an electric refrigerator.

Refrigerator-freezer means an electric refrigerator-freezer.

Replacement ballast means a ballast that—

(1) Is designed for use to replace an existing fluorescent lamp ballast in a previously installed luminaire;

(2) Is marked ''FOR REPLACEMENT USE ONLY'';

(3) Is shipped by the manufacturer in packages containing not more than 10 fluorescent lamp ballasts; and

(4) Has output leads that when fully extended are a total length that is less than the length of the lamp with which the ballast is intended to be operated.

Residential straight-shaped lamp means a low pressure mercury electric-discharge source in which a fluorescing coating transforms some of the ultraviolet energy generated by the mercury discharge into light, including a straight-shaped fluorescent lamp with medium bi-pin bases of nominal overall length of 48 inches and is either designed exclusively for residential applications; or designed primarily and marketed exclusively for residential applications.

(1) A lamp is designed exclusively for residential applications if it will not function for more than 100 hours with a commercial high-power-factor ballast.

(2) A lamp is designed primarily and marketed exclusively for residential applications if it:

(i) Is permanently and clearly marked as being for residential use only;

(ii) Has a life of 6,000 hours or less when used with a commercial high-power-factor ballast;

(iii) Is not labeled or represented as a replacement for a fluorescent lamp that is a covered product; and

(iv) Is marketed and distributed in a manner designed to minimize use of the lamp with commercial high-power-factor ballasts.

(3) A manufacturer may market and distribute a lamp in a manner designed to minimize use of the lamp with commercial high-power-factor ballasts by:

(i) Packaging and labeling the lamp in a manner that clearly indicates the lamp is for residential use only and includes appropriate instructions concerning proper and improper use; if the lamp is included in a catalog or price list that also includes commercial/industrial lamps, listing the lamp in a separate residential section accompanied by notes about proper use on the same page; and providing as part of any express warranty accompanying the lamp that improper use voids such warranty; or

(ii) Using other comparably effective measures to minimize use with commercial high-power-factor ballasts.

Room air conditioner means a consumer product, other than a ''packaged terminal air conditioner,'' which is powered by a single phase electric current and which is an encased assembly designed as a unit for mounting in a window or through the wall for the purpose of providing delivery of conditioned air to an enclosed space. It includes a prime source of refrigeration and may include a means for ventilating and heating.

Rough or vibration service incandescent reflector lamp means a reflector lamp:

in which a C–11 (5 support), C–17 (8 support), or C–22 (16 support) filament is mounted (the number of support excludes lead wires); in which the filament configuration is as shown in Chapter 6 of the 1993 *Illuminating Engineering Society of North America Lighting Handbook*, 8th Edition (see 10 CFR 430.22); and that is designated and marketed specifically for rough or vibration service applications.

Rough service lamp means a lamp that—

(1) Has a minimum of 5 supports with filament configurations that are C–7A, C–11, C–17, and C–22 as listed in Figure 6–12 of the IESNA Lighting Handbook (incorporated by reference; *see* § 430.3), or similar configurations where lead wires are not counted as supports; and

(2) Is designated and marketed specifically for 'rough service' applications, with

(i) The designation appearing on the lamp packaging; and

(ii) Marketing materials that identify the lamp as being for rough service.

S-video means a video display interface that transmits analog video over two channels: luma and chroma as defined by IEC 60933–5 Ed. 1.0 (incorporated by reference; see § 430.3).

Secretary means the Secretary of the Department of Energy.

Security or life safety alarm or surveillance system means:

(1) Equipment designed and marketed to perform any of the following functions (on a continuous basis):

(i) Monitor, detect, record, or provide notification of intrusion or access to real property or physical assets or notification of threats to life safety.

(ii) Deter or control access to real property or physical assets, or prevent the unauthorized removal of physical assets.

(iii) Monitor, detect, record, or provide notification of fire, gas, smoke, flooding, or other physical threats to real property, physical assets, or life safety.

(2) This term does not include any product with a principal function other than life safety, security, or surveillance that:

(i) Is designed and marketed with a built-in alarm or theft-deterrent feature; or

(ii) Does not operate necessarily and continuously in active mode.

Semi-automatic clothes washer means a class of clothes washer that is the same as an automatic clothes washer except that user intervention is required to regulate the water temperature by adjusting the external water faucet valves.

Shatter-resistant lamp, *shatter-proof lamp*, or *shatter-protected lamp* means a lamp that—

(1) Has a coating or equivalent technology that is compliant with NSF/ANSI 51 (incorporated by reference; *see* § 430.3) and is designed to contain the glass if the glass envelope of the lamp is broken; and

(2) Is designated and marketed for the intended application, with

(i) The designation on the lamp packaging; and

(ii) Marketing materials that identify the lamp as being shatter-resistant, shatter-proof, or shatter-protected.

Showerhead means a component or set of components distributed in commerce for attachment to a single supply fitting, for spraying water onto a bather, typically from an overhead position, excluding safety shower showerheads.

Small duct, high velocity system means a heating and cooling product that contains a blower and indoor coil combination that—

(1) Is designed for, and produces, at least 1.2 inches of external static pressure when operated at the certified air volume rate of 220–350 CFM per rated ton of cooling; and

(2) When applied in the field, uses high velocity room outlets generally greater than 1,000 fpm that have less than 6.0 square inches of free area.

Space constrained product means a central air conditioner or heat pump:

(1) That has rated cooling capacities no greater than 30,000 BTU/hr;

(2) That has an outdoor or indoor unit having at least two overall exterior dimensions or an overall displacement that:

(i) Is substantially smaller than those of other units that are:

(A) Currently usually installed in site-built single family homes; and

(B) Of a similar cooling, and, if a heat pump, heating capacity; and

(ii) If increased, would certainly result in a considerable increase in the usual cost of installation or would certainly result in a significant loss in the utility of the product to the consumer; and

(3) Of a product type that was available for purchase in the United States as of December 1, 2000.

Specialty application mercury vapor lamp ballast means a mercury vapor lamp ballast that—

(1) Is designed and marketed for operation of mercury vapor lamps used in quality inspection, industrial processing, or scientific use, including fluorescent microscopy and ultraviolet curing; and

(2) In the case of a specialty application mercury vapor lamp ballast, the label of which—

(i) Provides that the specialty application mercury vapor lamp ballast is 'For specialty applications only, not for general illumination'; and

(ii) Specifies the specific applications for which the ballast is designed.

Standby mode means the condition in which an energy-using product—

(1) Is connected to a main power source; and

(2) Offers one or more of the following user-oriented or protective functions:

(i) To facilitate the activation or deactivation of other functions (including active mode) by remote switch (including remote control), internal sensor, or timer; or

(ii) Continuous functions, including information or status displays (including clocks) or sensor-based functions.

State means a State, the District of Columbia, Puerto Rico, or any territory or possession of the United States.

State regulation means a law or regulation of a State or political subdivision thereof.

Supplementary heater means a heating device that provides heat to a space in addition to that which is supplied by a primary heater. Supplementary heaters include portable electric heaters.

Surface unit means either a heating unit mounted in a cooking top, or a heating source and its associated heated area of the cooking top, on which vessels are placed for the cooking or heating of food.

Television set or TV means a product designed to produce dynamic video, contains an internal TV tuner encased within the product housing, and that is capable of receiving dynamic visual content from wired or wireless sources including but not limited to:

(1) Broadcast and similar services for terrestrial, cable, satellite, and/or broadband transmission of analog and/or digital signals; and/or

(2) Display-specific data connections, such as HDMI, Component video, S-video, Composite video; and/or

(3) Media storage devices such as a USB flash drive, memory card, or a DVD; and/or

(4) Network connections, usually using Internet Protocol, typically carried over Ethernet or Wi-Fi.

Tested combination means a multi-split system with multiple indoor coils having the following features:

(1) The basic model of a system used as a tested combination shall consist of one outdoor unit, with one or more compressors, that is matched with between 2 and 5 indoor units; for multi-split systems, each of these indoor units shall be designed for individual operation.

(2) The indoor units shall—

(i) Represent the highest sales model family, or another indoor model family if the highest sales model family does not provide sufficient capacity (see ii);

(ii) Together, have a nominal capacity that is between 95% and 105% of the nominal capacity of the outdoor unit;

(iii) Not, individually, have a capacity that is greater than 50% of the nominal capacity of the outdoor unit;

(iv) Operate at fan speeds that are consistent with the manufacturer's specifications; and

(v) All be subject to the same minimum external static pressure requirement (i.e., 0 inches of water column for non-ducted, see Table 2 in appendix M to subpart B of this part for ducted indoor units) while being configurable to produce the same static pressure at the exit of each outlet plenum when manifolded as per section 2.4.1 of appendix M.

Through-the-wall air conditioner and heat pump means a central air conditioner or heat pump that is designed to be installed totally or partially within a fixed-size opening in an exterior wall, and:

(1) Is manufactured prior to January 23, 2010;

(2) Is not weatherized;

(3) Is clearly and permanently marked for installation only through an exterior wall;

(4) Has a rated cooling capacity no greater than 30,000 Btu/hr;

(5) Exchanges all of its outdoor air across a single surface of the equipment cabinet; and

(6) Has a combined outdoor air exchange area of less than 800 square inches (split systems) or less than 1,210 square inches (single packaged systems) as measured on the surface described in paragraph (5) of this definition.

Torchiere means a portable electric lamp with a reflector bowl that directs light upward to give indirect illumination.

Unvented gas heater means an unvented, self-contained, free-standing, nonrecessed gas-burning appliance which furnishes warm air by gravity or fan circulation.

Unvented home heating equipment means a class of home heating equipment, not including furnaces, used for the purpose of furnishing heat to a space proximate to such heater directly from the heater and without duct connections and includes electric heaters and unvented gas and oil heaters.

Unvented oil heater means an unvented, self-contained, free-standing, nonrecessed oil-burning appliance which furnishes warm air by gravity or fan circulation.

Urinal means a plumbing fixture which receives only liquid body waste and, on demand, conveys the waste through a trap seal into a gravity drainage system, except such term does not include fixtures designed for installations in prisons.

Vented floor furnace means a self-contained vented heater suspended from the floor of the space being heated, taking air for combustion from outside this space. The vented floor furnace supplies heated air circulated by gravity or by a fan directly into the space to be heated through openings in the casing.

Vented hearth heater means a vented appliance which simulates a solid fuel fireplace and is designed to furnish warm air, with or without duct connections, to the space in which it is installed. The circulation of heated room air may be by gravity or mechanical means. A vented hearth heater may be freestanding, recessed, zero clearance, or a gas fireplace insert or stove. The following products are not subject to the energy conservation standards for vented hearth heaters:

(1) Vented gas log sets and

(2) Vented gas hearth products that meet all of the following four criteria:

(i) Certified to ANSI Z21.50 (incorporated by reference; see § 430.3), but not to ANSI Z21.88 (incorporated by reference; see § 430.3);

(ii) Sold without a thermostat and with a warranty provision expressly voiding all manufacturer warranties in the event the product is used with a thermostat;

(iii) Expressly and conspicuously identified on its rating plate and in all manufacturer's advertising and product literature as a ''Decorative Product: Not for use as a Heating Appliance''; and

(iv) With respect to products sold after January 1, 2015, not equipped with a standing pilot light or other continuously-burning ignition source.

Vented home heating equipment or *vented heater* means a class of home heating equipment, not including furnaces, designed to furnish warmed air to the living space of a residence, directly from the device, without duct connections (except that boots not to exceed 10 inches beyond the casing may be permitted and except for vented hearth heaters, which may be with or without duct connections) and includes: vented wall furnace, vented floor furnace, vented room heater, and vented hearth heater.

Vented room heater means a self-contained, free standing, nonrecessed, vented heater for furnishing warmed air to the space in which it is installed. The vented room heater supplies heated air circulated by gravity or by a fan

directly into the space to be heated through openings in the casing.

Vented wall furnace means a self-contained vented heater complete with grilles or the equivalent, designed for incorporation in, or permanent attachment to, a wall of a residence and furnishing heated air circulated by gravity or by a fan directly into the space to be heated through openings in the casing.

Vibration service lamp means a lamp that—

(1) Has filament configurations that are C–5, C–7A, or C–9, as listed in Figure 6–12 of the IESNA Lighting Handbook (incorporated by reference; *see* § 430.3) or similar configurations;

(2) Has a maximum wattage of 60 watts;

(3) Is sold at retail in packages of 2 lamps or less; and

(4) Is designated and marketed specifically for vibration service or vibration-resistant applications, with—

(i) The designation appearing on the lamp packaging; and

(ii) Marketing materials that identify the lamp as being vibration service only.

Voltage range means a band of operating voltages as marked on an incandescent lamp, indicating that the lamp is designed to operate at any voltage within the band.

Wall electric heater means an electric heater (excluding baseboard electric heaters) which is intended to be recessed in or surface mounted on walls, which transfers heat by radiation and/or convection (either natural or forced) and which includes forced convectors, natural convectors, radiant heaters, high wall or valance heaters.

Water closet means a plumbing fixture that has a water-containing receptor which receives liquid and solid body waste, and upon actuation, conveys the waste through an exposed integral trap seal into a gravity drainage system, except such term does not include fixtures designed for installation in prisons.

Water heater means a product which utilizes oil, gas, or electricity to heat potable water for use outside the heater upon demand, including—

(a) Storage type units which heat and store water at a thermostatically controlled temperature, including gas storage water heaters with an input of 75,000 Btu per hour or less, oil storage water heaters with an input of 105,000 Btu per hour or less, and electric storage water heaters with an input of 12 kilowatts or less;

(b) Instantaneous type units which heat water but contain no more than one gallon of water per 4,000 Btu per hour of input, including gas instantaneous water heaters with an input of 200,000 Btu per hour or less, oil instantaneous water heaters with an input of 210,000 Btu per hour or less, and electric instantaneous water heaters with an input of 12 kilowatts or less; and

(c) Heat pump type units, with a maximum current rating of 24 amperes at a voltage no greater than 250 volts, which are products designed to transfer thermal energy from one temperature level to a higher temperature level for the purpose of heating water, including all ancillary equipment such as fans, storage tanks, pumps, or controls necessary for the device to perform its function.

Water use means the quantity of water flowing through a showerhead, faucet, water closet, or urinal at point of use, determined in accordance with test procedures under appendices S and T of subpart B of this part.

Weatherized warm air furnace or boiler means a furnace or boiler designed for installation outdoors, approved for resistance to wind, rain, and snow, and supplied with its own venting system.

[42 FR 27898, June 1, 1977]

EDITORIAL NOTE: For FEDERAL REGISTER citations affecting § 430.2, see the List of CFR Sections Affected, which appears in the Finding Aids section of the printed volume and at *www.fdsys.gov*.

§ 430.3 Materials incorporated by reference.

(a) *General.* We incorporate by reference the following standards into part 430. The material listed has been approved for incorporation by reference by the Director of the Federal Register in accordance with 5 U.S.C. 552(a) and 1 CFR part 51. Any subsequent amendment to a standard by the standard-setting organization will not affect the DOE regulations unless and

until amended by DOE. Material is incorporated as it exists on the date of the approval and a notice of any change in the material will be published in the FEDERAL REGISTER. All approved material is available for inspection at the National Archives and Records Administration (NARA). For information on the availability of this material at NARA, call 202–741–6030, or go to: *http://www.archives.gov/federal_register/code_of_federal_regulations/ibr_locations.html*. Also, this material is available for inspection at U.S. Department of Energy, Office of Energy Efficiency and Renewable Energy, Building Technologies Program, 6th Floor, 950 L'Enfant Plaza, SW., Washington, DC 20024, (202) 586–2945, or go to: *http://www1.eere.energy.gov/buildings/appliance_standards/*. Standards can be obtained from the sources below.

(b) *AHRI*. Air-Conditioning, Heating, and Refrigeration Institute, 2111 Wilson Blvd, Suite 500, Arlington, VA 22201, 703–524–8800, or go to *http://www.ahrinet.org*.

(1) ARI 210/240–2006, Unitary Air-Conditioning and Air-Source Heat Pump Equipment, approved March 26, 1998, IBR approved for appendix M to subpart B.

(2) [Reserved]

(c) *AATCC*. American Association of Textile Chemists and Colorists, P.O. Box 12215, Research Triangle Park, NC 27709, (919) 549–3526, or go to *www.aatcc.org*.

(1) AATCC Test Method 79–2010, Absorbency of Textiles, Revised 2010, IBR approved for Appendix J2 to Subpart B.

(2) AATCC Test Method 118–2007, Oil Repellency: Hydrocarbon Resistance Test, Revised 2007, IBR approved for Appendix J2 to Subpart B.

(3) AATCC Test Method 135–2010, Dimensional Changes of Fabrics after Home Laundering, Revised 2010, IBR approved for Appendix J2 to Subpart B.

(d) *ANSI*. American National Standards Institute, 25 W. 43rd Street, 4th Floor, New York, NY 10036, 212–642–4900, or go to *http://www.ansi.org*.

(1) ANSI C78.3–1991 (''ANSI C78.3''), American National Standard for Fluorescent Lamps-Instant-start and Cold-Cathode Types-Dimensional and Electrical Characteristics, approved July 15, 1991; IBR approved for § 430.32.

(2) ANSI C78.20–2003, Revision of ANSI C78.20–1995 (''ANSI C78.20''), American National Standard for electric lamps—A, G, PS, and Similar Shapes with E26 Medium Screw Bases, approved October 30, 2003; IBR approved for § 430.2.

(3) ANSI C78.21–1989, American National Standard for Electric Lamps—PAR and R Shapes, approved March 3, 1989, IBR approved for § 430.2.

(4) ANSI C78.21–2003, Revision of ANSI C78.21–1995 with all supplements, American National Standard for Electric Lamps—PAR and R Shapes, approved October 30, 2003, IBR approved for § 430.2.

(5) ANSI_ANSLG C78.81–2010, (''ANSI C78.81''), American National Standard for Electric Lamps—Double-Capped Fluorescent Lamps— Dimensional and Electrical Characteristics, approved January 14, 2010, IBR approved for § 430.2, § 430.32, appendix Q, appendix Q1, and appendix R to subpart B.

(6) ANSI C78.375–1997, Revision of ANSI C78.375–1991 (''ANSI C78.375''), American National Standard for Fluorescent Lamps—Guide for Electrical Measurements, first edition, approved September 25, 1997; IBR approved for appendix Q, appendix Q1 and appendix R to subpart B.

(7) ANSI_IEC C78.901–2005, Revision of ANSI C78.901–2001 (''ANSI C78.901''), American National Standard for Electric Lamps—Single-Based Fluorescent Lamps—Dimensional and Electrical Characteristics, approved March 23, 2005; IBR approved for § 430.2 and appendix R to subpart B.

(8) ANSI C79.1–1994, American National Standard for Nomenclature for Glass Bulbs—Intended for Use with Electric Lamps, approved March 24, 1994, IBR approved for § 430.2.

(9) ANSI C79.1–2002, American National Standard for Electric Lamps—Nomenclature for Glass Bulbs Intended for Use with Electric Lamps, approved September 16, 2002, IBR approved for § 430.2.

(10) ANSI_ANSLG_ C81.61–2006, Revision of ANSI C81.61–2005, (''ANSI C81.61''), American National Standard for electrical lamp bases—Specifications for Bases (Caps) for Electric

Lamps, approved August 25, 2006, IBR approved for § 430.2.

(11) ANSI C82.1–2004, (''ANSI C82.1''), American National Standard for Lamp Ballast—Line Frequency Fluorescent Lamp Ballast, approved November 19, 2004; IBR approved for appendix Q and appendix Q1 to subpart B.

(12) ANSI C82.2–2002, (''ANSI C82.2''), American National Standard for Lamp Ballasts—Method of Measurement of Fluorescent Ballasts, Approved June 6, 2002, IBR approved for appendix Q and appendix Q1 to subpart B.

(13) ANSI C82.3–2002, Revision of ANSI C82.3–1983 (R 1995) (''ANSI C82.3''), American National Standard for Reference Ballasts for Fluorescent Lamps, approved September 4, 2002; IBR approved for appendix Q, appendix Q1 and appendix R to subpart B.

(14) ANSI C82.11 Consolidated-2002, (''ANSI C82.11''), American National Standard for Lamp Ballasts—High-frequency Fluorescent Lamp Ballasts—Supplements, approved March 11, 1999, August 5, 1999 and January 17, 2002; IBR approved for appendix Q and appendix Q1 to subpart B.

(15) ANSI C82.13–2002 (''ANSI C82.13''), American National Standard for Lamp Ballasts—Definitions for Fluorescent Lamps and Ballasts, approved July 23, 2002; IBR approved for appendix Q and appendix Q1 to subpart B.

(16) ANSI Z21.56–2006, section 2.10 (''ANSI Z21.56''), Standard for Gas-Fired Pool Heaters, approved December 13, 2005, IBR approved for appendix P to subpart B.

(17) ANSI Z21.50–2007 (CSA 2.22–2007), (''ANSI Z21.50''), Vented Gas Fireplaces, Fifth Edition, Approved February 22, 2007, IBR approved for § 430.2.

(18) ANSI Z21.88–2009 (CSA 2.33–2009), (''ANSI Z21.88''), Vented Gas Fireplace Heaters, Fifth Edition, Approved March 26, 2009, IBR approved for § 430.2.

(e) [Reserved]

(f) *ASHRAE.* American Society of Heating, Refrigerating and Air-Conditioning Engineers, Inc., Publication Sales, 1791 Tullie Circle, NE., Atlanta, GA 30329, 800–527–4723 or 404–636–8400, or go to *http://www.ashrae.org*.

(1) ANSI/ASHRAE Standard 16–1983 (''ANSI/ASHRAE 16'') (RA 2009), (Reaffirmation of ANSI/ASHRAE Standard 16–1983 [RA 1999]), Method of Testing for Rating Room Air Conditioners and Packaged Terminal Air Conditioners, ASHRAE approved October 18, 1988, and reaffirmed June 20, 2009. ANSI approved October 20, 1998 and reaffirmed June 25, 2009. IBR approved for appendix F to subpart B.

(2) ASHRAE 23–2005, Methods of Testing for Rating Positive Displacement Refrigerant Compressors and Condensing Units, approved February 10, 2005, IBR approved for appendix M to subpart B.

(3) ASHRAE 37–2005, Methods of Testing for Rating Unitary Air-Conditioning and Heat Pump Equipment, approved March 11, 2005, IBR approved for appendix M to subpart B.

(4) ASHRAE 41.1–1986 (Reaffirmed 2001), Standard Method for Temperature Measurement, approved February 18, 1987, IBR approved for appendix E and appendix M to subpart B.

(5) ASHRAE 41.2–1987 (Reaffirmed 1992), Standard Methods for Laboratory Airflow Measurement, approved October 1, 1987, IBR approved for appendix M to subpart B.

(6) ASHRAE 41.6–1994 (Reaffirmed 2001), Standard Method for Measurement of Moist Air Properties, approved August 30, 1994, IBR approved for appendix M to subpart B.

(7) ASHRAE 41.9–2000, Calorimeter Test Methods for Mass Flow Measurements of Volatile Refrigerants, approved October 6, 2000, IBR approved for appendix M to subpart B.

(8) ASHRAE/AMCA 51–1999/210–1999, Laboratory Methods of Testing Fans for Aerodynamic Performance Rating, approved December 2, 1999, IBR approved for appendix M to subpart B.

(9) ASHRAE 103–1993, Methods of Testing for Annual Fuel Utilization Efficiency of Residential Central Furnaces and Boilers, (with Errata of October 24, 1996) except for sections 3.0, 7.2.2.5, 8.6.1.1, 9.1.2.2, 9.5.1.1, 9.5.1.2.1, 9.5.1.2.2, 9.5.2.1, 9.7.1, 10.0, 11.2.12, 11.3.12, 11.4.12, 11.5.12 and appendices B and C, approved October 4, 1993, IBR approved for § 430.23 and appendix N to subpart B.

(10) ASHRAE 116–1995 (RA 2005), Methods of Testing for Rating Seasonal Efficiency of Unitary Air Conditioners and Heat Pumps, approved July 24, 1995, IBR approved for appendix M to subpart B.

(g) *ASME*. American Society of Mechanical Engineers, Service Center, 22 Law Drive, P.O. Box 2900, Fairfield, NJ 07007, 973–882–1170, or go to *http://www.asme.org*.

(1) ASME A112.18.1–2012, (''ASME A112.18.1–2012''), ''Plumbing supply fittings,'' section 5.4, approved December, 2012, IBR approved for appendix S to subpart B.

(2) ASME A112.19.2–2008, (''ASME A112.19.2–2008''), ''Ceramic plumbing fixtures,'' sections 7.1, 7.1.1, 7.1.2, 7.1.3, 7.1.4, 7.1.5, 7.4, 8.2, 8.2.1, 8.2.2, 8.2.3, 8.6, Table 5, and Table 6 approved August 2008, including Update No. 1, dated August 2009, and Update No. 2, dated March 2011, IBR approved for § 430.2 and appendix T to subpart B.

(h) *AHAM*. Association of Home Appliance Manufacturers, 1111 19th Street, NW., Suite 402, Washington, DC 20036, 202–872–5955, or go to *http://www.aham.org*.

(1) ANSI/AHAM DH–1–2008 (''ANSI/AHAM DH–1''), *Dehumidifiers,* ANSI approved May 9, 2008, IBR approved for appendix X1 to subpart B.

(2) ANSI/AHAM DW–1–1992, American National Standard, Household Electric Dishwashers, approved February 6, 1992, IBR approved for appendix C to subpart B and § 430.32.

(3) ANSI/AHAM DW–1–2010, *Household Electric Dishwashers,* (ANSI approved September 18, 2010), IBR approved for appendix C1 to subpart B.

(4) AHAM HLD–1–2009 (''AHAM HLD–1''), Household Tumble Type Clothes Dryers, (2009), IBR approved for appendix D1 and D2 to subpart B.

(5) ANSI/AHAM HRF–1–1979, (Revision of ANSI B38.1–1970), (''HRF–1–1979''), *American National Standard, Household Refrigerators, Combination Refrigerator-Freezers and Household Freezers,* approved May 17, 1979, IBR approved for appendices A1 and B1 to subpart B.

(6) AHAM HRF–1–2008, (''HRF–1–2008''), Association of Home Appliance Manufacturers, Energy and Internal Volume of Refrigerating Appliances (2008), including Errata to Energy and Internal Volume of Refrigerating Appliances, Correction Sheet issued November 17, 2009, IBR approved for appendices A and B to subpart B.

(7) ANSI/AHAM RAC–1–2008 (''ANSI/AHAM RAC–1''), Room Air Conditioners, (2008; ANSI approved July 7, 2008), IBR approved for appendix F to subpart B.

(i) *CEA*. Consumer Electronics Association, Technology & Standards Department, 1919 S. Eads Street, Arlington, VA 22202, 703–907–7600, or go to *www.CE.org*.

(1) CEA Standard, CEA–770.3–D, *High Definition TV Analog Component Video Interface,* published February 2008; IBR approved for § 430.2.

(2) [Reserved]

(j) *CEC*. California Energy Commission, 1516 Ninth Street, MS–25, Sacramento, CA 95814, 916–654–4091, or go to *http://www.energy.ca.gov*.

(1) CEC Test Method for Calculating the Energy Efficiency of Single-Voltage External Ac-Dc and Ac-Ac Power Supplies, August 11, 2004, IBR approved for appendix Z to subpart B.

(2) [Reserved]

(k) *CIE*. Commission Internationale de l'Eclairage (CIE), Central Bureau, Kegelgasse 27, A–1030, Vienna, Austria, 011+43 1 714 31 87 0, or go to *http://www.cie.co.at*.

(1) CIE 13.3–1995 (''CIE 13.3''), Technical Report: Method of Measuring and Specifying Colour Rendering Properties of Light Sources, 1995, ISBN 3 900 734 57 7; IBR approved for § 430.2 and appendix R to subpart B.

(2) CIE 15:2004 (''CIE 15''), Technical Report: Colorimetry, 3rd edition, 2004, ISBN 978 3 901906 33 6; IBR approved for appendix R to subpart B.

(l) *Environmental Protection Agency (EPA),* ENERGY STAR documents published by the Environmental Protection Agency are available online at *http://www.energystar.gov* or by contacting the Energy Star hotline at 1–888–782–7937.

(1) ENERGY STAR Testing Facility Guidance Manual: Building a Testing Facility and Performing the Solid State Test Method for ENERGY STAR Qualified Ceiling Fans, Version 1.1, approved December 9, 2002, IBR approved for appendix U to subpart B.

(2) ENERGY STAR Program Requirements for Residential Light Fixtures, Version 4.0, approved January 10, 2005, IBR approved for appendix V to subpart B.

(3) ENERGY STAR Program Requirements for Dehumidifiers, approved January 1, 2001, IBR approved for appendix X to subpart B.

(4) Energy Star Program Requirements for Single Voltage External Ac-Dc and Ac-Ac Power Supplies, Eligibility Criteria (Version 2.0), effective date for EPS Manufacturers November 1, 2008, IBR approved for subpart C, §430.32.

(5) Test Methodology for Determining the Energy Performance of Battery Charging Systems, approved December 2005, IBR approved for appendix Y to subpart B.

(m) *HDMI®*. High-Definition Multimedia Interface Licensing, LLC, 1140 East Arques Avenue, Suite 100, Sunnyvale, CA 94085, 408–616–1542, or go to *www.hdmi.org*.

(1) HDMI Specification Informational Version 1.0, *High-Definition Multimedia Interface Specification*, published September 4, 2003; IBR approved for §430.2.

(2) [Reserved]

(n) *IESNA*. Illuminating Engineering Society of North America, 120 Wall Street, Floor 17, New York, NY 10005–4001, 212–248–5000, or go to *http://www.iesna.org*.

(1) *The IESNA Lighting Handbook, Reference & Application*, (''The IESNA Lighting Handbook''), 9th ed., Chapter 6, ''Light Sources,'' July 2000, IBR approved for §430.2.

(2) IES LM–9–09, (''IES LM–9''), IES Approved Method for the Electrical and Photometric Measurement of Fluorescent Lamps, approved January 31, 2009; IBR approved for §430.2 and appendix R to subpart B.

(3) IESNA LM–16–1993 (''IESNA LM–16''), IESNA Practical Guide to Colorimetry of Light Sources, December 1993, IBR approved for §430.2.

(4) IES LM–20–1994, IESNA Approved Method for Photometric Testing of Reflector-Type Lamps, approved December 3, 1994, IBR approved for appendix R to subpart B.

(5) IES LM–45–09, (''IES LM–45''), IES Approved Method for the Electrical and Photometric Measurement of General Service Incandescent Filament Lamps, approved December 14, 2009; IBR approved for appendix R to subpart B.

(6) IESNA LM–49–01 (''IESNA LM–49''), IESNA Approved Method for Life Testing of Incandescent Filament Lamps, approved December 1, 2001, IBR approved for §430.2 and appendix R to subpart B.

(7) IES LM–58–1994, IESNA Guide to Spectroradiometric Measurements, approved December 3, 1994, IBR approved for appendix R to subpart B.

(o) *IEC*. International Electrotechnical Commission, available from the American National Standards Institute, 25 W. 43rd Street, 4th Floor, New York, NY 10036, (212) 642–4900, or go to *http://webstore.ansi.org*.

(1) IEC Standard 933–5:1992, (''IEC 60933–5 Ed. 1.0''), *Audio, video and audio-visual systems—Interconnections and matching values—Part 5: Y/C connector for video systems—Electrical matching values and description of the connector*, First Edition, 1992–12; IBR approved for §430.2. (Note: IEC 933–5 is also known as IEC 60933–5.)

(2) IEC Standard 62087:2011, (''IEC 62087 Ed. 3.0''), *Methods of measurement for the power consumption of audio, video, and related equipment*, Edition 3.0, 2011–04, Sections 3.1.1, 3.1.18, 11.4.1, 11.4.2, 11.4.5, 11.4.6, 11.4.8, 11.4.9, 11.4.10, 11.4.11, 11.5.5, and annexc.3; IBR approved for Appendix H to subpart B of this part.

(3) International Electrotechnical Commission (IEC) Standard 62301 (''IEC 62301''), *Household electrical appliances—Measurement of standby power* (first edition, June 2005), IBR approved for appendix F, and appendix I to subpart B.

(4) IEC 62301 (''IEC 62301''), *Household electrical appliances—Measurement of standby power*, (Edition 2.0, 2011–01), IBR approved for appendices C1, D1, D2, G, H, I, J2, N, O, P, and X1 to subpart B.

(p) *ITU*. International Telecommunication Union, Place des Nations, 1211 Geneva 20, Switzerland, +41–22–730–5111, or go to *http://www.itu.int/en*.

(1) ITU–R BT.470–6, Conventional Television Systems, published November 1998; IBR approved for §430.2.

(2) [Reserved]

(q) *NSF International*. NSF International, P.O. Box 130140, 789 North Dixboro Road, Ann Arbor, MI 48113–0140, 1–800–673–6275, or go to *http://www.nsf.org*.

(1) NSF/ANSI 51–2007 (''NSF/ANSI 51''), Food equipment materials, revised and adopted April 2007, IBR approved for § 430.2.

(2) [Reserved]

(r) *Optical Society of America*. *Optical Society of America*, 2010 Massachusetts Ave., NW., Washington, DC 20036–1012, 202–223–8130, or go to *http://www.opticsinfobase.org;*

(1) ''Computation of Correlated Color Temperature and Distribution Temperature,'' A.R. Robertson, Journal of the Optical Society of America, Volume 58, Number 11, November 1968, pages 1528–1535, IBR approved for § 430.2.

(2) [Reserved]

(s) *SMPTE*. Society of Motion Picture and Television Engineers, 3 Barker Ave., 5th Floor, White Plains, NY 10601, 914–761–1100, or go to *http://standards.smpte.org*.

(1) SMPTE 170M–2004, (''SMPTE 170M–2004''), *SMPTE Standard for Television—Composite Analog Video Signal—NTSC for Studio Applications*, approved November 30, 2004; IBR approved for § 430.2.

(2) [Reserved]

(t) *U.S. Department of Energy*, *Office of Energy Efficiency and Renewable Energy*, Resource Room of the Building Technologies Program, 950 L'Enfant Plaza, SW., 6th Floor, Washington, DC 20024, 202–586–2945, or go to *http://www.energystar.gov*.

(1) ENERGY STAR Program Requirements for [Compact Fluorescent Lamps] CFLs, Version 3.0, approved October 30, 2003, IBR approved for appendix V to subpart B.

(2) ENERGY STAR Program Requirements for [Compact Fluorescent Lamps] CFLs, approved August 9, 2001, IBR approved for appendix W to subpart B.

[74 FR 12066, Mar. 23, 2009]

EDITORIAL NOTE: For FEDERAL REGISTER citations affecting § 430.3, see the List of CFR Sections Affected, which appears in the Finding Aids section of the printed volume and at www.fdsys.gov.

§ 430.4 Sources for information and guidance.

(a) *General*. The standards listed in this paragraph are referred to in the DOE test procedures and elsewhere in this part but are not incorporated by reference. These sources are given here for information and guidance.

(b) *IESNA*. Illuminating Engineering Society of North America, 120 Wall Street, Floor 17, New York, NY 10005–4001, 212–248–5000, or go to *http://www.iesna.org*.

(1) *Illuminating Engineering Society of North America Lighting Handbook*, 8th Edition, 1993.

(2) [Reserved]

(c) *IEEE*. Institute of Electrical and Electronics Engineers, Inc., 3 Park Avenue, 17th Floor, New York, NY, 10016–5997, 212–419–7900, or go to *http://www.ieee.org*.

(1) IEEE 1515–2000, IEEE Recommended Practice for Electronic Power Subsystems: Parameter Definitions, Test Conditions, and Test Methods, March 30, 2000.

(2) IEEE 100, Authoritative Dictionary of IEEE Standards Terms, 7th Edition, January 1, 2006.

(d) *IEC*. International Electrotechnical Commission, available from the American National Standards Institute, 11 W. 42nd Street, New York, NY 10036, 212–642–4936, or go to *http://www.iec.ch*.

(1) IEC 62301, Household electrical appliances—Measurement of standby power, First Edition, June 13, 2005.

(2) IEC 60050, International Electrotechnical Vocabulary.

(e) National Voluntary Laboratory Accreditation Program, Standards Services Division, NIST, 100 Bureau Drive, Stop 2140, Gaithersburg, MD 20899–2140, 301–975–4016, or go to *http://ts.nist.gov/standards/accreditation*.

(1) National Voluntary Laboratory Accreditation Program Handbook 150–01, Energy Efficient Lighting Products, Lamps and Luminaires, August 1993.

(2) [Reserved]

[74 FR 12066, Mar. 23, 2009]

Subpart B—Test Procedures

§ 430.21 Purpose and scope.

This subpart contains test procedures required to be prescribed by DOE pursuant to section 323 of the Act.

§ 430.23 Test procedures for the measurement of energy and water consumption.

When the test procedures of this section call for rounding off of test results, and the results fall equally between two values of the nearest dollar, kilowatt-hour, or other specified nearest value, the result shall be rounded up to the nearest higher value.

(a) *Refrigerators and refrigerator-freezers.* (1) The estimated annual operating cost for electric refrigerators and electric refrigerator-freezers without an anti-sweat heater switch shall be the product of the following three factors, the resulting product then being rounded off to the nearest dollar per year:

(i) The representative average-use cycle of 365 cycles per year;

(ii) The average per-cycle energy consumption for the standard cycle in kilowatt-hours per cycle, determined according to 6.2 (6.3.6 for externally vented units) of appendix A1 of this subpart before appendix A becomes mandatory and 6.2 (6.3.6 for externally vented units) of appendix A of this subpart after appendix A becomes mandatory (see the note at the beginning of appendix A); and

(iii) The representative average unit cost of electricity in dollars per kilowatt-hour as provided by the Secretary.

(2) The estimated annual operating cost for electric refrigerators and electric refrigerator-freezers with an anti-sweat heater switch shall be the product of the following three factors, the resulting product then being rounded off to the nearest dollar per year:

(i) The representative average-use cycle of 365 cycles per year;

(ii) Half the sum of the average per-cycle energy consumption for the standard cycle and the average per-cycle energy consumption for a test cycle type with the anti-sweat heater switch in the position set at the factory just before shipping, each in kilowatt-hours per cycle, determined according to 6.2 (6.3.6 for externally vented units) of appendix A1 of this subpart before appendix A becomes mandatory and 6.2 (6.3.6 for externally vented units) of appendix A of this subpart after appendix A becomes mandatory (see the note at the beginning of appendix A); and

(iii) The representative average unit cost of electricity in dollars per kilowatt-hour as provided by the Secretary.

(3) The estimated annual operating cost for any other specified cycle type for electric refrigerators and electric refrigerator-freezers shall be the product of the following three factors, the resulting product then being rounded off to the nearest dollar per year:

(i) The representative average-use cycle of 365 cycles per year;

(ii) The average per-cycle energy consumption for the specified cycle type, determined according to 6.2 (6.3.6 for externally vented units) of appendix A1 to this subpart before appendix A becomes mandatory and 6.2 (6.3.6 for externally vented units) of appendix A of this subpart after appendix A becomes mandatory (see the note at the beginning of appendix A); and

(iii) The representative average unit cost of electricity in dollars per kilowatt-hour as provided by the Secretary.

(4) The energy factor for electric refrigerators and electric refrigerator-freezers, expressed in cubic feet per kilowatt-hour per cycle, shall be:

(i) For electric refrigerators and electric refrigerator-freezers without an anti-sweat heater switch, the quotient of:

(A) The adjusted total volume in cubic feet, determined according to 6.1 of appendix A1 of this subpart before appendix A becomes mandatory and 6.1 of appendix A of this subpart after appendix A becomes mandatory (see the note at the beginning of appendix A), divided by—

(B) The average per-cycle energy consumption for the standard cycle in kilowatt-hours per cycle, determined according to 6.2 (6.3.6 for externally vented units) of appendix A1 of this subpart before appendix A becomes mandatory and 6.2 (6.3.6 for externally vented units) of appendix A of this subpart after appendix A becomes mandatory (see the note at the beginning of appendix A), the resulting quotient then being rounded off to the second decimal place; and

(ii) For electric refrigerators and electric refrigerator-freezers having an anti-sweat heater switch, the quotient of:

(A) The adjusted total volume in cubic feet, determined according to 6.1 of appendix A1 of this subpart before appendix A becomes mandatory and 6.1 of appendix A of this subpart after appendix A becomes mandatory (see the note at the beginning of appendix A), divided by —

(B) Half the sum of the average per-cycle energy consumption for the standard cycle and the average per-cycle energy consumption for a test cycle type with the anti-sweat heater switch in the position set at the factory just before shipping, each in kilowatt-hours per cycle, determined according to 6.2 (6.3.6 for externally vented units) of appendix A1 of this subpart before appendix A becomes mandatory and 6.2 (6.3.6 for externally vented units) of appendix A of this subpart after appendix A becomes mandatory (see the note at the beginning of appendix A), the resulting quotient then being rounded off to the second decimal place.

(5) The annual energy use of electric refrigerators and electric refrigerator-freezers, expressed in kilowatt-hours per year, shall be the following, rounded to the nearest kilowatt-hour per year:

(i) For electric refrigerators and electric refrigerator-freezers without an anti-sweat heater switch, the representative average use cycle of 365 cycles per year multiplied by the average per-cycle energy consumption for the standard cycle in kilowatt-hours per cycle, determined according to 6.2 (6.3.6 for externally vented units) of appendix A1 of this subpart before appendix A becomes mandatory and 6.2 (6.3.6 for externally vented units) of appendix A of this subpart after appendix A becomes mandatory (see the note at the beginning of appendix A), and

(ii) For electric refrigerators and electric refrigerator-freezers having an anti-sweat heater switch, the representative average use cycle of 365 cycles per year multiplied by half the sum of the average per-cycle energy consumption for the standard cycle and the average per-cycle energy consumption for a test cycle type with the anti-sweat heater switch in the position set at the factory just before shipping, each in kilowatt-hours per cycle, determined according to 6.2 (6.3.6 for externally vented units) of appendix A1 of this subpart before appendix A becomes mandatory and 6.2 (6.3.6 for externally vented units) of appendix A of this subpart after appendix A becomes mandatory (see the note at the beginning of appendix A).

(6) Other useful measures of energy consumption for electric refrigerators and electric refrigerator-freezers shall be those measures of energy consumption for electric refrigerators and electric refrigerator-freezers that the Secretary determines are likely to assist consumers in making purchasing decisions which are derived from the application of appendix A1 of this subpart before appendix A becomes mandatory appendix A of this subpart after appendix A becomes mandatory (see the note at the beginning of appendix A).

(7) The estimated regional annual operating cost for externally vented electric refrigerators and externally vented electric refrigerator-freezers without an anti-sweat heater switch shall be the product of the following three factors, the resulting product then being rounded off to the nearest dollar per year:

(i) The representative average-use cycle of 365 cycles per year,

(ii) The regional average per-cycle energy consumption for the standard cycle in kilowatt-hours per cycle, determined according to 6.3.7 of appendix A1 of this subpart before appendix A becomes mandatory and 6.3.7 of appendix A of this subpart after appendix A becomes mandatory (see the note at the beginning of appendix A); and

(iii) The representative average unit cost of electricity in dollars per kilowatt-hour as provided by the Secretary.

(8) The estimated regional annual operating cost for externally vented electric refrigerators and externally vented electric refrigerator-freezers with an anti-sweat heater switch shall be the product of the following three factors, the resulting product then being rounded off to the nearest dollar per year:

(i) The representative average-use cycle of 365 cycles per year;

(ii) Half the sum of the average per-cycle energy consumption for the standard cycle and the regional average per-cycle energy consumption for a test cycle with the anti-sweat heater switch in the position set at the factory just before shipping, each in kilowatt-hours per cycle, determined according to 6.3.7 of appendix A1 of this subpart before appendix A becomes mandatory and 6.3.7 of appendix A of this subpart after appendix A becomes mandatory (see the note at the beginning of appendix A); and

(iii) The representative average unit cost of electricity in dollars per kilowatt-hour as provided by the Secretary.

(9) The estimated regional annual operating cost for any other specified cycle for externally vented electric refrigerators and externally vented electric refrigerator-freezers shall be the product of the following three factors, the resulting product then being rounded off to the nearest dollar per year:

(i) The representative average-use cycle of 365 cycles per year;

(ii) The regional average per-cycle energy consumption for the specified cycle, in kilowatt-hours per cycle, determined according to 6.3.7 of appendix A1 of this subpart before appendix A becomes mandatory and 6.3.7 of appendix A of this subpart after appendix A becomes mandatory (see the note at the beginning of appendix A); and

(iii) The representative average unit cost of electricity in dollars per kilowatt-hour as provided by the Secretary.

(10) The following principles of interpretation should be applied to the test procedure. The intent of the energy test procedure is to simulate typical room conditions (approximately 70 °F (21 °C)) with door openings, by testing at 90 °F (32.2 °C) without door openings. Except for operating characteristics that are affected by ambient temperature (for example, compressor percent run time), the unit, when tested under this test procedure, shall operate in a manner equivalent to the unit in typical room conditions. The energy used by the unit shall be calculated when a calculation is provided by the test procedure. Energy consuming components that operate in typical room conditions (including as a result of door openings, or a function of humidity), and that are not exempted by this test procedure, shall operate in an equivalent manner during energy testing under this test procedure, or be accounted for by all calculations as provided for in the test procedure. If:

(i) A product contains energy consuming components that operate differently during the prescribed testing than they would during representative average consumer use and

(ii) Applying the prescribed test to that product would evaluate it in a manner that is unrepresentative of its true energy consumption (thereby providing materially inaccurate comparative data), a manufacturer must obtain a waiver in accordance with the relevant provisions of 10 CFR part 430. Examples:

A. Energy saving features that are designed to be activated by a lack of door openings shall not be functional during the energy test.

B. The defrost heater should not either function or turn off differently during the energy test than it would when operating in typical room conditions.

C. Electric heaters that would normally operate at typical room conditions with door openings should also operate during the energy test.

D. Energy used during adaptive defrost shall continue to be tested and adjusted per the calculation provided for in this test procedure.

(b) *Freezers*. (1) The estimated annual operating cost for freezers without an anti-sweat heater switch shall be the product of the following three factors, the resulting product then being rounded off to the nearest dollar per year:

(i) The representative average-use cycle of 365 cycles per year;

(ii) The average per-cycle energy consumption for the standard cycle in kilowatt-hours per cycle, determined according to 6.2 of appendix B1 of this subpart before appendix B becomes mandatory and 6.2 of appendix B of this subpart after appendix B becomes mandatory (see the note at the beginning of appendix B); and

(iii) The representative average unit cost of electricity in dollars per kilowatt-hour as provided by the Secretary.

(2) The estimated annual operating cost for freezers with an anti-sweat heater switch shall be the product of the following three factors, the resulting product then being rounded off to the nearest dollar per year:

(i) The representative average-use cycle of 365 cycles per year;

(ii) Half the sum of the average per-cycle energy consumption for the standard cycle and the average per-cycle energy consumption for a test cycle type with the anti-sweat heater switch in the position set at the factory just before shipping, each in kilowatt-hours per cycle, determined according to 6.2 of appendix B1 of this subpart before appendix B becomes mandatory and 6.2 of appendix B of this subpart after appendix B becomes mandatory (see the note at the beginning of appendix B); and

(iii) The representative average unit cost of electricity in dollars per kilowatt-hour as provided by the Secretary.

(3) The estimated annual operating cost for any other specified cycle type for freezers shall be the product of the following three factors, the resulting product then being rounded off to the nearest dollar per year:

(i) The representative average-use cycle of 365 cycles per year;

(ii) The average per-cycle energy consumption for the specified cycle type, determined according to 6.2 of appendix B1 of this subpart before appendix B becomes mandatory and 6.2 of appendix B of this subpart after appendix B becomes mandatory (see the note at the beginning of appendix B); and

(iii) The representative average unit cost of electricity in dollars per kilowatt-hour as provided by the Secretary.

(4) The energy factor for freezers, expressed in cubic feet per kilowatt-hour per cycle, shall be:

(i) For freezers not having an anti-sweat heater switch, the quotient of:

(A) The adjusted net refrigerated volume in cubic feet, determined according to 6.1 of appendix B1 of this subpart before appendix B becomes mandatory and 6.1 of appendix B of this subpart after appendix B becomes mandatory (see the note at the beginning of appendix B), divided by—

(B) The average per-cycle energy consumption for the standard cycle in kilowatt-hours per cycle, determined according to 6.2 of appendix B1 of this subpart before appendix B becomes mandatory and 6.2 of appendix B of this subpart after appendix B becomes mandatory (see the note at the beginning of appendix B), the resulting quotient then being rounded off to the second decimal place; and

(ii) For freezers having an anti-sweat heater switch, the quotient of:

(A) The adjusted net refrigerated volume in cubic feet, determined according to 6.1 of appendix B1 of this subpart before appendix B becomes mandatory and 6.1 of appendix B of this subpart after appendix B becomes mandatory (see the note at the beginning of appendix B), divided by—

(B) Half the sum of the average per-cycle energy consumption for the standard cycle and the average per-cycle energy consumption for a test cycle type with the anti-sweat heater switch in the position set at the factory just before shipping, each in kilowatt-hours per cycle, determined according to 6.2 of appendix B1 of this subpart before appendix B becomes mandatory and 6.2 of appendix B of this subpart after appendix B becomes mandatory (see the note at the beginning of appendix B), the resulting quotient then being rounded off to the second decimal place.

(5) The annual energy use of all freezers, expressed in kilowatt-hours per year, shall be the following, rounded to the nearest kilowatt-hour per year:

(i) For freezers not having an anti-sweat heater switch, the representative average use cycle of 365 cycles per year multiplied by the average per-cycle energy consumption for the standard cycle in kilowatt-hours per cycle, determined according to 6.2 of appendix B1 of this subpart before appendix B becomes mandatory and 6.2 of appendix B of this subpart after appendix B becomes mandatory (see the note at the beginning of appendix B), and

(ii) For freezers having an anti-sweat heater switch, the representative average use cycle of 365 cycles per year multiplied by half the sum of the average per-cycle energy consumption for the standard cycle and the average per-cycle energy consumption for a test cycle type with the anti-sweat heater switch in the position set at the factory just before shipping, each in kilowatt-hours per cycle, determined according to 6.2 of appendix B1 of this subpart before appendix B becomes mandatory and 6.2 of appendix B of this subpart after appendix B becomes mandatory (see the note at the beginning of appendix B).

(6) Other useful measures of energy consumption for freezers shall be those measures the Secretary determines are likely to assist consumers in making purchasing decisions and are derived from the application of appendix B1 of this subpart before appendix B becomes mandatory and appendix B of this subpart after appendix B becomes mandatory (see the note at the beginning of appendix B).

(7) The following principles of interpretation should be applied to the test procedure. The intent of the energy test procedure is to simulate typical room conditions (approximately 70 °F (21 °C)) with door openings, by testing at 90 °F (32.2 °C) without door openings. Except for operating characteristics that are affected by ambient temperature (for example, compressor percent run time), the unit, when tested under this test procedure, shall operate in a manner equivalent to the unit in typical room conditions. The energy used by the unit shall be calculated when a calculation is provided by the test procedure. Energy consuming components that operate in typical room conditions (including as a result of door openings, or a function of humidity), and that are not exempted by this test procedure, shall operate in an equivalent manner during energy testing under this test procedure, or be accounted for by all calculations as provided for in the test procedure. If:

(i) A product contains energy consuming components that operate differently during the prescribed testing than they would during representative average consumer use and

(ii) Applying the prescribed test to that product would evaluate it in a manner that is unrepresentative of its true energy consumption (thereby providing materially inaccurate comparative data), a manufacturer must obtain a waiver in accordance with the relevant provisions of 10 CFR part 430. Examples:

A. Energy saving features that are designed to be activated by a lack of door openings hall not be functional during the energy test.

B. The defrost heater should not either function or turn off differently during the energy test than it would when in typical room conditions.

C. Electric heaters that would normally operate at typical room conditions with door openings should also operate during the energy test.

D. Energy used during adaptive defrost shall continue to be tested and adjusted per the calculation provided for in this test procedure.

(c) *Dishwashers.* (1) The Estimated Annual Operating Cost (EAOC) for dishwashers must be rounded to the nearest dollar per year and is defined as follows:

(i) When cold water (50 °F) is used,

(A) When using appendix C (see the note at the beginning of appendix C), for dishwashers having a truncated normal cycle as defined in section 1.15 of appendix C to this subpart, EAOC = $(D_e \times S) + (D_e \times N \times (M - (E_D/2)))$.

(B) When using appendix C1 (see the note at the beginning of appendix C1), for dishwashers having a truncated normal cycle as defined in section 1.22 of appendix C1 to this subpart, EAOC = $(D_e \times E_{TLP}) + (D_e \times N \times (M + M_{WS} + E_F - (E_D/2)))$.

(C) When using appendix C (see the note at the beginning of appendix C), for dishwashers not having a truncated normal cycle, EAOC = $(D_e \times S) + (D_e \times N \times M)$.

(D) When using appendix C1 (see the note at the beginning of appendix C1), for dishwashers not having a truncated normal cycle, EAOC = $(D_e \times E_{TLP}) + (D_e \times N \times (M + M_{WS} + E_F))$.

Where,

D_e = the representative average unit cost of electrical energy, in dollars per kilowatt-hour, as provided by the Secretary,

S = the estimated annual standby energy consumption in kilowatt-hours per year and determined according to section 5.6 of appendix C to this subpart,

E_{TLP} = the annual combined low-power mode energy consumption in kilowatt-hours per year and determined according to section 5.7 of appendix C1 to this subpart,

N = the representative average dishwasher use of 215 cycles per year,

M = the machine energy consumption per cycle for the normal cycle, as defined in section 1.6 of appendix C to this subpart, in kilowatt-hours and determined according to section 5.1 of appendix C to this subpart when using appendix C (see the note at the beginning of appendix C); the normal cycle is defined in section 1.12 of appendix C1 to this subpart, and the machine energy consumption per cycle in kilowatt-hours must be determined according to section 5.1.1 of appendix C1 to this subpart for non-soil-sensing dishwashers and section 5.1.2 of appendix C1 to this subpart for soil-sensing dishwashers when using appendix C1 (see the note at the beginning of appendix C1),

M_{WS} = the machine energy consumption per cycle for water softener regeneration, in kilowatt-hours and determined according to section 5.1.3 of appendix C1 to this subpart,

E_F = the fan-only mode energy consumption per cycle, in kilowatt-hours and determined according to section 5.2 of appendix C1 to this subpart, and

E_D = the drying energy consumption, in kilowatt-hours and defined as energy consumed using the power-dry feature after the termination of the last rinse option of the normal cycle; E_D is determined according to section 5.2 of appendix C to this subpart when using appendix C (see the note at the beginning of appendix C), and determined according to section 5.3 of appendix C1 to this subpart when using appendix C1 (see the note at the beginning of appendix C1),

(E) Manufacturers calculating EAOC pursuant to paragraph (c)(1)(i)(A) of this section should calculate EAEU pursuant to paragraph (c)(2)(i)(A) of this section. Manufacturers calculating EAOC pursuant to paragraphs (c)(1)(i)(B) of this section should calculate EAEU pursuant to paragraph (c)(2)(i)(B) of this section. Manufacturers calculating EAOC pursuant to paragraph (c)(1)(i)(C) of this section should calculate EAEU pursuant to paragraph (c)(2)(ii)(A) of this section. Manufacturers calculating EAOC pursuant to paragraph (c)(1)(i)(D) of this section should calculate EAEU pursuant to paragraph (c)(2)(ii)(B) of this section.

(ii) When electrically-heated water (120 °F or 140 °F) is used,

(A) When using appendix C (see the note at the beginning of appendix C), for dishwashers having a truncated normal cycle as defined in section 1.15 of appendix C to this subpart, EAOC = $(D_e \times S) + (D_e \times N \times (M - (E_D/2))) + (D_e \times N \times W)$.

(B) When using appendix C1 (see the note at the beginning of appendix C1), for dishwashers having a truncated normal cycle as defined in section 1.22 of appendix C1 to this subpart, EAOC = $(D_e \times E_{TLP}) + (D_e \times N \times (M + M_{WS} + E_F - (E_D/2))) + (D_e \times N \times (W + W_{WS}))$.

(C) When using appendix C (see the note at the beginning of appendix C), for dishwashers not having a truncated normal cycle, EAOC = $(D_e \times S) + (D_e \times N \times M) + (D_e \times N \times W)$.

(D) When using appendix C1 (see the note at the beginning of appendix C1), for dishwashers not having a truncated normal cycle, EAOC = $(D_e \times E_{TLP}) + (D_e \times N \times (M + M_{WS} + E_F)) + (D_e \times N \times (W + W_{WS}))$.

Where,

D_e, S, E_{TLP}, N, M, M_{WS}, E_F, and E_D, are defined in paragraph (c)(1)(i) of this section,

W = the water energy consumption per cycle for the normal cycle as defined in section 1.6 of appendix C to this subpart, in kilowatt-hours and determined according to section 5.4 of appendix C to this subpart when using appendix C (see the note at the beginning of appendix C); when using appendix C1 (see the note at the beginning of appendix C1), the normal cycle is as defined in section 1.12 of appendix C1 to this subpart, and the water energy consumption per cycle in kilowatt-hours is determined according to section 5.5.1.1 of appendix C1 to this subpart for dishwashers that operate with a nominal 140 °F inlet water temperature and section 5.5.2.1 of appendix C1 to this subpart for dishwashers that operate with a nominal inlet water temperature of 120 °F, and

W_{WS} = the water softener regeneration water energy consumption per cycle in kilowatt-hours and determined according to section 5.5.1.2 of appendix C1 to this subpart for dishwashers that operate with a nominal 140 °F inlet water temperature and section 5.5.2.2 of appendix C1 to this subpart for dishwashers that operate with a nominal inlet water temperature of 120 °F.

(E) Manufacturers calculating EAOC pursuant to paragraph (c)(1)(ii)(A) of this section should calculate EAEU pursuant to paragraph (c)(2)(i)(A) of this section. Manufacturers calculating EAOC pursuant to paragraphs (c)(1)(ii)(B) of this section should calculate EAEU pursuant to paragraph (c)(2)(i)(B) of this section. Manufacturers calculating EAOC pursuant to paragraph (c)(1)(ii)(C) of this section should calculate EAEU pursuant to paragraph (c)(2)(ii)(A) of this section. Manufacturers calculating EAOC pursuant to paragraph (c)(1)(ii)(D) of this section should calculate EAEU pursuant to paragraph (c)(2)(ii)(B) of this section.

(iii) When gas-heated or oil-heated water is used,

(A) When using appendix C (see the note at the beginning of appendix C), for dishwashers having a truncated normal cycle as defined in section 1.15 of appendix C to this subpart, $EAOC_g = (D_e \times S) + (D_e \times N \times (M - (E_D/2))) + (D_g \times N \times W_g)$.

(B) When using appendix C1 (see the note at the beginning of appendix C1), for dishwashers having a truncated normal cycle as defined in section 1.22 of appendix C1 to this subpart, $EAOC_g = (D_e \times E_{TLP}) + (D_e \times N \times (M + M_{WS} + E_F - (E_D/2))) + (D_g \times N \times (W_g + W_{WSg}))$.

(C) When using appendix C (see the note at the beginning of appendix C), for dishwashers not having a truncated normal cycle, $EAOC_g = (D_e \times S) + (D_e \times N \times M) + (D_g \times N \times W_g)$.

(D) When using appendix C1 (see the note at the beginning of appendix C1), for dishwashers not having a truncated normal cycle, $EAOC_g = (D_e \times E_{TLP}) + (D_e \times N \times (M + M_{WS} + E_F)) + (D_g \times N \times (W_g + W_{WSg}))$.

Where,

D_e, S, E_{TLP}, N, M, M_{WS}, E_F, and E_D are defined in paragraph (c)(1)(i) of this section,

D_g = the representative average unit cost of gas or oil, as appropriate, in dollars per Btu, as provided by the Secretary,

W_g = the water energy consumption per cycle for the normal cycle as defined in section 1.6 of appendix C to this subpart, in Btus and determined according to section 5.5 of appendix C to this subpart when using appendix C (see the note at the beginning of appendix C); when using appendix C1 (see the note at the beginning of appendix C1), the normal cycle is as defined in section 1.12 of appendix C1 to this subpart, and the water energy consumption per cycle in Btus is determined according to section 5.6.1.1 of appendix C1 to this subpart for dishwashers that operate with a nominal 140 °F inlet water temperature and section 5.6.2.1 of appendix C1 to this subpart for dishwashers that operate with a nominal inlet water temperature of 120 °F and

W_{WSg} = the water softener regeneration energy consumption per cycle in Btu per cycle and determined according to section 5.6.1.2 of appendix C1 to this subpart for dishwashers that operate with a nominal 140 °F inlet water temperature and section 5.6.2.2 of appendix C1 to this subpart for dishwashers that operate with a nominal inlet water temperature of 120 °F.

(E) Manufacturers calculating EAOC pursuant to paragraph (c)(1)(iii)(A) of this section should calculate EAEU pursuant to paragraph (c)(2)(i)(A) of this section. Manufacturers calculating EAOC pursuant to paragraphs (c)(1)(iii)(B) of this section should calculate EAEU pursuant to paragraph (c)(2)(i)(B) of this section. Manufacturers calculating EAOC pursuant to paragraph (c)(1)(iii)(C) of this section should calculate EAEU pursuant to paragraph (c)(2)(ii)(A) of this section. Manufacturers calculating EAOC pursuant to paragraph (c)(1)(iii)(D) of this section should calculate EAEU pursuant to paragraph (c)(2)(ii)(B) of this section.

(2) The estimated annual energy use, EAEU, expressed in kilowatt-hours per year must be rounded to the nearest kilowatt-hour per year and is defined as follows:

(i) When using appendix C (see the note at the beginning of appendix C), for dishwashers having a truncated normal cycle as defined in section 1.15 of appendix C to this subpart and when using appendix C1 (see the note at the beginning of appendix C), as defined in section 1.22 of appendix C1 to this subpart,

(A) $EAEU = (M - (E_D/2) + W) \times N + S$ may be used for units manufactured:

(*1*) Before April 29, 2013 to make representations of energy efficiency; and

(*2*) Before the compliance date of any amended standards to demonstrate compliance.

(B) $EAEU = (M + M_{WS} + E_F - (E_D/2) + W + W_{WS}) \times N + (E_{TLP})$ must be used for units manufactured:

(*1*) On or after April 29, 2013 to make representations of energy efficiency; and

(*2*) On or after the compliance date of any amended standards to demonstrate compliance.

Where,

M, M_{WS}, S, E_D, N, E_F, and E_{TLP} are defined in paragraph (c)(1)(i) of this section, and W and W_{WS}, are defined in paragraph (c)(1)(ii) of this section.

(C) Manufacturers calculating EAEU pursuant to paragraph (c)(2)(i)(A) of this section should calculate EAOC pursuant to paragraph (c)(1)(i)(A), (c)(1)(ii)(A), or (c)(1)(iii)(A) of this section, as appropriate. Manufacturers calculating EAEU pursuant to paragraph (c)(2)(i)(B) of this section should calculate EAOC pursuant to paragraph (c)(1)(i)(B), (c)(1)(ii)(B), or (c)(1)(iii)(B) of this section, as appropriate.

(ii) For dishwashers not having a truncated normal cycle:

(A) EAEU = (M + W) × N + S may be used for units manufactured:

(*1*) Before April 29, 2013 to make representations of energy efficiency; and

(*2*) Before the compliance date of any amended standards to demonstrate compliance.

(B) EAEU = $(M + M_{WS} + E_F + W + W_{WS}) \times N + E_{TLP}$ must be used for units manufactured:

(*1*) On or after April 29, 2013 to make representations of energy efficiency; and

(*2*) On or after the compliance date of any amended standards to demonstrate compliance.

Where,

M, M_{WS}, S, N, E_F, and E_{TLP} are defined in paragraph (c)(1)(i) of this section, and W and W_{WS} are defined in paragraph (c)(1)(ii) of this section.

(C) Manufacturers calculating EAEU pursuant to paragraph (c)(2)(ii)(A) of this section should calculate EAOC pursuant to paragraph (c)(1)(i)(C), (c)(1)(ii)(C), or (c)(1)(iii)(C) of this section, as appropriate. Manufacturers calculating EAEU pursuant to paragraph (c)(2)(ii)(B) of this section should calculate EAOC pursuant to paragraph (c)(1)(i)(D), (c)(1)(ii)(D), or (c)(1)(iii)(D) of this section, as appropriate.

(3) When using appendix C (see the note at the beginning of appendix C), the water consumption, V, expressed in gallons per cycle and defined in section 5.3 of appendix C to this subpart, and when using appendix C1 (see the note at the beginning of appendix C1), water consumption, V, and the sum of the water consumption, V, and the water consumption during water softener regeneration, V_{WS}, expressed in gallons per cycle and defined in section 5.4 of appendix C1 to this subpart, must be rounded to one decimal place.

(i) Water consumption, V, may be measured for units manufactured:

(A) Before April 29, 2013 to make representations of energy efficiency; and

(B) Before the compliance date of any amended standards to demonstrate compliance.

(ii) Manufacturers calculating water consumption pursuant to paragraph (c)(3)(i) of this section should calculate EAOC as described in paragraph (c)(1)(i)(A), (c)(1)(i)(C), (c)(1)(ii)(A), (c)(1)(ii)(C), (c)(1)(iii)(A), or (c)(1)(iii)(C) of this section, as appropriate. Manufacturers calculating water consumption pursuant to paragraph (c)(3)(i) of this section should calculate EAEU as described in paragraph (c)(2)(i)(A) or (c)(2)(ii)(A) of this section, as appropriate.

(iii) The sum of the water consumption, V, and the water consumption during water softener regeneration, V_{WS}, must be measured for units manufactured:

(A) On or after April 29, 2013 to make representations of energy efficiency; and

(B) On or after the compliance date of any amended standards to demonstrate compliance.

(C) Manufacturers calculating water consumption pursuant to paragraph (c)(3)(iii) of this section should calculate EAOC as described in paragraph (c)(1)(i)(B), (c)(1)(i)(D), (c)(1)(ii)(B), (c)(1)(ii)(D), (c)(1)(iii)(B), or (c)(1)(iii)(D) of this section, as appropriate. Manufacturers calculating water consumption pursuant to paragraph (c)(3)(iii) of this section should calculate EAEU as described in paragraph (c)(2)(i)(B) or (c)(2)(ii)(B) of this section, as appropriate.

(4) Other useful measures of energy consumption for dishwashers are those which the Secretary determines are

likely to assist consumers in making purchasing decisions and which are derived from the application of appendix C and appendix C1 to this subpart.

(d) *Clothes dryers.* (1) The estimated annual operating cost for clothes dryers shall be—

(i) For an electric clothes dryer, the product of the following three factors:

(A) The representative average-use cycle of 283 cycles per year,

(B) The per-cycle combined total energy consumption in kilowatt-hours per-cycle, determined according to 4.6 of appendix D1 to this subpart, and

(C) The representative average unit cost of electrical energy in dollars per kilowatt-hour as provided by the Secretary, the resulting product then being rounded off to the nearest dollar per year, and

(ii) For a gas clothes dryer, the product of the representative average-use cycle of 283 cycles per year times the sum of:

(A) The product of the per-cycle gas dryer electric energy consumption in kilowatt-hours per cycle, determined according to 4.2 of appendix D1 to this subpart, times the representative average unit cost of electrical energy in dollars per kilowatt-hour as provided by the Secretary plus,

(B) The product of the per-cycle gas dryer gas energy consumption, in Btus per cycle, determined according to 4.3 of appendix D1 to this subpart, times the representative average unit cost for natural gas or propane, as appropriate, in dollars per Btu as provided by the Secretary, the resulting product then being rounded off to the nearest dollar per year plus,

(C) The product of the per-cycle standby mode and off mode energy consumption in kilowatt-hours per cycle, determined according to 4.5 of appendix D1 to this subpart, times the representative average unit cost of electrical energy in dollars per kilowatt-hour as provided by the Secretary.

(2) The energy factor, expressed in pounds of clothes per kilowatt-hour, for clothes dryers shall be either the quotient of a 3-pound bone-dry test load for compact dryers, as defined by 2.7.1 of appendix D to this subpart before the date that appendix D1 becomes mandatory, or the quotient of a 7-pound bone-dry test load for standard dryers, as defined by 2.7.2 of appendix D to this subpart before the date that appendix D1 becomes mandatory, as applicable, divided by the clothes dryer energy consumption per cycle, as determined according to 4.1 for electric clothes dryers and 4.6 for gas clothes dryers of appendix D to this subpart before the date that appendix D1 becomes mandatory, the resulting quotient then being rounded off to the nearest hundredth (.01). Upon the date that appendix D1 to this subpart becomes mandatory, the energy factor is determined in accordance with 4.7 of appendix D1, the result then being rounded off to the nearest hundredth (.01).

(3) Upon the date that appendix D1 to this subpart becomes mandatory, the combined energy factor is determined in accordance with 4.8 of appendix D1, the result then being rounded off to the nearest hundredth (.01).

(4) Other useful measures of energy consumption for clothes dryers shall be those measures of energy consumption for clothes dryers which the Secretary determines are likely to assist consumers in making purchasing decisions and which are derived from the application of appendix D to this subpart before the date that appendix D1 becomes mandatory and appendix D1 upon the date that appendix D1 to this subpart becomes mandatory.

(e) *Water Heaters.* (1) The estimated annual operating cost for water heaters shall be—

(i) For a gas or oil water heater, the product of the annual energy consumption, determined according to section 6.1.8 or 6.2.5 of appendix E of this subpart, times the representative average unit cost of gas or oil, as appropriate, in dollars per Btu as provided by the Secretary, the resulting product then being rounded off to the nearest dollar per year.

(ii) For an electric water heater, the product of the annual energy consumption, determined according to section 6.1.8 or 6.2.5 of appendix E of this subpart, times the representative average unit cost of electricity in dollars per kilowatt-hour as provided by the Secretary, divided by 3412 Btu per kilowatt-hour, the resulting quotient then

being rounded off to the nearest dollar per year.

(2) The energy factor for the water heaters shall be—

(i) For a gas or oil water heater, as determined by section 6.1.7 or 6.2.4 of appendix E of this subpart rounded off to the nearest 0.01.

(ii) For an electric water heater, as determined by section 6.1.7 or 6.2.4 of appendix E of this subpart rounded off to the nearest 0.01.

(3) Other useful measures of energy consumption for water heaters shall be those measures of energy consumption for water heaters which the Secretary determines are likely to assist consumers in making purchasing decisions and which are derived from the application of appendix E of this subpart.

(4) The alternative uniform test method for measuring the energy consumption of untested water heaters shall be that set forth in section 7.0 of appendix E of this subpart.

(f) *Room air conditioners.* (1) The estimated annual operating cost for room air conditioners, expressed in dollars per year, shall be determined by multiplying the following three factors:

(i) The combined annual energy consumption for room air conditioners, expressed in kilowatt-hours per year, as determined in accordance with paragraph (f)(4) of this section, and

(ii) A representative average unit cost of electrical energy in dollars per kilowatt-hour as provided by the Secretary, the resulting product then being rounded off to the nearest dollar per year.

(2) The energy efficiency ratio for room air conditioners, expressed in Btus per watt-hour, shall be the quotient of:

(i) The cooling capacity in Btus per hour as determined in accordance with 5.1 of appendix F to this subpart divided by:

(ii) The electrical input power in watts as determined in accordance with 5.2 of appendix F to this subpart, the resulting quotient then being rounded off to the nearest 0.1 Btu per watt-hour.

(3) The average annual energy consumption for room air conditioners, expressed in kilowatt-hours per year, shall be determined by multiplying together the following two factors:

(i) Electrical input power in kilowatts as determined in accordance with 5.2 of appendix F to this subpart, and

(ii) The representative average-use cycle of 750 hours of compressor operation per year, the resulting product then being rounded off to the nearest kilowatt-hour per year.

(4) The combined annual energy consumption for room air conditioners, expressed in kilowatt-hours per year, shall be the sum of:

(i) The average annual energy consumption as determined in accordance with paragraph (f)(4) of this section, and

(ii) The standby mode and off mode energy consumption, as determined in accordance with 5.3 of appendix F to this subpart, the resulting sum then being rounded off to the nearest kilowatt-hour per year.

(5) The combined energy efficiency ratio for room air conditioners, expressed in Btu's per watt-hour, shall be the quotient of:

(i) The cooling capacity in Btus per hour as determined in accordance with 5.1 of appendix F to this subpart multiplied by the representative average-use cycle of 750 hours of compressor operation per year, divided by

(ii) The combined annual energy consumption as determined in accordance with paragraph (f)(4) of this section multiplied by a conversion factor of 1,000 to convert kilowatt-hours to watt-hours, the resulting quotient then being rounded off to the nearest 0.1 Btu per watt-hour.

(g) *Unvented home heating equipment.* (1) The estimated annual operating cost for primary electric heaters, shall be the product of: (i) The average annual electric energy consumption in kilowatt-hours per year, determined according to section 3.1 of appendix G of this subpart and (ii) the representative average unit cost in dollars per kilowatt-hour as provided pursuant to section 323(b)(2) of the Act, the resulting product then being rounded off to the nearest dollar per year.

(2) The estimated regional annual operating cost for primary electric heaters, shall be the product of: (i) The regional annual electric energy consumption in kilowatt-hours per year for primary heaters determined according to section 3.2 of appendix G of this subpart and (ii) the representative average unit cost in dollars per kilowatt-hour as provided pursuant to section 323(b)(2) of the Act, the resulting product then being rounded off to the nearest dollar per year.

(3) The estimated operating cost per million Btu output shall be—

(i) For primary and supplementary electric heaters and unvented gas and oil heaters without an auxiliary electric system, the product of: (A) One million; and (B) the representative unit cost in dollars per Btu for natural gas, propane, or oil, as provided pursuant to section 323(b)(2) of the Act as appropriate, or the quotient of the representative unit cost in dollars per kilowatt-hour, as provided pursuant to section 323(b)(2) of the Act, divided by 3,412 Btu per kilowatt hour, the resulting product then being rounded off to the nearest 0.01 dollar per million Btu output; and

(ii) For unvented gas and oil heaters with an auxiliary electric system, the product of: (A) The quotient of one million divided by the rated output in Btu's per hour as determined in 3.4 of appendix G of this subpart; and (B) the sum of: (*1*) The product of the maximum fuel input in Btu's per hour as determined in 2.2. of this appendix times the representative unit cost in dollars per Btu for natural gas, propane, or oil, as appropriate, as provided pursuant to section 323(b)(2) of the Act, plus (*2*) the product of the maximum auxiliary electric power in kilowatts as determined in 2.1 of appendix G of this subpart times the representative unit cost in dollars per kilowatt-hour as provided pursuant to section 323(b)(2) of the Act, the resulting quantity shall be rounded off to the nearest 0.01 dollar per million Btu output.

(4) The rated output for unvented heaters is the rated output as determined according to either sections 3.3 or 3.4 of appendix G of this subpart, as appropriate, with the result being rounded to the nearest 100 Btu per hour.

(5) Other useful measures of energy consumption for unvented home heating equipment shall be those measures of energy consumption for unvented home heating equipment which the Secretary determines are likely to assist consumers in making purchasing decisions and which are derived from the application of appendix G of this subpart.

(h) *Television sets.* The power consumption of a television set, expressed in watts, including on mode, standby mode, and off mode power consumption values, shall be measured in accordance with sections 7.1, 7.3, and 7.4 of appendix H of this subpart respectively. The annual energy consumption, expressed in kilowatt-hours per year, shall be measured in accordance with section 8 of appendix H of this subpart.

(i) *Kitchen ranges and ovens.* (1) The estimated annual operating cost for conventional ranges, conventional cooking tops, and conventional ovens shall be the sum of the following products:

(i) The total integrated annual electrical energy consumption for any electrical energy usage, in kilowatt-hours (kWhs) per year, times the representative average unit cost for electricity, in dollars per kWh, as provided pursuant to section 323(b)(2) of the Act; plus

(ii) The total annual gas energy consumption for any natural gas usage, in British thermal units (Btus) per year, times the representative average unit cost for natural gas, in dollars per Btu, as provided pursuant to section 323(b)(2) of the Act; plus

(iii) The total annual gas energy consumption for any propane usage, in Btus per year, times the representative average unit cost for propane, in dollars per Btu, as provided pursuant to section 323(b)(2) of the Act. The total annual energy consumption for conventional ranges, conventional cooking tops, and conventional ovens shall be as determined according to sections 4.3, 4.2.2, and 4.1.2, respectively, of appendix I to this subpart. For conventional gas cooking tops, total integrated annual electrical energy consumption

shall be equal to E_{CTSO}, defined in section 4.2.2.2.4 of appendix I to this subpart. The estimated annual operating cost shall be rounded off to the nearest dollar per year.

(2) The cooking efficiency for conventional cooking tops and conventional ovens shall be the ratio of the cooking energy output for the test to the cooking energy input for the test, as determined according to sections 4.2.1 and 4.1.3, respectively, of appendix I to this subpart. The final cooking efficiency values shall be rounded off to three significant digits.

(3) The standby power for microwave ovens shall be determined according to 3.2.3 of appendix I to this subpart. The standby power shall be rounded off to the nearest 0.1 watt.

(4) The energy factor for conventional ranges, conventional cooking tops, and conventional ovens shall be the ratio of the annual useful cooking energy output to the total annual energy input, as determined according to sections 4.3, 4.2.3.1, and 4.1.4.1, respectively, of appendix I to this subpart. The final energy factor values shall be rounded off to three significant digits.

(5) The integrated energy factor for conventional ranges, conventional cooking tops, and conventional ovens shall be the ratio of the annual useful cooking energy output to the total integrated annual energy input, as determined according to sections 4.3, 4.2.3.2, and 4.1.4.2, respectively, of appendix I to this subpart. The final integrated energy factor values shall be rounded off to three significant digits.

(6) There shall be two estimated annual operating costs, two cooking efficiencies, and two energy factors for convertible cooking appliances—

(i) An estimated annual operating cost, a cooking efficiency, and an energy factor which represent values for those three measures of energy consumption for the operation of the appliance with natural gas; and

(ii) An estimated annual operating cost, a cooking efficiency, and an energy factor which represent values for those three measures of energy consumption for the operation of the appliance with LP-gas.

(7) There shall be two integrated energy factors for convertible cooking appliances—

(i) An integrated energy factor which represents the value for this measure of energy consumption for the operation of the appliance with natural gas; and

(ii) An integrated energy factor which represents the value for this measure of energy consumption for the operation of the appliance with LP-gas.

(8) The estimated annual operating cost for convertible cooking appliances which represents natural gas usage, as described in paragraph (i)(6)(i) of this section, shall be determined according to paragraph (i)(1) of this section using the total annual gas energy consumption for natural gas times the representative average unit cost for natural gas.

(9) The estimated annual operating cost for convertible cooking appliances which represents LP-gas usage, as described in paragraph (i)(6)(ii) of this section, shall be determined according to paragraph (i)(1) of this section using the representative average unit cost for propane times the total annual energy consumption of the test gas, either propane or natural gas.

(10) The cooking efficiency for convertible cooking appliances which represents natural gas usage, as described in paragraph (i)(6)(i) of this section, shall be determined according to paragraph (i)(2) of this section when the appliance is tested with natural gas.

(11) The cooking efficiency for convertible cooking appliances which represents LP-gas usage, as described in paragraph (i)(6)(ii) of this section, shall be determined according to paragraph (i)(2) of this section, when the appliance is tested with either natural gas or propane.

(12) The energy factor for convertible cooking appliances which represents natural gas usage, as described in paragraph (i)(6)(i) of this section, shall be determined according to paragraph (i)(4) of this section when the appliance is tested with natural gas.

(13) The integrated energy factor for convertible cooking appliances which represents natural gas usage, as described in paragraph (i)(7)(i) of this section, shall be determined according to

paragraph (i)(5) of this section when the appliance is tested with natural gas.

(14) The energy factor for convertible cooking appliances which represents LP-gas usage, as described in paragraph (i)(6)(ii) of this section, shall be determined according to paragraph (i)(4) of this section when the appliance is tested with either natural gas or propane.

(15) The integrated energy factor for convertible cooking appliances which represents LP-gas usage, as described in paragraph (i)(7)(ii) of this section, shall be determined according to paragraph (i)(5) of this section when the appliance is tested with natural gas or propane.

(16) Other useful measures of energy consumption for conventional ranges, conventional cooking tops, and conventional ovens shall be those measures of energy consumption which the Secretary determines are likely to assist consumers in making purchasing decisions and which are derived from the application of appendix I to this subpart.

(j) *Clothes washers.* (1) The estimated annual operating cost for automatic and semi-automatic clothes washers must be rounded off to the nearest dollar per year and is defined as follows:

(i) When using appendix J1 (see the note at the beginning of appendix J1),

(A) When electrically heated water is used,

$$(N_1 \times E_{TE1} \times C_{KWH})$$

Where:

N_1 = the representative average residential clothes washer use of 392 cycles per year according to appendix J1,

E_{TE1} = the total per-cycle energy consumption when electrically heated water is used, in kilowatt-hours per cycle, determined according to section 4.1.7 of appendix J1, and

C_{KWH} = the representative average unit cost, in dollars per kilowatt-hour, as provided by the Secretary.

(B) When gas-heated or oil-heated water is used,

$$(N_1 \times ((ME_{T1} \times C_{KWH}) + (HE_{TG1} \times C_{BTU})))$$

Where:

N_1 and C_{KWH} are defined in paragraph (j)(1)(i)(A) of this section,

ME_{T1} = the total weighted per-cycle machine electrical energy consumption, in kilowatt-hours per cycle, determined according to section 4.1.6 of appendix J1,

HE_{TG1} = the total per-cycle hot water energy consumption using gas-heated or oil-heated water, in Btu per cycle, determined according to section 4.1.4 of appendix J1, and

C_{BTU} = the representative average unit cost, in dollars per Btu for oil or gas, as appropriate, as provided by the Secretary.

(ii) When using appendix J2 (see the note at the beginning of appendix J2),

(A) When electrically heated water is used,

$$(N_2 \times (E_{TE2} + E_{TSO}) \times C_{KWH})$$

Where:

N_2 = the representative average residential clothes washer use of 295 cycles per year according to appendix J2,

E_{TE2} = the total per-cycle energy consumption when electrically heated water is used, in kilowatt-hours per cycle, determined according to section 4.1.7 of appendix J2,

E_{TSO} = the per-cycle combined low-power mode energy consumption, in kilowatt-hours per cycle, determined according to section 4.4 of appendix J2, and

C_{KWH} = the representative average unit cost, in dollars per kilowatt-hour, as provided by the Secretary.

(B) When gas-heated or oil-heated water is used,

$$(N_2 \times ((ME_{T2} + E_{TSO}) \times C_{KWH}) + (HE_{TG2} \times C_{BTU}))$$

Where:

N_2 and E_{TSO} are defined in (j)(1)(ii)(A) of this section,

ME_{T2} = the total weighted per-cycle machine electrical energy consumption, in kilowatt-hours per cycle, determined according to section 4.1.6 of appendix J2,

C_{KWH} = the representative average unit cost, in dollars per kilowatt-hour, as provided by the Secretary,

HE_{TG2} = the total per-cycle hot water energy consumption using gas-heated or oil-heated water, in Btu per cycle, determined according to section 4.1.4 of appendix J2,

C_{BTU} = the representative average unit cost, in dollars per Btu for oil or gas, as appropriate, as provided by the Secretary.

(2)(i) The modified energy factor for automatic and semi-automatic clothes washers is determined according to section 4.4 of appendix J1 (when using appendix J1) and section 4.5 of appendix J2 (when using appendix J2). The result shall be rounded off to the nearest 0.01 cubic foot per kilowatt-hour per cycle.

(ii) The integrated modified energy factor for automatic and semi-automatic clothes washers is determined according to section 4.6 of appendix J2 (when using appendix J2). The result shall be rounded off to the nearest 0.01 cubic foot per kilowatt-hour per cycle.

(3) Other useful measures of energy consumption for automatic or semi-automatic clothes washers shall be those measures of energy consumption which the Secretary determines are likely to assist consumers in making purchasing decisions and which are derived from the application of appendix J1 or appendix J2, as appropriate. In addition, the annual water consumption of a clothes washer can be determined as:

(i) When using appendix J1, the product of the representative average-use of 392 cycles per year and the total weighted per-cycle water consumption in gallons per cycle determined according to section 4.2.2 of appendix J1. The water factor can be determined according to section 4.2.3 of appendix J1, with the result rounded off to the nearest 0.1 gallons per cycle per cubic foot. The remaining moisture content can be determined according to section 3.8 of appendix J1, with the result rounded off to the nearest 0.1 percent.

(ii) When using appendix J2, the product of the representative average-use of 295 cycles per year and the total weighted per-cycle water consumption for all wash cycles, in gallons per cycle, determined according to section 4.2.11 of appendix J2. The water factor can be determined according to section 4.2.12 of appendix J2, with the result rounded off to the nearest 0.1 gallons per cycle per cubic foot. The integrated water factor can be determined according to section 4.2.13 of appendix J2, with the result rounded off to the nearest 0.1 gallons per cycle per cubic foot. The remaining moisture content can be determined according to section 3.8 of appendix J2, with the result rounded off to the nearest 0.1 percent.

(k)–(l) [Reserved]

(m) *Central Air Conditioners and heat pumps.* (1) The estimated annual operating cost for cooling-only units and air-source heat pumps shall be one of the following:

(i) For cooling-only units or the cooling portion of the estimated annual operating cost for air-source heat pumps which provide both heating and cooling, the product of:

(A) The quotient of the cooling capacity, in Btu's per hour, determined from the steady-state wet-coil test (A or A_2 Test), as described in section 3.2 of appendix M to this subpart, divided by the seasonal energy efficiency ratio (SEER), in Btu's per watt-hour, determined from section 4.1 of appendix M to this subpart;

(B) The representative average use cycle for cooling of 1,000 hours per year;

(C) A conversion factor of 0.001 kilowatt per watt; and

(D) The representative average unit cost of electricity in dollars per kilowatt-hour as provided pursuant to section 323(b)(2) of the Act, the resulting product then being rounded off to the nearest dollar per year.

(ii) For air-source heat pumps which provide only heating or the heating portion of the estimated annual operating cost for air-source heat pumps which provide both heating and cooling, the product of:

(A) The quotient of the standardized design heating requirement, in Btu's per hour, nearest to the heating Region IV minimum design heating requirement, determined in section 4.2 of appendix M to this subpart, divided by the heating seasonal performance factor (HSPF), in Btu's per watt-hour, calculated for heating Region IV corresponding to the above-mentioned standardized design heating requirement and determined in section 4.2 of appendix M to this subpart;

(B) The representative average use cycle for heating of 2,080 hours per year;

(C) The adjustment factor of 0.77 which serves to adjust the calculated design heating requirement and heating load hours to the actual load experienced by a heating system;

(D) A conversion factor of 0.001 kilowatt per watt; and

(E) The representative average unit cost of electricity in dollars per kilowatt-hour as provided pursuant to section 323(b)(2) of the Act, the resulting

product then being rounded off to the nearest dollar per year.

(iii) For air-source heat pumps which provide both heating and cooling, the estimated annual operating cost is the sum of the quantity determined in paragraph (m)(1)(i) of this section added to the quantity determined in paragraph (m)(1)(ii) of this section.

(2) The estimated regional annual operating cost for cooling-only units and for air-source heat pumps shall be one of the following:

(i) For cooling-only units or the cooling portion of the estimated regional annual operating cost for air-source heat pumps which provide both heating and cooling, the product of:

(A) The quotient of the cooling capacity, in Btu's per hour, determined from the steady-state wet-coil test (A or A_2 Test), as described in section 3.2 of appendix M to this subpart, divided by the seasonal energy efficiency ratio (SEER), in Btu's per watt-hour, determined from section 4.1 of appendix M to this subpart;

(B) The estimated number of regional cooling load hours per year determined from Figure 3 in section 4.3 of appendix M to this subpart;

(C) A conversion factor of 0.001 kilowatts per watt; and

(D) The representative average unit cost of electricity in dollars per kilowatt-hour as provided pursuant to section 323(b)(2) of the Act, the resulting product then being rounded off to the nearest dollar per year.

(ii) For air-source heat pumps which provide only heating or the heating portion of the estimated regional annual operating cost for air-source heat pumps which provide both heating and cooling, the product of:

(A) The estimated number of regional heating load hours per year determined from Figure 2 in section 4.3 of appendix M to this subpart;

(B) The quotient of the standardized design heating requirement, in Btu's per hour, for the appropriate generalized climatic region of interest (*i.e.*, corresponding to the regional heating load hours from ''A'') and determined in section 4.2 of appendix M to this subpart, divided by the heating seasonal performance factor (HSPF), in Btu's per watt-hour, calculated for the appropriate generalized climatic region of interest and corresponding to the above-mentioned standardized design heating requirement while being determined in section 4.2 of appendix M to this subpart;

(C) The adjustment factor of 0.77 which serves to adjust the calculated design heating requirement and heating load hours to the actual load experienced by a heating system;

(D) A conversion factor of 0.001 kilowatts per watt; and

(E) The representative average unit cost of electricity in dollars per kilowatt-hour as provided pursuant to section 323(b)(2) of the Act, the resulting product then being rounded off to the nearest dollar per year.

(iii) For air-source heat pumps which provide both heating and cooling, the estimated regional annual operating cost is the sum of the quantity determined in paragraph (m)(3)(i) of this section added to the quantity determined in paragraph (m)(3)(ii) of this section.

(3) The measure(s) of efficiency of performance for cooling-only units and air-source heat pumps shall be one or more of the following:

(i) The cooling mode efficiency measure for cooling-only units and air-source heat pumps which provide cooling shall be the seasonal energy efficiency ratio (SEER), in Btu's per watt-hour, determined according to section 4.1 of appendix M to this subpart, rounded off to the nearest 0.05.

(ii) The heating mode efficiency measure for air-source heat pumps shall be the heating seasonal performance factors (HSPF), in Btu's per watt-hour, determined according to section 4.2 of appendix M to this subpart for each applicable standardized design heating requirement within each climatic region, rounded off to the nearest 0.05.

(iii) The annual efficiency measure for air-source heat pumps which provide heating and cooling, shall be the annual performance factors (APF), in Btu's per watt-hour, determined according to section 4.3 of appendix M to this subpart for each standardized design heating requirement within each climatic region, rounded off to the nearest 0.05.

(4) The average off mode power consumption for central air conditioners and central air conditioning heat pumps shall be determined according to appendix M of this subpart. Round the average off mode power consumption to the nearest watt.

(5) Other useful measures of energy consumption for central air conditioners shall be those measures of energy consumption which the Secretary of Energy determines are likely to assist consumers in making purchasing decisions and which are derived from the application of appendix M to this subpart.

(6) All measures of energy consumption must be determined by the test method as set forth in appendix M to this subpart; or by an alternative rating method set forth in § 430.24(m)(4) as approved by the Assistant Secretary for Energy Efficiency and Renewable Energy in accordance with § 430.24(m)(5).

(n) *Furnaces*. (1) The estimated annual operating cost for furnaces is the sum of: (i) The product of the average annual fuel energy consumption, in Btu's per year for gas or oil furnaces or in kilowatt-hours per year for electric furnaces, determined according to section 10.2.2 or 10.3 of appendix N of this subpart, respectively, and the representative average unit cost in dollars per Btu for gas or oil, or dollars per kilowatt-hour for electric, as appropriate, as provided pursuant to section 323(b)(2) of the Act, plus (ii) the product of the average annual auxiliary electric energy consumption in kilowatt-hours per year determined according to section 10.2.3 of appendix N of this subpart, and the representative average unit cost in dollars per kilowatt-hour as provided pursuant to section 323(b)(2) of the Act, the resulting sum then being rounded off to the nearest dollar per year. (For furnaces which operate with variable inputs, an estimated annual operating cost is to be calculated for each degree of oversizing specified in section 10 of appendix N of this subpart.)

(2) The annual fuel utilization efficiency for furnaces, expressed in percent, is the ratio of the annual fuel output of useful energy delivered to the heated space to the annual fuel energy input to the furnace determined according to section 10.1 of appendix N of this subpart for gas and oil furnaces and determined in accordance with section 11.1 of the American National Standards Institute/American Society of Heating, Refrigerating, and Air-Conditioning Engineers (ANSI/ASHRAE) Standard 103–1993 (incorporated by reference, see § 430.3) for electric furnaces. Round the annual fuel utilization efficiency to the nearest whole percentage point.

(3) The estimated regional annual operating cost for furnaces is the sum of: (i) The product of the regional annual fuel energy consumption in Btu's per year for gas or oil furnaces or in kilowatt-hours per year for electric furnaces, determined according to section 10.5.1 or 10.5.3 of appendix N of this subpart, respectively, and the representative average unit cost in dollars per Btu for gas or oil, or dollars per kilowatt-hour for electric, as appropriate, as provided pursuant to section 323(b)(2) of the Act, plus (ii) the product of the regional annual auxiliary electrical energy consumption in kilowatt-hours per year, determined according to section 10.5.2 of appendix N of this subpart, and the representative average unit cost in dollars per kilowatt-hour as provided pursuant to section 323(b)(2) of the Act, the resulting sum then being rounded off to the nearest dollar per year.

(4) The energy factor for furnaces, expressed in percent, is the ratio of annual fuel output of useful energy delivered to the heated space to the total annual energy input to the furnace determined according to section 10.4 of appendix N of this subpart.

(5) The average standby mode and off mode electrical power consumption for furnaces shall be determined according to section 8.6 of appendix N of this subpart. Round the average standby mode and off mode electrical power consumption to the nearest watt.

(6) Other useful measures of energy consumption for furnaces shall be those measures of energy consumption which the Secretary determines are likely to assist consumers in making purchasing decisions and which are derived from the application of appendix N of this subpart.

(o) *Vented home heating equipment.* (1) The annual fuel utilization efficiency for vented home heating equipment, expressed in percent, which is the ratio of the annual fuel output of useful energy delivered to the heated space to the annual fuel energy input to the vented heater, shall be determined either according to section 4.1.17 of appendix O of this subpart for vented heaters without either manual controls or thermal stack dampers; according to section 4.2.6 of appendix O of this subpart for vented heaters equipped with manual controls; or according to section 4.3.7 of appendix O of this subpart for vented heaters equipped with thermal stack dampers.

(2) The estimated annual operating cost for vented home heating equipment is the sum of: (i) The product of the average annual fuel energy consumption, in Btu's per year for natural gas, propane, or oil fueled vented home heating equipment, determined according to section 4.6.2 of appendix O of this subpart, and the representative average unit cost in dollars per Btu for natural gas, propane, or oil, as appropriate, as provided pursuant to section 323(b)(2) of the Act; plus (ii) The product of the average annual auxiliary electric energy consumption in kilowatt-hours per year determined according to section 4.6.3 of appendix O of this subpart, and the representative average unit cost in dollars per kilowatt-hours as provided pursuant to section 323(b)(2) of the Act, the resulting sum then being rounded off to the nearest dollar per year.

(3) The estimated operating cost per million Btu output for gas or oil vented home heating equipment with an auxiliary electric system shall be the product of: (A) The quotient of one million Btu divided by the sum of: (*1*) The product of the maximum fuel input in Btu's per hour as determined in 3.1.1 or 3.1.2 of appendix 0 of this subpart times the annual fuel utilization efficiency in percent as determined in 4.1.17, 4.2.6, or 4.3.7 of this appendix as appropriate divided by 100, plus (*2*) the product of the maximum electric power in watts as determined in 3.1.3 of appendix 0 of this subpart times the quantity 3.412; and (B) of the sum of: (*1*) the product of the maximum fuel input in Btu's per hour as determined in 3.1.1 of this appendix times the representative unit cost in dollars per Btu for natural gas, propane, or oil, as appropriate, as provided pursuant to section 323(b)(2) of the Act; plus (*2*) the product of the maximum auxiliary electric power in kilowatts as determined in 3.1.3 of appendix O of this subpart times the representative unit cost in dollars per kilowatt-hour as provided pursuant to section 323(b)(2) of the Act, the resulting quantity shall be rounded off to the nearest 0.01 dollar per million Btu output.

(4) Other useful measures of energy consumption for vented home heating equipment shall be those measures of energy consumption which the Secretary determines are likely to assist consumers in making purchasing decisions and which are derived from the application of appendix O of this subpart.

(p) *Pool heaters.* (1) The estimated annual operating cost for pool heaters is the sum of:

(i) The product of the average annual fuel energy consumption, in Btu's per year, of natural gas or oil fueled pool heaters, determined according to section 5.2 of appendix P of this subpart, and the representative average unit cost in dollars per Btu for natural gas or oil, as appropriate, as provided pursuant to section 323(b)(2) of the Act; plus

(ii) The product of the average annual auxiliary electric energy consumption in kilowatt-hours per year determined according to section 5.3 of appendix P of this subpart, and the representative average unit cost in dollars per kilowatt-hours as provided pursuant to section 323(b)(2) of the Act, the resulting sum then being rounded off to the nearest dollar per year.

(2) The thermal efficiency of pool heaters, expressed as a percent, shall be determined in accordance with section 4 of appendix P to this subpart.

(q) *Fluorescent Lamp Ballasts.* (1) The Estimated Annual Energy Consumption (EAEC) for fluorescent lamp ballasts, expressed in kilowatt-hours per year, shall be the product of:

(i) The input power in kilowatts as determined in accordance with section 3.1.3.1 of appendix Q to this subpart; and

(ii) The representative average use cycle of 1,000 hours per year, the resulting product then being rounded off to the nearest kilowatt-hour per year.

(2) Ballast Efficacy Factor (BEF) shall be as determined in section 4.2 of appendix Q of this subpart.

(3) The Estimated Annual Operating Cost (EAOC) for fluorescent lamp ballasts, expressed in dollars per year, shall be the product of:

(i) The representative average unit energy cost of electricity in dollars per kilowatt-hour as provided by the Secretary,

(ii) The representative average use cycle of 1,000 hours per year, and

(iii) The input power in kilowatts as determined in accordance with section 3.1.3.1 of appendix Q to this subpart, the resulting product then being rounded off to the nearest dollar per year.

(4) Standby power consumption of certain fluorescent lamp ballasts shall be measured in accordance with section 3.2 of appendix Q to this subpart.

(r) *General service fluorescent lamps, general service incandescent lamps, and incandescent reflector lamps.* (1) The estimated annual energy consumption for general service fluorescent lamps, general service incandescent lamps, and incandescent reflector lamps, expressed in kilowatt-hours per year, shall be the product of the input power in kilowatts as determined in accordance with section 4 of appendix R to this subpart and an average annual use specified by the manufacturer, with the resulting product rounded off to the nearest kilowatt-hour per year. Manufacturers must provide a clear and accurate description of the assumptions used for the estimated annual energy consumption.

(2) The lamp efficacy for general service fluorescent lamps shall be equal to the average lumen output divided by the average lamp wattage as determined in section 4 of appendix R of this subpart, with the resulting quotient rounded off to the nearest tenth of a lumen per watt.

(3) The lamp efficacy for general service incandescent lamps shall be equal to the average lumen output divided by the average lamp wattage as determined in section 4 of appendix R of this subpart, with the resulting quotient rounded off to the nearest tenth of a lumen per watt.

(4) The lamp efficacy for incandescent reflector lamps shall be equal to the average lumen output divided by the average lamp wattage as determined in section 4 of appendix R of this subpart, with the resulting quotient rounded off to the nearest tenth of a lumen per watt.

(5) The color rendering index of a general service fluorescent lamp shall be tested and determined in accordance with section 4.4 of appendix R of this subpart and rounded off to the nearest unit.

(6) The rated lifetime for general service incandescent lamps shall be measured in accordance with test procedures described in section 4.2 of Appendix R of this chapter. A lamp shall be compliant with standards if greater than 50 percent of the sample size specified in § 429.27 meets the minimum rated lifetime as specified by energy conservations standards for general service incandescent lamps.

(s) *Faucets.* The maximum permissible water use allowed for lavatory faucets, lavatory replacement aerators, kitchen faucets, and kitchen replacement aerators, expressed in gallons and liters per minute (gpm and L/min), shall be measured in accordance to section 2(a) of appendix S of this subpart. The maximum permissible water use allowed for metering faucets, expressed in gallons and liters per cycle (gal/cycle and L/cycle), shall be measured in accordance to section 2(a) of appendix S of this subpart.

(t) *Showerheads.* The maximum permissible water use allowed for showerheads, expressed in gallons and liters per minute (gpm and L/min), shall be measured in accordance to section 2(b) of appendix S of this subpart.

(u) *Water closets.* The maximum permissible water use allowed for water closets, expressed in gallons and liters per flush (gpf and Lpf), shall be measured in accordance to section 3(a) of appendix T of this subpart.

(v) *Urinals.* The maximum permissible water use allowed for urinals, expressed in gallons and liters per flush (gpf and Lpf), shall be measured in accordance to section 3(b) of appendix T of this subpart.

(w) *Ceiling fans*. The airflow and airflow efficiency for ceiling fans, expressed in cubic feet per minute (CFM) and CFM per watt (CFM/watt), respectively, shall be measured in accordance with section 4 of appendix U of this subpart.

(x) *Ceiling fan light kits*. The efficacy, expressed in lumens per watt (lumens/watt), for ceiling fan light kits with sockets for medium screw base lamps or pin-based fluorescent lamps shall be measured in accordance with section 4 of appendix V of this subpart.

(y) *Medium Base Compact Fluorescent Lamps*. The initial efficacy, lumen maintenance at 1,000 hours, lumen maintenance at 40-percent of rated life, rapid cycle stress test, and lamp life shall be measured in accordance with section 4 of appendix W of this subpart.

(z) *Dehumidifiers*. (1) When using appendix X (see the note at the beginning of appendix X), the energy factor for dehumidifiers, expressed in liters per kilowatt hour (L/kWh), shall be measured in accordance with section 4.1 of appendix X of this subpart.

(2) When using appendix X1 (see the note at the beginning of appendix X1), the integrated energy factor for dehumidifiers, expressed in L/kWh, shall be determined according to paragraph 5.2 of appendix X1 to this subpart.

(aa) *Battery Chargers*. Upon the effective date of any energy conservation standard for battery chargers governing active and maintenance mode energy consumption, the 24-hour energy consumption of a battery charger in active and maintenance modes, expressed in watt-hours, and the power consumption of a battery charger in maintenance mode, expressed in watts, shall be measured in accordance with section 5.10 of appendix Y of this subpart. The power consumption of a battery charger in standby mode and off mode, expressed in watts, shall be measured in accordance with sections 5.11 and 5.12, respectively, of appendix Y of this subpart.

(bb) *External Power Supplies*. The energy consumption of an external power supply, including active-mode efficiency expressed as a percentage and the no-load, off, and standby mode energy consumption levels expressed in watts, shall be measured in accordance with section 4 of appendix Z of this subpart.

[42 FR 27898, June 1, 1977]

EDITORIAL NOTE: For FEDERAL REGISTER citations affecting § 430.23, see the List of CFR Sections Affected, which appears in the Finding Aids section of the printed volume and at *www.fdsys.gov*.

§ 430.24 [Reserved]

§ 430.25 Laboratory Accreditation Program.

Testing for fluorescent lamp ballasts performed in accordance with appendix Q1 to this subpart shall comply with this § 430.25. The testing for general service fluorescent lamps, general service incandescent lamps, and incandescent reflector lamps shall be performed in accordance with Appendix R to this subpart. The testing for medium base compact fluorescent lamps shall be performed in accordance with Appendix W of this subpart. This testing, with the exception of lifetime testing of general service incandescent lamps, shall be conducted by test laboratories accredited by the National Voluntary Laboratory Accreditation Program (NVLAP) or by an accrediting organization recognized by NVLAP. NVLAP is a program of the National Institute of Standards and Technology, U.S. Department of Commerce. NVLAP standards for accreditation of laboratories that test for compliance with standards for fluorescent lamp ballast luminous efficiency (BLE), lamp efficacy, lamp lifetime, and fluorescent lamp CRI are set forth in 15 CFR part 285. A manufacturer's or importer's own laboratory, if accredited, may conduct the applicable testing. Testing for BLE may also be conducted by laboratories accredited by Underwriters Laboratories or Council of Canada. Testing for fluorescent lamp ballasts performed in accordance with Appendix Q to this subpart is not required to be conducted by test laboratories accredited by NVLAP or an accrediting organization recognized by NVLAP.

[77 FR 4216, Jan. 27, 2012]

§ 430.27 Petitions for waiver and applications for interim waiver.

(a)(1) Any interested person may submit a petition to waive for a particular

basic model any requirements of § 430.23, or of any appendix to this subpart, upon the grounds that the basic model contains one or more design characteristics which either prevent testing of the basic model according to the prescribed test procedures, or the prescribed test procedures may evaluate the basic model in a manner so unrepresentative of its true energy consumption characteristics, or water consumption characteristics (in the case of faucets, showerheads, water closets, and urinals) as to provide materially inaccurate comparative data.

(2) Any interested person who has submitted a Petition for Waiver as provided in this subpart may also file an Application for Interim Waiver of the applicable test procedure requirements.

(b)(1) A Petition for Waiver shall be submitted either electronically to *AS_Waiver_Requests@ee.doe.gov* or by mail, in triplicate, to U.S. Department of Energy, Building Technologies Program, Test Procedure Waiver, 1000 Independence Avenue, SW., Mailstop EE–2J, Washington, DC 20585–0121. Each Petition for Waiver shall:

(2) An Application for Interim Waiver shall be submitted in triplicate, with the required three copies of the Petition for Waiver, to the Assistant Secretary for Conservation and Renewable Energy, U.S. Department of Energy. Each Application for Interim Waiver shall reference the Petition for Waiver by identifying the particular basic model(s) for which a waiver and temporary exception are being sought. Each Application for Interim Waiver shall demonstrate likely success of the Petition for Waiver and shall address what economic hardship and/or competitive disadvantage is likely to result absent a favorable determination on the Application for Interim Waiver. Each Application for Interim Waiver shall be signed by the applicant or by an authorized representative.

(c)(1) Each petitioner, after filing a Petition for Waiver with DOE, and after the Petition for Waiver has been published in the FEDERAL REGISTER, shall, within five working days of such publication, notify in writing all known manufacturers of domestically marketed units of the same product type (as listed in section 322(a) of the Act) and shall include in the notice a statement that DOE has published in the FEDERAL REGISTER on a certain date the Petition for Waiver and supporting documents from which confidential information, if any, as determined by DOE, has been deleted in accordance with 10 CFR 1004.11. Each petitioner, in complying with the requirements of this paragraph, shall file with DOE a statement certifying the names and addresses of each person to whom a notice of the Petition for Waiver has been sent.

(2) Each applicant for Interim Waiver, whether filing jointly with, or subsequent to, a Petition for Waiver with DOE, shall concurrently notify in writing all known manufacturers of domestically marketed units of the same product type (as listed in Section 322(a) of the Act) and shall include in the notice a copy of the Petition for Waiver and a copy of the Application for Interim Waiver. In complying with this section, each applicant shall in the written notification include a statement that the Assistant Secretary for Conservation and Renewable Energy will receive and consider timely written comments on the Application for Interim Waiver. Each applicant, upon filing an Application for Interim Waiver, shall in complying with the requirements of this paragraph certify to DOE that a copy of these documents have been sent to all known manufacturers of domestically marked units of the same product type (as listed in section 322(a) of the Act). Such certification shall include the names and addresses of such persons. Each applicant also shall comply with the provisions of paragraph (c)(1) of this section with respect to the petition for waiver.

(d) Any person submitting written comments to DOE with respect to an Application for Interim Waiver shall also send a copy of the comments to the applicant.

(e) If administratively feasible, applicant shall be notified in writing of the disposition of the Application for Interim Waiver within 15 business days of receipt of the application. Notice of DOE's determination on the Application for Interim Waiver shall be published in the FEDERAL REGISTER.

(f) The filing of an Application for Interim Waiver shall not constitute grounds for noncompliance with any requirements of this subpart, until an Interim Waiver has been granted.

(g) An Interim Waiver from test procedure requirements will be granted by the Assistant Secretary for Conservation and Renewable Energy if it is determined that the applicant will experience economic hardship if the Application for Interim Waiver is denied, if it appears likely that the Petition for Waiver will be granted, and/or the Assistant Secretary determines that it would be desirable for public policy reasons to grant immediate relief pending a determination on the Petition for Waiver.

(h) An interim waiver will terminate 180 days after issuance or upon the determination on the Petition for Waiver, whichever occurs first. An interim waiver may be extended by DOE for 180 days. Notice of such extension and/or any modification of the terms or duration of the interim waiver shall be published in the FEDERAL REGISTER, and shall be based on relevant information contained in the record and any comments received subsequent to issuance of the interim waiver.

(i) Following publication of the Petition for Waiver in the FEDERAL REGISTER, a petitioner may, within 10 working days of receipt of a copy of any comments submitted in accordance with paragraph (b)(1) of this section, submit a rebuttal statement to the Assistant Secretary for Conservation and Renewable Energy. A petitioner may rebut more than one response in a single rebuttal statement.

(j) The petitioner shall be notified in writing as soon as practicable of the disposition of each Petition for Waiver. The Assistant Secretary for Conservation and Renewable Energy shall issue a decision on the petition as soon as is practicable following receipt and review of the Petition for Waiver and other applicable documents, including, but not limited to, comments and rebuttal statements.

(k) The filing of a Petition for Waiver shall not constitute grounds for noncompliance with any requirements of this subpart, until a waiver or interim waiver has been granted.

(l) Waivers will be granted by the Assistant Secretary for Conservation and Renewable Energy, if it is determined that the basic model for which the waiver was requested contains a design characteristic which either prevents testing of the basic model according to the prescribed test procedures, or the prescribed test procedures may evaluate the basic model in a manner so unrepresentative of its true energy consumption characteristics, or water consumption characteristics (in the case of faucets, showerheads, water closets, and urinals) as to provide materially inaccurate comparative data. Waivers may be granted subject to conditions, which may include adherence to alternate test procedures specified by the Assistant Secretary for Conservation and Renewable Energy. The Assistant Secretary shall consult with the Federal Trade Commission prior to granting any waiver, and shall promptly publish in the FEDERAL REGISTER notice of each waiver granted or denied, and any limiting conditions of each waiver granted.

(m) Within one year of the granting of any waiver, the Department of Energy will publish in the FEDERAL REGISTER a notice of proposed rulemaking to amend its regulations so as to eliminate any need for the continuation of such waiver. As soon thereafter as practicable, the Department of Energy will publish in the FEDERAL REGISTER a final rule. Such waiver will terminate on the effective date of such final rule.

(n) In order to exhaust administrative remedies, any person aggrieved by an action under this section must file an appeal with the DOE's Office of Hearings and Appeals as provided in 10 CFR part 1003, subpart C.

[51 FR 42826, Nov. 26, 1986, as amended at 60 FR 15017, Mar. 21, 1995; 63 FR 13316, Mar. 18, 1998; 76 FR 12502, Mar. 7, 2011]

APPENDIX A TO SUBPART B OF PART 430—UNIFORM TEST METHOD FOR MEASURING THE ENERGY CONSUMPTION OF ELECTRIC REFRIGERATORS AND ELECTRIC REFRIGERATOR-FREEZERS

The provisions of appendix A shall apply to all products manufactured on or after the effective date of any amended standards promulgated by DOE pursuant to Section

325(b)(4) of the Energy Policy and Conservation Act of 1975, as amended by the Energy Independence and Security Act of 2007 (to be codified at 42 U.S.C. 6295(b)(4)).

1. Definitions

Section 3, *Definitions*, of HRF–1–2008 (incorporated by reference; see §430.3) applies to this test procedure.

1.1 ''Adjusted total volume'' means the sum of:

(i) The fresh food compartment volume as defined in HRF–1–2008 (incorporated by reference; see §430.3) in cubic feet, and

(ii) The product of an adjustment factor and the net freezer compartment volume as defined in HRF–1–2008 in cubic feet.

1.2 ''All-refrigerator'' means an electric refrigerator that does not include a compartment for the freezing and long time storage of food at temperatures below 32 °F (0.0 °C). It may include a compartment of 0.50 cubic-foot capacity (14.2 liters) or less for the freezing and storage of ice.

1.3 ''Anti-sweat heater'' means a device incorporated into the design of a refrigerator or refrigerator-freezer to prevent the accumulation of moisture on the exterior or interior surfaces of the cabinet.

1.4 ''Anti-sweat heater switch'' means a user-controllable switch or user interface which modifies the activation or control of anti-sweat heaters.

1.5 ''Automatic defrost'' means a system in which the defrost cycle is automatically initiated and terminated, with resumption of normal refrigeration at the conclusion of the defrost operation. The system automatically prevents the permanent formation of frost on all refrigerated surfaces. Nominal refrigerated food temperatures are maintained during the operation of the automatic defrost system.

1.6 ''Automatic icemaker'' means a device, that can be supplied with water without user intervention, either from a pressurized water supply system or by transfer from a water reservoir located inside the cabinet, that automatically produces, harvests, and stores ice in a storage bin, with means to automatically interrupt the harvesting operation when the ice storage bin is filled to a pre-determined level.

1.7 ''Cycle'' means the period of 24 hours for which the energy use of an electric refrigerator or electric refrigerator-freezer is calculated as though the consumer activated compartment temperature controls were set to maintain the standardized temperatures (see section 3.2).

1.8 ''Cycle type'' means the set of test conditions having the calculated effect of operating an electric refrigerator or electric refrigerator-freezer for a period of 24 hours, with the consumer activated controls other than those that control compartment temperatures set to establish various operating characteristics.

1.9 ''Defrost cycle type'' means a distinct sequence of control whose function is to remove frost and/or ice from a refrigerated surface. There may be variations in the defrost control sequence such as the number of defrost heaters energized. Each such variation establishes a separate distinct defrost cycle type. However, defrost achieved regularly during the compressor off-cycles by warming of the evaporator without active heat addition is not a defrost cycle type.

1.10 ''Externally vented refrigerator or refrigerator-freezer'' means an electric refrigerator or electric refrigerator-freezer that has an enclosed condenser or an enclosed condenser/compressor compartment and a set of air ducts for transferring the exterior air from outside the building envelope into, through, and out of the refrigerator or refrigerator-freezer cabinet; is capable of mixing exterior air with the room air before discharging into, through, and out of the condenser or condenser/compressor compartment; may include thermostatically controlled dampers or controls that mix the exterior and room air at low outdoor temperatures and exclude exterior air when the outdoor air temperature is above 80 °F (26.7 °C) or the room air temperature; and may have a thermostatically actuated exterior air fan.

1.11 ''HRF–1–2008'' means AHAM Standard HRF–1–2008, Association of Home Appliance Manufacturers, Energy and Internal Volume of Refrigerating Appliances (2008), including Errata to Energy and Internal Volume of Refrigerating Appliances, Correction Sheet issued November 17, 2009. Only sections of HRF–1–2008 (incorporated by reference; see §430.3) specifically referenced in this test procedure are part of this test procedure. In cases where there is a conflict, the language of the test procedure in this appendix takes precedence over HRF–1–2008.

1.12 ''Long-time automatic defrost'' means an automatic defrost system whose successive defrost cycles are separated by 14 hours or more of compressor operating time.

1.13 ''Separate auxiliary compartment'' means a freezer compartment or a fresh food compartment of a refrigerator or refrigerator-freezer having more than two compartments that is not the first freezer compartment or the first fresh food compartment. Access to a separate auxiliary compartment is through a separate exterior door or doors rather than through the door or doors of another compartment. Separate auxiliary compartments may be convertible (e.g., from fresh food to freezer). Separate auxiliary freezer compartments may not be larger than the first freezer compartment and separate auxiliary fresh food compartments may not be larger than the first fresh food compartment, but such size restrictions

do not apply to separate auxiliary convertible compartments.

1.14 ''Special compartment'' means any compartment other than a butter conditioner, without doors directly accessible from the exterior, and with separate temperature control (such as crispers convertible to meat keepers) that is not convertible from fresh food temperature range to freezer temperature range.

1.15 ''Stabilization period'' means the total period of time during which steady-state conditions are being attained or evaluated.

1.16 ''Standard cycle'' means the cycle type in which the anti-sweat heater control, when provided, is set in the highest energy-consuming position.

1.17 ''Variable anti-sweat heater control'' means an anti-sweat heater control that varies the average power input of the anti-sweat heater(s) based on operating condition variable(s) and/or ambient condition variable(s).

1.18 ''Variable defrost control'' means an automatic defrost system in which successive defrost cycles are determined by an operating condition variable or variables other than solely compressor operating time. This includes any electrical or mechanical device performing this function. A control scheme that changes the defrost interval from a fixed length to an extended length (without any intermediate steps) is not considered a variable defrost control. A variable defrost control feature should predict the accumulation of frost on the evaporator and react accordingly. Therefore, the times between defrost should vary with different usage patterns and include a continuum of lengths of time between defrosts as inputs vary.

2. Test Conditions

2.1 Ambient Temperature. The ambient temperature shall be 90.0 ±1 °F (32.2 ±0.6 °C) during the stabilization period and the test period.

2.2 Operational Conditions. The electric refrigerator or electric refrigerator-freezer shall be installed and its operating conditions maintained in accordance with HRF–1–2008, (incorporated by reference; see §430.3), section 5.3 through section 5.5.5.5 (excluding section 5.5.5.4). Exceptions and clarifications to the cited sections of HRF–1–2008 are noted in sections 2.3 through 2.8, and 5.1 of this test procedure.

2.3 Anti-Sweat Heaters. The anti-sweat heater switch is to be on during one test and off during a second test. In the case of an electric refrigerator-freezer equipped with variable anti-sweat heater control, the standard cycle energy use shall be the result of the calculation described in 6.2.3.

2.4 Conditions for Automatic Defrost Refrigerator-Freezers. For automatic defrost refrigerator-freezers, the freezer compartments shall not be loaded with any frozen food packages during testing. Cylindrical metallic masses of dimensions 1.12 ±0.25 inches (2.9 ±0.6 cm) in diameter and height shall be attached in good thermal contact with each temperature sensor within the refrigerated compartments. All temperature measuring sensor masses shall be supported by low-thermal-conductivity supports in such a manner to ensure that there will be at least 1 inch (2.5 cm) of air space separating the thermal mass from contact with any interior surface or hardware inside the cabinet. In case of interference with hardware at the sensor locations specified in section 5.1, the sensors shall be placed at the nearest adjacent location such that there will be a 1-inch air space separating the sensor mass from the hardware.

2.5 Conditions for All-Refrigerators. There shall be no load in the freezer compartment during the test.

2.6 The cabinet and its refrigerating mechanism shall be assembled and set up in accordance with the printed consumer instructions supplied with the cabinet. Set-up of the refrigerator or refrigerator-freezer shall not deviate from these instructions, unless explicitly required or allowed by this test procedure. Specific required or allowed deviations from such set-up include the following:

(a) Connection of water lines and installation of water filters are not required;

(b) Clearance requirements from surfaces of the product shall be as described in section 2.8 of this appendix;

(c) The electric power supply shall be as described in HRF–1–2008 (incorporated by reference; see §430.3), section 5.5.1;

(d) Temperature control settings for testing shall be as described in section 3 below. Settings for convertible compartments and other temperature-controllable or special compartments shall be as described in section 2.7 of this appendix;

(e) The product does not need to be anchored or otherwise secured to prevent tipping during energy testing;

(f) All the product's chutes and throats required for the delivery of ice shall be free of packing, covers, or other blockages that may be fitted for shipping or when the icemaker is not in use; and

(g) Ice storage bins shall be emptied of ice.

For cases in which set-up is not clearly defined by this test procedure, manufacturers must submit a petition for a waiver (see section 7).

2.7 Compartments that are convertible (e.g., from fresh food to freezer) shall be operated in the highest energy use position. For the special case of convertible separate auxiliary compartments, this means that the compartment shall be treated as a freezer compartment or a fresh food compartment, depending on which of these represents higher energy use. Special compartments shall be

tested with controls set to provide the coldest temperature. However, for special compartments in which temperature control is achieved using the addition of heat (including resistive electric heating, refrigeration system waste heat, or heat from any other source, but excluding the transfer of air from another part of the interior of the product) for any part of the controllable temperature range of that compartment, the product energy use shall be determined by averaging two sets of tests. The first set of tests shall be conducted with such special compartments at their coldest settings, and the second set of tests shall be conducted with such special compartments at their warmest settings. The requirements for the warmest or coldest temperature settings of this section do not apply to features or functions associated with temperature control (such as fast chill compartments) that are initiated manually and terminated automatically within 168 hours.

2.8 The space between the back of the cabinet and a vertical surface (the test room wall or simulated wall) shall be the minimum distance in accordance with the manufacturer's instructions. However, the clearance shall not be greater than 2 inches (51 mm) from the plane of the cabinet's back panel to the vertical surface. If permanent rear spacers extend further than this distance, the appliance shall be located with the spacers in contact with the vertical surface.

2.9 Steady-State Condition. Steady-state conditions exist if the temperature measurements in all measured compartments taken at 4-minute intervals or less during a stabilization period are not changing at a rate greater than 0.042 °F (0.023 °C) per hour as determined by the applicable condition of A or B, described below.

A. The average of the measurements during a 2-hour period if no cycling occurs or during a number of complete repetitive compressor cycles occurring through a period of no less than 2 hours is compared to the average over an equivalent time period with 3 hours elapsing between the two measurement periods.

B. If A above cannot be used, the average of the measurements during a number of complete repetitive compressor cycles occurring through a period of no less than 2 hours and including the last complete cycle before a defrost period (or if no cycling occurs, the average of the measurements during the last 2 hours before a defrost period) are compared to the same averaging period before the following defrost period.

2.10 Exterior Air for Externally Vented Refrigerator or Refrigerator-Freezer. An exterior air source shall be provided with adjustable temperature and pressure capabilities. The exterior air temperature shall be adjustable from 30 ±1 °F (1.7 ±0.6 °C) to 90 ±1 °F (32.2 ±0.6 °C).

2.10.1 Air Duct. The exterior air shall pass from the exterior air source to the test unit through an insulated air duct.

2.10.2 Air Temperature Measurement. The air temperature entering the condenser or condenser/compressor compartment shall be maintained to ±3 °F (1.7 °C) during the stabilization and test periods and shall be measured at the inlet point of the condenser or condenser/compressor compartment (''condenser inlet''). Temperature measurements shall be taken from at least three temperature sensors or one sensor per 4 square inches (25.8 square cm) of the air duct cross-sectional area, whichever is greater, and shall be averaged. For a unit that has a condenser air fan, a minimum of three temperature sensors at the condenser fan discharge shall be required. Temperature sensors shall be arranged to be at the centers of equally divided cross-sectional areas. The exterior air temperature, at its source, shall be measured and maintained to ±1 °F (0.6 °C) during the test period. The temperature measuring devices shall have an error no greater than ±0.5 °F (±0.3 °C). Measurements of the air temperature during the test period shall be taken at regular intervals not to exceed 4 minutes.

2.10.3 Exterior Air Static Pressure. The exterior air static pressure at the inlet point of the unit shall be adjusted to maintain a negative pressure of 0.20″ ±0.05″ water column (62 Pascals ±12.5 Pascals) for all air flow rates supplied to the unit. The pressure sensor shall be located on a straight duct with a distance of at least 7.5 times the diameter of the duct upstream and a distance of at least 3 times the diameter of the duct downstream. There shall be four static pressure taps at 90° angles apart. The four pressures shall be averaged by interconnecting the four pressure taps. The air pressure measuring instrument shall have an error no greater than 0.01'' water column (2.5 Pascals).

3. Test Control Settings

3.1 Model with no User Operable Temperature Control. A test shall be performed to measure the compartment temperatures and energy use. A second test shall be performed with the temperature control electrically short circuited to cause the compressor to run continuously.

3.2 Models with User Operable Temperature Control. Testing shall be performed in accordance with one of the following sections using the following standardized temperatures:

All-Refrigerator: 39 °F (3.9 °C) fresh food compartment temperature;

Refrigerator: 15 °F (−9.4 °C) freezer compartment temperature, 39 °F (3.9 °C) fresh food compartment temperature;

Refrigerator-Freezer: 0 °F (−17.8 °C) freezer compartment temperature, 39 °F (3.9 °C) fresh food compartment temperature.

For the purposes of comparing compartment temperatures with standardized temperatures, as described in sections 3.2.1 and 3.2.2, the freezer compartment temperature shall be as specified in section 5.1.4, and the fresh food compartment temperature shall be as specified in section 5.1.3.

3.2.1 A first test shall be performed with all compartment temperature controls set at their median position midway between their warmest and coldest settings. For mechanical control systems, knob detents shall be mechanically defeated if necessary to attain a median setting. For electronic control systems, the test shall be performed with all compartment temperature controls set at the average of the coldest and warmest settings—if there is no setting equal to this average, the setting closest to the average shall be used. If there are two such settings equally close to the average, the higher of these temperature control settings shall be used. A second test shall be performed with all controls set at their warmest setting or all controls set at their coldest setting (not electrically or mechanically bypassed). For all-refrigerators, this setting shall be the appropriate setting that attempts to achieve compartment temperatures measured during the two tests which bound (i.e., one is above and one is below) the standardized temperature for all-refrigerators. For refrigerators and refrigerator-freezers, the second test shall be conducted with all controls at their coldest setting, unless all compartment temperatures measured during the first part of the test are lower than the standardized temperatures, in which case the second test shall be conducted with all controls at their warmest setting. Refer to Table 1 for all-refrigerators or Table 2 for refrigerators with freezer compartments and refrigerator-freezers to determine which test results to use in the energy consumption calculation. If any compartment is warmer than its standardized temperature for a test with all controls at their coldest position, the tested unit fails the test and cannot be rated.

TABLE 1—TEMPERATURE SETTINGS FOR ALL-REFRIGERATORS

First test		Second test		Energy calculation based on:
Settings	Results	Settings	Results	
Mid	Low	Warm	Low	Second Test Only.
			High	First and Second Tests.
	High	Cold	Low	First and Second Tests.
			High	No Energy Use Rating.

TABLE 2—TEMPERATURE SETTINGS FOR REFRIGERATORS WITH FREEZER COMPARTMENTS AND REFRIGERATOR-FREEZERS

First test		Second test		Energy calculation based on:
Settings	Results	Settings	Results	
Fzr Mid FF Mid	Fzr Low FF Low	Fzr Warm FF Warm	Fzr Low FF Low	Second Test Only.
			Fzr Low FF High	First and Second Tests.
			Fzr High FF Low	First and Second Tests.
			Fzr High FF High	First and Second Tests.
	Fzr Low FF High	Fzr Cold FF Cold	Fzr Low FF High	No Energy Use Rating.
			Fzr Low FF Low	First and Second Tests.
	Fzr High FF Low	Fzr Cold FF Cold	Fzr High FF Low	No Energy Use Rating.
			Fzr Low FF Low	First and Second Tests.
	Fzr High FF High	Fzr Cold FF Cold	Fzr Low FF Low	First and Second Tests.
			Fzr Low FF High	No Energy Use Rating.
			Fzr High FF Low	No Energy Use Rating.
			Fzr High FF High	No Energy Use Rating.

Notes: Fzr = Freezer Compartment, FF = Fresh Food Compartment.

3.2.2 Alternatively, a first test may be performed with all temperature controls set at their warmest setting. If all compartment temperatures are below the appropriate standardized temperatures, then the result of this test alone will be used to determine energy consumption. If this condition is not met, then the unit shall be tested in accordance with 3.2.1.

3.2.3 Temperature Settings for Separate Auxiliary Convertible Compartments. For separate auxiliary convertible compartments tested as freezer compartments, the median setting shall be within 2 °F (1.1 °C) of the standardized temperature, and the warmest setting shall be above 5 °F (−15 °C). For separate auxiliary convertible compartments

tested as fresh food compartments, the median setting shall be within 2 °F (1.1 °C) of the standardized temperature, and the coldest setting shall be below 34 °F (1.1 °C). For compartments where control settings are not expressed as particular temperatures, the measured temperature of the convertible compartment rather than the settings shall meet the specified criteria.

4. Test Period

Tests shall be performed by establishing the conditions set forth in section 2, and using the control settings set forth in section 3.

4.1 Nonautomatic Defrost. If the model being tested has no automatic defrost system, the test time period shall start after steady-state conditions have been achieved and be no less than 3 hours in duration. During the test period, the compressor motor shall complete two or more whole compressor cycles. (A compressor cycle is a complete ''on'' and a complete ''off'' period of the motor). If no ''off'' cycling will occur, as determined during the stabilization period, the test period shall be 3 hours. If incomplete cycling occurs (i.e. less than two compressor cycles during a 24-hour period), the results of the 24-hour period shall be used.

4.2 Automatic Defrost. If the model being tested has an automatic defrost system, the test time period shall start after steady-state conditions have been achieved and be from one point during a defrost period to the same point during the next defrost period. If the model being tested has a long-time automatic defrost system, the alternative provisions of 4.2.1 may be used. If the model being tested has a variable defrost control, the provisions of section 4.2.2 shall apply. If the model has a dual compressor system with automatic defrost for both systems, the provisions of 4.2.3 shall apply. If the model being tested has long-time automatic or variable defrost control involving multiple defrost cycle types, such as for a product with a single compressor and two or more evaporators in which the evaporators are defrosted at different frequencies, the provisions of section 4.2.4 shall apply. If the model being tested has multiple defrost cycle types for which compressor run time between defrosts is a fixed time of less than 14 hours for all such cycle types, and for which the compressor run time between defrosts for different defrost cycle types are equal to or multiples of each other, the test time period shall be from one point of the defrost cycle type with the longest compressor run time between defrosts to the same point during the next occurrence of this defrost cycle type. For such products not using the section 4.2.4 procedures, energy consumption shall be calculated as described in section 5.2.1.1.

4.2.1 Long-time Automatic Defrost. If the model being tested has a long-time automatic defrost system, the two-part test described in this section may be used. The first part is a stable period of compressor operation that includes no portions of the defrost cycle, such as precooling or recovery, that is otherwise the same as the test for a unit having no defrost provisions (section 4.1). The second part is designed to capture the energy consumed during all of the events occurring with the defrost control sequence that are outside of stable operation.

4.2.1.1 Cycling Compressor System. For a system with a cycling compressor, the second part of the test starts at the termination of the last regular compressor ''on'' cycle. The average temperatures of the fresh food and freezer compartments measured from the termination of the previous compressor ''on'' cycle to the termination of the last regular compressor ''on'' cycle must both be within 0.5 °F (0.3 °C) of their average temperatures measured for the first part of the test. If any compressor cycles occur prior to the defrost heater being energized that cause the average temperature in either compartment to deviate from its average temperature for the first part of the test by more than 0.5 °F (0.3 °C), these compressor cycles are not considered regular compressor cycles and must be included in the second part of the test. As an example, a ''precooling'' cycle, which is an extended compressor cycle that lowers the temperature(s) of one or both compartments prior to energizing the defrost heater, must be included in the second part of the test. The test period for the second part of the test ends at the termination of the first regular compressor ''on'' cycle after both compartment temperatures have fully recovered to their stable conditions. The average temperatures of the compartments measured from this termination of the first regular compressor ''on'' cycle until the termination of the next regular compressor ''on'' cycle must both be within 0.5 °F (0.3 °C) of their average temperatures measured for the first part of the test. See Figure 1.

Figure 1

Long-time Automatic Defrost Diagram for Cycling Compressors

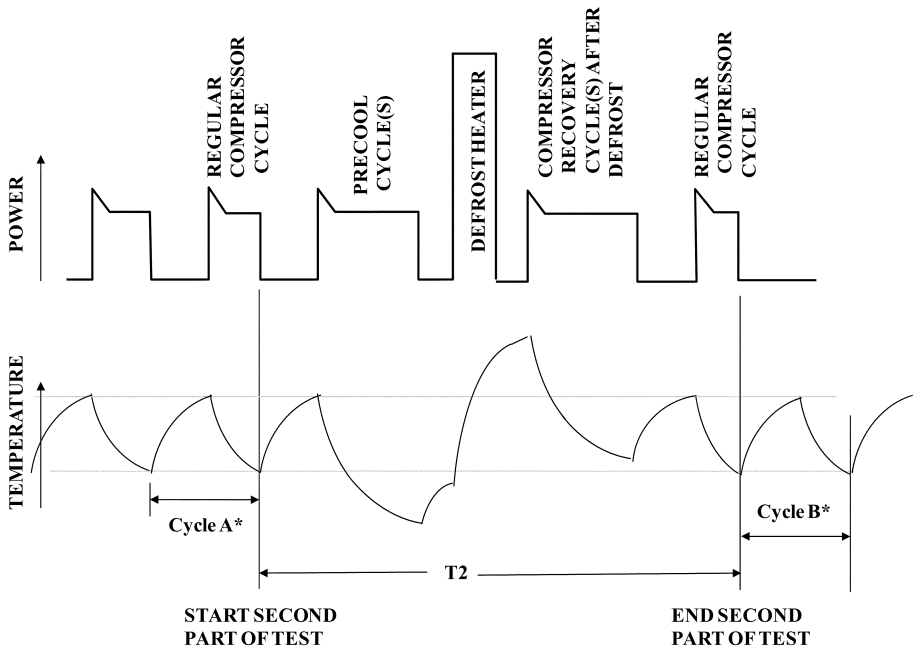

***Average compartment temperature(s) during cycles A & B must be within 0.5 °F of the average temperature(s) for the first part of the test.**

4.2.1.2 Non-cycling Compressor System. For a system with a non-cycling compressor, the second part of the test starts at a time before defrost during stable operation when the temperatures of both fresh food and freezer compartments are within 0.5 °F (0.3 °C) of their average temperatures measured for the first part of the test. The second part stops at a time after defrost during stable operation when the temperatures of both compartments are within 0.5 °F (0.3 °C) of their average temperatures measured for the first part of the test. See Figure 2.

Figure 2

Long-time Automatic Defrost Diagram for Non-Cycling Compressors

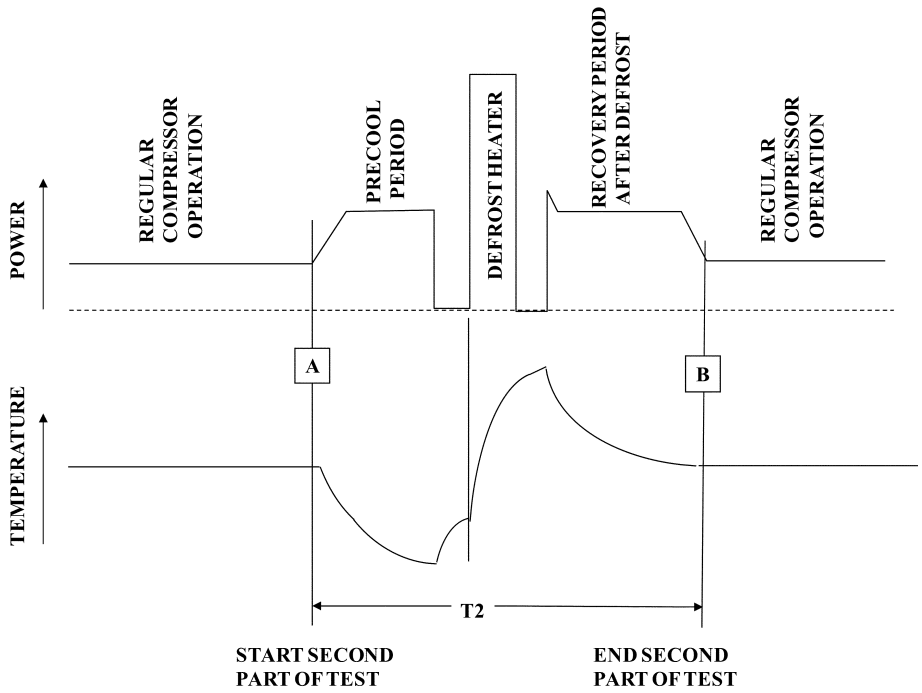

***Average compartment temperature(s) at times A & B must be within 0.5 °F of the average temperature(s) for the first part of the test.**

4.2.2 Variable Defrost Control. If the model being tested has a variable defrost control system, the test shall consist of the same two parts as the test for long-time automatic defrost (section 4.2.1).

4.2.3 Dual Compressor Systems with Automatic Defrost. If the model being tested has separate compressor systems for the refrigerator and freezer sections, each with its own automatic defrost system, then the two-part method in 4.2.1 shall be used. The second part of the method will be conducted separately for each automatic defrost system. The components (compressor, fan motors, defrost heaters, anti-sweat heaters, etc.) associated with each system will be identified and their energy consumption will be separately measured during each test.

4.2.4 Systems with Multiple Defrost Frequencies. This section applies to models with long-time automatic or variable defrost control with multiple defrost cycle types, such as models with single compressors and multiple evaporators in which the evaporators have different defrost frequencies. The two-part method in 4.2.1 shall be used. The second part of the method will be conducted separately for each distinct defrost cycle type.

5. Test Measurements

5.1 Temperature Measurements. Temperature measurements shall be made at the locations prescribed in Figures 5.1 and 5.2 of HRF–1–2008 (incorporated by reference; *see* § 430.3) and shall be accurate to within ±0.5 °F (0.3 °C). No freezer temperature measurements need be taken in an all-refrigerator model.

If the interior arrangements of the cabinet do not conform with those shown in Figure 5.1 and 5.2 of HRF–1–2008, the product may be tested by relocating the temperature sensors from the locations specified in the figures to

avoid interference with hardware or components within the cabinet, in which case the specific locations used for the temperature sensors shall be noted in the test data records maintained by the manufacturer in accordance with 10 CFR 429.14, and the certification report shall indicate that nonstandard sensor locations were used.

5.1.1 Measured Temperature. The measured temperature of a compartment is to be the average of all sensor temperature readings taken in that compartment at a particular point in time. Measurements shall be taken at regular intervals not to exceed 4 minutes.

5.1.2 Compartment Temperature. The compartment temperature for each test period shall be an average of the measured temperatures taken in a compartment during the test period as defined in section 4. For long-time automatic defrost models, compartment temperatures shall be those measured in the first part of the test period specified in section 4.2.1. For models with variable defrost controls, compartment temperatures shall be those measured in the first part of the test period specified in section 4.2.2.

5.1.3 Fresh Food Compartment Temperature. The fresh food compartment temperature shall be calculated as:

$$TR = \frac{\sum_{i=1}^{R}(TR_i) \times (VR_i)}{\sum_{i=1}^{R}(VR_i)}$$

Where:

R is the total number of applicable fresh food compartments, which include the first fresh food compartment and any number of separate auxiliary fresh food compartments (including separate auxiliary convertible compartments tested as fresh food compartments in accordance with section 2.7);

TR_i is the compartment temperature of fresh food compartment ''i'' determined in accordance with section 5.1.2; and

VR_i is the volume of fresh food compartment ''i''.

5.1.4 Freezer Compartment Temperature. The freezer compartment temperature shall be calculated as:

$$TF = \frac{\sum_{i=1}^{F}(TF_i) \times (VF_i)}{\sum_{i=1}^{F}(VF_i)}$$

Where:

F is the total number of applicable freezer compartments, which include the first freezer compartment and any number of separate auxiliary freezer compartments (including separate auxiliary convertible compartments tested as freezer compartments in accordance with section 2.7);

TF_i is the compartment temperature of freezer compartment ''i'' determined in accordance with section 5.1.2; and

VF_i is the volume of freezer compartment ''i''.

5.2 Energy Measurements

5.2.1 Per-Day Energy Consumption. The energy consumption in kilowatt-hours per day, ET, for each test period shall be the energy expended during the test period as specified in section 4 adjusted to a 24-hour period. The adjustment shall be determined as follows.

5.2.1.1 Nonautomatic and Automatic Defrost Models. The energy consumption in kilowatt-hours per day shall be calculated equivalent to:

$ET = EP \times 1440/T$

Where:

ET = test cycle energy expended in kilowatt-hours per day;

EP = energy expended in kilowatt-hours during the test period;

T = length of time of the test period in minutes; and

1440 = conversion factor to adjust to a 24-hour period in minutes per day.

5.2.1.2 Long-time Automatic Defrost. If the two-part test method is used, the energy consumption in kilowatt-hours per day shall be calculated equivalent to:

$ET = (1440 \times EP1/T1) + (EP2 - (EP1 \times T2/T1)) \times (12/CT)$

Where:

ET and 1440 are defined in 5.2.1.1;

EP1 = energy expended in kilowatt-hours during the first part of the test;

EP2 = energy expended in kilowatt-hours during the second part of the test;

T1 and T2 = length of time in minutes of the first and second test parts respectively;

CT = defrost timer run time or compressor run time between defrosts in hours required to cause it to go through a complete cycle, rounded to the nearest tenth of an hour; and

12 = factor to adjust for a 50-percent run time of the compressor in hours per day.

5.2.1.3 Variable Defrost Control. The energy consumption in kilowatt-hours per day shall be calculated equivalent to:

$ET = (1440 \times EP1/T1) + (EP2 - (EP1 \times T2/T1)) \times (12/CT)$,

Where:

1440 is defined in 5.2.1.1 and EP1, EP2, T1, T2, and 12 are defined in 5.2.1.2;

$CT = (CT_L \times CT_M)/(F \times (CT_M - CT_L) + CT_L)$;

CT_L = least or shortest compressor run time between defrosts in hours rounded to the nearest tenth of an hour (greater than or equal to 6 but less than or equal to 12 hours);

CT_M = maximum compressor run time between defrosts in hours rounded to the nearest tenth of an hour (greater than CT_L but not more than 96 hours);

F = ratio of per day energy consumption in excess of the least energy and the maximum difference in per-day energy consumption and is equal to 0.20.

For variable defrost models with no values for CT_L and CT_M in the algorithm, the default values of 6 and 96 shall be used, respectively.

5.2.1.4 Dual Compressor Systems with Dual Automatic Defrost. The two-part test method in section 4.2.4 must be used, and the energy consumption in kilowatt-hours per day shall be calculated equivalent to:

$ET = (1440 \times EP1/T1) + (EP2_F - (EP_F \times T2/T1)) \times (12/CT_F) + (EP2_R - (EP_R \times T3/T1)) \times (12/CT_R)$

Where:

1440, EP1, T1, EP2, 12, and CT are defined in 5.2.1.2;

EP_F = freezer system energy in kilowatt-hours expended during the first part of the test;

$EP2_F$ = freezer system energy in kilowatt-hours expended during the second part of the test for the freezer system;

EP_R = refrigerator system energy in kilowatt-hours expended during the first part of the test;

$EP2_R$ = refrigerator system energy in kilowatt-hours expended during the second part of the test for the refrigerator system;

T2 and T3 = length of time in minutes of the second test part for the freezer and refrigerator systems respectively;

CT_F = compressor run time between freezer defrosts (in hours rounded to the nearest tenth of an hour); and

CT_R = compressor run time between refrigerator defrosts (in hours rounded to the nearest tenth of an hour).

5.2.1.5 Long-time or Variable Defrost Control for Systems with Multiple Defrost cycle Types. The energy consumption in kilowatt-hours per day shall be calculated equivalent to:

$$ET = (1440 \times EP1/T1) + \sum_{i=1}^{D} \left[\left(EP2_i - \left(EP1 \times T2_i / T1 \right) \right) \times \left(12 / CT_i \right) \right]$$

Where:

1440 is defined in 5.2.1.1 and EP1, T1, and 12 are defined in 5.2.1.2;

i is a variable that can equal 1, 2, or more that identifies the distinct defrost cycle types applicable for the refrigerator or refrigerator-freezer;

$EP2_i$ = energy expended in kilowatt-hours during the second part of the test for defrost cycle type i;

$T2_i$ = length of time in minutes of the second part of the test for defrost cycle type i;

CT_i is the compressor run time between instances of defrost cycle type i, for long-time automatic defrost control equal to a fixed time in hours rounded to the nearest tenth of an hour, and for variable defrost control equal to

$(CT_{Li} \times CT_{Mi})/(F \times (CT_{Mi} - CT_{Li}) + CT_{Li})$;

CT_{Li} = least or shortest compressor run time between instances of defrost cycle type i in hours rounded to the nearest tenth of an hour (CT_L for the defrost cycle type with the longest compressor run time between defrosts must be greater than or equal to 6 but less than or equal to 12 hours);

CT_{Mi} = maximum compressor run time between instances of defrost cycle type i in hours rounded to the nearest tenth of an hour (greater than CT_{Li} but not more than 96 hours);

For cases in which there are more than one fixed CT value (for long-time defrost models) or more than one CT_M and/or CT_L value (for variable defrost models) for a given defrost cycle type, an average fixed CT value or average CT_M and CT_L values shall be selected for this cycle type so that 12 divided by this

value or values is the frequency of occurrence of the defrost cycle type in a 24 hour period, assuming 50% compressor run time.

F = default defrost energy consumption factor, equal to 0.20.

For variable defrost models with no values for CT_{Li} and CT_{Mi} in the algorithm, the default values of 6 and 96 shall be used, respectively.

D is the total number of distinct defrost cycle types.

5.3 Volume Measurements. The electric refrigerator or electric refrigerator-freezer total refrigerated volume, VT, shall be measured in accordance with HRF–1–2008, (incorporated by reference; see §430.3), section 3.30 and sections 4.2 through 4.3, and be calculated equivalent to:

VT = VF + VFF

Where:

VT = total refrigerated volume in cubic feet,
VF = freezer compartment volume in cubic feet, and
VFF = fresh food compartment volume in cubic feet.

In the case of refrigerators or refrigerator-freezers with automatic icemakers, the volume occupied by the automatic icemaker, including its ice storage bin, is to be included in the volume measurement.

5.4 Externally Vented Refrigerator or Refrigerator-Freezer Units. All test measurements for the externally vented refrigerator or refrigerator-freezer shall be made in accordance with the requirements of other sections of this appendix, except as modified in this section or other sections expressly applicable to externally vented refrigerators or refrigerator-freezers.

5.4.1 Operability of ''Thermostatic'' and ''Mixing of Air'' Controls. Before conducting energy consumption tests, the operability of thermostatic controls that permit the mixing of exterior and ambient air when exterior air temperatures are less than 60 °F (15.6 °C) must be verified. The operability of such controls shall be verified by operating the unit under ambient air temperature of 90 °F (32.2 °C) and exterior air temperature of 45 °F (7.2 °C). If the inlet air entering the condenser or condenser/compressor compartment is maintained at 60 ±3 °F (15.6 ±1.7 °C), energy consumption of the unit shall be measured under 5.4.2.2 and 5.4.2.3. If the inlet air entering the condenser or condenser/compressor compartment is not maintained at 60 ±3 °F (15.6 ±1.7 °C), energy consumption of the unit shall also be measured under 5.4.2.4.

5.4.2 Energy Consumption Tests.

5.4.2.1 Correction Factor Test. To enable calculation of a correction factor, K, two full cycle tests shall be conducted to measure energy consumption of the unit with air mixing controls disabled and the condenser inlet air temperatures set at 90 °F (32.2 °C) and 80 °F (26.7 °C). Both tests shall be conducted with all compartment temperature controls set at the position midway between their warmest and coldest settings and the anti-sweat heater switch off. Record the energy consumptions ec_{90} and ec_{80}, in kWh/day.

5.4.2.2 Energy Consumption at 90 °F. The unit shall be tested at 90 °F (32.2 °C) exterior air temperature to record the energy consumptions $(e_{90})_i$ in kWh/day. For a given setting of the anti-sweat heater, the value i corresponds to each of the two states of the compartment temperature control positions.

5.4.2.3 Energy Consumption at 60 °F. The unit shall be tested at 60 °F (26.7 °C) exterior air temperature to record the energy consumptions $(e_{60})_i$ in kWh/day. For a given setting of the anti-sweat heater, the value i corresponds to each of the two states of the compartment temperature control positions.

5.4.2.4 Energy Consumption if Mixing Controls do not Operate Properly. If the operability of temperature and mixing controls has not been verified as required under 5.4.1, the unit shall be tested at 50 °F (10.0 °C) and 30 °F (-1.1 °C) exterior air temperatures to record the energy consumptions $(e_{50})_i$ and $(e_{30})_i$. For a given setting of the anti-sweat heater, the value i corresponds to each of the two states of the compartment temperature control positions.

6. Calculation of Derived Results From Test Measurements

6.1 Adjusted Total Volume.

6.1.1 Electric Refrigerators. The adjusted total volume, VA, for electric refrigerators under test shall be defined as:

$$VA = (VF \times CR) + VFF$$

Where:

VA = adjusted total volume in cubic feet;
VF and VFF are defined in 5.3; and
CR = dimensionless adjustment factor of 1.47 for refrigerators other than all-refrigerators, or 1.0 for all-refrigerators.

6.1.2 Electric Refrigerator-Freezers. The adjusted total volume, VA, for electric refrigerator-freezers under test shall be calculated as follows:

$$VA = (VF \times CRF) + VFF$$

Where:

VF and VFF are defined in 5.3 and VA is defined in 6.1.1, and
CRF = dimensionless adjustment factor of 1.76.

6.2 Average Per-Cycle Energy Consumption.

6.2.1 All-Refrigerator Models. The average per-cycle energy consumption for a cycle type, E, is expressed in kilowatt-hours per

cycle to the nearest one hundredth (0.01) kilowatt-hour and shall depend upon the temperature attainable in the fresh food compartment as shown below.

6.2.1.1 If the fresh food compartment temperature is always below 39.0 °F (3.9 °C), the average per-cycle energy consumption shall be equivalent to:

$$E = ET1$$

Where:

ET is defined in 5.2.1; and

The number 1 indicates the test period during which the highest fresh food compartment temperature is measured.

6.2.1.2 If one of the fresh food compartment temperatures measured for a test period is greater than 39.0 °F (3.9 °C), the average per-cycle energy consumption shall be equivalent to:

$$E = ET1 + ((ET2 - ET1) \times (39.0 - TR1)/(TR2 - TR1))$$

Where:

ET is defined in 5.2.1;

TR = fresh food compartment temperature determined according to 5.1.3 in degrees F;

The numbers 1 and 2 indicate measurements taken during the first and second test period as appropriate; and

39.0 = standardized fresh food compartment temperature in degrees F.

6.2.2 Refrigerators and Refrigerator-Freezers. The average per-cycle energy consumption for a cycle type, E, is expressed in kilowatt-hours per-cycle to the nearest one hundredth (0.01) kilowatt-hour and shall be defined in one of the following ways as applicable.

6.2.2.1 If the fresh food compartment temperature is at or below 39 °F (3.9 °C) in both tests and the freezer compartment temperature is at or below 15 °F (-9.4 °C) in both tests of a refrigerator or at or below 0 °F (-17.8 °C) in both tests of a refrigerator-freezer, the per-cycle energy consumption shall be:

$$E = ET1 + IET$$

Where:

ET is defined in 5.2.1;

IET, expressed in kilowatt-hours per cycle, equals 0.23 for a product with an automatic icemaker and otherwise equals 0 (zero); and

The number 1 indicates the test period during which the highest freezer compartment temperature was measured.

6.2.2.2 If the conditions of 6.2.2.1 do not exist, the per-cycle energy consumption shall be defined by the higher of the two values calculated by the following two formulas:

$$E = ET1 + ((ET2 - ET1) \times (39.0 - TR1)/(TR2 - TR1)) + IET$$

and

$$E = ET1 + ((ET2 - ET1) \times (k - TF1)/(TF2 - TF1)) + IET$$

Where:

E is defined in 6.2.1.1;

ET is defined in 5.2.1;

IET is defined in 6.2.2.1;

TR and the numbers 1 and 2 are defined in 6.2.1.2;

TF = freezer compartment temperature determined according to 5.1.4 in degrees F;

39.0 is a specified fresh food compartment temperature in degrees F; and

k is a constant 15.0 for refrigerators or 0.0 for refrigerator-freezers, each being standardized freezer compartment temperatures in degrees F.

6.2.3 Variable Anti-Sweat Heater Models. The standard cycle energy consumption of an electric refrigerator-freezer with a variable anti-sweat heater control (E_{std}), expressed in kilowatt-hours per day, shall be calculated equivalent to:

E_{std} = E + (Correction Factor) where E is determined by 6.2.1.1, 6.2.1.2, 6.2.2.1, or 6.2.2.2, whichever is appropriate, with the anti-sweat heater switch in the ''off'' position or, for a product without an anti-sweat heater switch, the anti-sweat heater in its lowest energy use state.

Correction Factor = (Anti-sweat Heater Power × System-loss Factor) × (24 hrs/1 day) × (1 kW/1000 W)

Where:

Anti-sweat Heater Power = 0.034 * (Heater Watts at 5%RH)
+ 0.211 * (Heater Watts at 15%RH)
+ 0.204 * (Heater Watts at 25%RH)
+ 0.166 * (Heater Watts at 35%RH)
+ 0.126 * (Heater Watts at 45%RH)
+ 0.119 * (Heater Watts at 55%RH)
+ 0.069 * (Heater Watts at 65%RH)
+ 0.047 * (Heater Watts at 75%RH)
+ 0.008 * (Heater Watts at 85%RH)
+ 0.015 * (Heater Watts at 95%RH)

Heater Watts at a specific relative humidity = the nominal watts used by all heaters at that specific relative humidity, 72 °F (22.2 °C) ambient, and DOE reference temperatures of fresh food (FF) average temperature of 39 °F (3.9 °C) and freezer (FZ) average temperature of 0 °F (−17.8 °C).

System-loss Factor = 1.3.

6.3 Externally vented refrigerator or refrigerator-freezers. Per-cycle energy consumption measurements for an externally vented refrigerator or refrigerator-freezer shall be calculated in accordance with the requirements of this appendix, as modified in sections 6.3.1–6.3.7.

6.3.1 Correction Factor. The correction factor, K, shall be calculated as:

$K = ec_{90}/ec_{80}$

Where:

ec_{90} and ec_{80} are measured in section 5.4.2.1.

6.3.2 Combining Test Results of Different Settings of Compartment Temperature Controls. For a given setting of the anti-sweat heater, follow the calculation procedures of 6.2 to combine the test results for energy consumption of the unit at different temperature control settings for each condenser inlet air temperature tested under 5.4.2.2, 5.4.2.3, and 5.4.2.4, where applicable, $(e_{90})_i$, $(e_{60})_i$, $(e_{50})_i$, and $(e_{30})_i$. The combined values, $_{90}$, $_{60}$, $_{50}$, and $_{30}$, where applicable, are expressed in kWh/day.

6.3.3 Energy Consumption Corrections. For a given setting of the anti-sweat heater, adjust the energy consumptions $_{90}$, $_{60}$, $_{50}$, and $_{30}$ calculated in 6.3.2 by multiplying the correction factor K to obtain the corrected energy consumptions per day in kWh/day:

$E_{90} = K \times {}_{90}$,
$E_{60} = K \times {}_{60}$,
$E_{50} = K \times {}_{50}$, and
$E_{30} = K \times {}_{30}$

Where:

K is determined under section 6.3.1; and $_{90}$, $_{60}$, $_{50}$, and $_{30}$ are determined under section 6.3.2.

6.3.4 Energy Profile Equation. For a given setting of the anti-sweat heater, calculate the energy consumption E_X, in kWh/day, at a specific exterior air temperature between 80 °F (26.7 °C) and 60 °F (26.7 °C) using the following equation:

$E_X = E_{60} + (E_{90} - E_{60}) \times (T_X - 60)/30$

Where:

T_X is the exterior air temperature in °F;
60 is the exterior air temperature in °F for the test of section 5.4.2.3;
30 is the difference between 90 and 60;
E_{60} and E_{90} are determined in section 6.3.3.

6.3.5 Energy Consumption at 80 °F (26.7 °C), 75 °F (23.9 °C) and 65 °F (18.3 °C). For a given setting of the anti-sweat heater, calculate the energy consumptions at 80 °F (26.7 °C), 75 °F (23.9 °C) and 65 °F (18.3 °C) exterior air temperatures, E_{80}, E_{75} and E_{65}, respectively, in kWh/day, using the equation in 6.3.4.

6.3.6 National Average Per-Cycle Energy Consumption. For a given setting of the anti-sweat heater, calculate the national average energy consumption, E_N, in kWh/day, using one of the following equations:

$E_N = 0.523 \times E_{60} + 0.165 \times E_{65} + 0.181 \times E_{75} + 0.131 \times E_{80}$, for units not tested under section 5.4.2.4; and

$E_N = 0.257 \times E_{30} + 0.266 \times E_{50} + 0.165 \times E_{65} + 0.181 \times E_{75} + 0.131 \times E_{80}$, for units tested under section 5.4.2.4

Where:

E_{30}, E_{50}, and E_{60} are defined in 6.3.3;
E_{65}, E_{75}, and E_{80} are defined in 6.3.5;
and
the coefficients 0.523, 0.165, 0.181, 0.131, 0.257 and 0.266 are weather-associated weighting factors.

6.3.7 Regional Average Per-Cycle Energy Consumption. If regional average per-cycle energy consumption is required to be calculated for a given setting of the anti-sweat heater, calculate the regional average per-cycle energy consumption, E_R, in kWh/day, for the regions in Figure 3. Use one of the following equations and the coefficients in Table A:

$E_R = a_1 \times E_{60} + c \times E_{65} + d \times E_{75} + e \times E_{80}$, for a unit that is not required to be tested under section 5.4.2.4; or

$E_R = a \times E_{30} + b \times E_{50} + c \times E_{65} + d \times E_{75} + e \times E_{80}$, for a unit tested under section 5.4.2.4

Where:

E_{30}, E_{50}, and E_{60} are defined in section 6.3.3;
E_{65}, E_{75}, and E_{80} are defined in section 6.3.5;
and
a_1, a, b, c, d, and e are weather-associated weighting factors for the regions, as specified in Table A.

TABLE A—COEFFICIENTS FOR CALCULATING REGIONAL AVERAGE PER-CYCLE ENERGY CONSUMPTION

[Weighting factors]

Regions	a1	a	b	c	d	e
I	0.282	0.039	0.244	0.194	0.326	0.198
II	0.486	0.194	0.293	0.191	0.193	0.129
III	0.584	0.302	0.282	0.178	0.159	0.079
IV	0.664	0.420	0.244	0.161	0.121	0.055

Figure 3: Weather Regions for the United States

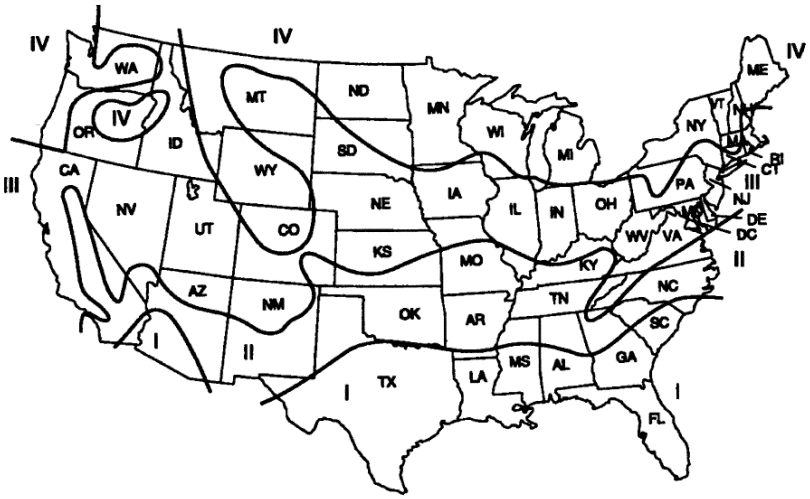

Alaska: Region IV

Hawaii: Region I

7. Test Procedure Waivers

To the extent that the procedures contained in this appendix do not provide a means for determining the energy consumption of a refrigerator or refrigerator-freezer, a manufacturer must obtain a waiver under 10 CFR 430.27 to establish an acceptable test procedure for each such product. Such instances could, for example, include situations where the test set-up for a particular refrigerator or refrigerator-freezer basic model is not clearly defined by the provisions of section 2. For details regarding the criteria and procedures for obtaining a waiver, please refer to 10 CFR 430.27.

[75 FR 78851, Dec. 16, 2010, as amended at 76 FR 12502, Mar. 7, 2011; 76 FR 24781, May 2, 2011; 77 FR 3574, Jan. 25, 2012]

APPENDIX A1 TO SUBPART B OF PART 430—UNIFORM TEST METHOD FOR MEASURING THE ENERGY CONSUMPTION OF ELECTRIC REFRIGERATORS AND ELECTRIC REFRIGERATOR-FREEZERS

The provisions of appendix A1 shall apply to all products manufactured prior to the effective date of any amended standards promulgated by DOE pursuant to Section 325(b)(4) of the Energy Policy and Conservation Act of 1975, as amended by the Energy Independence and Security Act of 2007 (to be codified at 42 U.S.C. 6295(b)(4)).

1. Definitions

Section 3, *Definitions*, of HRF–1–1979 (incorporated by reference; see §430.3) applies to this test procedure.

1.1 ''Adjusted total volume'' means the sum of (i) the fresh food compartment volume as defined in HRF–1–1979 in cubic feet, and (ii) the product of an adjustment factor and the net freezer compartment volume as defined in HRF–1–1979, in cubic feet.

1.2 ''All-refrigerator'' means an electric refrigerator which does not include a compartment for the freezing and long time storage of food at temperatures below 32 °F (0.0 °C). It may include a compartment of 0.50 cubic feet capacity (14.2 liters) or less for the freezing and storage of ice.

1.3 ''Anti-sweat heater'' means a device incorporated into the design of a refrigerator or refrigerator-freezer to prevent the accumulation of moisture on exterior or interior surfaces of the cabinet.

1.4 ''Anti-sweat heater switch'' means a user-controllable switch or user interface which modifies the activation or control of anti-sweat heaters.

1.5 ''Automatic defrost'' means a system in which the defrost cycle is automatically initiated and terminated, with resumption of normal refrigeration at the conclusion of the defrost operation. The system automatically prevents the permanent formation of frost on all refrigerated surfaces. Nominal refrigerated food temperatures are maintained during the operation of the automatic defrost system.

1.6 ''Automatic icemaker'' means a device that can be supplied with water without user intervention, either from a pressurized water supply system or by transfer from a water reservoir located inside the cabinet, that automatically produces, harvests, and stores ice in a storage bin, with means to automatically interrupt the harvesting operation when the ice storage bin is filled to a pre-determined level.

1.7 ''Cycle'' means the period of 24 hours for which the energy use of an electric refrigerator or electric refrigerator-freezer is calculated as though the consumer activated compartment temperature controls were set to maintain the standardized temperatures (see section 3.2).

1.8 ''Cycle type'' means the set of test conditions having the calculated effect of operating an electric refrigerator or electric refrigerator-freezer for a period of 24 hours, with the consumer activated controls other than those that control compartment temperatures set to establish various operating characteristics.

1.9 ''Defrost cycle type'' means a distinct sequence of control whose function is to remove frost and/or ice from a refrigerated surface. There may be variations in the defrost control sequence such as the number of defrost heaters energized. Each such variation establishes a separate distinct defrost cycle type. However, defrost achieved regularly during the compressor off-cycles by warming of the evaporator without active heat addition is not a defrost cycle type.

1.10 ''Externally vented refrigerator or refrigerator-freezer'' means an electric refrigerator or electric refrigerator-freezer that has an enclosed condenser or an enclosed condenser/compressor compartment and a set of air ducts for transferring the exterior air from outside the building envelope into, through, and out of the refrigerator or refrigerator-freezer cabinet; is capable of mixing exterior air with the room air before discharging into, through, and out of the condenser or condenser/compressor compartment; may include thermostatically controlled dampers or controls that mix the exterior and room air at low outdoor temperatures and exclude exterior air when the outdoor air temperature is above 80 °F (26.7 °C) or the room air temperature; and may have a thermostatically actuated exterior air fan.

1.11 ''HRF–1–1979'' means the Association of Home Appliance Manufacturers standard for household refrigerators, combination refrigerator-freezers, and household freezers, also approved as an American National Standard as a revision of ANSI B 38.1–1970. Only sections of HRF–1–1979 (incorporated by reference; see §430.3) specifically referenced in this test procedure are part of this test procedure. In cases where there is a conflict, the language of the test procedure in this appendix takes precedence over HRF–1–1979.

1.12 ''Long-time Automatic Defrost'' means an automatic defrost system where successive defrost cycles are separated by 14 hours or more of compressor-operating time.

1.13 ''Separate auxiliary compartment'' means a freezer compartment or a fresh food compartment of a refrigerator or refrigerator-freezer having more than two compartments that is not the first freezer compartment or the first fresh food compartment. Access to a separate auxiliary compartment is through a separate exterior door or doors rather than through the door or doors of another compartment. Separate auxiliary compartments may be convertible (e.g., from fresh food to freezer). Separate auxiliary freezer compartments may not be larger than the first freezer compartment and separate auxiliary fresh food compartments may not be larger than the first fresh food compartment, but such size restrictions do not apply to separate auxiliary convertible compartments.

1.14 ''Special compartment'' means any compartment other than a butter conditioner, without doors directly accessible from the exterior, and with separate temperature control (such as crispers convertible to meat keepers) that is not convertible from fresh food temperature range to freezer temperature range.

1.15 ''Stabilization Period'' means the total period of time during which steady-state conditions are being attained or evaluated.

1.16 ''Standard cycle'' means the cycle type in which the anti-sweat heater control, when provided, is set in the highest energy consuming position.

1.17 ''Variable anti-sweat heater control'' means an anti-sweat heater control that varies the average power input of the anti-sweat heater(s) based on operating condition variable(s) and/or ambient condition variable(s).

1.18 ''Variable defrost control'' means an automatic defrost system in which successive defrost cycles are determined by an operating condition variable or variables other than solely compressor operating time. This includes any electrical or mechanical device performing this function. A control scheme that changes the defrost interval from a fixed length to an extended length (without any intermediate steps) is not considered a variable defrost control. A variable defrost

control feature should predict the accumulation of frost on the evaporator and react accordingly. Therefore, the times between defrost should vary with different usage patterns and include a continuum of lengths of time between defrosts as inputs vary.

2. Test Conditions

2.1 Ambient Temperature. The ambient temperature shall be 90.0 ±1 °F (32.2 ±0.6 °C) during the stabilization period and the test period.

2.2 Operational Conditions. The electric refrigerator or electric refrigerator-freezer shall be installed and its operating conditions maintained in accordance with HRF–1–1979, (incorporated by reference; see §430.3), section 7.2 through section 7.4.3.3, except that the vertical ambient temperature gradient at locations 10 inches (25.4 cm) out from the centers of the two sides of the unit being tested is to be maintained during the test. Unless the area is obstructed by shields or baffles, the gradient is to be maintained from 2 inches (5.1 cm) above the floor or supporting platform to a height 1 foot (30.5 cm) above the unit under test. Defrost controls are to be operative. Other exceptions and provisions to the cited sections of HRF–1–1979 are noted in sections 2.3 through 2.8, and 5.1 of this appendix.

2.3 Anti-Sweat Heaters.

The anti-sweat heater switch is to be on during one test and off during a second test. In the case of an electric refrigerator-freezer with variable anti-sweat heater control, the standard cycle energy use shall be the result of the calculation described in 6.2.3.

2.4 Conditions for Automatic Defrost Refrigerator-Freezers. For automatic defrost refrigerator-freezers, the freezer compartments shall not be loaded with any frozen food packages during testing. Cylindrical metallic masses of dimensions 1.12 ±0.25 inches (2.9 ±0.6 cm) in diameter and height shall be attached in good thermal contact with each temperature sensor within the refrigerated compartments. All temperature measuring sensor masses shall be supported by low-thermal-conductivity supports in such a manner to ensure that there will be at least 1 inch (2.5 cm) of air space separating the thermal mass from contact with any interior surface or hardware inside the cabinet. In case of interference with hardware at the sensor locations specified in section 5.1, the sensors shall be placed at the nearest adjacent location such that there will be a 1-inch air space separating the sensor mass from the hardware.

2.5 Conditions for all-refrigerators. There shall be no load in the freezer compartment during the test.

2.6 The cabinet and its refrigerating mechanism shall be assembled and set up in accordance with the printed consumer instructions supplied with the cabinet. Set-up of the refrigerator or refrigerator-freezer shall not deviate from these instructions, unless explicitly required or allowed by this test procedure. Specific required or allowed deviations from such set-up include the following:

(a) Connection of water lines and installation of water filters are not required;

(b) Clearance requirements from surfaces of the product shall be as described in section 2.8 below;

(c) The electric power supply shall be as described in HRF–1–1979 (incorporated by reference; see §430.3) section 7.4.1;

(d) Temperature control settings for testing shall be as described in section 3 below. Settings for convertible compartments and other temperature-controllable or special compartments shall be as described in section 2.7 of this appendix;

(e) The product does not need to be anchored or otherwise secured to prevent tipping during energy testing; and

(f) All the product's chutes and throats required for the delivery of ice shall be free of packing, covers, or other blockages that may be fitted for shipping or when the icemaker is not in use.

For cases in which set-up is not clearly defined by this test procedure, manufacturers must submit a petition for a waiver (see section 7).

2.7 Compartments that are convertible (e.g., from fresh food to freezer) shall be operated in the highest energy use position. For the special case of convertible separate auxiliary compartments, this means that the compartment shall be treated as a freezer compartment or a fresh food compartment, depending on which of these represents higher energy use. Special compartments shall be tested with controls set to provide the coldest temperature. This requirement for the coldest temperature does not apply to features or functions associated with temperature control (such as fast chill compartments) that are initiated manually and terminated automatically within 168 hours.

2.8 The space between the back of the cabinet and a vertical surface (the test room wall or simulated wall) shall be the minimum distance in accordance with the manufacturer's instructions.

2.9 Steady State Condition. Steady state conditions exist if the temperature measurements in all measured compartments taken at four minute intervals or less during a stabilization period are not changing at a rate greater than 0.042 °F. (0.023 °C.) per hour as determined by the applicable condition of A or B.

A. The average of the measurements during a two hour period if no cycling occurs or during a number of complete repetitive compressor cycles through a period of no less than two hours is compared to the average

over an equivalent time period with three hours elapsed between the two measurement periods.

B. If A above cannot be used, the average of the measurements during a number of complete repetitive compressor cycles through a period of no less than two hours and including the last complete cycle prior to a defrost period, or if no cycling occurs, the average of the measurements during the last two hours prior to a defrost period; are compared to the same averaging period prior to the following defrost period.

2.10 Exterior air for externally vented refrigerator or refrigerator-freezer. An exterior air source shall be provided with adjustable temperature and pressure capabilities. The exterior air temperature shall be adjustable from 35 ±1 °F (1.7 ±0.6 °C) to 90 ±1 °F (32.2 ±0.6 °C).

2.10.1 Air duct. The exterior air shall pass from the exterior air source to the test unit through an insulated air duct.

2.10.2 Air temperature measurement. The air temperature entering the condenser or condenser/compressor compartment shall be maintained to ±3 °F (1.7 °C) during the stabilization and test periods and shall be measured at the inlet point of the condenser or condenser/compressor compartment (''condenser inlet''). Temperature measurements shall be taken from at least three temperature sensors or one sensor per 4 square inches of the air duct cross sectional area, whichever is greater, and shall be averaged. For a unit that has a condenser air fan, a minimum of three temperature sensors at the condenser fan discharge shall be required. Temperature sensors shall be arranged to be at the centers of equally divided cross sectional areas. The exterior air temperature, at its source, shall be measured and maintained to ±1 °F (0.6 °C) during the test period. The temperature measuring devices shall have an error not greater than ±0.5 °F (±0.3 °C). Measurements of the air temperature during the test period shall be taken at regular intervals not to exceed four minutes.

2.10.3 Exterior air static pressure. The exterior air static pressure at the inlet point of the unit shall be adjusted to maintain a negative pressure of 0.20″ ±0.05″ water column (62 Pa ±12.5 Pa) for all air flow rates supplied to the unit. The pressure sensor shall be located on a straight duct with a distance of at least 7.5 times the diameter of the duct upstream and a distance of at least 3 times the diameter of the duct downstream. There shall be four static pressure taps at 90° angles apart. The four pressures shall be averaged by interconnecting the four pressure taps. The air pressure measuring instrument shall have an error not greater than 0.01″ water column (2.5 Pa).

3. Test Control Settings

3.1 Model with no user operable temperature control. A test shall be performed during which the compartment temperatures and energy use shall be measured. A second test shall be performed with the temperature control electrically short circuited to cause the compressor to run continuously.

3.2 Model with User Operable Temperature Control. Testing shall be performed in accordance with one of the following sections using the standardized temperatures of:

All-Refrigerator: 38 °F (3.3 °C) fresh food compartment temperature;

Refrigerator: 15 °F (−9.4 °C) freezer compartment temperature, 45 °F (7.2 °C) fresh food compartment temperature;

Refrigerator-Freezer: 5 °F (−15 °C) freezer compartment temperature, 45 °F (7.2 °C) fresh food compartment temperature.

For the purposes of comparing compartment temperatures with standardized temperatures, as described in sections 3.2.1 through 3.2.3, the freezer compartment temperature shall be as specified in section 5.1.4, and the fresh food compartment temperature shall be as specified in section 5.1.3.

3.2.1 A first test shall be performed with all compartment temperature controls set at their median position midway between their warmest and coldest settings. For mechanical control systems, knob detents shall be mechanically defeated if necessary to attain a median setting. For electronic control systems, the test shall be performed with all compartment temperature controls set at the average of the coldest and warmest settings—if there is no setting equal to this average, the setting closest to the average shall be used. If there are two such settings equally close to the average, the higher of these temperature control settings shall be used. A second test shall be performed with all controls set at their warmest setting or all controls set at their coldest setting (not electrically or mechanically bypassed). For all-refrigerators, this setting shall be the appropriate setting that attempts to achieve compartment temperatures measured during the two tests which bound (i.e., one is above and one is below) the standardized temperature for all-refrigerators. For refrigerators and refrigerator-freezers, the second test shall be conducted with all controls at their coldest setting, unless all compartment temperatures measured during the first part of the test are lower than the standardized temperatures, in which case the second test shall be conducted with all controls at their warmest setting. If (a) the measured temperature of any compartment with all controls set at their coldest settings is above its standardized temperature, a third test shall be performed with all controls set at their warmest settings and the result of this test

shall be used with the result of the test performed with all controls set at their coldest settings to determine energy consumption. If (b) the measured temperatures of all compartments with all controls set at their warmest settings are below their standardized temperatures then the result of this test alone will be used to determine energy consumption. If neither (a) nor (b) occur, then the results of the first two tests shall be used to determine energy consumption.

3.2.2 Alternatively, a first test may be performed with all temperature controls set at their warmest setting. If the measured temperatures of all compartments for this test are below their standardized temperatures then the result of this test alone will be used to determine energy consumption. If this condition is not met, then the unit shall be tested in accordance with 3.2.1 of this appendix.

3.2.3 Alternatively, a first test may be performed with all temperature controls set at their coldest setting. If the measured temperature of any compartment for this test is above its standardized temperature, a second test shall be performed with all controls set at their warmest settings and the result of this test shall be used with the result of the test performed with all controls set at their coldest settings to determine energy consumption. If this condition is not met, then the unit shall be tested in accordance with 3.2.1 of this appendix.

3.2.4 Temperature Settings for Separate Auxiliary Convertible Compartments. For separate auxiliary convertible compartments tested as freezer compartments, the median setting shall be within 2 °F (1.1 °C) of the standardized temperature, and the warmest setting shall be above 10 °F (−12.2 °C). For separate auxiliary convertible compartments tested as fresh food compartments, the median setting shall be within 2 °F (1.1 °C) of the standardized temperature, and the coldest setting shall be below 40 °F (4.4 °C). For compartments where control settings are not expressed as particular temperatures, the measured temperature of the convertible compartment rather than the settings shall meet the specified criteria.

4. Test Period

Tests shall be performed by establishing the conditions set forth in section 2, and using the control settings set forth in section 3.

4.1 Nonautomatic Defrost. If the model being tested has no automatic defrost system, the test time period shall start after steady-state conditions have been achieved and be no less than 3 hours in duration. During the test period, the compressor motor shall complete two or more whole compressor cycles. (A compressor cycle is a complete ''on'' and a complete ''off'' period of the motor). If no ''off'' cycling will occur, as determined during the stabilization period, the test period shall be 3 hours. If incomplete cycling occurs (i.e. less than two compressor cycles during a 24-hour period), the results of the 24-hour period shall be used.

4.2 Automatic Defrost. If the model being tested has an automatic defrost system, the test time period shall start after steady-state conditions have been achieved and be from one point during a defrost period to the same point during the next defrost period. If the model being tested has a long-time automatic defrost system, the alternative provisions of 4.2.1 may be used. If the model being tested has a variable defrost control, the provisions of section 4.2.2 shall apply. If the model has a dual compressor system with automatic defrost for both systems, the provisions of 4.2.3 shall apply.

4.2.1 Long-time Automatic Defrost. If the model being tested has a long-time automatic defrost system, the test time period may consist of two parts. The first part would be the same as the test for a unit having no defrost provisions (section 4.1). The second part would start when a defrost cycle is initiated when the compressor ''on'' cycle is terminated prior to start of the defrost heater and terminates at the second turn ''on'' of the compressor or 4 hours from the initiation of the defrost heater, whichever comes first. See diagram in Figure 1 to this section.

Figure 1
Long-time Automatic Defrost Diagram

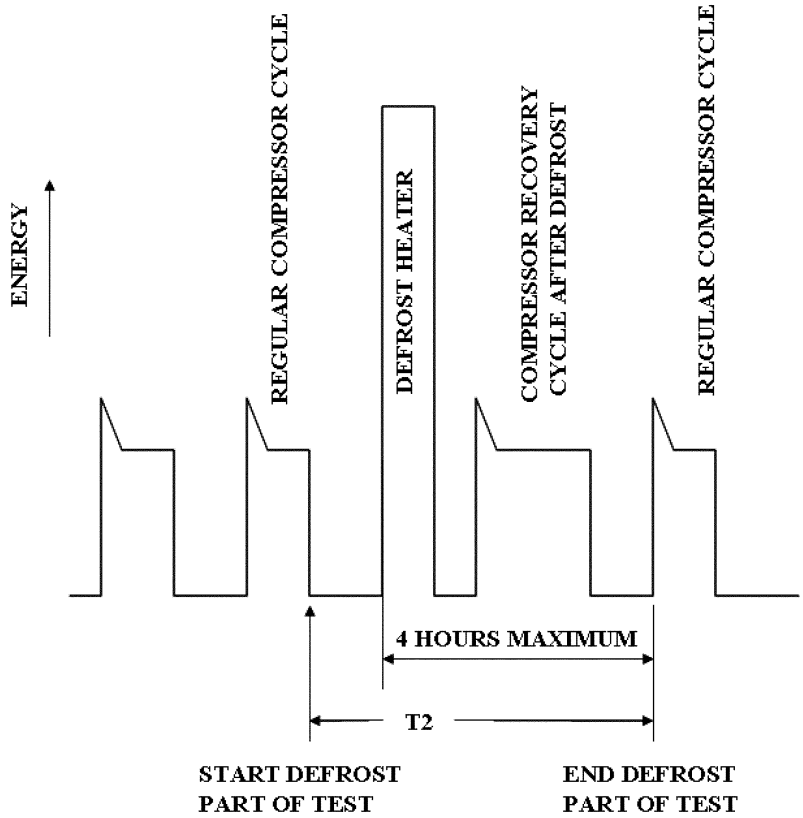

4.2.2 Variable Defrost Control. If the model being tested has a variable defrost control system, the test shall consist of the same two parts as the test for long-time automatic defrost (section 4.2.1).

4.2.3 Dual Compressor Systems with Automatic Defrost. If the model being tested has separate compressor systems for the refrigerator and freezer sections, each with its own automatic defrost system, then the two-part method in 4.2.1 shall be used. The second part of the method will be conducted separately for each automatic defrost system. The components (compressor, fan motors, defrost heaters, anti-sweat heaters, etc.) associated with each system will be identified and their energy consumption will be separately measured during each test.

5. Test Measurements

5.1 Temperature Measurements. Temperature measurements shall be made at the locations prescribed in Figures 7.1 and 7.2 of HRF–1–1979 (incorporated by reference; see § 430.3) and shall be accurate to within ±0.5 °F (0.3 °C). No freezer temperature measurements need be taken in an all-refrigerator model. If the interior arrangements of the cabinet do not conform with those shown in Figure 7.1 and 7.2 of HRF–1–1979, the product may be tested by relocating the temperature sensors from the locations specified in the figures to avoid interference with hardware or components within the cabinet, in which case the specific locations used for the temperature sensors shall be noted in the test data records maintained by the manufacturer in accordance with 10 CFR 429.14, and the certification report shall indicate that non-standard sensor locations were used.

5.1.1 Measured Temperature. The measured temperature of a compartment is to be the average of all sensor temperature readings taken in that compartment at a particular time. Measurements shall be taken at regular intervals not to exceed four minutes.

5.1.2 Compartment Temperature. The compartment temperature for each test period shall be an average of the measured temperatures taken in a compartment during one or more complete compressor cycles. One compressor cycle is one complete motor ''on'' and one complete motor ''off'' period. For long-time automatic defrost models, compartment temperatures shall be those measured in the first part of the test period specified in section 4.2.1. For models with variable defrost controls, compartment temperatures shall be those measured in the first part of the test period specified in section 4.2.2.

5.1.2.1 The number of complete compressor cycles over which the measured temperatures in a compartment are to be averaged to determine compartment temperature shall be equal to the number of minutes between measured temperature readings, rounded up to the next whole minute or a number of complete compressor cycles over a time period exceeding 1 hour, whichever is greater. One of the compressor cycles shall be the last complete compressor cycle during the test period.

5.1.2.2 If no compressor cycling occurs, the compartment temperature shall be the average of the measured temperatures taken during the last 32 minutes of the test period.

5.1.2.3 If incomplete compressor cycling occurs, the compartment temperatures shall be the average of the measured temperatures taken during the last three hours of the last complete compressor ''on'' period.

5.1.3 Fresh Food Compartment Temperature. The fresh food compartment temperature shall be calculated as:

$$TR = \frac{\sum_{i=1}^{R}(TR_i) \times (VR_i)}{\sum_{i=1}^{R}(VR_i)}$$

Where:

R is the total number of applicable fresh food compartments, which include the first fresh food compartment and any number of separate auxiliary fresh food compartments (including separate auxiliary convertible compartments tested as fresh food compartments in accordance with section 2.7);

TR_i is the compartment temperature of fresh food compartment ''i'' determined in accordance with section 5.1.2; and

VR_i is the volume of fresh food compartment ''i''.

5.1.4 Freezer Compartment Temperature. The freezer compartmenttemperature shall be calculated as:

$$TF = \frac{\sum_{i=1}^{F}(TF_i) \times (VF_i)}{\sum_{i=1}^{F}(VF_i)}$$

Where:

F is the total number of applicable freezer compartments, which include the first freezer compartment and any number of separate auxiliary freezer compartments (including separate auxiliary convertible compartments tested as freezer compartments in accordance with section 2.7);

TF_i is the compartment temperature of freezer compartment ''i'' determined in accordance with section 5.1.2; and

VF_i is the volume of freezer compartment ''i''.

5.2 Energy Measurements

5.2.1 Per-day Energy Consumption. The energy consumption in kilowatt-hours per day for each test period shall be the energy expended during the test period as specified in section 4 adjusted to a 24-hour period. The adjustment shall be determined as follows:

5.2.1.1 Nonautomatic and Automatic Defrost Models. The energy consumption in kilowatt-hours per day shall be calculated equivalent to:

$$ET = EP \times 1440/T$$

Where:

ET = test cycle energy expended in kilowatt-hours per day;
EP = energy expended in kilowatt-hours during the test period;
T = length of time of the test period in minutes; and
1440 = conversion factor to adjust to a 24-hour period in minutes per day.

5.2.1.2 Long-time Automatic Defrost. If the two-part test method is used, the energy consumption in kilowatt-hours per day shall be calculated equivalent to:

$$ET = (1440 \times EP1/T1) + (EP2 - (EP1 \times T2/T1)) \times (12/CT)$$

Where:

ET and 1440 are defined in 5.2.1.1;
EP1 = energy expended in kilowatt-hours during the first part of the test;
EP2 = energy expended in kilowatt-hours during the second part of the test;
T1 and T2 = length of time in minutes of the first and second test parts respectively;
CT = defrost timer run time or compressor run time between defrosts in hours required to cause it to go through a complete cycle, rounded to the nearest tenth of an hour; and
12 = factor to adjust for a 50-percent run time of the compressor in hours per day.

5.2.1.3 Variable Defrost Control. The energy consumption in kilowatt-hours per day shall be calculated equivalent to:

$$ET = (1440 \times EP1/T1) + (EP2 - (EP1 \times T2/T1)) \times (12/CT),$$

Where:

1440 is defined in 5.2.1.1 and EP1, EP2, T1, T2, and 12 are defined in 5.2.1.2;
$CT = (CT_L \times CT_M)/(F \times (CT_M - CT_L) + CT_L)$;
CT_L = least or shortest compressor run time between defrosts in hours rounded to the nearest tenth of an hour (greater than or equal to 6 but less than or equal to 12 hours);
CT_M = maximum compressor run time between defrosts in hours rounded to the nearest tenth of an hour (greater than CT_L but not more than 96 hours);
F = ratio of per day energy consumption in excess of the least energy and the maximum difference in per-day energy consumption and is equal to 0.20;
For variable defrost models with no values for CT_L and CT_M in the algorithm, the default values of 12 and 84 shall be used, respectively.

5.2.1.4 Dual Compressor Systems with Dual Automatic Defrost. The two-part test method in section 4.1.2.4 must be used, and the energy consumption in kilowatt-hours per day shall be calculated equivalent to:

$$ET = (1440 \times EP1/T1) + (EP2_F - (EP_F \times T2/T1)) \times (12/CT_F) + (EP2_R - (EP_R \times T3/T1)) \times (12/CT_R)$$

Where:

1440, EP1, T1, EP2, 12, and CT are defined in 5.2.1.2;
EP_F = freezer system energy in kilowatt-hours expended during the first part of the test;
$EP2_F$ = freezer system energy in kilowatt-hours expended during the second part of the test for the freezer system;
EP_R = refrigerator system energy in kilowatt-hours expended during the first part of the test;
$EP2_R$ = refrigerator system energy in kilowatt-hours expended during the second part of the test for the refrigerator system;
T2 and T3 = length of time in minutes of the second test part for the freezer and refrigerator systems respectively;
CT_F = compressor run time between freezer defrosts (in hours rounded to the nearest tenth of an hour); and
CT_R = compressor run time between refrigerator defrosts (in hours rounded to the nearest tenth of an hour).

5.3 Volume measurements. The electric refrigerator or electric refrigerator-freezer total refrigerated volume, VT, shall be measured in accordance with HRF–1–1979, section 3.20 and sections 4.2 through 4.3 and be calculated equivalent to:

$$VT=VF+VFF$$

where

VT=total refrigerated volume in cubic feet,
VF=freezer compartment volume in cubic feet, and
VFF=fresh food compartment volume in cubic feet.

5.4 Externally vented refrigerator or refrigerator-freezer units. All test measurements for the externally vented refrigerator or refrigerator-freezer shall be made in accordance with the requirements of other sections of this appendix, except as modified in this section 5.4 or other sections expressly applicable to externally vented refrigerators or refrigerator-freezers.

5.4.1 Operability of thermostatic and mixing of air controls. Prior to conducting energy consumption tests, the operability of thermostatic controls that permit the mixing of exterior and ambient air when exterior air temperatures are less than 60 °F must be verified. The operability of such controls shall be verified by operating the unit under ambient air temperature of 90 °F and exterior air temperature of 45 °F. If the inlet air

entering the condenser or condenser/compressor compartment is maintained at 60 °F, plus or minus three degrees, energy consumption of the unit shall be measured under 5.4.2.2 and 5.4.2.3. If the inlet air entering the condenser or condenser/compressor compartment is not maintained at 60 °F, plus or minus three degrees, energy consumption of the unit shall also be measured under 5.4.2.4.

5.4.2 Energy consumption tests.

5.4.2.1 Correction factor test. To enable calculation of a correction factor, K, two full cycle tests shall be conducted to measure energy consumption of the unit with air mixing controls disabled and the condenser inlet air temperatures set at 90 °F (32.2 °C) and 80 °F (26.7 °C). Both tests shall be conducted with all compartment temperature controls set at the position midway between their warmest and coldest settings and the anti-sweat heater switch off. Record the energy consumptions ec_{90} and ec_{80}, in kWh/day.

5.4.2.2 Energy consumption at 90 °F. The unit shall be tested at 90 °F (32.2 °C) exterior air temperature to record the energy consumptions $(e_{90})_i$ in kWh/day. For a given setting of the anti-sweat heater, i corresponds to each of the two states of the compartment temperature control positions.

5.4.2.3 Energy consumption at 60 °F. The unit shall be tested at 60 °F (26.7 °C) exterior air temperature to record the energy consumptions $(e_{60})_i$ in kWh/day. For a given setting of the anti-sweat heater, i corresponds to each of the two states of the compartment temperature control positions.

5.4.2.4 Energy consumption if mixing controls do not operate properly. If the operability of temperature and mixing controls has not been verified as required under 5.4.1, the unit shall be tested at 50 °F (10.0 °C) and 30 °F (−1.1 °C) exterior air temperatures to record the energy consumptions $(e_{50})_i$ and $(e_{30})_i$. For a given setting of the anti-sweat heater, i corresponds to each of the two states of the compartment temperature control positions.

6. Calculation of Derived Results from Test Measurements

6.1 Adjusted Total Volume.

6.1.1 Electric refrigerators. The adjusted total volume, VA, for electric refrigerators under test shall be defined as:

$$VA=(VF\times CR)+VFF$$

where

VA=adjusted total volume in cubic feet,
VF and VFF are defined in 5.3, and
CR=adjustment factor of 1.44 for refrigerators other than all-refrigerators, or 1.0 for all-refrigerators, dimensionless,

6.1.2 Electric refrigerator-freezers. The adjusted total volume, VA, for electric refrigerator-freezers under test shall be calculated as follows:

$$VA=(VF\times CRF)+VFF$$

where

VF and VFF are defined in 5.3 and VA is defined in 6.1.1,
CRF=adjustment factor of 1.63, dimensionless,

6.2 Average Per-Cycle Energy consumption.

6.2.1 All-refrigerator Models. The average per-cycle energy consumption for a cycle type is expressed in kilowatt-hours per cycle to the nearest one hundredth (0.01) kilowatt-hour and shall depend upon the temperature attainable in the fresh food compartment as shown below.

6.2.1.1 If the fresh food compartment temperature is always below 38.0 °F. (3.3 °C.), the average per-cycle energy consumption shall be equivalent to:

$$E=ET1$$

where

E=Total per-cycle energy consumption in kilowatt-hours per day,
ET is defined in 5.2.1, and Number 1 indicates the test period during which the highest fresh food compartment temperature is measured.

6.2.1.2 If one of the fresh food compartment temperatures measured for a test period is greater than 38.0 °F (3.3 °C), the average per-cycle energy consumption shall be equivalent to:

$$E = ET1 + ((ET2-ET1)\times(38.0 - TR1)/(TR2 - TR1))$$

Where:

E is defined in 6.2.1.1;
ET is defined in 5.2.1;
TR = Fresh food compartment temperature determined according to 5.1.3 in degrees F;
The numbers 1 and 2 indicate measurements taken during the first and second test period as appropriate; and
38.0 = Standardized fresh food compartment temperature in degrees F.

6.2.2 Refrigerators and refrigerator-freezers. The average per-cycle energy consumption for a cycle type is expressed in kilowatt-hours per-cycle to the nearest one hundredth (0.01) kilowatt-hour and shall be defined in the applicable following manner.

6.2.2.1 If the fresh food compartment temperature is always at or below 45 °F. (7.2 °C.) in both of the tests and the freezer compartment temperature is always at or below 15 °F. (−9.4 °C.) in both tests of a refrigerator or at or below 5 °F. (−15 °C.) in both tests of a refrigerator-freezer, the per-cycle energy consumption shall be:

E=ET1

where

E is defined in 6.2.1.1,

ET is defined in 5.2.1, and

Number 1 indicates the test period during which the highest freezer compartment temperature was measured.

6.2.2.2 If the conditions of 6.2.2.1 do not exist, the per-cycle energy consumption shall be defined by the higher of the two values calculated by the following two formulas:

$E = ET1 + ((ET2 - ET1) \times (45.0 - TR1)/(TR2 - TR1))$

and

$E = ET1 + ((ET2 - ET1) \times (k - TF1)/(TF2 - TF1))$

Where:

E is defined in 6.2.1.1;

ET is defined in 5.2.1;

TR and numbers 1 and 2 are defined in 6.2.1.2;

TF = Freezer compartment temperature determined according to 5.1.4 in degrees F;

45.0 is a specified fresh food compartment temperature in degrees F; and

k is a constant 15.0 for refrigerators or 5.0 for refrigerator-freezers each being standardized freezer compartment temperature in degrees F.

6.2.3 Variable Anti-Sweat Heater Models. The standard cycle energy consumption of an electric refrigerator-freezer with a variable anti-sweat heater control (E_{std}), expressed in kilowatt-hours per day, shall be calculated equivalent to:

E_{std} = E + (Correction Factor) where E is determined by 6.2.1.1, 6.2.1.2, 6.2.2.1, or 6.2.2.2, whichever is appropriate, with the anti-sweat heater switch in the ''off'' position or, for products without anti-sweat heater switches, the anti-sweat heater in its lowest energy use state.

Correction Factor = (Anti-sweat Heater Power × System-loss Factor) × (24 hrs/1 day) × (1 kW/1000 W)

Where:

Anti-sweat Heater Power = 0.034 * (Heater Watts at 5%RH)
+ 0.211 * (Heater Watts at 15%RH)
+ 0.204 * (Heater Watts at 25%RH)
+ 0.166 * (Heater Watts at 35%RH)
+ 0.126 * (Heater Watts at 45%RH)
+ 0.119 * (Heater Watts at 55%RH)
+ 0.069 * (Heater Watts at 65%RH)
+ 0.047 * (Heater Watts at 75%RH)
+ 0.008 * (Heater Watts at 85%RH)
+ 0.015 * (Heater Watts at 95%RH)

Heater Watts at a specific relative humidity = the nominal watts used by all heaters at that specific relative humidity, 72 °F (22.2 °C) ambient, and DOE reference temperatures of fresh food (FF) average temperature of 45 °F (7.2 °C) and freezer (FZ) average temperature of 5 °F (−15 °C).

System-loss Factor = 1.3

6.3 Externally vented refrigerator or refrigerator-freezers. Per-cycle energy consumption measurements for the externally vented refrigerator or refrigerator-freezer shall be calculated in accordance with the requirements of this appendix, as modified in sections 6.3.1–6.3.7.

6.3.1 Correction factor. A correction factor, K, shall be calculated as:

$K = ec_{90}/ec_{80}$

where ec_{90} and ec_{80} = the energy consumption test results as determined under 5.4.2.1.

6.3.2 Combining test results of different settings of compartment temperature controls. For a given setting of the anti-sweat heater, follow the calculation procedures of 6.2 to combine the test results for energy consumption of the unit at different temperature control settings for each condenser inlet air temperature tested under 5.4.2.2, 5.4.2.3, and 5.4.2.4, where applicable, $(e_{90})_i$, $(e_{60})_i$, $(e_{50})_i$, and $(e_{30})_i$. The combined values are ε_{90}, ε_{60}, ε_{50}, and ε_{30}, where applicable, in kWh/day.

6.3.3 Energy consumption corrections. For a given setting of the anti-sweat heater, the energy consumptions ε_{90}, ε_{60}, ε_{50}, and ε_{30} calculated in 6.3.2 shall be adjusted by multiplying the correction factor K to obtain the corrected energy consumptions per day, in kWh/day:

$E_{90} = K \times \varepsilon_{90}$,
$E_{60} = K \times \varepsilon_{60}$
$E_{50} = K \times \varepsilon_{50}$, and
$E_{30} = K \times \varepsilon_{30}$

where,

K is determined under section 6.3.1, and ε_{90}, ε_{60}, ε_{50}, and ε_{30} are determined under section 6.3.2.

6.3.4 Energy profile equation. For a given setting of the anti-sweat heater, the energy consumption E_X, in kWh/day, at a specific exterior air temperature between 80 °F (26.7 °C) and 60 °F (26.7 °C) shall be calculated by the following equation:

$E_X = a + bT_X$,

where,

T_X = exterior air temperature in °F;
$a = 3E_{60} - 2E_{90}$, in kWh/day;
$b = (E_{90} - E_{60})/30$, in kWh/day per °F.

6.3.5 Energy consumption at 80 °F (26.7 °C), 75 °F (23.9 °C) and 65 °F (18.3 °C). For a given setting of the anti-sweat heater, calculate the energy consumptions at 80 °F (26.7 °C), 75 °F (23.9 °C) and 65 °F (18.3 °C) exterior air temperatures, E_{80}, E_{75} and E_{65}, respectively, in kWh/day, using the equation in 6.3.4.

6.3.6 National average per cycle energy consumption. For a given setting of the anti-

sweat heater, calculate the national average energy consumption, E_N, in kWh/day, using one of the following equations:

$E_N = 0.523 \times E_{60} + 0.165 \times E_{65} + 0.181 \times E_{75} + 0.131 \times E_{80}$, for units not tested under 5.4.2.4,

$E_N = 0.257 \times E_{30} + 0.266 \times E_{50} + 0.165 \times E_{65} + 0.181 \times E_{75} + 0.131 \times E_{80}$, for units tested under 5.4.2.4,

where,

E_{30}, E_{50}, and E_{60} are defined in 6.3.3,
E_{65}, E_{75}, and E_{80} are defined in 6.3.5, and
the coefficients are weather associated weighting factors.

6.3.7 Regional average per cycle energy consumption. If regional average per cycle energy consumption is required to be calculated, for a given setting of the anti-sweat heater, calculate the regional average per cycle energy consumption, E_R, in kWh/day, for the regions in figure 1 using one of the following equations and the coefficients in the table A:

$E_R = a_1 \times E_{60} + c \times E_{65} + d \times E_{75} + e \times E_{80}$, for a unit that is not required to be tested under 5.4.2.4,

$E_R = a \times E_{30} + b \times E_{50} + c \times E_{65} + d \times E_{75} + e \times E_{80}$, for a unit tested under 5.4.2.4,

where:

E_{30}, E_{50}, and E_{60} are defined in 6.3.3,
E_{65}, E_{75}, and E_{80} are defined in 6.3.5, and
a_1, a, b, c, d, e are weather associated weighting factors for the Regions, as specified in Table A:

TABLE A—COEFFICIENTS FOR CALCULATING REGIONAL AVERAGE PER CYCLE ENERGY CONSUMPTION

[Weighting Factors]

Regions	a_1	a	b	c	d	e
I	0.282	0.039	0.244	0.194	0.326	0.198
II	0.486	0.194	0.293	0.191	0.193	0.129
III	0.584	0.302	0.282	0.178	0.159	0.079
IV	0.664	0.420	0.244	0.161	0.121	0.055

Figure 2: Weather Regions for the United States

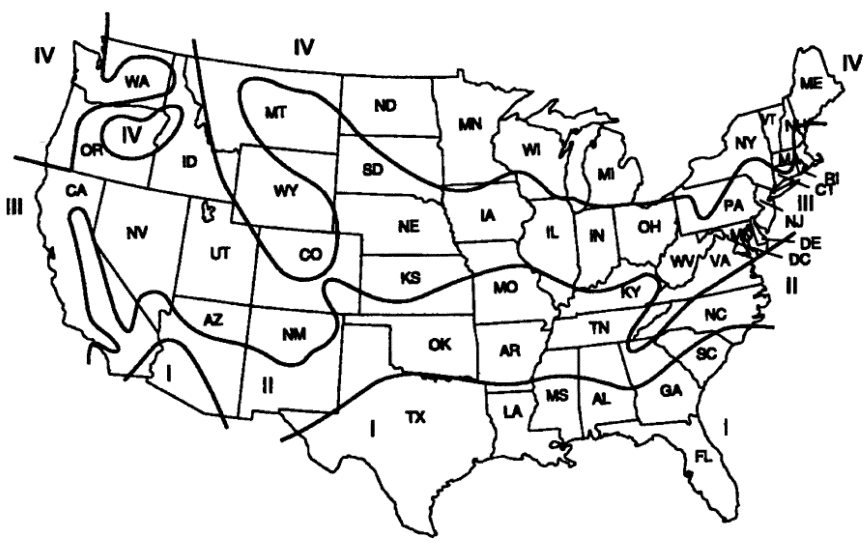

Alaska: Region IV

Hawaii: Region I

7. Test Procedure Waivers

To the extent that the procedures contained in this appendix do not provide a means for determining the energy consumption of a refrigerator or refrigerator-freezer, a manufacturer must obtain a waiver under 10 CFR 430.27 to establish an acceptable test procedure for each such product. Such instances could, for example, include situations where the test set-up for a particular refrigerator or refrigerator-freezer basic model is not clearly defined by the provisions of section 2. For details regarding the criteria and procedures for obtaining a waiver, please refer to 10 CFR 430.27.

[47 FR 34526, Aug. 10, 1982; 48 FR 13013, Mar. 29, 1983, as amended at 54 FR 36240, Aug. 31, 1989; 54 FR 38788, Sept. 20, 1989; 62 FR 47539, 47540, Sept. 9, 1997; 68 FR 10960, Mar. 7, 2003; 75 FR 78860, Dec. 16, 2010; 76 FR 12502, Mar. 7, 2011; 76 FR 24781, May 2, 2011]

APPENDIX B TO SUBPART B OF PART 430—UNIFORM TEST METHOD FOR MEASURING THE ENERGY CONSUMPTION OF FREEZERS

The provisions of appendix B shall apply to all products manufactured on or after the effective date of any amended standards promulgated by DOE pursuant to Section 325(b)(4) of the Energy Policy and Conservation Act of 1975, as amended by the Energy Independence and Security Act of 2007 (to be codified at 42 U.S.C. 6295(b)(4)).

1. Definitions

Section 3, *Definitions*, of HRF–1–2008 (incorporated by reference; see §430.3) applies to this test procedure.

1.1 ''Adjusted total volume'' means the product of the freezer volume as defined in HRF–1–2008 (incorporated by reference; see §430.3) in cubic feet multiplied by an adjustment factor.

1.2 ''Anti-sweat heater'' means a device incorporated into the design of a freezer to prevent the accumulation of moisture on exterior or interior surfaces of the cabinet.

1.3 ''Anti-sweat heater switch'' means a user-controllable switch or user interface which modifies the activation or control of anti-sweat heaters.

1.4 ''Automatic defrost'' means a system in which the defrost cycle is automatically initiated and terminated, with resumption of normal refrigeration at the conclusion of defrost operation. The system automatically prevents the permanent formation of frost on all refrigerated surfaces. Nominal refrigerated food temperatures are maintained during the operation of the automatic defrost system.

1.5 ''Automatic icemaker'' means a device that can be supplied with water without user intervention, either from a pressurized water supply system or by transfer from a water reservoir, that automatically produces, harvests, and stores ice in a storage bin, with means to automatically interrupt the harvesting operation when the ice storage bin is filled to a pre-determined level.

1.6 ''Cycle'' means the period of 24 hours for which the energy use of a freezer is calculated as though the consumer-activated compartment temperature controls were set to maintain the standardized temperature (see section 3.2).

1.7 ''Cycle type'' means the set of test conditions having the calculated effect of operating a freezer for a period of 24 hours with the consumer-activated controls other than the compartment temperature control set to establish various operating characteristics.

1.8 ''HRF–1–2008'' means AHAM Standard HRF–1–2008, Association of Home Appliance Manufacturers, Energy and Internal Volume of Refrigerating Appliances (2008), including Errata to Energy and Internal Volume of Refrigerating Appliances, Correction Sheet issued November 17, 2009. Only sections of HRF–1–2008 (incorporated by reference; see §430.3) specifically referenced in this test procedure are part of this test procedure. In cases where there is a conflict, the language of the test procedure in this appendix takes precedence over HRF–1–2008.

1.9 ''Long-time automatic defrost'' means an automatic defrost system where successive defrost cycles are separated by 14 hours or more of compressor operating time.

1.10 ''Quick freeze'' means an optional feature on freezers that is initiated manually. It bypasses the thermostat control and operates continually until the feature is terminated either manually or automatically.

1.11 ''Separate auxiliary compartment'' means a freezer compartment other than the first freezer compartment of a freezer having more than one compartment. Access to a separate auxiliary compartment is through a separate exterior door or doors rather than through the door or doors of another compartment. Separate auxiliary freezer compartments may not be larger than the first freezer compartment.

1.12 ''Special compartment'' means any compartment without doors directly accessible from the exterior, and with separate temperature control that is not convertible from fresh food temperature range to freezer temperature range.

1.13 ''Stabilization period'' means the total period of time during which steady-state conditions are being attained or evaluated.

1.14 ''Standard cycle'' means the cycle type in which the anti-sweat heater switch, when provided, is set in the highest energy-consuming position.

1.15 ''Variable defrost control'' means an automatic defrost system in which successive defrost cycles are determined by an operating condition variable or variables other than solely compressor operating time. This includes any electrical or mechanical device performing this function. A control scheme that changes the defrost interval from a fixed length to an extended length (without any intermediate steps) is not considered a variable defrost control. A variable defrost control feature should predict the accumulation of frost on the evaporator and react accordingly. Therefore, the times between defrost should vary with different usage patterns and include a continuum of lengths of time between defrosts as inputs vary.

2. Test Conditions

2.1 Ambient Temperature. The ambient temperature shall be 90.0 ±1.0 °F (32.2 ±0.6 °C) during the stabilization period and the test period.

2.2 Operational Conditions. The freezer shall be installed and its operating conditions maintained in accordance with HRF–1–2008, (incorporated by reference; see §430.3), sections 5.3 through section 5.5.5.5 (but excluding sections 5.5.5.2 and 5.5.5.4). The quick freeze option shall be switched off except as specified in section 3.1. Additional clarifications are noted in sections 2.3 through 2.6.

2.3 Anti-Sweat Heaters. The anti-sweat heater switch is to be on during one test and off during a second test. In the case of an electric freezer with variable anti-sweat heater control, the standard cycle energy use shall be the result of the calculation described in 6.2.2.

2.4 The cabinet and its refrigerating mechanism shall be assembled and set up in accordance with the printed consumer instructions supplied with the cabinet. Set-up of the freezer shall not deviate from these instructions, unless explicitly required or allowed by this test procedure. Specific required or allowed deviations from such set-up include the following:

(a) Connection of water lines and installation of water filters are not required;

(b) Clearance requirements from surfaces of the product shall be as described in section 2.6 below;

(c) The electric power supply shall be as described in HRF–1–2008 (incorporated by reference; see §430.3) section 5.5.1;

(d) Temperature control settings for testing shall be as described in section 3 of this appendix. Settings for special compartments shall be as described in section 2.5 of this appendix;

(e) The product does not need to be anchored or otherwise secured to prevent tipping during energy testing;

(f) All the product's chutes and throats required for the delivery of ice shall be free of packing, covers, or other blockages that may be fitted for shipping or when the icemaker is not in use; and

(g) Ice storage bins shall be emptied of ice.

For cases in which set-up is not clearly defined by this test procedure, manufacturers must submit a petition for a waiver (see section 7).

2.5 Special compartments shall be tested with controls set to provide the coldest temperature. However, for special compartments in which temperature control is achieved using the addition of heat (including resistive electric heating, refrigeration system waste heat, or heat from any other source, but excluding the transfer of air from another part of the interior of the product) for any part of the controllable temperature range of that compartment, the product energy use shall be determined by averaging two sets of tests. The first set of tests shall be conducted with such special compartments at their coldest settings, and the second set of tests shall be conducted with such special compartments at their warmest settings. The requirements for the warmest or coldest temperature settings of this section do not apply to features or functions associated with temperature control (such as quick freeze) that are initiated manually and terminated automatically within 168 hours.

2.6 The space between the back of the cabinet and a vertical surface (the test room wall or simulated wall) shall be the minimum distance in accordance with the manufacturer's instructions. However, the clearance shall not be greater than 2 inches (51 mm) from the plane of the cabinet's back panel to the vertical surface. If permanent rear spacers extend further than this distance, the appliance shall be located with the spacers in contact with the vertical surface.

2.7 Steady State Condition. Steady-state conditions exist if the temperature measurements taken at 4-minute intervals or less during a stabilization period are not changing at a rate greater than 0.042 °F (0.023 °C) per hour as determined by the applicable condition of A or B described below.

A—The average of the measurements during a 2-hour period if no cycling occurs or during a number of complete repetitive compressor cycles occurring through a period of no less than 2 hours is compared to the average over an equivalent time period with 3 hours elapsing between the two measurement periods.

B—If A above cannot be used, the average of the measurements during a number of complete repetitive compressor cycles occurring through a period of no less than 2 hours and including the last complete cycle before a defrost period (or if no cycling occurs, the average of the measurements during the last 2 hours before a defrost period) are compared to the same averaging period before the following defrost period.

3. Test Control Settings

3.1 Model with No User Operable Temperature Control. A test shall be performed during which the compartment temperature and energy use shall be measured. A second test shall be performed with the temperature control electrically short circuited to cause the compressor to run continuously. If the model has the quick freeze option, this option must be used to bypass the temperature control.

3.2 Model with User Operable Temperature Control. Testing shall be performed in accordance with one of the following sections using the standardized temperature of 0.0 °F (−17.8 °C).

For the purposes of comparing compartment temperatures with standardized temperatures, as described in sections 3.2.1 and 3.2.2, the freezer compartment temperature shall be as specified in section 5.1.3.

3.2.1 A first test shall be performed with all temperature controls set at their median position midway between their warmest and coldest settings. For mechanical control systems, knob detents shall be mechanically defeated if necessary to attain a median setting. For electronic control systems, the test shall be performed with all compartment temperature controls set at the average of the coldest and warmest settings—if there is no setting equal to this average, the setting closest to the average shall be used. If there are two such settings equally close to the average, the higher of these temperature control settings shall be used. A second test shall be performed with all controls set at either their warmest or their coldest setting (not electrically or mechanically bypassed), whichever is appropriate, to attempt to achieve compartment temperatures measured during the two tests which bound (*i.e.*, one is above and one is below) the standardized temperature. If the compartment temperatures measured during these two tests bound the standardized temperature, then these test results shall be used to determine energy consumption. If the compartment temperature measured with all controls set at their coldest setting is above the standardized temperature, the tested unit fails the test and cannot be rated. If the compartment temperature measured with all controls set at their warmest setting is below the standardized temperature, then the result of this test alone will be used to determine energy consumption. Also see Table 1 below, which summarizes these requirements.

TABLE 1—TEMPERATURE SETTINGS FOR FREEZERS

First test		Second test		Energy calculation based on:
Settings	Results	Settings	Results	
Mid	Low	Warm ..	Low	Second Test Only.
	.....	.....	High	First and Second Tests.
	High	Cold	Low	First and Second Tests.
	.....	.....	High	No Energy Use Rating.

3.2.2 Alternatively, a first test may be performed with all temperature controls set at their warmest setting. If the compartment temperature is below the standardized temperature, then the result of this test alone will be used to determine energy consumption. If this condition is not met, then the unit shall be tested in accordance with section 3.2.1.

4. Test Period

Tests shall be performed by establishing the conditions set forth in section 2 and using the control settings as set forth in section 3 above.

4.1 Nonautomatic Defrost. If the model being tested has no automatic defrost system, the test time period shall start after steady-state conditions have been achieved and be no less than 3 hours in duration. During the test period, the compressor motor shall complete two or more whole compressor cycles. (A compressor cycle is a complete ''on'' and a complete ''off'' period of the motor.) If no ''off'' cycling will occur, as determined during the stabilization period, the test period shall be 3 hours. If incomplete cycling occurs (less than two compressor cycles during a 24-hour period), the results of the 24-hour period shall be used.

4.2 Automatic Defrost. If the model being tested has an automatic defrost system, the test time period shall start after steady-state conditions have been achieved and be from one point during a defrost period to the same point during the next defrost period. If the model being tested has a long-time automatic defrost system, the alternate provisions of 4.2.1 may be used. If the model being tested has a variable defrost control, the provisions of 4.2.2 shall apply.

4.2.1 Long-time Automatic Defrost. If the model being tested has a long-time automatic defrost system, the two-part test described in this section may be used. The first part is a stable period of compressor operation that includes no portions of the defrost cycle, such as precooling or recovery, that is otherwise the same as the test for a unit having no defrost provisions (section 4.1). The second part is designed to capture the energy consumed during all of the events occurring with the defrost control sequence that are outside of stable operation.

4.2.1.1 Cycling Compressor System. For a system with a cycling compressor, the second part of the test starts at the termination of the last regular compressor ''on'' cycle. The average temperature of the compartment measured from the termination of the previous compressor ''on'' cycle to the termination of the last regular compressor ''on'' cycle must be within 0.5 °F (0.3 °C) of the average temperature of the compartment measured for the first part of the test. If any compressor cycles occur prior to the defrost heater being energized that cause the average temperature in the compartment to deviate from the average temperature for the first part of the test by more than 0.5 °F (0.3 °C), these compressor cycles are not considered regular compressor cycles and must be included in the second part of the test. As an example, a ''precooling'' cycle, which is an extended compressor cycle that lowers the compartment temperature prior to energizing the defrost heater, must be included in the second part of the test. The test period for the second part of the test ends at the termination of the first regular compressor ''on'' cycle after the compartment temperatures have fully recovered to their stable conditions. The average temperature of the compartment measured from this termination of the first regular compressor ''on'' cycle until the termination of the next regular compressor ''on'' cycle must be within 0.5 °F (0.3 °C) of the average temperature of the compartment measured for the first part of the test. See Figure 1.

Figure 1

Long-time Automatic Defrost Diagram for Cycling Compressors

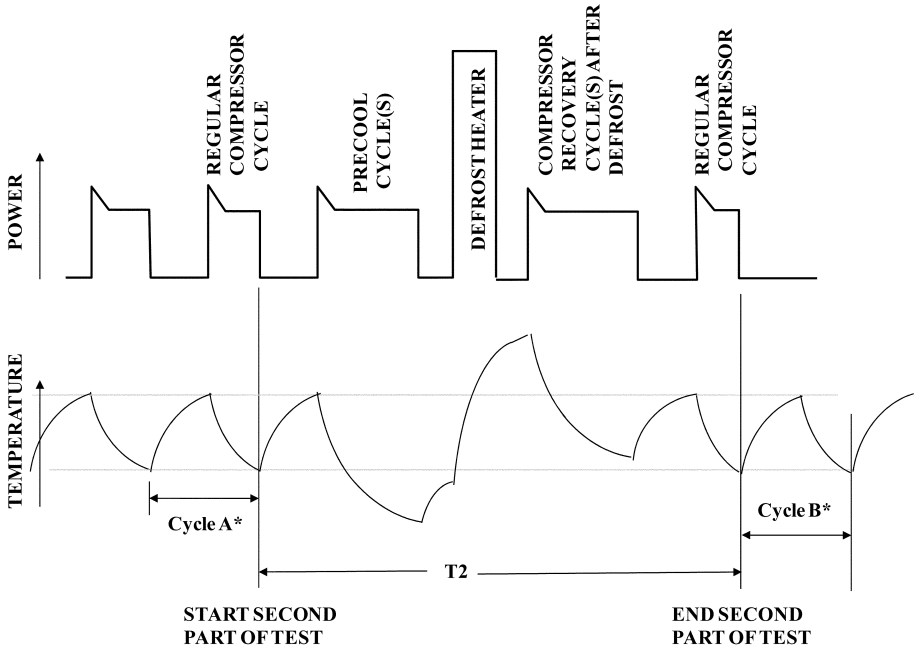

***Average compartment temperature during cycles A & B must be within 0.5 °F of the average temperature for the first part of the test.**

4.2.1.2 Non-cycling Compressor System. For a system with a non-cycling compressor, the second part of the test starts at a time before defrost during stable operation when the compartment temperature is within 0.5 °F (0.3 °C) of the average temperature of the compartment measured for the first part of the test. The second part stops at a time after defrost during stable operation when the compartment temperature is within 0.5

°F (0.3 °C) of the average temperature of the compartment measured for the first part of the test. See Figure 2.

Figure 2

Long-time Automatic Defrost Diagram for Non-cycling Compressors

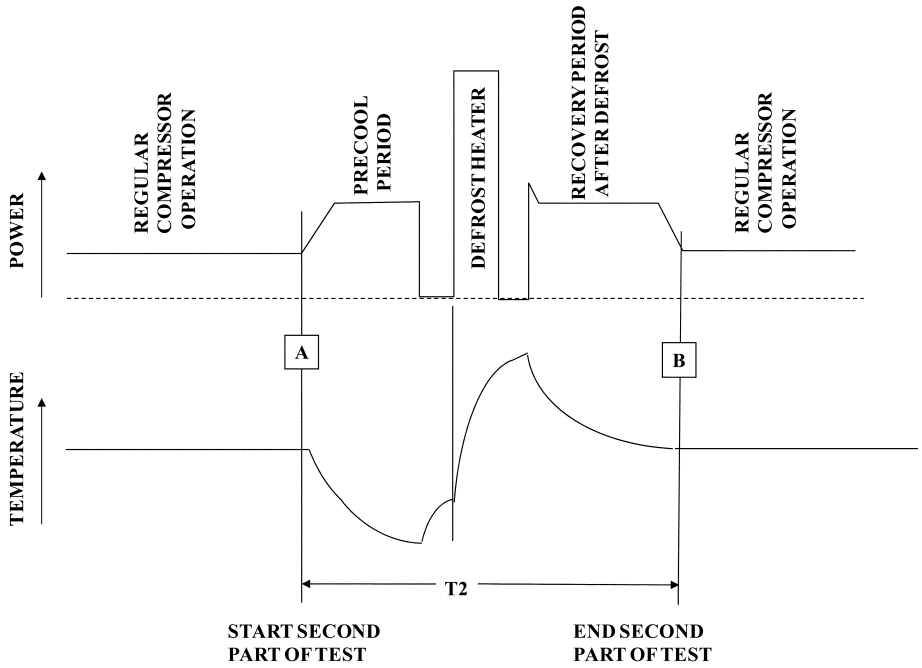

***Average compartment temperature at times A & B must be within 0.5 °F of the average temperature for the first part of the test.**

4.2.2 Variable Defrost Control. If the model being tested has a variable defrost control system, the test shall consist of the same two parts as the test for long-time automatic defrost (section 4.2.1).

5. Test Measurements

5.1 Temperature Measurements. Temperature measurements shall be made at the locations prescribed in Figure 5–2 of HRF–1–2008 (incorporated by reference; *see* §430.3) and shall be accurate to within ±0.5 °F (0.3 °C).

If the interior arrangements of the cabinet do not conform with those shown in Figure 5.2 of HRF–1–2008, the product may be tested by relocating the temperature sensors from the locations specified in the figures to avoid interference with hardware or components within the cabinet, in which case the specific locations used for the temperature sensors shall be noted in the test data records maintained by the manufacturer in accordance with 10 CFR 429.14, and the certification report shall indicate that non-standard sensor locations were used.

5.1.1 Measured Temperature. The measured temperature is to be the average of all sensor temperature readings taken at a particular point in time. Measurements shall be taken at regular intervals not to exceed 4 minutes.

5.1.2 Compartment Temperature. The compartment temperature for each test period shall be an average of the measured temperatures taken during the test period as defined in section 4. For long-time automatic defrost models, compartment temperature shall be

that measured in the first part of the test period specified in section 4.2.1. For models with variable defrost controls, compartment temperatures shall be those measured in the first part of the test period specified in section 4.2.2.

5.1.3 Freezer Compartment Temperature. The freezer compartment temperature shall be calculated as:

$$TF = \frac{\sum_{i=1}^{F}(TF_i) \times (VF_i)}{\sum_{i=1}^{F}(VF_i)}$$

Where:

F is the total number of applicable freezer compartments, which include the first freezer compartment and any number of separate auxiliary freezer compartments;

TF_i is the compartment temperature of freezer compartment ''i'' determined in accordance with section 5.1.2; and

VF_i is the volume of freezer compartment ''i''.

5.2 Energy Measurements:

5.2.1 Per-Day Energy Consumption. The energy consumption in kilowatt-hours per day for each test period shall be the energy expended during the test period as specified in section 4 adjusted to a 24-hour period. The adjustment shall be determined as follows:

5.2.1.1 Nonautomatic and Automatic Defrost Models. The energy consumption in kilowatt-hours per day shall be calculated equivalent to:

$$ET = (EP \times 1440 \times K)/T$$

Where:

ET = test cycle energy expended in kilowatt-hours per day;

EP = energy expended in kilowatt-hours during the test period;

T = length of time of the test period in minutes;

1440 = conversion factor to adjust to a 24-hour period in minutes per day; and

K = dimensionless correction factor of 0.7 for chest freezers and 0.85 for upright freezers to adjust for average household usage.

5.2.1.2 Long-time Automatic Defrost. If the two-part test method is used, the energy consumption in kilowatt-hours per day shall be calculated equivalent to:

$$ET = (1440 \times K \times EP1/T1) + (EP2 - (EP1 \times T2/T1)) \times K \times (12/CT)$$

Where:

ET, 1440, and K are defined in section 5.2.1.1;

EP1 = energy expended in kilowatt-hours during the first part of the test;

EP2 = energy expended in kilowatt-hours during the second part of the test;

CT = defrost timer run time or compressor run time between defrosts in hours required to cause it to go through a complete cycle, rounded to the nearest tenth of an hour;

12 = conversion factor to adjust for a 50 percent run time of the compressor in hours per day; and

T1 and T2 = length of time in minutes of the first and second test parts respectively.

5.2.1.3 Variable Defrost Control. The energy consumption in kilowatt-hours per day shall be calculated equivalent to:

$$ET = (1440 \times K \times EP1/T1) + (EP2 - (EP1 \times T2/T1)) \times K \times (12/CT),$$

Where:

ET, K, and 1440 are defined in section 5.2.1.1;

EP1, EP2, T1, T2, and 12 are defined in section 5.2.1.2;

$$CT = (CT_L \times CT_M)/(F \times (CT_M - CT_L) + CT_L)$$

Where:

CT_L = least or shortest compressor run time between defrosts in hours rounded to the nearest tenth of an hour (greater than or equal to 6 hours but less than or equal to 12 hours);

CT_M = maximum compressor run time between defrosts in hours rounded to the nearest tenth of an hour (greater than CT_L but not more than 96 hours);

F = ratio of per day energy consumption in excess of the least energy and the maximum difference in per-day energy consumption and is equal to 0.20.

For variable defrost models with no values for CT_L and CT_M in the algorithm, the default values of 6 and 96 shall be used, respectively.

5.3 Volume Measurements. The total refrigerated volume, VT, shall be measured in accordance with HRF–1–2008, (incorporated by reference; see §430.3), section 3.30 and sections 4.2 through 4.3.

In the case of freezers with automatic icemakers, the volume occupied by the automatic icemaker, including its ice storage bin, is to be included in the volume measurement.

6. Calculation of Derived Results From Test Measurements

6.1 Adjusted Total Volume. The adjusted total volume, VA, for freezers under test shall be defined as:

$VA = VT \times CF$

Where:

VA = adjusted total volume in cubic feet;
VT = total refrigerated volume in cubic feet; and
CF = dimensionless correction factor of 1.76.

6.2 Average Per-Cycle Energy Consumption

6.2.1 The average per-cycle energy consumption for a cycle type is expressed in kilowatt-hours per cycle to the nearest one hundredth (0.01) kilowatt-hour and shall depend on the compartment temperature attainable as shown below.

6.2.1.1 If the compartment temperature is always below 0.0 °F (−17.8 °C), the average per-cycle energy consumption shall be equivalent to:

$E = ET1 + IET$

Where:

E = total per-cycle energy consumption in kilowatt-hours per day;
ET is defined in 5.2.1;
The number 1 indicates the test period during which the highest compartment temperature is measured; and
IET, expressed in kilowatt-hours per cycle, equals 0.23 for a product with an automatic icemaker and otherwise equals 0 (zero).

6.2.1.2 If one of the compartment temperatures measured for a test period is greater than 0.0 °F (17.8 °C), the average per-cycle energy consumption shall be equivalent to:

$E = ET1 + ((ET2 - ET1) \times (0.0 - TF1)/(TF2 - TF1)) + IET$

Where:

E and IET are defined in 6.2.1.1 and ET is defined in 5.2.1;
TF = freezer compartment temperature determined according to 5.1.3 in degrees F;
The numbers 1 and 2 indicate measurements taken during the first and second test period as appropriate; and
0.0 = standardized compartment temperature in degrees F.

6.2.2 Variable Anti-Sweat Heater Models. The standard cycle energy consumption of an electric freezer with a variable anti-sweat heater control (E_{std}), expressed in kilowatt-hours per day, shall be calculated equivalent to:

E_{std} = E + (Correction Factor) where E is determined by 6.2.1.1, or 6.2.1.2, whichever is appropriate, with the anti-sweat heater switch in the ''off'' position or, for a product without an anti-sweat heater switch, the anti-sweat heater in its lowest energy use state.

Correction Factor = (Anti-sweat Heater Power × System-loss Factor) × (24 hrs/1 day) × (1 kW/1000 W)

Where:

Anti-sweat Heater Power = 0.034 * (Heater Watts at 5%RH)
+ 0.211 * (Heater Watts at 15%RH)
+ 0.204 * (Heater Watts at 25%RH)
+ 0.166 * (Heater Watts at 35%RH)
+ 0.126 * (Heater Watts at 45%RH)
+ 0.119 * (Heater Watts at 55%RH)
+ 0.069 * (Heater Watts at 65%RH)
+ 0.047 * (Heater Watts at 75%RH)
+ 0.008 * (Heater Watts at 85%RH)
+ 0.015 * (Heater Watts at 95%RH)

Heater Watts at a specific relative humidity = the nominal watts used by all heaters at that specific relative humidity, 72 °F ambient (22.2 °C), and DOE reference freezer (FZ) average temperature of 0 °F (−17.8 °C).

System-loss Factor = 1.3

7. Test Procedure Waivers

To the extent that the procedures contained in this appendix do not provide a means for determining the energy consumption of a freezer, a manufacturer must obtain a waiver under 10 CFR 430.27 to establish an acceptable test procedure for each such product. Such instances could, for example, include situations where the test set-up for a particular freezer basic model is not clearly defined by the provisions of section 2. For details regarding the criteria and procedures for obtaining a waiver, please refer to 10 CFR 430.27.

[75 FR 78866, Dec. 16, 2010, as amended at 76 FR 12502, Mar. 7, 2011; 76 FR 24781, May 2, 2011; 77 FR 3577, Jan. 25, 2012]

APPENDIX B1 TO SUBPART B OF PART 430—UNIFORM TEST METHOD FOR MEASURING THE ENERGY CONSUMPTION OF FREEZERS

The provisions of appendix B1 shall apply to all products manufactured prior to the effective date of any amended standards promulgated by DOE pursuant to Section 325(b)(4) of the Energy Policy and Conservation Act of 1975, as amended by the Energy Independence and Security Act of 2007 (to be codified at 42 U.S.C. 6295(b)(4)).

1. Definitions

Section 3, *Definitions*, of HRF–1–1979 (incorporated by reference; see §430.3) applies to this test procedure.

1.1 Adjusted total volume'' means the product of, (1) the freezer volume as defined in HRF–1–1979 in cubic feet, times (2) an adjustment factor.

1.2 ''Anti-sweat heater'' means a device incorporated into the design of a freezer to prevent the accumulation of moisture on exterior or interior surfaces of the cabinet.

1.3 ''Anti-sweat heater switch'' means a user-controllable switch or user interface which modifies the activation or control of anti-sweat heaters.

1.4 ''Automatic Defrost'' means a system in which the defrost cycle is automatically initiated and terminated, with resumption of normal refrigeration at the conclusion of defrost operation. The system automatically prevents the permanent formation of frost on all refrigerated surfaces. Nominal refrigerated food temperatures are maintained during the operation of the automatic defrost system.

1.5 ''Cycle'' means the period of 24 hours for which the energy use of a freezer is calculated as though the consumer-activated compartment temperature controls were set to maintain the standardized temperature (see section 3.2).

1.6 ''Cycle type'' means the set of test conditions having the calculated effect of operating a freezer for a period of 24 hours with the consumer-activated controls other than the compartment temperature control set to establish various operating characteristics.

1.7 ''HRF–1–1979'' means the Association of Home Appliance Manufacturers standard for household refrigerators, combination refrigerator-freezers, and household freezers, also approved as an American National Standard as a revision of ANSI B 38.1–1970. Only sections of HRF–1–1979 (incorporated by reference; see §430.3) specifically referenced in this test procedure are part of this test procedure. In cases where there is a conflict, the language of the test procedure in this appendix takes precedence over HRF–1–1979.

1.8 ''Long-time Automatic Defrost'' means an automatic defrost system where successive defrost cycles are separated by 14 hours or more of compressor-operating time.

1.9 ''Quick freeze'' means an optional feature on freezers that is initiated manually. It bypasses the thermostat control and operates continually until the feature is terminated either manually or automatically.

1.10 ''Separate auxiliary compartment'' means a freezer compartment other than the first freezer compartment of a freezer having more than one compartment. Access to a separate auxiliary compartment is through a separate exterior door or doors rather than through the door or doors of another compartment. Separate auxiliary freezer compartments may not be larger than the first freezer compartment.

1.11 ''Special compartment'' means any compartment without doors directly accessible from the exterior, and with separate temperature control that is not convertible from fresh food temperature range to freezer temperature range.

1.12 ''Stabilization Period'' means the total period of time during which steady-state conditions are being attained or evaluated.

1.13 ''Standard cycle'' means the cycle type in which the anti-sweat heater switch, when provided, is set in the highest energy consuming position.

1.14 ''Variable defrost control'' means an automatic defrost system in which successive defrost cycles are determined by an operating condition variable or variables other than solely compressor operating time. This includes any electrical or mechanical device performing this function. A control scheme that changes the defrost interval from a fixed length to an extended length (without any intermediate steps) is not considered a variable defrost control. A variable defrost control feature should predict the accumulation of frost on the evaporator and react accordingly. Therefore, the times between defrost should vary with different usage patterns and include a continuum of lengths of time between defrosts as inputs vary.

2. Test Conditions.

2.1 Ambient Temperature. The ambient temperature shall be 90.0 ±1.0 °F (32.2 ±0.6 °C) during the stabilization period and the test period.

2.2 Operational Conditions. The freezer shall be installed and its operating conditions maintained in accordance with HRF–1–1979, (incorporated by reference; see §430.3), section 7.2 through section 7.4.3.3 (but excluding section 7.4.3.2), except that the vertical ambient gradient at locations 10 inches (25.4 cm) out from the centers of the two sides of the unit being tested is to be maintained during the test. Unless the area is obstructed by shields or baffles, the gradient is to be maintained from 2 inches (5.1 cm) above the floor or supporting platform to a height 1 foot (30.5 cm) above the unit under test. Defrost controls are to be operative. The quick freeze option shall be switched off except as specified in section 3.1. Additional clarifications are noted in sections 2.3 through 2.6.

2.3 Anti-Sweat Heaters. The anti-sweat heater switch is to be on during one test and off during a second test. In the case of an electric freezer equipped with variable anti-sweat heater control, the standard cycle energy use shall be the result of the calculation described in 6.2.2.

2.4 The cabinet and its refrigerating mechanism shall be assembled and set up in accordance with the printed consumer instructions supplied with the cabinet. Set-up of the freezer shall not deviate from these instructions, unless explicitly required or allowed by this test procedure. Specific required or allowed deviations from such set-up include the following:

(a) Connection of water lines and installation of water filters are not required;

(b) Clearance requirements from surfaces of the product shall be as specified in section 2.6 below;

(c) The electric power supply shall be as described in HRF–1–1979 (incorporated by reference; see § 430.3) section 7.4.1;

(d) Temperature control settings for testing shall be as described in section 3 of this appendix. Settings for special compartments shall be as described in section 2.5 of this appendix;

(e) The product does not need to be anchored or otherwise secured to prevent tipping during energy testing; and

(f) All the product's chutes and throats required for the delivery of ice shall be free of packing, covers, or other blockages that may be fitted for shipping or when the icemaker is not in use.

For cases in which set-up is not clearly defined by this test procedure, manufacturers must submit a petition for a waiver (see section 7).

2.5 Special compartments shall be tested with controls set to provide the coldest temperature. This requirement for the coldest temperature does not apply to features or functions (such as quick freeze) that are initiated manually and terminated automatically within 168 hours.

2.6 The space between the back of the cabinet and a vertical surface (the test room wall or simulated wall) shall be the minimum distance in accordance with the manufacturer's instructions.

2.7 Steady State Condition. Steady state conditions exist if the temperature measurements taken at four minute intervals or less during a stabilization period are not changing at a rate greater than 0.042 °F. (0.023 °C.) per hour as determined by the applicable condition of A or B.

A—The average of the measurements during a two hour period if no cycling occurs or during a number of complete repetitive compressor cycles through a period of no less than two hours is compared to the average over an equivalent time period with three hours elapsed between the two measurement periods.

B—If A above cannot be used, the average of the measurements during a number of complete repetitive compressor cycles through a period of no less than two hours and including the last complete cycle prior to a defrost period, or if no cycling occurs, the average of the measurements during the last two hours prior to a defrost period; are compared to the same averaging period prior to the following defrost period.

3. Test Control Settings.

3.1 Model with No User Operable Temperature Control. A test shall be performed during which the compartment temperature and energy use shall be measured. A second test shall be performed with the temperature control electrically short circuited to cause the compressor to run continuously. If the model has the quick freeze option, this option must be used to bypass the temperature control.

3.2 Model with User Operable Temperature Control. Testing shall be performed in accordance with one of the following sections using the standardized temperature of 0.0 °F (−17.8 °C).

For the purposes of comparing compartment temperatures with standardized temperatures, as described in sections 3.2.1 through 3.2.3, the freezer compartment temperature shall be as specified in section 5.1.3.

3.2.1 A first test shall be performed with all temperature controls set at their median position midway between their warmest and coldest settings. For mechanical control systems, knob detents shall be mechanically defeated if necessary to attain a median setting. For electronic control systems, the test shall be performed with all compartment temperature controls set at the average of the coldest and warmest settings—if there is no setting equal to this average, the setting closest to the average shall be used. If there are two such settings equally close to the average, the higher of these temperature control settings shall be used. If the compartment temperature measured during the first test is higher than the standardized temperature, the second test shall be conducted with the controls set at the coldest settings. If the compartment temperature measured during the first test is lower than the standardized temperature, the second test shall be conducted with the controls set at the warmest settings. If the compartment temperatures measured during these two tests bound the standardized temperature, then these test results shall be used to determine energy consumption. If the compartment temperature measured with all controls set at their coldest settings is above the standardized temperature, a third test shall be performed with all controls set at their warmest settings and the result of this test shall be used with the result of the test performed with all controls set at their coldest settings to determine energy consumption. If the compartment temperature measured with all controls set at their warmest settings is below the standardized temperature, then the result of this test alone will be used to determine energy consumption.

3.2.2 Alternatively, a first test may be performed with all temperature controls set at their warmest setting. If the compartment temperature is below the standardized temperature, then the result of this test alone will be used to determine energy consumption. If the above condition is not met, then the unit shall be tested in accordance with 3.2.1 above.

3.2.3 Alternatively, a first test may be performed with all temperature controls set at their coldest setting. If the compartment temperature is above the standardized temperature, a second test shall be performed with all controls set at their warmest setting and the results of these two tests shall be used to determine energy consumption. If the above condition is not met, then the unit shall be tested in accordance with 3.2.1 above.

4. Test Period

Tests shall be performed by establishing the conditions set forth in section 2 and using the control settings as set forth in section 3 of this appendix.

4.1 Nonautomatic Defrost. If the model being tested has no automatic defrost system, the test time period shall start after steady-state conditions have been achieved and be no less than 3 hours in duration. During the test period, the compressor motor shall complete two or more whole compressor cycles. A compressor cycle is a complete ''on'' and a complete ''off'' period of the motor. If no ''off'' cycling will occur, as determined during the stabilization period, the test period shall be 3 hours. If incomplete cycling occurs (less than two compressor cycles during a 24-hour period), the results of the 24-hour period shall be used.

4.2 Automatic Defrost. If the model being tested has an automatic defrost system, the test time period shall start after steady-state conditions have been achieved and be from one point during a defrost period to the same point during the next defrost period. If the model being tested has a long-time automatic defrost system, the alternate provisions of 4.2.1 may be used. If the model being tested has a variable defrost control, the provisions of 4.2.2 shall apply.

4.2.1 Long-time Automatic Defrost. If the model being tested has a long-time automatic defrost system, the two-part test described in this section may be used. The first part is the same as the test for a unit having no defrost provisions (section 4.1). The second part would start when a defrost is initiated when the compressor ''on'' cycle is terminated prior to start of the defrost heater and terminates at the second turn ''on'' of the compressor or 4 hours from the initiation of the defrost heater, whichever comes first.

4.2.2 Variable Defrost Control. If the model being tested has a variable defrost control system, the test shall consist of the same two parts as the test for long-time automatic defrost (section 4.2.1).

5. Test Measurements

5.1 Temperature Measurements. Temperature measurements shall be made at the locations prescribed in Figure 7.2 of HRF–1–1979 (incorporated by reference; see §430.3) and shall be accurate to within ±0.5 °F (0.3 °C). If the interior arrangements of the cabinet do not conform with those shown in Figure 7.2 of HRF–1–1979, the product may be tested by relocating the temperature sensors from the locations specified in the figures to avoid interference with hardware or components within the cabinet, in which case the specific locations used for the temperature sensors shall be noted in the test data records maintained by the manufacturer in accordance with 10 CFR 429.14, and the certification report shall indicate that nonstandard sensor locations were used.

5.1.1 Measured Temperature. The measured temperature is to be the average of all sensor temperature readings taken at a particular time. Measurements shall be taken at regular intervals not to exceed four minutes.

5.1.2 Compartment Temperature. The compartment temperature for each test period shall be an average of the measured temperatures taken during one or more complete compressor cycles. One compressor cycle is one complete motor ''on'' and one complete motor ''off'' period. For long-time automatic defrost models, compartment temperature shall be that measured in the first part of the test period specified in 4.2.1. For models equipped with variable defrost controls, compartment temperatures shall be those measured in the first part of the test period specified in 4.2.2.

5.1.2.1 The number of complete compressor motor cycles over which the measured temperatures in a compartment are to be averaged to determine compartment temperature shall be equal to the number of minutes between measured temperature readings rounded up to the next whole minute or a number of complete cycles over a time period exceeding one hour. One of the compressor cycles shall be the last complete compressor cycle during the test period before start of the defrost control sequence for products with automatic defrost.

5.1.2.2 If no compressor motor cycling occurs, the compartment temperature shall be the average of the measured temperatures taken during the last thirty-two minutes of the test period.

5.1.2.3 If incomplete cycling occurs (less than one compressor cycle), the compartment temperature shall be the average of all readings taken during the last 3 hours of the last complete compressor ''on'' period.

5.1.3 Freezer Compartment Temperature. The freezer compartment temperature shall be calculated as:

$$TF = \frac{\sum_{i=1}^{F}(TF_i) \times (VF_i)}{\sum_{i=1}^{F}(VF_i)}$$

Where:

F is the total number of applicable freezer compartments, which include the first freezer compartment and any number of separate auxiliary freezer compartments;

TF_i is the compartment temperature of freezer compartment ''i'' determined in accordance with section 5.1.2; and

VF_i is the volume of freezer compartment ''i''.

5.2 Energy Measurements:

5.2.1 Per-day Energy Consumption. The energy consumption in kilowatt-hours per day for each test period shall be the energy expended during the test period as specified in section 4.1 adjusted to a 24 hour period.

The adjustment shall be determined as follows:

5.2.1.1 Nonautomatic and automatic defrost models. The energy consumption in kilowatt-hours per day shall be calculated equivalent to:

$ET = (EP \times 1440 \times K) / T$ where

ET = test cycle energy expended in kilowatt-hours per day,

EP = energy expended in kilowatt-hours during the test period.

T = length of time of the test period in minutes,

1440 = conversion factor to adjust to a 24 hour period in minutes per day, and

K = correction factor of 0.7 for chest freezers and 0.85 for upright freezers to adjust for average household usage, dimensionless.

5.2.1.2 Long-time Automatic Defrost. If the two part test method is used, the energy consumption in kilowatt-hours per day shall be calculated equivalent to:

$ET = (1440 \times K \times EP1/T1) + (EP2 - EP1 \times T2/T1)) \times K \times (12/CT)$

Where:

ET, 1440, and K are defined in section 5.2.1.1;

EP1 = energy expended in kilowatt-hours during the first part of the test;

EP2 = energy expended in kilowatt-hours during the second part of the test;

CT = defrost timer run time or compressor run time between defrosts in hours required to cause it to go through a complete cycle, rounded to the nearest tenth of an hour;

12 = conversion factor to adjust for a 50 percent run time of the compressor in hours per day; and

T1 and T2 = length of time in minutes of the first and second test parts respectively.

5.2.1.3 Variable Defrost Control. The energy consumption in kilowatt-hours per day shall be calculated equivalent to:

$ET = (1440 \times K \times EP1/T1) + (EP2 - (EP1 \times T2/T1)) \times K \times (12/CT)$,

Where:

ET, K, and 1440 are defined in section 5.2.1.1 and EP1, EP2, T1, T2, and 12 are defined in section 5.2.1.2.

$CT = (CT_L \times CT_M)/(F \times (CT_M - CT_L) + CT_L)$

Where:

CT_L = least or shortest compressor run time between defrosts in hours rounded to the nearest tenth of an hour (greater than or equal to 6 hours but less than or equal to 12 hours);

CT_M = maximum compressor run time between defrosts in hours rounded to the nearest tenth of an hour (greater than CT_L but not more than 96 hours);

F = ratio of per day energy consumption in excess of the least energy and the maximum difference in per-day energy consumption and is equal to 0.20.

For variable defrost models with no values for CT_L and CT_M in the algorithm, the default values of 12 and 84 shall be used, respectively.

5.3 Volume measurements. The total refrigerated volume, VT, shall be measured in accordance with HRF–1–1979, section 3.20 and section 5.1 through 5.3.

6. Calculation of Derived Results From Test Measurements.

6.1 Adjusted Total Volume. The adjusted total volume, VA, for freezers under test shall be defined as:

$VA = VT \times CF$

where

VA=adjusted total volume in cubic feet,

VT=total refrigerated volume in cubic feet, and

CF=Correction factor of 1.73, dimensionless.

6.2 Average Per Cycle Energy Consumption:

6.2.1 The average per-cycle energy consumption for a cycle type is expressed in kilowatt-hours per cycle to the nearest one

hundredth (0.01) kilowatt-hour and shall depend upon the compartment temperature attainable as shown below.

6.2.1.1 If the compartment temperature is always below 0.0 °F. (−17.8 °C.), the average per-cycle energy consumption shall be equivalent to:

E=ET1

where

E=Total per-cycle energy consumption in kilowatt-hours per day.

ET is defined in 5.2.1, and

Number 1 indicates the test period during which the highest compartment temperature is measured.

6.2.1.2 If one of the compartment temperatures measured for a test period is greater than 0.0 °F (17.8 °C), the average per-cycle energy consumption shall be equivalent to:

E = ET1 + ((ET2 − ET1) × (0.0 − TF1)/(TF2 − TF1))

Where:

E is defined in 6.2.1.1;

ET is defined in 5.2.1;

TF = freezer compartment temperature determined according to 5.1.3 in degrees F;

The numbers 1 and 2 indicate measurements taken during the first and second test period as appropriate; and

0.0 = Standardized compartment temperature in degrees F.

6.2.2 Variable Anti-Sweat Heater Models. The standard cycle energy consumption of an electric freezer with a variable anti-sweat heater control (E_{std}), expressed in kilowatt-hours per day, shall be calculated equivalent to:

E_{std} = E + (Correction Factor) where E is determined by 6.2.1.1, or 6.2.1.2, whichever is appropriate, with the anti-sweat heater switch in the ''off'' position or, for a product without an anti-sweat heater switch, the anti-sweat heater in its lowest energy use state.

Correction Factor = (Anti-sweat Heater Power × System-loss Factor) × (24 hrs/1 day) × (1 kW/1000 W)

Where:

Anti-sweat Heater Power = 0.034 * (Heater Watts at 5%RH)
+ 0.211 * (Heater Watts at 15%RH)
+ 0.204 * (Heater Watts at 25%RH)
+ 0.166 * (Heater Watts at 35%RH)
+ 0.126 * (Heater Watts at 45%RH)
+ 0.119 * (Heater Watts at 55%RH)
+ 0.069 * (Heater Watts at 65%RH)
+ 0.047 * (Heater Watts at 75%RH)
+ 0.008 * (Heater Watts at 85%RH)
+ 0.015 * (Heater Watts at 95%RH)

Heater Watts at a specific relative humidity = the nominal watts used by all heaters at that specific relative humidity, 72 °F (22.2 °C) ambient, and DOE reference freezer (FZ) average temperature of 0 °F (−17.8 °C).

System-loss Factor = 1.3.

7. Test Procedure Waivers

To the extent that the procedures contained in this appendix do not provide a means for determining the energy consumption of a freezer, a manufacturer must obtain a waiver under 10 CFR 430.27 to establish an acceptable test procedure for each such product. Such instances could, for example, include situations where the test set-up for a particular freezer basic model is not clearly defined by the provisions of section 2. For details regarding the criteria and procedures for obtaining a waiver, please refer to 10 CFR 430.27.

[47 FR 34528, Aug. 10, 1982; 48 FR 13013, Mar. 29, 1983, as amended at 54 FR 36241, Aug. 31, 1989; 54 FR 38788, Sept. 20, 1989; 75 FR 78871, Dec. 16, 2010; 76 FR 12502, Mar. 7, 2011; 76 FR 24782, May 2, 2011]

APPENDIX C TO SUBPART B OF PART 430—UNIFORM TEST METHOD FOR MEASURING THE ENERGY CONSUMPTION OF DISHWASHERS

NOTE: Prior to the compliance date for any amended energy conservation standards that incorporate standby mode and off mode energy consumption (May 30, 2013 unless the direct final rule published on May 30, 2012 is withdrawn), manufacturers may use either Appendix C or Appendix C1 to certify compliance with existing DOE energy conservation standards and to make any representations related to energy and/or water consumption of dishwashers, with the following exception. If the compliance date is after April 29, 2013, manufacturers that make representations related to standby mode and off mode energy consumption must use Appendix C1 for any representations made after April 29, 2013 of the energy and/or water consumption of these products, consistent with the requirements of 42 U.S.C. 6293(c)(2).

After the compliance date for any amended energy conservation standards that incorporate standby mode and off mode energy consumption (May 30, 2013 unless the direct final rule published on May 30, 2012 is withdrawn), all dishwashers shall be tested using the provisions of Appendix C1 to certify compliance with amended energy conservation standards and to make any representations related to energy and/or water consumption, with the following exception. If the compliance date is before April 29, 2013, manufacturers may use Appendix C for any representations until April 29, 2013 of energy and/or water consumption of these products, consistent with the requirements of 42 U.S.C. 6293(c)(2).

1. Definitions

1.1 *AHAM* means the Association of Home Appliance Manufacturers.

1.2 *Compact dishwasher* means a dishwasher that has a capacity of less than eight place settings plus six serving pieces as specified in ANSI/AHAM DW–1–1992 (incorporated by reference; see §430.3), using the test load specified in section 2.7.1 of this appendix.

1.3 *Cycle* means a sequence of operations of a dishwasher which performs a complete dishwashing function, and may include variations or combinations of washing, rinsing, and drying.

1.4 *Cycle type* means any complete sequence of operations capable of being preset on the dishwasher prior to the initiation of machine operation.

1.5 *Non-soil-sensing dishwasher* means a dishwasher that does not have the ability to adjust automatically any energy consuming aspect of a wash cycle based on the soil load of the dishes.

1.6 *Normal cycle* means the cycle type recommended by the manufacturer for completely washing a full load of normally soiled dishes including the power-dry feature.

1.7 *Power-dry feature* means the introduction of electrically generated heat into the washing chamber for the purpose of improving the drying performance of the dishwasher.

1.8 *Preconditioning cycle* means any cycle that includes a fill, circulation, and drain to ensure that the water lines and sump area of the pump are primed.

1.9 *Sensor heavy response* means, for standard dishwashers, the set of operations in a soil-sensing dishwasher for completely washing a load of dishes, four place settings of which are soiled according to ANSI/AHAM DW–1–1992 (incorporated by reference; see §430.3) and as additionally specified in section 2.7.2 of this appendix. For compact dishwashers, this definition is the same, except that two soiled place settings are used instead of four.

1.10 *Sensor light response* means, for both standard and compact dishwashers, the set of operations in a soil-sensing dishwasher for completely washing a load of dishes, one place setting of which is soiled with half of the gram weight of soils for each item specified in a single place setting according to ANSI/AHAM DW–1–1992 (incorporated by reference; see §430.3) and as additionally specified in section 2.7.2 of this appendix.

1.11 *Sensor medium response* means, for standard dishwashers, the set of operations in a soil-sensing dishwasher for completely washing a load of dishes, two place settings of which are soiled according to ANSI/AHAM DW–1–1992 (incorporated by reference; see §430.3) and as additionally specified in section 2.7.2 of this appendix. For compact dishwashers, this definition is the same, except that one soiled place setting is used.

1.12 *Soil-sensing dishwasher* means a dishwasher that has the ability to adjust any energy consuming aspect of a wash cycle based on the soil load of the dishes.

1.13 *Standard dishwasher* means a dishwasher that has a capacity equal to or greater than eight place settings plus six serving pieces as specified in ANSI/AHAM DW–1–1992 (incorporated by reference; see §430.3), using the test load specified in section 2.7.1 of this appendix.

1.14 *Standby mode* means the lowest power consumption mode which cannot be switched off or influenced by the user and that may persist for an indefinite time when the dishwasher is connected to the main electricity supply and used in accordance with the manufacturer's instructions.

1.15 *Truncated normal cycle* means the normal cycle interrupted to eliminate the power-dry feature after the termination of the last rinse operation.

1.16 *Truncated sensor heavy response* means the sensor heavy response interrupted to eliminate the power-dry feature after the termination of the last rinse operation.

1.17 *Truncated sensor light response* means the sensor light response interrupted to eliminate the power-dry feature after the termination of the last rinse operation.

1.18 *Truncated sensor medium response* means the sensor medium response interrupted to eliminate the power-dry feature after the termination of the last rinse operation.

1.19 *Water-heating dishwasher* means a dishwasher which, as recommended by the manufacturer, is designed for heating cold inlet water (nominal 50 °F) or designed for heating water with a nominal inlet temperature of 120 °F. Any dishwasher designated as water-heating (50 °F or 120 °F inlet water) must provide internal water heating to above 120 °F in at least one wash phase of the normal cycle.

2. Testing conditions:

2.1 *Installation Requirements.* Install the dishwasher according to the manufacturer's instructions. A standard or compact under-counter or under-sink dishwasher must be tested in a rectangular enclosure constructed of nominal 0.374 inch (9.5 mm) plywood painted black. The enclosure must consist of a top, a bottom, a back, and two sides. If the dishwasher includes a counter top as part of the appliance, omit the top of the enclosure. Bring the enclosure into the closest contact with the appliance that the configuration of the dishwasher will allow.

2.2 *Electrical energy supply.*

2.2.1 *Dishwashers that operate with an electrical supply of 115 volts.* Maintain the electrical supply to the dishwasher at 115 volts

±2 percent and within 1 percent of the nameplate frequency as specified by the manufacturer.

2.2.2 *Dishwashers that operate with an electrical supply of 240 volts.* Maintain the electrical supply to the dishwasher at 240 volts ±2 percent and within 1 percent of its nameplate frequency as specified by the manufacturer.

2.3 *Water temperature.* Measure the temperature of the water supplied to the dishwasher using a temperature measuring device as specified in section 3.1 of this appendix.

2.3.1 *Dishwashers to be tested at a nominal 140 °F inlet water temperature.* Maintain the water supply temperature at 140° ±2 °F.

2.3.2 *Dishwashers to be tested at a nominal 120 °F inlet water temperature.* Maintain the water supply temperature at 120° ±2 °F.

2.3.3 *Dishwashers to be tested at a nominal 50 °F inlet water temperature.* Maintain the water supply temperature at 50° ±2 °F.

2.4 *Water pressure.* Using a water pressure gauge as specified in section 3.4 of this appendix, maintain the pressure of the water supply at 35 ±2.5 pounds per square inch gauge (psig) when the water is flowing.

2.5 *Ambient and machine temperature.* Using a temperature measuring device as specified in section 3.1 of this appendix, maintain the room ambient air temperature at 75° ±5 °F, and ensure that the dishwasher and the test load are at room ambient temperature at the start of each test cycle.

2.6 *Test Cycle and Load.*

2.6.1 *Non-soil-sensing dishwashers to be tested at a nominal inlet temperature of 140 °F.* These units must be tested on the normal cycle and truncated normal cycle without a test load if the dishwasher does not heat water in the normal cycle.

2.6.2 *Non-soil-sensing dishwashers to be tested at a nominal inlet temperature of 50 °F or 120 °F.* These units must be tested on the normal cycle with a clean load of eight place settings plus six serving pieces, as specified in section 2.7.1 of this appendix. If the capacity of the dishwasher, as stated by the manufacturer, is less than eight place settings, then the test load must be the stated capacity.

2.6.3 *Soil-sensing dishwashers to be tested at a nominal inlet temperature of 50 °F, 120 °F, or 140 °F.* These units must be tested first for the sensor heavy response, then tested for the sensor medium response, and finally for the sensor light response with the following combinations of soiled and clean test loads.

2.6.3.1 For tests of the sensor heavy response, as defined in section 1.9 of this appendix:

(A) For standard dishwashers, the test unit is to be loaded with a total of eight place settings plus six serving pieces as specified in section 2.7.1 of this appendix. Four of the eight place settings must be soiled according to ANSI/AHAM DW–1–1992 (incorporated by reference, see §430.3) and as additionally specified in section 2.7.2 of this appendix, while the remaining place settings, serving pieces, and all flatware are not soiled.

(B) For compact dishwashers, the test unit is to be loaded with four place settings plus six serving pieces as specified in section 2.7.1 of this appendix. Two of the four place settings must be soiled according to ANSI/AHAM DW–1–1992 and as additionally specified in section 2.7.2 of this appendix, while the remaining place settings, serving pieces, and all flatware are not soiled.

2.6.3.2 For tests of the sensor medium response, as defined in section 1.11 of this appendix:

(A) For standard dishwashers, the test unit is to be loaded with a total of eight place settings plus six serving pieces as specified in section 2.7.1 of this appendix. Two of the eight place settings must be soiled according to ANSI/AHAM DW–1–1992 (incorporated by reference, see §430.3) and as additionally specified in section 2.7.2 of this appendix, while the remaining place settings, serving pieces, and all flatware are not soiled.

(B) For compact dishwashers, the test unit is to be loaded with four place settings plus six serving pieces as specified in section 2.7.1 of this appendix. One of the four place settings must be soiled according to ANSI/AHAM DW–1–1992 and as additionally specified in section 2.7.2 of this appendix, while the remaining place settings, serving pieces, and all flatware are not soiled.

2.6.3.3 For tests of the sensor light response, as defined in section 1.10 of this appendix:

(A) For standard dishwashers, the test unit is to be loaded with a total of eight place settings plus six serving pieces as specified in section 2.7.1 of this appendix. One of the eight place settings must be soiled with half of the soil load specified for a single place setting according to ANSI/AHAM DW–1–1992 (incorporated by reference, see §430.3) and as additionally specified in section 2.7.2 of this appendix, while the remaining place settings, serving pieces, and all flatware are not soiled.

(B) For compact dishwashers, the test unit is to be loaded with four place settings plus six serving pieces as specified in section 2.7.1 of this appendix. One of the four place settings must be soiled with half of the soil load specified for a single place setting according to ANSI/AHAM DW–1–1992 and as additionally specified in section 2.7.2 of this appendix, while the remaining place settings, serving pieces, and all flatware are not soiled.

2.7 *Test load.*

2.7.1 *Test load items.*

Dishware/glassware/flatware item	Primary source	Description	Primary No.	Alternate source	Alternate source No.
Dinner Plate	Corning Comcor®/Corelle®.	10 inch Dinner Plate	6003893	.	
Bread and Butter Plate	Corning Comcor®/Corelle®.	6.75 inch Bread & Butter	6003887	Arzberg	8500217100 or 2000–00001–0217–1
Fruit Bowl	Corning Comcor®/Corelle®.	10 oz. Dessert Bowl	6003899	Arzberg	3820513100
Cup	Corning Comcor®/Corelle®.	8 oz. Ceramic Cup	6014162	Arzberg	1382–00001–4732
Saucer	Corning Comcor®/Corelle®.	6 inch Saucer	6010972	Arzberg	1382–00001–4731
Serving Bowl	Corning Comcor®/Corelle®.	1 qt. Serving Bowl	6003911	.	
Platter	Corning Comcor®/Corelle®.	9.5 inch Oval Platter	6011655	.	
Glass—Iced Tea	Libbey		551 HT	.	
Flatware—Knife	Oneida®—Accent		2619KPVF	WMF—Gastro 0800.	12.0803.6047
Flatware—Dinner Fork	Oneida®—Accent		2619FRSF	WMF—Signum 1900.	12.1905.6040
Flatware—Salad Fork	Oneida®—Accent		2619FSLF	WMF—Signum 1900.	12.1964.6040
Flatware—Teaspoon	Oneida®—Accent		2619STSF	WMF—Signum 1900.	12.1910.6040
Flatware—Serving Fork	Oneida®—Flight		2865FCM	WMF—Signum 1900.	12.1902.6040
Flatware—Serving Spoon.	Oneida®—Accent		2619STBF	WMF—Signum 1900.	12.1904.6040

2.7.2 *Soils*. The soils shall be as specified in ANSI/AHAM DW–1–1992 (incorporated by reference, *see* §430.3), except for the following substitutions.

2.7.2.1 *Margarine*. The margarine shall be Fleischmann's Original stick margarine.

2.7.2.2 *Coffee*. The coffee shall be Folgers Classic Decaf.

2.8 *Detergent*. Use half the quantity of detergent specified according to ANSI/AHAM DW–1–1992 (incorporated by reference, *see* §430.3), using Cascade with the Grease Fighting Power of Dawn powder as the detergent formulation.

2.9 *Testing requirements*. Provisions in this appendix pertaining to dishwashers that operate with a nominal inlet temperature of 50 °F or 120 °F apply only to water-heating dishwashers as defined in section 1.19 of this appendix.

2.10 *Preconditioning requirements*. Precondition the dishwasher by establishing the testing conditions set forth in sections 2.1 through 2.5 of this appendix. Set the dishwasher to the preconditioning cycle as defined in section 1.8 of this appendix, without using a test load, and initiate the cycle.

3. Instrumentation

Test instruments must be calibrated annually.

3.1 *Temperature measuring device*. The device must have an error no greater than ±1 °F over the range being measured.

3.2 *Timer*. Time measurements for each monitoring period shall be accurate to within 2 seconds.

3.3 *Water meter*. The water meter must have a resolution of no larger than 0.1 gallons and a maximum error no greater than ±1.5 percent of the measured flow rate for all water temperatures encountered in the test cycle.

3.4 *Water pressure gauge*. The water pressure gauge must have a resolution of one pound per square inch (psi) and must have an error no greater than 5 percent of any measured value over the range of 35 ±2.5 psig.

3.5 *Watt-hour meter*. The watt-hour meter must have a resolution of 1 watt-hour or less and a maximum error of no more than 1 percent of the measured value for any demand greater than 50 watts.

3.6 *Standby wattmeter*. The standby wattmeter must have a resolution of 0.1 watt or less, a maximum error of no more than 1 percent of the measured value, and must be capable of operating within the stated tolerances for input voltages up to 5 percent total harmonic distortion. The standby wattmeter must be capable of operating at frequencies from 47 hertz through 63 hertz. Power measurements must have a crest factor of 3 or more at currents of 2 amps RMS or less.

3.7 *Standby watt-hour meter*. The standby watt-hour meter must meet all the requirements of the standby wattmeter and must accumulate watt-hours at a minimum power level of 20 milliwatts.

4. Test Cycle and Measurements

4.1 *Test cycle.* Perform a test cycle by establishing the testing conditions set forth in section 2 of this appendix, setting the dishwasher to the cycle type to be tested, initiating the cycle, and allowing the cycle to proceed to completion.

4.2 *Machine electrical energy consumption.* Measure the machine electrical energy consumption, M, expressed as the number of kilowatt-hours of electricity consumed by the machine during the entire test cycle, using a water supply temperature as set forth in section 2.3 of this appendix and using a watt-hour meter as specified in section 3.5 of this appendix.

4.3 *Water consumption.* Measure the water consumption, V, expressed as the number of gallons of water delivered to the machine during the entire test cycle, using a water meter as specified in section 3.3 of this appendix.

4.4 *Standby power.* Connect the dishwasher to a standby wattmeter or a standby watt-hour meter as specified in sections 3.6 and 3.7, respectively, of this appendix. Select the conditions necessary to achieve operation in the standby mode as defined in section 1.14 of this appendix. Monitor the power consumption but allow the dishwasher to stabilize for at least 5 minutes. Then monitor the power consumption for at least an additional 5 minutes. If the power level does not change by more than 5 percent from the maximum observed value during the later 5 minutes and there is no cyclic or pulsing behavior of the load, the load can be considered stable. For stable operation, standby power, S_m, can be recorded directly from the standby watt meter in watts or accumulated using the standby watt-hour meter over a period of at least 5 minutes. For unstable operation, the energy must be accumulated using the standby watt-hour meter over a period of at least 5 minutes and must capture the energy use over one or more complete cycles. Calculate the average standby power, S_m, expressed in watts by dividing the accumulated energy consumption by the duration of the measurement period.

5. Calculation of Derived Results From Test Measurements

5.1 *Machine energy consumption.*

5.1.1 *Machine energy consumption for non-soil-sensing electric dishwashers.* Take the value recorded in section 4.2 of this appendix as the per-cycle machine electrical energy consumption. Express the value, M, in kilowatt-hours per cycle.

5.1.2 *Machine energy consumption for soil-sensing electric dishwashers.* The machine energy consumption for the sensor normal cycle, M, is defined as:

$$M = (M_{hr} \times F_{hr}) + (M_{mr} \times F_{mr}) + (M_{lr} \times F_{lr})$$

where,

M_{hr} = the value recorded in section 4.2 of this appendix for the test of the sensor heavy response, expressed in kilowatt-hours per cycle,

M_{mr} = the value recorded in section 4.2 of this appendix for the test of the sensor medium response, expressed in kilowatt-hours per cycle,

M_{lr} = the value recorded in section 4.2 of this appendix for the test of the sensor light response, expressed in kilowatt-hours per cycle,

F_{hr} = the weighting factor based on consumer use of heavy response = 0.05,

F_{mr} = the weighting factor based on consumer use of medium response = 0.33,

F_{lr} = the weighting factor based on consumer use of light response = 0.62.

5.2 Drying energy.

5.2.1 *Drying energy consumption for non-soil-sensing electric dishwashers.* Calculate the amount of energy consumed using the power-dry feature after the termination of the last rinse option of the normal cycle. Express the value, E_D, in kilowatt-hours per cycle.

5.2.2 *Drying energy consumption for soil-sensing electric dishwashers.* The drying energy consumption, E_D, for the sensor normal cycle is defined as:

$$E_D = (E_{Dhr} + E_{Dmr} + E_{Dlr})/3$$

Where,

E_{Dhr} = energy consumed using the power-dry feature after the termination of the last rinse option of the sensor heavy response, expressed in kilowatt-hours per cycle,

E_{Dmr} = energy consumed using the power-dry feature after the termination of the last rinse option of the sensor medium response, expressed in kilowatt-hours per cycle,

E_{Dlr} = energy consumed using the power-dry feature after the termination of the last rinse option of the sensor light response, expressed in kilowatt-hours per cycle.

5.3 *Water consumption.*

5.3.1 *Water consumption for non-soil-sensing dishwashers using electrically heated, gas-heated, or oil-heated water.*

Take the value recorded in section 4.3 of this appendix as the per-cycle water energy consumption. Express the value, V, in gallons per cycle.

5.3.2 *Water consumption for soil-sensing dishwashers using electrically heated, gas-heated, or oil-heated water.*

The water consumption for the sensor normal cycle, V, is defined as:

$$V = (V_{hr} \times F_{hr}) + (V_{mr} \times F_{mr}) + (V_{lr} \times F_{lr})$$

Where,

V_{hr} = the value recorded in section 4.3 of this appendix for the test of the sensor heavy response, expressed in gallons per cycle,

V_{mr} = the value recorded in section 4.3 of this appendix for the test of the sensor medium response, expressed in gallons per cycle,

V_{lr} = the value recorded in section 4.3 of this appendix for the test of the sensor light response, expressed in gallons per cycle,

F_{hr} = the weighting factor based on consumer use of heavy response = 0.05,

F_{mr} = the weighting factor based on consumer use of medium response = 0.33,

F_{lr} = the weighting factor based on consumer use of light response = 0.62.

5.4 *Water energy consumption for non-soil-sensing or soil-sensing dishwashers using electrically heated water.*

5.4.1 *Dishwashers that operate with a nominal 140 °F inlet water temperature, only.* Calculate the water energy consumption, W, expressed in kilowatt-hours per cycle and defined as:

$W = V \times T \times K$

where,

V = water consumption in gallons per cycle, as determined in section 5.3.1 of this appendix for non-soil-sensing dishwashers and section 5.3.2 of this appendix for soil-sensing dishwashers,

T = nominal water heater temperature rise = 90 °F, and

K = specific heat of water in kilowatt-hours per gallon per degree Fahrenheit = 0.0024.

5.4.2 *Dishwashers that operate with a nominal inlet water temperature of 120 °F.* Calculate the water energy consumption, W, expressed in kilowatt-hours per cycle and defined as:

$W = V \times T \times K$

where,

V = water consumption in gallons per cycle, as determined in section 5.3.1 of this appendix for non-soil-sensing dishwashers and section 5.3.2 of this appendix for soil-sensing dishwashers,

T = nominal water heater temperature rise = 70 °F, and

K = specific heat of water in kilowatt-hours per gallon per degree Fahrenheit = 0.0024,

5.5 *Water energy consumption per cycle using gas-heated or oil-heated water.*

5.5.1 *Dishwashers that operate with a nominal 140 °F inlet water temperature, only.* Calculate the water energy consumption using gas-heated or oil-heated water, W_g, expressed in Btu's per cycle and defined as:

$W_g = V \times T \times C/e$

where,

V = water consumption in gallons per cycle, as determined in section 5.3.1 of this appendix for non-soil-sensing dishwashers and section 5.3.2 of this appendix for soil-sensing dishwashers,

T = nominal water heater temperature rise = 90 °F,

C = specific heat of water in Btu's per gallon per degree Fahrenheit = 8.2, and

e = nominal gas or oil water heater recovery efficiency = 0.75,

5.5.2 *Dishwashers that operate with a nominal inlet water temperature of 120 °F.* Calculate the water energy consumption using gas-heated or oil-heated water, W_g, expressed in Btu's per cycle and defined as:

$W_g = V \times T \times C/e$

where,

V = water consumption in gallons per cycle, as determined in section 5.3.1 of this appendix for non-soil-sensing dishwashers and section 5.3.2 of this appendix for soil-sensing dishwashers,

T = nominal water heater temperature rise = 70 °F,

C = specific heat of water in Btu's per gallon per degree Fahrenheit = 8.2, and

e = nominal gas or oil water heater recovery efficiency = 0.75.

5.6 *Annual standby energy consumption.* Calculate the estimated annual standby energy consumption. First determine the number of standby hours per year, H_s, defined as:

$H_s = H - (N \times L)$.

Where,

H = the total number of hours per year = 8766 hours per year,

N = the representative average dishwasher use of 215 cycles per year,

L = the average of the duration of the normal cycle and truncated normal cycle, for non-soil-sensing dishwashers with a truncated normal cycle; the duration of the normal cycle, for non-soil-sensing dishwashers without a truncated normal cycle; the average duration of the sensor light response, truncated sensor light response, sensor medium response, truncated sensor medium response, sensor heavy response, and truncated sensor heavy response, for soil-sensing dishwashers with a truncated cycle option; the average duration of the sensor light response, sensor medium response, and sensor heavy response, for soil-sensing dishwashers without a truncated cycle option.

Then calculate the estimated annual standby power use, S, expressed in kilowatt-hours per year and defined as:

$S = S_m \times ((H_s)/1000)$

Where,

S_m = the average standby power in watts as determined in section 4.4 of this appendix.

[68 FR 51900, Aug. 29, 2003, as amended at 77 FR 65980, Oct. 31, 2012]

APPENDIX C1 TO SUBPART B OF PART 430—UNIFORM TEST METHOD FOR MEASURING THE ENERGY CONSUMPTION OF DISHWASHERS

NOTE: Prior to the compliance date for any amended energy conservation standards that incorporate standby mode and off mode energy consumption (May 30, 2013 unless the direct final rule published on May 30, 2012 is withdrawn), manufacturers may use either Appendix C or Appendix C1 to certify compliance with existing DOE energy conservation standards and to make any representations related to energy and/or water consumption of dishwashers, with the following exception. If the compliance date is after April 29, 2013, manufacturers that make representations related to standby mode and off mode energy consumption must use Appendix C1 for any representations made after April 29, 2013 of the energy and/or water consumption of these products, consistent with the requirements of 42 U.S.C. 6293(c)(2).

After the compliance date for any amended energy conservation standards that incorporate standby mode and off mode energy consumption (May 30, 2013 unless the direct final rule published on May 30, 2012 is withdrawn), all dishwashers shall be tested using the provisions of Appendix C1 to certify compliance with amended energy conservation standards and to make any representations related to energy and/or water consumption, with the following exception. If the compliance date is before April 29, 2013, manufacturers may use Appendix C for any representations until April 29, 2013 of energy and/or water consumption of these products, consistent with the requirements of 42 U.S.C. 6293(c)(2).

1. DEFINITIONS

1.1 *Active mode* means a mode in which the dishwasher is connected to a mains power source, has been activated, and is performing one of the main functions of washing, rinsing, or drying (when a drying process is included) dishware, glassware, eating utensils, and most cooking utensils by chemical, mechanical, and/or electrical means, or is involved in functions necessary for these main functions, such as admitting water into the dishwasher, pumping water out of the dishwasher, circulating air, or regenerating an internal water softener.

1.2 *AHAM* means the Association of Home Appliance Manufacturers.

1.3 *Combined low-power mode* means the aggregate of available modes other than active mode.

1.4 *Compact dishwasher* means a dishwasher that has a capacity of less than eight place settings plus six serving pieces as specified in ANSI/AHAM DW–1–2010 (incorporated by reference; see §430.3), using the test load specified in section 2.7 of this appendix.

1.5 *Cycle* means a sequence of operations of a dishwasher which performs a complete dishwashing function, and may include variations or combinations of washing, rinsing, and drying.

1.6 *Cycle finished mode* means a standby mode which provides continuous status display following operation in active mode.

1.7 *Cycle type* means any complete sequence of operations capable of being preset on the dishwasher prior to the initiation of machine operation.

1.8 *Fan-only mode* means an active mode that is not user-selectable, and in which a fan circulates air for a finite period of time after the end of the cycle, where the end of the cycle is indicated to the consumer by means of a display, indicator light, or audible signal.

1.9 *IEC 62301* means the standard published by the International Electrotechnical Commission, titled ''Household electrical appliances-Measurement of standby power,'' Publication 62301 (Edition 2.0, 2011–01) (incorporated by reference; see §430.3).

1.10 *Inactive mode* means a standby mode that facilitates the activation of active mode by remote switch (including remote control), internal sensor, or timer, or that provides continuous status display.

1.11 *Non-soil-sensing dishwasher* means a dishwasher that does not have the ability to adjust automatically any energy consuming aspect of the normal cycle based on the soil load of the dishes.

1.12 *Normal cycle* means the cycle type, including washing and drying temperature options, recommended in the manufacturer's instructions for daily, regular, or typical use to completely wash a full load of normally soiled dishes including the power-dry feature. If no cycle or more than one cycle is recommended in the manufacturer's instructions for daily, regular, or typical use to completely wash a full load of normally soiled dishes, the most energy intensive of these cycles shall be considered the normal cycle. In the absence of a manufacturer recommendation on washing and drying temperature options, the highest energy consumption options must be selected.

1.13 *Off mode* means a mode in which the dishwasher is connected to a mains power source and is not providing any active mode or standby mode function, and where the mode may persist for an indefinite time. An indicator that only shows the user that the product is in the off position is included within the classification of an off mode.

1.14 *Power-dry feature* means the introduction of electrically-generated heat into the washing chamber for the purpose of improving the drying performance of the dishwasher.

1.15 *Preconditioning cycle* means a normal cycle run with no test load to ensure that the water lines and sump area of the pump are primed.

1.16 *Sensor heavy response* means, for standard dishwashers, the set of operations in a soil-sensing dishwasher for completely washing a load of dishes, four place settings of which are soiled according to ANSI/AHAM DW–1–2010 (incorporated by reference; see §430.3) and as additionally specified in section 2.7 of this appendix. For compact dishwashers, this definition is the same, except that two soiled place settings are used instead of four.

1.17 *Sensor light response* means, for both standard and compact dishwashers, the set of operations in a soil-sensing dishwasher for completely washing a load of dishes, one place setting of which is soiled with half of the gram weight of soils for each item specified in a single place setting according to ANSI/AHAM DW–1–2010 (incorporated by reference; see §430.3) and as additionally specified in section 2.7 of this appendix.

1.18 *Sensor medium response* means, for standard dishwashers, the set of operations in a soil-sensing dishwasher for completely washing a load of dishes, two place settings of which are soiled according to ANSI/AHAM DW–1–2010 (incorporated by reference; see §430.3) and as additionally specified in section 2.7 of this appendix. For compact dishwashers, this definition is the same, except that one soiled place setting is used instead of two.

1.19 *Soil-sensing dishwasher* means a dishwasher that has the ability to adjust any energy-consuming aspect of the normal cycle based on the soil load of the dishes.

1.20 *Standard dishwasher* means a dishwasher that has a capacity equal to or greater than eight place settings plus six serving pieces as specified in ANSI/AHAM DW–1–2010 (incorporated by reference; see §430.3), using the test load specified in section 2.7 of this appendix.

1.21 *Standby mode* means a mode in which the dishwasher is connected to a mains power source and offers one or more of the following user-oriented or protective functions which may persist for an indefinite time: (a) To facilitate the activation of other modes (including activation or deactivation of active mode) by remote switch (including remote control), internal sensor, or timer; (b) continuous functions, including information or status displays (including clocks) or sensor-based functions. A timer is a continuous clock function (which may or may not be associated with a display) that provides regular scheduled tasks (*e.g.*, switching) and that operates on a continuous basis.

1.22 *Truncated normal cycle* means the normal cycle interrupted to eliminate the power-dry feature after the termination of the last rinse operation.

1.23 *Truncated sensor heavy response* means the sensor heavy response interrupted to eliminate the power-dry feature after the termination of the last rinse operation.

1.24 *Truncated sensor light response* means the sensor light response interrupted to eliminate the power-dry feature after the termination of the last rinse operation.

1.25 *Truncated sensor medium response* means the sensor medium response interrupted to eliminate the power-dry feature after the termination of the last rinse operation.

1.26 *Water-heating dishwasher* means a dishwasher which, as recommended by the manufacturer, is designed for heating cold inlet water (nominal 50 °F) or designed for heating water with a nominal inlet temperature of 120 °F. Any dishwasher designated as water-heating (50 °F or 120 °F inlet water) must provide internal water heating to above 120 °F in a least one wash phase of the normal cycle.

1.27 *Water-softening dishwasher* means a dishwasher which incorporates a water softening system that periodically consumes additional water and energy during the cycle to regenerate.

2. Testing Conditions

2.1 *Installation requirements*. Install the dishwasher according to the manufacturer's instructions, including drain height. If the manufacture does not provide instructions for a specific drain height, the drain height shall be 20 inches. The racks shall be positioned according to the manufacturer recommendation for washing a full load of normally soiled dishes, or in the absence of a recommendation, the racks shall be maintained in the as-shipped position. The rinse aid container shall remain empty. A standard or compact under-counter or under-sink dishwasher must be tested in a rectangular enclosure constructed of nominal 0.374 inch (9.5 mm) plywood painted black. The enclosure must consist of a top, a bottom, a back, and two sides. If the dishwasher includes a counter top as part of the appliance, omit the top of the enclosure. Bring the enclosure into the closest contact with the appliance that the configuration of the dishwasher will allow. For standby mode and off mode testing, these products shall also be installed in accordance with Section 5, Paragraph 5.2 of IEC 62301 (incorporated by reference; see §430.3), disregarding the provisions regarding batteries and the determination, classification, and testing of relevant modes.

2.2 *Electrical energy supply*.

2.2.1 *Dishwashers that operate with an electrical supply of 115 volts*. Maintain the electrical supply to the dishwasher at 115 volts ±2 percent and within 1 percent of the nameplate frequency as specified by the manufacturer. Maintain a continuous electrical supply to the unit throughout testing, including

the preconditioning cycles, specified in section 2.9 of this appendix, and in between all test cycles.

2.2.2 *Dishwashers that operate with an electrical supply of 240 volts.* Maintain the electrical supply to the dishwasher at 240 volts ±2 percent and within 1 percent of the nameplate frequency as specified by the manufacturer. Maintain a continuous electrical supply to the unit throughout testing, including the preconditioning cycles, specified in section 2.9 of this appendix, and in between all test cycles.

2.2.3 *Supply voltage waveform.* For the standby mode and off mode testing, maintain the electrical supply voltage waveform indicated in Section 4, Paragraph 4.3.2 of IEC 62301 (incorporated by reference; see § 430.3).

2.3 *Water temperature.* Measure the temperature of the water supplied to the dishwasher using a temperature measuring device as specified in section 3.1 of this appendix.

2.3.1 *Dishwashers to be tested at a nominal 140 °F inlet water temperature.* Maintain the water supply temperature at 140° ±2 °F.

2.3.2 *Dishwashers to be tested at a nominal 120 °F inlet water temperature.* Maintain the water supply temperature at 120° ±2 °F.

2.3.3 *Dishwashers to be tested at a nominal 50 °F inlet water temperature.* Maintain the water supply temperature at 50° ±2 °F.

2.4 *Water pressure.* Using a water pressure gauge as specified in section 3.4 of this appendix, maintain the pressure of the water supply at 35 ±2.5 pounds per square inch gauge (psig) when the water is flowing. The pressure shall be achieved within 2 seconds of opening the water supply valve.

2.5 *Ambient temperature.*

2.5.1 *Active mode ambient and machine temperature.* Using a temperature measuring device as specified in section 3.1 of this appendix, maintain the room ambient air temperature at 75° ±5 °F and ensure that the dishwasher and the test load are at room ambient temperature at the start of each test cycle.

2.5.2 *Standby mode and off mode ambient temperature.* For standby mode and off mode testing, maintain room ambient air temperature conditions as specified in Section 4, Paragraph 4.2 of IEC 62301 (incorporated by reference; see § 430.3).

2.6 *Test cycle and load.*

2.6.1 *Non-soil-sensing dishwashers to be tested at a nominal inlet temperature of 140 °F.* All non-soil-sensing dishwashers to be tested according to section 4.1 of this appendix at a nominal inlet temperature of 140 °F must be tested on the normal cycle and truncated normal cycle without a test load if the dishwasher does not heat water in the normal cycle.

2.6.2 *Non-soil-sensing dishwashers to be tested at a nominal inlet temperature of 50 °F or 120 °F.* All non-soil-sensing dishwashers to be tested according to section 4.1 of this appendix at a nominal inlet temperature of 50 °F or 120 °F must be tested on the normal cycle with a clean load of eight place settings plus six serving pieces, as specified in section 2.7 of this appendix. If the capacity of the dishwasher, as stated by the manufacturer, is less than eight place settings, then the test load must be the stated capacity.

2.6.3 *Soil-sensing dishwashers to be tested at a nominal inlet temperature of 50 °F, 120 °F, or 140 °F.* All soil-sensing dishwashers shall be tested according to section 4.1 of this appendix on the normal cycle. The dishwasher shall be tested first for the sensor heavy response, then tested for the sensor medium response, and finally for the sensor light response with the following combinations of soiled and clean test loads.

2.6.3.1 For tests of the sensor heavy response, as defined in section 1.16 of this appendix:

(A) For standard dishwashers, the test unit is to be loaded with a total of eight place settings plus six serving pieces as specified in section 2.7 of this appendix. Four of the eight place settings, except for the flatware, must be soiled according to sections 5.3 through 5.7 of ANSI/AHAM DW–1–2010 (incorporated by reference, see § 430.3) and as additionally specified in sections 2.7.4 and 2.7.5 of this appendix, while the remaining place settings, serving pieces, and all flatware are not soiled. The test load is to be loaded in the dishwasher according to section 5.8 of ANSI/AHAM DW–1–2010.

(B) For compact dishwashers, the test unit is to be loaded with four place settings plus six serving pieces as specified in section 2.7 of this appendix. Two of the four place settings, except for the flatware, must be soiled according to sections 5.3 through 5.7 of ANSI/AHAM DW–1–2010 and as additionally specified in sections 2.7.4 and 2.7.5 of this appendix, while the remaining place settings, serving pieces, and all flatware are not soiled. The test load is to be loaded in the dishwasher according to section 5.8 of ANSI/AHAM DW–1–2010.

2.6.3.2 For tests of the sensor medium response, as defined in section 1.18 of this appendix:

(A) For standard dishwashers, the test unit is to be loaded with a total of eight place settings plus six serving pieces as specified in section 2.7 of this appendix. Two of the eight place settings, except for the flatware, must be soiled according to sections 5.3 through 5.7 of ANSI/AHAM DW–1–2010 (incorporated by reference, see § 430.3) and as additionally specified in sections 2.7.4 and 2.7.5 of this appendix, while the remaining place settings, serving pieces, and all flatware are not soiled. The test load is to be loaded in the dishwasher according to section 5.8 of ANSI/AHAM DW–1–2010.

(B) For compact dishwashers, the test unit is to be loaded with four place settings plus six serving pieces as specified in section 2.7 of this appendix. One of the four place settings, except for the flatware, must be soiled according to sections 5.3 through 5.7 of ANSI/AHAM DW–1–2010 and as additionally specified in sections 2.7.4 and 2.7.5 of this appendix, while the remaining place settings, serving pieces, and all flatware are not soiled. The test load is to be loaded in the dishwasher according to section 5.8 of ANSI/AHAM DW–1–2010.

2.6.3.3 For tests of the sensor light response, as defined in section 1.17 of this appendix:

(A) For standard dishwashers, the test unit is to be loaded with a total of eight place settings plus six serving pieces as specified in section 2.7 of this appendix. One of the eight place settings, except for the flatware, must be soiled with half of the soil load specified for a single place setting according to sections 5.3 through 5.7 of ANSI/AHAM DW–1–2010 (incorporated by reference, see § 430.3) and as additionally specified in sections 2.7.4 and 2.7.5 of this appendix, while the remaining place settings, serving pieces, and all flatware are not soiled. The test load is to be loaded in the dishwasher according to section 5.8 of ANSI/AHAM DW–1–2010.

(B) For compact dishwashers, the test unit is to be loaded with four place settings plus six serving pieces as specified in section 2.7 of this appendix. One of the four place settings, except for the flatware, must be soiled with half of the soil load specified for a single place setting according to sections 5.3 through 5.7 of ANSI/AHAM DW–1–2010 and as additionally specified in sections 2.7.4 and 2.7.5 of this appendix, while the remaining place settings, serving pieces, and all flatware are not soiled. The test load is to be loaded in the dishwasher according to section 5.8 of ANSI/AHAM DW–1–2010.

2.7 *Test load*.

2.7.1 *Test load items*.

Dishware/glassware/flatware item	Primary source	Description	Primary No.	Alternate source	Alternate source No.
Dinner Plate	Corning Comcor®/Corelle®.	10 inch Dinner Plate	6003893	.	
Bread and Butter Plate	Corning Comcor®/Corelle®.	6.75 inch Bread & Butter	6003887	Arzberg	8500217100 or 2000–00001–0217–1
Fruit Bowl	Corning Comcor®/Corelle®.	10 oz. Dessert Bowl	6003899	Arzberg	3820513100
Cup	Corning Comcor®/Corelle®.	8 oz. Ceramic Cup	6014162	Arzberg	1382–00001–4732
Saucer	Corning Comcor®/Corelle®.	6 inch Saucer	6010972	Arzberg	1382–00001–4731
Serving Bowl	Corning Comcor®/Corelle®.	1 qt. Serving Bowl	6003911	.	
Platter	Corning Comcor®/Corelle®.	9.5 inch Oval Platter	6011655	.	
Glass—Iced Tea	Libbey		551 HT	.	
Flatware—Knife	Oneida®—Accent		2619KPVF	WMF—Gastro 0800.	12.0803.6047
Flatware—Dinner Fork	Oneida®—Accent		2619FRSF	WMF—Signum 1900.	12.1905.6040
Flatware—Salad Fork	Oneida®—Accent		2619FSLF	WMF—Signum 1900.	12.1964.6040
Flatware—Teaspoon	Oneida®—Accent		2619STSF	WMF—Signum 1900.	12.1910.6040
Flatware—Serving Fork	Oneida®—Flight		2865FCM	WMF—Signum 1900.	12.1902.6040
Flatware—Serving Spoon.	Oneida®—Accent		2619STBF	WMF—Signum 1900.	12.1904.6040

2.7.2 *Place setting*. A place setting shall consist of one cup, one saucer, one dinner plate, one bread and butter plate, one fruit bowl, one iced tea glass, one dinner fork, one salad fork, one knife, and two teaspoons.

2.7.3 *Serving pieces*. Serving pieces shall consist of two serving bowls, one platter, one serving fork, and two serving spoons.

2.7.4 *Soils*. The soils shall be as specified in section 5.4 of ANSI/AHAM DW–1–2010 (incorporated by reference, see § 430.3), except for the following substitutions.

2.7.4.1 *Margarine*. The margarine shall be Fleischmann's Original stick margarine.

2.7.4.2 *Coffee*. The coffee shall be Folgers Classic Decaf.

2.7.5 *Soil Preparation*. Soils shall be prepared according to section 5.5 of ANSI/AHAM DW–1–2010 (incorporated by reference, see § 430.3), with the following additional specifications.

2.7.5.1 *Milk*. The nonfat dry milk shall be reconstituted before mixing with the oatmeal and potatoes. It shall be reconstituted

with water by mixing ⅔ cup of nonfat dry milk with 2 cups of water until well mixed. The reconstituted milk may be stored for use over the course of 1 day.

2.7.5.2 *Instant mashed potatoes*. The potato mixture shall be applied within 30 minutes of preparation.

2.7.5.3 *Ground beef*. The 1-pound packages of ground beef shall be stored frozen for no more than 6 months.

2.8 *Testing requirements*. Provisions in this appendix pertaining to dishwashers that operate with a nominal inlet temperature of 50 °F or 120 °F apply only to water-heating dishwashers as defined in section 1.26 of this appendix.

2.9 *Preconditioning requirements*. Precondition the dishwasher twice by establishing the testing conditions set forth in sections 2.1 through 2.5 of this appendix. For each preconditioning, set the dishwasher to the preconditioning cycle as defined in section 1.15 of this appendix, without using a test load, and initiate the cycle. During the second preconditioning, measure the prewash fill water volume, V_{pw}, if any, and the main wash fill water volume, V_{mw}.

2.10 *Detergent*. Use half the quantity of detergent specified according to section 4.1 of ANSI/AHAM DW–1–2010 (incorporated by reference, see §430.3), using Cascade with the Grease Fighting Power of Dawn powder as the detergent formulation. Determine the amount of detergent (in grams) to be added to the prewash compartment (if provided) or elsewhere in the dishwasher (if recommended by the manufacturer) and the main wash compartment according to sections 2.10.1 and 2.10.2 of this appendix.

2.10.1 *Prewash Detergent Dosing*. If the cycle setting for the test cycle includes prewash, determine the quantity of dry prewash detergent, D_{pw}, in grams (g) that results in 0.25 percent concentration by mass in the prewash fill water as:

$$D_{pw} = V_{pw} \times \rho \times k \times 0.25/100$$

where,

V_{pw} = the prewash fill volume of water in gallons,

ρ = water density = 8.343 pounds (lb)/gallon for dishwashers to be tested at a nominal inlet water temperature of 50 °F (10 °C), 8.250 lb/gallon for dishwashers to be tested at a nominal inlet water temperature of 120 °F (49 °C), and 8.205 lb/gallon for dishwashers to be tested at a nominal inlet water temperature of 140 °F (60 °C), and

k = conversion factor from lb to g = 453.6 g/lb.

2.10.2 *Main Wash Detergent Dosing*. Determine the quantity of dry main wash detergent, D_{mw}, in grams (g) that results in 0.25 percent concentration by mass in the main wash fill water as:

$$D_{mw} = V_{mw} \times \rho \times k \times 0.25/100$$

where,

V_{mw} = the main wash fill volume of water in gallons, and

ρ, and k are defined in section 2.10.1 of this appendix.

3. Instrumentation

Test instruments must be calibrated annually.

3.1 *Temperature measuring device*. The device must have an error no greater than ±1 °F over the range being measured.

3.2 *Timer*. Time measurements for each monitoring period shall be accurate to within 2 seconds.

3.3 *Water meter*. The water meter must have a resolution of no larger than 0.1 gallons and a maximum error no greater than ±1.5 percent of the measured flow rate for all water temperatures encountered in the test cycle.

3.4 *Water pressure gauge*. The water pressure gauge must have a resolution of one pound per square inch (psi) and must have an error no greater than 5 percent of any measured value over the range of 35 ±2.5 psig.

3.5 *Watt-hour meter*. The watt-hour meter must have a resolution of .1 watt-hour or less and a maximum error of no more than 1 percent of the measured value for any demand greater than 5 watts.

3.6 *Standby mode and off mode watt meter*. The watt meter used to measure standby mode and off mode power consumption shall meet the requirements specified in Section 4, Paragraph 4.4 of IEC 62301 (incorporated by reference, see §430.3).

4. Test Cycle and Measurements

4.1 *Active mode cycle*. Perform a test cycle by establishing the testing conditions set forth in section 2 of this appendix, setting the dishwasher to the cycle type to be tested according to section 2.6.1, 2.6.2, or 2.6.3 of this appendix, initiating the cycle, and allowing the cycle to proceed to completion.

4.1.1 *Machine electrical energy consumption*. Measure the machine electrical energy consumption, M, expressed as the number of kilowatt-hours of electricity consumed by the machine during the entire test cycle, using a water supply temperature as set forth in section 2.3 of this appendix and using a watt-hour meter as specified in section 3.5 of this appendix.

4.1.2 *Fan electrical energy consumption*. If the dishwasher is capable of operation in fan-only mode, measure the fan electrical energy consumption, M_F, expressed as the number of kilowatt-hours of electricity consumed by the machine for the duration of fan-only mode, using a watt-hour meter as specified in section 3.5 of this appendix. Alternatively, if the duration of fan-only mode is known, the watt-hours consumed may be measured for a period of 10 minutes in fan-only mode,

using a watt-hour meter as specified in section 3.5 of this appendix. Multiply this value by the time in minutes that the dishwasher remains in fan-only mode, L_F, and divide by 10,000 to obtain M_F. The alternative approach may be used only if the resulting M_F is representative of energy use during the entire fan-only mode.

4.1.3 *Water consumption.* Measure the water consumption, V, expressed as the number of gallons of water delivered to the machine during the entire test cycle, using a water meter specified in section 3.3 of this appendix.

4.2 *Standby mode and off mode power.* Connect the dishwasher to a standby mode and off mode watt meter as specified in section 3.6 of this appendix. Establish the testing conditions set forth in sections 2.1, 2.2, and 2.5.2 of this appendix. For dishwashers that take some time to enter a stable state from a higher power state as discussed in Section 5, Paragraph 5.1, note 1 of IEC 62301 (incorporated by reference; see §430.3), allow sufficient time for the dishwasher to reach the lower power state before proceeding with the test measurement. Follow the test procedure specified in Section 5, Paragraph 5.3.2 of IEC 62301 for testing in each possible mode as described in sections 4.2.1 and 4.2.2 of this appendix.

4.2.1 If the dishwasher has an inactive mode, as defined in section 1.10 of this appendix, measure and record the average inactive mode power of the dishwasher, P_{IA}, in watts.

4.2.2 If the dishwasher has an off mode, as defined in section 1.13 of this appendix, measure and record the average off mode power, P_{OM}, in watts.

5. Calculation of Derived Results From Test Measurements

5.1 *Machine energy consumption.*

5.1.1 *Machine energy consumption for non-soil-sensing electric dishwashers.* Take the value recorded in section 4.1.1 of this appendix as the per-cycle machine electrical energy consumption. Express the value, M, in kilowatt-hours per cycle.

5.1.2 *Machine energy consumption for soil-sensing electric dishwashers.* The machine energy consumption for the sensor normal cycle, M, is defined as:

$$M = (M_{hr} \times F_{hr}) + (M_{mr} \times F_{mr}) + (M_{lr} \times F_{lr})$$

where,

M_{hr} = the value recorded in section 4.1.1 of this appendix for the test of the sensor heavy response, expressed in kilowatt-hours per cycle,

M_{mr} = the value recorded in section 4.1.1 of this appendix for the test of the sensor medium response, expressed in kilowatt-hours per cycle,

M_{lr} = the value recorded in section 4.1.1 of this appendix for the test of the sensor light response, expressed in kilowatt-hours per cycle,

F_{hr} = the weighting factor based on consumer use of heavy response = 0.05,

F_{mr} = the weighting factor based on consumer use of medium response = 0.33, and

F_{lr} = the weighting factor based on consumer use of light response = 0.62.

5.1.3 *Machine energy consumption during water softener regeneration for water-softening dishwashers.* The machine energy consumption for water softener regeneration, M_{WS}, is defined as:

$$M_{WS} = M_{WScycle} \times N_{WS}/N$$

where,

$M_{WScycle}$ = the reported value of the additional machine electrical energy consumption required for water softener regeneration during a cycle including water softener regeneration, expressed in kilowatt-hours,

N_{WS} = the reported representative average number of water softener regeneration cycles per year, and

N = the representative average dishwasher use of 215 cycles per year.

5.2 *Fan-only mode energy consumption.*

5.2.1 *Electrical energy consumption for fan-only mode for non-soil-sensing electric dishwashers.* Take the value recorded in section 4.1.2 of this appendix as the per-cycle electrical energy consumption for fan-only mode. Express the value, E_F, in kilowatt-hours per cycle. If the dishwasher is not capable of operation in fan-only mode, $E_F = 0$.

5.2.2 *Electrical energy consumption for fan-only mode for soil-sensing electric dishwashers.* The fan-only mode electrical energy consumption, E_F, for the sensor normal cycle is defined as:

$$E_F = (E_{Fhr} + E_{Fmr} + E_{Flr})/3$$

where,

E_{Fhr} = the value recorded in section 4.1.2 of this appendix for the test of the sensor heavy response, expressed in kilowatt-hours per cycle,

E_{Fmr} = the value recorded in section 4.1.2 of this appendix for the test of the sensor medium response, expressed in kilowatt-hours per cycle,

E_{Flr} = the value recorded in section 4.1.2 of this appendix for the test of the sensor light response, expressed in kilowatt-hours per cycle,

If the dishwasher is not capable of operation in fan-only mode, $E_F = 0$.

5.3 *Drying energy.*

5.3.1 *Drying energy consumption for non-soil-sensing electric dishwashers.* Calculate the amount of energy consumed using the power-dry feature after the termination of the last rinse option of the normal cycle. Express the value, E_D, in kilowatt-hours per cycle.

5.3.2 *Drying energy consumption for soil-sensing electric dishwashers.* The drying energy

consumption, E_D, for the sensor normal cycle is defined as:

$E_D = (E_{Dhr} + E_{Dmr} + E_{Dlr})/3$

where,

E_{Dhr} = energy consumed using the power-dry feature after the termination of the last rinse option of the sensor heavy response, expressed in kilowatt-hours per cycle,

E_{Dmr} = energy consumed using the power-dry feature after the termination of the last rinse option of the sensor medium response, expressed in kilowatt-hours per cycle,

E_{Dlr} = energy consumed using the power-dry feature after the termination of the last rinse option of the sensor light response, expressed in kilowatt-hours per cycle,

5.4 *Water consumption.*

5.4.1 *Water consumption for non-soil-sensing electric dishwashers using electrically heated, gas-heated, or oil-heated water.* Take the value recorded in section 4.1.3 of this appendix as the per-cycle water consumption. Express the value, V, in gallons per cycle.

5.4.2 *Water consumption for soil-sensing electric dishwashers using electrically heated, gas-heated, or oil-heated water.* The water consumption for the sensor normal cycle, V, is defined as:

$V = (V_{hr} \times F_{hr}) + (V_{mr} \times F_{mr}) + (V_{lr} \times F_{lr})$

where,

V_{hr} = the value recorded in section 4.1.3 of this appendix for the test of the sensor heavy response, expressed in gallons per cycle,

V_{mr} = the value recorded in section 4.1.3 of this appendix for the test of the sensor medium response, expressed in gallons per cycle,

V_{lr} = the value recorded in section 4.1.3 of this appendix for the test of the sensor light response, expressed in gallons per cycle,

F_{hr} = the weighting factor based on consumer use of heavy response = 0.05,

F_{mr} = the weighting factor based on consumer use of medium response = 0.33, and

F_{lr} = the weighting factor based on consumer use of light response = 0.62.

5.4.3 *Water consumption during water softener regeneration for water-softening dishwashers using electrically heated, gas-heated, or oil-heated water.* The water consumption for water softener regeneration, $V_{WS,}$ is defined as:

$V_{WS} = V_{WScycle} \times N_{WS}/N$

where,

$V_{WScycle}$ = the reported value of the additional water consumption required for water softener regeneration during a cycle including water softener regeneration, expressed in gallons per cycle,

N_{WS} = the reported representative average number of water softener regeneration cycles per year, and

N = the representative average dishwasher use of 215 cycles per year.

5.5 *Water energy consumption for non-soil-sensing or soil-sensing dishwashers using electrically heated water.*

5.5.1 *Dishwashers that operate with a nominal 140 °F inlet water temperature, only.*

5.5.1.1 Calculate the water energy consumption, W, expressed in kilowatt-hours per cycle and defined as:

$W = V \times T \times K$

where,

V = water consumption in gallons per cycle, as determined in section 5.4.1 of this appendix for non-soil-sensing dishwashers and section 5.4.2 of this appendix for soil-sensing dishwashers,

T = nominal water heater temperature rise = 90 °F, and

K = specific heat of water in kilowatt-hours per gallon per degree Fahrenheit = 0.0024.

5.5.1.2 For water-softening dishwashers, calculate the water softener regeneration water energy consumption, W_{WS}, expressed in kilowatt-hours per cycle and defined as:

$W_{WS} = V_{WS} \times T \times K$

where,

V_{WS} = water consumption during water softener regeneration in gallons per cycle which includes regeneration, as determined in section 5.4.3 of this appendix,

T = nominal water heater temperature rise = 90 °F, and

K = specific heat of water in kilowatt-hours per gallon per degree Fahrenheit = 0.0024.

5.5.2 *Dishwashers that operate with a nominal inlet water temperature of 120 °F.*

5.5.2.1 Calculate the water energy consumption, W, expressed in kilowatt-hours per cycle and defined as:

$W = V \times T \times K$

where,

V = water consumption in gallons per cycle, as determined in section 5.4.1 of this appendix for non-soil-sensing dishwashers and section 5.4.2 of this appendix for soil-sensing dishwashers,

T = nominal water heater temperature rise = 70 °F, and

K = specific heat of water in kilowatt-hours per gallon per degree Fahrenheit = 0.0024,

5.5.2.2 For water-softening dishwashers, calculate the water softener regeneration water energy consumption, W_{WS}, expressed in kilowatt-hours per cycle and defined as:

$W_{WS} = V_{WS} \times T \times K$

where,

V_{WS} = water consumption during water softener regeneration in gallons per cycle

which includes regeneration, as determined in section 5.4.3 of this appendix,

T = nominal water heater temperature rise = 70 °F, and

K = specific heat of water in kilowatt-hours per gallon per degree Fahrenheit = 0.0024.

5.6 *Water energy consumption per cycle using gas-heated or oil-heated water.*

5.6.1 *Dishwashers that operate with a nominal 140 °F inlet water temperature, only.*

5.6.1.1 Calculate the water energy consumption using gas-heated or oil-heated water, W_g, expressed in Btu's per cycle and defined as:

$W_g = V \times T \times C / e$

where,

V = water consumption in gallons per cycle, as determined in section 5.4.1 of this appendix for non-soil-sensing dishwashers and section 5.4.2 of this appendix for soil-sensing dishwashers,

T = nominal water heater temperature rise = 90 °F,

C = specific heat of water in Btu's per gallon per degree Fahrenheit = 8.2, and

e = nominal gas or oil water heater recovery efficiency = 0.75,

5.6.1.2 For water-softening dishwashers, calculate the water softener regeneration water energy consumption, W_{WSg}, expressed in kilowatt-hours per cycle and defined as:

$W_{WSg} = V_{WS} \times T \times C/e$

where,

V_{WS} = water consumption during water softener regeneration in gallons per cycle which includes regeneration, as determined in section 5.4.3 of this appendix,

T = nominal water heater temperature rise = 90 °F,

C = specific heat of water in Btu's per gallon per degree Fahrenheit = 8.2, and

e = nominal gas or oil water heater recovery efficiency = 0.75.

5.6.2 *Dishwashers that operate with a nominal 120 °F inlet water temperature, only.*

5.6.2.1 Calculate the water energy consumption using gas-heated or oil-heated water, W_g, expressed in Btu's per cycle and defined as:

$W_g = V \times T \times C/e$

where,

V = water consumption in gallons per cycle, as determined in section 5.4.1 of this appendix for non-soil-sensing dishwashers and section 5.4.2 of this appendix for soil-sensing dishwashers,

T = nominal water heater temperature rise = 70 °F,

C = specific heat of water in Btu's per gallon per degree Fahrenheit = 8.2, and

e = nominal gas or oil water heater recovery efficiency = 0.75.

5.6.2.2 For water-softening dishwashers, calculate the water softener regeneration water energy consumption, W_{WSg}, expressed in kilowatt-hours per cycle and defined as:

$W_{WSg} = V_{WS} \times T \times C/e$

where,

V_{WS} = water consumption during water softener regeneration in gallons per cycle which includes regeneration, as determined in section 5.4.3 of this appendix,

T = nominal water heater temperature rise = 70 °F,

C = specific heat of water in Btu's per gallon per degree Fahrenheit = 8.2, and

e = nominal gas or oil water heater recovery efficiency = 0.75.

5.7 *Annual combined low-power mode energy consumption.* Calculate the annual combined low-power mode energy consumption for dishwashers, E_{TLP}, expressed in kilowatt-hours per year, according to the following:

$E_{TLP} = [(P_{IA} \times S_{IA}) + (P_{OM} \times S_{OM})] \times K$

where:

P_{IA} = dishwasher inactive mode power, in watts, as measured in section 4.2.1 of this appendix for dishwashers capable of operating in inactive mode; otherwise, P_{IA} = 0,

P_{OM} = dishwasher off mode power, in watts, as measured in section 4.2.2 of this appendix for dishwashers capable of operating in off mode; otherwise, P_{OM} = 0,

S_{IA} = annual hours in inactive mode as defined as S_{LP} if no off mode is possible, [S_{LP}/2] if both inactive mode and off mode are possible, and 0 if no inactive mode is possible,

S_{OM} = annual hours in off mode as defined as S_{LP} if no inactive mode is possible, [S_{LP}/2] if both inactive mode and off mode are possible, and 0 if no off mode is possible,

S_{LP} = combined low-power annual hours for all available modes other than active mode as defined as [$H - (N \times (L + L_F))$] for dishwashers capable of operating in fan-only mode; otherwise, S_{LP} = 8,465,

H = the total number of hours per year = 8766 hours per year,

N = the representative average dishwasher use of 215 cycles per year,

L = the average of the duration of the normal cycle and truncated normal cycle, for non-soil-sensing dishwashers with a truncated normal cycle; the duration of the normal cycle, for non-soil-sensing dishwashers without a truncated normal cycle; the average duration of the sensor light response, truncated sensor light response, sensor medium response, truncated sensor medium response, sensor heavy response, and truncated sensor heavy response, for soil-sensing dishwashers with a truncated cycle option; the average duration of the sensor light response, sensor medium response, and sensor heavy response, for soil-sensing

dishwashers without a truncated cycle option,

L_F = the duration of the fan-only mode for the normal cycle for non-soil-sensing dishwashers; the average duration of the fan-only mode for sensor light response, sensor medium response, and sensor heavy response for soil-sensing dishwashers, and

K = 0.001 kWh/Wh conversion factor for watt-hours to kilowatt-hours.

[77 FR 65982, Oct. 31, 2012]

APPENDIX D TO SUBPART B OF PART 430—UNIFORM TEST METHOD FOR MEASURING THE ENERGY CONSUMPTION OF CLOTHES DRYERS

NOTE: Effective February 10, 2014, manufacturers must make representations of energy efficiency, including certifications of compliance, using appendix D. Compliance with DOE's amended standards for clothes dryers, and corresponding use of the test procedures at appendix D1 for all representations, including certifications of compliance, is required as of January 1, 2015. Manufacturers must use a single appendix for all representations, including certifications of compliance, and may not use appendix D for certain representations and appendix D1 for other representations. The procedures in appendix D2 need not be performed to determine compliance with energy conservation standards for clothes dryers at this time. However, manufacturers may elect to use the amended appendix D, D1 or D2 early.

1. Definitions

1.1 ''AHAM'' means the Association of Home Appliance Manufacturers.

1.2 ''Bone dry'' means a condition of a load of test clothes which has been dried in a dryer at maximum temperature for a minimum of 10 minutes, removed and weighed before cool down, and then dried again for 10-minute periods until the final weight change of the load is 1 percent or less.

1.3 ''Compact'' or compact size'' means a clothes dryer with a drum capacity of less than 4.4 cubic feet.

1.4 ''Cool down'' means that portion of the clothes drying cycle when the added gas or electric heat is terminated and the clothes continue to tumble and dry within the drum.

1.5 ''Cycle'' means a sequence of operation of a clothes dryer which performs a clothes drying operation, and may include variations or combinations of the functions of heating, tumbling and drying.

1.6 ''Drum capacity'' means the volume of the drying drum in cubic feet.

1.7 ''HLD–1'' means the test standard promulgated by AHAM and titled ''AHAM Performance Evaluation Procedure for Household Tumble Type Clothes Dryers'', June 1974, and designated as HLD–1.

1.8 ''HLD–2EC'' means the test standard promulgated by AHAM and titled ''Test Method for Measuring Energy Consumption of Household Tumble Type Clothes Dryers,'' December 1975, and designated as HLD–2EC.

1.9 ''Standard size'' means a clothes dryer with a drum capacity of 4.4 cubic feet or greater.

1.10 ''Moisture content'' means the ratio of the weight of water contained by the test load to the bone-dry weight of the test load, expressed as a percent.

1.11 ''Automatic termination control'' means a dryer control system with a sensor which monitors either the dryer load temperature or its moisture content and with a controller which automatically terminates the drying process. A mark or detent which indicates a preferred automatic termination control setting must be present if the dryer is to be classified as having an ''automatic termination control.'' A mark is a visible single control setting on one or more dryer controls.

1.12 ''Temperature sensing control'' means a system which monitors dryer exhaust air temperature and automatically terminates the dryer cycle.

1.13 ''Moisture sensing control'' means a system which utilizes a moisture sensing element within the dryer drum that monitors the amount of moisture in the clothes and automatically terminates the dryer cycle.

2. Testing Conditions

2.1 *Installation*. Install the clothes dryer in accordance with manufacturer's instructions as shipped with the unit. If the manufacturer's instructions do not specify the installation requirements for a certain component, it shall be tested in the as-shipped condition. The dryer exhaust shall be restricted by adding the AHAM exhaust simulator described in 3.3.5 of HLD–1. All external joints should be taped to avoid air leakage. Disconnect all lights, such as task lights, that do not provide any information related to the drying process on the clothes dryer and that do not consume more than 10 watts during the clothes dryer test cycle. Control setting indicator lights showing the cycle progression, temperature or dryness settings, or other cycle functions that cannot be turned off during the test cycle shall not be disconnected during the active mode test cycle.

2.2 *Ambient temperature and humidity*. Maintain the room ambient air temperature at 75 ±3 °F and the room relative humidity at 50±10 percent relative humidity.

2.3 Energy supply.

2.3.1 *Electrical supply*. Maintain the electrical supply at the clothes dryer terminal block within 1 percent of 120/240 or 120/208Y or 120 volts as applicable to the particular terminal block wiring system and within 1

percent of the nameplate frequency as specified by the manufacturer. If the dryer has a dual voltage conversion capability, conduct test at the highest voltage specified by the manufacturer.

2.3.2 *Gas supply*.

2.3.2.1 *Natural gas*. Maintain the gas supply to the clothes dryer at a normal inlet test pressure immediately ahead of all controls at 7 to 10 inches of water column. If the clothes dryer is equipped with a gas appliance pressure regulator, the regulator outlet pressure at the normal test pressure shall be within ±10 percent of the value recommended by the manufacturer in the installation manual, on the nameplate sticker, or wherever the manufacturer makes such a recommendation for the basic model. The hourly Btu rating of the burner shall be maintained within ±5 percent of the rating specified by the manufacturer. If the requirement to maintain the hourly Btu rating of the burner within ±5 percent of the rating specified by the manufacturer cannot be achieved under the allowable range in gas inlet test pressure, the orifice of the gas burner should be modified as necessary to achieve the required Btu rating. The natural gas supplied should have a heating value of approximately 1,025 Btus per standard cubic foot. The actual heating value, H_n2, in Btus per standard cubic foot, for the natural gas to be used in the test shall be obtained either from measurements made by the manufacturer conducting the test using a standard continuous flow calorimeter as described in section 2.4.6 or by the purchase of bottled natural gas whose Btu rating is certified to be at least as accurate a rating as could be obtained from measurements with a standard continuous flow calorimeter as described in section 2.4.6.

2.3.2.2 *Propane gas*. Maintain the gas supply to the clothes dryer at a normal inlet test pressure immediately ahead of all controls at 11 to 13 inches of water column. If the clothes dryer is equipped with a gas appliance pressure regulator, the regulator outlet pressure at the normal test pressure shall be within ±10 percent of the value recommended by the manufacturer in the installation manual, on the nameplate sticker, or wherever the manufacturer makes such a recommendation for the basic model. The hourly Btu rating of the burner shall be maintained within ±5 percent of the rating specified by the manufacturer. If the requirement to maintain the hourly Btu rating of the burner within ±5 percent of the rating specified by the manufacturer cannot be achieved under the allowable range in gas inlet test pressure, the orifice of the gas burner should be modified as necessary to achieve the required Btu rating. The propane gas supplied should have a heating value of approximately 2,500 Btus per standard cubic foot. The actual heating value, H_p, in Btus per standard cubic foot, for the propane gas to be used in the test shall be obtained either from measurements made by the manufacturer conducting the test using a standard continuous flow calorimeter as described in section 2.4.6 or by the purchase of bottled gas whose Btu rating is certified to be at least as accurate a rating as could be obtained from measurement with a standard continuous calorimeter as described in section 2.4.6.

2.4 *Instrumentation*. Perform all test measurements using the following instruments as appropriate.

2.4.1 *Weighing scale for test cloth*. The scale shall have a range of 0 to a maximum of 60 pounds with a resolution of at least 0.2 ounces and a maximum error no greater than 0.3 percent of any measured value within the range of 3 to 15 pounds.

2.4.1.2 *Weighing scale for drum capacity measurements*. The scale should have a range of 0 to a maximum of 600 pounds with resolution of 0.50 pounds and a maximum error no greater than 0.5 percent of the measured value.

2.4.2 *Kilowatt-hour meter*. The kilowatt-hour meter shall have a resolution of 0.001 kilowatt-hours and a maximum error no greater than 0.5 percent of the measured value.

2.4.3 *Gas meter*. The gas meter shall have a resolution of 0.001 cubic feet and a maximum error no greater than 0.5 percent of the measured value.

2.4.4 *Dry and wet bulb psychrometer*. The dry and wet bulb psychrometer shall have an error no greater than ±1 °F. A relative humidity meter with a maximum error tolerance expressed in °F equivalent to the requirements for the dry and wet bulb psychrometer or with a maximum error tolerance of ±2 percent relative humidity would be acceptable for measuring the ambient humidity.

2.4.5 *Temperature*. The temperature sensor shall have an error no greater than ±1 °F.

2.4.6 *Standard Continuous Flow Calorimeter*. The Calorimeter shall have an operating range of 750 to 3,500 Btu per cubic feet. The maximum error of the basic calorimeter shall be no greater than 0.2 percent of the actual heating value of the gas used in the test. The indicator readout shall have a maximum error no greater than 0.5 percent of the measured value within the operating range and a resolution of 0.2 percent of the full scale reading of the indicator instrument.

2.5 *Lint trap*. Clean the lint trap thoroughly before each test run.

2.6 *Test cloths*.

2.6.1 *Energy test cloth*. The energy test cloth shall be clean and consist of the following:

(a) Pure finished bleached cloth, made with a momie or granite weave, which is a blended fabric of 50 percent cotton and 50 percent polyester and weighs within +10 percent of 5.75 ounces per square yard after test cloth

preconditioning and has 65 ends on the warp and 57 picks on the fill. The individual warp and fill yarns are a blend of 50 percent cotton and 50 percent polyester fibers.

(b) Cloth material that is 24 inches by 36 inches and has been hemmed to 22 inches by 34 inches before washing. The maximum shrinkage after five washes shall not be more than four percent on the length and width.

(c) The number of test runs on the same energy test cloth shall not exceed 25 runs.

2.6.2 *Energy stuffer cloths*. The energy stuffer cloths shall be made from energy test cloth material and shall consist of pieces of material that are 12 inches by 12 inches and have been hemmed to 10 inches by 10 inches before washing. The maximum shrinkage after five washes shall not be more than four percent on the length and width. The number of test runs on the same energy stuffer cloth shall not exceed 25 runs after test cloth preconditioning.

2.6.3 *Test Cloth Preconditioning*.

A new test cloth load and energy stuffer cloths shall be treated as follows:

(1) Bone dry the load to a weight change of ±1 percent, or less, as prescribed in Section 1.2.

(2) Place test cloth load in a standard clothes washer set at the maximum water fill level. Wash the load for 10 minutes in soft water (17 parts per million hardness or less), using 6.0 grams of AHAM Standard Test Detergent, IIA, per gallon of water. Wash water temperature is to controlled at 140°±5 °F (60° ±2.7 °C). Rinse water temperature is to be controlled at 100° ±5 °F (37.7 ±2.7 °C).

(3) Rinse the load again at the same water temperature.

(4) Bone dry the load as prescribed in Section 1.2 and weigh the load.

(5) This procedure is repeated until there is a weight change of one percent or less.

(6) A final cycle is to be a hot water wash with no detergent, followed by two warm water rinses.

2.7 *Test loads*.

2.7.1 *Compact size dryer load*. Prepare a bone-dry test load of energy cloths which weighs 3.00 pounds ±.03 pounds. Adjustments to the test load to achieve the proper weight can be made by the use of energy stuffer cloths, with no more than five stuffer cloths per load. Dampen the load by agitating it in water whose temperature is 100° ±5 °F and consists of 0 to 17 parts per million hardness for approximately two minutes in order to saturate the fabric. Then, extract water from the wet test load by spinning the load until the moisture content of the load is between 66.5 percent to 73.5 percent of the bone-dry weight of the test load.

2.7.2 *Standard size dryer load*. Prepare a bone-dry test load of energy cloths which weighs 7.00 pounds ±.07 pounds. Adjustments to the test load to achieve the proper weight can be made by the use of energy stuffer cloths, with no more than five stuffer cloths per load. Dampen the load by agitating it in water whose temperature is 100° ±5 °F and consists of 0 to 17 parts per million hardness for approximately two minutes in order to saturate the fabric. Then, extract water from the wet test load by spinning the load until the moisture content of the load is between 66.5 percent to 73.5 percent of the bone-dry weight of the test load.

2.7.3 *Method of loading*. Load the energy test cloths by grasping them in the center, shaking them to hang loosely and then dropping them in the dryer at random.

2.8 *Clothes dryer preconditioning*. Before any test cycle, operate the dryer without a test load in the non-heat mode for 15 minutes or until the discharge air temperature is varying less than 1 °F for 10 minutes, which ever is longer, in the test installation location with the ambient conditions within the specified rest condition tolerances of 2.2.

3. Test Procedures and Measurements

3.1 *Drum Capacity*. Measure the drum capacity by sealing all openings in the drum except the loading port with a plastic bag, and ensure that all corners and depressions are filled and that there are no extrusions of the plastic bag through any openings in the interior of the drum. Support the dryer's rear drum surface on a platform scale to prevent deflection of the dryer, and record the weight of the empty dryer. Fill the drum with water to a level determined by the intersection of the door plane and the loading port (*i.e.*, the uppermost edge of the drum that is in contact with the door seal). Record the temperature of the water and then the weight of the dryer with the added water and then determine the mass of the water in pounds. Add the appropriate volume to account for any space in the drum interior not measured by water fill (e.g., the space above the uppermost edge of the drum within a curved door) and subtract the appropriate volume to account for space that is measured by water fill but cannot be used when the door is closed (e.g., space occupied by the door when closed). The drum capacity is calculated as follows:

C = w/d ±volume adjustment

C = capacity in cubic feet.

w = mass of water in pounds.

d = density of water at the measured temperature in pounds per cubic foot.

3.2 *Dryer loading*. Load the dryer as specified in 2.7.

3.3 *Test cycle*. Operate the clothes dryer at the maximum temperature setting and, if equipped with a timer, at the maximum time setting. Any other optional cycle settings that do not affect the temperature or time settings shall be tested in the as-shipped position. If the clothes dryer does not have a separate temperature setting selection on

the control panel, the maximum time setting should be used for the drying test cycle. Dry the test load until the moisture content of the test load is between 2.5 percent and 5.0 percent of the bone-dry weight of the test load, but do not permit the dryer to advance into cool down. If required, reset the timer or automatic dry control.

3.4 *Data recording*. Record for each test cycle:

3.4.1 Bone-dry weight of the test load described in 2.7.

3.4.2 Moisture content of the wet test load before the test, as described in 2.7.

3.4.3 Moisture content of the dry test load obtained after the test described in 3.3.

3.4.4 Test room conditions, temperature and percent relative humidity described in 2.2.

3.4.5 For electric dryers—the total kilowatt-hours of electric energy, E_t, consumed during the test described in 3.3.

3.4.6 For gas dryers:

3.4.6.1 Total kilowatt-hours of electrical energy, E_{te}, consumed during the test described in 3.3.

3.4.6.2 Cubic feet of gas per cycle, E_{tg}, consumed during the test described in 3.3.

3.4.6.3 On gas dryers using a continuously burning pilot light—the cubic feet of gas, E_{pg}, consumed by the gas pilot light in one hour.

3.4.6.4 Correct the gas heating value, GEF, as measured in 2.3.2.1 and 2.3.2.2, to standard pressure and temperature conditions in accordance with U.S. Bureau of Standards, circular C417, 1938. A sample calculation is illustrated in appendix E of HLD–1.

3.5 *Test for automatic termination field use factor credits*. Credit for automatic termination can be claimed for those dryers which meet the requirements for either temperature-sensing control, 1.12, or moisture sensing control, 1.13, and having present the appropriate mark or detent feed defined in 1.11.

4. Calculation of Derived Results From Test Measurements

4.1 *Total per-cycle electric dryer energy consumption*. Calculate the total electric dryer energy consumption per cycle, E_{ce} expressed in kilowatt-hours per cycle and defined as:

$E_{ce} = [66/W_w - W_d)]\times E_{tt}\times FU$

E_t = the energy recorded in 3.4.5.

66=an experimentally established value for the percent reduction in the moisture content of the test load during a laboratory test cycle expressed as a percent.

FU=Field use factor.

=1.18 for time termination control systems.

=1.04 for automatic control systems which meet the requirements of the definitions for automatic termination controls in 1.11.1, 1.12 and 1.13.

W_w = the moisture content of the wet test load as recorded in 3.4.2.

W_d = the moisture content of the dry test load as recorded in 3.4.3.

4.2 *Per-cycle gas dryer electrical energy consumption*. Calculate the gas dryer electrical energy consumption per cycle, E_{ge}, expressed in kilowatt-hours per cycle and defined as:

$E_{GE} = [66/(W_w - W_d)]\times E_{te}\times FU$

E_{TE} = the energy recorded in 3.4.6.1

FU, 66, W_w, W_d as defined in 4.1

4.3 *Per-cycle gas dryer gas energy consumption*. Calculate the gas dryer gas energy consumption per cycle, $E_{ge.}$ expressed in Btu's per cycle as defined as:

$E_{GG} = [66/(W_w - W_d)]\times E_{tg}\times FU\times GEF$

E_{TG} = the energy recorded in 3.4.6.2

GEF = corrected gas heat value (Btu per cubic feet) as defined in 3.4.6.4

FU, 66, W_w W_d as defined in 4.1

4.4 *Per-cycle gas dryer continuously burning pilot light gas energy consumption*. Calculate the gas dryer continuously burning pilot light gas energy consumption per cycle, E_{up} expressed in Btu's per cycle and defined as:

$E_{up} = E_{pg}\times(8760 - 140/416)\times GEF$

E_{pg} = the energy recorded in 3.4.6.3

8760=number of hours in a year

416=representative average number of clothes dryer cycles in a year

140=estimated number of hours that the continuously burning pilot light is on during the operation of the clothes dryer for the representative average use cycle for clothes dryers (416 cycles per year)

GEF as defined in 4.3

4.5 *Total per-cycle gas dryer gas energy consumption expressed in Btu's*. Calculate the total gas dryer energy consumption per cycle, E_g, expressed in Btu's per cycle and defined as:

$E_g = E_{gg}+E_{up}$

E_{gg} as defined in 4.3

E_{up} as defined in 4.4

4.6 *Total per-cycle gas dryer energy consumption expressed in kilowatt-hours*. Calculate the total gas dryer energy consumption per cycle, E_{cg}, expressed in kilowatt-hours per cycle and defined as:

$E_{cg} = E_{ge}+(E_g/3412\ Btu/k\ Wh)$

E_{ge} as defined in 4.2

E_g as defined in 4.5

[46 FR 27326, May 19, 1981, as amended at 76 FR 1032, Jan. 6, 2011; 78 FR 49644, Aug. 14, 2013]

APPENDIX D1 TO SUBPART B OF PART 430—UNIFORM TEST METHOD FOR MEASURING THE ENERGY CONSUMPTION OF CLOTHES DRYERS

NOTE: Effective February 10, 2014, manufacturers must make representations of energy efficiency, including certifications of compliance, using appendix D. Compliance with DOE's amended standards for clothes dryers, and corresponding use of the test procedures

at appendix D1 for all representations, including certifications of compliance, is required as of January 1, 2015. Manufacturers must use a single appendix for all representations, including certifications of compliance, and may not use appendix D for certain representations and appendix D1 for other representations. The procedures in appendix D2 need not be performed to determine compliance with energy conservation standards for clothes dryers at this time. However, manufacturers may elect to use the amended appendix D, D1, or D2 early.

1. DEFINITIONS

1.1 ''Active mode'' means a mode in which the clothes dryer is connected to a main power source, has been activated and is performing the main function of tumbling the clothing with or without heated or unheated forced air circulation to remove moisture from the clothing, remove wrinkles or prevent wrinkling of the clothing, or both.

1.2 ''AHAM'' means the Association of Home Appliance Manufacturers.

1.3 ''AHAM HLD–1'' means the test standard published by the Association of Home Appliance Manufacturers, titled ''Household Tumble Type Clothes Dryers'' (2009), AHAM HLD–1–2009 (incorporated by reference; see § 430.3).

1.4 ''Automatic termination control'' means a dryer control system with a sensor which monitors either the dryer load temperature or its moisture content and with a controller which automatically terminates the drying process. A mark, detent, or other visual indicator or detent which indicates a preferred automatic termination control setting must be present if the dryer is to be classified as having an ''automatic termination control.'' A mark is a visible single control setting on one or more dryer controls.

1.5 ''Bone dry'' means a condition of a load of test clothes which has been dried in a dryer at maximum temperature for a minimum of 10 minutes, removed, and weighed before cool down, and then dried again for 10-minute periods until the final weight change of the load is 1 percent or less.

1.6 ''Compact'' or ''compact size'' means a clothes dryer with a drum capacity of less than 4.4 cubic feet.

1.7 ''Conventional clothes dryer'' means a clothes dryer that exhausts the evaporated moisture from the cabinet.

1.8 ''Cool down'' means that portion of the clothes drying cycle when the added gas or electric heat is terminated and the clothes continue to tumble and dry within the drum.

1.9 ''Cycle'' means a sequence of operation of a clothes dryer which performs a clothes drying operation, and may include variations or combinations of the functions of heating, tumbling, and drying.

1.10 ''Drum capacity'' means the volume of the drying drum in cubic feet.

1.11 ''IEC 62301'' (Second Edition) means the test standard published by the International Electrotechnical Commission (''IEC'') titled ''Household electrical appliances—Measurement of standby power,'' Publication 62301 (Edition 2.0 2011–01) (incorporated by reference; see § 430.3).

1.12 ''Inactive mode'' means a standby mode that facilitates the activation of active mode by remote switch (including remote control), internal sensor, or timer, or that provides continuous status display.

1.13 ''Moisture content'' means the ratio of the weight of water contained by the test load to the bone-dry weight of the test load, expressed as a percent.

1.14 ''Moisture sensing control'' means a system which utilizes a moisture sensing element within the dryer drum that monitors the amount of moisture in the clothes and automatically terminates the dryer cycle.

1.15 ''Off mode'' means a mode in which the clothes dryer is connected to a main power source and is not providing any active or standby mode function, and where the mode may persist for an indefinite time. An indicator that only shows the user that the product is in the off position is included within the classification of an off mode.

1.16 ''Standard size'' means a clothes dryer with a drum capacity of 4.4 cubic feet or greater.

1.17 ''Standby mode'' means any product modes where the energy using product is connected to a main power source and offers one or more of the following user-oriented or protective functions which may persist for an indefinite time:

(a) To facilitate the activation of other modes (including activation or deactivation of active mode) by remote switch (including remote control), internal sensor, or timer.

(b) Continuous functions, including information or status displays (including clocks) or sensor-based functions. A timer is a continuous clock function (which may or may not be associated with a display) that provides regular scheduled tasks (e.g., switching) and that operates on a continuous basis.

1.18 ''Temperature sensing control'' means a system which monitors dryer exhaust air temperature and automatically terminates the dryer cycle.

1.19 ''Ventless clothes dryer'' means a clothes dryer that uses a closed-loop system with an internal condenser to remove the evaporated moisture from the heated air. The moist air is not discharged from the cabinet.

2. TESTING CONDITIONS

2.1 *Installation.*

2.1.1 *All clothes dryers.* For both conventional clothes dryers and ventless clothes dryers, as defined in sections 1.7 and 1.19 of

this appendix, install the clothes dryer in accordance with manufacturer's instructions as shipped with the unit. If the manufacturer's instructions do not specify the installation requirements for a certain component, it shall be tested in the as-shipped condition. Where the manufacturer gives the option to use the dryer both with and without a duct, the dryer shall be tested without the exhaust simulator described in section 3.3.5.1 of AHAM HLD–1 (incorporated by reference; see § 430.3). All external joints should be taped to avoid air leakage. For drying testing, disconnect all lights, such as task lights, that do not provide any information related to the drying process on the clothes dryer and that do not consume more than 10 watts during the clothes dryer test cycle. Control setting indicator lights showing the cycle progression, temperature or dryness settings, or other cycle functions that cannot be turned off during the test cycle shall not be disconnected during the active mode test cycle. For standby and off mode testing, the clothes dryer shall also be installed in accordance with section 5, paragraph 5.2 of IEC 62301 (Second Edition) (incorporated by reference; see § 430.3), disregarding the provisions regarding batteries and the determination, classification, and testing of relevant modes. For standby and off mode testing, all lighting systems shall remain connected.

2.1.2 *Conventional clothes dryers.* For conventional clothes dryers, as defined in section 1.7 of this appendix, the dryer exhaust shall be restricted by adding the AHAM exhaust simulator described in section 3.3.5.1 of AHAM HLD–1 (incorporated by reference; see § 430.3).

2.1.3 *Ventless clothes dryers.* For ventless clothes dryers, as defined in section 1.19, the dryer shall be tested without the AHAM exhaust simulator. If the manufacturer gives the option to use a ventless clothes dryer, with or without a condensation box, the dryer shall be tested with the condensation box installed. For ventless clothes dryers, the condenser unit of the dryer must remain in place and not be taken out of the dryer for any reason between tests.

2.2 *Ambient temperature and humidity.*

2.2.1 For drying testing, maintain the room ambient air temperature at 75 ±3 °F and the room relative humidity at 50 ±10 percent relative humidity.

2.2.2 For standby and off mode testing, maintain room ambient air temperature conditions as specified in section 4, paragraph 4.2 of IEC 62301 (Second Edition) (incorporated by reference; see § 430.3)

2.3 *Energy supply.*

2.3.1 *Electrical supply.* Maintain the electrical supply at the clothes dryer terminal block within 1 percent of 120/240 or 120/208Y or 120 volts as applicable to the particular terminal block wiring system and within 1 percent of the nameplate frequency as specified by the manufacturer. If the dryer has a dual voltage conversion capability, conduct the test at the highest voltage specified by the manufacturer.

2.3.1.1 *Supply voltage waveform.* For the clothes dryer standby mode and off mode testing, maintain the electrical supply voltage waveform indicated in section 4, paragraph 4.3.2 of IEC 62301 (Second Edition) (incorporated by reference; see § 430.3). If the power measuring instrument used for testing is unable to measure and record the total harmonic content during the test measurement period, it is acceptable to measure and record the total harmonic content immediately before and after the test measurement period.

2.3.2 *Gas supply.*

2.3.2.1 *Natural gas.* Maintain the gas supply to the clothes dryer immediately ahead of all controls at a pressure of 7 to 10 inches of water column. If the clothes dryer is equipped with a gas appliance pressure regulator for which the manufacturer specifies an outlet pressure, the regulator outlet pressure shall be within ±10 percent of the value recommended by the manufacturer in the installation manual, on the nameplate sticker, or wherever the manufacturer makes such a recommendation for the basic model. The hourly Btu rating of the burner shall be maintained within ±5 percent of the rating specified by the manufacturer. If the requirement to maintain the hourly Btu rating of the burner within ±5 percent of the rating specified by the manufacturer cannot be achieved under the allowable range in gas inlet test pressure, the orifice of the gas burner should be modified as necessary to achieve the required Btu rating. The natural gas supplied should have a heating value of approximately 1,025 Btus per standard cubic foot. The actual heating value, H_n2, in Btus per standard cubic foot, for the natural gas to be used in the test shall be obtained either from measurements made by the manufacturer conducting the test using a standard continuous flow calorimeter as described in section 2.4.6 or by the purchase of bottled natural gas whose Btu rating is certified to be at least as accurate a rating as could be obtained from measurements with a standard continuous flow calorimeter as described in section 2.4.6.

2.3.2.2 *Propane gas.* Maintain the gas supply to the clothes dryer immediately ahead of all controls at a pressure of 11 to 13 inches of water column. If the clothes dryer is equipped with a gas appliance pressure regulator for which the manufacturer specifies an outlet pressure, the regulator outlet pressure shall be within ±10 percent of the value recommended by the manufacturer in the installation manual, on the nameplate sticker, or wherever the manufacturer makes such a recommendation for the basic model. The hourly Btu rating of the burner shall be

maintained within ±5 percent of the rating specified by the manufacturer. If the requirement to maintain the hourly Btu rating of the burner within ±5 percent of the rating specified by the manufacturer cannot be achieved under the allowable range in gas inlet test pressure, the orifice of the gas burner should be modified as necessary to achieve the required Btu rating. The propane gas supplied should have a heating value of approximately 2,500 Btus per standard cubic foot. The actual heating value, H_p, in Btus per standard cubic foot, for the propane gas to be used in the test shall be obtained either from measurements made by the manufacturer conducting the test using a standard continuous flow calorimeter as described in section 2.4.6 or by the purchase of bottled gas whose Btu rating is certified to be at least as accurate a rating as could be obtained from measurement with a standard continuous calorimeter as described in section 2.4.6.

2.4 *Instrumentation*. Perform all test measurements using the following instruments as appropriate.

2.4.1 *Weighing scale for test cloth*. The scale shall have a range of 0 to a maximum of 60 pounds with a resolution of at least 0.2 ounces and a maximum error no greater than 0.3 percent of any measured value within the range of 3 to 15 pounds.

2.4.1.2 *Weighing scale for drum capacity measurements*. The scale should have a range of 0 to a maximum of 600 pounds with resolution of 0.50 pounds and a maximum error no greater than 0.5 percent of the measured value.

2.4.2 *Kilowatt-hour meter*. The kilowatt-hour meter shall have a resolution of 0.001 kilowatt-hours and a maximum error no greater than 0.5 percent of the measured value.

2.4.3 *Gas meter*. The gas meter shall have a resolution of 0.001 cubic feet and a maximum error no greater than 0.5 percent of the measured value.

2.4.4 *Dry and wet bulb psychrometer*. The dry and wet bulb psychrometer shall have an error no greater than ±1 °F. A relative humidity meter with a maximum error tolerance expressed in °F equivalent to the requirements for the dry and wet bulb psychrometer or with a maximum error tolerance of ±2 percent relative humidity would be acceptable for measuring the ambient humidity.

2.4.5 *Temperature*. The temperature sensor shall have an error no greater than ±1 °F.

2.4.6 *Standard Continuous Flow Calorimeter*. The calorimeter shall have an operating range of 750 to 3,500 Btu per cubic feet. The maximum error of the basic calorimeter shall be no greater than 0.2 percent of the actual heating value of the gas used in the test. The indicator readout shall have a maximum error no greater than 0.5 percent of the measured value within the operating range and a resolution of 0.2 percent of the full-scale reading of the indicator instrument.

2.4.7 *Standby mode and off mode watt meter*. The watt meter used to measure standby mode and off mode power consumption shall meet the requirements specified in section 4, paragraph 4.4 of IEC 62301 (Second Edition) (incorporated by reference; see §430.3). If the power measuring instrument used for testing is unable to measure and record the crest factor, power factor, or maximum current ratio during the test measurement period, it is acceptable to measure the crest factor, power factor, and maximum current ratio immediately before and after the test measurement period.

2.5 *Lint trap*. Clean the lint trap thoroughly before each test run.

2.6 *Test Clothes*.

2.6.1 *Energy test cloth*. The energy test cloth shall be clean and consist of the following:

(a) Pure finished bleached cloth, made with a momie or granite weave, which is a blended fabric of 50-percent cotton and 50-percent polyester and weighs within +10 percent of 5.75 ounces per square yard after test cloth preconditioning, and has 65 ends on the warp and 57 picks on the fill. The individual warp and fill yarns are a blend of 50-percent cotton and 50-percent polyester fibers.

(b) Cloth material that is 24 inches by 36 inches and has been hemmed to 22 inches by 34 inches before washing. The maximum shrinkage after five washes shall not be more than 4 percent on the length and width.

(c) The number of test runs on the same energy test cloth shall not exceed 25 runs.

2.6.2 *Energy stuffer cloths*. The energy stuffer cloths shall be made from energy test cloth material, and shall consist of pieces of material that are 12 inches by 12 inches and have been hemmed to 10 inches by 10 inches before washing. The maximum shrinkage after five washes shall not be more than 4 percent on the length and width. The number of test runs on the same energy stuffer cloth shall not exceed 25 runs after test cloth preconditioning.

2.6.3 *Test Cloth Preconditioning*.

A new test cloth load and energy stuffer cloths shall be treated as follows:

(1) Bone dry the load to a weight change of ±1 percent, or less, as prescribed in section 1.5.

(2) Place the test cloth load in a standard clothes washer set at the maximum water fill level. Wash the load for 10 minutes in soft water (17 parts per million hardness or less), using 60.8 grams of AHAM standard test detergent Formula 3. Wash water temperature is to be controlled at 140 ° ±5 °F (60 ° ±2.7 °C). Rinse water temperature is to be controlled at 100 ° ±5 °F (37.7 ±2.7 °C).

(3) Rinse the load again at the same water temperature.

(4) Bone dry the load as prescribed in section 1.5 and weigh the load.

(5) This procedure is repeated until there is a weight change of 1 percent or less.

(6) A final cycle is to be a hot water wash with no detergent, followed by two warm water rinses.

2.7 *Test loads.*

2.7.1 *Compact size dryer load.* Prepare a bone-dry test load of energy cloths which weighs 3.00 pounds ±.03 pounds. Adjustments to the test load to achieve the proper weight can be made by the use of energy stuffer cloths, with no more than five stuffer cloths per load. Dampen the load by agitating it in water whose temperature is 60 °F ±5 °F and consists of 0 to 17 parts per million hardness for approximately 2 minutes in order to saturate the fabric. Then, extract water from the wet test load by spinning the load until the moisture content of the load is between 54.0–61.0 percent of the bone-dry weight of the test load.

2.7.2 *Standard size dryer load.* Prepare a bone-dry test load of energy cloths which weighs 8.45 pounds ±.085 pounds. Adjustments to the test load to achieve the proper weight can be made by the use of energy stuffer cloths, with no more than five stuffer cloths per load. Dampen the load by agitating it in water whose temperature is 60 °F ±5 °F and consists of 0 to 17 parts per million hardness for approximately 2 minutes in order to saturate the fabric. Then, extract water from the wet test load by spinning the load until the moisture content of the load is between 54.0–61.0 percent of the bone-dry weight of the test load.

2.7.3 *Method of loading.* Load the energy test cloths by grasping them in the center, shaking them to hang loosely, and then dropping them in the dryer at random.

2.8 *Clothes dryer preconditioning.*

2.8.1 *Conventional clothes dryers.* For conventional clothes dryers, before any test cycle, operate the dryer without a test load in the non-heat mode for 15 minutes or until the discharge air temperature is varying less than 1 °F for 10 minutes—whichever is longer—in the test installation location with the ambient conditions within the specified test condition tolerances of 2.2.

2.8.2 *Ventless clothes dryers.* For ventless clothes dryers, before any test cycle, the steady-state machine temperature must be equal to ambient room temperature described in 2.2.1. This may be done by leaving the machine at ambient room conditions for at least 12 hours between tests.

3. Test Procedures and Measurements

3.1 *Drum Capacity.* Measure the drum capacity by sealing all openings in the drum except the loading port with a plastic bag, and ensuring that all corners and depressions are filled and that there are no extrusions of the plastic bag through any openings in the interior of the drum. Support the dryer's rear drum surface on a platform scale to prevent deflection of the drum surface, and record the weight of the empty dryer. Fill the drum with water to a level determined by the intersection of the door plane and the loading port (*i.e.*, the uppermost edge of the drum that is in contact with the door seal). Record the temperature of the water and then the weight of the dryer with the added water and then determine the mass of the water in pounds. Add the appropriate volume to account for any space in the drum interior not measured by water fill (e.g., the space above the uppermost edge of the drum within a curved door) and subtract the appropriate volume to account for space that is measured by water fill but cannot be used when the door is closed (e.g., space occupied by the door when closed). The drum capacity is calculated as follows:

C = w/d ±volume adjustment

C = capacity in cubic feet.

w = mass of water in pounds.

d = density of water at the measured temperature in pounds per cubic foot.

3.2 *Dryer Loading.* Load the dryer as specified in 2.7.

3.3 *Test cycle.* Operate the clothes dryer at the maximum temperature setting and, if equipped with a timer, at the maximum time setting. Any other optional cycle settings that do not affect the temperature or time settings shall be tested in the as-shipped position. If the clothes dryer does not have a separate temperature setting selection on the control panel, the maximum time setting should be used for the drying test cycle. Dry the load until the moisture content of the test load is between 2.5 and 5.0 percent of the bone-dry weight of the test load, at which point the test cycle is stopped, but do not permit the dryer to advance into cool down. If required, reset the timer to increase the length of the drying cycle. After stopping the test cycle, remove and weigh the test load. The clothes dryer shall not be stopped intermittently in the middle of the test cycle for any reason. Record the data specified by section 3.4 of this appendix. If the dryer automatically stops during a cycle because the condensation box is full of water, the test is stopped, and the test run is invalid, in which case the condensation box shall be emptied and the test re-run from the beginning. For ventless dryers, as defined in section 1.19 of this appendix, during the time between two cycles, the door of the dryer shall be closed except for loading (and unloading).

3.4 *Data recording.* Record for each test cycle:

3.4.1 Bone-dry weight of the test load described in 2.7.

3.4.2 Moisture content of the wet test load before the test, as described in 2.7.

3.4.3 Moisture content of the dry test load obtained after the test described in 3.3.

3.4.4 Test room conditions, temperature, and percent relative humidity described in 2.2.1.

3.4.5 For electric dryers—the total kilowatt-hours of electric energy, E_t, consumed during the test described in 3.3.

3.4.6 For gas dryers:

3.4.6.1 Total kilowatt-hours of electrical energy, E_{te}, consumed during the test described in 3.3.

3.4.6.2 Cubic feet of gas per cycle, E_{tg}, consumed during the test described in 3.3.

3.4.6.3 Correct the gas heating value, GEF, as measured in 2.3.2.1 and 2.3.2.2, to standard pressure and temperature conditions in accordance with U.S. Bureau of Standards, circular C417, 1938.

3.5 *Test for automatic termination field use factor*. The field use factor for automatic termination can be claimed for those dryers which meet the requirements for automatic termination control, defined in 1.4.

3.6 *Standby mode and off mode power*. Establish the testing conditions set forth in Section 2 ''Testing Conditions'' of this appendix. For clothes dryers that take some time to enter a stable state from a higher power state as discussed in Section 5, Paragraph 5.1, Note 1 of IEC 62301 (Second Edition) (incorporated by reference; see §430.3), allow sufficient time for the clothes dryer to reach the lower power state before proceeding with the test measurement. Follow the test procedure specified in section 5, paragraph 5.3.2 of IEC 62301 (Second Edition) for testing in each possible mode as described in sections 3.6.1 and 3.6.2 of this appendix.

3.6.1 If a clothes dryer has an inactive mode, as defined in 1.12, measure and record the average inactive mode power of the clothes dryer, P_{IA}, in watts.

3.6.2 If a clothes dryer has an off mode, as defined in 1.15, measure and record the average off mode power of the clothes dryer, P_{OFF}, in watts.

4. Calculation of Derived Results From Test Measurements

4.1 *Total Per-cycle electric dryer energy consumption*. Calculate the total electric dryer energy consumption per cycle, E_{ce}, expressed in kilowatt-hours per cycle and defined as:

$$E_{ce} = [53.5/(W_w - W_d)] \times E_{tt} \times \text{field use},$$

Where:

53.5 = an experimentally established value for the percent reduction in the moisture content of the test load during a laboratory test cycle expressed as a percent.

field use = field use factor.

= 1.18 for clothes dryers with time termination control systems only without any automatic termination control functions.

= 1.04 clothes dryers with automatic control systems that meet the requirements of the definition for automatic control systems in 1.4, 1.14 and 1.18, including those that also have a supplementary timer control, or that may also be manually controlled.

W_w = the moisture content of the wet test load as recorded in 3.4.2.

W_d = the moisture content of the dry test load as recorded in 3.4.3.

4.2 *Per-cycle gas dryer electrical energy consumption*. Calculate the gas dryer electrical energy consumption per cycle, E_{ge}, expressed in kilowatt-hours per cycle and defined as:

$$E_{ge} = [53.5/(W_w - W_d)] \times E_{te} \times \text{field use},$$

Where:

E_{te} = the energy recorded in 3.4.6.1 field use, 53.5, W_w, W_d as defined in 4.1.

4.3 *Per-cycle gas dryer gas energy consumption*. Calculate the gas dryer gas energy consumption per cycle, E_{ge}, expressed in Btus per cycle as defined as:

$$E_{gg} = [53.5/(W_w - W_d)] \times E_{tg} \times \text{field use} \times \text{GEF}$$

Where:

E_{tg} = the energy recorded in 3.4.6.2

GEF = corrected gas heat value (Btu per cubic feet) as defined in 3.4.6.3, field use, 53.5, W_w, W_d as defined in 4.1.

4.4 *Total per-cycle gas dryer energy consumption expressed in kilowatt-hours*. Calculate the total gas dryer energy consumption per cycle, E_{cg}, expressed in kilowatt-hours per cycle and defined as:

$$E_{cg} = E_{ge} + (E_{gg}/3412 \text{ Btu/kWh})$$

Where:

E_{ge} as defined in 4.2

E_{gg} as defined in 4.3

4.5 *Per-cycle standby mode and off mode energy consumption*. Calculate the dryer inactive mode and off mode energy consumption per cycle, E_{TSO}, expressed in kWh per cycle and defined as:

$$E_{TSO} = [(P_{IA} \times S_{IA}) + (P_{OFF} \times S_{OFF})] \times K/283$$

Where:

P_{IA} = dryer inactive mode power, in watts, as measured in section 3.6.1;

P_{OFF} = dryer off mode power, in watts, as measured in section 3.6.2.

If the clothes dryer has both inactive mode and off mode, S_{IA} and S_{OFF} both equal 8,620 ÷ 2 = 4,310, where 8,620 is the total inactive and off mode annual hours;

If the clothes dryer has an inactive mode but no off mode, the inactive mode annual hours, S_{IA}, is equal to 8,620 and the off mode annual hours, S_{OFF}, is equal to 0;

If the clothes dryer has an off mode but no inactive mode, S_{IA} is equal to 0 and S_{OFF} is equal to 8,620

Where:

K = 0.001 kWh/Wh conversion factor for watt-hours to kilowatt-hours; and

283 = representative average number of clothes dryer cycles in a year.

4.6 *Per-cycle combined total energy consumption expressed in kilowatt-hours*. Calculate the per-cycle combined total energy consumption, E_{CC}, expressed in kilowatt-hours per cycle and defined for an electric clothes dryer as:

$E_{CC} = E_{ce} + E_{TSO}$

Where:

E_{ce} = the energy recorded in section 4.1 of this appendix, and

E_{TSO} = the energy recorded in section 4.5 of this appendix, and defined for a gas clothes dryer as:

$E_{CC} = E_{cg} + E_{TSO}$

Where:

E_{cg} = the energy recorded in section 4.4 of this appendix, and

E_{TSO} = the energy recorded in section 4.5 of this appendix.

4.7 *Energy Factor in pounds per kilowatt-hour*. Calculate the energy factor, EF, expressed in pounds per kilowatt-hour and defined for an electric clothes dryer as:

$EF = W_{bonedry}/E_{ce}$

Where:

$W_{bonedry}$ = the bone dry test load weight recorded in 3.4.1, and

E_{ce} = the energy recorded in 4.1, and

and defined for a gas clothes dryer as:

$EF = W_{bonedry}/E_{cg}$

Where:

$W_{bonedry}$ = the bone dry test load weight recorded in 3.4.1, and

E_{cg} = the energy recorded in 4.4,

4.8 *Combined Energy Factor in pounds per kilowatt-hour*. Calculate the combined energy factor, CEF, expressed in pounds per kilowatt-hour and defined as:

$CEF = W_{bonedry}/E_{CC}$

Where:

$W_{bonedry}$ = the bone dry test load weight 3.4.1, and

E_{CC} = the energy recorded in 4.6

[76 FR 1032, Jan. 6, 2011, as amended at 78 FR 49645, Aug. 14, 2013]

APPENDIX D2 TO SUBPART B OF PART 430—UNIFORM TEST METHOD FOR MEASURING THE ENERGY CONSUMPTION OF CLOTHES DRYERS

NOTE: The procedures in appendix D2 need not be performed to determine compliance with energy conservation standards for clothes dryers at this time. Manufacturers may elect to use the amended appendix D2 early to show compliance with the January 1, 2015 energy conservation standards. Manufacturers must use a single appendix for all representations, including certifications of compliance, and may not use appendix D1 for certain representations and appendix D2 for other representations.

1. Definitions

1.1 ''Active mode'' means a mode in which the clothes dryer is connected to a main power source, has been activated and is performing the main function of tumbling the clothing with or without heated or unheated forced air circulation to remove moisture from the clothing, remove wrinkles or prevent wrinkling of the clothing, or both.

1.2 ''AHAM'' means the Association of Home Appliance Manufacturers.

1.3 ''AHAM HLD–1'' means the test standard published by the Association of Home Appliance Manufacturers, titled ''Household Tumble Type Clothes Dryers,'' (2009), AHAM HLD–1–2009 (incorporated by reference; see § 430.3).

1.4 ''Automatic termination control'' means a dryer control system with a sensor which monitors either the dryer load temperature or its moisture content and with a controller which automatically terminates the drying process. A mark, detent, or other visual indicator or detent which indicates a preferred automatic termination control setting must be present if the dryer is to be classified as having an ''automatic termination control.'' A mark is a visible single control setting on one or more dryer controls.

1.5 ''Automatic termination control dryer'' means a clothes dryer which can be preset to carry out at least one sequence of operations to be terminated by means of a system assessing, directly or indirectly, the moisture content of the load. An automatic termination control dryer with supplementary timer or that may also be manually controlled shall be tested as an automatic termination control dryer.

1.6 ''Bone dry'' means a condition of a load of test clothes which has been dried in a dryer at maximum temperature for a minimum of 10 minutes, removed, and weighed before cool down, and then dried again for 10-minute periods until the final weight change of the load is 1 percent or less.

1.7 ''Compact'' or ''compact size'' means a clothes dryer with a drum capacity of less than 4.4 cubic feet.

1.8 ''Conventional clothes dryer'' means a clothes dryer that exhausts the evaporated moisture from the cabinet.

1.9 ''Cool down'' means that portion of the clothes drying cycle when the added gas or electric heat is terminated and the clothes continue to tumble and dry within the drum.

1.10 ''Cycle'' means a sequence of operation of a clothes dryer which performs a clothes

drying operation, and may include variations or combinations of the functions of heating, tumbling, and drying.

1.11 ''Drum capacity'' means the volume of the drying drum in cubic feet.

1.12 ''IEC 62301'' (Second Edition) means the test standard published by the International Electrotechnical Commission (''IEC'') titled ''Household electrical appliances—Measurement of standby power,'' Publication 62301 (Edition 2.0 2011–01) (incorporated by reference; see § 430.3).

1.13 ''Inactive mode'' means a standby mode that facilitates the activation of active mode by remote switch (including remote control), internal sensor, or timer, or that provides continuous status display.

1.14 ''Moisture content'' means the ratio of the weight of water contained by the test load to the bone-dry weight of the test load, expressed as a percent.

1.15 ''Moisture sensing control'' means a system which utilizes a moisture sensing element within the dryer drum that monitors the amount of moisture in the clothes and automatically terminates the dryer cycle.

1.16 ''Off mode'' means a mode in which the clothes dryer is connected to a main power source and is not providing any active or standby mode function, and where the mode may persist for an indefinite time. An indicator that only shows the user that the product is in the off position is included within the clasification of an off mode.

1.17 ''Standard size'' means a clothes dryer with a drum capacity of 4.4 cubic feet or greater.

1.18 ''Standby mode'' means any product modes where the energy using product is connected to a mains power source and offers one or more of the following user-oriented or protective functions which may persist for an indefinite time:

(a) To facilitate the activation of other modes (including activation or deactivation of active mode) by remote switch (including remote control), internal sensor, or timer.

(b) Continuous functions, including information or status displays (including clocks) or sensor-based functions. A timer is a continuous clock function (which may or may not be associated with a display) that provides regular scheduled tasks (*e.g.,* switching) and that operates on a continuous basis.

1.19 ''Temperature sensing control'' means a system which monitors dryer exhaust air temperature and automatically terminates the dryer cycle.

1.20 ''Timer dryer'' means a clothes dryer that can be preset to carry out at least one operation to be terminated by a timer, but may also be manually controlled, and does not include any automatic termination function.

1.21 ''Ventless clothes dryer'' means a clothes dryer that uses a closed-loop system with an internal condenser to remove the evaporated moisture from the heated air. The moist air is not discharged from the cabinet.

2. Testing Conditions

2.1 *Installation.*

2.1.1 *All clothes dryers.* For both conventional clothes dryers and ventless clothes dryers, as defined in sections 1.8 and 1.21 of this appendix, install the clothes dryer in accordance with manufacturer's instructions as shipped with the unit. If the manufacturer's instructions do not specify the installation requirements for a certain component, it shall be tested in the as-shipped condition. Where the manufacturer gives the option to use the dryer both with and without a duct, the dryer shall be tested without the exhaust simulator described in section 3.3.5.1 of AHAM HLD–1 (incorporated by reference; see § 430.3). All external joints should be taped to avoid air leakage. For drying testing, disconnect all lights, such as task lights, that do not provide any information related to the drying process on the clothes dryer and that do not consume more than 10 watts during the clothes dryer test cycle. Control setting indicator lights showing the cycle progression, temperature or dryness settings, or other cycle functions that cannot be turned off during the test cycle shall not be disconnected during the active mode test cycle. For standby and off mode testing, the clothes dryer shall also be installed in accordance with section 5, paragraph 5.2 of IEC 62301 (Second Edition) (incorporated by reference; see § 430.3), disregarding the provisions regarding batteries and the determination, classification, and testing of relevant modes. For standby and off mode testing, all lighting systems shall remain connected.

2.1.2 *Conventional clothes dryers.* For conventional clothes dryers, as defined in section 1.8 of this appendix, the dryer exhaust shall be restricted by adding the AHAM exhaust simulator described in section 3.3.5.1 of AHAM HLD–1 (incorporated by reference; see § 430.3).

2.1.3 *Ventless clothes dryers.* For ventless clothes dryers, as defined in section 1.21, the dryer shall be tested without the AHAM exhaust simulator. If the manufacturer gives the option to use a ventless clothes dryer, with or without a condensation box, the dryer shall be tested with the condensation box installed. For ventless clothes dryers, the condenser unit of the dryer must remain in place and not be taken out of the dryer for any reason between tests.

2.2 *Ambient temperature and humidity.*

2.2.1 For drying testing, maintain the room ambient air temperature at 75 ±3 F and the room relative humidity at 50 ±10 percent relative humidity.

2.2.2 For standby and off mode testing, maintain room ambient air temperature conditions as specified in section 4, paragraph

4.2 of IEC 62301 (Second Edition) (incorporated by reference; see § 430.3).

2.3 *Energy supply*.

2.3.1 *Electrical supply*. Maintain the electrical supply at the clothes dryer terminal block within 1 percent of 120/240 or 120/208Y or 120 volts as applicable to the particular terminal block wiring system and within 1 percent of the nameplate frequency as specified by the manufacturer. If the dryer has a dual voltage conversion capability, conduct the test at the highest voltage specified by the manufacturer.

2.3.1.1 *Supply voltage waveform*. For the clothes dryer standby mode and off mode testing, maintain the electrical supply voltage waveform indicated in section 4, paragraph 4.3.2 of IEC 62301 (Second Edition) (incorporated by reference; see § 430.3). If the power measuring instrument used for testing is unable to measure and record the total harmonic content during the test measurement period, it is acceptable to measure and record the total harmonic content immediately before and after the test measurement period.

2.3.2 *Gas supply*.

2.3.2.1 *Natural gas*. Maintain the gas supply to the clothes dryer immediately ahead of all controls at a pressure of 7 to 10 inches of water column. If the clothes dryer is equipped with a gas appliance pressure regulator for which the manufacturer specifies an outlet pressure, the regulator outlet pressure shall be within ±10 percent of the value recommended by the manufacturer in the installation manual, on the nameplate sticker, or wherever the manufacturer makes such a recommendation for the basic model. The hourly Btu rating of the burner shall be maintained within ±5 percent of the rating specified by the manufacturer. If the requirement to maintain the hourly Btu rating of the burner within ±5 percent of the rating specified by the manufacturer cannot be achieved under the allowable range in gas inlet test pressure, the orifice of the gas burner should be modified as necessary to achieve the required Btu rating. The natural gas supplied should have a heating value of approximately 1,025 Btus per standard cubic foot. The actual heating value, H_n2, in Btus per standard cubic foot, for the natural gas to be used in the test shall be obtained either from measurements made by the manufacturer conducting the test using a standard continuous flow calorimeter as described in section 2.4.6 or by the purchase of bottled natural gas whose Btu rating is certified to be at least as accurate a rating as could be obtained from measurements with a standard continuous flow calorimeter as described in section 2.4.6.

2.3.2.2 *Propane gas*. Maintain the gas supply to the clothes dryer immediately ahead of all controls at a pressure of 11 to 13 inches of water column. If the clothes dryer is equipped with a gas appliance pressure regulator for which the manufacturer specifies an outlet pressure, the regulator outlet pressure shall be within ±10 percent of the value recommended by the manufacturer in the installation manual, on the nameplate sticker, or wherever the manufacturer makes such a recommendation for the basic model. The hourly Btu rating of the burner shall be maintained within ±5 percent of the rating specified by the manufacturer. If the requirement to maintain the hourly Btu rating of the burner within ±5 percent of the rating specified by the manufacturer cannot be achieved under the allowable range in gas inlet test pressure, the orifice of the gas burner should be modified as necessary to achieve the required Btu rating. The propane gas supplied should have a heating value of approximately 2,500 Btus per standard cubic foot. The actual heating value, H_p, in Btus per standard cubic foot, for the propane gas to be used in the test shall be obtained either from measurements made by the manufacturer conducting the test using a standard continuous flow calorimeter as described in section 2.4.6 or by the purchase of bottled gas whose Btu rating is certified to be at least as accurate a rating as could be obtained from measurement with a standard continuous calorimeter as described in section 2.4.6.

2.4 *Instrumentation*. Perform all test measurements using the following instruments as appropriate.

2.4.1 *Weighing scale for test cloth*. The scale shall have a range of 0 to a maximum of 60 pounds with a resolution of at least 0.2 ounces and a maximum error no greater than 0.3 percent of any measured value within the range of 3 to 15 pounds.

2.4.1.2 *Weighing scale for drum capacity measurements*. The scale should have a range of 0 to a maximum of 600 pounds with resolution of 0.50 pounds and a maximum error no greater than 0.5 percent of the measured value.

2.4.2 *Kilowatt-hour meter*. The kilowatt-hour meter shall have a resolution of 0.001 kilowatt-hours and a maximum error no greater than 0.5 percent of the measured value.

2.4.3 *Gas meter*. The gas meter shall have a resolution of 0.001 cubic feet and a maximum error no greater than 0.5 percent of the measured value.

2.4.4 *Dry and wet bulb psychrometer*. The dry and wet bulb psychrometer shall have an error no greater than ±1 °F. A relative humidity meter with a maximum error tolerance expressed in °F equivalent to the requirements for the dry and wet bulb psychrometer or with a maximum error tolerance of ±2 percent relative humidity would be acceptable for measuring the ambient humidity.

2.4.5 *Temperature*. The temperature sensor shall have an error no greater than ±1 °F.

2.4.6 *Standard Continuous Flow Calorimeter*. The calorimeter shall have an operating range of 750 to 3,500 Btu per cubic foot. The maximum error of the basic calorimeter shall be no greater than 0.2 percent of the actual heating value of the gas used in the test. The indicator readout shall have a maximum error no greater than 0.5 percent of the measured value within the operating range and a resolution of 0.2 percent of the full-scale reading of the indicator instrument.

2.4.7 *Standby mode and off mode watt meter*. The watt meter used to measure standby mode and off mode power consumption shall meet the requirements specified in section 4, paragraph 4.4 of IEC 62301 (Second Edition) (incorporated by reference; see §430.3). If the power measuring instrument used for testing is unable to measure and record the crest factor, power factor, or maximum current ratio during the test measurement period, it is acceptable to measure the crest factor, power factor, and maximum current ratio immediately before and after the test measurement period.

2.5 *Lint trap*. Clean the lint trap thoroughly before each test run.

2.6 *Test Cloths*.

2.6.1 *Energy test cloth*. The energy test cloth shall be clean and consist of the following:

(a) Pure finished bleached cloth, made with a momie or granite weave, which is a blended fabric of 50-percent cotton and 50-percent polyester and weighs within +10 percent of 5.75 ounces per square yard after test cloth preconditioning, and has 65 ends on the warp and 57 picks on the fill. The individual warp and fill yarns are a blend of 50-percent cotton and 50-percent polyester fibers.

(b) Cloth material that is 24 inches by 36 inches and has been hemmed to 22 inches by 34 inches before washing. The maximum shrinkage after five washes shall not be more than 4 percent on the length and width.

(c) The number of test runs on the same energy test cloth shall not exceed 25 runs.

2.6.2 *Energy stuffer cloths*. The energy stuffer cloths shall be made from energy test cloth material, and shall consist of pieces of material that are 12 inches by 12 inches and have been hemmed to 10 inches by 10 inches before washing. The maximum shrinkage after five washes shall not be more than 4 percent on the length and width. The number of test runs on the same energy stuffer cloth shall not exceed 25 runs after test cloth preconditioning.

2.6.3 *Test Cloth Preconditioning*.

A new test cloth load and energy stuffer cloths shall be treated as follows:

(1) Bone dry the load to a weight change of ±1 percent, or less, as prescribed in section 1.6 of this appendix.

(2) Place the test cloth load in a standard clothes washer set at the maximum water fill level. Wash the load for 10 minutes in soft water (17 parts per million hardness or less), using 60.8 grams of AHAM standard test detergent Formula 3. Wash water temperature should be maintained at 140 °F ±5 °F (60 °C ±2.7 °C). Rinse water temperature is to be controlled at 100 °F ±5 °F (37.7 °C ±2.7 °C).

(3) Rinse the load again at the same water temperature.

(4) Bone dry the load as prescribed in section 1.6 of this appendix and weigh the load.

(5) This procedure is repeated until there is a weight change of 1 percent or less.

(6) A final cycle is to be a hot water wash with no detergent, followed by two warm water rinses.

2.7 *Test loads*.

2.7.1 *Compact size dryer load*. Prepare a bone-dry test load of energy cloths that weighs 3.00 pounds ±.03 pounds. The test load can be adjusted to achieve proper weight by adding energy stuffer cloths, but no more than five stuffer cloths may be added per load. Dampen the load by agitating it in water whose temperature is 60 °F ±5 °F and consists of 0 to 17 parts per million hardness for approximately 2 minutes to saturate the fabric. Then, extract water from the wet test load by spinning the load until the moisture content of the load is between 52.5 and 57.5 percent of the bone-dry weight of the test load. Make a final mass adjustment, such that the moisture content is 57.5 percent ±0.33 percent by adding water uniformly distributed among all of the test clothes in a very fine spray using a spray bottle.

2.7.2 *Standard size dryer load*. Prepare a bone-dry test load of energy cloths that weighs 8.45 pounds ±.085 pounds. The test load can be adjusted to achieve proper weight by adding stuffer cloths, but no more than five stuffer cloths may be added per load. Dampen the load by agitating it in water whose temperature is 60 °F ±5 °F and consists of 0 to 17 parts per million hardness for approximately 2 minutes to saturate the fabric. Then, extract water from the wet test load by spinning the load until the moisture content of the load is between 52.5 and 57.5 percent of the bone-dry weight of the test load. Make a final mass adjustment, such that the moisture content is 57.5 percent ±0.33 percent by adding water uniformly distributed among all of the test clothes in a very fine spray using a spray bottle.

2.7.3 *Method of loading*. Load the energy test cloths by grasping them in the center, shaking them to hang loosely, and then dropping them in the dryer at random.

2.8 *Clothes dryer preconditioning*.

2.8.1 *Conventional clothes dryers*. For conventional clothes dryers, before any test cycle, operate the dryer without a test load in the non-heat mode for 15 minutes or until the discharge air temperature is varying less than 1 °F for 10 minutes—whichever is longer—in the test installation location with

the ambient conditions within the specified test condition tolerances of 2.2.

2.8.2 *Ventless clothes dryers.* For ventless clothes dryers, before any test cycle, the steady-state machine temperature must be equal to ambient room temperature described in 2.2.1. This may be done by leaving the machine at ambient room conditions for at least 12 hours between tests.

3. Test Procedures and Measurements

3.1 *Drum Capacity.* Measure the drum capacity by sealing all openings in the drum except the loading port with a plastic bag, and ensuring that all corners and depressions are filled and that there are no extrusions of the plastic bag through any openings in the interior of the drum. Support the dryer's rear drum surface on a platform scale to prevent deflection of the drum surface, and record the weight of the empty dryer. Fill the drum with water to a level determined by the intersection of the door plane and the loading port (*i.e.*, the uppermost edge of the drum that is in contact with the door seal). Record the temperature of the water and then the weight of the dryer with the added water and then determine the mass of the water in pounds. Add the appropriate volume to account for any space in the drum interior not measured by water fill (e.g., the space above the uppermost edge of the drum within a curved door) and subtract the appropriate volume to account for the space that is measured by water fill but cannot be used when the door is closed (e.g., space occupied by the door when closed). The drum capacity is calculated as follows:

C= w/d ±volume adjustment

C = capacity in cubic feet.

w = mass of water in pounds.

d = density of water at the measured temperature in pounds per cubic foot.

3.2 *Dryer Loading.* Load the dryer as specified in 2.7.

3.3 *Test cycle.*

3.3.1 *Timer dryers.* For timer dryers, as defined in section 1.20 of this appendix, operate the clothes dryer at the maximum temperature setting and, if equipped with a timer, at the maximum time setting. Any other optional cycle settings that do not affect the temperature or time settings shall be tested in the as-shipped position. If the clothes dryer does not have a separate temperature setting selection on the control panel, the maximum time setting should be used for the drying test cycle. Dry the load until the moisture content of the test load is between 1 and 2.5 percent of the bone-dry weight of the test load, at which point the test cycle is stopped, but do not permit the dryer to advance into cool down. If required, reset the timer to increase the length of the drying cycle. After stopping the test cycle, remove and weigh the test load. The clothes dryer shall not be stopped intermittently in the middle of the test cycle for any reason. Record the data specified by section 3.4 of this appendix. If the dryer automatically stops during a cycle because the condensation box is full of water, the test is stopped, and the test run is invalid, in which case the condensation box shall be emptied and the test re-run from the beginning. For ventless dryers, as defined in section 1.21 of this appendix, during the time between two cycles, the door of the dryer shall be closed except for loading (and unloading).

3.3.2 *Automatic termination control dryers.* For automatic termination control dryers, as defined in section 1.5 of this appendix, a ''normal'' program shall be selected for the test cycle. For dryers that do not have a ''normal'' program, the cycle recommended by the manufacturer for drying cotton or linen clothes shall be selected. Where the drying temperature setting can be chosen independently of the program, it shall be set to the maximum. Where the dryness level setting can be chosen independently of the program, it shall be set to the ''normal'' or ''medium'' dryness level setting. If such designation is not provided, then the dryness level shall be set at the mid-point between the minimum and maximum settings. Any other optional cycle settings that do not affect the program, temperature or dryness settings shall be tested in the as-shipped position. Operate the clothes dryer until the completion of the programmed cycle, including the cool down period. The cycle shall be considered complete when the dryer indicates to the user that the cycle has finished (by means of a display, indicator light, audible signal, or other signal) and the heater and drum/fan motor shuts off for the final time. If the clothes dryer is equipped with a wrinkle prevention mode (*i.e.*, that continuously or intermittently tumbles the clothes dryer drum after the clothes dryer indicates to the user that the cycle has finished) that is activated by default in the as-shipped position or if manufacturers' instructions specify that the feature is recommended to be activated for normal use, the cycle shall be considered complete after the end of the wrinkle prevention mode. After the completion of the test cycle, remove and weigh the test load. Record the data specified in section 3.4 of this appendix. If the final moisture content is greater than 2 percent, the test shall be invalid and a new run shall be conducted using the highest dryness level setting. If the dryer automatically stops during a cycle because the condensation box is full of water, the test is stopped, and the test run is invalid, in which case the condensation box shall be emptied and the test re-run from the beginning. For ventless dryers, during the time between two cycles, the door of the dryer shall be closed except for loading (and unloading).

3.4 *Data recording*. Record for each test cycle:

3.4.1 Bone-dry weight of the test load described in 2.7.

3.4.2 Moisture content of the wet test load before the test, as described in 2.7.

3.4.3 Moisture content of the dry test load obtained after the test described in 3.3.

3.4.4 Test room conditions, temperature, and percent relative humidity described in 2.2.1.

3.4.5 For electric dryers—the total kilowatt-hours of electric energy, E_t, consumed during the test described in 3.3.

3.4.6 For gas dryers:

3.4.6.1 Total kilowatt-hours of electrical energy, E_{te}, consumed during the test described in 3.3.

3.4.6.2 Cubic feet of gas per cycle, E_{tg}, consumed during the test described in 3.3.

3.4.6.3 Correct the gas heating value, GEF, as measured in 2.3.2.1 and 2.3.2.2, to standard pressure and temperature conditions in accordance with U.S. Bureau of Standards, circular C417, 1938.

3.4.7 The cycle settings selected, in accordance with section 3.3.2 of this appendix, for the automatic termination control dryer test.

3.5 *Test for automatic termination field use factor*. The field use factor for automatic termination can be claimed for those dryers which meet the requirements for automatic termination control, defined in 1.4.

3.6 *Standby mode and off mode power*. Establish the testing conditions set forth in Section 2 ''Testing Conditions'' of this appendix. For clothes dryers that take some time to enter a stable state from a higher power state as discussed in Section 5, Paragraph 5.1, Note 1 of IEC 62301 (Second Edition) (incorporated by reference; see §430.3), allow sufficient time for the clothes dryer to reach the lower power state before proceeding with the test measurement. Follow the test procedure specified in section 5, paragraph 5.3.2 of IEC 62301 (Second Edition) for testing in each possible mode as described in sections 3.6.1 and 3.6.2 of this appendix.

3.6.1 If a clothes dryer has an inactive mode, as defined in section 1.13 of this appendix, measure and record the average inactive mode power of the clothes dryer, P_{IA}, in watts.

3.6.2 If a clothes dryer has an off mode, as defined in section 1.16 of this appendix, measure and record the average off mode power of the clothes dryer, P_{OFF}, in watts.

4. Calculation of Derived Results From Test Measurements

4.1 *Total per-cycle electric dryer energy consumption*. Calculate the total electric dryer energy consumption per cycle, E_{ce}, expressed in kilowatt-hours per cycle and defined as:

$E_{ce} = E_t$,

for automatic termination control dryers, and,

$E_{ce} = [55.5/(W_w - W_d)] \times E_t \times$ field use,

for timer dryers

Where:

55.5 = an experimentally established value for the percent reduction in the moisture content of the test load during a laboratory test cycle expressed as a percent.

E_t = the energy recorded in section 3.4.5 of this appendix

field use = 1.18, the field use factor for clothes dryers with time termination control systems only without any automatic termination control functions.

W_w = the moisture content of the wet test load as recorded in section 3.4.2 of this appendix.

W_d = the moisture content of the dry test load as recorded in section 3.4.3 of this appendix.

4.2 *Per-cycle gas dryer electrical energy consumption*. Calculate the gas dryer electrical energy consumption per cycle, E_{ge}, expressed in kilowatt-hours per cycle and defined as:

$E_{ge} = E_{te}$,

for automatic termination control dryers, and,

$E_{ge} = [55.5/(W_w - W_d)] \times E_{te} \times$ field use,

for timer dryers

Where:

E_{te} = the energy recorded in section 3.4.6.1 of this appendix.

field use, 55.5, W_w, W_d as defined in section 4.1 of this appendix.

4.3 *Per-cycle gas dryer gas energy consumption*. Calculate the gas dryer gas energy consumption per cycle, E_{ge}, expressed in Btus per cycle and defined as:

$E_{gg} = E_{tg} \times GEF$

for automatic termination control dryers, and,

$E_{gg} = [55.5/(W_w - W_d)] \times E_{tg} \times$ field use $\times$ GEF

for timer dryers

Where:

E_{tg} = the energy recorded in section 3.4.6.2 of this appendix.

GEF = corrected gas heat value (Btu per cubic foot) as defined in section 3.4.6.3 of this appendix,

field use, 55.5, W_w, W_d as defined in section 4.1 of this appendix.

4.4 *Total per-cycle gas dryer energy consumption expressed in kilowatt-hours*. Calculate the total gas dryer energy consumption per cycle, E_{cg}, expressed in kilowatt-hours per cycle and defined as:

$E_{cg} = E_{ge} + (E_{gg}/3412 \text{ Btu/kWh})$

Where:

E_{ge} = the energy calculated in section 4.2 of this appendix

E_{gg} = the energy calculated in section 4.3 of this appendix

4.5 *Per-cycle standby mode and off mode energy consumption*. Calculate the dryer inactive mode and off mode energy consumption per cycle, E_{TSO}, expressed in kWh per cycle and defined as:

$E_{TSO} = [(P_{IA} \times S_{IA}) + (P_{OFF} \times S_{OFF})] \times K/283$

Where:

P_{IA} = dryer inactive mode power, in watts, as measured in section 3.6.1;

P_{OFF} = dryer off mode power, in watts, as measured in section 3.6.2.

If the clothes dryer has both inactive mode and off mode, S_{IA} and S_{OFF} both equal 8,620 ÷ 2 = 4,310, where 8,620 is the total inactive and off mode annual hours;

If the clothes dryer has an inactive mode but no off mode, the inactive mode annual hours, S_{IA}, is equal to 8,620 and the off mode annual hours, S_{OFF}, is equal to 0;

If the clothes dryer has an off mode but no inactive mode, S_{IA} is equal to 0 and S_{OFF} is equal to 8,620

Where:

K = 0.001 kWh/Wh conversion factor for watt-hours to kilowatt-hours; and

283 = representative average number of clothes dryer cycles in a year.

4.6 *Per-cycle combined total energy consumption expressed in kilowatt-hours*. Calculate the per-cycle combined total energy consumption, E_{CC}, expressed in kilowatt-hours per cycle and defined for an electric clothes dryer as:

$E_{CC} = E_{ce} + E_{TSO}$

Where:

E_{ce} = the energy calculated in section 4.1 of this appendix, and

E_{TSO} = the energy calculated in section 4.5 of this appendix, and defined for a gas clothes dryer as:

$E_{CC} = E_{cg} + E_{TSO}$

Where:

E_{cg} = the energy calculated in section 4.4 of this appendix, and

E_{TSO} = the energy calculated in section 4.5 of this appendix.

4.7 *Energy Factor in pounds per kilowatt-hour*. Calculate the energy factor, EF, expressed in pounds per kilowatt-hour and defined for an electric clothes dryer as:

$EF = W_{bonedry}/E_{ce}$

Where:

$W_{bonedry}$ = the bone dry test load weight recorded in section 3.4.1 of this appendix, and

E_{ce} = the energy calculated in section 4.1 of this appendix, and and defined for a gas clothes dryer as:

$EF = W_{bonedry}/E_{cg}$

Where:

$W_{bonedry}$ = the bone dry test load weight recorded in section 3.4.1 of this appendix, and

E_{cg} = the energy calculated in section 4.4 of this appendix,

4.8 *Combined Energy Factor in pounds per kilowatt-hour*. Calculate the combined energy factor, CEF, expressed in pounds per kilowatt-hour and defined as:

$CEF = W_{bonedry}/E_{CC}$

Where:

$W_{bonedry}$ = the bone dry test load weight recorded in section 3.4.1 of this appendix, and

E_{CC} = the energy calculated in section 4.6 of this appendix.

[78 FR 49647, Aug. 14, 2013]

APPENDIX E TO SUBPART B OF PART 430—UNIFORM TEST METHOD FOR MEASURING THE ENERGY CONSUMPTION OF WATER HEATERS

1. Definitions

1.1 *Cut-in* means the time when or water temperature at which a water heater control or thermostat acts to increase the energy or fuel input to the heating elements, compressor, or burner.

1.2 *Cut-out* means the time when or water temperature at which a water heater control or thermostat acts to reduce to a minimum the energy or fuel input to the heating elements, compressor, or burner.

1.3 *Design Power Rating* means the nominal power rating that a water heater manufacturer assigns to a particular design of water heater, expressed in kilowatts or Btu (kJ) per hour as appropriate.

1.4 *Energy Factor* means a measure of water heater overall efficiency.

1.5 *First-Hour Rating* means an estimate of the maximum volume of ''hot'' water that a storage-type water heater can supply within an hour that begins with the water heater fully heated (i.e., with all thermostats satisfied). It is a function of both the storage volume and the recovery rate.

1.6 *Heat Trap* means a device which can be integrally connected or independently attached to the hot and/or cold water pipe connections of a water heater such that the device will develop a thermal or mechanical seal to minimize the recirculation of water due to thermal convection between the water heater tank and its connecting pipes.

1.7 *Instantaneous Water Heaters*

1.7.1 *Electric Instantaneous Water Heater* Reserved.

1.7.2 *Gas Instantaneous Water Heater* means a water heater that uses gas as the energy source, initiates heating based on sensing water flow, is designed to deliver water at a controlled temperature of less than 180 °F (82 °C), has an input greater than 50,000 Btu/h (53 MJ/h) but less than 200,000 Btu/h (210 MJ/h), and has a manufacturer's specified storage capacity of less than 2 gallons (7.6 liters).

The unit may use a fixed or variable burner input.

1.8 *Maximum gpm (L/min) Rating* means the maximum gallons per minute (liters per minute) of hot water that can be supplied by an instantaneous water heater while maintaining a nominal temperature rise of 77 °F (42.8 °C) during steady state operation.

1.9 *Rated Storage Volume* means the water storage capacity of a water heater, in gallons (liters), as specified by the manufacturer.

1.10 *Recovery Efficiency* means the ratio of energy delivered to the water to the energy content of the fuel consumed by the water heater.

1.11 *Standby* means the time during which water is not being withdrawn from the water heater. There are two standby time intervals used within this test procedure: $\tau_{stby,1}$ represents the elapsed time between the time at which the maximum mean tank temperature is observed after the sixth draw and subsequent recovery and the end of the 24-hour test; $\tau_{stby,2}$ represents the total time during the 24-hour simulated use test when water is not being withdrawn from the water heater.

1.12 *Storage-type Water Heaters*

1.12.1 *Electric Storage-type Water Heater* means a water heater that uses electricity as the energy source, is designed to heat and store water at a thermostatically controlled temperature of less than 180 °F (82 °C), has a nominal input of 12 kilowatts (40,956 Btu/h) or less, and has a rated storage capacity of not less than 20 gallons (76 liters) nor more than 120 gallons (450 liters).

1.12.2 *Gas Storage-type Water Heater* means a water heater that uses gas as the energy source, is designed to heat and store water at a thermostatically controlled temperature of less than 180 °F (82 °C), has a nominal input of 75,000 Btu (79 MJ) per hour or less, and has a rated storage capacity of not less than 20 gallons (76 liters) nor more than 100 gallons (380 liters).

1.12.3 *Heat Pump Water Heater* means a water heater that uses electricity as the energy source, is designed to heat and store water at a thermostatically controlled temperature of less than 180 °F (82 °C), has a maximum current rating of 24 amperes (including the compressor and all auxiliary equipment such as fans, pumps, controls, and, if on the same circuit, any resistive elements) for an input voltage of 250 volts or less, and, if the tank is supplied, has a manufacturer's rated storage capacity of 120 gallons (450 liters) or less. Resistive elements used to provide supplemental heating may use the same circuit as the compressor if (1) an interlocking mechanism prevents concurrent compressor operation and resistive heating or (2) concurrent operation does not result in the maximum current rating of 24 amperes being exceeded. Otherwise, the resistive elements and the heat pump components must use separate circuits. A heat pump water heater may be sold by the manufacturer with or without a storage tank.

a. Heat Pump Water Heater with Storage Tank means an air-to-water heat pump sold by the manufacturer with an insulated storage tank as a packaged unit. The tank and heat pump can be an integral unit or they can be separated.

b. Heat Pump Water Heater without Storage Tank (also called Add-on Heat Pump Water Heater) means an air-to-water heat pump designed for use with a storage-type water heater or a storage tank that is not specified or supplied by the manufacturer.

1.12.4 *Oil Storage-type Water Heater* means a water heater that uses oil as the energy source, is designed to heat and store water at a thermostatically controlled temperature of less than 180 °F (82 °C), has a nominal energy input of 105,000 Btu/h (110 MJ/h) or less, and has a manufacturer's rated storage capacity of 50 gallons (190 liters) or less.

1.12.5 *Storage-type Water Heater of More than 2 Gallons (7.6 Liters) and Less than 20 Gallons (76 Liters)*. Reserved.

1.13 *ASHRAE Standard 41.1–86* means the standard published in 1986 by the American Society of Heating, Refrigerating and Air-Conditioning Engineers, Inc., and titled Standard Measurement Guide: Section on Temperature Measurements.

1.14 *ASTM–D–2156–80* means the test standard published in 1980 by the American Society for Testing and Measurements and titled ''Smoke Density in Flue Gases from Burning Distillate Fuels, Test Method for''.

1.15 *Symbol Usage* The following identity relationships are provided to help clarify the symbology used throughout this procedure:

C_p specific heat capacity of water

E_{annual} annual energy consumption of a water heater

E_f energy factor of a water heater

F_{hr} first-hour rating of a storage-type water heater

F_{max} maximum gpm (L/min) rating of an instantaneous water heater rated at a temperature rise of 77 °F (42.8 °C) across the heater

i a subscript to indicate an ith draw during a test

M_i mass of water removed during the ith draw (i=1 to 6) of the 24-hr simulated use test

M^*_i for storage-type water heaters, mass of water removed during the ith draw (i=1 to n) during the first-hour rating test

M_{10m} for instantaneous water heaters, mass of water removed continuously during a 10-minute interval in the maximum gpm (L/min) rating test

n for storage-type water heaters, total number of draws during the first-hour rating test

Q total fossil fuel and/or electric energy consumed during the entire 24-hr simulated use test

Q_d daily water heating energy consumption adjusted for net change in internal energy

Q_{da} adjusted daily water heating energy consumption with adjustment for variation of tank to ambient air temperature difference from nominal value

Q_{dm} overall adjusted daily water heating energy consumption including Q_{da} and Q_{HWD}

Q_{hr} hourly standby losses

Q_{HW} daily energy consumption to heat water over the measured average temperature rise across the water heater

Q_{HWD} adjustment to daily energy consumption, Q_{hw}, due to variation of the temperature rise across the water heater not equal to the nominal value of 77 °F (42.8 °C)

Q_r energy consumption of fossil fuel or heat pump water heaters between thermostat (or burner) cut-out prior to the first draw and cut-out following the first draw of the 24-hr simulated use test

$Q_{r,\ max}$ energy consumption of a modulating instantaneous water heater between cut-out (burner) prior to the first draw and cut-out following the first draw of the 24-hr simulated use test

$Q_{r,\ min}$ energy consumption of a modulating instantaneous water heater from immediately prior to the fourth draw to burner cut-out following the fourth draw of the 24-hr simulated use test

Q_{stby} total energy consumed by the water heater during the standby time interval $\tau_{stby,\ 1}$

Q_{su} total fossil fueled and/or electric energy consumed from the beginning of the first draw to the thermostat (or burner) cut-out following the completion of the sixth draw during the 24-hr simulated use test

T_{min} for modulating instantaneous water heaters, steady state outlet water temperature at the minimum fuel input rate

$\bar{T}_0$ mean tank temperature at the beginning of the 24-hr simulated use test

$\bar{T}_{24}$ mean tank temperature at the end of the 24-hr simulated use test

$\bar{T}_{a,\ stby}$ average ambient air temperature during standby periods of the 24-hr use test

$\bar{T}_{del}$ for instantaneous water heaters, average outlet water temperature during a 10-minute continuous draw interval in the maximum gpm (L/min) rating test

$\bar{T}_{del,\ i}$ average outlet water temperature during the *i*th draw of the 24-hr simulated use test

$\bar{T}_{in}$ for instantaneous water heaters, average inlet water temperature during a 10-minute continuous draw interval in the maximum gpm (L/min) rating test

$\bar{T}_{in,\ i}$ average inlet water temperature during the *i*th draw of the 24-hr simulated use test

$\bar{T}_{max,\ 1}$ maximum measured mean tank temperature after cut-out following the first draw of the 24-hr simulated use test

$\bar{T}_{stby}$ average storage tank temperature during the standby period $\tau_{stby,\ 2}$ of the 24-hr use test

$\bar{T}_{su}$ maximum measured mean tank temperature after cut-out following the sixth draw of the 24-hr simulated use test

$\bar{T}_{t,\ stby}$ average storage tank temperature during the standby period τ_{stby}, 1 of the 24-hr use test

$\bar{T}^*_{del,\ i}$ for storage-type water heaters, average outlet water temperature during the *i*th draw (i=1 to n) of the first-hour rating test

$T^*_{max,\ i}$ for storage-type water heaters, maximum outlet water temperature observed during the *i*th draw (i=1 to n) of the first-hour rating test

$T^*_{min,\ i}$ for storage-type water heaters, minimum outlet water temperature to terminate the *i*th draw during the first-hour rating test

UA standby loss coefficient of a storage-type water heater

V_i volume of water removed during the *i*th draw (i=1 to 6) of the 24-hr simulated use test

V^*_i volume of water removed during the *i*th draw (i=1 to n) during the first-hour rating test

V_{10m} for instantaneous water heaters, volume of water removed continuously during a 10-minute interval in the maximum gpm (L/min) rating test

V_{max} steady state water flow rate of an instantaneous water heater at the rated input to give a discharge temperature of 135 °F ±5 °F (57.2 °C ±2.8 °C)

V_{min} steady state water flow rate of a modulating instantaneous water heater at the minimum input to give a discharge temperature of T_{min} up to 135 °F ±5 °F (57.2 °C ±2.8 °C)

V_{st} measured storage volume of the storage tank

W_f weight of storage tank when completely filled with water

W_t tare weight of storage tank when completely empty of water

^n_r recovery efficiency

^{p} density of water

$\tau_{stby,\ 1}$ elapsed time between the time the maximum mean tank temperature is observed after the sixth draw and the end of the 24-hr simulated use test

$\tau_{stby,\ 2}$ overall standby periods when no water is withdrawn during the 24-hr simulated use test

1.16 *Tabletop water heater* means a water heater in a rectangular box enclosure designed to slide into a kitchen countertop space with typical dimensions of 36 inches high, 25 inches deep and 24 inches wide.

2. Test Conditions

2.1 *Installation Requirements.* Tests shall be performed with the water heater and instrumentation installed in accordance with Section 4 of this appendix.

2.2 *Ambient Air Temperature.* The ambient air temperature shall be maintained between

65.0 °F and 70.0 °F (18.3 °C and 21.1 °C) on a continuous basis. For heat pump water heaters, the dry bulb temperature shall be maintained at 67.5 °F ±1 °F (19.7 °C ±0.6 °C) and, in addition, the relative humidity shall be maintained between 49% and 51%.

2.3 *Supply Water Temperature*. The temperature of the water being supplied to the water heater shall be maintained at 58 °F ±2 °F (14.4 °C ±1.1 °C) throughout the test.

2.4 *Storage Tank Temperature*. The average temperature of the water within the storage tank shall be set to 135 °F ±5 °F (57.2 °C ±2.8 °C).

2.5 *Supply Water Pressure*. During the test when water is not being withdrawn, the supply pressure shall be maintained between 40 psig (275 kPa) and the maximum allowable pressure specified by the water heater manufacturer.

2.6 *Electrical and/or Fossil Fuel Supply*.

2.6.1 *Electrical*. Maintain the electrical supply voltage to within ±1% of the center of the voltage range specified by the water heater and/or heat pump manufacturer.

2.6.2 *Natural Gas*. Maintain the supply pressure in accordance with the manufacturer's specifications. If the supply pressure is not specified, maintain a supply pressure of 7–10 inches of water column (1.7–2.5 kPa). If the water heater is equipped with a gas appliance pressure regulator, the regulator outlet pressure shall be within ±10% of the manufacturer's specified manifold pressure. For all tests, use natural gas having a heating value of approximately 1,025 Btu per standard cubic foot (38,190 kJ per standard cubic meter).

2.6.3 *Propane Gas*. Maintain the supply pressure in accordance with the manufacturer's specifications. If the supply pressure is not specified, maintain a supply pressure of 11–13 inches of water column (2.7–3.2 kPa). If the water heater is equipped with a gas appliance pressure regulator, the regulator outlet pressure shall be within ±10% of the manufacturer's specified manifold pressure. For all tests, use propane gas with a heating value of approximately 2,500 Btu per standard cubic foot (93,147 kJ per standard cubic meter).

2.6.4 *Fuel Oil Supply*. Maintain an uninterrupted supply of fuel oil. Use fuel oil having a heating value of approximately 138,700 Btu per gallon (38,660 kJ per liter).

3. Instrumentation

3.1 *Pressure Measurements*. Pressure-measuring instruments shall have an error no greater than the following values:

Item measured	Instrument accuracy	Instrument precision
Gas pressure	±0.1 inch of water column (±0.025 kPa)	±0.05 inch of water column (±0.012 kPa).
Atmospheric pressure	±0.1 inch of mercury column (±0.34 kPa)	±0.05 inch of mercury column (±0.17 kPa).
Water pressure	±1.0 pounds per square inch (±6.9 kPa)	±0.50 pounds per square inch (±3.45 kPa).

3.2 *Temperature Measurement*

3.2.1 *Measurement*. Temperature measurements shall be made in accordance with the Standard Measurement Guide: Section on Temperature Measurements, ASHRAE Standard 41.1–86.

3.2.2 *Accuracy and Precision*. The accuracy and precision of the instruments, including their associated readout devices, shall be within the following limits:

Item measured	Instrument accuracy	Instrument precision
Air dry bulb temperature	±0.2 °F (±0.1 °C)	±0.1 °F (±0.06 °C)
Air wet bulb temperature	±0.2 °F (±0.1 °C)	±0.1 °F (±0.06 °C)
Inlet and outlet water temperatures	±0.2 °F (±0.1 °C)	±0.1 °F (±0.06 °C)
Storage tank temperatures	±0.5 °F (±0.3 °C)	±0.25 °F (±0.14 °C)

3.2.3 *Scale Division*. In no case shall the smallest scale division of the instrument or instrument system exceed 2 times the specified precision.

3.2.4 *Temperature Difference*. Temperature difference between the entering and leaving water may be measured with any of the following:

a. A thermopile
b. Calibrated resistance thermometers
c. Precision thermometers
d. Calibrated thermistors
e. Calibrated thermocouples
f. Quartz thermometers

3.2.5 *Thermopile Construction*. If a thermopile is used, it shall be made from calibrated thermocouple wire taken from a single spool. Extension wires to the recording device shall also be made from that same spool.

3.2.6 *Time Constant*. The time constant of the instruments used to measure the inlet and outlet water temperatures shall be no greater than 5 seconds.

3.3 *Liquid Flow Rate Measurement*. The accuracy of the liquid flow rate measurement, using the calibration if furnished, shall be

equal to or less than ±1% of the measured value in mass units per unit time.

3.4 *Electric Energy*. The electrical energy used shall be measured with an instrument and associated readout device that is accurate within ±1% of the reading.

3.5 *Fossil Fuels*. The quantity of fuel used by the water heater shall be measured with an instrument and associated readout device that is accurate within ±1% of the reading.

3.6 *Mass Measurements*. For mass measurements greater than or equal to 10 pounds (4.5 kg), a scale that is accurate within ±1% of the reading shall be used to make the measurement. For mass measurements less than 10 pounds (4.5 kg), the scale shall provide a measurement that is accurate within ±0.1 pound (0.045 kg).

3.7 *Heating Value*. The higher heating value of the natural gas, propane, or fuel oil shall be measured with an instrument and associated readout device that is accurate within ±1% of the reading. The heating value of natural gas and propane must be corrected for local temperature and pressure conditions.

3.8 *Time*. The elapsed time measurements shall be measured with an instrument that is accurate within ±0.5 seconds per hour.

3.9 *Volume*. Volume measurements shall be measured with an accuracy of ±2% of the total volume.

4. Installation

4.1 *Water Heater Mounting*. A water heater designed to be freestanding shall be placed on a ¾ inch (2 cm) thick plywood platform supported by three 2 × 4 inch (5 cm × 10 cm) runners. If the water heater is not approved for installation on combustible flooring, suitable non-combustible material shall be placed between the water heater and the platform. Counter-top water heaters shall be placed against a simulated wall section. Wall-mounted water heaters shall be supported on a simulated wall in accordance with the manufacturer-published installation instructions. When a simulated wall is used, the recommended construction is 2 × 4 inch (5 cm × 10 cm) studs, faced with ¾ inch (2 cm) plywood. For heat pump water heaters that are supplied with a storage tank, the two components, if not delivered as a single package, shall be connected in accordance with the manufacturer-published installation instructions and the overall system shall be placed on the above-described plywood platform. If installation instructions are not provided by the heat pump manufacturer, uninsulated 8 foot (2.4 m) long connecting hoses having an inside diameter of ⅝ inch (1.6 cm) shall be used to connect the storage tank and the heat pump water heater. With the exception of using the storage tank described in 4.10, the same requirements shall apply for heat pump water heaters that are supplied without a storage tank from the manufacturer. The testing of the water heater shall occur in an area that is protected from drafts.

4.2 *Water Supply*. Connect the water heater to a water supply capable of delivering water at conditions as specified in Sections 2.3 and 2.5 of this appendix.

4.3 *Water Inlet and Outlet Configuration*. For freestanding water heaters that are taller than 36 inches (91.4 cm), inlet and outlet piping connections shall be configured in a manner consistent with Figures 1 and 2. Inlet and outlet piping connections for wall-mounted water heaters shall be consistent with Figure 3. For freestanding water heaters that are 36 inches or less in height and not supplied as part of a counter-top enclosure (commonly referred to as an under-the-counter model), inlet and outlet piping shall be installed in a manner consistent with Figures 4, 5, and 6. For water heaters that are supplied with a counter-top enclosure, inlet and outlet piping shall be made in a manner consistent with Figures 7A and 7B, respectively. The vertical piping noted in Figures 7A and 7B shall be located (whether inside the enclosure or along the outside in a recessed channel) in accordance with the manufacturer-published installation instructions.

All dimensions noted in Figures 1 through 7 shall be achieved. All piping between the water heater and the inlet and outlet temperature sensors, noted as T_{IN} and T_{OUT} in the figures, shall be Type ''L'' hard copper having the same diameter as the connections on the water heater. Unions may be used to facilitate installation and removal of the piping arrangements. A pressure gauge and diaphragm expansion tank shall be installed in the supply water piping at a location upstream of the inlet temperature sensor. An appropriately rated pressure and temperature relief valve shall be installed on all water heaters at the port specified by the manufacturer. Discharge piping for the relief valve shall be non-metallic. If heat traps, piping insulation, or pressure relief valve insulation are supplied with the water heater, they shall be installed for testing. Except when using a simulated wall, clearance shall be provided such that none of the piping contacts other surfaces in the test room.

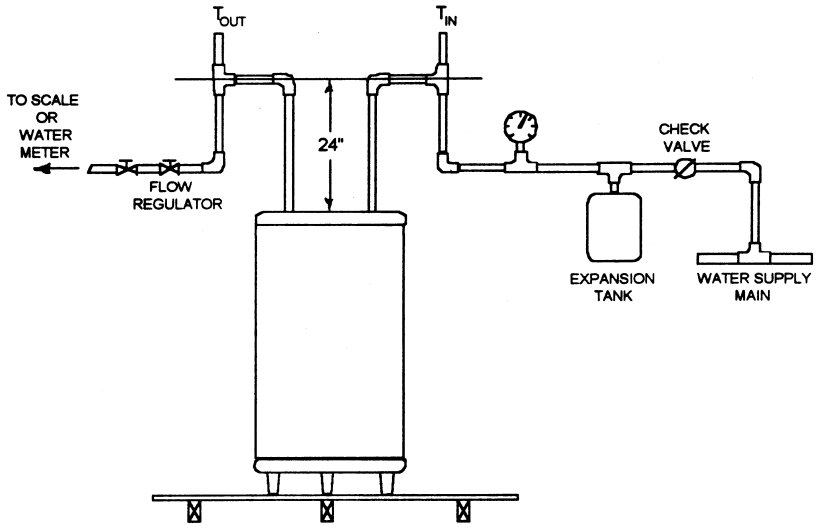

Figure 1.

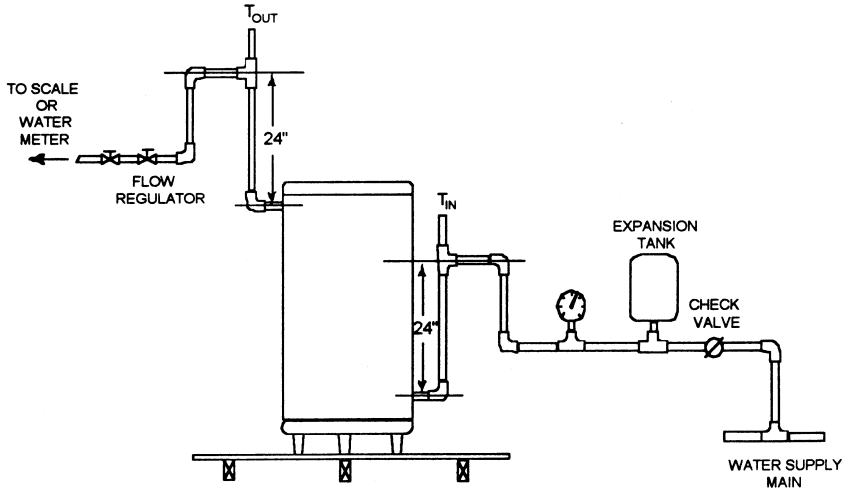

Figure 2.

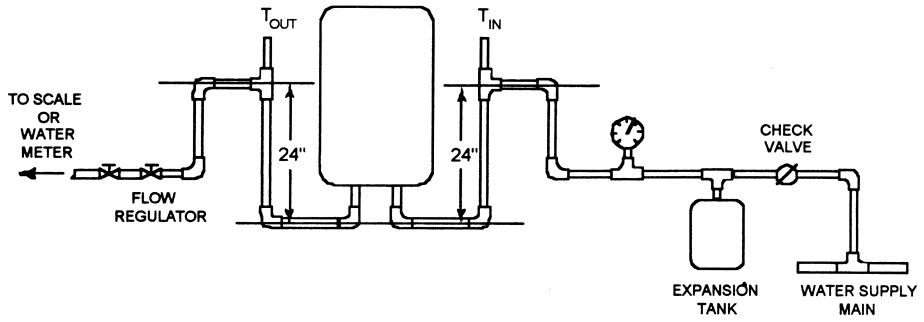

Figure 3.

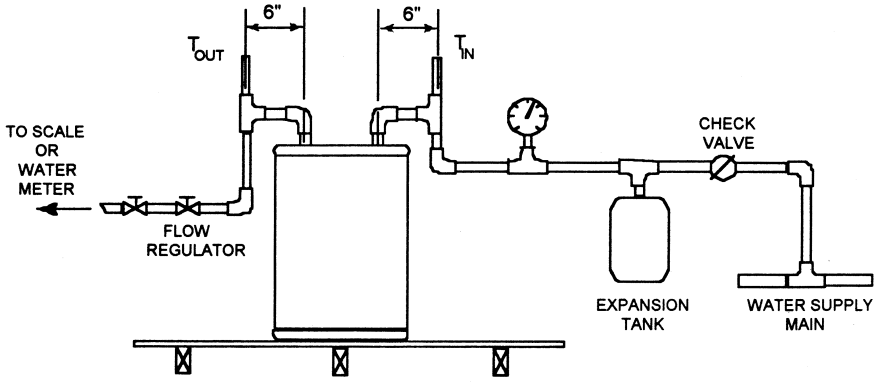

Figure 4.

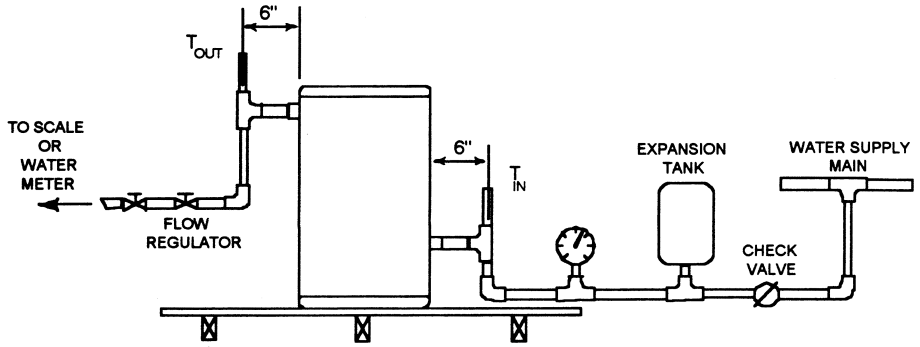

Figure 5.

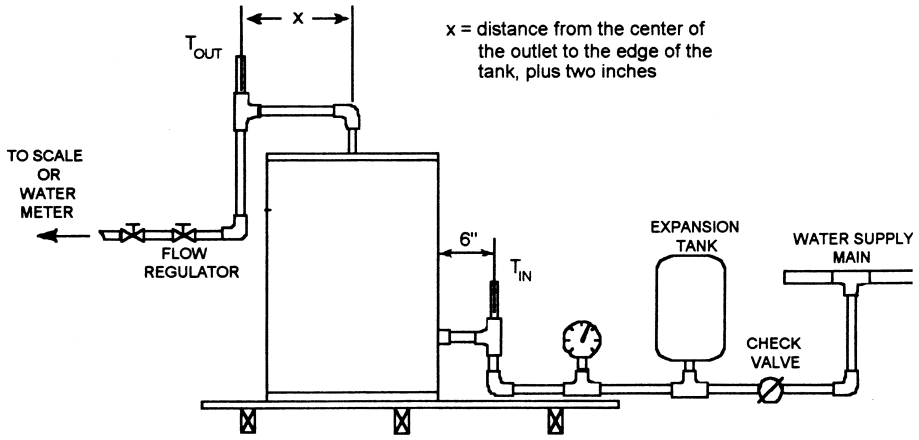

Figure 6.

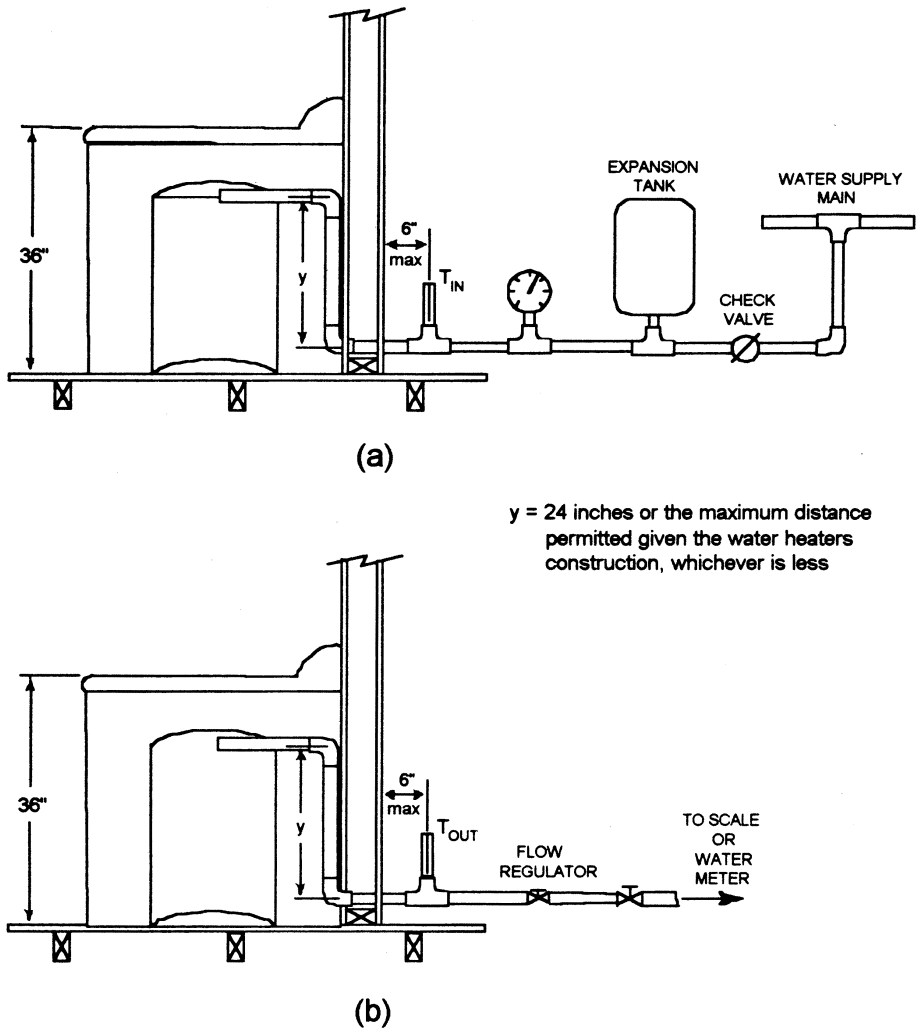

Figure 7.

4.4 *Fuel and/or Electrical Power and Energy Consumption.* Install one or more instruments which measure, as appropriate, the quantity and rate of electrical energy and/or fossil fuel consumption in accordance with Section 3. For heat pump water heaters that use supplemental resistive heating, the electrical energy supplied to the resistive element(s) shall be metered separately from the electrical energy supplied to the entire appliance or to the remaining components (e.g., compressor, fans, pumps, controls).

4.5 *Internal Storage Tank Temperature Measurements.* Install six temperature measurement sensors inside the water heater tank with a vertical distance of at least 4 inches (100 mm) between successive sensors. A temperature sensor shall be positioned at the vertical midpoint of each of the six equal

volume nodes within the tank. Nodes designate the equal volumes used to evenly partition the total volume of the tank. As much as is possible, the temperature sensor should be positioned away from any heating elements, anodic protective devices, tank walls, and flue pipe walls. If the tank cannot accommodate six temperature sensors and meet the installation requirements specified above, install the maximum number of sensors which comply with the installation requirements. The temperature sensors shall be installed either through (1) the anodic device opening; (2) the relief valve opening; or (3) the hot water outlet. If installed through the relief valve opening or the hot water outlet, a tee fitting or outlet piping, as applicable, shall be installed as close as possible to its original location. If the relief valve temperature sensor is relocated, and it no longer extends into the top of the tank, a substitute relief valve that has a sensing element that can reach into the tank shall be installed. If the hot water outlet includes a heat trap, the heat trap shall be installed on top of the tee fitting. Added fittings shall be covered with thermal insulation having an R value between 4 and 8 h/ft^{2+} °F/Btu (0.7 and 1.4 m^{2+} °C/W).

4.6 *Ambient Air Temperature Measurement.* Install an ambient air temperature sensor at the vertical mid-point of the water heater and approximately 2 feet (610 mm) from the surface of the water heater. The sensor shall be shielded against radiation.

4.7 *Inlet and Outlet Water Temperature Measurements.* Install temperature sensors in the cold-water inlet pipe and hot-water outlet pipe as shown in Figures 1, 2, 3, 4, 5, 6, 7a and 7b, as applicable.

4.8 *Flow Control.* A valve shall be installed to provide flow as specified in sections 5.1.4.1 for storage tank water heaters and 5.2.1 for instantaneous water heaters.

4.9 *Flue Requirements.*

4.9.1 *Gas-Fired Water Heaters.* Establish a natural draft in the following manner. For gas-fired water heaters with a vertically discharging draft hood outlet, a 5-foot (1.5-meter) vertical vent pipe extension with a diameter equal to the largest flue collar size of the draft hood shall be connected to the draft hood outlet. For gas-fired water heaters with a horizontally discharging draft hood outlet, a 90-degree elbow with a diameter equal to the largest flue collar size of the draft hood shall be connected to the draft hood outlet. A 5-foot (1.5-meter) length of vent pipe shall be connected to the elbow and oriented to discharge vertically upward. Direct vent gas-fired water heaters shall be installed with venting equipment specified in the manufacturer's instructions using the minimum vertical and horizontal lengths of vent pipe recommended by the manufacturer.

4.9.2 *Oil-Fired Water Heaters.* Establish a draft at the flue collar at the value specified in the manufacturer's instructions. Establish the draft by using a sufficient length of vent pipe connected to the water heater flue outlet, and directed vertically upward. For an oil-fired water heater with a horizontally discharging draft hood outlet, a 90-degree elbow with a diameter equal to the largest flue collar size of the draft hood shall be connected to the draft hood outlet. A length of vent pipe sufficient to establish the draft shall be connected to the elbow fitting and oriented to discharge vertically upward. Direct-vent oil-fired water heaters should be installed with venting equipment as specified in the manufacturer's instructions, using the minimum vertical and horizontal lengths of vent pipe recommended by the manufacturer.

4.10 *Heat Pump Water Heater Storage Tank.* The tank to be used for testing a heat pump water heater without a tank supplied by the manufacturer (see Section 1.12.3b) shall be an electric storage-type water heater having a measured volume of 47.0 gallons ±1.0 gallon (178 liters ±3.8 liters); two 4.5 kW heating elements controlled in such a manner as to prevent both elements from operating simultaneously; and an energy factor greater than or equal to the minimum energy conservation standard (as determined in accordance with Section 6.1.7) and less than or equal to the sum of the minimum energy conservation standard and 0.02.

5. Test Procedures

5.1 *Storage-type Water Heaters, Including Heat Pump Water Heaters.*

5.1.1 *Determination of Storage Tank Volume.* Determine the storage capacity, V_{st}, of the water heater under test, in gallons (liters), by subtracting the tare weight—measured while the tank is empty—from the gross weight of the storage tank when completely filled with water (with all air eliminated and line pressure applied as described in section 2.5) and dividing the resulting net weight by the density of water at the measured temperature.

5.1.2 *Setting the Thermostat.*

5.1.2.1 *Single Thermostat Tanks.* Starting with a tank at the supply water temperature, initiate normal operation of the water heater. After cut-out, determine the mean tank temperature every minute until the maximum value is observed. Determine whether this maximum value for the mean tank temperature is within the range of 135 °F±5 °F (57.2 °C±2.8 °C). If not, turn off the water heater, adjust the thermostat, drain and refill the tank with supply water. Then, once again, initiate normal operation of the water heater, and determine the maximum mean tank temperature after cut-out. Repeat this sequence until the maximum mean

tank temperature after cut-out is 135 °F±5 °F (57.2 °C±2.8 °C).

5.1.2.2 *Tanks with Two or More Thermostats.* Follow the same sequence as for a single thermostat tank, i.e. start at the supply water temperature, operate normally until cutout. Determine if the thermostat that controls the uppermost heating element yields a maximum water temperature of 135 °F±5 °F (57.2 °C±2.8 °C), as measured by the in-tank sensors that are positioned above the uppermost heating element. If the tank temperature at the thermostat is not within 135 °F±5 °F (57.2 °C±2.8 °C), turn off the water heater, adjust the thermostat, drain and refill the tank with supply water. The thermostat that controls the heating element positioned next highest in the tank shall then be set to yield a maximum water temperature of 135 °F±5 °F (57.2 °C±2.8 °C). This process shall be repeated until the thermostat controlling the lowest element is correctly adjusted. When adjusting the thermostat that controls the lowest element, the maximum mean tank temperature after cut-out, as determined using all the in-tank sensors, shall be 135 °F±5 °F (57.2 °C±2.8 °C). When adjusting all other thermostats, use only the in-tank temperature sensors positioned above the heating element in question to evaluate the maximum water temperature after cut-out.

For heat pump water heaters that control an auxiliary resistive element, the thermostat shall be set in accordance with the manufacturer's installation instructions.

5.1.3 *Power Input Determination.* For all water heaters except electric types having immersed heating elements, initiate normal operation and determine the power input, P, to the main burners (including pilot light power, if any) after 15 minutes of operation. If the water heater is equipped with a gas appliance pressure regulator, the regulator outlet pressure shall be set within ±10% of that recommended by the manufacturer. For oil-fired water heaters the fuel pump pressure shall be within ±10% of the manufacturer's specified pump pressure. All burners shall be adjusted to achieve an hourly Btu (kJ) rating that is within ±2% of the value specified by the manufacturer. For an oil-fired water heater, adjust the burner to give a CO_2 reading recommended by the manufacturer and an hourly Btu (kJ) rating that is within ±2% of that specified by the manufacturer. Smoke in the flue may not exceed No. 1 smoke as measured by the procedure in ASTM–D–2156–80.

5.1.4 *First-Hour Rating Test.*

5.1.4.1 *General.* During hot water draws, remove water at a rate of 3.0±0.25 gallons per minute (11.4±0.95 liters per minute). Collect the water in a container that is large enough to hold the volume removed during an individual draw and suitable for weighing at the termination of each draw. Alternatively, a water meter may be used to directly measure the water volume(s) withdrawn.

5.1.4.2 *Draw Initiation Criteria.* Begin the first-hour rating test by imposing a draw on the storage-type water heater. After completion of this first draw, initiate successive draws based on the following criteria. For gas-and oil-fired water heaters, initiate successive draws when the thermostat acts to reduce the supply of fuel to the main burner. For electric water heaters having a single element or multiple elements that all operate simultaneously, initiate successive draws when the thermostat acts to reduce the electrical input supplied to the element(s). For electric water heaters having two or more elements that do not operate simultaneously, initiate successive draws when the applicable thermostat acts to reduce the electrical input to the element located vertically highest in the storage tank. For heat pump waters heaters that do not use supplemental resistive heating, initiate successive draws immediately after the electrical input to the compressor is reduced by the action of the water heater's thermostat. For heat pump waters heaters that use supplemental resistive heating, initiate successive draws immediately after the electrical input to the compressor or the uppermost resistive element is reduced by the action of the applicable water heater thermostat. This draw initiation criterion for heat pump water heaters that use supplemental resistive heating, however, shall only apply when the water located above the thermostat at cut-out is heated to 135 °F±5 °F (57.2 °C±2.8 °C).

5.1.4.3 *Test Sequence.* Establish normal water heater operation. If the water heater is not presently operating, initiate a draw. The draw may be terminated anytime after cut-in occurs. After cut-out occurs (i.e., all thermostats are satisfied), monitor the internal storage tank temperature sensors described in section 4.5 every minute.

Initiate a draw after a maximum mean tank temperature has been observed following cut-out. Record the time when the draw is initiated and designate it as an elapsed time of zero ($\tau^* = 0$). (The superscript * is used to denote variables pertaining to the first-hour rating test.) Record the outlet water temperature beginning 15 seconds after the draw is initiated and at 5-second intervals thereafter until the draw is terminated. Determine the maximum outlet temperature that occurs during this first draw and record it as $T^*_{max,\ 1}$. For the duration of this first draw and all successive draws, in addition, monitor the inlet temperature to the water heater to ensure that the required 58 °F±2 °F (14.4 °C±1.1 °C) test condition is met. Terminate the hot water draw when the outlet temperature decreases to $T^*_{max,1} - 25$ °F ($T^*_{max,1} - 13.9$ °C). Record this temperature as

$T^*_{min,1}$. Following draw termination, determine the average outlet water temperature and the mass or volume removed during this first draw and record them as $\bar{T}^*_{del,1}$ and M^*_1 or V^*_1, respectively.

Initiate a second and, if applicable, successive draw each time the applicable draw initiation criteria described in section 5.1.4.2 are satisfied. As required for the first draw, record the outlet water temperature 15 seconds after initiating each draw and at 5-second intervals thereafter until the draw is terminated. Determine the maximum outlet temperature that occurs during each draw and record it as $T^*_{max,\ i}$, where the subscript i refers to the draw number. Terminate each hot water draw when the outlet temperature decreases to $T^*_{max,\ i}-25$ °F ($T^*_{max,\ i}-13.9$ °C). Record this temperature as $T^*_{min,\ i}$. Calculate and record the average outlet temperature and the mass or volume removed during each draw ($\bar{T}^*_{del,\ i}$ and M^*_i or V^*_i, respectively). Continue this sequence of draw and recovery until one hour has elapsed, then shut off the electrical power and/or fuel supplied to the water heater.

If a draw is occurring at an elapsed time of one hour, continue this draw until the outlet temperature decreases to $T^*_{max,\ n}-25$ °F ($T^*_{max,\ n}-13.9$ °C), at which time the draw shall be immediately terminated. (The subscript n shall be used to denote quantities associated with the final draw.) If a draw is not occurring at an elapsed time of one hour, a final draw shall be imposed at one hour. This draw shall be immediately terminated when the outlet temperature first indicates a value less than or equal to the cut-off temperature used for the previous draw ($T^*_{min,\ n}-1$). For cases where the outlet temperature is close to $T^*_{min,\ n}-1$, the final draw shall proceed for a minimum of 30 seconds. If an outlet temperature greater than $T^*_{min,\ n}-1$ is not measured within 30 seconds, the draw shall be immediately terminated and zero additional credit shall be given towards first-hour rating (i.e., $M^*_n = 0$ or $V^*_n = 0$). After the final draw is terminated, calculate and record the average outlet temperature and the mass or volume removed during the draw ($\bar{T}^*_{del,\ n}$ and M^*_n or V^*_n, respectively).

5.1.5 *24-Hour Simulated Use Test.* During the simulated use test, a total of 64.±3 1.0 gallons (243±3.8 liters) shall be removed. This value is referred to as the daily hot water usage in the following text.

With the water heater turned off, fill the water heater with supply water and apply pressure as described in section 2.5. Turn on the water heater and associated heat pump unit, if present. After the cut-out occurs, the water heater may be operated for up to three cycles of drawing until cut-in, and then operating until cut-out, prior to the start of the test.

At this time, record the mean tank temperature ($\bar{T}_o$), and the electrical and/or fuel measurement readings, as appropriate. Begin the 24-hour simulated use test by withdrawing a volume from the water heater that equals one-sixth of the daily hot water usage. Record the time when this first draw is initiated and assign it as the test elapsed time (τ) of zero (0). Record the average storage tank and ambient temperature every 15 minutes throughout the 24-hour simulated use test unless a recovery or a draw is occurring. At elapsed time intervals of one, two, three, four, and five hours from $\tau = 0$, initiate additional draws, removing an amount of water equivalent to one-sixth of the daily hot water usage with the maximum allowable deviation for any single draw being ±0.5 gallons (1.9 liters). The quantity of water withdrawn during the sixth draw shall be increased or decreased as necessary such that the total volume of water withdrawn equals 64.3 gallons ±1.0 gallon (243.4 liters ±3.8 liters).

All draws during the simulated use test shall be made at flow rates of 3.0 gallons ±0.25 gallons per minute (11.4 liters ±0.95 liters per minute). Measurements of the inlet and outlet temperatures shall be made 15 seconds after the draw is initiated and at every subsequent 5-second interval throughout the duration of each draw. The arithmetic mean of the hot water discharge temperature and the cold water inlet temperature shall be determined for each draw ($\bar{T}_{del,\ i}$ and $\bar{T}_{in,\ i}$). Determine and record the net mass or volume removed (M_i or V_i), as appropriate, after each draw.

At the end of the recovery period following the first draw, record the maximum mean tank temperature observed after cut-out, $\bar{T}_{max,\ 1}$, and the energy consumed by an electric resistance, gas or oil-fired water heater, Q_r. For heat pump water heaters, the total electrical energy consumed during the first recovery by the heat pump (including compressor, fan, controls, pump, etc.) and, if applicable, by the resistive element(s) shall be recorded as Q_r.

At the end of the recovery period that follows the sixth draw, determine and record the total electrical energy and/or fossil fuel consumed since the beginning of the test, Q_{su}. In preparation for determining the energy consumed during standby, record the reading given on the electrical energy (watt-hour) meter, the gas meter, and/or the scale used to determine oil consumption, as appropriate. Record the maximum value of the mean tank temperature after cut-out as $\bar{T}_{su}$. Except as noted below, allow the water heater to remain in the standby mode until 24 hours have elapsed from the start of the test (i.e., since = 0). Prevent the water heater from beginning a recovery cycle during the last hour of the test by turning off the electric power to the electrical heating elements and heat pump, if present, or by turning down the fuel supply to the main burner at

an elapsed time of 23 hours. If a recovery is taking place at an elapsed time of 23 hours, wait until the recovery is complete before reducing the electrical and/or fuel supply to the water heater. At 24 hours, record the mean tank temperature, $\bar{T}_{24}$, and the electric and/or fuel instrument readings. Determine the total fossil fuel or electrical energy consumption, as appropriate, for the entire 24-hour simulated use test, Q. Record the time interval between the time at which the maximum mean tank temperature is observed after the sixth draw and the end of the 24-hour test as $_{stby,\ 1.}$ Record the time during which water is not being withdrawn from the water heater during the entire 24-hour period as $_{stby,\ 2.}$

5.2 *Instantaneous Gas and Electric Water Heaters*

5.2.1 *Setting the Outlet Discharge Temperature.* Initiate normal operation of the water heater at the full input rating for electric instantaneous water heaters and at the maximum firing rate specified by the manufacturer for gas instantaneous water heaters. Monitor the discharge water temperature and set to a value of 135 °F ±5 °F (57.2 °C ±2.8 °C) in accordance with the manufacturer's instructions. If the water heater is not capable of providing this discharge temperature when the flow rate is 3.0 gallons ±0.25 gallons per minute (11.4 liters ±0.95 liters per minute), then adjust the flow rate as necessary to achieve the specified discharge water temperature. Record the corresponding flow rate as $V_{max.}$

5.2.2 *Additional Requirements for Variable Input Instantaneous Gas Water Heaters.* If the instantaneous water heater incorporates a controller that permits operation at a reduced input rate, adjust the flow rate as necessary to achieve a discharge water temperature of 135 °F ±5 °F (57.2 °C ±2.8 °C) while maintaining the minimum input rate. Record the corresponding flow rate as $V_{min.}$ If an outlet temperature of 135 °F ±5 °F (57.2 °C ±2.8 °C) cannot be achieved at the minimum flow rate permitted by the instantaneous water heater, record the flow rate as V_{min} and the corresponding outlet temperature as $T_{min.}$

5.2.3 *Maximum GPM Rating Test for Instantaneous Water Heaters.* Establish normal water heater operation at the full input rate for electric instantaneous water heaters and at the maximum firing rate for gas instantaneous water heaters with the discharge water temperature set in accordance with Section 5.2.1. During the 10-minute test, either collect the withdrawn water for later measurement of the total mass removed, or alternatively, use a water meter to directly measure the water volume removed.

After recording the scale or water meter reading, initiate water flow throughout the water heater, record the inlet and outlet water temperatures beginning 15 seconds after the start of the test and at subsequent 5-second intervals throughout the duration of the test. At the end of 10 minutes, turn off the water. Determine the mass of water collected, M_{10m}, in pounds (kilograms), or the volume of water, V_{10m}, in gallons (liters).

5.2.4 *24-hour Simulated Use Test for Gas Instantaneous Water Heaters.*

5.2.4.1 *Fixed Input Instantaneous Water Heaters.* Establish normal operation with the discharge water temperature and flow rate set to values of 135 °F ±5 °F (57.2 °C ±2.8 °C) and V_{max} per Section 5.2.1, respectively. With no draw occurring, record the reading given by the gas meter and/or the electrical energy meter as appropriate. Begin the 24-hour simulated use test by drawing an amount of water out of the water heater equivalent to one-sixth of the daily hot water usage. Record the time when this first draw is initiated and designate it as an elapsed time, τ, of 0. At elapsed time intervals of one, two, three, four, and five hours from $\tau = 0$, initiate additional draws, removing an amount of water equivalent to one-sixth of the daily hot water usage, with the maximum allowable deviation for any single draw being ±0.5 gallons (1.9 liters). The quantity of water drawn during the sixth draw shall be increased or decreased as necessary such that the total volume of water withdrawn equals 64.3 gallons ±1.0 gallons (243.4 liters ±3.8 liters).

Measurements of the inlet and outlet water temperatures shall be made 15 seconds after the draw is initiated and at every 5-second interval thereafter throughout the duration of the draw. The arithmetic mean of the hot water discharge temperature and the cold water inlet temperature shall be determined for each draw. Record the scale used to measure the mass of the withdrawn water or the water meter reading, as appropriate, after each draw. At the end of the recovery period following the first draw, determine and record the fossil fuel or electrical energy consumed, $Q_{r.}$ Following the sixth draw and subsequent recovery, allow the water heater to remain in the standby mode until exactly 24 hours have elapsed since the start of the test (i.e., since $\tau = 0$). At 24 hours, record the reading given by the gas meter and/or the electrical energy meter as appropriate. Determine the fossil fuel or electrical energy consumed during the entire 24-hour simulated use test and designate the quantity as Q.

5.2.4.2 *Variable Input Instantaneous Water Heaters.* If the instantaneous water heater incorporates a controller that permits continuous operation at a reduced input rate, the first three draws shall be conducted using the maximum flow rate, V_{max}, while removing an amount of water equivalent to one-sixth of the daily hot water usage, with the maximum allowable deviation for any one of the three draws being ±0.5 gallons (1.9 liters). The second three draws shall be conducted at

$V_{min.}$ If an outlet temperature of 135 °F ±5 °F (57.2 °C ±2.8 °C) could not be achieved at the minimum flow rate permitted by the instantaneous water heater, the last three draws should be lengthened such that the volume removed is:

$$V_{4,5,6} = \frac{64.3\ \text{gal}}{6} \times \left[\frac{77°\text{F}}{(T_{min} - 58°\text{F})} \right]$$

or

$$V_{4,5,6} = \frac{243\ \text{L}}{6} \times \left[\frac{42.8°\text{C}}{(T_{min} - 14.4°\text{C})} \right]$$

where T_{min} is the outlet water temperature at the flow rate V_{min} as determined in Section 5.2.1, and where the maximum allowable variation for any one of the three draws is ±0.5 gallons (1.9 liters). The quantity of water withdrawn during the sixth draw shall be increased or decreased as necessary such that the total volume of water withdrawn equals (32.15 + $3 \div V_{4,5,6}$) ±1.0 gallons

((121.7 + $3 \div V_{4,5,6}$) ±3.8 liters).

Measurements of the inlet and outlet water temperatures shall be made 5 seconds after a draw is initiated and at every 5-second interval thereafter throughout the duration of the draw. Determine the arithmetic mean of the hot water discharge temperature and the cold water inlet temperature for each draw. Record the scale used to measure the mass of the withdrawn water or the water meter reading, as appropriate, after each draw. At the end of the recovery period following the first draw, determine and record the fossil fuel or electrical energy consumed, $Q_{r,\ max.}$ Likewise, record the reading of the meter used to measure fossil fuel or electrical energy consumption prior to the fourth draw and at the end of the recovery period following the fourth draw, and designate the difference as $Q_{r,min.}$ Following the sixth draw and subsequent recovery, allow the water heater to remain in the standby mode until exactly 24 hours have elapsed since the start of the test (i.e., since τ=0). At 24 hours, record the reading given by the gas meter and/or the electrical energy meter, as appropriate. Determine the fossil fuel or electrical energy consumed during the entire 24-hour simulated use test and designate the quantity as Q.

6. Computations

6.1 *Storage Tank and Heat Pump Water Heaters.*

6.1.1 *Storage Tank Capacity.* The storage tank capacity is computed using the following:

$$V_{st} = \frac{(W_f - W_t)}{\rho}$$

Where:

V_{st} = the storage capacity of the water heater, gal (L).

W_f = the weight of the storage tank when completely filled with water, lb (kg).

W_t = the (tare) weight of the storage tank when completely empty, lb (kg).

ρ = the density of water used to fill the tank measured at the temperature of the water, lb/gal (kg/L).

6.1.2. *First-Hour Rating Computation.* For the case in which the final draw is initiated at or prior to an elapsed time of one hour, the first-hour rating shall be computed using,

$$F_{hr} = \sum_{i=1}^{n} V_i^*$$

Where:

n = the number of draws that are completed during the first-hour rating test.

V^*_i = the volume of water removed during the *ith* draw of the first-hour rating test, gal (L)

or, if the mass of water is being measured,

$$V_i^* = \frac{M_i^*}{\rho}$$

Where:

M^*_i = the mass of water removed during the ith draw of the first-hour rating test, lb (kg).

ρ = the water density corresponding to the average outlet temperature measured during the *ith* draw, ($\bar{T}^*_{del,\ i}$), lb/gal (kg/L).

For the case in which a draw is not in progress at the elapsed time of one hour and a final draw is imposed at the elapsed time of one hour, the first-hour rating shall be calculated using

$$F_{hr} = \sum_{i=1}^{n-1} V_i^* + V_n^* \left(\frac{\overline{T}^*_{del,\ n} - T^*_{min,\ n-1}}{\overline{T}^*_{del,\ n-1} - T^*_{min,\ n-1}} \right)$$

where *n* and V^*_i are the same quantities as defined above, and

V^*_n = the volume of water drawn during the nth (final) draw of the first-hour rating test, gal (L)

$\bar{T}^*_{del,n-1}$ = the average water outlet temperature measured during the (*n−1*)th draw of the first-hour rating test, °F (°C).

$\bar{T}^*_{del,n}$ = the average water outlet temperature measured during the *n*th (final) draw of the first-hour rating test, °F (°C).

$\bar{T}^*_{min,n-1}$ = the minimum water outlet temperature measured during the $(n-1)$th draw of the first-hour rating test, °F (°C).

6.1.3 *Recovery Efficiency*. The recovery efficiency for gas, oil, and heat pump storage-type water heaters is computed as:

$$\eta_r = \frac{M_1 C_{p1}\left(\overline{T}_{del,1} - \overline{T}_{in,1}\right)}{Q_r} + \frac{V_{st}\rho_2 C_{p2}\left(\overline{T}_{max,1} - \overline{T}_o\right)}{Q_r}$$

Where:

M_1 = total mass removed during the first draw of the 24-hour simulated use test, lb (kg), or, if the volume of water is being measured,

$M_1 = V_1 \rho_1$

Where:

V_1 = total volume removed during the first draw of the 24-hour simulated use test, gal (L).

ρ_1 = density of the water at the water temperature measured at the point where the flow volume is measured, lb/gal (kg/L).

C_{p1} = specific heat of the withdrawn water, $(\bar{T}_{del,1} + \bar{T}_{in,1})$ 2, Btu/lb °F (kJ/kg °C).

$\bar{T}_{del,1}$ = average water outlet temperature measured during the first draw of the 24-hour simulated use test, °F (°C).

$\bar{T}_{in,1}$ = average water inlet temperature measured during the first draw of the 24-hour simulated use test, °F (°C).

V_{st} = as defined in section 6.1.1.

ρ_2 = density of stored hot water, $(\bar{T}_{max,1} + \bar{T}_o)$/ 2, lb/gal (kg/L).

C_{p2} = specific heat of stored hot water evaluated at $(\bar{T}_{max,1} + \bar{T}_o)$ / 2, Btu/lb °F (kJ/kg$_2$ °C).

$\bar{T}_{max,1}$ = maximum mean tank temperature recorded after cut-out following the first draw of the 24-hour simulated use test, °F (°C).

$\bar{T}_o$ = maximum mean tank temperature recorded prior to the first draw of the 24-hour simulated use test, °F (°C).

Q_r = the total energy used by the water heater between cut-out prior to the first draw and cut-out following the first draw, including auxiliary energy such as pilot lights, pumps, fans, etc., Btu (kJ). (Electrical auxiliary energy shall be converted to thermal energy using the following conversion: 1 kWh = 3,412 Btu.)

The recovery efficiency for electric water heaters with immersed heating elements is assumed to be 98%.

6.1.4 *Hourly Standby Losses*. The hourly standby energy losses are computed as:

$$Q_{hr} = \frac{Q_{stby} - \dfrac{V_{st}\rho C_p\left(\overline{T}_{24} - \overline{T}_{su}\right)}{\eta_r}}{\tau_{stby,1}}$$

Where:

Q_{hr} = the hourly standby energy losses of the water heater, Btu/h (kJ/h).

Q_{stby} = the total energy consumed by the water heater between the time at which the maximum mean tank temperature is observed after the sixth draw and the end of the 24-hour test period, Btu (kJ).

V_{st} = as defined in section 6.1.1.

ρ = density of stored hot water, $(\bar{T}_{24} + \bar{T}_{su})$ / 2, lb/gal (kg/L).

C_p = specific heat of the stored water, $(\bar{T}_{24} + \bar{T}_{su})$ / 2, Btu/lb÷°F (kJ/kg÷°C).

$\bar{T}_{24}$ = the mean tank temperature at the end of the 24-hour simulated use test, °F (°C).

$\bar{T}_{su}$ = the maximum mean tank temperature observed after the sixth draw, °F (°C).

η_r = as defined in section 6.1.3.

$\tau_{stby,\ 1}$ = elapsed time between the time at which the maximum mean tank temperature is observed after the sixth draw and the end of the 24-hour simulated use test, h.

The standby heat loss coefficient for the tank is computed as:

$$UA = \frac{Q_{hr}}{\overline{T}_{t,\,stby,1} - \overline{T}_{a,\,stby,1}}$$

Where:

UA = standby heat loss coefficient of the storage tank, Btu/h÷°F (kJ/h÷°C).

Q_{hr} = as defined in this section.

$\bar{T}_{t,\ stby,1}$ = overall average storage tank temperature between the time when the maximum mean tank temperature is observed after the sixth draw and the end of the 24-hour simulated use test, °F (°C).

$\bar{T}_{a,\ stby,1}$ = overall average ambient temperature between the time when the maximum mean tank temperature is observed after the sixth draw and the end of the 24-hour simulated use test, °F (°C).

6.1.5 *Daily Water Heating Energy Consumption*. The daily water heating energy consumption, Q_d, is computed as:

$$Q_d = Q - \frac{V_{st}\rho C_p\left(\overline{T}_{24} - \overline{T}_o\right)}{\eta_r}$$

Where:

Q = total energy used by the water heater during the 24-hour simulated use test including auxiliary energy such as pilot lights, pumps, fans, etc., Btu (kJ). (Electrical auxiliary energy shall be converted to thermal energy using the following conversion: 1 kWh = 3,412 Btu.)

V_{st} = as defined in section 6.1.1.

ρ= density of the stored hot water, $(\bar{T}_{24} + \bar{T}_o) / 2$, lb/gal (kg/L).

C_p = specific heat of the stored water, $(\bar{T}_{24} + \bar{T}_o) / 2$, Btu/lb÷°F (kJ/kg÷°C).

$\bar{T}_{24}$ = mean tank temperature at the end of the 24-hour simulated use test, °F (°C).

$\bar{T}_o$ = mean tank temperature at the beginning of the 24-hour simulated use test, recorded one minute before the first draw is initiated, °F (°C).

η_r = as defined in section 6.1.3.

6.1.6 *Adjusted Daily Water Heating Energy Consumption*. The adjusted daily water heating energy consumption, Q_{da}, takes into account that the temperature difference between the storage tank and surrounding ambient air may not be the nominal value of 67.5 °F (135 °F–67.5 °F) or 37.5 °C (57.2 °C–19.7 °C) due to the 10 °F (5.6 °C) allowable variation in storage tank temperature, 135 °F ±5 °F (57.2 °C ±2.8 °C), and the 5 °F (2.8 °C) allowable variation in surrounding ambient temperature 65 °F (18.3 °C) to 70 °F (21.1 °C). The adjusted daily water heating energy consumption is computed as:

$Q_{da} = Q_D - [(\bar{T}_{stby,\ 2} - \bar{T}_{a,\ stby,2}) - (135\ °F - 67.5\ °F)]\ UA\tau_{stby,\ 2}$

or $Q_{da} = Q_D - [(\bar{T}_{stby,\ 2} - \bar{T}_{a,\ stby,\ 2}) - (57.2\ °C - 19.7\ °C)]\ UA\tau_{stby,\ 2}$

Where:

Q_{da} = the adjusted daily water heating energy consumption, Btu (kJ).

Q_d = as defined in section 6.1.5.

$\bar{T}_{stby,\ 2}$ = the mean tank temperature during the total standby portion, $\tau_{stby,\ 2}$, of the 24-hour test, °F (°C).

$\bar{T}_{a,\ stby,\ 2}$ = the average ambient temperature during the total standby portion, $\tau_{stby,\ 2}$, of the 24-hour test, °F (°C).

UA = as defined in section 6.1.4.

$\tau_{stby,\ 2}$ = the number of hours during the 24-hour simulated test when water is not being withdrawn from the water heater.

A modification is also needed to take into account that the temperature difference between the outlet water temperature and supply water temperature may not be equivalent to the nominal value of 77 °F (135 °F–58 °F) or 42.8 °C (57.2 °C–14.4 °C). The following equations adjust the experimental data to a nominal 77 °F (42.8 °C) temperature rise.

The energy used to heat water, Btu/day (kJ/day), may be computed as:

$$Q_{HW} = \sum_{i=1}^{6} \frac{M_i C_{pi}\left(\overline{T}_{del,\,i} - \overline{T}_{in,\,i}\right)}{\eta_r}$$

Where:

M_i = the mass withdrawn for the *i*th draw (i = 1 to 6), lb (kg).

C_{pi} = the specific heat of the water of the *i*th draw, Btu/lb÷ °F (kJ/kg÷ °C).

$\bar{T}_{del,\ i}$ = the average water outlet temperature measured during the *i*th draw (i=1 to 6), °F (°C).

$\bar{T}_{in,\ i}$ = the average water inlet temperature measured during the *i*th draw (i=1 to 6), °F (°C).

η_r = as defined in section 6.1.3.

The energy required to heat the same quantity of water over a 77 °F (42.8 °C) temperature rise, Btu/day (kJ/day), is:

$$Q_{HW,\,77°F} = \sum_{i=1}^{6} \frac{M_i C_{pi}(135°F - 58°F)}{\eta_r}$$

$$\text{or } Q_{HW,\,42.8°C} = \sum_{i=1}^{6} \frac{M_i C_{pi}(57.2°C - 14.4°C)}{\eta_r}$$

The difference between these two values is:

$Q_{HWD} = Q_{HW,\ 77°-F} - Q_{HW}$

or $Q_{HWD} = Q_{HW,42.8°-F} - Q_{HW}$

which must be added to the adjusted daily water heating energy consumption value. Thus, the daily energy consumption value which takes into account that the temperature difference between the storage tank and ambient temperature may not be 67.5 °F (37.5 °C) and that the temperature rise across the storage tank may not be 77 °F (42.8 °C) is:

$Q_{dm} = Q_{da} + Q_{HWD}$

6.1.7 Energy Factor. The energy factor, Ef, is computed as:

$$E_f = \sum_{i=1}^{6} \frac{M_i C_{pi}(135°F - 58°F)}{Q_{dm}}$$

or

$$E_f = \sum_{i=1}^{6} \frac{M_i C_{pi}(57.2°C - 14.4°C)}{Q_{dm}}$$

Where:

Q_{dm} = the modified daily water heating energy consumption as computed in accordance with section 6.1.6, Btu (kJ).

M_i = the mass withdrawn for the ith draw (i = 1 to 6), lb (kg).

C_{pi} = the specific heat of the water of the ith draw, Btu/lb °F (kJ/kg °C).

6.1.8 *Annual Energy Consumption*. The annual energy consumption for storage-type and heat pump water heaters is computed as:

$E_{annual} = 365 \times Q_{dm}$

Where:

Q_{dm} = the modified daily water heating energy consumption as computed in accordance with section 6.1.6, Btu (kJ).

365 = the number of days in a year.

6.2 *Instantaneous Water Heaters.*

6.2.1 *Maximum GPM (L/min) Rating Computation.* Compute the maximum gpm (L/min) rating as:

$$F_{max} = \frac{M_{10m}\left(\overline{T}_{del} - \overline{T}_{in}\right)}{10(\rho)(135°F - 58°F)}$$

$$\text{or } F_{max} = \frac{M_{10m}\left(\overline{T}_{del} - \overline{T}_{in}\right)}{10(\rho)(57.2°C - 14.4°C)}$$

which may be expressed as:

$$F_{max} = \frac{M_{10m}\left(\overline{T}_{del} - \overline{T}_{in}\right)}{10(\rho)(77°F)}$$

$$\text{or } F_{max} = \frac{M_{10m}\left(\overline{T}_{del} - \overline{T}_{in}\right)}{10(\rho)(42.8°C)}$$

Where:

M_{10m} = the mass of water collected during the 10-minute test, lb (kg).

$\bar{T}_{del}$ = the average delivery temperature, °F (°C).

$\bar{T}_{in}$ = the average inlet temperature, °F (°C).

ρ = the density of water at the average delivery temperature, lb/gal (kg/L).

If a water meter is used the maximum gpm (L/min) rating is computed as:

$$F_{max} = \frac{V_{10m}\left(\overline{T}_{del} - \overline{T}_{in}\right)}{10(77°F)}$$

$$\text{or } F_{max} = \frac{V_{10m}\left(\overline{T}_{del} - \overline{T}_{in}\right)}{10(42.8°C)}$$

Where:

V_{10m} = the volume of water measured during the 10-minute test, gal (L).

$\bar{T}_{del}$ = as defined in this section.

$\bar{T}_{in}$ = as defined in this section.

6.2.2 *Recovery Efficiency*

6.2.2.1 *Fixed Input Instantaneous Water Heaters.* The recovery efficiency is computed as:

$$\eta_r = \frac{M_1 C_{p1}\left(\overline{T}_{del,1} - \overline{T}_{in,1}\right)}{Q_r}$$

Where:

M_1 = total mass removed during the first draw of the 24-hour simulated use test, lb (kg), or, if the volume of water is being measured,

$M_1 = V_1 \cdot \rho$

Where:

V_1 = total volume removed during the first draw of the 24-hour simulated use test, gal (L).

ρ= density of the water at the water temperature measured at the point where the flow volume is measured, lb/gal (kg/L).

C_{p1} = specific heat of the withdrawn water, $(\bar{T}_{del,1} + T_{in,1}) / 2$, Btu/lb °F (kJ/kg °C).

$\bar{T}_{del,1}$ = average water outlet temperature measured during the first draw of the 24-hour simulated use test, °F (°C).

$\bar{T}_{in,1}$ = average water inlet temperature measured during the first draw of the 24-hour simulated use test, °F (°C).

Q_r = the total energy used by the water heater between cut-out prior to the first draw and cut-out following the first draw, including auxiliary energy such as pilot lights, pumps, fans, etc., Btu (kJ). (Electrical auxiliary energy shall be converted to thermal energy using the following conversion: 1 kWh = 3,412 Btu.)

6.2.2.2 *Variable Input Instantaneous Water Heaters.* For instantaneous water heaters that have a variable firing rate, two recovery efficiency values are computed, one at the maximum input rate and one at the minimum input rate. The recovery efficiency used in subsequent computations is taken as the average of these two values. The maximum recovery efficiency is computed as:

$$\eta_{r,max} = \frac{M_1 C_{p1}\left(\overline{T}_{del,1} - \overline{T}_{in,1}\right)}{Q_{r,max}}$$

Where:

M_1 = as defined in section 6.2.2.1.

C_{p1} = as defined in section 6.2.2.1.

$\bar{T}_{del,1}$ = as defined in section 6.2.2.1.

$\bar{T}_{in,1}$ = as defined in section 6.2.2.1.

$Q_{r,max}$ = the total energy used by the water heater between burner cut-out prior to the first draw and burner cut-out following the first draw, including auxiliary energy such as pilot lights, Btu (kJ).

The minimum recovery efficiency is computed as:

$$\eta_{r,min} = \frac{M_4 C_{p4}\left(\overline{T}_{del,4} - \overline{T}_{in,4}\right)}{Q_{r,min}}$$

Where:

M_4 = the mass withdrawn during the fourth draw, lb (kg), or, if the volume of water is being measured,

$M_4 = V_4\ \rho$

Where:

V_4 = total volume removed during the first draw of the 24-hour simulated use test, gal (L).

ρ = as defined in 6.2.2.1

C_{p4} = the specific heat of water, Btu/lb °F (kJ/kg °C).

$\bar{T}_{del,\ 4}$ = the average delivery temperature for the fourth draw, °F (°C).

$\bar{T}_{in,\ 4}$ = the average inlet temperature for the fourth draw, °F (°C).

$Q_{r,\ min}$ = the total energy consumed between the beginning of the fourth draw and burner cut-out following the fourth draw, including auxiliary energy such as pilot lights, Btu (kJ).

The recovery efficiency is computed as:

$$\eta_r = \frac{\eta_{r,\max} + \eta_{r,\min}}{2}$$

Where:

$\eta_{r,max}$ = as calculated above.

$\eta_{r,min}$ = as calculated above.

6.2.3 *Daily Water Heating Energy Consumption*. The daily water heating energy consumption, Q_d, is computed as:

$Q_d = Q$

Where:

Q = the energy used by the instantaneous water heater during the 24-hr simulated use test.

A modification is needed to take into account that the temperature difference between the outlet water temperature and supply water temperature may not be equivalent to the nominal value of 77 °F (135 °F − 58 °F) or 42.8 °C (57.2 °C − 14.4 °C). The following equations adjust the experimental data to a nominal 77 °F (42.8 °C) temperature rise.

The energy used to heat water may be computed as:

$$Q_{HW} = \sum_{i=1}^{6} \frac{M_i C_{pi}\left(\overline{T}_{del,i} - \overline{T}_{in,i}\right)}{\eta_r}$$

Where:

M_i = the mass withdrawn during the ith draw, lb (kg).

C_{pi} = the specific heat of water of the ith draw, Btu/lb °F (kJ/kg (°C).

$\bar{T}_{del,i}$ = the average delivery temperature of the ith draw, °F (°C).

$\bar{T}_{in,i}$ = the average inlet temperature of the ith draw, °F (°C).

η_r = as calculated in section 6.2.2.2.

The energy required to heat the same quantity of water over a 77 °F (42.8 °C) temperature rise is:

$$Q_{HW,\,77°F} = \sum_{i=1}^{6} \frac{M_i C_{pi}(135°F - 58°F)}{\eta_r}$$

$$\text{or } Q_{HW,\,42.8°C} = \sum_{i=1}^{6} \frac{M_i C_{pi}(57.2°C - 14.4°C)}{\eta_r}$$

Where:

M_i = the mass withdrawn during the *i*th draw, lb (kg).

C_{pi} = the specific heat of water of the ith draw, Btu/lb °F (kJ/kg (°C).

η_r = as calculated above.

The difference between these two values is:

$Q_{HWD} = Q_{HW,\ 77\ °F} - Q_{HW}$

or $Q_{HWD} = Q_{HW,\ 42.8\ °C} - Q_{HW}$

which much be added to the daily water heating energy consumption value. Thus, the daily energy consumption value which takes into account that the temperature rise across the storage tank may not be 77 °F (42.8 °C) is:

$Q_{dm} = Q_d + Q_{HWD}$

6.2.4 *Energy Factor*. The energy factor, E_f, is computed as:

$$E_f = \sum_{i=1}^{6} \frac{M_i C_{pi}(135°F - 58°F)}{Q_{dm}}$$

$$\text{or } E_f = \sum_{i=1}^{6} \frac{M_i C_{pi}(57.2°C - 14.4°C)}{Q_{dm}}$$

Where:

Q_{dm} = the daily water heating energy consumption as computed in accordance with section 6.2.3, Btu (kJ).

M_i = the mass associated with the *i*th draw, lb (kg).

C_{pi} = the specific heat of water computed at a temperature of (58 °F + 135 °F) / 2, Btu/lb °F [(14.4 °C + 57.2 °C) / 2, kJ/kg °C].

6.2.5 *Annual Energy Consumption*. The annual energy consumption for instantaneous type water heaters is computed as:

$E_{annual} = 365 \times Q_{dm}$

Where:

Q_{dm} = the modified daily energy consumption, Btu/day (kJ/day).

365 = the number of days in a year.

7. Ratings for Untested Models

In order to relieve the test burden on manufacturers who offer water heaters which differ only in fuel type or power input, ratings for untested models may be established in accordance with the following procedures. In lieu of the following procedures a manufacturer may elect to test the unit for which a rating is sought.

7.1 *Gas Water Heaters*. Ratings obtained for gas water heaters using natural gas can be used for an identical water heater which utilizes propane gas if the input ratings are within ±10%.

7.2 *Electric Water Heaters*

7.2.1 *First-Hour Rating*. If an electric storage-type water heater is available with more than one input rating, the manufacturer shall designate the standard input rating, and the water heater need only be tested with heating elements at the designated standard input ratings. The first-hour ratings for units having power input rating less than the designated standard input rating shall be assigned a first-hour rating equivalent to the first draw of the first-hour rating for the electric water heater with the standard input rating. For units having power inputs greater than the designated standard input rating, the first-hour rating shall be equivalent to that measured for the water heater with the standard input rating.

7.2.2 *Energy Factor*. The energy factor for identical electric storage-type water heaters, with the exception of heating element wattage, may use the energy factor obtained during testing of the water heater with the designated standard input rating.

[63 FR 26008, May 11, 1998; 63 FR 38738, July 20, 1998, as amended at 66 FR 4497, Jan. 17, 2001]

APPENDIX F TO SUBPART B OF PART 430—UNIFORM TEST METHOD FOR MEASURING THE ENERGY CONSUMPTION OF ROOM AIR CONDITIONERS

NOTE: Manufacturers are not required to use the test procedures and calculations that refer to standby mode and off mode energy consumption, (specifically, sections 2.2, 3.2, 4.2, and 5.3 of this appendix F) until the compliance date of any amended energy conservation standards for room air conditioners at 10 CFR 430.32(b).

1. *Definitions*.

1.1 ''Active mode'' means a mode in which the room air conditioner is connected to a mains power source, has been activated and is performing the main function of cooling or heating the conditioned space, or circulating air through activation of its fan or blower, with or without energizing active air-cleaning components or devices such as ultraviolet (UV) radiation, electrostatic filters, ozone generators, or other air-cleaning devices.

1.2 ''ANSI/AHAM RAC–1'' means the test standard published jointly by the American National Standards Institute and the Association of Home Appliance Manufacturers, titled ''Room Air Conditioners,'' Standard RAC–1–2008 (incorporated by reference; see § 430.3).

1.3 ''ANSI/ASHRAE 16'' means the test standard published jointly by the American National Standards Institute and the American Society of Heating, Refrigerating, and Air-Conditioning Engineers titled ''Method of Testing for Rating Room Air Conditioners and Packaged Terminal Air Conditioners,'' Standard 16–1983 (RA 2009) (incorporated by reference; see § 430.3).

1.4 ''IEC 62301'' means the test standard published by the International Electrotechnical Commission, (''IEC''), titled ''Household electrical appliances—Measurement of standby power,'' Publication 62301 (first edition June 2005), (incorporated by reference; see § 430.3).

1.5 ''Inactive mode'' means a standby mode that facilitates the activation of active mode by remote switch (including remote control) or internal sensor or which provides continuous status display.

1.6 ''Off mode'' means a mode in which a room air conditioner is connected to a mains power source and is not providing any active or standby mode function and where the mode may persist for an indefinite time. An indicator that only shows the user that the product is in the off position is included within the clasification of an off mode.

1.7 ''Standby mode'' means any product modes where the where the energy using product is connected to a mains power source and offers one or more of the following user oriented or protective functions which may persist for an indefinite time:

(a) To facilitate the activation of other modes (including activation or deactivation of active mode) by remote switch (including remote control), internal sensor, or timer.

(b) Continuous functions, including information or status displays (including clocks) or sensor-based functions. A timer is a continuous clock function (which may or may not be associated with a display) that provides regular scheduled tasks (*e.g.*, switching) and that operates on a continuous basis.

2. *Test methods*.

2.1 *Cooling*. The test method for testing room air conditioners in cooling mode shall consist of application of the methods and conditions in ANSI/AHAM RAC–1 sections 4, 5, 6.1, and 6.5 (incorporated by reference; see § 430.3), and in ANSI/ASHRAE 16 (incorporated by reference; see § 430.3).

2.2 *Standby and off modes*. The method for testing room air conditioners in standby and off modes shall consist of application of the methods and conditions in IEC 62301 (incorporated by reference; see § 430.3), as modified by the requirements of this standard. The testing may be conducted in test facilities used for testing cooling performance. If testing is not conducted in such a facility, the test facility shall comply with IEC 62301 section 4.2.

3. *Test conditions*.

3.1 *Cooling mode*. Establish the test conditions described in sections 4 and 5 of ANSI/AHAM RAC–1 (incorporated by reference; see §430.3) and in accordance with ANSI/ASHRAE 16 (incorporated by reference; see §430.3).

3.2 *Standby and off modes*.

3.2.1 *Test room conditions*. Maintain the indoor test conditions as required by section 4.2 of IEC 62301 (incorporated by reference; see §430.3). If the standby and off mode testing is conducted in a facility that is also used for testing cooling performance, maintain the outdoor test conditions either as required by section 4.2 of IEC 62301 or as described in section 3.1. If the unit is equipped with an outdoor air ventilation damper, close this damper during testing.

3.2.2 *Power supply*. Maintain power supply conditions specified in section 4.3 of IEC 62301 (incorporated by reference; see §430.3). Use room air conditioner nameplate voltage and frequency as the basis for power supply conditions. Maintain power supply voltage waveform according to the requirements of section 4.4 of IEC 62301.

3.2.3 *Watt meter*. The watt meter used to measure standby mode and off mode power consumption of the room air conditioner shall have the resolution specified in section 4, paragraph 4.5 of IEC 62301 (incorporated by reference; see §430.3). The watt meter shall also be able to record a ''true'' average power specified in section 5, paragraph 5.3.2(a) of IEC 62301.

4. *Measurements*.

4.1 *Cooling mode*. Measure the quantities delineated in section 5 of ANSI/AHAM RAC–1 (incorporated by reference; see §430.3).

4.2 *Standby and off modes*. Establish the testing conditions set forth in section 3.2. Prior to the initiation of the test measurements, the room air conditioner shall also be installed in accordance with section 5, paragraph 5.2 of IEC 62301 (incorporated by reference; see §430.3). For room air conditioners that drop from a higher power state to a lower power state as discussed in section 5, paragraph 5.1, note 1 of IEC 62301, allow sufficient time for the room air conditioner to reach the lower power state before proceeding with the test measurement. Follow the test procedure specified in section 5, paragraph 5.3 of IEC 62301 for testing in each possible mode as described in 4.2.1 and 4.2.2, except allow the product to stabilize for 5 to 10 minutes and use an energy use measurement period of 5 minutes. For units in which power varies over a cycle, as described in section 5, paragraph 5.3.2 of IEC 62301, use the average power approach in paragraph 5.3.2(a).

4.2.1 If a room air conditioner has an inactive mode, as defined in 1.5, measure and record the average inactive mode power of the room air conditioner, P_{IA}, in watts.

4.2.2 If a room air conditioner has an off mode, as defined in 1.6, measure and record the average off mode power of the room air conditioner, P_{OFF}, in watts.

5. *Calculations*.

5.1 Calculate the cooling capacity (expressed in Btu/hr) as required in section 6.1 of ANSI/AHAM RAC–1 (incorporated by reference; see §430.3) and in accordance with ANSI/ASHRAE 16 (incorporated by reference; see §430.3).

5.2 Determine the electrical power input (expressed in watts) as required by section 6.5 of ANSI/AHAM RAC–1 (incorporated by reference; see §430.3) and in accordance with ANSI/ASHRAE 16 (incorporated by reference; see §430.3).

5.3 *Standby mode and off mode annual energy consumption*. Calculate the standby mode and off mode annual energy consumption for room air conditioners, E_{TSO}, expressed in kilowatt-hours per year, according to the following:

$$E_{TSO} = [(P_{IA} \times S_{IA}) + (P_{OFF} \times S_{OFF})] \times K$$

Where:

P_{IA} = room air conditioner inactive mode power, in watts, as measured in section 4.2.1

P_{OFF} = room air conditioner off mode power, in watts, as measured in section 4.2.2.

If the room air conditioner has both inactive mode and off mode, S_{IA} and S_{OFF} both equal 5,115 ÷ 2 = 2,557.5, where 5,115 is the total inactive and off mode annual hours;

If the room air conditioner has an inactive mode but no off mode, the inactive mode annual hours, S_{IA}, is equal to 5,115 and the off mode annual hours, S_{OFF}, is equal to 0;

If the room air conditioner has an off mode but no inactive mode, S_{IA} is equal to 0 and S_{OFF} is equal to S_{TOT};

K = 0.001 kWh/Wh conversion factor for watt-hours to kilowatt-hours.

[76 FR 1035, Jan. 6, 2011]

APPENDIX G TO SUBPART B OF PART 430—UNIFORM TEST METHOD FOR MEASURING THE ENERGY CONSUMPTION OF UNVENTED HOME HEATING EQUIPMENT

1. Testing conditions.

1.1 *Installation*.

1.1.1 *Electric heater*. Install heater according to manufacturer's instructions. Heaters shall be connected to an electrical supply circuit of nameplate voltage with a wattmeter installed in the circuit. The wattmeter shall have a maximum error not greater than one percent.

1.1.2 *Unvented gas heater*. Install heater according to manufacturer's instructions. Heaters shall be connected to a gas supply line with a gas displacement meter installed

between the supply line and the heater according to manufacturer's specifications. The gas displacement meter shall have a maximum error not greater than one percent. Gas heaters with electrical auxiliaries shall be connected to an electrical supply circuit of nameplate voltage with a wattmeter installed in the circuit. The wattmeter shall have a maximum error not greater than one percent.

1.1.3 *Unvented oil heater*. Install heater according to manufacturer's instructions. Oil heaters with electric auxiliaries shall be connected to an electrical supply circuit of nameplate voltage with a wattmeter installed in the circuit. The wattmeter shall have a maximum error not greater than one percent.

1.2 *Temperature regulating controls*. All temperature regulating controls shall be shorted out of the circuit or adjusted so that they will not operate during the test period.

1.3 *Fan controls*. All fan controls shall be set at the highest fan speed setting.

1.4 *Energy supply*.

1.4.1 *Electrical supply*. Supply power to the heater within one percent of the nameplate voltage.

1.4.2 *Natural gas supply*. For an unvented gas heater utilizing natural gas, maintain the gas supply to the heater with a normal inlet test pressure immediately ahead of all controls at 7 to 10 inches of water column. The regulator outlet pressure at normal supply test pressure shall be approximately that recommended by the manufacturer. The natural gas supplied should have a higher heating value within ±5 percent of 1,025 Btu's per standard cubic foot. Determine the higher heating value, in Btu's per standard cubic foot, for the natural gas to be used in the test, with an error no greater than one percent. Alternatively, the test can be conducted using ''bottled'' natural gas of a higher heating value within ±5 percent of 1,025 Btu's per standard cubic foot as long as the actual higher heating value of the bottled natural gas has been determined with an error no greater than one percent as certified by the supplier.

1.4.3 *Propane gas supply*. For an unvented gas heater utilizing propane, maintain the gas supply to the heater with a normal inlet test pressure immediately ahead of all controls at 11 to 13 inches of water column. The regulator outlet pressure at normal supply test pressure shall be that recommended by the manufacturer. The propane supplied should have a higher heating value of within±5 percent of 2,500 Btu's per standard cubic foot. Determine the higher heating value in Btu's per standard foot, for the propane to be used in the test, with an error no greater than one percent. Alternatively, the test can be conducted using ''bottled'' propane of a higher heating value within ±5 percent of 2,500 Btu's per standard cubic foot as long as the actual higher heating value of the bottled propane has been determined with an error no greater than one percent as certified by the supplier.

1.4.4 *Oil supply*. For an unvented oil heater utilizing kerosene, determine the higher heating value in Btu's per gallon with an error no greater than one percent. Alternatively, the test can be conducted using a tested fuel of a higher heating value within ±5 percent of 137,400 Btu's per gallon as long as the actual higher heating value of the tested fuel has been determined with an error no greater than one percent as certified by the supplier.

1.5 *Energy flow instrumentation*. Install one or more energy flow instruments which measure, as appropriate and with an error no greater than one percent, the quantity of electrical energy, natural gas, propane gas, or oil supplied to the heater.

2. Testing and measurements.

2.1 *Electric power measurement*. Establish the test conditions set forth in section 1 of this appendix. Allow an electric heater to warm up for at least five minutes before recording the maximum electric power measurement from the wattmeter. Record the maximum electric power (P_E) expressed in kilowatts.

Allow the auxiliary electrical system of a forced air unvented gas, propane, or oil heater to operate for at least five minutes before recording the maximum auxiliary electric power measurement from the wattmeter. Record the maximum auxiliary electric power (P_A) expressed in kilowatts.

2.2 *Natural gas, propane, and oil measurement*. Establish the test conditions as set forth in section 1 of this appendix. A natural gas, propane, or oil heater shall be operated for one hour. Using either the nameplate rating or the energy flow instrumentation set forth in section 1.5 of this appendix and the fuel supply rating set forth in sections 1.4.2, 1.4.3, or 1.4.4 of this appendix, as appropriate, determine the maximum fuel input (P_F) of the heater under test in Btu's per hour. The energy flow instrumentation shall measure the maximum fuel input with an error no greater than one percent.

2.3 *Pilot light measurement*. Except as provided in section 2.3.1 of this appendix, measure the energy input rate to the pilot light (Q_p), with an error no greater than 3 percent, for unvented heaters so equipped.

2.3.1 The measurement of Q_p is not required for unvented heaters where the pilot light is designed to be turned off by the user when the heater is not in use (*i.e.*, for units where turning the control to the OFF position will shut off the gas supply to the burner(s) and the pilot light). This provision applies only if an instruction to turn off the unit is provided on the heater near the gas control value (*e.g.*, by label) by the manufacturer.

2.4 *Electrical standby mode power measurement.* Except as provided in section 2.4.1 of this appendix, for all electric heaters and unvented heaters with electrical auxiliaries, measure the standby power ($P_{W,SB}$) in accordance with the procedures in IEC 62301 Second Edition (incorporated by reference; see § 430.3), with all electrical auxiliaries not activated. Voltage shall be as specified in section 1.4.1 *Electrical supply* of this appendix. The recorded standby power ($P_{W,SB}$) shall be rounded to the second decimal place, and for loads greater than or equal to 10W, at least three significant figures shall be reported.

2.4.1 The measurement of $P_{W,SB}$ is not required for heaters designed to be turned off by the user when the heater is not in use (*i.e.*, for units where turning the control to the OFF position will shut off the electrical supply to the heater). This provision applies only if an instruction to turn off the unit is provided on the heater (*e.g.*, by label) by the manufacturer.

3. Calculations.

3.1 *Annual energy consumption for primary electric heaters.* For primary electric heaters, calculate the annual energy consumption (E_E) expressed in kilowatt-hours per year and defined as:

$E_E = 2080(0.77)DHR$

where:

2080 = national average annual heating load hours
0.77 = adjustment factor
DHR = design heating requirement and is equal to $P_E/1.2$ in kilowatts.
P_E = as defined in 2.1 of this appendix
1.2 = typical oversizing factor for primary electric heaters

3.2 *Annual energy consumption for primary electric heaters by geographic region of the United States.* For primary electric heaters, calculate the annual energy consumption by geographic region of the United States (E_R) expressed in kilowatt-hours per year and defined as:

$E_R = HLH(0.77)\ (DHR)$

where:

HLH = heating load hours for a specific region determined from Figure 1 of this appendix in hours
0.77 = as defined in 3.1 of this appendix
DHR = as defined in 3.1 of this appendix

3.3 *Rated output for electric heaters.* Calculate the rated output (Q_{out}) for electric heaters, expressed in Btu's per hour, and defined as:

$Q_{out} = P_E\ (3{,}412\ Btu/kWh)$

where:

P_E = as defined in 2.1 of this appendix

3.4 *Rated output for unvented heaters using either natural gas, propane, or oil.* For unvented heaters using either natural gas, propane, or oil equipped without auxiliary electrical systems, the rated output (Q_{out}), expressed in Btu's per hour, is equal to P_F, as determined in section 2.2 of this appendix.

For unvented heaters using either natural gas, propane, or oil equipped with auxiliary electrical systems, calculate the rated output (Q_{out}), expressed in Btu's per hour, and defined as:

$Q_{out} = P_F + P_A\ (3{,}412\ Btu/kWh)$

where:

P_F = as defined in 2.2 of this appendix in Btu/hr
P_A = as defined in 2.1 of this appendix in Btu/hr

FIGURE I

Heating Load Hours (HLH) for the United States and Territories

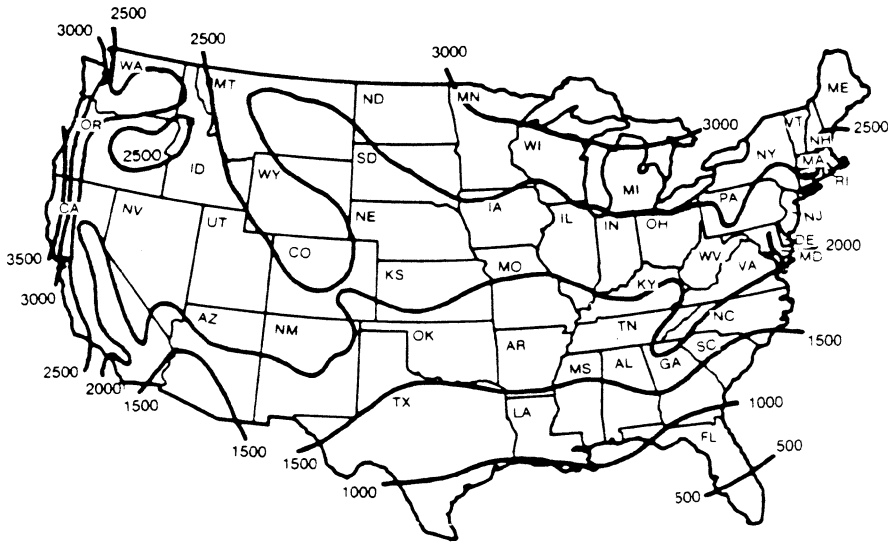

This map is reasonably accurate for most parts of the United States but is necessarily highly generalized and consequently not too accurate in mountainous regions, particularly in the Rockies

Alaska	— 3500 HLH
Hawaii and Territories	— 0 HLH

(Energy Policy and Conservation Act, Pub. L. 94–163, as amended by Pub. L. 94–385; Federal Energy Administration Act of 1974, Pub. L. 93–275, as amended by Pub. L. 94–385; Department of Energy Organization Act, Pub. L. 95–91; E.O. 11790, 39 FR 23185)

[43 FR 20132, May 10, 1978. Redesignated and amended at 44 FR 37938, June 29, 1979; 49 FR 12157, Mar. 28, 1984; 77 FR 74571, Dec. 17, 2012]

APPENDIX H TO SUBPART B OF PART 430—UNIFORM TEST METHOD FOR MEASURING THE POWER CONSUMPTION OF TELEVISION SETS

NOTE: After April 23, 2014, any representations made with respect to the energy use or efficiency of televisions must be made in accordance with the results of testing pursuant to this appendix. Given that after April 23, 2014 representations with respect to the energy use or efficiency of televisions must be made in accordance with tests conducted pursuant to this appendix, manufacturers may wish to begin using this test procedure as soon as possible.

1. SCOPE

This appendix covers the test requirements used to measure the energy and power consumption of television sets that:

(i) Have a diagonal screen size of at least fifteen inches; and

(ii) Are powered by mains power (including TVs with auxiliary batteries but not TVs with main batteries).

2. DEFINITIONS AND SYMBOLS

2.1. *Additional functions* shall be defined using the additional functions definition in section 3.1.1 of IEC 62087 Ed. 3.0 (incorporated by reference, see §430.3).

2.2. *Auxiliary Battery* means a battery capable of powering a clock or retaining TV settings but is incapable of powering the TV to produce dynamic video.

2.3. *Brightest selectable preset picture setting* means the preset picture setting in which the television produces the highest screen luminance within either the home or retail configuration.

2.4. *Default picture setting* means the preset picture setting that the TV enters into immediately after making a selection from the forced menu. If the TV does not have a forced menu, this is the as-shipped preset picture setting.

2.5. *Forced menu* means a series of menus which require the selection of initial settings before allowing the user to utilize primary functions. Within these menus contains an option to choose the viewing environment between retail and home configurations.

2.6. *Home configuration* means the TV configuration selected from the forced menu which is designed for typical consumer viewing and is recommended by the manufacturer for home environments.

2.7. *IEC 62087 Ed. 3.0* means the test standard published by the International Electrotechnical Commission, entitled ''Methods of measurement of the power consumption of audio, video, and related equipment,'' IEC 62087 Ed. 3.0 (incorporated by reference, see § 430.3).

2.8. *IEC 62087 Ed. 3.0 Blu-ray Disc™ Dynamic Broadcast-Content Video Signal* means the test video content published by the International Electrotechnical Commission, entitled ''IEC 62087 Ed. 3.0, video content_BD, video content for IEC 62087 Ed. 3.0 on Blu-ray™ Disc,'' IEC 62087 Ed. 3.0 (incorporated by reference, see § 430.3).

2.9. *IEC 62301 Ed. 2.0* means the test standard published by the International Electrotechnical Commission, entitled ''Household electrical appliances—Measurement of standby power,'' IEC 62301 Ed. 2.0 (incorporated by reference, see § 430.3).

2.10. *Illuminance* means the luminous flux per unit area of light illuminating a given surface, expressed in units of lux (lx).

2.11. *Luminance* means the photometric measure of the luminous intensity per unit area of light traveling in a given direction, expressed in units of candelas per square meter (cd/m^2).

2.12. *Main battery* means a battery capable of powering the TV to produce dynamic video without the support of mains power.

2.13. *Off mode* means the mode of operation in which the TV is connected to mains power, produces neither sound nor picture, and cannot be switched into any other mode of operation with the remote control unit, an internal signal, or external signal.

2.14. *On mode* means the mode of operation in which the TV is connected to mains power, and is capable of producing dynamic video.

2.15. *Preset picture setting* means a preprogrammed factory setting obtained from the TV menu with pre-determined picture parameters such as brightness, contrast, color, sharpness, etc. Preset picture settings can be selected within the home or retail mode.

2.16. *Retail configuration* means the TV configuration selected from the forced menu which is designed to highlight the TV's features in a retail environment. This configuration may display demos, disable configurable settings, or increase screen brightness in a manner which is not desirable for typical consumer viewing.

2.17. *Special functions* shall be defined using the definition in section 3.1.18 of IEC 62087 Ed. 3.0 (incorporated by reference, see § 430.3).

2.18. *Standby-passive mode* means the mode of operation in which the TV is connected to mains power, produces neither sound nor picture, and can be switched into another mode with only the remote control unit or an internal signal.

2.19. *Standby-active, high mode* means the mode of operation in which the TV is connected to mains power, produces neither sound nor picture, is exchanging/receiving data with/from an external source, and can be switched into another mode of operation with the remote control unit, an internal signal, or an external signal.

2.20. *Standby-active, low mode* means the mode of operation in which the TV is connected to mains power, produces neither sound nor picture, can be switched into another mode with the remote control unit or an internal signal, and can additionally be switched into another mode with an external signal.

2.21. *Symbol usage.* The following identity relationships are provided to help clarify the symbols used throughout this test procedure.

ABC—Automatic Brightness Control
AEC—Annual Energy Consumption
BD—Blu-ray Disc™
DVD—Digital Versatile Disc™
DVI—Digital Visual Interface
HDMI®—High Definition Multimedia Interface
$L_{brightest}$—Screen luminance in brightest selectable preset picture setting within the home configuration
$L_{default}$—Screen luminance in default picture setting within the home configuration
$L_{default—retail}$—Screen luminance in default picture setting within the retail configuration
LAN—Local Area Network
P_{on}—Power consumed in on mode
P_3—Average power consumed in on mode, ABC enabled, 3 lx
P_{12}—Average power consumed in on mode, ABC enabled, 12 lx
P_{35}—Average power consumed in on mode, ABC enabled, 35 lx

P_{100}—Average power consumed in on mode, ABC enabled, 100 lx
$P_{standby\text{-}passive}$—Power consumption in standby-passive mode
$P_{standby\text{-}active,\ low}$—Power consumption in standby-active, low mode
P_{off}—Power consumption in off mode
STB—Set-top Box
THD—Total Harmonic Distortion
TV—Television Set
USB—Universal Serial Bus
W_3—Percent weighting for on mode, ABC enabled, 3 lx
W_{12}—Percent weighting for on mode, ABC enabled, 12 lx
W_{35}—Percent weighting for on mode, ABC enabled, 35 lx
W_{100}—Percent weighting for on mode, ABC enabled, 100 lx
WAN—Wide Area Network

3. ACCURACY AND PRECISION OF MEASUREMENT EQUIPMENT

3.1. *Voltage and Frequency*. Set the test voltage and frequency to the rated electrical supply values of the region in accordance with Table 1 in section 4.3.1 of IEC 62301 Ed. 2.0

3.2. *Power Supply Requirements*. The TV power use shall be measured using a power supply that meets the specifications found in section 4.3.1 of IEC 62301 Ed. 2.0 (incorporated by reference, see § 430.3). The THD of the supply voltage shall not exceed 5%, inclusive to the 13th order harmonic, when the unit is under test.

3.3. *Power Meter Requirements*. The power measurement shall be carried out directly by means of a wattmeter, a wattmeter with averaging function, or a watt-hour meter by dividing the reading by the measuring time. For TVs where the input video signal varies over time, use a wattmeter with an averaging function to carry out the measurement.

3.3.1. The sampling rate of the watt-hour meter or wattmeter with averaging function shall be one measurement per second or more frequent.

3.3.2. The power measurement instrument shall measure and record the power factor and the real power consumed during all on mode tests at the same sampling rate.

3.3.3. Power measurements of 0.5 W or greater shall be made with an uncertainty of less than or equal to 2 percent (at the 95 percent confidence level). Measurements of power of less than 0.5 W shall be made with an uncertainty of less than or equal to 0.01 W (at the 95 percent confidence level). The power measurement instrument shall have a resolution of:

0.01 W or better for power measurements of 10 W or less;

0.1 W or better for power measurements of greater than 10 W up to 100 W;

1 W or better for power measurements of greater than 100 W.

3.4. *Luminance Meter Requirements*. Contact or non-contact luminance meters shall have an accuracy of ± 2 percent ± 2 digits of the digitally displayed value. Non-contact meters are also required to have an acceptance angle of 3 degrees or less.

3.5. *Illuminance Meter Requirements*. All illuminance meters shall have an accuracy of ± 2 percent ± 2 digits of the digitally displayed value.

3.6. *Video Input Device*. The video input device (i.e. BD player) shall be capable of decoding a BD signal. The video input device manufacturer shall be different from the manufacturer of the TV under test to prevent device interaction.

4. TEST ROOM SET-UP

4.1. *Ambient Temperature Conditions*. For all testing, maintain ambient temperature conditions in accordance with in section 11.4.1 of IEC 62087 Ed. 3.0 (incorporated by reference, see § 430.3).

4.2. *Ambient Relative Humidity Conditions*. For all testing, maintain the ambient relative humidity between 10 and 80 percent.

4.3. *Room Illuminance Level*. All luminance testing (with a non-contact meter) and on mode testing (with ABC enabled by default) shall be performed in a room which measures less than or equal to 1.0 lx measured at the ABC sensor while the TV is in off or a standby mode. If the TV does not have an ABC sensor, measure at the bottom center of the TV bezel.

4.4. *Installation*. Install the TV in accordance with manufacturer's instructions.

4.5. *TV Placement*. TVs which have an ABC sensor enabled by default shall be placed at least 0.5 meters away from any wall surface (i.e. wall, ceiling, and floor). This does not include the furnishings which the TV may be placed on or the wall which the back of the TV faces. All four corners of the face of the TV shall be placed equidistant from a vertical reference plane (e.g. wall).

5. TV AND VIDEO SIGNAL CONFIGURATION

5.1. *Additional Functions*. The TV shall be set up according to the requirements in section 11.4.5 of IEC 62087 Ed. 3.0 (incorporated by reference, see § 430.3).

5.2. *Video Connection Priority*. The TV and the video input device shall be connected using an HDMI input cable. If the TV does not have an HDMI input terminal, the specified input terminals shall be used in the following order: Component video, S-video, and Composite video.

5.3. *Input Terminal*. If the TV has multiple input terminals of the same type (i.e. HDMI 1, HDMI 2), testing shall only be performed using any input terminal designed for viewing live TV or dynamic content from a BD

player or STB, not from an input designed for an alternative purpose. Examples 1 and 2 provide visual explanations of this requirement.

Example 1: All input terminals present are acceptable for testing

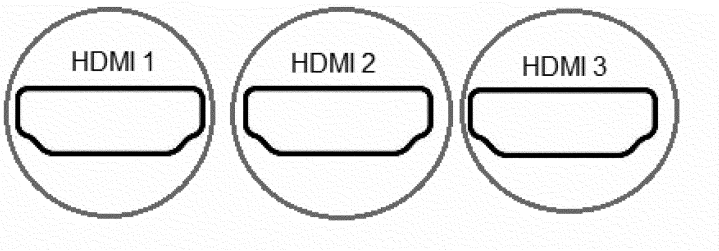

Example 2: Only TV/STB and HDMI are acceptable input terminals for testing

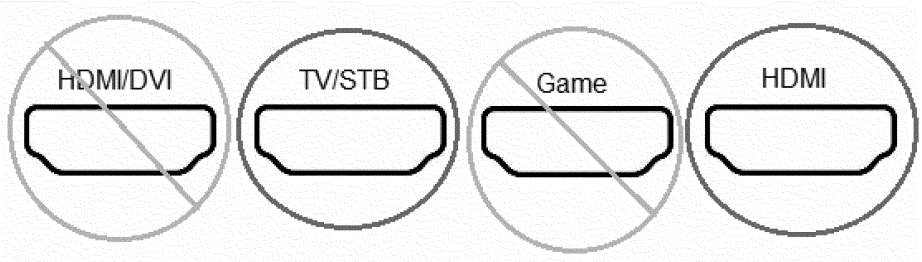

5.4. *Special Functions*. The TV shall be set up according to the requirements in section 11.4.6 of IEC 62087 Ed. 3.0 (incorporated by reference, see § 430.3).

5.5. *Special Function Configuration*. If at any time during on mode operation a message prompt is displayed requesting the configuration of special functions, the most power consumptive configuration shall be selected. If it is unknown which configuration yields the most power consumptive state, verify the selection by measuring the power consumption of each possible configuration.

NOTE: The selection of the home or retail configuration within the forced menu is not considered the configuration of a special function, and is therefore exempt from this requirement.

5.6. *On Mode Picture Setting*. Ensure that the TV is in the default picture setting within the home configuration for all on mode tests. This picture setting shall only be changed as instructed by the luminance test.

5.7. *Video Aspect Ratio*. The input video signal shall be configured in accordance with section 11.4.9 of IEC 62087 Ed. 3.0 (incorporated by reference; see § 430.3)

5.8. *Frame Rate*. The video frame rate shall be selected in accordance with section 11.4.10 of IEC 62087 Ed. 3.0 (incorporated by reference; see § 430.3)

5.9. *Sound level*. The TV sound level shall be configured in accordance with section 11.4.11 of IEC 62087 Ed. 3.0 (incorporated by reference; see § 430.3)

5.10. *Network Connection Configuration*.

5.10.1. *Network Connections and Capabilities*. Network connections should be listed in the user manual. If no connections are specified in the user manual, verify that the TV does not have network capabilities by checking for the absence of physical connections and the absence of network settings in the menu. If the TV has the capability to be connected to a network but was not shipped with a required piece of hardware (e.g. wireless adapter), that connection type shall not be tested.

5.10.2. *Network Configuration*. If the TV is network enabled, connect it to a LAN in on mode and prior to being placed into standby mode. The LAN shall allow devices to ping other devices on the network but will not allow access to a WAN. If the TV has multiple network connections (e.g., Wi-Fi and Ethernet), the TV shall be configured and connected to a single network source in accordance with the hierarchy of connections listed in Table 1 of this section.

TABLE 1—NETWORK CONNECTION HIERARCHY

Priority	Network connection type
1	Wi-Fi (Institution of Electrical and Electronics Engineers—IEEE 802.11–20072)
2	Ethernet (IEEE 802.3). If the TV supports Energy Efficient Ethernet (IEEE 802.3az–20103), then it shall be connected to a device that also supports IEEE 802.3az.

6. CALCULATION OF AVERAGE POWER CONSUMPTION

6.1. *Average Power Calculation*. For all tests in the on, standby-active, low, and standby-passive modes, the average power shall be calculated using one of the following two methods:

6.1.1. Record the accumulated energy (E_i) in kilo-watt hours (kWh) consumed over the time period specified for each test (T_i). The average power consumption is calculated as $P_i = E_i/T_i$.

6.1.2. Record the average power consumption (P_i) by sampling the power at a rate of at least 1 sample per second and computing the arithmetic mean of all samples over the time period specified for each test (T_i).

The resulting average power consumption value for each mode of operation shall be rounded according to the accurary requirements specified in section 3.3.3 of this section.

7. Test Measurements.

7.1. *On Mode Test*.

7.1.1. *On Mode Stabilization*. If the TV has an ABC sensor enabled by default, direct at least 300 lx into the ABC sensor. The TV shall be stabilized prior to testing on mode using the IEC 62087 Ed. 3.0 Blu-ray Disc™ dynamic broadcast-content video signal in accordance with section 11.4.2 of IEC 62087 Ed. 3.0 (incorporated by reference, see § 430.3).

7.1.2. *On Mode Test for TVs without ABC Enabled by Default*. The following test shall be performed if the TV is shipped with ABC disabled by default or the ABC function is unavailable. Display the IEC 62087 Ed. 3.0 Blu-ray Disc™ dynamic broadcast-content video signal for one 10-minute period (incorporated by reference, see § 430.3). Measure and record the average power consumption value over the test duration as P_{on}.

7.1.3. *On Mode Test for TVs with ABC Enabled by Default*. The following test shall be performed if the TV is shipped with ABC enabled by default:

7.1.3.1. *Illuminance Values*. Display the IEC 62087 Ed. 3.0 Blu-ray Disc™ dynamic broadcast-content video signal for one 10-minute period (incorporated by reference, see § 430.3) with 100 lx (± 5 lx) entering the ABC sensor. Measure and record the average power consumption value over the test duration as P_{100}. Repeat the measurements with 35 lx (± 2 lx), 12 lx (± 1 lx), and 3 lux (± 1 lx) entering the ABC sensor and record the values as P_{35}, P_{12}, and P_3 respectively. Testing shall be performed from the brightest to dimmest illuminance value and the values shall be changed by varying the input voltage to the light source.

NOTE: The 3 lx illuminance value shall be simulated using a 67 mm 2 F-stop neutral density filter. 12 lx is measured at the ABC sensor prior to the application of the neutral density filter.

7.1.3.2. *On Mode Power Calculation*. All illuminance values shall be weighted equally when calculating the on mode power for a TV with ABC enabled by default and shall be determined by the following equation:

$$P_{on} = P_{100} * W_{100} + P_{35} * W_{35} + P_{12} * W_{12} + P_3 * W_3$$

Where:

$W_{100} = W_{35} = W_{12} = W_3 = 0.25$

7.1.3.3. *Lamp Requirements*. A standard spectrum, halogen incandescent aluminized reflector lamp with a lamp diameter of 95 mm (±10 mm), a beam angle of 30 degrees (± 10 degrees), and a center beam candlepower of 1500 cd (± 500 cd) shall be positioned in front of the ABC sensor so that the light is directed into the sensor.

NOTE: Lamps with spectrum modifying qualities, such as an IR coating, are not considered to meet a standard spectrum.

7.1.3.4. *Light Source Set-up*. The center of the lamp shall measure 1.5 m (±0.1 m) from the center of the ABC sensor. The light source shall be aligned ensuring that the center focal point of the lamp is perpendicular to the center of the ABC sensor.

7.1.3.5. *Illuminance Measurement*. The room illuminance shall be measured at the sensor in the direction of the light source while the TV is on and displaying the first menu from the IEC 62087 Ed. 3.0 Blu-ray Disc™ dynamic broadcast-content video signal.

7.2. *Luminance Test*.

7.2.1. *Luminance Test Set-up*.

7.2.1.1. *Picture Setting Set-up*. When transitioning from the on mode power consumption test to the luminance test, the TV shall remain in the default picture setting within the home configuration for the first luminance measurement.

7.2.1.2. *ABC Configuration*. The ABC sensor shall be disabled at all times during the luminance test. If the ABC sensor is incapable of being disabled through the TV settings menu, direct at least 300 lx of light into the ABC sensor.

7.2.1.3. *Stabilization*. Prior to the first luminance measurement, the TV must undergo a 10-minute re-stabilization period using the IEC 62087 Ed. 3.0 Blu-ray Disc™ dynamic broadcast-content video signal.

7.2.2. *Luminance Meter Set-up*. Align the luminance meter perpendicular to the center of the TV screen. If a non-contact luminance meter is used to measure the screen luminance, the luminance measurement shall be

taken at a distance capable of meeting the meter specifications outlined in section 3.1.3, and in accordance with the meter's user manual.

7.2.3. *Three Vertical Bar Signal Measurement*. The IEC 62087 Ed. 3.0 three vertical bar signal found in section 11.5.5 of IEC 62087 Ed. 3.0 (incorporated by reference, see §430.3) shall be displayed for no more than 5 seconds when each luminance measurement is taken. The luminance measurement taken in the default picture setting within the home configuration shall be recorded as $L_{Default—Home}$.

7.2.4. *Luminance in the Brightest Selectable Preset Picture Setting*. Using the IEC 62087 Ed. 3.0 three vertical bar signal, determine the brightest selectable preset picture setting within the home configuration. Measure and record the screen luminance in the brightest selectable preset picture setting as $L_{Brightest—Home}$.

7.2.5. *Retail Configuration Luminance Measurement*. If the TV has a retail configuration and the retail configuration is acceptable for making a luminance measurement, measure and record the screen luminance in the default picture setting within the retail configuration as $L_{Default—Retail}$. A retail configuration is considered acceptable for a luminance measurement if the TV does not display a demo or ticker which alters the screen content, or if such features are present, they must be capable of being disabled for the entire re-stabilization period and measurement.

7.3. *Standby Mode Test*.

7.3.1. *Video Input Device*. The video input device shall be disconnected from the TV for all testing in standby mode.

7.3.2. *Standby-Passive Mode*. The standby-passive mode test shall be performed according to section 5.3.1 of IEC 62301 Ed. 2.0 (incorporated by reference, see §430.3). Measure and record the average power consumption value over the test duration as $P_{standby-passive}$.

7.3.3. *Standby-Active, Low Mode*. The standby-active, low mode shall only be tested if the TV is capable of connecting to a network and is capable of entering this mode of operation. The standby-active, low mode test shall be performed according to section 5.3.1 of IEC 62301 Ed. 2.0 (incorporated by reference, see §430.3). Measure and record the average power consumption value over the test duration as $P_{standby-active,low}$.

7.4. *Off Mode Test*.

7.4.1. The off mode test shall be performed according to section 5.3.1 of IEC 62301 Ed. 2.0 (incorporated by reference, see §430.3). Measure and record the average power consumption value over the test duration as P_{off}.

8. ANNUAL ENERGY CONSUMPTION

8.1. *Input Value*. The annual energy consumption (AEC) of the TV shall be calculated using on mode, standby mode, and off mode power consumption values as measured pursuant to section 7.1, 7.3, and 7.4 respectively.

8.2. *Rounding*. Calculate the AEC of the TV using the equation below. The calculated AEC value shall be rounded as follows:

If the calculated AEC value is 100 kWh or less, the rated value shall be rounded to the nearest tenth of a kWh;

If the calculated AEC value is greater than 100 kWh, the rated value shall be rounded to the nearest kWh.

8.3. *Calculations*. Express the AEC in kWh per year, according to the following:

$$AEC = 365 * (P_{on} * H_{on} + P_{standby-active,\ low} * H_{standby-active,\ low} + P_{standby-passive} * H_{standby-passive} + P_{off} * H_{off})/1000$$

Where:

P_m = power measured in a given mode *m* (in Watts)

H_m = hours per day spent in mode *m*

365 = conversion factor from daily to yearly

1000 = conversion factor from watts to kilowatts

Values for H_m (in hours/day) are specified in Table 2 of this section:

TABLE 2—HOURLY WEIGHTINGS

Standby-active, low mode	H_{on}	$H_{standby-active,\ low}$	$H_{standby-passive}$	H_{off}
Yes	5	19	0	0
No	5	0	19	0

[78 FR 63841, Oct. 25, 2013]

APPENDIX I TO SUBPART B OF PART 430—UNIFORM TEST METHOD FOR MEASURING THE ENERGY CONSUMPTION OF CONVENTIONAL RANGES, CONVENTIONAL COOKING TOPS, CONVENTIONAL OVENS, AND MICROWAVE OVENS

NOTE: Any representation made after April 29, 2013 related to standby mode and off mode energy consumption of conventional ranges, conventional cooking tops, and conventional ovens, or after July 17, 2013 for standby and off mode energy consumption of microwave ovens, must be based upon results generated under this test procedure.

Any representation related to standby mode and off mode energy consumption of microwave ovens made between February 19, 2013 and July 17, 2013 may be based upon results generated under this test procedure or upon the test procedure as it appeared at 10 CFR part 430, subpart B, appendix I as contained in the 10 CFR parts 200 to 499 edition revised as of January 1, 2012.

Upon the compliance date(s) of any energy conservation standard(s) for conventional

ranges, conventional cooking tops, conventional ovens, and microwave ovens that incorporates standby mode and off mode energy consumption, use of the applicable provisions of this test procedure to demonstrate compliance with the energy conservation standard will also be required.

1. DEFINITIONS

1.1 *Active mode* means a mode in which the product is connected to a mains power source, has been activated, and is performing the main functions of producing heat by means of a gas flame, electric resistance heating, or microwave energy, or circulating air internally or externally to the cooking product. Delay start mode is a one-off, user-initiated, short-duration function that is associated with an active mode.

1.2 *Built-in* means the product is supported by surrounding cabinetry, walls, or other similar structures.

1.3 *Combined low-power mode* means the aggregate of available modes other than active mode, but including the delay start mode portion of active mode.

1.4 *Cycle finished mode* means a standby mode in which a conventional cooking top, conventional oven, or conventional range provides continuous status display following operation in active mode.

1.5 *Drop-in* means the product is supported by horizontal surface cabinetry.

1.6 *Fan-only mode* means an active mode that is not user-selectable and in which a fan circulates air internally or externally to the cooking product for a finite period of time after the end of the heating function, where the end of the heating function is indicated to the consumer by means of a display, indicator light, or audible signal.

1.7 *Forced convection* means a mode of conventional oven operation in which a fan is used to circulate the heated air within the oven compartment during cooking.

1.8 *Freestanding* means the product is not supported by surrounding cabinetry, walls, or other similar structures.

1.9 *IEC 62301 (First Edition)* means the test standard published by the International Electrotechnical Commission, titled ''Household electrical appliances—Measurement of standby power,'' Publication 62301 (First Edition 2005–06) (incorporated by reference; see § 430.3).

1.10 *IEC 62301 (Second Edition)* means the test standard published by the International Electrotechnical Commission, titled ''Household electrical appliances—Measurement of standby power,'' Publication 62301 (Edition 2.0 2011–01) (incorporated by reference; see § 430.3).

1.11 *Inactive mode* means a standby mode that facilitates the activation of active mode by remote switch (including remote control), internal sensor, or timer, or that provides continuous status display.

1.12 *Normal non-operating temperature* means the temperature of all areas of an appliance to be tested are within 5 °F (2.8 °C) of the temperature that the identical areas of the same basic model of the appliance would attain if it remained in the test room for 24 hours while not operating with all oven doors closed.

1.13 *Off mode* means a mode in which the product is connected to a mains power source and is not providing any active mode or standby mode function, and where the mode may persist for an indefinite time. An indicator that only shows the user that the product is in the off position is included within the classification of an off mode.

1.14 *Primary energy consumption* means either the electrical energy consumption of a conventional electric oven or the gas energy consumption of a conventional gas oven.

1.15 *Secondary energy consumption* means any electrical energy consumption of a conventional gas oven.

1.16 *Standard cubic foot (or liter (L)) of gas* means that quantity of gas that occupies 1 cubic foot (or alternatively expressed in L) when saturated with water vapor at a temperature of 60 °F (15.6 °C) and a pressure of 30 inches of mercury (101.6 kPa) (density of mercury equals 13.595 grams per cubic centimeter).

1.17 *Standby mode* means any mode in which a conventional cooking top, conventional oven, conventional range, or microwave oven is connected to a main power source and offers one or more of the following user-oriented or protective functions which may persist for an indefinite time: (a) facilitation of the activation of other modes (including activation or deactivation of active mode) by remote switch (including remote control), internal sensor, or timer; (b) provision of continuous functions, including information or status displays (including clocks) or sensor-based functions. A timer is a continuous clock function (which may or may not be associated with a display) that allows for regularly scheduled tasks and that operates on a continuous basis.

1.18 *Thermocouple* means a device consisting of two dissimilar metals which are joined together and, with their associated wires, are used to measure temperature by means of electromotive force.

1.19 *Symbol usage.* The following identity relationships are provided to help clarify the symbology used throughout this procedure.

A—Number of Hours in a Year
C—Specific Heat
E—Energy Consumed
Eff—Cooking Efficiency
H—Heating Value of Gas
K—Conversion for Watt-hours to Kilowatt-hours
K_e—3.412 Btu/Wh, Conversion for Watt-hours to Btu's
M—Mass

n—Number of Units
O—Annual Useful Cooking Energy Output
P—Power
Q—Gas Flow Rate
R—Energy Factor, Ratio of Useful Cooking Energy Output to Total Energy Input
S—Number of Self-Cleaning Operations per Year
T—Temperature
t—Time
V—Volume of Gas Consumed
W—Weight of Test Block

2. TEST CONDITIONS

2.1 *Installation*. A free standing kitchen range shall be installed with the back directly against, or as near as possible to, a vertical wall which extends at least 1 foot above and on either side of the appliance. There shall be no side walls. A drop-in, built-in, or wall-mounted appliance shall be installed in an enclosure in accordance with the manufacturer's instructions. These appliances are to be completely assembled with all handles, knobs, guards, and the like mounted in place. Any electric resistance heaters, gas burners, baking racks, and baffles shall be in place in accordance with the manufacturer's instructions; however, broiler pans are to be removed from the oven's baking compartment.

2.1.1 *Conventional electric ranges, ovens, and cooking tops*. These products shall be connected to an electrical supply circuit with voltage as specified in section 2.2.1 of this appendix with a watt-hour meter installed in the circuit. The watt-hour meter shall be as described in section 2.9.1.1 of this appendix. For standby mode and off mode testing, these products shall also be installed in accordance with Section 5, Paragraph 5.2 of IEC 62301 (Second Edition) (incorporated by reference; see §430.3), disregarding the provisions regarding batteries and the determination, classification, and testing of relevant modes.

2.1.2 *Conventional gas ranges, ovens, and cooking tops*. These products shall be connected to a gas supply line with a gas meter installed between the supply line and the appliance being tested, according to manufacturer's specifications. The gas meter shall be as described in section 2.9.2 of this appendix. Conventional gas ranges, ovens, and cooking tops with electrical ignition devices or other electrical components shall be connected to an electrical supply circuit of nameplate voltage with a watt-hour meter installed in the circuit. The watt-hour meter shall be as described in section 2.9.1.1 of this appendix. For standby mode and off mode testing, these products shall also be installed in accordance with Section 5, Paragraph 5.2 of IEC 62301 (Second Edition) (incorporated by reference; see §430.3), disregarding the provisions regarding batteries and the determination, classification, and testing of relevant modes.

2.1.3 *Microwave ovens*. Install the microwave oven in accordance with the manufacturer's instructions and connect to an electrical supply circuit with voltage as specified in section 2.2.1 of this appendix. The microwave oven shall also be installed in accordance with Section 5, Paragraph 5.2 of IEC 62301 (Second Edition) (incorporated by reference; see §430.3), disregarding the provisions regarding batteries and the determination, classification, and testing of relevant modes. A watt meter shall be installed in the circuit and shall be as described in section 2.9.1.3 of this appendix.

2.2 *Energy supply*.

2.2.1 *Electrical supply*.

2.2.1.1 *Voltage*. Maintain the electrical supply to the conventional range, conventional cooking top, and conventional oven being tested at 240/120 volts ±2 percent except that basic models rated only at 208/120 volts shall be tested at that rating ±2 percent. For microwave oven testing, maintain the electrical supply to the unit at 240/120 volts ±1 percent. Maintain the electrical supply frequency for all products at 60 hertz ±1 percent.

2.2.1.2 *Supply voltage waveform*. For the standby mode and off mode testing, maintain the electrical supply voltage waveform as indicated in Section 4, Paragraph 4.3.2 of IEC 62301 (Second Edition) (incorporated by reference; see §430.3). For microwave oven standby mode and off mode testing, if the power measuring instrument used for testing is unable to measure and record the total harmonic content during the test measurement period, it is acceptable to measure and record the total harmonic content immediately before and after the test measurement period.

2.2.2.1 *Gas burner adjustments*. Conventional gas ranges, ovens, and cooking tops shall be tested with all of the gas burners adjusted in accordance with the installation or operation instructions provided by the manufacturer. In every case, the burner must be adjusted with sufficient air flow to prevent a yellow flame or a flame with yellow tips.

2.2.2.2 *Natural gas*. For testing convertible cooking appliances or appliances which are designed to operate using only natural gas, maintain the natural gas pressure immediately ahead of all controls of the unit under test at 7 to 10 inches of water column (1743.6 to 2490.8 Pa). The regulator outlet pressure shall equal the manufacturer's recommendation. The natural gas supplied should have a heating value of approximately 1,025 Btu's per standard cubic foot (38.2 kJ/L). The actual gross heating value, H_n, in Btu's per standard cubic foot (kJ/L), for the natural gas to be used in the test shall be obtained either from measurements made by the manufacturer conducting the

test using equipment that meets the requirements described in Section 2.9.4 or by the use of bottled natural gas whose gross heating value is certified to be at least as accurate a value that meets the requirements in Section 2.9.4.

2.2.2.3 *Propane*. For testing convertible cooking appliances with propane or for testing appliances which are designed to operate using only LP-gas, maintain the propane pressure immediately ahead of all controls of the unit under test at 11 to 13 inches of water column (2740 to 3238 Pa). The regulator outlet pressure shall equal the manufacturer's recommendation. The propane supplied should have a heating value of approximately 2,500 Btu's per standard cubic foot (93.2 kJ/L). The actual gross heating value, H_p, in Btu's per standard cubic foot (kJ/L), for the propane to be used in the test shall be obtained either from measurements made by the manufacturer conducting the test using equipment that meets the requirements described in Section 2.9.4 or by the use of bottled propane whose gross heating value is certified to be at least as accurate a value that meets the requirements described in Section 2.9.4.

2.2.2.4 *Test gas*. A basic model of a convertible cooking appliance shall be tested with natural gas, but may also be tested with propane. Any basic model of a conventional range, conventional cooking top, or conventional oven which is designed to operate using only natural gas as the energy source must be tested with natural gas. Any basic model of a conventional range, conventional cooking top, or conventional oven which is designed to operate using only LP gas as the gas energy source must be tested with propane gas.

2.3 *Air circulation*. Maintain air circulation in the room sufficient to secure a reasonably uniform temperature distribution, but do not cause a direct draft on the unit under test.

2.4 *Setting the conventional oven thermostat*.

2.4.1 *Conventional electric oven*. Install a thermocouple approximately in the center of the usable baking space. Provide a temperature indicator system for measuring the oven's temperature with an accuracy as indicated in Section 2.9.3.2. If the oven thermostat does not cycle on and off, adjust or determine the conventional electric oven thermostat setting to provide an average internal temperature which is 325° ±5 °F (180.6° ±2.8 °C) higher than the room ambient air temperature. If the oven thermostat operates by cycling on and off, adjust or determine the conventional electric oven thermostat setting to provide an average internal temperature which is 325° ±5 °F (180.6° ±2.8 °C) higher than the room ambient air temperature. This shall be done by measuring the maximum and minimum temperatures in any three consecutive cut-off/cut-on actions of the electric resistance heaters, excluding the initial cut-off/cut-on action, by the thermostat after the temperature rise of 325° ±5 °F (180.6° ±2.8 °C) has been attained by the conventional electric oven. Remove the thermocouple after the thermostat has been set.

2.4.2 *Conventional gas oven*. Install five parallel-connected weighted thermocouples, one located at the center of the conventional gas oven's usable baking space and the other four equally spaced between the center and the corners of the conventional gas oven on the diagonals of a horizontal plane through the center of the conventional gas oven. Each weighted thermocouple shall be constructed of a copper disc that is 1-inch (25.4 mm) in diameter and ⅛-inch (3.2 mm) thick. The two thermocouple wires shall be located in two holes in the disc spaced ½-inch (12.7 mm) apart, with each hole being located ¼-inch (6.4 mm) from the center of the disc. Both thermocouple wires shall be silver-soldered to the copper disc. Provide a temperature indicator system for measuring the oven's temperature with an accuracy as indicated in Section 2.9.3.2. If the oven thermostat does not cycle on or off, adjust or determine the conventional gas oven thermostat setting to provide an average internal temperature which is 325 °±5 °F (180.6 °±2.8 °C) higher than the room ambient air temperature. If the oven thermostat operates by cycling on and off, adjust or determine the conventional gas oven thermostat setting to provide an average internal temperature which is 325° ±5 °F (180.6 ±2.8 °C) higher than the room ambient air temperature. This shall be done by measuring the maximum and minimum temperatures in any three consecutive cut-off/cut-on actions of the gas burners, excluding the initial cut-off/cut-on action, by the thermostat after the temperature rise of 325° ±5 °F (180.6° ±2.8 °C) has been attained by the conventional gas oven. Remove the thermocouples after the thermostat has been set.

2.5 *Ambient room air temperature*.

2.5.1 *Active mode ambient room air temperature*. During the active mode test, maintain an ambient room air temperature, T_R, of 77° ±9 °F (25° ±5 °C) for conventional ovens and cooking tops, as measured at least 5 feet (1.5 m) and not more than 8 feet (2.4 m) from the nearest surface of the unit under test and approximately 3 feet (0.9 m) above the floor. The temperature shall be measured with a thermometer or temperature indicating system with an accuracy as specified in section 2.9.3.1.

2.5.2 *Standby mode and off mode ambient temperature*. For standby mode and off mode testing, maintain room ambient air temperature conditions as specified in Section 4, Paragraph 4.2 of IEC 62301 (Second Edition) (incorporated by reference; see §430.3).

2.6 *Normal nonoperating temperature*. All areas of the appliance to be tested shall attain the normal nonoperating temperature,

as defined in section 1.12 of this appendix, before any testing begins. The equipment for measuring the applicable normal nonoperating temperature shall be as described in sections 2.9.3.1, 2.9.3.2, 2.9.3.3, and 2.9.3.4 of this appendix, as applicable.

2.7 *Test blocks for conventional oven and cooking top.* The test blocks shall be made of aluminum alloy No. 6061, with a specific heat of 0.23 Btu/lb- °F (0.96 kJ/[kg ÷ °C]) and with any temper that will give a czoefficient of thermal conductivity of 1073.3 to 1189.1 Btu-in/h-ft^2- °F (154.8 to 171.5 W/[m ÷ °C]). Each block shall have a hole at its top. The hole shall be 0.08 inch (2.03 mm) in diameter and 0.80 inch (20.3 mm) deep. The manufacturer conducting the test may provide other means which will ensure that the thermocouple junction is installed at this same position and depth.

The bottom of each block shall be flat to within 0.002 inch (0.051 mm) TIR (total indicator reading). Determine the actual weight of each test block with a scale with an accuracy as indicated in Section 2.9.5.

2.7.1 *Conventional oven test block.* The test block for the conventional oven, W_1, shall be 6.25±0.05 inches (158.8±1.3 mm) in diameter, approximately 2.8 inches (71 mm) high and shall weigh 8.5±0.1 lbs (3.86±0.05 kg). The block shall be finished with an anodic black coating which has a minimum thickness of 0.001 inch (0.025 mm) or with a finish having the equivalent absorptivity.

2.7.2 *Small test block for conventional cooking top.* The small test block, W_2, shall be 6.25±0.05 inches (158.8±1.3 mm) in diameter, approximately 2.8 inches (71 mm) high and shall weigh 8.5±0.1 lbs (3.86±0.05 kg).

2.7.3 *Large test block for conventional cooking top.* The large test block for the conventional cooking top, W_3, shall be 9±0.05 inches (228.6±1.3 mm) in diameter, approximately 3.0 inches (76 mm) high and shall weigh 19±0.1 lbs (8.62±0.05 kg).

2.7.4 *Thermocouple installation.* Install the thermocouple such that the thermocouple junction (where the thermocouple contacts the test block) is at the bottom of the hole provided in the test block and that the thermocouple junction makes good thermal contact with the aluminum block. If the test blocks are to be water cooled between tests the thermocouple hole should be sealed, or other steps taken, to insure that the thermocouple hole is completely dry at the start of the next test. Provide a temperature indicator system for measuring the test block temperature with an accuracy as indicated in Section 2.9.3.3.

2.7.5 *Initial test block temperature.* Maintain the initial temperature of the test blocks, T_I, within ±4 °F (±2.2 °C) of the ambient room air temperature as specified in Section 2.5. If the test block has been cooled (or heated) to bring it to room temperature, allow the block to stabilize for at least 2 minutes after removal from the cooling (or heating) source, before measuring its initial temperature.

2.8 [Reserved]

2.9 *Instrumentation.* Perform all test measurements using the following instruments, as appropriate:

2.9.1 *Electrical Measurements.*

2.9.1.1 *Watt-hour meter.* The watt-hour meter for measuring the electrical energy consumption of conventional ovens and cooking tops shall have a resolution of 1 watt-hour (3.6 kJ) or less and a maximum error no greater than 1.5 percent of the measured value for any demand greater than 5 watts. The watt-hour meter for measuring the energy consumption of microwave ovens shall have a resolution of 0.1 watt-hour (0.36 kJ) or less and a maximum error no greater than 1.5 percent of the measured value.

2.9.1.2 *Watt meter.* The watt meter used to measure the conventional oven, conventional range, or range clock power shall have a resolution of 0.2 watt (0.2 J/s) or less and a maximum error no greater than 5 percent of the measured value.

2.9.1.3 *Standby mode and off mode watt meter.* The watt meter used to measure standby mode and off mode shall meet the requirements specified in Section 4, Paragraph 4.4 of IEC 62301 (Second Edition) (incorporated by reference; see §430.3). For microwave oven standby mode and off mode testing, if the power measuring instrument used for testing is unable to measure and record the crest factor, power factor, or maximum current ratio during the test measurement period, it is acceptable to measure the crest factor, power factor, and maximum current ratio immediately before and after the test measurement period.

2.9.2 *Gas Measurements.*

2.9.2.1 *Positive displacement meters.* The gas meter to be used for measuring the gas consumed by the gas burners of the oven or cooking top shall have a resolution of 0.01 cubic foot (0.28 L) or less and a maximum error no greater than 1 percent of the measured valued for any demand greater than 2.2 cubic feet per hour (62.3 L/h).

2.9.3 *Temperature measurement equipment.*

2.9.3.1 *Room temperature indicating system.* The room temperature indicating system shall be as specified in Section 2.9.3.4 for ranges, ovens and cooktops.

2.9.3.2 *Temperature indicator system for measuring conventional oven temperature.* The equipment for measuring the conventional oven temperature shall have an error no greater than ±4 °F (±2.2 °C) over the range of 65° to 500 °F (18 °C to 260 °C).

2.9.3.3 *Temperature indicator system for measuring test block temperature.* The system shall have an error no greater than ±2 °F (±1.1 °C) when measuring specific temperatures over the range of 65° to 330 °F (18.3 °C to 165.6 °C). It shall also have an error no greater than ±2

°F (±1.1 °C) when measuring any temperature difference up to 240 °F (133.3 °C) within the above range.

2.9.3.4 *Temperature indicator system for measuring surface temperatures.* The temperature of any surface of an appliance shall be measured by means of a thermocouple in firm contact with the surface. The temperature indicating system shall have an error no greater than ±1 °F (±0.6 °C) over the range 65° to 90 °F (18 °C to 32 °C).

2.9.4 *Heating Value.* The heating value of the natural gas or propane shall be measured with an instrument and associated readout device that has a maximum error no greater than ±0.5% of the measured value and a resolution of ±0.2% or less of the full scale reading of the indicator instrument. The heating value of natural gas or propane must be corrected for local temperature and pressure conditions.

2.9.5 *Scale.* The scale used for weighing the test blocks shall have a maximum error no greater than 1 ounce (28.4 g).

3. Test Methods and Measurements

3.1. *Test methods.*

3.1.1 *Conventional oven.* Perform a test by establishing the testing conditions set forth in section 2, *Test Conditions,* of this appendix and turn off the gas flow to the conventional cooking top, if so equipped. Before beginning the test, the conventional oven shall be at its normal non-operating temperature as defined in section 1.12 and described in section 2.6 of this appendix. Set the conventional oven test block W_1 approximately in the center of the usable baking space. If there is a selector switch for selecting the mode of operation of the oven, set it for normal baking. If an oven permits baking by either forced convection by using a fan, or without forced convection, the oven is to be tested in each of those two modes. The oven shall remain on for one complete thermostat ''cut-off/cut-on'' of the electrical resistance heaters or gas burners after the test block temperature has increased 234 °F (130 °C) above its initial temperature.

3.1.1.1 *Self-cleaning operation of a conventional oven.* Establish the test conditions set forth in section 2, *Test Conditions,* of this appendix. Turn off the gas flow to the conventional cooking top. The temperature of the conventional oven shall be its normal non-operating temperature as defined in section 1.12 and described in section 2.6 of this appendix. Then set the conventional oven's self-cleaning process in accordance with the manufacturer's instructions. If the self-cleaning process is adjustable, use the average time recommended by the manufacturer for a moderately soiled oven.

3.1.1.2 *Conventional oven standby mode and off mode power.* Establish the standby mode and off mode testing conditions set forth in section 2, *Test Conditions,* of this appendix. For conventional ovens that take some time to enter a stable state from a higher power state as discussed in Section 5, Paragraph 5.1, Note 1 of IEC 62301 (Second Edition) (incorporated by reference; see §430.3), allow sufficient time for the conventional oven to reach the lower power state before proceeding with the test measurement. Follow the test procedure as specified in Section 5, Paragraph 5.3.2 of IEC 62301 (Second Edition) for testing in each possible mode as described in 3.1.1.2.1 and 3.1.1.2.2 of this appendix. For units in which power varies as a function of displayed time in standby mode, set the clock time to 3:23 at the end of the stabilization period specified in Section 5, Paragraph 5.3 of IEC 62301 (First Edition), and use the average power approach described in Section 5, Paragraph 5.3.2(a) of IEC 62301 (First Edition), but with a single test period of 10 minutes +0/−2 sec after an additional stabilization period until the clock time reaches 3:33.

3.1.1.2.1 If the conventional oven has an inactive mode, as defined in section 1.11 of this appendix, measure and record the average inactive mode power of the conventional oven, P_{IA}, in watts.

3.1.1.2.2 If the conventional oven has an off mode, as defined in section 1.13 of this appendix, measure and record the average off mode power of the conventional oven, P_{OM}, in watts.

3.1.2 *Conventional cooking top.* Establish the test conditions set forth in section 2, *Test Conditions,* of this appendix. Turn off the gas flow to the conventional oven(s), if so equipped. The temperature of the conventional cooking top shall be its normal nonoperating temperature as defined in section 1.12 and described in section 2.6 of this appendix. Set the test block in the center of the surface unit under test. The small test block, W_2, shall be used on electric surface units of 7 inches (178 mm) or less in diameter. The large test block, W_3, shall be used on electric surface units over 7 inches (178 mm) in diameter and on all gas surface units. Turn on the surface unit under test and set its energy input rate to the maximum setting. When the test block reaches 144 °F (80 °C) above its initial test block temperature, immediately reduce the energy input rate to 25±5 percent of the maximum energy input rate. After 15±0.1 minutes at the reduced energy setting, turn off the surface unit under test.

3.1.2.1 *Conventional cooking top standby mode and off mode power.* Establish the standby mode and off mode testing conditions set forth in section 2, *Test Conditions,* of this appendix. For conventional cooktops that take some time to enter a stable state from a higher power state as discussed in Section 5, Paragraph 5.1, Note 1 of IEC 62301 (Second Edition) (incorporated by reference; see

§ 430.3), allow sufficient time for the conventional cooking top to reach the lower power state before proceeding with the test measurement. Follow the test procedure as specified in Section 5, Paragraph 5.3.2 of IEC 62301 (Second Edition) for testing in each possible mode as described in sections 3.1.2.1.1 and 3.1.2.1.2 of this appendix. For units in which power varies as a function of displayed time in standby mode, set the clock time to 3:23 at the end of the stabilization period specified in Section 5, Paragraph 5.3 of IEC 62301 (First Edition), and use the average power approach described in Section 5, Paragraph 5.3.2(a) of IEC 62301 (First Edition), but with a single test period of 10 minutes +0/-2 sec after an additional stabilization period until the clock time reaches 3:33.

3.1.2.1.1 If the conventional cooking top has an inactive mode, as defined in section 1.11 of this appendix, measure and record the average inactive mode power of the conventional cooking top, P_{IA}, in watts.

3.1.2.1.2 If the conventional cooking top has an off mode, as defined in section 1.13 of this appendix, measure and record the average off mode power of the conventional cooking top, P_{OM}, in watts.

3.1.3 *Conventional range standby mode and off mode power.* Establish the standby mode and off mode testing conditions set forth in section 2, *Test Conditions,* of this appendix. For conventional ranges that take some time to enter a stable state from a higher power state as discussed in Section 5, Paragraph 5.1, Note 1 of IEC 62301 (Second Edition) (incorporated by reference; see § 430.3), allow sufficient time for the conventional range to reach the lower power state before proceeding with the test measurement. Follow the test procedure as specified in Section 5, Paragraph 5.3.2 of IEC 62301 (Second Edition) for testing in each possible mode as described in sections 3.1.3.1 and 3.1.3.2 of this appendix. For units in which power varies as a function of displayed time in standby mode, set the clock time to 3:23 at the end of the stabilization period specified in Section 5, Paragraph 5.3 of IEC 62301 (First Edition), and use the average power approach described in Section 5, Paragraph 5.3.2(a) of IEC 62301 (First Edition), but with a single test period of 10 minutes +0/−2 sec after an additional stabilization period until the clock time reaches 3:33.

3.1.3.1 If the conventional range has an inactive mode, as defined in section 1.11 of this appendix, measure and record the average inactive mode power of the conventional range, P_{IA}, in watts.

3.1.3.2 If the conventional range has an off mode, as defined in section 1.13 of this appendix, measure and record the average off mode power of the conventional range, P_{OM}, in watts.

3.1.4 *Microwave oven.*

3.1.4.1 *Microwave oven test standby mode and off mode power.* Establish the testing conditions set forth in section 2, *Test Conditions,* of this appendix. For microwave ovens that drop from a higher power state to a lower power state as discussed in Section 5, Paragraph 5.1, Note 1 of IEC 62301 (Second Edition) (incorporated by reference; see § 430.3), allow sufficient time for the microwave oven to reach the lower power state before proceeding with the test measurement. Follow the test procedure as specified in Section 5, Paragraph 5.3.2 of IEC 62301 (Second Edition). For units in which power varies as a function of displayed time in standby mode, set the clock time to 3:23 and use the average power approach described in Section 5, Paragraph 5.3.2(a) of IEC 62301 (First Edition), but with a single test period of 10 minutes +0/−2 sec after an additional stabilization period until the clock time reaches 3:33. If a microwave oven is capable of operation in either standby mode or off mode, as defined in sections 1.17 and 1.13 of this appendix, respectively, or both, test the microwave oven in each mode in which it can operate.

3.2 *Test measurements.*

3.2.1 *Conventional oven test energy consumption.* If the oven thermostat controls the oven temperature without cycling on and off, measure the energy consumed, E_O, when the temperature of the block reaches T_O (T_O is 234 °F (130 °C) above the initial block temperature, T_I). If the oven thermostat operates by cycling on and off, make the following series of measurements: Measure the block temperature, T_A, and the energy consumed, E_A, or volume of gas consumed, V_A, at the end of the last ''ON'' period of the conventional oven before the block reaches T_O. Measure the block temperature, T_B, and the energy consumed, E_B, or volume of gas consumed, V_B, at the beginning of the next ''ON'' period. Measure the block temperature, T_C, and the energy consumed, E_C, or volume of gas consumed, V_C, at the end of that ''ON'' period. Measure the block temperature, T_D, and the energy consumed, E_D, or volume of gas consumed, V_D, at the beginning of the following ''ON'' period. Energy measurements for E_O, E_A, E_B, E_C, and E_D should be expressed in watt-hours (kJ) for conventional electric ovens, and volume measurements for V_A, V_B, V_C, and V_D should be expressed in standard cubic feet (L) of gas for conventional gas ovens. For a gas oven, measure in watt-hours (kJ) any electrical energy, E_{IO}, consumed by an ignition device or other electrical components required for the operation of a conventional gas oven while heating the test block to T_O.

3.2.1.1 *Conventional oven average test energy consumption.* If the conventional oven permits baking by either forced convection or without forced convection and the oven thermostat does not cycle on and off, measure

the energy consumed with the forced convection mode, $(E_O)_1$, and without the forced convection mode, $(E_O)_2$, when the temperature of the block reaches T_O (T_O is 234 °F (130 °C) above the initial block temperature, T_I). If the conventional oven permits baking by either forced convection or without forced convection and the oven thermostat operates by cycling on and off, make the following series of measurements with and without the forced convection mode: Measure the block temperature, T_A, and the energy consumed, E_A, or volume of gas consumed, V_A, at the end of the last ''ON'' period of the conventional oven before the block reaches T_O. Measure the block temperature, T_B, and the energy consumed, E_B, or volume of gas consumed, V_B, at the beginning of the next ''ON'' period. Measure the block temperature, T_C, and the energy consumed, E_C, or volume of gas consumed, V_C, at the end of that ''ON'' period. Measure the block temperature, T_D, and the energy consumed, E_D, or volume of gas consumed, V_D, at the beginning of the following ''ON'' period. Energy measurements for E_O, E_A, E_B, E_C, and E_D should be expressed in watt-hours (kJ) for conventional electric ovens, and volume measurements for V_A, V_B, V_C, and V_D should be expressed in standard cubic feet (L) of gas for conventional gas ovens. For a gas oven that can be operated with or without forced convection, measure in watt-hours (kJ) any electrical energy consumed by an ignition device or other electrical components required for the operation of a conventional gas oven while heating the test block to T_O using the forced convection mode, $(E_{IO})_1$, and without using the forced convection mode, $(E_{IO})_2$.

3.2.1.2 *Conventional oven fan-only mode energy consumption.* If the conventional oven is capable of operation in fan-only mode, measure the fan-only mode energy consumption, E_{OF}, expressed in kilowatt-hours (kJ) of electricity consumed by the conventional oven for the duration of fan-only mode, using a watt-hour meter as specified in section 2.9.1.1 of this appendix. Alternatively, if the duration of fan-only mode is known, the watt-hours consumed may be measured for a period of 10 minutes in fan-only mode, using a watt-hour meter as specified in section 2.9.1.1 of this appendix. Multiply this value by the time in minutes that the conventional oven remains in fan-only mode, t_{OF}, and divide by 10,000 to obtain E_{OF}. The alternative approach may be used only if the resulting E_{OF} is representative of energy use during the entire fan-only mode.

3.2.1.3 *Energy consumption of self-cleaning operation.* Measure the energy consumption, E_S, in watt-hours (kJ) of electricity or the volume of gas consumption, V_S, in standard cubic feet (L) during the self-cleaning test set forth in section 3.1.1.1 of this appendix. For a gas oven, also measure in watt-hours (kJ) any electrical energy, E_{IS}, consumed by ignition devices or other electrical components required during the self-cleaning test.

3.2.1.4 *Standby mode and off mode energy consumption.* Make measurements as specified in section 3.1.1.2 of this appendix. If the conventional oven is capable of operating in inactive mode, as defined in section 1.11 of this appendix, measure the average inactive mode power of the conventional oven, P_{IA}, in watts as specified in section 3.1.1.2.1 of this appendix. If the conventional oven is capable of operating in off mode, as defined in section 1.13 of this appendix, measure the average off mode power of the conventional oven, P_{OM}, in watts as specified in section 3.1.1.2.2 of this appendix.

3.2.2 *Conventional surface unit test energy consumption.*

3.2.2.1 *Conventional surface unit average test energy consumption.* For the surface unit under test, measure the energy consumption, E_{CT}, in watt-hours (kJ) of electricity or the volume of gas consumption, V_{CT}, in standard cubic feet (L) of gas and the test block temperature, T_{CT}, at the end of the 15 minute (reduced input setting) test interval for the test specified in section 3.1.2 of this appendix and the total time, t_{CT}, in hours, that the unit is under test. Measure any electrical energy, E_{IC}, consumed by an ignition device of a gas heating element or other electrical components required for the operation of the conventional gas cooking top in watt-hours (kJ).

3.2.2.2 *Conventional surface unit standby mode and off mode energy consumption.* Make measurements as specified in section 3.1.2.1 of this appendix. If the conventional surface unit is capable of operating in inactive mode, as defined in section 1.11 of this appendix, measure the average inactive mode power of the conventional surface unit, P_{IA}, in watts as specified in section 3.1.2.1.1 of this appendix. If the conventional surface unit is capable of operating in off mode, as defined in section 1.13 of this appendix, measure the average off mode power of the conventional surface unit, P_{OM}, in watts as specified in section 3.1.2.1.2 of this appendix.

3.2.3 *Conventional range standby mode and off mode energy consumption.* Make measurements as specified in section 3.1.3 of this appendix. If the conventional range is capable of operating in inactive mode, as defined in section 1.11 of this appendix, measure the average inactive mode power of the conventional range, P_{IA}, in watts as specified in section 3.1.3.1 of this appendix. If the conventional range is capable of operating in off mode, as defined in section 1.13 of this appendix, measure the average off mode power of the conventional range, P_{OM}, in watts as specified in section 3.1.3.2 of this appendix.

3.2.4 *Microwave oven test standby mode and off mode power.* Make measurements as specified in Section 5, Paragraph 5.3 of IEC 62301

(Second Edition) (incorporated by reference; see §430.3). If the microwave oven is capable of operating in standby mode, as defined in section 1.17 of this appendix, measure the average standby mode power of the microwave oven, P_{SB}, in watts as specified in section 3.1.4.1 of this appendix. If the microwave oven is capable of operating in off mode, as defined in section 1.13 of this appendix, measure the average off mode power of the microwave oven, P_{OM}, as specified in section 3.1.4.1.

3.3 *Recorded values.*

3.3.1 Record the test room temperature, T_R, at the start and end of each range, oven or cooktop test, as determined in Section 2.5.

3.3.2 Record measured test block weights W_1, W_2, and W_3 in pounds (kg).

3.3.3 Record the initial temperature, T_1, of the test block under test.

3.3.4 For a conventional oven with a thermostat which operates by cycling on and off, record the conventional oven test measurements T_A, E_A, T_B, E_B, T_C, E_C, T_D, and E_D for conventional electric ovens or T_A, V_A, T_B, V_B, T_C, V_C, T_D, and V_D for conventional gas ovens. If the thermostat controls the oven temperature without cycling on and off, record E_O. For a gas oven which also uses electrical energy for the ignition or operation of the oven, also record E_{IO}.

3.3.5 For a conventional oven that can be operated with or without forced convection and the oven thermostat controls the oven temperature without cycling on and off, measure the energy consumed with the forced convection mode, $(E_O)_1$, and without the forced convection mode, $(E_O)_2$. If the conventional oven operates with or without forced convection and the thermostat controls the oven temperature by cycling on and off, record the conventional oven test measurements T_A, E_A, T_B, E_B, T_C, E_C, T_D, and E_D for conventional electric ovens or T_A, V_A, T_B, V_B, T_C, V_C, T_D, and V_D for conventional gas ovens. For a gas oven that can be operated with or without forced convection, measure any electrical energy consumed by an ignition device or other electrical components used during the forced convection mode, $(E_{IO})_1$, and without using the forced convection mode, $(E_{IO})_2$.

3.3.6 Record the measured energy consumption, E_S, or gas consumption, V_S, and for a gas oven, any electrical energy, E_{IS}, for the test of the self-cleaning operation of a conventional oven.

3.3.7 For conventional ovens, record the conventional oven standby mode and off mode test measurements P_{IA} and P_{OM}, if applicable. For conventional cooktops, record the conventional cooking top standby mode and off mode test measurements P_{IA} and P_{OM}, if applicable. For conventional ranges, record the conventional range standby mode and off mode test measurements P_{IA} and P_{OM}, if applicable.

3.3.8 For the surface unit under test, record the electric energy consumption, E_{CT}, or the gas volume consumption, V_{CT}, the final test block temperature, T_{CT}, and the total test time, t_{CT}. For a gas cooking top which uses electrical energy for ignition of the burners, also record E_{IC}.

3.3.9 Record the heating value, Hn, as determined in section 2.2.2.2 of this appendix for the natural gas supply.

3.3.10 Record the heating value, Hp, as determined in section 2.2.2.3 of this appendix for the propane supply.

3.3.11 Record the average standby mode power, P_{SB}, for the microwave oven standby mode, as determined in section 3.2.4 of this appendix for a microwave oven capable of operating in standby mode. Record the average off mode power, P_{OM}, for the microwave oven off mode power test, as determined in section 3.2.4 of this appendix for a microwave oven capable of operating in off mode.

4. Calculation of Derived Results From Test Measurements

4.1 *Conventional oven.*

4.1.1 *Test energy consumption.* For a conventional oven with a thermostat which operates by cycling on and off, calculate the test energy consumption, E_O, expressed in watt-hours (kJ) for electric ovens and in Btus (kJ) for gas ovens, and defined as:

$$E_O = E_{AB} + \left[\left(\frac{T_O - T_{AB}}{T_{CD} - T_{AB}} \right) \times \left(E_{CD} - E_{AB} \right) \right]$$

for electric ovens, and,

$$E_O = (V_{AB} \times H) + \left[\left(\frac{T_O - T_{AB}}{T_{CD} - T_{AB}} \right) \times (V_{CD} - V_{AB}) \times H \right]$$

for gas ovens,

Where:

H = either H_n or H_p, the heating value of the gas used in the test as specified in section 2.2.2.2 and section 2.2.2.3 of this appendix, expressed in Btus per standard cubic foot (kJ/L).

T_O = 234 °F (130 °C) plus the initial test block temperature.

and,

$$E_{AB} = \frac{(E_A + E_B)}{2}, \quad E_{CD} = \frac{(E_C + E_D)}{2},$$

$$V_{AB} = \frac{(V_A + V_B)}{2}, \quad V_{CD} = \frac{(V_C + V_D)}{2},$$

$$T_{AB} = \frac{(T_A + T_B)}{2}, \quad T_{CD} = \frac{(T_C + T_D)}{2},$$

Where:

T_A = block temperature in °F (°C) at the end of the last ''ON'' period of the conventional oven before the test block reaches T_O.

T_B = block temperature in °F (°C) at the beginning of the ''ON'' period following the measurement of T_A.

T_C = block temperature in °F (°C) at the end of the ''ON'' period which starts with T_B.

T_D = block temperature in °F (°C) at the beginning of the ''ON'' period which follows the measurement of T_C.

E_A = electric energy consumed in Wh (kJ) at the end of the last ''ON'' period before the test block reaches T_O.

E_B = electric energy consumed in Wh (kJ) at the beginning of the ''ON'' period following the measurement of T_A.

E_C = electric energy consumed in Wh (kJ) at the end of the ''ON'' period which starts with T_B.

E_D = electric energy consumed in Wh (kJ) at the beginning of the ''ON'' period which follows the measurement of T_C.

V_A = volume of gas consumed in standard cubic feet (L) at the end of the last ''ON'' period before the test block reaches T_O.

V_B = volume of gas consumed in standard cubic feet (L) at the beginning of the ''ON'' period following the measurement of T_A.

V_C = volume of gas consumed in standard cubic feet (L) at the end of the ''ON'' period which starts with T_B.

V_D = volume of gas consumed in standard cubic feet (L) at the beginning of the ''ON'' period which follows the measurement of T_C.

4.1.1.1 *Average test energy consumption.* If the conventional oven can be operated with or without forced convection, determine the average test energy consumption, E_O and E_{IO}, in watt-hours (kJ) for electric ovens and Btus (kJ) for gas ovens using the following equations:

$$E_O = \frac{(E_O)_1 + (E_O)_2}{2}$$

$$E_{IO} = \frac{(E_{IO})_1 + (E_{IO})_2}{2}$$

Where:

$(E_O)_1$ = test energy consumption using the forced convection mode in watt-hours (kJ) for electric ovens and in Btus (kJ) for gas ovens as measured in section 3.2.1.1 of this appendix.

$(E_O)_2$ = test energy consumption without using the forced convection mode in watt-hours (kJ) for electric ovens and in Btus (kJ) for gas ovens as measured in section 3.2.1.1 of this appendix.

$(E_{IO})_1$ = electrical energy consumption in watt-hours (kJ) of a gas oven in forced convection mode as measured in section 3.2.1.1 of this appendix.

$(E_{IO})_2$ = electrical energy consumption in watt-hours (kJ) of a gas oven without using the forced convection mode as measured in section 3.2.1.1 of this appendix.

4.1.2 *Conventional oven annual energy consumption.*

4.1.2.1. *Annual cooking energy consumption.*

4.1.2.1.1. *Annual primary energy consumption.* Calculate the annual primary energy consumption for cooking, E_{CO}, expressed in kilowatt-hours (kJ) per year for electric ovens and in Btu's (kJ) per year for gas ovens, and defined as:

$$E_{CO} = \frac{E_O \times K_e \times O_O}{W_1 \times C_p \times T_S} \text{ for electric ovens,}$$

Where:

E_O = test energy consumption as measured in Section 3.2.1 or as calculated in Section 4.1.1 or Section 4.1.1.1.

K_e = 3.412 Btu/Wh (3.6 kJ/Wh,) conversion factor of watt-hours to Btu's.

O_O = 29.3 kWh (105,480 kJ) per year, annual useful cooking energy output of conventional electric oven.

W_1 = measured weight of test block in pounds (kg).

C_p = 0.23 Btu/lb-°F (0.96 kJ/kg ÷ °C), specific heat of test block.

T_S = 234 °F (130 °C), temperature rise of test block.

$$E_{CO} = \frac{E_O \times O_O}{W_1 \times C_p \times T_S} \text{ for gas ovens,}$$

Where:

E_O = test energy consumption as measured in Section 3.2.1. or as calculated in Section 4.1.1 or Section 4.1.1.1.

O_O = 88.8 kBtu (93,684 kJ) per year, annual useful cooking energy output of conventional gas oven.

W_1, C_p and T_S are the same as defined above.

4.1.2.1.2 *Annual secondary energy consumption for cooking of gas ovens.* Calculate the annual secondary energy consumption for cooking, E_{SO}, expressed in kilowatt-hours (kJ) per year and defined as:

$$E_{SO} = \frac{E_{IO} \times K_e \times O_O}{W_1 \times C_p \times T_S},$$

Where:

E_{IO} = electrical test energy consumption as measured in Section 3.2.1 or as calculated in Section 4.1.1.1.

O_O = 29.3 kWh (105,480 kJ) per year, annual useful cooking energy output.

K_e, W_1, C_p, and T_S are as defined in Section 4.1.2.1.1.

4.1.2.2 *Annual conventional oven self-cleaning energy.*

4.1.2.2.1 *Annual primary energy consumption.* Calculate the annual primary energy consumption for conventional oven self-cleaning operations, E_{SC}, expressed in kilowatt-hours (kJ) per year for electric ovens and in Btus (kJ) for gas ovens, and defined as: $E_{SC} = E_S \times S_e \times K$, for electric ovens,

Where:

E_S = energy consumption in watt-hours, as measured in section 3.2.1.3 of this appendix.

S_e = 4, average number of times a self-cleaning operation of a conventional electric oven is used per year.

K = 0.001 kWh/Wh conversion factor for watt-hours to kilowatt-hours.

or

$E_{SC} = V_S \times H \times S_g$, for gas ovens,

Where:

V_S = gas consumption in standard cubic feet (L), as measured in section 3.2.1.3 of this appendix.

H = H_n or H_p, the heating value of the gas used in the test as specified in sections 2.2.2.2 and 2.2.2.3 of this appendix in Btus per standard cubic foot (kJ/L).

S_g = 4, average number of times a self-cleaning operation of a conventional gas oven is used per year.

4.1.2.2.2 *Annual secondary energy consumption for self-cleaning operation of gas ovens.* Calculate the annual secondary energy consumption for self-cleaning operations of a gas oven, E_{SS}, expressed in kilowatt-hours (kJ) per year and defined as:

$E_{SS} = E_{IS} \times S_g \times K$,

Where:

E_{IS} = electrical energy consumed during the self-cleaning operation of a conventional gas oven, as measured in section 3.2.1.3 of this appendix.

S_g = 4, average number of times a self-cleaning operation of a conventional gas oven is used per year.

K = 0.001 kWh/Wh conversion factor for watt-hours to kilowatt-hours.

4.1.2.3 *Annual combined low-power mode energy consumption of a single conventional oven.* Calculate the annual standby mode and off mode energy consumption for conventional ovens, E_{OTLP}, expressed in kilowatt-hours (kJ) per year and defined as:

$E_{OTLP} = [(P_{IA} \times S_{IA}) + (P_{OM} \times S_{OM})] \times K$,

Where:

P_{IA} = conventional oven inactive mode power, in watts, as measured in section 3.2.1.4 of this appendix.

P_{OM} = conventional oven off mode power, in watts, as measured in section 3.2.1.4 of this appendix.

S_{TOT} equals the total number of inactive mode and off mode hours per year;

If the conventional oven has fan-only mode, S_{TOT} equals (8,540.1 − (t_{OF}/60)) hours, where t_{OF} is the conventional oven fan-only mode duration, in minutes, as measured in section 3.2.1.2 of this appendix, and 60 is the conversion factor for minutes to hours; otherwise, S_{TOT} is equal to 8,540.1 hours.

If the conventional oven has both inactive mode and off mode, S_{IA} and S_{OM} both equal S_{TOT}/2;

If the conventional oven has an inactive mode but no off mode, the inactive mode annual hours, S_{IA}, is equal to S_{TOT} and the off mode annual hours, S_{OM}, is equal to 0;

If the conventional oven has an off mode but no inactive mode, S_{IA} is equal to 0 and S_{OM} is equal to S_{TOT};

K = 0.001 kWh/Wh conversion factor for watt-hours to kilowatt-hours.

4.1.2.4 *Total annual energy consumption of a single conventional oven.*

4.1.2.4.1 *Conventional electric oven energy consumption.* Calculate the total annual energy consumption of a conventional electric oven, E_{AO}, expressed in kilowatt-hours (kJ) per year and defined as:

$E_{AO} = E_{CO} + E_{SC}$,

Where:

E_{CO} = annual primary cooking energy consumption as determined in section 4.1.2.1.1 of this appendix.

E_{SC} = annual primary self-cleaning energy consumption as determined in section 4.1.2.2.1 of this appendix.

4.1.2.4.2 *Conventional electric oven integrated energy consumption.* Calculate the total integrated annual electrical energy consumption of a conventional electric oven, IE_{AO}, expressed in kilowatt-hours (kJ) per year and defined as:

$IE_{AO} = E_{CO} + E_{SC} + E_{OTLP}, + (E_{OF} \times N_{OE})$,

Where:

E_{CO} = annual primary cooking energy consumption as determined in section 4.1.2.1.1 of this appendix.

E_{SC} = annual primary self-cleaning energy consumption as determined in section 4.1.2.2.1 of this appendix.

E_{OTLP} = annual combined low-power mode energy consumption as determined in section 4.1.2.3 of this appendix.

E_{OF} = fan-only mode energy consumption as measured in section 3.2.1.2 of this appendix.

N_{OE} = representative number of annual conventional electric oven cooking cycles per year, which is equal to 219 cycles for a conventional electric oven without self-clean capability and 204 cycles for a conventional electric oven with self-clean capability.

4.1.2.4.3 *Conventional gas oven energy consumption.* Calculate the total annual gas energy consumption of a conventional gas oven, E_{AOG}, expressed in Btus (kJ) per year and defined as:

$E_{AOG} = E_{CO} + E_{SC}$,

Where:

E_{CO} = annual primary cooking energy consumption as determined in section 4.1.2.1.1 of this appendix.

E_{SC} = annual primary self-cleaning energy consumption as determined in section 4.1.2.2.1 of this appendix.

If the conventional gas oven uses electrical energy, calculate the total annual electrical energy consumption, E_{AOE}, expressed in kilowatt-hours (kJ) per year and defined as:

$E_{AOE} = E_{SO} + E_{SS}$,

Where:

E_{SO} = annual secondary cooking energy consumption as determined in section 4.1.2.1.2 of this appendix.

E_{SS} = annual secondary self-cleaning energy consumption as determined in section 4.1.2.2.2 of this appendix.

If the conventional gas oven uses electrical energy, also calculate the total integrated annual electrical energy consumption, IE_{AOE}, expressed in kilowatt-hours (kJ) per year and defined as:

$IE_{AOE} = E_{SO} + E_{SS} + E_{OTLP} + (E_{OF} \times N_{OG})$,

Where:

E_{SO} = annual secondary cooking energy consumption as determined in section 4.1.2.1.2 of this appendix.

E_{SS} = annual secondary self-cleaning energy consumption as determined in section 4.1.2.2.2 of this appendix.

E_{OTLP} = annual combined low-power mode energy consumption as determined in section 4.1.2.3 of this appendix.

E_{OF} = fan-only mode energy consumption as measured in section 3.2.1.2 of this appendix.

N_{OG} = representative number of annual conventional gas oven cooking cycles per year, which is equal to 183 cycles for a conventional gas oven without self-clean capability and 197 cycles for a conventional gas oven with self-clean capability.

4.1.2.5. *Total annual energy consumption of multiple conventional ovens.* If the cooking appliance includes more than one conventional oven, calculate the total annual energy consumption of the conventional ovens using the following equations:

4.1.2.5.1 *Conventional electric oven energy consumption.* Calculate the total annual energy consumption, $E_{TO,}$ in kilowatt-hours (kJ) per year and defined as:

$E_{TO} = E_{ACO} + E_{ASC}$,

Where:

$$E_{ACO} = \frac{1}{n}\sum_{i=1}^{n}\left(E_{CO}\right)_i ,$$

is the average annual primary energy consumption for cooking, and where:

n = number of conventional ovens in the basic model.

E_{CO} = annual primary energy consumption for cooking as determined in section 4.1.2.1.1 of this appendix.

$$E_{ASC} = \frac{1}{n}\sum_{i=1}^{n}\left(E_{SC}\right)_i ,$$

average annual self-cleaning energy consumption,

Where:

n = number of self-cleaning conventional ovens in the basic model.

E_{SC} = annual primary self-cleaning energy consumption as determined according to section 4.1.2.2.1 of this appendix.

4.1.2.5.2 *Conventional electric oven integrated energy consumption.* Calculate the total integrated annual energy consumption, $IE_{TO,}$ in kilowatt-hours (kJ) per year and defined as:

$IE_{TO} = E_{ACO} + E_{ASC} + E_{OTLP} + (E_{OF} \times N_{OE})$,

Where:

$$E_{ACO} = \frac{1}{n}\sum_{i=1}^{n}\left(E_{CO}\right)_i ,$$

is the average annual primary energy consumption for cooking, and where:

n = number of conventional ovens in the basic model.

E_{CO} = annual primary energy consumption for cooking as determined in section 4.1.2.1.1 of this appendix.

$$E_{ASC} = \frac{1}{n}\sum_{i=1}^{n}\left(E_{SC}\right)_i ,$$

average annual self-cleaning energy consumption,

Where:

n = number of self-cleaning conventional ovens in the basic model.

E_{SC} = annual primary self-cleaning energy consumption as determined according to section 4.1.2.2.1 of this appendix.

E_{OTLP} = annual combined low-power mode energy consumption for the cooking appliance as determined in section 4.1.2.3 of this appendix.

E_{OF} = fan-only mode energy consumption as measured in section 3.2.1.2 of this appendix.

N_{OE} = representative number of annual conventional electric oven cooking cycles per year, which is equal to 219 cycles for a conventional electric oven without self-clean capability and 204 cycles for a conventional electric oven with self-clean capability.

4.1.2.5.3 *Conventional gas oven energy consumption*. Calculate the total annual gas energy consumption, E_{TOG}, in Btus (kJ) per year and defined as:

$E_{TOG} = E_{ACO} + E_{ASC}$,

Where:

E_{ACO} = average annual primary energy consumption for cooking in Btus (kJ) per year and is calculated as:

$$E_{ACO} = \frac{1}{n}\sum_{i=1}^{n}\left(E_{CO}\right)_i ,$$

Where:

n = number of conventional ovens in the basic model.

E_{CO} = annual primary energy consumption for cooking as determined in section 4.1.2.1.1 of this appendix.

and,

E_{ASC} = average annual self-cleaning energy consumption in Btus (kJ) per year and is calculated as:

$$E_{ASC} = \frac{1}{n}\sum_{i=1}^{n}\left(E_{SC}\right)_i ,$$

Where:

n = number of self-cleaning conventional ovens in the basic model.

E_{SC} = annual primary self-cleaning energy consumption as determined according to section 4.1.2.2.1 of this appendix.

If the oven also uses electrical energy, calculate the total annual electrical energy consumption, E_{TOE}, in kilowatt-hours (kJ) per year and defined as:

$E_{TOE} = E_{ASO} + E_{AAS}$,

Where:

$$E_{ASO} = \frac{1}{n}\sum_{i=1}^{n}\left(E_{SO}\right)_i ,$$

is the average annual secondary energy consumption for cooking,

Where:

n = number of conventional ovens in the basic model.

E_{SO} = annual secondary energy consumption for cooking of gas ovens as determined in section 4.1.2.1.2 of this appendix.

$$E_{AAS} = \frac{1}{n}\sum_{i=1}^{n}\left(E_{SS}\right)_i ,$$

is the average annual secondary self-cleaning energy consumption,

Where:

n = number of self-cleaning ovens in the basic model.

E_{SS} = annual secondary self-cleaning energy consumption of gas ovens as determined in section 4.1.2.2.2 of this appendix.

If the oven also uses electrical energy, also calculate the total integrated annual electrical energy consumption, IE_{TOE}, in kilowatt-hours (kJ) per year and defined as:

$IE_{TOE} = E_{ASO} + E_{AAS} + E_{OTLP} + (E_{OF} \times N_{OG})$,

Where:

$$E_{ASO} = \frac{1}{n}\sum_{i=1}^{n}\left(E_{SO}\right)_i ,$$

is the average annual secondary energy consumption for cooking,

Where:

n = number of conventional ovens in the basic model.

E_{SO} = annual secondary energy consumption for cooking of gas ovens as determined in section 4.1.2.1.2 of this appendix.

$$E_{AAS} = \frac{1}{n}\sum_{i=1}^{n}\left(E_{SS}\right)_i ,$$

is the average annual secondary self-cleaning energy consumption,

Where:

n = number of self-cleaning ovens in the basic model.

E_{SS} = annual secondary self-cleaning energy consumption of gas ovens as determined in section 4.1.2.2.2 of this appendix.

E_{OTLP} = annual combined low-power mode energy consumption as determined in section 4.1.2.3 of this appendix.

E_{OF} = fan-only mode energy consumption as measured in section 3.2.1.2 of this appendix.

N_{OG} = representative number of annual conventional gas oven cooking cycles per year, which is equal to 183 cycles for a conventional gas oven without self-clean

capability and 197 cycles for a conventional gas oven with self-clean capability.

4.1.3 *Conventional oven cooking efficiency*.

4.1.3.1 *Single conventional oven*. Calculate the conventional oven cooking efficiency, Eff_{AO}, using the following equations:

For electric ovens:

$$Eff_{AO} = \frac{W_l \times C_p \times T_S}{E_O \times K_e},$$

and,

For gas ovens:

$$Eff_{AO} = \frac{W_l \times C_p \times T_S}{E_O + (E_{IO} \times K_e)},$$

Where:

W_l = measured weight of test block in pounds (kg).

C_p = 0.23 Btu/lb-°F (0.96 kJ/kg÷ °C), specific heat of test block.

T_S = 234 °F (130 °C), temperature rise of test block.

E_O = test energy consumption as measured in Section 3.2.1 or calculated in Section 4.1.1 or Section 4.1.1.1.

K_e = 3.412 Btu/Wh (3.6 kJ/Wh), conversion factor for watt-hours to Btu's.

E_{IO} = electrical test energy consumption according to Section 3.2.1 or as calculated in Section 4.1.1.1.

4.1.3.2 *Multiple conventional ovens*. If the cooking appliance includes more than one conventional oven, calculate the cooking efficiency for all of the conventional ovens in the appliance, Eff_{TO}, using the following equation:

$$Eff_{TO} = \frac{n}{\sum_{i=1}^{n} \left(\frac{1}{Eff_{AO}} \right)_i},$$

Where:

n = number of conventional ovens in the cooking appliance.

Eff_{AO} = cooking efficiency of each oven determined according to Section 4.1.3.1.

4.1.4 *Conventional oven energy factor and integrated energy factor*.

4.1.4.1 *Conventional oven energy factor*. Calculate the energy factor, or the ratio of useful cooking energy output to the total energy input, R_O, using the following equations:

$$R_O = \frac{O_O}{E_{AO}},$$

For electric ovens,

Where:

O_O = 29.3 kWh (105,480 kJ) per year, annual useful cooking energy output.

E_{AO} = total annual energy consumption for electric ovens as determined in section 4.1.2.4.1 of this appendix.

For gas ovens:

$$R_O = \frac{O_O}{E_{AOG} + (E_{AOE} \times K_e)},$$

Where:

O_O = 88.8 kBtu (93,684 kJ) per year, annual useful cooking energy output.

E_{AOG} = total annual gas energy consumption for conventional gas ovens as determined in section 4.1.2.4.3 of this appendix.

E_{AOE} = total annual electrical energy consumption for conventional gas ovens as determined in section 4.1.2.4.3 of this appendix.

K_e = 3,412 Btu/kWh (3,600 kJ/kWh), conversion factor for kilowatt-hours to Btu's.

4.1.4.2 *Conventional oven integrated energy factor*. Calculate the integrated energy factor, or the ratio of useful cooking energy output to the total integrated energy input, IR_O, using the following equations:

$$IR_O = \frac{O_O}{IE_{AO}},$$

For electric ovens,

Where:

O_O = 29.3 kWh (105,480 kJ) per year, annual useful cooking energy output.

IE_{AO} = total integrated annual energy consumption for electric ovens as determined in section 4.1.2.4.2 of this appendix.

For gas ovens:

$$IR_O = \frac{O_O}{E_{AOG} + \left(IE_{AOE} \times K_e\right)},$$

Where:

O_O = 88.8 kBtu (93,684 kJ) per year, annual useful cooking energy output.

E_{AOG} = total annual gas energy consumption for conventional gas ovens as determined in section 4.1.2.4.3 of this appendix.

IE_{AOE} = total integrated annual electrical energy consumption for conventional gas ovens as determined in section 4.1.2.4.3 of this appendix.

K_e = 3,412 Btu/kWh (3,600 kJ/kWh), conversion factor for kilowatt-hours to Btus.

4.2.1.1 *Electric surface unit cooking efficiency*. Calculate the cooking efficiency, $Eff_{SU,}$ of the electric surface unit under test, defined as:

$$Eff_{SU} = W \times C_P \times \left(\frac{T_{SU}}{K_e \times E_{CT}}\right),$$

Where:

W = measured weight of test block, W_2 or W_3, expressed in pounds (kg).

C_p = 0.23 Btu/lb- °F (0.96 kJ/kg ÷ °C), specific heat of test block.

T_{SU} = temperature rise of the test block: final test block temperature, T_{CT}, as determined in section 3.2.2 of this appendix, minus the initial test block temperature, T_I, expressed in °F (°C) as determined in section 2.7.5 of this appendix.

K_e = 3.412 Btu/Wh (3.6 kJ/Wh), conversion factor of watt-hours to Btus.

E_{CT} = measured energy consumption, as determined according to section 3.2.2.1 of this appendix, expressed in watt-hours (kJ).

4.2.1.2 *Gas surface unit cooking efficiency*. Calculate the cooking efficiency, $Eff_{SU,}$ of the gas surface unit under test, defined as:

$$Eff_{SU} = \left(\frac{W_3 \times C_P \times T_{SU}}{E}\right),$$

Where:

W_3 = measured weight of test block as measured in section 3.3.2 of this appendix, expressed in pounds (kg).

C_p and T_{SU} are the same as defined in section 4.2.1.1 of this appendix.

and,

$E = V_{CT} + (E_{IC} \times K_e)$,

Where:

V_{CT} = total gas consumption in standard cubic feet (L) for the gas surface unit test as measured in section 3.2.2.1 of this appendix.

E_{IC} = electrical energy consumed in watt-hours (kJ) by an ignition device of a gas surface unit as measured in section 3.2.2.1 of this appendix.

K_e = 3.412 Btu/Wh (3.6 kJ/Wh), conversion factor of watt-hours to Btus.

4.2.1.3 *Conventional cooking top cooking efficiency*. Calculate the conventional cooking top cooking efficiency, Eff_{CT}, using the following equation:

$$Eff_{CT} = \frac{1}{n}\sum_{i=1}^{n}\left(Eff_{SU}\right)_i,$$

Where:

n = number of surface units in the cooking top.

Eff_{SU} = the efficiency of each of the surface units, as determined according to Section 4.2.1.1 or Section 4.2.1.2.

4.2.2 *Conventional cooking top annual energy consumption*.

4.2.2.1 *Conventional electric cooking top*.

4.2.2.1.1 *Annual energy consumption of a conventional electric cooking top*. Calculate the annual electrical energy consumption of an electric cooking top, E_{CA}, in kilowatt-hours (kJ) per year, defined as:

$$E_{CA} = \frac{O_{CT}}{Eff_{CT}},$$

Where:

O_{CT} = 173.1 kWh (623,160 kJ) per year, annual useful cooking energy output.

Eff_{CT} = conventional cooking top cooking efficiency as defined in section 4.2.1.3 of this appendix.

4.2.2.1.2 *Integrated annual energy consumption of a conventional electric cooking top*. Calculate the total integrated annual electrical energy consumption of an electric cooking top, IE_{CA}, in kilowatt-hours (kJ) per year, defined as:

$$IE_{CA} = \frac{O_{CT}}{Eff_{CT}} + E_{CTLP},$$

Where:

O_{CT} = 173.1 kWh (623,160 kJ) per year, annual useful cooking energy output.

Eff_{CT} = conventional cooking top cooking efficiency as defined in section 4.2.1.3 of this appendix.

E_{CTLP} = conventional cooking top combined low-power mode energy consumption = $[(P_{IA} \times S_{IA}) + (P_{OM} \times S_{OM})] \times K$,

Where:

P_{IA} = conventional cooking top inactive mode power, in watts, as measured in section 3.1.2.1.1 of this appendix.

P_{OM} = conventional cooking top off mode power, in watts, as measured in section 3.1.2.1.2 of this appendix.

If the conventional cooking top has both inactive mode and off mode annual hours, S_{IA} and S_{OM} both equal 4273.4;

If the conventional cooking top has an inactive mode but no off mode, the inactive mode annual hours, S_{IA}, is equal to 8546.9, and the off mode annual hours, S_{OM}, is equal to 0;

If the conventional cooking top has an off mode but no inactive mode, S_{IA} is equal to 0, and S_{OM} is equal to 8546.9;

K = 0.001 kWh/Wh conversion factor for watt-hours to kilowatt-hours.

4.2.2.2 *Conventional gas cooking top*

4.2.2.2.1 *Annual cooking energy consumption*. Calculate the annual energy consumption for

cooking, E_{CC}, in Btu's (kJ) per year for a gas cooking top, defined as:

$$E_{CC} = \frac{O_{CT}}{Eff_{CT}},$$

Where:

O_{CT} = 527.6 kBtu (556,618 kJ) per year, annual useful cooking energy output.

Eff_{CT} = the gas cooking top efficiency as defined in Section 4.2.1.3.

4.2.2.2.2 *Total integrated annual energy consumption of a conventional gas cooking top.* Calculate the total integrated annual energy consumption of a conventional gas cooking top, IE_{CA}, in Btus (kJ) per year, defined as:

$IE_{CA} = E_{CC} + E_{CTSO}$,

Where:

E_{CC} = energy consumption for cooking as determined in section 4.2.2.2.1 of this appendix.

E_{CTSO} = conventional cooking top combined low-power mode energy consumption = $[(P_{IA} \times S_{IA}) + (P_{OM} \times S_{OM})] \times K$,

Where:

P_{IA} = conventional cooking top inactive mode power, in watts, as measured in section 3.1.2.1.1 of this appendix.

P_{OM} = conventional cooking top off mode power, in watts, as measured in section 3.1.2.1.2 of this appendix.

If the conventional cooking top has both inactive mode and off mode annual hours, S_{IA} and S_{OM} both equal 4273.4;

If the conventional cooking top has an inactive mode but no off mode, the inactive mode annual hours, S_{IA}, is equal to 8546.9, and the off mode annual hours, S_{OM}, is equal to 0;

If the conventional cooking top has an off mode but no inactive mode, S_{IA} is equal to 0, and S_{OM} is equal to 8546.9;

K = 0.001 kWh/Wh conversion factor for watt-hours to kilowatt-hours.

4.2.3 *Conventional cooking top energy factor and integrated energy factor.*

4.2.3.1 *Conventional cooking top energy factor.* Calculate the energy factor or ratio of useful cooking energy output for cooking to the total energy input, R_{CT}, as follows:

For an electric cooking top, the energy factor is the same as the cooking efficiency as determined according to section 4.2.1.3 of this appendix.

For gas cooking tops,

$$R_{CT} = \frac{O_{CT}}{E_{CC}},$$

Where:

O_{CT} = 527.6 kBtu (556,618 kJ) per year, annual useful cooking energy output of cooking top.

E_{CC} = energy consumption for cooking as determined in section 4.2.2.2.1 of this appendix.

4.2.3.2 *Conventional cooking top integrated energy factor.* Calculate the integrated energy factor or ratio of useful cooking energy output for cooking to the total integrated energy input, IR_{CT}, as follows:

For electric cooking tops,

$$IR_{CT} = \frac{O_{CT}}{IE_{CA}},$$

Where:

O_{CT} = 527.6 kBtu (556,618 kJ) per year, annual useful cooking energy output of cooking top.

IE_{CA} = total annual integrated energy consumption of cooking top determined according to section 4.2.2.1.2 of this appendix.

For gas cooking tops,

$$IR_{CT} = \frac{O_{CT}}{IE_{CA}},$$

Where:

O_{CT} = 527.6 kBtu (556,618 kJ) per year, annual useful cooking energy output of cooking top.

IE_{CA} = total integrated annual energy consumption of cooking top determined according to section 4.2.2.2.2 of this appendix.

4.3 *Combined components*. The annual energy consumption of a kitchen range (*e.g.*, a cooking top and oven combined) shall be the sum of the annual energy consumption of each of its components. The integrated annual energy consumption of a kitchen range shall be the sum of the annual energy consumption of each of its components plus the total annual fan-only mode energy consumption for the oven component, E_{TOF}, defined as:

$E_{TOF} = E_{OF} \times N_R$,

Where:

E_{OF} = conventional oven fan-only mode energy consumption, in kilowatt-hours, as measured in section 3.2.1.2 of this appendix.

N_R = representative number of annual conventional oven cooking cycles per year, which is equal to 219 cycles for a conventional electric oven without self-clean capability, 204 cycles for a conventional electric oven with self-clean capability, 183 cycles for a conventional gas oven without self-clean capability, and 197 cycles for a conventional gas oven with self-clean capability.

plus the conventional range integrated annual combined low-power mode energy consumption, E_{RTLP}, defined as:

$E_{RTLP} = [(P_{IA} \times S_{IA}) + (P_{OM} \times S_{OM})] \times K$

Where:

P_{IA} = conventional range inactive mode power, in watts, as measured in section 3.1.3.1 of this appendix.

P_{OM} = conventional range off mode power, in watts, as measured in section 3.1.3.2 of this appendix.

S_{TOT} equals the total number of inactive mode and off mode hours per year;

If the conventional oven component of the conventional range has fan-only mode, S_{TOT} equals $(8{,}329.2 - (t_{OF}/60))$ hours, where t_{OF} is the conventional oven fan-only mode duration, in minutes, as measured in section 3.2.1.2 of this appendix, and 60 is the conversion factor for minutes to hours; otherwise, S_{TOT} is equal to 8,329.2 hours.

If the conventional range has both inactive mode and off mode, S_{IA} and S_{OM} both equal $S_{TOT}/2$;

If the conventional range has an inactive mode but no off mode, the inactive mode annual hours, S_{IA}, is equal to S_{TOT}, and the off mode annual hours, S_{OM}, is equal to 0;

If the conventional range has an off mode but no inactive mode, S_{IA} is equal to 0, and S_{OM} is equal to S_{TOT};

K = 0.001 kWh/Wh conversion factor for watt-hours to kilowatt-hours.

The annual energy consumption for other combinations of ovens and cooktops will also be treated as the sum of the annual energy consumption of each of its components. The energy factor of a combined component is the sum of the annual useful cooking energy output of each component divided by the sum of the total annual energy consumption of each component. The integrated energy factor of other combinations of ovens and cooktops is the sum of the annual useful cooking energy output of each component divided by the sum of the total integrated annual energy consumption of each component.

[62 FR 51981, Oct. 3, 1997, as amended at 75 FR 42583, July 22, 2010; 76 FR 12844, Mar. 9, 2011; 77 FR 65987, Oct. 31, 2012; 78 FR 4025, Jan. 18, 2013]

APPENDIX J1 TO SUBPART B OF PART 430—UNIFORM TEST METHOD FOR MEASURING THE ENERGY CONSUMPTION OF AUTOMATIC AND SEMI-AUTOMATIC CLOTHES WASHERS

Manufacturers may use Appendix J1 to certify compliance with existing DOE energy conservation standards until the compliance date of any amended standards that address standby and off mode power consumption for residential clothes washers. After this date, all residential clothes washers shall be tested using the provisions of Appendix J2.

1. Definitions and Symbols

1.1 *Adaptive control system* means a clothes washer control system, other than an adaptive water fill control system, which is capable of automatically adjusting washer operation or washing conditions based on characteristics of the clothes load placed in the clothes container, without allowing or requiring consumer intervention or actions.

The automatic adjustments may, for example, include automatic selection, modification, or control of any of the following: wash water temperature, agitation or tumble cycle time, number of rinse cycles, and spin speed. The characteristics of the clothes load, which could trigger such adjustments, could, for example, consist of or be indicated by the presence of either soil, soap, suds, or any other additive laundering substitute or complementary product.

NOTE: Appendix J1 does not provide a means for determining the energy consumption of a clothes washer with an adaptive control system. Therefore, pursuant to 10 CFR 430.27, a waiver must be obtained to establish an acceptable test procedure for each such clothes washer.

1.2 *Adaptive water fill control system* means a clothes washer water fill control system which is capable of automatically adjusting the water fill level based on the size or weight of the clothes load placed in the clothes container, without allowing or requiring consumer intervention or actions.

1.3 *Bone-dry* means a condition of a load of test cloth which has been dried in a dryer at maximum temperature for a minimum of 10 minutes, removed and weighed before cool down, and then dried again for 10 minute periods until the final weight change of the load is 1 percent or less.

1.4 *Clothes container* means the compartment within the clothes washer that holds the clothes during the operation of the machine.

1.5 *Compact* means a clothes washer which has a clothes container capacity of less than 1.6 ft^3 (45 L).

1.6 *Deep rinse cycle* means a rinse cycle in which the clothes container is filled with water to a selected level and the clothes load is rinsed by agitating it or tumbling it through the water.

1.7 *Energy test cycle* for a basic model means (A) the cycle recommended by the manufacturer for washing cotton or linen clothes, and includes all wash/rinse temperature selections and water levels offered in that cycle, and (B) for each other wash/rinse temperature selection or water level available on that basic model, the portion(s) of other cycle(s) with that temperature selection or water level that, when tested pursuant to these test procedures, will contribute to an accurate representation of the energy consumption of the basic model as used by consumers. Any cycle under (A) or (B) shall include the agitation/tumble operation, spin speed(s), wash times, and rinse times applicable to that cycle, including water heating time for water heating clothes washers.

1.8 *Load use factor* means the percentage of the total number of wash loads that a user would wash a particular size (weight) load.

1.9 *Manual control system* means a clothes washer control system which requires that the consumer make the choices that determine washer operation or washing conditions, such as, for example, wash/rinse temperature selections, and wash time before starting the cycle.

1.10 *Manual water fill control system* means a clothes washer water fill control system which requires the consumer to determine or select the water fill level.

1.11 *Modified energy factor* means the quotient of the cubic foot (or liter) capacity of the clothes container divided by the total clothes washer energy consumption per cycle, with such energy consumption expressed as the sum of the machine electrical energy consumption, the hot water energy consumption, and the energy required for removal of the remaining moisture in the wash load.

1.12 *Non-water-heating clothes washer* means a clothes washer which does not have an internal water heating device to generate hot water.

1.13 *Spray rinse cycle* means a rinse cycle in which water is sprayed onto the clothes for a period of time without maintaining any specific water level in the clothes container.

1.14 *Standard* means a clothes washer which has a clothes container capacity of 1.6 ft^3 (45 L) or greater.

1.15 *Temperature use factor* means, for a particular wash/rinse temperature setting, the percentage of the total number of wash loads that an average user would wash with that setting.

1.16 *Thermostatically controlled water valves* means clothes washer controls that have the ability to sense and adjust the hot and cold supply water.

1.17 *Uniformly distributed warm wash temperature selection(s)* means (A) multiple warm wash selections for which the warm wash water temperatures have a linear relationship with all discrete warm wash selections when the water temperatures are plotted against equally spaced consecutive warm wash selections between the hottest warm wash and the coldest warm wash. If the warm wash has infinite selections, the warm wash water temperature has a linear relationship with the distance on the selection device (e.g. dial angle or slide movement) between the hottest warm wash and the coldest warm wash. The criteria for a linear relationship as specified above is that the difference between the actual water temperature at any warm wash selection and the point where that temperature is depicted on the temperature/selection line formed by connecting the warmest and the coldest warm selections is less than ±5 percent. In all cases, the mean water temperature of the warmest and the coldest warm selections must coincide with the mean of the ''hot wash'' (maximum wash temperature ≤135 °F (57.2 °C)) and ''cold wash'' (minimum wash temperature) water temperatures within ±3.8

°F (±2.1 °C); or (B) on a clothes washer with only one warm wash temperature selection, a warm wash temperature selection with a water temperature that coincides with the mean of the ''hot wash'' (maximum wash temperature ≤135 °F (57.2 °C)) and ''cold wash'' (minimum wash temperature) water temperatures within ±3.8 °F (±2.1 °C).

1.18 *Warm wash* means all wash temperature selections that are below the hottest hot, less than 135 °F (57.2 °C), and above the coldest cold temperature selection.

1.19 *Water factor* means the quotient of the total weighted per-cycle water consumption divided by the cubic foot (or liter) capacity of the clothes washer.

1.20 *Water-heating clothes washer* means a clothes washer where some or all of the hot water for clothes washing is generated by a water heating device internal to the clothes washer.

1.21 *Symbol usage*. The following identity relationships are provided to help clarify the symbology used throughout this procedure.

E—Electrical Energy Consumption
H—Hot Water Consumption
C—Cold Water Consumption
R—Hot Water Consumed by Warm Rinse
ER—Electrical Energy Consumed by Warm Rinse
TUF—Temperature Use Factor
HE—Hot Water Energy Consumption
F—Load Usage Factor
Q—Total Water Consumption
ME—Machine Electrical Energy Consumption
RMC—Remaining Moisture Content
WI—Initial Weight of Dry Test Load
WC—Weight of Test Load After Extraction
m—Extra Hot Wash (maximum wash temp. >135 °F (57.2 °C.))
h—Hot Wash (maximum wash temp. ≤135 °F (57.2 °C.))
w—Warm Wash
c—Cold Wash (minimum wash temp.)
r—Warm Rinse (hottest rinse temp.)
x or max—Maximum Test Load
a or avg—Average Test Load
n or min—Minimum Test Load

The following examples are provided to show how the above symbols can be used to define variables:

Em_x = ''Electrical Energy Consumption'' for an ''Extra Hot Wash'' and ''Maximum Test Load''
R_a = ''Hot Water Consumed by Warm Rinse'' for the ''Average Test Load''
TUF_m = ''Temperature Use Factor'' for an ''Extra Hot Wash''
HE_{min} = ''Hot Water Energy Consumption'' for the ''Minimum Test Load''

1.22 *Cold rinse* means the coldest rinse temperature available on the machine.

1.23 *Warm rinse* means the hottest rinse temperature available on the machine (and should be the same rinse temperature selection tested in 3.7 of this appendix).

2. Testing Conditions

2.1 *Installation*. Install the clothes washer in accordance with manufacturer's instructions.

2.2 *Electrical energy supply*. Maintain the electrical supply at the clothes washer terminal block within 2 percent of 120, 120/240, or 120/208Y volts as applicable to the particular terminal block wiring system and within 2 percent of the nameplate frequency as specified by the manufacturer. If the clothes washer has a dual voltage conversion capability, conduct test at the highest voltage specified by the manufacturer.

2.3 *Supply Water*.

2.3.1 *Clothes washers in which electrical energy consumption or water energy consumption are affected by the inlet water temperature. (For example, water heating clothes washers or clothes washers with thermostatically controlled water valves.)*. The temperature of the hot water supply at the water inlets shall not exceed 135 °F (57.2 °C) and the cold water supply at the water inlets shall not exceed 60 °F (15.6 °C). A water meter shall be installed in both the hot and cold water lines to measure water consumption.

2.3.2 *Clothes washers in which electrical energy consumption and water energy consumption are not affected by the inlet water temperature*. The temperature of the hot water supply shall be maintained at 135 °F±5 °F (57.2 °C±2.8 °C) and the cold water supply shall be maintained at 60 °F±5 °F (15.6 °C±2.8 °C). A water meter shall be installed in both the hot and cold water lines to measure water consumption.

2.4 *Water pressure*. The static water pressure at the hot and cold water inlet connection of the clothes washer shall be maintained at 35 pounds per square inch gauge (psig) ±2.5 psig (241.3 kPa±17.2 kPa) during the test. The static water pressure for a single water inlet connection shall be maintained at 35 psig±2.5 psig (241.3 kPa±17.2 kPa) during the test. A water pressure gauge shall be installed in both the hot and cold water lines to measure water pressure.

2.5 *Instrumentation*. Perform all test measurements using the following instruments, as appropriate:

2.5.1 *Weighing scales*.

2.5.1.1 *Weighing scale for test cloth*. The scale shall have a resolution of no larger than 0.2 oz (5.7 g) and a maximum error no greater than 0.3 percent of the measured value.

2.5.1.2 *Weighing scale for clothes container capacity measurements*. The scale should have a resolution no larger than 0.50 lbs (0.23 kg) and a maximum error no greater than 0.5 percent of the measured value.

2.5.2 *Watt-hour meter*. The watt-hour meter shall have a resolution no larger than 1 Wh (3.6 kJ) and a maximum error no greater

than 2 percent of the measured value for any demand greater than 50 Wh (180.0 kJ).

2.5.3 *Temperature measuring device*. The device shall have an error no greater than ±1 °F (±0.6 °C) over the range being measured.

2.5.4 *Water meter*. The water meter shall have a resolution no larger than 0.1 gallons (0.4 liters) and a maximum error no greater than 2 percent for the water flow rates being measured.

2.5.5 *Water pressure gauge*. The water pressure gauge shall have a resolution of 1 pound per square inch gauge (psig) (6.9 kPa) and shall have an error no greater than 5 percent of any measured value.

2.6 *Test cloths*.

2.6.1 *Energy Test Cloth*. The energy test cloth shall be made from energy test cloth material, as specified in 2.6.4, that is 24 inches by 36 inches (61.0 cm by 91.4 cm) and has been hemmed to 22 inches by 34 inches (55.9 cm by 86.4 cm) before washing. The energy test cloth shall be clean and shall not be used for more than 60 test runs (after preconditioning as specified in 2.6.3 of this appendix). All energy test cloth must be permanently marked identifying the lot number of the material. Mixed lots of material shall not be used for testing the clothes washers.

2.6.2 *Energy Stuffer Cloth*. The energy stuffer cloth shall be made from energy test cloth material, as specified in 2.6.4, and shall consist of pieces of material that are 12 inches by 12 inches (30.5 cm by 30.5 cm) and have been hemmed to 10 inches by 10 inches (25.4 cm by 25.4 cm) before washing. The energy stuffer cloth shall be clean and shall not be used for more than 60 test runs (after preconditioning as specified in 2.6.3 of this appendix). All energy stuffer cloth must be permanently marked identifying the lot number of the material. Mixed lots of material shall not be used for testing the clothes washers.

2.6.3 *Preconditioning of Test Cloths*. The new test cloths, including energy test cloths and energy stuffer cloths, shall be pre-conditioned in a clothes washer in the following manner:

2.6.3.1 Perform 5 complete normal wash-rinse-spin cycles, the first two with current AHAM Standard detergent Formula 3 and the last three without detergent. Place the test cloth in a clothes washer set at the maximum water level. Wash the load for ten minutes in soft water (17 ppm hardness or less) using 27.0 grams + 4.0 grams per pound of cloth load of AHAM Standard detergent Formula 3. The wash temperature is to be controlled to 135 °F ±5 °F (57.2 °C ±2.8 °C) and the rinse temperature is to be controlled to 60 °F ±5 °F (15.6 °C ±2.8 °C). Repeat the cycle with detergent and then repeat the cycle three additional times without detergent, bone drying the load between cycles (total of five wash and rinse cycles).

2.6.4 *Energy test cloth material*. The energy test cloths and energy stuffer cloths shall be made from fabric meeting the following specifications. The material should come from a roll of material with a width of approximately 63 inches and approximately 500 yards per roll, however, other sizes maybe used if they fall within the specifications.

2.6.4.1 *Nominal fabric type*. Pure finished bleached cloth, made with a momie or granite weave, which is nominally 50 percent cotton and 50 percent polyester.

2.6.4.2 The fabric weight shall be 5.60 ounces per square yard (190.0 g/m^2), ±5 percent.

2.6.4.3 The thread count shall be 65 × 57 per inch (warp × fill), ±2 percent.

2.6.4.4 The warp yarn and filling yarn shall each have fiber content of 50 percent ±4 percent cotton, with the balance being polyester, and be open end spun, 15/1 ±5 percent cotton count blended yarn.

2.6.4.5 Water repellent finishes, such as fluoropolymer stain resistant finishes shall not be applied to the test cloth. The absence of such finishes shall be verified by:

2.6.4.5.1 American Association of Textile Chemists and Colorists (AATCC) Test Method 118—1997, *Oil Repellency: Hydrocarbon Resistance Test* (reaffirmed 1997), of each new lot of test cloth (when purchased from the mill) to confirm the absence of Scotchguard™ or other water repellent finish (required scores of ''D'' across the board).

2.6.4.5.2 American Association of Textile Chemists and Colorists (AATCC) Test Method 79–2000, *Absorbency of Bleached Textiles* (reaffirmed 2000), of each new lot of test cloth (when purchased from the mill) to confirm the absence of Scotchguard™ or other water repellent finish (time to absorb one drop should be on the order of 1 second).

2.6.4.5.3 The standards listed in 2.6.4.5.1 and 2.6.4.5.2 of this appendix which are not otherwise set forth in this part 430 are incorporated by reference. The material listed in this paragraph has been approved for incorporation by reference by the Director of the Federal Register in accordance with 5 U.S.C. 552(a) and 1 CFR part 51. Any subsequent amendment to a standard by the standard-setting organization will not affect the DOE test procedures unless and until amended by DOE. Material is incorporated as it exists on the date of the approval and notice of any change in the material will be published in the FEDERAL REGISTER. The standards incorporated by reference are the American Association of Textile Chemists and Colorists Test Method 118–1997, *Oil Repellency: Hydrocarbon Resistance Test* (reaffirmed 1997) and Test Method 79–2000, *Absorbency of Bleached Textiles* (reaffirmed 2000).

(a) The above standards incorporated by reference are available for inspection at:

(i) National Archives and Records Administration (NARA). For information on the availability of this material at NARA, call 202–741–6030, or go to: *http://www.archives.gov/*

federal__register/code__of__federal__regulations/ibr__locations.html.

(ii) U.S. Department of Energy, Office of Energy Efficiency and Renewable Energy, Hearings and Dockets, ''Energy Conservation Program for Consumer Products: Clothes Washer Energy Conservation Standards,'' Docket No. EE—RM–94–403, Forrestal Building, 1000 Independence Avenue, SW, Washington, DC.

(b) Copies of the above standards incorporated by reference can be obtained from the American Association of Textile Chemists and Colorists, P.O. Box 12215, Research Triangle Park, NC 27709, telephone (919) 549–3526, fax (919) 549–8933, or email: *orders@aatcc.org*.

2.6.4.6 The moisture absorption and retention shall be evaluated for each new lot of test cloth by the Standard Extractor Remaining Moisture Content (RMC) Test specified in 2.6.5 of this appendix.

2.6.4.6.1 Repeat the Standard Extractor RMC Test in 2.6.5 of this appendix three times.

2.6.4.6.2 An RMC correction curve shall be calculated as specified in 2.6.6 of this appendix.

2.6.5 *Standard Extractor RMC Test Procedure*. The following procedure is used to evaluate the moisture absorption and retention characteristics of a lot of test cloth by measuring the RMC in a standard extractor at a specified set of conditions. Table 2.6.5 of this appendix is the matrix of test conditions. The 500g requirement will only be used if a clothes washer design can achieve spin speeds in the 500g range. When this matrix is repeated 3 times, a total of 48 extractor RMC test runs are required. For the purpose of the extractor RMC test, the test cloths may be used for up to 60 test runs (after preconditioning as specified in 2.6.3 of this appendix).

TABLE 2.6.5—MATRIX OF EXTRACTOR RMC TEST CONDITIONS

''g Force''	Warm soak		Cold soak	
	15 min. spin	4 min. spin	15 min. spin	4 min. spin
100	.....	.....	.....	.....
200	.....	.....	.....	.....
350	.....	.....	.....	.....
500	.....	.....	.....	.....

2.6.5.1 The standard extractor RMC tests shall be run in a Bock Model 215 extractor (having a basket diameter of 19.5 inches, length of 12 inches, and volume of 2.1 ft^3), with a variable speed drive (Bock Engineered Products, P.O. Box 5127, Toledo, OH 43611) or an equivalent extractor with same basket design (*i.e.* diameter, length, volume, and hole configuration) and variable speed drive.

2.6.5.2 *Test Load*. Test cloths shall be preconditioned in accordance with 2.6.3 of this appendix. The load size shall be 8.4 lbs., consistent with 3.8.1 of this appendix.

2.6.5.3 *Procedure*.

2.6.5.3.1 Record the ''bone-dry'' weight of the test load (WI).

2.6.5.3.2 Soak the test load for 20 minutes in 10 gallons of soft (<17 ppm) water. The entire test load shall be submerged. The water temperature shall be 100 °F ±5 °F.

2.6.5.3.3 Remove the test load and allow water to gravity drain off of the test cloths. Then manually place the test cloths in the basket of the extractor, distributing them evenly by eye. Spin the load at a fixed speed corresponding to the intended centripetal acceleration level (measured in units of the acceleration of gravity, g) ±1 g for the intended time period ±5 seconds.

2.6.5.3.4 Record the weight of the test load immediately after the completion of the extractor spin cycle (WC).

2.6.5.3.5 Calculate the RMC as (WC-WI)/WI.

2.6.5.3.6 The RMC of the test load shall be measured at three (3) g levels: 100g; 200g; and 350g, using two different spin times at each g level: 4 minutes; and 15 minutes. If a clothes washer design can achieve spin speeds in the 500g range then the RMC of the test load shall be measured at four (4) g levels: 100g; 200g; 350g; and 500g, using two different spin times at each g level: 4 minutes; and 15 minutes.

2.6.5.4 Repeat 2.6.5.3 of this appendix using soft (<17 ppm) water at 60 °F ±5 °F.

2.6.6 *Calculation of RMC correction curve*.

2.6.6.1 Average the values of 3 test runs and fill in Table 2.6.5 of this appendix. Perform a linear least-squares fit to determine coefficients A and B such that the standard RMC values shown in Table 2.6.6.1 of this appendix ($RMC_{standard}$) are linearly related to the RMC values measured in section 2.6.5 of this appendix (RMC_{cloth}):

$$RMC_{standard} \sim A * RMC_{cloth} + B$$

where A and B are coefficients of the linear least-squares fit.

2.6.6.2 Perform an analysis of variance with replication test using two factors, spin speed and lot, to check the interaction of speed and lot. Use the values from Table 2.6.5 and Table 2.6.6.1 of this Appendix in the calculation. The ''P'' value of the F-statistic for interaction between spin speed and lot in the variance analysis shall be greater than or equal to 0.1. If the ''P'' value is less than 0.1, the test cloth is unacceptable. ''P'' is a theoretically based measure of interaction based on an analysis of variance.

2.6.7 *Application of RMC correction curve*.

2.6.7.1 Using the coefficients A and B calculated in 2.6.6.1 of this appendix:

$$RMC_{corr} = A * RMC + B$$

2.6.7.2 Substitute RMC_{corr} values in calculations in 3.8 of this appendix.

2.7 *Test Load Sizes*. Maximum, minimum, and, when required, average test load sizes

shall be determined using Table 5.1 and the clothes container capacity as measured in 3.1.1 through 3.1.5. Test loads shall consist of energy test cloths, except that adjustments to the test loads to achieve proper weight can be made by the use of energy stuffer cloths with no more than 5 stuffer clothes per load.

2.8 *Use of Test Loads*. Table 2.8 defines the test load sizes and corresponding water fill settings which are to be used when measuring water and energy consumptions. Adaptive water fill control system and manual water fill control system are defined in section 1 of this appendix:

TABLE 2.8—TEST LOAD SIZES AND WATER FILL SETTINGS REQUIRED

Manual water fill control system		Adaptive water fill control system	
Test load size	Water fill setting	Test load size	Water fill setting
Max Min	Max Min	Max Avg Min	As determined by the Clothes Washer.

2.8.1 The test load sizes to be used to measure RMC are specified in section 3.8.1.

2.8.2 Test loads for energy and water consumption measurements shall be bone dry prior to the first cycle of the test, and dried to a maximum of 104 percent of bone dry weight for subsequent testing.

2.8.3 Load the energy test cloths by grasping them in the center, shaking them to hang loosely and then put them into the clothes container prior to activating the clothes washer.

2.9 *Pre-conditioning*.

2.9.1 *Nonwater-heating clothes washer*. If the clothes washer has not been filled with water in the preceding 96 hours, pre-condition it by running it through a cold rinse cycle and then draining it to ensure that the hose, pump, and sump are filled with water.

2.9.2 *Water-heating clothes washer*. If the clothes washer has not been filled with water in the preceding 96 hours, or if it has not been in the test room at the specified ambient conditions for 8 hours, pre-condition it by running it through a cold rinse cycle and then draining it to ensure that the hose, pump, and sump are filled with water.

2.10 *Wash time setting*. If one wash time is prescribed in the energy test cycle, that shall be the wash time setting; otherwise, the wash time setting shall be the higher of either the minimum or 70 percent of the maximum wash time available in the energy test cycle, regardless of the labeling of suggested dial locations. If the clothes washer is equipped with an electromechanical dial controlling wash time, reset the dial to the minimum wash time and then turn it in the direction of increasing wash time to reach the appropriate setting. If the appropriate setting is passed, return the dial to the minimum wash time and then turn in the direction of increasing wash time until the setting is reached.

2.11 *Test room temperature for water-heating clothes washers*. Maintain the test room ambient air temperature at 75 °F±5 °F (23.9 °C±2.8 °C).

3. Test Measurements

3.1 *Clothes container capacity*. Measure the entire volume which a dry clothes load could occupy within the clothes container during washer operation according to the following procedures:

3.1.1 Place the clothes washer in such a position that the uppermost edge of the clothes container opening is leveled horizontally, so that the container will hold the maximum amount of water.

3.1.2 Line the inside of the clothes container with 2 mil (0.051 mm) plastic sheet. All clothes washer components which occupy space within the clothes container and which are recommended for use with the energy test cycle shall be in place and shall be lined with 2 mil (0.051 mm) plastic sheet to prevent water from entering any void space.

3.1.3 Record the total weight of the machine before adding water.

3.1.4 Fill the clothes container manually with either 60 °F±5 °F (15.6 °C±2.8 °C) or 100 °F±10 °F (37.8 °C±5.5 °C) water to its uppermost edge. Measure and record the weight of water, W, in pounds.

3.1.5 The clothes container capacity is calculated as follows:

$$C=W/d.$$

where:

C=Capacity in cubic feet (liters).
W=Mass of water in pounds (kilograms).
d=Density of water (62.0 lbs/ft^3 for 100 °F (993 kg/m^3 for 37.8 °C) or 62.3 lbs/ft^3 for 60 °F (998 kg/m^3 for 15.6 °C)).

3.2 *Procedure for measuring water and energy consumption values on all automatic and semi-automatic washers*. All energy consumption tests shall be performed under the energy test cycle(s), unless otherwise specified. Table 3.2 defines the sections below which govern tests of particular clothes washers, based on the number of wash/rinse temperature selections available on the model, and also, in some instances, method of water heating. The procedures prescribed are applicable regardless of a clothes washer's washing capacity, loading port location, primary axis of rotation of the clothes container, and type of control system.

3.2.1 *Inlet water temperature and the wash/rinse temperature settings*.

3.2.1.1 For automatic clothes washers set the wash/rinse temperature selection control

to obtain the wash water temperature desired (extra hot, hot, warm, or cold) and cold rinse, and open both the hot and cold water faucets.

3.2.1.2 For semi-automatic washers: (1) For hot water temperature, open the hot water faucet completely and close the cold water faucet; (2) for warm inlet water temperature, open both hot and cold water faucets completely; (3) for cold water temperature, close the hot water faucet and open the cold water faucet completely.

3.2.1.3 *Determination of warm wash water temperature(s) to decide whether a clothes washer has uniformly distributed warm wash temperature selections.* The wash water temperature, Tw, of each warm water wash selection shall be calculated or measured.

For non-water-heating clothes washers, calculate Tw as follows:

$$Tw(°F)=((Hw\times 135\ °F)+(Cw\times 60\ °F))/(Hw+Cw)$$

or

$$Tw(°C)=((Hw\times 57.2\ °C)+(Cw\times 15.6\ °C))/(Hw+Cw)$$

where:

Hw=Hot water consumption of a warm wash
Cw=Cold water consumption of a warm wash

For water-heating clothes washers, measure and record the temperature of each warm wash selection after fill.

3.2.2 Total water consumption during the energy test cycle shall be measured, including hot and cold water consumption during wash, deep rinse, and spray rinse.

3.2.3 *Clothes washers with adaptive water fill/manual water fill control systems*

3.2.3.1 *Clothes washers with adaptive water fill control system and alternate manual water fill control systems.* If a clothes washer with an adaptive water fill control system allows consumer selection of manual controls as an alternative, then both manual and adaptive modes shall be tested and, for each mode, the energy consumption (HE_T, ME_T, and D_E) and water consumption (Q_T), values shall be calculated as set forth in section 4. Then the average of the two values (one from each mode, adaptive and manual) for each variable shall be used in section 4 for the clothes washer.

3.2.3.2 *Clothes washers with adaptive water fill control system.*

3.2.3.2.1. Not user adjustable. The maximum, minimum, and average water levels as defined in the following sections shall be interpreted to mean that amount of water fill which is selected by the control system when the respective test loads are used, as defined in Table 2.8. The load usage factors which shall be used when calculating energy consumption values are defined in Table 4.1.3.

3.2.3.2.2 User adjustable. Four tests shall be conducted on clothes washers with user adjustable adaptive water fill controls which affect the relative wash water levels. The first test shall be conducted with the maximum test load and with the adaptive water fill control system set in the setting that will give the most energy intensive result. The second test shall be conducted with the minimum test load and with the adaptive water fill control system set in the setting that will give the least energy intensive result. The third test shall be conducted with the average test load and with the adaptive water fill control system set in the setting that will give the most energy intensive result for the given test load. The fourth test shall be conducted with the average test load and with the adaptive water fill control system set in the setting that will give the least energy intensive result for the given test load. The energy and water consumption for the average test load and water level, shall be the average of the third and fourth tests.

3.2.3.3 *Clothes washers with manual water fill control system.* In accordance with Table 2.8, the water fill selector shall be set to the maximum water level available on the clothes washer for the maximum test load size and set to the minimum water level for the minimum test load size. The load usage factors which shall be used when calculating energy consumption values are defined in Table 4.1.3.

TABLE 3.2—TEST SECTION REFERENCE

Max. Wash Temp. Available	≤135 °F (57.2 °C)		>135 °F (57.2 °C)[2]		
Number of Wash Temp. Selections	1	2	>2	3	>3
Test Sections Required to be Followed	.....	.....	.....	3.3	3.3
	.....	3.4	3.4	.....	3.4
	.....	.....	3.5	3.5	3.5
	3.6	3.6	3.6	3.6	3.6
	[1]3.7	[1]3.7	[1]3.7	[1]3.7	[1]3.7
	3.8	3.8	3.8	3.8	3.8

[1] Only applicable to machines with warm rinse in any cycle.
[2] This only applies to water hearting clothes washers on which the maximum wash temperature available exceeds 135 °F (57.2 °C)

3.3 *''Extra Hot Wash'' (Max Wash Temp >135 °F (57.2 °C)) for water heating clothes washers only*. Water and electrical energy consumption shall be measured for each water fill level and/or test load size as specified in 3.3.1 through 3.3.3 for the hottest wash setting available.

3.3.1 *Maximum test load and water fill*. Hot water consumption (Hm_x), cold water consumption (Cm_x), and electrical energy consumption (Em_x) shall be measured for an extra hot wash/cold rinse energy test cycle, with the controls set for the maximum water fill level. The maximum test load size is to be used and shall be determined per Table 5.1.

3.3.2 *Minimum test load and water fill*. Hot water consumption (Hm_n), cold water consumption (Cm_n), and electrical energy consumption (Em_n) shall be measured for an extra hot wash/cold rinse energy test cycle, with the controls set for the minimum water fill level. The minimum test load size is to be used and shall be determined per Table 5.1.

3.3.3 *Average test load and water fill*. For clothes washers with an adaptive water fill control system, measure the values for hot water consumption (Hm_a), cold water consumption (Cm_a), and electrical energy consumption (Em_a) for an extra hot wash/cold rinse energy test cycle, with an average test load size as determined per Table 5.1.

3.4 *''Hot Wash'' (Max Wash Temp≤135 °F (57.2 °C))*. Water and electrical energy consumption shall be measured for each water fill level or test load size as specified in 3.4.1 through 3.4.3 for a 135 °F (57.2 °C)) wash, if available, or for the hottest selection less than 135 °F (57.2 °C)).

3.4.1 *Maximum test load and water fill*. Hot water consumption (Hh_x), cold water consumption (Ch_x), and electrical energy consumption (Eh_x) shall be measured for a hot wash/cold rinse energy test cycle, with the controls set for the maximum water fill level. The maximum test load size is to be used and shall be determined per Table 5.1.

3.4.2 *Minimum test load and water fill*. Hot water consumption (Hh_n), cold water consumption (Ch_n), and electrical energy consumption (Eh_n) shall be measured for a hot wash/cold rinse energy test cycle, with the controls set for the minimum water fill level. The minimum test load size is to be used and shall be determined per Table 5.1.

3.4.3 *Average test load and water fill*. For clothes washers with an adaptive water fill control system, measure the values for hot water consumption (Hh_a), cold water consumption (Ch_a), and electrical energy consumption (Eh_a) for a hot wash/cold rinse energy test cycle, with an average test load size as determined per Table 5.1.

3.5 *''Warm Wash.''* Water and electrical energy consumption shall be determined for each water fill level and/or test load size as specified in 3.5.1 through 3.5.2.3 for the applicable warm water wash temperature(s).

3.5.1 *Clothes washers with uniformly distributed warm wash temperature selection(s)*. The reportable values to be used for the warm water wash setting shall be the arithmetic average of the measurements for the hot and cold wash selections. This is a calculation only, no testing is required.

3.5.2 *Clothes washers that lack uniformly distributed warm wash temperature selections*. For a clothes washer with fewer than four discrete warm wash selections, test all warm wash temperature selections. For a clothes washer that offers four or more warm wash selections, test at all discrete selections, or test at 25 percent, 50 percent, and 75 percent positions of the temperature selection device between the hottest hot (≤135 °F (57.2 °C)) wash and the coldest cold wash. If a selection is not available at the 25, 50 or 75 percent position, in place of each such unavailable selection use the next warmer setting. Each reportable value to be used for the warm water wash setting shall be the arithmetic average of all tests conducted pursuant to this section.

3.5.2.1 *Maximum test load and water fill*. Hot water consumption (Hw_x), cold water consumption (Cw_x), and electrical energy consumption (Ew_x) shall be measured with the controls set for the maximum water fill level. The maximum test load size is to be used and shall be determined per Table 5.1.

3.5.2.2 *Minimum test load and water fill*. Hot water consumption (Hw_n), cold water consumption (Cw_n), and electrical energy consumption (Ew_n) shall be measured with the controls set for the minimum water fill level. The minimum test load size is to be used and shall be determined per Table 5.1.

3.5.2.3 *Average test load and water fill*. For clothes washers with an adaptive water fill control system, measure the values for hot water consumption (Hw_a), cold water consumption (Cw_a), and electrical energy consumption (Ew_a) with an average test load size as determined per Table 5.1.

3.6 *''Cold Wash'' (Minimum Wash Temperature Selection)*. Water and electrical energy consumption shall be measured for each water fill level or test load size as specified in sections 3.6.1 through 3.6.3 of this Appendix for the coldest wash temperature selection available. For a clothes washer that offers two or more wash temperature settings labeled as cold, such as ''Cold'' and ''Tap Cold'', the setting with the minimum wash temperature shall be considered the cold wash. If any of the other cold wash temperature settings add hot water to raise the wash temperature above the cold water supply temperature, as defined in section 2.3 of this Appendix, those setting(s) shall be considered warm wash setting(s), as defined in section 1.18 of this Appendix. If none of the cold wash temperature settings add hot water for

any of the water fill levels or test load sizes required for the energy test cycle, the wash temperature setting labeled as ''Cold'' shall be considered the cold wash, and the other wash temperature setting(s) labeled as cold shall not be required for testing.

3.7 *Warm Rinse.* Tests in sections 3.7.1 and 3.7.2 shall be conducted with the hottest rinse temperature available. If multiple wash temperatures are available with the hottest rinse temperature, any ''warm wash'' temperature may be selected to conduct the tests.

3.7.1 For the rinse only, measure the amount of hot water consumed by the clothes washer including all deep and spray rinses, for the maximum (R_x), minimum (R_n), and, if required by section 3.5.2.3, average (R_a) test load sizes or water fill levels.

3.7.2 Measure the amount of electrical energy consumed by the clothes washer to heat the rinse water only, including all deep and spray rinses, for the maximum (ER_x), minimum (ER_n), and, if required by section 3.5.2.3, average (ER_a), test load sizes or water fill levels.

3.8 *Remaining Moisture Content:*

3.8.1 The wash temperature will be the same as the rinse temperature for all testing. Use the maximum test load as defined in Table 5.1 and section 3.1 for testing.

3.8.2 *For clothes washers with cold rinse only:*

3.8.2.1 Record the actual 'bone dry' weight of the test load (WI_{max}), then place the test load in the clothes washer.

3.8.2.2 Set water level selector to maximum fill.

3.8.2.3 Run the energy test cycle.

3.8.2.4 Record the weight of the test load immediately after completion of the energy test cycle (WC_{max}).

3.8.2.5 Calculate the remaining moisture content of the maximum test load, RMC_{MAX}, expressed as a percentage and defined as:

$$RMC_{max} = ((WC_{max} - WI_{max})/WI_{max}) \times 100\%$$

3.8.3 *For clothes washers with cold and warm rinse options:*

3.8.3.1 Complete steps 3.8.2.1 through 3.8.2.4 for cold rinse. Calculate the remaining moisture content of the maximum test load for cold rinse, RMC_{COLD}, expressed as a percentage and defined as:

$$RMC_{COLD} = ((WC_{max} - WI_{max})/WI_{max}) \times 100\%$$

3.8.3.2 Complete steps 3.8.2.1 through 3.8.2.4 for warm rinse. Calculate the remaining moisture content of the maximum test load for warm rinse, RMC_{WARM}, expressed as a percentage and defined as:

$$RMC_{WARM} = ((WC_{max} - WI_{max})/WI_{max}) \times 100\%$$

3.8.3.3 Calculate the remaining moisture content of the maximum test load, RMC_{max}, expressed as a percentage and defined as:

$$RMC_{max} = RMC_{COLD} \times (1 - TUF_r) + RMC_{WARM} \times (TUF_r).$$

where:

TUF_r is the temperature use factor for warm rinse as defined in Table 4.1.1.

3.8.4 Clothes washers which have options that result in different RMC values, such as multiple selection of spin speeds or spin times, that are available in the energy test cycle, shall be tested at the maximum and minimum extremes of the available options, excluding any ''no spin'' (zero spin speed) settings, in accordance with requirements in 3.8.2 or 3.8.3. The calculated $RMC_{max\ extraction}$ and $RMC_{min\ extraction}$ at the maximum and minimum settings, respectively, shall be combined as follows and the final RMC to be used in section 4.3 shall be:

$$RMC = 0.75 \times RMC_{max\ extraction} + 0.25 \times RMC_{min\ extraction}$$

4. Calculation of Derived Results From Test Measurements

4.1 *Hot water and machine electrical energy consumption of clothes washers.*

4.1.1 *Per-cycle temperature-weighted hot water consumption for maximum, average, and minimum water fill levels using each appropriate load size as defined in section 2.8 and Table 5.1.* Calculate for the cycle under test the per-cycle temperature weighted hot water consumption for the maximum water fill level, Vh_x, the average water fill level, Vh_a, and the minimum water fill level, Vh_n, expressed in gallons per cycle (or liters per cycle) and defined as:

(a) $Vh_x = [Hm_x \times TUF_m] + [Hh_x \times TUF_h] + [Hw_x \times TUF_w] + [Hc_x \times TUF_c] + [R_x \times TUF_r]$

(b) $Vh_a = [Hm_a \times TUF_m] + [Hh_a \times TUF_h] + [Hw_a \times TUF_w] + [Hc_a \times TUF_c] + [R_a \times TUF_r]$

(c) $Vh_n = [Hm_n \times TUF_m] + [Hh_n \times TUF_h] + [Hw_n \times TUF_w] + [Hc_n \times TUF_c] + [R_n \times TUF_r]$

where:

Hm_x, Hm_a, and Hm_n, are reported hot water consumption values, in gallons per-cycle (or liters per cycle), at maximum, average, and minimum water fill, respectively, for the extra-hot wash cycle with the appropriate test loads as defined in section 2.8.

Hh_x, Hh_a, and Hh_n, are reported hot water consumption values, in gallons per-cycle (or liters per cycle), at maximum, average, and minimum water fill, respectively, for the hot wash cycle with the appropriate test loads as defined in section 2.8.

Hw_x, Hw_a, and Hw_n, are reported hot water consumption values, in gallons per-cycle (or liters per cycle), at maximum, average, and minimum water fill, respectively, for the warm wash cycle with the appropriate test loads as defined in section 2.8.

Hc_x, Hc_a, and Hc_n, are reported hot water consumption values, in gallons per-cycle (or liters per cycle), at maximum, average, and minimum water fill, respectively, for the cold wash cycle with the appropriate test loads as defined in section 2.8.

R_x, R_a, and R_n are the reported hot water consumption values, in gallons per-cycle (or liters per cycle), at maximum, average, and minimum water fill, respectively, for the warm rinse cycle and the appropriate test loads as defined in section 2.8.

TUF_m, TUF_h, TUF_w, TUF_c, and TUF_r are temperature use factors for extra hot wash, hot wash, warm wash, cold wash, and warm rinse temperature selections, respectively, and are as defined in Table 4.1.1.

TABLE 4.1.1—TEMPERATURE USE FACTORS

Max Wash Temp Available	≤135 °F (57.2 °C)	≤135 °F (57.2 °C)	≤135 °F (57.2 °C)	>135 °F (57.2 °C)	>135 °F (57.2 °C)
No. Wash Temp Selections	Single	2 Temps	>2 Temps	3 Temps	>3 Temps
TUF_m (extra hot)	NA	NA	NA	0.14	0.05
TUF_h (hot)	NA	0.63	0.14	NA	0.09
TUF_w (warm)	NA	NA	0.49	0.49	0.49
TUF_c (cold)	1.00	0.37	0.37	0.37	0.37
TUF_r (warm rinse)	0.27	0.27	0.27	0.27	0.27

4.1.2 *Total per-cycle hot water energy consumption for all maximum, average, and minimum water fill levels tested.* Calculate the total per-cycle hot water energy consumption for the maximum water fill level, HE_{max}, the minimum water fill level, HE_{min}, and the average water fill level, HE_{avg}, expressed in kilowatt-hours per cycle and defined as:

(a) $HE_{max} = [Vh_x \times T \times K]$=Total energy when a maximum load is tested.

(b) $HE_{avg} = [Vh_a \times T \times K]$=Total energy when an average load is tested.

(c) $HE_{min} = [Vh_n \times T \times K]$=Total energy when a minimum load is tested.

where:

T=Temperature rise=75 °F (41.7 °C).

K=Water specific heat in kilowatt-hours per gallon degree F=0.00240 (0.00114 kWh/L-°C).

Vh_x Vh_a, and Vh_n, are as defined in 4.1.1.

4.1.3 *Total weighted per-cycle hot water energy consumption.* Calculate the total weighted per cycle hot water energy consumption, HE_T, expressed in kilowatt-hours per cycle and defined as:

$$HE_T = [HE_{max} \times F_{max}] + [HE_{avg} \times F_{avg}] + [HE_{mn} \times F_{min}]$$

where:

HE_{max}, HE_{avg}, and HE_{min} are as defined in 4.1.2.

F_{max}, F_{avg}, and F_{min} are the load usage factors for the maximum, average, and minimum test loads based on the size and type of control system on the washer being tested. The values are as shown in table 4.1.3.

TABLE 4.1.3—LOAD USAGE FACTORS

Water fill control system	Manual	Adaptive
F_{max} =	0.72 [1]	0.12 [2]
F_{avg} =	.....	0.74 [2]

TABLE 4.1.3—LOAD USAGE FACTORS—Continued

Water fill control system	Manual	Adaptive
F_{min} =	0.28 [1]	0.14 [2]

[1] Reference 3.2.3.3.
[2] Reference 3.2.3.2.

4.1.4 *Total per-cycle hot water energy consumption using gas-heated or oil-heated water.* Calculate for the energy test cycle the per-cycle hot water consumption, $HE_{TG,}$ using gas-heated or oil-heated water, expressed in Btu per cycle (or megajoules per cycle) and defined as:

$HE_{TG} = HE_T \times 1/e \times 3412$ Btu/kWh or $HE_{TG} = HE_T \times 1/e \times 3.6$ MJ/kWh

Where:

e = Nominal gas or oil water heater efficiency=0.75.

HE_T = As defined in 4.1.3.

4.1.5 *Per-cycle machine electrical energy consumption for all maximum, average, and minimum test load sizes.* Calculate the total per-cycle machine electrical energy consumption for the maximum water fill level, ME_{max}, the minimum water fill level, ME_{min}, and the average water fill level, ME_{avg}, expressed in kilowatt-hours per cycle and defined as:

(a) $ME_{max} = [Em_x \times TUF_m] + [Eh_x \times TUF_h] + [Ew_x \times TUF_w] + [Ec_x \times TUF_c] + [ER_x \times TUF_r]$

(b) $ME_{avg} = [Em_a \times TUF_m] + [Eh_a \times TUF_h] + [Ew_a \times TUF_w] + [Ec_a \times TUF_c] + [ER_a \times TUF_r]$

(c) $ME_{min} = [Em_n \times TUF_m] + [Eh_n \times TUF_h] + [Ew_n \times TUF_w] + [Ec_n \times xTUF_c] + [ER_n \times TUF_r]$

where:

Em_x, Em_a, and Em_n, are reported electrical energy consumption values, in kilowatt-hours per cycle, at maximum, average,

and minimum test loads, respectively, for the extra-hot wash cycle.

Eh_x, Eh_a, and Eh_n, are reported electrical energy consumption values, in kilowatt-hours per cycle, at maximum, average, and minimum test loads, respectively, for the hot wash cycle.

Ew_x, Ew_a, and Ew_n, are reported electrical energy consumption values, in kilowatt-hours per cycle, at maximum, average, and minimum test loads, respectively, for the warm wash cycle.

Ec_x, Ec_a, and Ec_n, are reported electrical energy consumption values, in kilowatt-hours per cycle, at maximum, average, and minimum test loads, respectively, for the cold wash cycle.

ER_x, ER_a, ER_n, are reported electrical energy consumption values, in kilowatt-hours per cycle, at maximum, average, and minimum test loads, respectively, for the warm rinse cycle per definitions in 3.7.2 of this appendix.

TUF_m, TUF_h, TUF_w, TUF_c, and TUF_r are as defined in Table 4.1.1.

4.1.6 *Total weighted per-cycle machine electrical energy consumption*. Calculate the total per cycle load size weighted energy consumption, ME_T, expressed in kilowatt-hours per cycle and defined as:

$$ME_T = [ME_{max} \times F_{max}] + [ME_{avg} \times F_{avg}] + [ME_{min} \times F_{min}]$$

where:

ME_{max}, ME_{avg}, and ME_{min} are as defined in 4.1.5.

F_{max}, F_{avg}, and F_{min} are as defined in Table 4.1.3.

4.1.7 *Total per-cycle energy consumption when electrically heated water is used*. Calculate for the energy test cycle the total per-cycle energy consumption, E_{TE}, using electrical heated water, expressed in kilowatt-hours per cycle and defined as:

$$E_{TE} = HE_T + ME_T$$

where:

ME_T = As defined in 4.1.6.
HE_T = As defined in 4.1.3.

4.2 Water consumption of clothes washers.

4.2.1 *Per-cycle water consumption*. Calculate the maximum, average, and minimum total water consumption, expressed in gallons per cycle (or liters per cycle), for the cold wash/cold rinse cycle and defined as:

$$Q_{max} = [Hc_x + Cc_x]$$
$$Q_{avg} = [Hc_a + Cc_a]$$
$$Q_{min} = [Hc_n + Cc_n]$$

where:

Hc_x, Cc_x, Hc_a, Cc_a, Hc_n, and Cc_n are as defined in 3.6.

4.2.2 *Total weighted per-cycle water consumption*. Calculate the total weighted per cycle consumption, Q_T, expressed in gallons per cycle (or liters per cycle) and defined as:

$$Q_T = [Q_{max} \times F_{max}] + [Q_{avg} \times F_{avg}] + [Q_{min} \times F_{min}]$$

where:

Q_{max}, Q_{avg}, and Q_{min} are as defined in 4.2.1.

F_{max}, F_{avg}, and F_{min} are as defined in table 4.1.3.

4.2.3 *Water factor*. Calculate the water factor, WF, expressed in gallons per cycle per cubic foot (or liters per cycle per liter), as:

$$WF = Q_T/C$$

Where:

Q_T = As defined in section 4.2.2.
C = As defined in section 3.1.5.

4.3 *Per-cycle energy consumption for removal of moisture from test load*. Calculate the per-cycle energy required to remove the moisture of the test load, D_E, expressed in kilowatt-hours per cycle and defined as

$$D_E = (LAF) \times (\text{Maximum test load weight}) \times (RMC—4\%) \times (DEF) \times (DUF)$$

where:

LAF=Load adjustment factor=0.52.

Test load weight=As required in 3.8.1, expressed in lbs/cycle.

RMC=As defined in 3.8.2.5, 3.8.3.3 or 3.8.4.

DEF=nominal energy required for a clothes dryer to remove moisture from clothes=0.5 kWh/lb (1.1 kWh/kg).

DUF=dryer usage factor, percentage of washer loads dried in a clothes dryer=0.84.

4.4 *Modified energy factor*. Calculate the modified energy factor, MEF, expressed in cubic feet per kilowatt-hour per cycle (or liters per kilowatt-hour per cycle) and defined as:

$$MEF = C/(E_{TE} + D_E)$$

where:

C=As defined in 3.1.5.
E_{TE} = As defined in 4.1.7.
D_E = As defined in 4.3.

5. Test Loads

TABLE 5.1—TEST LOAD SIZES

Container volume		Minimum load		Maximum load		Average load	
cu. ft. ≥<	liter ≥<	lb	kg	lb	kg	lb	kg
0–0.80	0–22.7	3.00	1.36	3.00	1.36	3.00	1.36
0.80–0.90	22.7–25.5	3.00	1.36	3.50	1.59	3.25	1.47

TABLE 5.1—TEST LOAD SIZES—Continued

Container volume		Minimum load		Maximum load		Average load	
cu. ft. ≥<	liter ≥<	lb	kg	lb	kg	lb	kg
0.90–1.00	25.5–28.3	3.00	1.36	3.90	1.77	3.45	1.56
1.00–1.10	28.3–31.1	3.00	1.36	4.30	1.95	3.65	1.66
1.10–1.20	31.1–34.0	3.00	1.36	4.70	2.13	3.85	1.75
1.20–1.30	34.0–36.8	3.00	1.36	5.10	2.31	4.05	1.84
1.30–1.40	36.8–39.6	3.00	1.36	5.50	2.49	4.25	1.93
1.40–1.50	39.6–42.5	3.00	1.36	5.90	2.68	4.45	2.02
1.50–1.60	42.5–45.3	3.00	1.36	6.40	2.90	4.70	2.13
1.60–1.70	45.3–48.1	3.00	1.36	6.80	3.08	4.90	2.22
1.70–1.80	48.1–51.0	3.00	1.36	7.20	3.27	5.10	2.31
1.80–1.90	51.0–53.8	3.00	1.36	7.60	3.45	5.30	2.40
1.90–2.00	53.8–56.6	3.00	1.36	8.00	3.63	5.50	2.49
2.00–2.10	56.6–59.5	3.00	1.36	8.40	3.81	5.70	2.59
2.10–2.20	59.5–62.3	3.00	1.36	8.80	3.99	5.90	2.68
2.20–2.30	62.3–65.1	3.00	1.36	9.20	4.17	6.10	2.77
2.30–2.40	65.1–68.0	3.00	1.36	9.60	4.35	6.30	2.86
2.40–2.50	68.0–70.8	3.00	1.36	10.00	4.54	6.50	2.95
2.50–2.60	70.8–73.6	3.00	1.36	10.50	4.76	6.75	3.06
2.60–2.70	73.6–76.5	3.00	1.36	10.90	4.94	6.95	3.15
2.70–2.80	76.5–79.3	3.00	1.36	11.30	5.13	7.15	3.24
2.80–2.90	79.3–82.1	3.00	1.36	11.70	5.31	7.35	3.33
2.90–3.00	82.1–85.0	3.00	1.36	12.10	5.49	7.55	3.42
3.00–3.10	85.0–87.8	3.00	1.36	12.50	5.67	7.75	3.52
3.10–3.20	87.8–90.6	3.00	1.36	12.90	5.85	7.95	3.61
3.20–3.30	90.6–93.4	3.00	1.36	13.30	6.03	8.15	3.70
3.30–3.40	93.4–96.3	3.00	1.36	13.70	6.21	8.35	3.79
3.40–3.50	96.3–99.1	3.00	1.36	14.10	6.40	8.55	3.88
3.50–3.60	99.1–101.9	3.00	1.36	14.60	6.62	8.80	3.99
3.60–3.70	101.9–104.8	3.00	1.36	15.00	6.80	9.00	4.08
3.70–3.80	104.8–107.6	3.00	1.36	15.40	6.99	9.20	4.17
3.80–3.90	107.6–110.4	3.00	1.36	15.80	7.16	9.40	4.26
3.90–4.00	110.4–113.3	3.00	1.36	16.20	7.34	9.60	4.35
4.00–4.10	113.3–116.1	3.00	1.36	16.60	7.53	9.80	4.45
4.10–4.20	116.1–118.9	3.00	1.36	17.00	7.72	10.00	4.54
4.20–4.30	118.9–121.8	3.00	1.36	17.40	7.90	10.20	4.63
4.30–4.40	121.8–124.6	3.00	1.36	17.80	8.09	10.40	4.72
4.40–4.50	124.6–127.4	3.00	1.36	18.20	8.27	10.60	4.82
4.50–4.60	127.4–130.3	3.00	1.36	18.70	8.46	10.85	4.91
4.60–4.70	130.3–133.1	3.00	1.36	19.10	8.65	11.05	5.00
4.70–4.80	133.1–135.9	3.00	1.36	19.50	8.83	11.25	5.10
4.80–4.90	135.9–138.8	3.00	1.36	19.90	9.02	11.45	5.19
4.90–5.00	138.8–141.6	3.00	1.36	20.30	9.20	11.65	5.28
5.00–5.10	141.6–144.4	3.00	1.36	20.70	9.39	11.85	5.38
5.10–5.20	144.4–147.2	3.00	1.36	21.10	9.58	12.05	5.47
5.20–5.30	147.2–150.1	3.00	1.36	21.50	9.76	12.25	5.56
5.30–5.40	150.1–152.9	3.00	1.36	21.90	9.95	12.45	5.65
5.40–5.50	152.9–155.7	3.00	1.36	22.30	10.13	12.65	5.75
5.50–5.60	155.7–158.6	3.00	1.36	22.80	10.32	12.90	5.84
5.60–5.70	158.6–161.4	3.00	1.36	23.20	10.51	13.10	5.93
5.70–5.80	161.4–164.2	3.00	1.36	23.60	10.69	13.30	6.03
5.80–5.90	164.2–167.1	3.00	1.36	24.00	10.88	13.50	6.12
5.90–6.00	167.1–169.9	3.00	1.36	24.40	11.06	13.70	6.21

Notes: (1) All test load weights are bone dry weights.
(2) Allowable tolerance on the test load weights are ±0.10 lbs (0.05 kg).

6. Waivers and Field Testing

6.1 *Waivers and Field Testing for Non-conventional Clothes Washers.* Manufacturers of non-conventional clothes washers, such as clothes washers with adaptive control systems, must submit a petition for waiver pursuant to 10 CFR 430.27 to establish an acceptable test procedure for that clothes washer. For these and other clothes washers that have controls or systems such that the DOE test procedures yield results that are so unrepresentative of the clothes washer's true energy consumption characteristics as to provide materially inaccurate comparative data, field testing may be appropriate for establishing an acceptable test procedure. The following are guidelines for field testing which may be used by manufacturers in support of petitions for waiver. These guidelines are not mandatory and the Department may

determine that they do not apply to a particular model. Depending upon a manufacturer's approach for conducting field testing, additional data may be required. Manufacturers are encouraged to communicate with the Department prior to the commencement of field tests which may be used to support a petition for waiver. Section 6.3 provides an example of field testing for a clothes washer with an adaptive water fill control system. Other features, such as the use of various spin speed selections, could be the subject of field tests.

6.2 *Nonconventional Wash System Energy Consumption Test*. The field test may consist of a minimum of 10 of the nonconventional clothes washers (''test clothes washers'') and 10 clothes washers already being distributed in commerce (''base clothes washers''). The tests should include a minimum of 50 energy test cycles per clothes washer. The test clothes washers and base clothes washers should be identical in construction except for the controls or systems being tested. Equal numbers of both the test clothes washer and the base clothes washer should be tested simultaneously in comparable settings to minimize seasonal or consumer laundering conditions or variations. The clothes washers should be monitored in such a way as to accurately record the average total energy and water consumption per cycle, including water heating energy when electrically heated water is used, and the energy required to remove the remaining moisture of the test load. The field test results should be used to determine the best method to correlate the rating of the test clothes washer to the rating of the base clothes washer.

6.3 *Adaptive water fill control system field test*. Section 3.2.3.1 defines the test method for measuring energy consumption for clothes washers which incorporate control systems having both adaptive and alternate cycle selections. Energy consumption calculated by the method defined in section 3.2.3.1 assumes the adaptive cycle will be used 50 percent of the time. This section can be used to develop field test data in support of a petition for waiver when it is believed that the adaptive cycle will be used more than 50 percent of the time. The field test sample size should be a minimum of 10 test clothes washers. The test clothes washers should be totally representative of the design, construction, and control system that will be placed in commerce. The duration of field testing in the user's house should be a minimum of 50 energy test cycles, for each unit. No special instructions as to cycle selection or product usage should be given to the field test participants, other than inclusion of the product literature pack which would be shipped with all units, and instructions regarding filling out data collection forms, use of data collection equipment, or basic procedural methods. Prior to the test clothes washers being installed in the field test locations, baseline data should be developed for all field test units by conducting laboratory tests as defined by section 1 through section 5 of these test procedures to determine the energy consumption, water consumption, and remaining moisture content values. The following data should be measured and recorded for each wash load during the test period: wash cycle selected, the mode of the clothes washer (adaptive or manual), clothes load dry weight (measured after the clothes washer and clothes dryer cycles are completed) in pounds, and type of articles in the clothes load (e.g., cottons, linens, permanent press). The wash loads used in calculating the in-home percentage split between adaptive and manual cycle usage should be only those wash loads which conform to the definition of the energy test cycle.

Calculate:

T=The total number of energy test cycles run during the field test
T_a = The total number of adaptive control energy test cycles
T_m = The total number of manual control energy test cycles

The percentage weighting factors:

$P_a = (T_a/T)\times 100$ (the percentage weighting for adaptive control selection)
$P_m = (T_m/T)\times 100$ (the percentage weighting for manual control selection)

Energy consumption (HE_T, ME_T, and D_E) and water consumption (Q_T), values calculated in section 4 for the manual and adaptive modes, should be combined using P_a and P_m as the weighting factors.

[62 FR 45508, Aug. 27, 1997; 63 FR 16669, Apr. 6, 1998, as amended at 66 FR 3330, Jan. 12, 2001; 68 FR 62204, Oct. 31, 2003; 69 FR 18803, Apr. 9, 2004; 77 FR 13937, Mar. 7, 2012; 77 FR 20292, Apr. 4, 2012]

APPENDIX J2 TO SUBPART B OF PART 430—UNIFORM TEST METHOD FOR MEASURING THE ENERGY CONSUMPTION OF AUTOMATIC AND SEMI-AUTOMATIC CLOTHES WASHERS

Manufacturers may use Appendix J1 to certify compliance with existing DOE energy conservation standards until the compliance date of any amended standards that address standby and off mode power consumption for residential clothes washers. After this date, all residential clothes washers shall be tested using the provisions of Appendix J2.

1. DEFINITIONS AND SYMBOLS

1.1 *Active mode* means a mode in which the clothes washer is connected to a mains

power source, has been activated, and is performing one or more of the main functions of washing, soaking, tumbling, agitating, rinsing, and/or removing water from the clothing, or is involved in functions necessary for these main functions, such as admitting water into the washer or pumping water out of the washer. Active mode also includes delay start and cycle finished modes.

1.2 *Active washing mode* means a mode in which the clothes washer is performing any of the operations included in a complete cycle intended for washing a clothing load, including the main functions of washing, soaking, tumbling, agitating, rinsing, and/or removing water from the clothing.

1.3 *Adaptive control system* means a clothes washer control system, other than an adaptive water fill control system, which is capable of automatically adjusting washer operation or washing conditions based on characteristics of the clothes load placed in the clothes container, without allowing or requiring consumer intervention or actions. The automatic adjustments may, for example, include automatic selection, modification, or control of any of the following: Wash water temperature, agitation or tumble cycle time, number of rinse cycles, and spin speed. The characteristics of the clothes load, which could trigger such adjustments, could, for example, consist of or be indicated by the presence of either soil, soap, suds, or any other additive laundering substitute or complementary product.

NOTE: Appendix J2 does not provide a means for determining the energy consumption of a clothes washer with an adaptive control system. A waiver must be obtained pursuant to 10 CFR 430.27 to establish an acceptable test procedure for each such clothes washer.

1.4 *Adaptive water fill control system* means a clothes washer water fill control system which is capable of automatically adjusting the water fill level based on the size or weight of the clothes load placed in the clothes container, without allowing or requiring consumer intervention or actions.

1.5 *Bone-dry* means a condition of a load of test cloth which has been dried in a dryer at maximum temperature for a minimum of 10 minutes, removed and weighed before cool down, and then dried again for 10 minute periods until the final weight change of the load is 1 percent or less.

1.6 *Clothes container* means the compartment within the clothes washer that holds the clothes during the operation of the machine.

1.7 *Cold rinse* means the coldest rinse temperature available on the machine.

1.8 *Combined low-power mode* means the aggregate of available modes other than active washing mode, including inactive mode, off mode, delay start mode, and cycle finished mode.

1.9 *Compact* means a clothes washer which has a clothes container capacity of less than 1.6 ft^3 (45 L).

1.10 *Cycle finished mode* means an active mode which provides continuous status display, intermittent tumbling, or air circulation following operation in active washing mode.

1.11 *Deep rinse cycle* means a rinse cycle in which the clothes container is filled with water to a selected level and the clothes load is rinsed by agitating it or tumbling it through the water.

1.12 *Delay start mode* means an active mode in which activation of active washing mode is facilitated by a timer.

1.13 *Energy test cycle* for a basic model means:

(A) The cycle selection recommended by the manufacturer for washing cotton or linen clothes, and includes all wash/rinse temperature selections for each of the temperature use factors (TUFs) offered in that cycle, and

(B) If the cycle selection described in Part (A) does not include all wash/rinse temperature selections for each of the TUFs available on the clothes washer, the energy test cycle shall include, in addition to Part (A), the alternate cycle selection(s) offering these remaining wash/rinse temperature selection(s), tested only at the wash/rinse temperature selection(s) for each TUF not available on the cycle selection described in Part (A).

Where multiple alternate cycle selections offer a wash/rinse temperature selection for which a TUF has been developed, and that is not available on the cycle selection recommended by the manufacturer for washing cotton or linen clothes described in Part (A), the alternate cycle selection certified by the manufacturer to have the highest energy consumption for that TUF, as measured according to section 2.13, shall be included in the energy test cycle, so that each TUF that is available on the clothes washer has been tested once.

(C) All cycle selections included under Part (A) and all cycle selections included under Part (B) shall be tested using each appropriate load size as defined in section 2.8 and Table 5.1 of this appendix.

(D) For any cycle selection tested under (A) or (B), the manufacturer default settings shall be used, except for the temperature selection, if necessary. This includes wash conditions such as agitation/tumble operation, soil level, spin speed(s), wash times, rinse times, and all other wash parameters or optional features applicable to that cycle, including water heating time for water heating clothes washers.

(E) Each wash cycle included as part of the energy test cycle shall include the entire active washing mode and exclude any delay start or cycle finished modes.

(F) The energy test cycle shall not include any cycle, if available, that is dedicated for cleaning, deodorizing, or sanitizing the clothes washer, and is separate from clothes washing cycles.

1.14 *IEC 62301* means the test standard published by the International Electrotechnical Commission, entitled ''Household electrical appliances–Measurement of standby power,'' Publication 62301, Edition 2.0 2011–01 (incorporated by reference; see § 430.3).

1.15 *Inactive mode* means a standby mode that facilitates the activation of active mode by remote switch (including remote control), internal sensor, or timer, or that provides continuous status display.

1.16 *Integrated modified energy factor* means the quotient of the cubic foot (or liter) capacity of the clothes container divided by the total clothes washer energy consumption per cycle, with such energy consumption expressed as the sum of:

(a) The machine electrical energy consumption;

(b) The hot water energy consumption;

(c) The energy required for removal of the remaining moisture in the wash load; and

(d) The combined low-power mode energy consumption.

1.17 *Integrated water factor* means the quotient of the total weighted per-cycle water consumption for all wash cycles in gallons divided by the cubic foot (or liter) capacity of the clothes washer.

1.18 *Load usage factor* means the percentage of the total number of wash loads that a user would wash a particular size (weight) load.

1.19 *Lot* means a quantity of cloth that has been manufactured with the same batches of cotton and polyester during one continuous process.

1.20 *Manual control system* means a clothes washer control system which requires that the consumer make the choices that determine washer operation or washing conditions, such as, for example, wash/rinse temperature selections and wash time, before starting the cycle.

1.21 *Manual water fill control system* means a clothes washer water fill control system which requires the consumer to determine or select the water fill level.

1.22 *Modified energy factor* means the quotient of the cubic foot (or liter) capacity of the clothes container divided by the total clothes washer energy consumption per cycle, with such energy consumption expressed as the sum of the machine electrical energy consumption, the hot water energy consumption, and the energy required for removal of the remaining moisture in the wash load.

1.23 *Non-water-heating clothes washer* means a clothes washer which does not have an internal water heating device to generate hot water.

1.24 *Off mode* means a mode in which the clothes washer is connected to a mains power source and is not providing any active or standby mode function, and where the mode may persist for an indefinite time. An indicator that only shows the user that the product is in the off position is included within the classification of an off mode.

1.25 *Roll* means a subset of a lot.

1.26 *Spray rinse cycle* means a rinse cycle in which water is sprayed onto the clothes for a period of time without maintaining any specific water level in the clothes container.

1.27 *Standard* means a clothes washer which has a clothes container capacity of 1.6 ft^3 (45 L) or greater.

1.28 *Standby mode* means any mode in which the clothes washer is connected to a mains power source and offers one or more of the following user oriented or protective functions that may persist for an indefinite time:

(a) To facilitate the activation of other modes (including activation or deactivation of active mode) by remote switch (including remote control), internal sensor, or timer;

(b) Continuous functions, including information or status displays (including clocks) or sensor-based functions.

A timer is a continuous clock function (which may or may not be associated with a display) that provides regular scheduled tasks (*e.g.*, switching) and that operates on a continuous basis.

1.29 *Symbol usage*. The following identity relationships are provided to help clarify the symbology used throughout this procedure.

C—Capacity
C (with subscripts)—Cold Water Consumption
D—Energy Consumption for Removal of Moisture from Test Load
E—Electrical Energy Consumption
F—Load Usage Factor
H—Hot Water Consumption
HE—Hot Water Energy Consumption
ME—Machine Electrical Energy Consumption
P—Power
Q—Water Consumption
RMC—Remaining Moisture Content
S—Annual Hours
TUF—Temperature Use Factor
V—Temperature-Weighted Hot Water Consumption
W—Mass of Water
WC—Weight of Test Load After Extraction
WI—Initial Weight of Dry Test Load

Subscripts:

a or avg—Average Test Load
B—Part B of the Energy Test Cycle
c—Cold Wash (minimum wash temp.)

corr—Corrected (RMC values)
h—Hot Wash (maximum wash temp. ≤135 °F (57.2 °C))
ia—Inactive Mode
LP—Combined Low-Power Mode
m—Extra Hot Wash (maximum wash temp. >135 °F (57.2 °C))
n—Minimum Test Load
o—Off Mode
oi—Combined Off and Inactive Modes
T—Total
w—Warm Wash
ww—Warm Wash/Warm Rinse
x—Maximum Test Load

The following examples are provided to show how the above symbols can be used to define variables:

Em_X = ''Electrical Energy Consumption'' for an ''Extra Hot Wash'' and ''Maximum Test Load''
HE_{min} = ''Hot Water Energy Consumption'' for the ''Minimum Test Load''
P_{ia} = ''Power'' in ''Inactive Mode''
Qh_{min} = ''Water Consumption'' for a ''Hot Wash'' and ''Minimum Test Load''
TUF_m = ''Temperature Use Factor'' for an ''Extra Hot Wash''

1.30 *Temperature use factor* means, for a particular wash/rinse temperature setting, the percentage of the total number of wash loads that an average user would wash with that setting.

1.31 *Thermostatically controlled water valves* means clothes washer controls that have the ability to sense and adjust the hot and cold supply water.

1.32 *Uniformly distributed warm wash temperature selection(s)* means (A) multiple warm wash selections for which the warm wash water temperatures have a linear relationship with all discrete warm wash selections when the water temperatures are plotted against equally spaced consecutive warm wash selections between the hottest warm wash and the coldest warm wash. If the warm wash has infinite selections, the warm wash water temperature has a linear relationship with the distance on the selection device (*e.g.* dial angle or slide movement) between the hottest warm wash and the coldest warm wash. The criteria for a linear relationship as specified above is that the difference between the actual water temperature at any warm wash selection and the point where that temperature is depicted on the temperature/selection line formed by connecting the warmest and the coldest warm selections is less than ±5 percent. In all cases, the mean water temperature of the warmest and the coldest warm selections must coincide with the mean of the ''hot wash'' (maximum wash temperature ≤135 °F (57.2 °C)) and ''cold wash'' (minimum wash temperature) water temperatures within ±3.8 °F (±2.1 °C); or (B) on a clothes washer with only one warm wash temperature selection, a warm wash temperature selection with a water temperature that coincides with the mean of the ''hot wash'' (maximum wash temperature ≤135 °F (57.2 °C)) and ''cold wash'' (minimum wash temperature) water temperatures within ±3.8 °F (±2.1 °C).

1.33 *Warm rinse* means the hottest rinse temperature available on the machine.

1.34 *Warm wash* means all wash temperature selections that are below the maximum wash temperature ≤135 °F (57.2 °C) and above the minimum wash temperature.

1.35 *Water factor* means the quotient of the total weighted per-cycle water consumption for cold wash divided by the cubic foot (or liter) capacity of the clothes washer.

1.36 *Water-heating clothes washer* means a clothes washer where some or all of the hot water for clothes washing is generated by a water heating device internal to the clothes washer.

2. Testing Conditions

2.1 *Installation*. Install the clothes washer in accordance with manufacturer's instructions. For combined low-power mode testing, the product shall be installed in accordance with Section 5, Paragraph 5.2 of IEC 62301 (incorporated by reference; see §430.3), disregarding the provisions regarding batteries and the determination, classification, and testing of relevant modes.

2.2 *Electrical energy supply*.

2.2.1 *Supply voltage and frequency*. Maintain the electrical supply at the clothes washer terminal block within 2 percent of 120, 120/240, or 120/208Y volts as applicable to the particular terminal block wiring system and within 2 percent of the nameplate frequency as specified by the manufacturer. If the clothes washer has a dual voltage conversion capability, conduct test at the highest voltage specified by the manufacturer.

2.2.2 *Supply voltage waveform*. For the combined low-power mode testing, maintain the electrical supply voltage waveform indicated in Section 4, Paragraph 4.3.2 of IEC 62301. If the power measuring instrument used for testing is unable to measure and record the total harmonic content during the test measurement period, it is acceptable to measure and record the total harmonic content immediately before and after the test measurement period.

2.3 *Supply Water*.

2.3.1 *Clothes washers in which electrical energy consumption or water energy consumption are affected by the inlet water temperature. (For example, water heating clothes washers or clothes washers with thermostatically controlled water valves.)*. The temperature of the hot water supply at the water inlets shall not exceed 135 °F (57.2 °C) and the cold water supply at the water inlets shall not exceed 60 °F (15.6 °C). A water meter shall be installed in both the hot and cold water lines to measure water consumption.

2.3.2 *Clothes washers in which electrical energy consumption and water energy consumption are not affected by the inlet water temperature*. The temperature of the hot water supply shall be maintained at 135 °F ±5 °F (57.2 °C ±2.8 °C) and the cold water supply shall be maintained at 60 °F ±5 °F (15.6 °C ±2.8 °C). A water meter shall be installed in both the hot and cold water lines to measure water consumption.

2.4 *Water pressure*. The static water pressure at the hot and cold water inlet connection of the clothes washer shall be maintained at 35 pounds per square inch gauge (psig) ±2.5 psig (241.3 kPa ±17.2 kPa) when the water is flowing. The static water pressure for a single water inlet connection shall be maintained at 35 psig ±2.5 psig (241.3 kPa ±17.2 kPa) when the water is flowing. A water pressure gauge shall be installed in both the hot and cold water lines to measure water pressure.

2.5 *Instrumentation*. Perform all test measurements using the following instruments, as appropriate:

2.5.1 *Weighing scales*.

2.5.1.1 *Weighing scale for test cloth*. The scale shall have a resolution of no larger than 0.2 oz (5.7 g) and a maximum error no greater than 0.3 percent of the measured value.

2.5.1.2 *Weighing scale for clothes container capacity measurement*. The scale should have a resolution no larger than 0.50 lbs (0.23 kg) and a maximum error no greater than 0.5 percent of the measured value.

2.5.2 *Watt-hour meter*. The watt-hour meter shall have a resolution no larger than 1 Wh (3.6 kJ) and a maximum error no greater than 2 percent of the measured value for any demand greater than 50 Wh (180.0 kJ).

2.5.3 *Watt meter*. The watt meter used to measure combined low-power mode power consumption shall comply with the requirements specified in Section 4, Paragraph 4.4 of IEC 62301. If the power measuring instrument used for testing is unable to measure and record the crest factor, power factor, or maximum current ratio during the test measurement period, it is acceptable to measure and record the crest factor, power factor, and maximum current ratio immediately before and after the test measurement period.

2.5.4 *Temperature measuring device*. The device shall have an error no greater than ±1 °F (±0.6 °C) over the range being measured.

2.5.5 *Water meter*. The water meter shall have a resolution no larger than 0.1 gallons (0.4 liters) and a maximum error no greater than 2 percent for the water flow rates being measured.

2.5.6 *Water pressure gauge*. The water pressure gauge shall have a resolution of 1 pound per square inch gauge (psig) (6.9 kPa) and shall have an error no greater than 5 percent of any measured value.

2.6 *Test cloths*.

2.6.1 *Energy Test Cloth*. The energy test cloth shall be made from energy test cloth material, as specified in section 2.6.4 of this Appendix, that is 24 ±½ inches by 36 ±½ inches (61.0 ±1.3 cm by 91.4 ±1.3 cm) and has been hemmed to 22 ±½ inches by 34 ±½ inches (55.9 ±1.3 cm by 86.4 ±1.3 cm) before washing. The energy test cloth shall be clean and shall not be used for more than 60 test runs (after preconditioning as specified in 2.6.3 of this appendix). All energy test cloth must be permanently marked identifying the lot number of the material. Mixed lots of material shall not be used for testing a clothes washer.

2.6.2 *Energy Stuffer Cloth*. The energy stuffer cloth shall be made from energy test cloth material, as specified in section 2.6.4 of this Appendix, and shall consist of pieces of material that are 12 ±¼ inches by 12 ±¼ inches (30.5 ±0.6 cm by 30.5 ±0.6 cm) and have been hemmed to 10 ±¼ inches by 10 ±¼ inches (25.4 ±0.6 cm by 25.4 ±0.6 cm) before washing. The energy stuffer cloth shall be clean and shall not be used for more than 60 test runs (after preconditioning as specified in section 2.6.3 of this Appendix). All energy stuffer cloth must be permanently marked identifying the lot number of the material. Mixed lots of material shall not be used for testing a clothes washer.

2.6.3 *Preconditioning of Test Cloths*. The new test cloths, including energy test cloths and energy stuffer cloths, shall be pre-conditioned in a clothes washer in the following manner:

2.6.3.1 Perform 5 complete normal wash-rinse-spin cycles, the first two with AHAM Standard detergent Formula 3 and the last three without detergent. Place the test cloth in a clothes washer set at the maximum water level. Wash the load for ten minutes with a minimum fill of 20 gallons of soft water (17 ppm hardness or less) using 27.0 grams + 4.0 grams per pound of cloth load of AHAM Standard detergent Formula 3. The wash temperature is to be controlled to 135 °F ±5 °F (57.2 °C ±2.8 °C) and the rinse temperature is to be controlled to 60 °F ±5 °F (15.6 °C ±2.8 °C). Repeat the cycle with detergent and then repeat the cycle three additional times without detergent, bone drying the load between cycles (total of five wash and rinse cycles).

2.6.4 *Energy test cloth material*. The energy test cloths and energy stuffer cloths shall be made from fabric meeting the following specifications. The material should come from a roll of material with a width of approximately 63 inches and approximately 500 yards per roll. However, other sizes may be used if they fall within the specifications.

2.6.4.1 *Nominal fabric type*. Pure finished bleached cloth made with a momie or granite weave, which is nominally 50 percent cotton and 50 percent polyester.

2.6.4.2 The fabric weight specification shall be 5.60 ±0.25 ounces per square yard (190.0 ±8.4 g/m^2).

2.6.4.3 The thread count shall be 65 × 57 per inch (warp × fill), ±2 percent.

2.6.4.4 The warp yarn and filling yarn shall each have fiber content of 50 percent ±4 percent cotton, with the balance being polyester, and be open end spun, 15/1 ±5 percent cotton count blended yarn.

2.6.4.5 Water repellent finishes, such as fluoropolymer stain resistant finishes shall not be applied to the test cloth. The absence of such finishes shall be verified by:

2.6.4.5.1 AATCC Test Method 118–2007, (incorporated by reference; see § 430.3), for each new lot of test cloth (when purchased from the mill) to confirm the absence of Scotchguard™ or other water repellent finish (required scores of ''D'' across the board).

2.6.4.5.2 AATCC Test Method 79–2010, (incorporated by reference; see § 430.3), for each new lot of test cloth (when purchased from the mill) to confirm the absence of Scotchguard™ or other water repellent finish (time to absorb one drop should be on the order of 1 second).

2.6.4.6 The moisture absorption and retention shall be evaluated for each new lot of test cloth by the Standard Extractor Remaining Moisture Content (RMC) Test specified in section 2.6.5 of this Appendix.

2.6.4.6.1 Repeat the Standard Extractor RMC Test in section 2.6.5 of this Appendix three times.

2.6.4.6.2 An RMC correction curve shall be calculated as specified in section 2.6.6 of this Appendix.

2.6.4.7 The maximum shrinkage after preconditioning shall not be more than 5 percent of the length and width. Measure per AATCC Test Method 135–2010, (incorporated by reference; see § 430.3).

2.6.5 *Standard Extractor RMC Test Procedure.* The following procedure is used to evaluate the moisture absorption and retention characteristics of a lot of test cloth by measuring the RMC in a standard extractor at a specified set of conditions. Table 2.6.5 of this Appendix is the matrix of test conditions. In the table, ''g Force'' represents units of gravitational acceleration. When this matrix is repeated 3 times, a total of 60 extractor RMC test runs are required. For the purpose of the extractor RMC test, the test cloths may be used for up to 60 test runs (after preconditioning as specified in section 2.6.3 of this Appendix).

TABLE 2.6.5—MATRIX OF EXTRACTOR RMC TEST CONDITIONS

''g Force''	Warm soak		Cold soak	
	15 min. spin	4 min. spin	15 min. spin	4 min. spin
100				
200				
350				
500				
650				

2.6.5.1 The standard extractor RMC tests shall be run in a North Star Engineered Products Inc. (formerly Bock) Model 215 extractor (having a basket diameter of 20 inches, height of 11.5 inches, and volume of 2.09 ft^3), with a variable speed drive (North Star Engineered Products, P.O. Box 5127, Toledo, OH 43611) or an equivalent extractor with same basket design (*i.e.* diameter, height, volume, and hole configuration) and variable speed drive. Table 2.6.5.1 shows the extractor spin speed, in revolutions per minute (RPM), that shall be used to attain each required g-force level.

TABLE 2.6.5.1—EXTRACTOR SPIN SPEEDS FOR EACH TEST CONDITION

''g Force''	RPM
100	594 ±1
200	840 ±1
350	1111 ±1
500	1328 ±1
650	1514 ±1

2.6.5.2 *Test Load.* Test loads shall be comprised of randomly selected cloth at the beginning, middle and end of a lot. Test cloths shall be preconditioned in accordance with section 2.6.3 of this Appendix. The load size shall be 8.4 lbs. It is acceptable to use two test loads for standard extractor RMC tests, with each load used for half of the total number of required tests.

2.6.5.3 *Procedure.*

2.6.5.3.1 Using a dryer that complies with the temperature requirements specified in section 2.12 of this Appendix, dry the test cloth until it is ''bone-dry'' according to the definition in section 1.5 of this Appendix. Record the ''bone-dry'' weight of the test load (WI).

2.6.5.3.2 Prepare the test load for soak by grouping four test cloths into loose bundles. Bundles are created by hanging four cloths vertically from one corner and loosely wrapping the test cloth onto itself to form the bundle. Bundles should be wrapped loosely to

ensure consistency of water extraction. Bundles are then placed into the water to soak. Eight to nine bundles will be formed depending on the test load. The ninth bundle may not equal four cloths but can incorporate energy stuffer cloths to help offset the size difference.

2.6.5.3.3 Soak the test load for 20 minutes in 10 gallons of soft (<17 ppm) water. The entire test load shall be submerged. The water temperature shall be 100 °F ±5 °F (37.8 °C ±2.8 °C) at all times between the start and end of the soak.

2.6.5.3.4 Remove the test load and allow each of the test cloth bundles to drain over the water bath for a maximum of 5 seconds.

2.6.5.3.5 Manually place the test cloth bundles in the basket of the extractor, distributing them evenly by eye. The draining and loading process shall take no longer than 1 minute. Spin the load at a fixed speed corresponding to the intended centripetal acceleration level (measured in units of the acceleration of gravity, g) ±1g for the intended time period ±5 seconds. The timer shall begin when the extractor meets the required spin speed for each test.

2.6.5.3.6 Record the weight of the test load immediately after the completion of the extractor spin cycle (WC).

2.6.5.3.7 Calculate the remaining moisture content of the test load as (WC–WI)/WI.

2.6.5.3.8 It is not necessary to drain the soak tub if the water bath is corrected for water level and temperature before the next extraction.

2.6.5.3.9 It is not necessary to dry the test load in between extraction runs. However, the bone dry weight shall be checked after every 12 extraction runs to make sure the bone dry weight is within tolerance (8.4 ±0.1 lb).

2.6.5.3.10 The test load must be soaked and extracted once following bone drying, before continuing with the remaining extraction runs. This extraction shall be performed at the same spin speed used for the extraction run prior to bone drying, for a time period of 4 minutes. Either warm or cold soak temperature may be used.

2.6.5.3.11 The remaining moisture content of the test load shall be measured at five g levels: 100 g, 200 g, 350 g, 500 g, and 650 g, using two different spin times at each g level: 4 minutes and 15 minutes.

2.6.5.4 Repeat section 2.6.5.3 of this Appendix using soft (<17 ppm) water at 60 °F ±5 °F (15.6 °C ±2.8 °C).

2.6.6 *Calculation of RMC correction curve.*

2.6.6.1 Average the values of 3 test runs, and fill in Table 2.6.5 of this appendix. Perform a linear least-squares fit to determine coefficients A and B such that the standard RMC values shown in Table 2.6.6.1 of this appendix ($RMC_{standard}$) are linearly related to the RMC values measured in section 2.6.5 of this appendix (RMC_{cloth}):

$$RMC_{standard} \sim A * RMC_{cloth} + B$$

where A and B are coefficients of the linear least-squares fit.

TABLE 2.6.6.1—STANDARD RMC VALUES (RMC STANDARD)

"g Force"	RMC percentage			
	Warm soak		Cold soak	
	15 min. spin (percent)	4 min. spin (percent)	15 min. spin (percent)	4 min. spin (percent)
100	45.9	49.9	49.7	52.8
200	35.7	40.4	37.9	43.1
350	29.6	33.1	30.7	35.8
500	24.2	28.7	25.5	30.0
650	23.0	26.4	24.1	28.0

2.6.6.2 Perform an analysis of variance with replication test using two factors, spin speed and lot, to check the interaction of speed and lot. Use the values from Table 2.6.5 and Table 2.6.6.1 of this Appendix in the calculation. The ''P'' value of the F-statistic for interaction between spin speed and lot in the variance analysis shall be greater than or equal to 0.1. If the ''P'' value is less than 0.1, the test cloth is unacceptable. ''P'' is a theoretically based measure of interaction based on an analysis of variance.

2.6.7 *Application of the RMC correction curve.*

2.6.7.1 Using the coefficients A and B calculated in section 2.6.6.1 of this Appendix:

$$RMC_{corr} = A \times RMC + B$$

2.6.7.2 Apply this RMC correction curve to measured RMC values in sections 3.8.2.6, 3.8.3.2, and 3.8.3.4 of this Appendix.

2.7 *Test Load Sizes.* Maximum, minimum, and, when required, average test load sizes shall be determined using Table 5.1 of this Appendix and the clothes container capacity as measured in sections 3.1.1 through 3.1.5 of this Appendix. Test loads shall consist of energy test cloths, except that adjustments to the test loads to achieve proper weight can be made by the use of energy stuffer cloths with no more than 5 stuffer cloths per load.

2.8 *Use of Test Loads*. Table 2.8 of this Appendix defines the test load sizes and corresponding water fill settings which are to be used when measuring water and energy consumptions. Adaptive water fill control system and manual water fill control system are defined in section 1 of this Appendix:

TABLE 2.8—TEST LOAD SIZES AND WATER FILL SETTINGS REQUIRED

Manual water fill control system		Adaptive water fill control system	
Test load size	Water fill setting	Test load size	Water fill setting
Max	Max	Max	As determined by the Clothes Washer.
Min	Min	Avg Min.	

2.8.1 The test load sizes to be used to measure RMC are specified in section 3.8.1 of this Appendix.

2.8.2 Test loads for energy and water consumption measurements shall be bone dry prior to the first cycle of the test, and dried to a maximum of 104 percent of bone dry weight for subsequent testing.

2.8.3 Load the energy test cloths by grasping them in the center, shaking them to hang loosely and then put them into the clothes container prior to activating the clothes washer.

2.9 *Pre-conditioning of Clothes Washer*.

2.9.1 *Non-water-heating clothes washer*. If the clothes washer has not been filled with water in the preceding 96 hours, pre-condition it by running it through a cold rinse cycle and then draining it to ensure that the hose, pump, and sump are filled with water.

2.9.2 *Water-heating clothes washer*. If the clothes washer has not been filled with water in the preceding 96 hours, or if it has not been in the test room at the specified ambient conditions for 8 hours, pre-condition it by running it through a cold rinse cycle and then draining it to ensure that the hose, pump, and sump are filled with water.

2.10 *Wash time setting*. If one wash time is prescribed in the energy test cycle, that shall be the wash time setting; otherwise, the wash time setting shall be the higher of either the minimum or 70 percent of the maximum wash time available in the energy test cycle, regardless of the labeling of suggested dial locations. If the clothes washer is equipped with an electromechanical dial controlling wash time, reset the dial to the minimum wash time and then turn it in the direction of increasing wash time to reach the appropriate setting. If the appropriate setting is passed, return the dial to the minimum wash time and then turn in the direction of increasing wash time until the setting is reached.

2.11 *Test room temperature*. For all clothes washers, maintain the test room ambient air temperature at 75 ±5 °F (23.9 ±2.8 °C) for active mode testing and combined low-power mode testing. Do not use the test room ambient air temperature conditions specified in Section 4, Paragraph 4.2 of IEC 62301 for combined low-power mode testing.

2.12 *Bone dryer temperature*. The dryer used for bone drying must heat the test cloth and energy stuffer cloths above 210 °F (99 °C).

2.13 *Energy consumption for the purpose of certifying the cycle selection(s) to be included in Part (B) of the energy test cycle definition*. Where multiple alternate cycle selections offer a wash/rinse temperature selection for which a TUF has been developed, and that is not available on the cycle selection recommended by the manufacturer for washing cotton or linen clothes described in Part (A) of the energy test cycle definition, the alternate cycle selection with the highest energy consumption for that TUF, as measured according to this section, shall be included in the energy test cycle.

2.13.1 For the TUF being considered under this section, establish the testing conditions set forth in section 2 of this test procedure. Select the applicable cycle selection and temperature selection. Use the manufacturer default settings for agitation/tumble operation, soil level, spin speed(s), wash times, rinse times, and all other wash parameters or optional features applicable to that cycle selection, including water heating time for water heating clothes washers.

2.13.2 Use the clothes washer's maximum test load size, determined from Table 5.1, for testing under this section.

2.13.3 For clothes washers with a manual water fill control system, user-adjustable adaptive water fill control system, or adaptive water fill control system with alternate manual water fill control system, use the water fill selector setting resulting in the maximum water level available for each cycle selection for testing under this section.

2.13.4 Each wash cycle tested under this section shall include the entire active washing mode and exclude any delay start or cycle finished modes.

2.13.5 Measure each cycle selection's electrical energy consumption (E_B) and hot water consumption (H_B). Calculate the total energy consumption for each cycle selection (E_{TB}), as follows:

$$E_{TB} = E_B + (H_B \times T \times K)$$

Where:

E_B is the electrical energy consumption, expressed in kilowatt-hours per cycle.

H_B is the hot water consumption, expressed in gallons per cycle.

T = temperature rise = 75 °F (41.7 °C)

K = Water specific heat in kilowatt-hours per gallon per degree F = 0.00240 kWh/gal- °F (0.00114 kWh/L- °C)

3. TEST MEASUREMENTS

3.1 *Clothes container capacity*. Measure the entire volume which a clothes load could occupy within the clothes container during active mode washer operation according to the following procedures:

3.1.1 Place the clothes washer in such a position that the uppermost edge of the clothes container opening is leveled horizontally, so that the container will hold the maximum amount of water. For front-loading clothes washers, the shipping bolts and door seal shall remain in place during the capacity measurement.

3.1.2 Line the inside of the clothes container with 2 mil (0.051 mm) plastic sheet. All clothes washer components which occupy space within the clothes container and which are recommended for use with the energy test cycle shall be in place and shall be lined with 2 mil (0.051 mm) plastic sheet to prevent water from entering any void space.

3.1.3 Record the total weight of the machine before adding water.

3.1.4 Fill the clothes container manually with either 60 °F ±5 °F (15.6 °C ±2.8 °C) or 100 °F ±10 °F (37.8 °C ±5.5 °C) water, with the door open. For a top-loading, vertical-axis clothes washer, fill the clothes container to the uppermost edge of the rotating portion, including any balance ring. For a front-loading, horizontal-axis clothes washer, fill the clothes container to the uppermost edge that is in contact with the door seal. For all clothes washers, any volume which cannot be occupied by the clothing load during operation must be excluded from the measurement. Measure and record the weight of water, W, in pounds.

3.1.5 The clothes container capacity is calculated as follows:

$$C = W/d$$

Where:

C = Capacity in cubic feet (liters).

W = Mass of water in pounds (kilograms).

d = Density of water (62.0 lbs/ft^3 for 100 °F (993 kg/m^3 for 37.8 °C) or 62.3 lbs/ft^3 for 60 °F (998 kg/m^3 for 15.6 °C)).

3.2 *Procedure for measuring water and energy consumption values on all automatic and semi-automatic washers*. All energy consumption tests shall be performed under the energy test cycle(s), unless otherwise specified. Table 3.2 of this Appendix defines the sections below which govern tests of particular clothes washers, based on the number of wash/rinse temperature selections available on the model, and also, in some instances, method of water heating. The procedures prescribed are applicable regardless of a clothes washer's washing capacity, loading port location, primary axis of rotation of the clothes container, and type of control system.

3.2.1 *Inlet water temperature and the wash/rinse temperature settings*.

3.2.1.1 For automatic clothes washers, set the wash/rinse temperature selection control to obtain the wash water temperature selection desired (extra hot, hot, warm, or cold) and cold rinse, and open both the hot and cold water faucets.

3.2.1.2 For semi-automatic washers:

(1) For hot water temperature, open the hot water faucet completely and close the cold water faucet;

(2) For warm inlet water temperature, open both hot and cold water faucets completely;

(3) For cold water temperature, close the hot water faucet and open the cold water faucet completely.

3.2.1.3 *Determination of warm wash water temperature(s) to decide whether a clothes washer has uniformly distributed warm wash temperature selections*. The wash water temperature, Tw, of each warm water wash selection shall be calculated or measured.

(1) For non-water heating clothes washers, calculate Tw as follows:

$$Tw(\,°F) = ((Hw \times 135\ °F) + (Cw \times 60\ °F))/(Hw + Cw)$$

or

$$Tw(\,°C) = ((Hw \times 57.2\ °C) + (Cw \times 15.6\ °C))/(Hw + Cw)$$

Where:

Hw = Hot water consumption of a warm wash.

Cw = Cold water consumption of a warm wash.

(2) For water-heating clothes washers, measure and record the temperature of each warm wash selection after fill.

3.2.2 Total water consumption during the energy test cycle shall be measured, including hot and cold water consumption during wash, deep rinse, and spray rinse.

3.2.3 *Clothes washers with adaptive water fill/manual water fill control systems*.

3.2.3.1 *Clothes washers with adaptive water fill control system and alternate manual water fill control systems*. If a clothes washer with an adaptive water fill control system allows consumer selection of manual controls as an alternative, then both manual and adaptive modes shall be tested and, for each mode, the energy consumption (HE_T, ME_T, and D_E) and water consumption (Q_T), values shall be calculated as set forth in section 4 of this Appendix. Then the average of the two values (one from each mode, adaptive and manual)

for each variable shall be used in section 4 of this Appendix for the clothes washer.

3.2.3.2 *Clothes washers with adaptive water fill control system.*

3.2.3.2.1 Not user adjustable. The maximum, minimum, and average water levels as defined in the following sections shall be interpreted to mean that amount of water fill which is selected by the control system when the respective test loads are used, as defined in Table 2.8 of this Appendix. The load usage factors which shall be used when calculating energy consumption values are defined in Table 4.1.3 of this Appendix.

3.2.3.2.2 User adjustable. Four tests shall be conducted on clothes washers with user adjustable adaptive water fill controls which affect the relative wash water levels. The first test shall be conducted with the maximum test load and with the adaptive water fill control system set in the setting that will give the most energy intensive result. The second test shall be conducted with the minimum test load and with the adaptive water fill control system set in the setting that will give the least energy intensive result. The third test shall be conducted with the average test load and with the adaptive water fill control system set in the setting that will give the most energy intensive result for the given test load. The fourth test shall be conducted with the average test load and with the adaptive water fill control system set in the setting that will give the least energy intensive result for the given test load. The energy and water consumption for the average test load and water level shall be the average of the third and fourth tests.

3.2.3.3 *Clothes washers with manual water fill control system.* In accordance with Table 2.8 of this Appendix, the water fill selector shall be set to the maximum water level available on the clothes washer for the maximum test load size and set to the minimum water level for the minimum test load size. The load usage factors which shall be used when calculating energy consumption values are defined in Table 4.1.3 of this Appendix.

TABLE 3.2—TEST SECTION REFERENCE

Max. wash temp. available	≤135 °F (57.2 °C)			>135 °F (57.2 °C)**	
Number of wash temp. selections	1	2	>2	3	>3
Test sections required to be followed	.....	.....	.....	3.3	3.3
	.....	3.4	3.4	.....	3.4
	.....	.....	3.5	3.5	3.5
	3.6	3.6	3.6	3.6	3.6
	.....	.....	*3.7	*3.7	*3.7
	3.8	3.8	3.8	3.8	3.8

*Only applicable to machines with warm rinse.
**Only applicable to water heating clothes washers on which the maximum wash temperature available exceeds 135 °F (57.2 °C).

3.3 *''Extra Hot Wash'' (Max Wash Temp >135 °F (57.2 °C)) for water heating clothes washers only.* Water and electrical energy consumption shall be measured for each water fill level and/or test load size as specified in sections 3.3.1 through 3.3.3 of this Appendix for the hottest wash setting available.

3.3.1 *Maximum test load and water fill.* Hot water consumption (Hm_X), cold water consumption (Cm_X), and electrical energy consumption (Em_X) shall be measured for an extra hot wash/cold rinse energy test cycle, with the controls set for the maximum water fill level. The maximum test load size is to be used and shall be determined per Table 5.1 of this Appendix.

3.3.2 *Minimum test load and water fill.* Hot water consumption (Hm_n), cold water consumption (Cm_n), and electrical energy consumption (Em_n) shall be measured for an extra hot wash/cold rinse energy test cycle, with the controls set for the minimum water fill level. The minimum test load size is to be used and shall be determined per Table 5.1 of this Appendix.

3.3.3 *Average test load and water fill.* For clothes washers with an adaptive water fill control system, measure the values for hot water consumption (Hm_a), cold water consumption (Cm_a), and electrical energy consumption (Em_a) for an extra hot wash/cold rinse energy test cycle, with an average test load size as determined per Table 5.1 of this Appendix.

3.4 *''Hot Wash'' (Max Wash Temp ≤135 °F (57.2 °C)).* Water and electrical energy consumption shall be measured for each water fill level and/or test load size as specified in sections 3.4.1 through 3.4.3 of this Appendix for a 135 °F (57.2 °C) wash, if available, or for the hottest selection less than 135 °F (57.2 °C).

3.4.1 *Maximum test load and water fill.* Hot water consumption (Hh_X), cold water consumption (Ch_X), and electrical energy consumption (Eh_X) shall be measured for a hot wash/cold rinse energy test cycle, with the controls set for the maximum water fill level. The maximum test load size is to be used and shall be determined per Table 5.1 of this Appendix.

3.4.2 *Minimum test load and water fill.* Hot water consumption (Hh_n), cold water consumption (Ch_n), and electrical energy consumption (Eh_n) shall be measured for a hot wash/cold rinse energy test cycle, with the controls set for the minimum water fill level. The minimum test load size is to be used and shall be determined per Table 5.1 of this Appendix.

3.4.3 *Average test load and water fill.* For clothes washers with an adaptive water fill control system, measure the values for hot water consumption (Hh_a), cold water consumption (Ch_a), and electrical energy consumption (Eh_a) for a hot wash/cold rinse energy test cycle, with an average test load size as determined per Table 5.1 of this Appendix.

3.5 *''Warm Wash.''* Water and electrical energy consumption shall be determined for each water fill level and/or test load size as specified in sections 3.5.1 through 3.5.2.3 of this Appendix for the applicable warm water wash temperature(s) with a cold rinse.

3.5.1 *Clothes washers with uniformly distributed warm wash temperature selection(s).* The reportable values to be used for the warm water wash setting shall be the arithmetic average of the measurements for the hot and cold wash selections. This is a calculation only; no testing is required.

3.5.2 *Clothes washers that lack uniformly distributed warm wash temperature selections.* For a clothes washer with fewer than four discrete warm wash selections, test all warm wash temperature selections. For a clothes washer that offers four or more warm wash selections, test at all discrete selections, or test at 25 percent, 50 percent, and 75 percent positions of the temperature selection device between the hottest hot (≤135 °F (57.2 °C)) wash and the coldest cold wash. If a selection is not available at the 25, 50 or 75 percent position, in place of each such unavailable selection use the next warmer setting. Each reportable value to be used for the warm water wash setting shall be the arithmetic average of all tests conducted pursuant to this section.

3.5.2.1 *Maximum test load and water fill.* Hot water consumption (Hw_X), cold water consumption (Cw_X), and electrical energy consumption (Ew_X) shall be measured with the controls set for the maximum water fill level. The maximum test load size is to be used and shall be determined per Table 5.1 of this Appendix.

3.5.2.2 *Minimum test load and water fill.* Hot water consumption (Hw_n), cold water consumption (Cw_n), and electrical energy consumption (Ew_n) shall be measured with the controls set for the minimum water fill level. The minimum test load size is to be used and shall be determined per Table 5.1 of this Appendix.

3.5.2.3 *Average test load and water fill.* For clothes washers with an adaptive water fill control system, measure the values for hot water consumption (Hw_a), cold water consumption (Cw_a), and electrical energy consumption (Ew_a) with an average test load size as determined per Table 5.1 of this Appendix.

3.6 *''Cold Wash'' (Minimum Wash Temperature Selection).* Water and electrical energy consumption shall be measured for each water fill level and/or test load size as specified in sections 3.6.1 through 3.6.3 of this Appendix for the coldest wash temperature selection available. For a clothes washer that offers two or more wash temperature settings labeled as cold, such as ''Cold'' and ''Tap Cold'', the setting with the minimum wash temperature shall be considered the cold wash. If any of the other cold wash temperature settings add hot water to raise the wash temperature above the cold water supply temperature, as defined in section 2.3 of this Appendix, those setting(s) shall be considered warm wash setting(s), as defined in section 1.34 of this Appendix. If none of the cold wash temperature settings add hot water for any of the water fill levels or test load sizes required for the energy test cycle, the wash temperature setting labeled as ''Cold'' shall be considered the cold wash, and the other wash temperature setting(s) labeled as cold shall not be required for testing.

3.6.1 *Maximum test load and water fill.* Hot water consumption (Hc_X), cold water consumption (Cc_X), and electrical energy consumption (Ec_X) shall be measured for a cold wash/cold rinse energy test cycle, with the controls set for the maximum water fill level. The maximum test load size is to be used and shall be determined per Table 5.1 of this Appendix.

3.6.2 *Minimum test load and water fill.* Hot water consumption (Hc_n), cold water consumption (Cc_n), and electrical energy consumption (Ec_n) shall be measured for a cold wash/cold rinse energy test cycle, with the controls set for the minimum water fill level. The minimum test load size is to be used and shall be determined per Table 5.1 of this Appendix.

3.6.3 *Average test load and water fill.* For clothes washers with an adaptive water fill control system, measure the values for hot water consumption (Hc_a), cold water consumption (Cc_a), and electrical energy consumption (Ec_a) for a cold wash/cold rinse energy test cycle, with an average test load size as determined per Table 5.1 of this Appendix.

3.7 *''Warm Wash/Warm Rinse.''* Water and electrical energy consumption shall be determined for each water fill level and/or test load size as specified in sections 3.7.2.1 through 3.7.2.3 of this Appendix for the applicable warm wash temperature selection as

described in section 3.7.1 or 3.7.2 of this Appendix and the hottest available rinse temperature selection.

3.7.1 *Clothes washers with uniformly distributed warm wash temperature selection(s).* Test the warm wash/warm rinse cycle at the wash temperature selection with the temperature selection device at the 50 percent position between the hottest hot (≤135 °F (57.2 °C)) wash and the coldest cold wash.

3.7.2 *Clothes washers that lack uniformly distributed warm wash temperature selections.* For a clothes washer with fewer than four discrete warm wash selections, test all warm wash temperature selections for which a warm rinse is available. For a clothes washer that offers four or more warm wash selections, test at all discrete selections for which a warm rinse is available, or test at 25 percent, 50 percent, and 75 percent positions of the temperature selection device between the hottest hot (≤135 °F (57.2 °C)) wash and the coldest cold wash. If a selection is not available at the 25, 50, or 75 percent position, in place of each such unavailable selection use the next warmer setting. Each reportable value to be used for the warm wash/warm rinse setting shall be the arithmetic average of all tests conducted pursuant to this section.

3.7.2.1 *Maximum test load and water fill.* Hot water consumption (Hww_X), cold water consumption (Cww_X), and electrical energy consumption (Eww_X) shall be measured with the controls set for the maximum water fill level. The maximum test load size is to be used and shall be determined per Table 5.1 of this Appendix.

3.7.2.2 *Minimum test load and water fill.* Hot water consumption (Hww_n), cold water consumption (Cww_n), and electrical energy consumption (Eww_n) shall be measured with the controls set for the minimum water fill level. The minimum test load size is to be used and shall be determined per Table 5.1 of this Appendix.

3.7.2.3 *Average test load and water fill.* For clothes washers with an adaptive water fill control system, measure the values for hot water consumption (Hww_a), cold water consumption (Cww_a), and electrical energy consumption (Eww_a) with an average test load size as determined per Table 5.1 of this Appendix.

3.8 *Remaining Moisture Content:*

3.8.1 The wash temperature will be the same as the rinse temperature for all testing. Use the maximum test load as defined in Table 5.1 of this Appendix for testing.

3.8.2 *For clothes washers with cold rinse only:*

3.8.2.1 Record the actual ''bone dry'' weight of the test load (WI_X), then place the test load in the clothes washer.

3.8.2.2 Set water level selector to maximum fill.

3.8.2.3 Run the energy test cycle.

3.8.2.4 Record the weight of the test load immediately after completion of the energy test cycle (WC_X).

3.8.2.5 Calculate the remaining moisture content of the maximum test load, RMC_X, defined as:

$$RMC_X = (WC_X - WI_X)/WI_X$$

3.8.2.6 Apply the RMC correction curve described in section 2.6.7 of this Appendix to calculate the corrected remaining moisture content, RMC_{corr}, expressed as a percentage, which shall be the final RMC used in section 4.3 of this Appendix:

$$RMC_{corr} = (A \times RMC_X + B) \times 100\%$$

Where:

A and B are the coefficients of the RMC correction curve as defined in section 2.6.6.1 of this Appendix.

RMC_X = As defined in section 3.8.2.5 of this Appendix.

3.8.3 *For clothes washers with cold and warm rinse options:*

3.8.3.1 Complete sections 3.8.2.1 through 3.8.2.4 of this Appendix for cold rinse.

Calculate the remaining moisture content of the maximum test load for cold rinse, RMC_{COLD}, defined as:

$$RMC_{COLD} = (WC_X - WI_X)/WI_X$$

3.8.3.2 Apply the RMC correction curve described in section 2.6.7 of this Appendix to calculate the corrected remaining moisture content for cold rinse, $RMC_{COLD,corr}$, expressed as a percentage, as follows:

$$RMC_{COLD,corr} = (A \times RMC_{COLD} + B) \times 100\%$$

Where:

A and B are the coefficients of the RMC correction curve as defined in section 2.6.6.1 of this Appendix.

RMC_{COLD} = As defined in section 3.8.3.1 of this Appendix.

3.8.3.3 Complete sections 3.8.2.1 through 3.8.2.4 of this Appendix for warm rinse. Calculate the remaining moisture content of the maximum test load for warm rinse, RMC_{WARM}, defined as:

$$RMC_{WARM} = (WC_X - WI_X)/WI_X$$

3.8.3.4 Apply the RMC correction curve described in section 2.6.7 of this Appendix to calculate the corrected remaining moisture content for warm rinse, $RMC_{WARM,corr}$, expressed as a percentage, as follows:

$$RMC_{WARM,corr} = (A \times RMC_{WARM} + B) \times 100\%$$

Where:

A and B are the coefficients of the RMC correction curve as defined in section 2.6.6.1 of this Appendix.

RMC_{WARM} = As defined in section 3.8.3.3 of this Appendix.

3.8.3.5 Calculate the corrected remaining moisture content of the maximum test load, RMC_{corr}, expressed as a percentage, which

shall be the final RMC used in section 4.3 of this Appendix:

$RMC_{corr} = RMC_{COLD,corr} \times (1 - TUF_{ww}) + RMC_{WARM,corr} \times (TUF_{ww})$

Where:

$RMC_{COLD,corr}$ = As defined in section 3.8.3.2 of this Appendix.

$RMC_{WARM,corr}$ = As defined in section 3.8.3.4 of this Appendix.

TUF_{ww} is the temperature use factor for warm rinse as defined in Table 4.1.1 of this Appendix.

3.8.4 Clothes washers that have options such as multiple selections of spin speeds or spin times that result in different RMC values and that are available in the energy test cycle, shall be tested at the maximum and minimum extremes of the available options, excluding any ''no spin'' (zero spin speed) settings, in accordance with requirements in section 3.8.2 or 3.8.3 of this Appendix, as applicable. The calculated $RMC_{corr,max\ extraction}$ and $RMC_{corr,min\ extraction}$ at the maximum and minimum settings, respectively, shall be combined as follows and the final corrected RMC to be used in section 4.3 of this Appendix shall be:

$RMC_{corr} = 0.75 \times RMC_{corr,max\ extraction} + 0.25 \times RMC_{corr,min\ extraction}$

Where:

$RMC_{corr,max\ extraction}$ is the corrected remaining moisture content using the maximum spin setting, calculated according to section 3.8.2 or 3.8.3 of this Appendix, as applicable.

$RMC_{corr,min\ extraction}$ is the corrected remaining moisture content using the minimum spin setting, calculated according to section 3.8.2 or 3.8.3 of this Appendix, as applicable.

3.9 *Combined low-power mode power*. Connect the clothes washer to a watt meter as specified in section 2.5.3 of this Appendix. Establish the testing conditions set forth in sections 2.1, 2.2 and 2.11 of this Appendix. For clothes washers that take some time to enter a stable state from a higher power state as discussed in Section 5, Paragraph 5.1, note 1 of IEC 62301 (incorporated by reference; see §430.3), allow sufficient time for the clothes washer to reach the lower power state before proceeding with the test measurement. Follow the test procedure for the sampling method specified in Section 5, Paragraph 5.3.2 of IEC 62301 for testing in each possible mode as described in sections 3.9.1 and 3.9.2 of this Appendix.

3.9.1 If a clothes washer has an inactive mode as defined in section 1.15 of this Appendix, measure and record the average inactive mode power of the clothes washer, P_{ia}, in watts.

3.9.2 If a clothes washer has an off mode as defined in section 1.24 of this Appendix, measure and record its average off mode power, P_o, in watts.

4. CALCULATION OF DERIVED RESULTS FROM TEST MEASUREMENTS

4.1 *Hot water and machine electrical energy consumption of clothes washers*.

4.1.1 *Per-cycle temperature-weighted hot water consumption for maximum, average, and minimum water fill levels using each appropriate load size as defined in section 2.8 and Table 5.1 of this Appendix*. Calculate for the cycle under test the per-cycle temperature-weighted hot water consumption for the maximum water fill level, Vh_X, the average water fill level, Vh_a, and the minimum water fill level, Vh_n, expressed in gallons per cycle (or liters per cycle) and defined as:

(a) $Vh_X = [Hm_X \times TUF_m] + [Hh_X \times TUF_h] + [Hw_X \times TUF_w] + [Hww_X \times TUF_{ww}] + [Hc_X \times TUF_c]$

(b) $Vh_a = [Hm_a \times TUF_m] + [Hh_a \times TUF_h] + [Hw_a \times TUF_w] + [Hww_a \times TUF_{ww}] + [Hc_a \times TUF_c]$

(c) $Vh_n = [Hm_n \times TUF_m] + [Hh_n \times TUF_h] + [Hw_n \times TUF_w] + [Hww_n \times TUF_{ww}] + [Hc_n \times TUF_c]$

Where:

Hm_X, Hm_a, and Hm_n, are reported hot water consumption values, in gallons per-cycle (or liters per cycle), at maximum, average, and minimum water fill, respectively, for the extra hot wash cycle with the appropriate test loads as defined in section 2.8 of this Appendix.

Hh_X, Hh_a, and Hh_n, are reported hot water consumption values, in gallons per-cycle (or liters per cycle), at maximum, average, and minimum water fill, respectively, for the hot wash cycle with the appropriate test loads as defined in section 2.8 of this Appendix.

Hw_X, Hw_a, and Hw_n, are reported hot water consumption values, in gallons per-cycle (or liters per cycle), at maximum, average, and minimum water fill, respectively, for the warm wash cycle with the appropriate test loads as defined in section 2.8 of this Appendix.

Hww_X, Hww_a, and Hww_n, are reported hot water consumption values, in gallons per-cycle (or liters per cycle), at maximum, average, and minimum water fill, respectively, for the warm wash/warm rinse cycle with the appropriate test loads as defined in section 2.8 of this Appendix.

Hc_X, Hc_a, and Hc_n, are reported hot water consumption values, in gallons per-cycle (or liters per cycle), at maximum, average, and minimum water fill, respectively, for the cold wash cycle with the appropriate test loads as defined in section 2.8 of this Appendix.

TUF_m, TUF_h, TUF_w, TUF_{ww}, and TUF_c are temperature use factors for extra hot wash, hot wash, warm wash, warm wash/warm rinse, and cold wash temperature

selections, respectively, and are as defined in Table 4.1.1 of this Appendix.

TABLE 4.1.1—TEMPERATURE USE FACTORS

Max wash temp available	≤135 °F (57.2 °C)			>135 °F (57.2 °C)	
No. wash temp selections	Single	2 Temps	>2 Temps	3 Temps	>3 Temps
TUF_m (extra hot)	.....	.....	.....	0.14	0.05
TUF_h (hot)	.....	0.63	0.14	.....	0.09
TUF_{ww} (warm/warm)	.....	.....	*0.27	*0.27	*0.27
TUF_w (warm)	.....	.....	**0.22/0.49	**0.22/0.49	**0.22/0.49
TUF_c (cold)	1.00	0.37	0.37	0.37	0.37

* Only applicable to machines offering a warm/warm cycle. For machines with no warm/warm cycle, TUF_{ww} (warm/warm) should be zero.

** For machines offering a warm/warm cycle, TUF_w (warm) should be 0.22. For machines with no warm/warm cycle, TUF_w (warm) should be 0.49.

4.1.2 *Total per-cycle hot water energy consumption for all maximum, average, and minimum water fill levels tested.* Calculate the total per-cycle hot water energy consumption for the maximum water fill level, HE_{max}, the minimum water fill level, HE_{min}, and the average water fill level, HE_{avg}, expressed in kilowatt-hours per cycle and defined as:

(a) $HE_{max} = [Vh_X \times T \times K]$=Total energy when a maximum load is tested.

(b) $HE_{avg} = [Vh_a \times T \times K]$=Total energy when an average load is tested.

(c) $HE_{min} = [Vh_n \times T \times K]$=Total energy when a minimum load is tested.

Where:

Vh_X, Vh_a, and Vh_n are as defined in section 4.1.1 of this Appendix.

T = Temperature rise = 75 °F (41.7 °C).

K = Water specific heat in kilowatt-hours per gallon per degree F = 0.00240 kWh/gal- °F (0.00114 kWh/L- °C).

4.1.3 *Total weighted per-cycle hot water energy consumption.* Calculate the total weighted per-cycle hot water energy consumption, HE_T, expressed in kilowatt-hours per cycle and defined as:

$HE_T = [HE_{max} \times F_{max}] + [HE_{avg} \times F_{avg}] + HE_{min} \times F_{min}]$

Where:

HE_{max}, HE_{avg}, and HE_{min} are as defined in section 4.1.2 of this Appendix.

F_{max}, F_{avg}, and F_{min} are the load usage factors for the maximum, average, and minimum test loads based on the size and type of the control system on the washer being tested. The values are as shown in Table 4.1.3 of this Appendix.

TABLE 4.1.3—LOAD USAGE FACTORS

Water fill control system	Manual	Adaptive
F_{max} =	[1] 0.72	[2] 0.12
F_{avg} =	.....	[2] 0.74
F_{min} =	[1] 0.28	[2] 0.14

[1] Reference 3.2.3.3.
[2] Reference 3.2.3.2.

4.1.4 *Total per-cycle hot water energy consumption using gas-heated or oil-heated water.* Calculate for the energy test cycle the per-cycle hot water consumption, HE_{TG}, using gas-heated or oil-heated water, expressed in Btu per cycle (or megajoules per cycle) and defined as:

$HE_{TG} = HE_T \times 1/e \times 3412$ Btu/kWh or $HE_{TG} = HE_T \times 1/e \times 3.6$ MJ/kWh

Where:

e = Nominal gas or oil water heater efficiency = 0.75.

HE_T = As defined in section 4.1.3 of this Appendix.

4.1.5 *Per-cycle machine electrical energy consumption for all maximum, average, and minimum test load sizes.* Calculate the total per-cycle machine electrical energy consumption for the maximum water fill level, ME_{max}, the average water fill level, ME_{avg}, and the minimum water fill level, ME_{min}, expressed in kilowatt-hours per cycle and defined as:

(a) $ME_{max} = [Em_X \times TUF_m] + [Eh_X \times TUF_h] + [Ew_X \times TUF_w] + [Eww_X \times TUF_{ww}] + [Ec_X \times TUF_c]$

(b) $ME_{avg} = [Em_a \times TUF_m] + [Eh_a \times TUF_h] + [Ew_a \times TUF_w] + [Eww_a \times TUF_{ww}] + [Ec_a \times TUF_c]$

(c) $ME_{min} = [Em_n \times TUF_m] + [Eh_n \times TUF_h] + [Ew_n \times TUF_w] + [Eww_n \times TUF_{ww}] + [Ec_n \times TUF_c]$

Where:

Em_X, Em_a, and Em_n, are reported electrical energy consumption values, in kilowatt-hours per cycle, at maximum, average, and minimum test loads, respectively, for the extra hot wash cycle.

Eh_X, Eh_a, and Eh_n, are reported electrical energy consumption values, in kilowatt-hours per cycle, at maximum, average, and minimum test loads, respectively, for the hot wash cycle.

Ew_X, Ew_a, and Ew_n, are reported electrical energy consumption values, in kilowatt-hours per cycle, at maximum, average, and minimum test loads, respectively, for the warm wash cycle.

Eww_X, Eww_a, and Eww_n, are reported electrical energy consumption values, in kilowatt-hours per cycle, at maximum, average, and minimum test loads, respectively, for the warm wash/warm rinse cycle.

Ec_X, Ec_a, and Ec_n, are reported electrical energy consumption values, in kilowatt-hours per cycle, at maximum, average, and minimum test loads, respectively, for the cold wash cycle.

TUF_m, TUF_h, TUF_w, TUF_{ww}, and TUF_c are as defined in Table 4.1.1 of this Appendix.

4.1.6 *Total weighted per-cycle machine electrical energy consumption*. Calculate the total weighted per-cycle machine electrical energy consumption, ME_T, expressed in kilowatt-hours per cycle and defined as:

$$ME_T = [ME_{max} \times F_{max}] + [ME_{avg} \times F_{avg}] + [ME_{min} \times F_{min}]$$

Where:

ME_{max}, ME_{avg}, and ME_{min} are as defined in section 4.1.5 of this Appendix.

F_{max}, F_{avg}, and F_{min} are as defined in Table 4.1.3 of this Appendix.

4.1.7 *Total per-cycle energy consumption when electrically heated water is used*. Calculate for the energy test cycle the total per-cycle energy consumption, E_{TE}, using electrically heated water, expressed in kilowatt-hours per cycle and defined as:

$$E_{TE} = HE_T + ME_T$$

Where:

ME_T = As defined in section 4.1.6 of this Appendix.

HE_T = As defined in section 4.1.3 of this Appendix.

4.2 *Water consumption of clothes washers*.

4.2.1 *Per-cycle water consumption for extra hot wash*. Calculate the maximum, average, and minimum total water consumption, expressed in gallons per cycle (or liters per cycle), for the extra hot wash cycle and defined as:

$$Qm_{max} = [Hm_X + Cm_X]$$
$$Qm_{avg} = [Hm_a + Cm_a]$$
$$Qm_{min} = [Hm_n + Cm_n]$$

Where:

Hm_X, Cm_X, Hm_a, Cm_a, Hm_n, and Cm_n are defined in section 3.3 of this Appendix.

4.2.2 *Per-cycle water consumption for hot wash*. Calculate the maximum, average, and minimum total water consumption, expressed in gallons per cycle (or liters per cycle), for the hot wash cycle and defined as:

$$Qh_{max} = [Hh_X + Ch_X]$$
$$Qh_{avg} = [Hh_a + Ch_a]$$
$$Qh_{min} = [Hh_n + Ch_n]$$

Where:

Hh_X, Ch_X, Hh_a, Ch_a, Hh_n, and Ch_n are defined in section 3.4 of this Appendix.

4.2.3 *Per-cycle water consumption for warm wash with cold rinse*. Calculate the maximum, average, and minimum total water consumption, expressed in gallons per cycle (or liters per cycle), for the warm wash/cold rinse cycle and defined as:

$$Qw_{max} = [Hw_X + Cw_X]$$
$$Qw_{avg} = [Hw_a + Cw_a]$$
$$Qw_{min} = [Hw_n + Cw_n]$$

Where:

Hw_X, Cw_X, Hw_a, Cw_a, Hw_n, and Cw_n are defined in section 3.5 of this Appendix.

4.2.4 *Per-cycle water consumption for warm wash with warm rinse*. Calculate the maximum, average, and minimum total water consumption, expressed in gallons per cycle (or liters per cycle), for the warm wash/warm rinse cycle and defined as:

$$Qww_{max} = [Hww_X + Cww_X]$$
$$Qww_{avg} = [Hww_a + Cww_a]$$
$$Qww_{min} = [Hww_n + Cww_n]$$

Where:

Hww_X, Cww_X, Hww_a, Cww_a, Hww_n, and Cww_n are defined in section 3.7 of this Appendix.

4.2.5 *Per-cycle water consumption for cold wash*. Calculate the maximum, average, and minimum total water consumption, expressed in gallons per cycle (or liters per cycle), for the cold wash cycle and defined as:

$$Qc_{max} = [Hc_X + Cc_X]$$
$$Qc_{avg} = [Hc_a + Cc_a]$$
$$Qc_{min} = [Hc_n + Cc_n]$$

Where:

Hc_X, Cc_X, Hc_a, Cc_a, Hc_n, and Cc_n are defined in section 3.6 of this Appendix.

4.2.6 *Total weighted per-cycle water consumption for extra hot wash*. Calculate the total weighted per-cycle water consumption for the extra hot wash cycle, Qm_T, expressed in gallons per cycle (or liters per cycle) and defined as:

$$Qm_T = [Qm_{max} \times F_{max}] + [Qm_{avg} \times F_{avg}] + [Qm_{min} \times F_{min}]$$

Where:

Qm_{max}, Qm_{avg}, Qm_{min} are defined in section 4.2.1 of this Appendix.

F_{max}, F_{avg}, F_{min} are defined in Table 4.1.3 of this Appendix.

4.2.7 *Total weighted per-cycle water consumption for hot wash*. Calculate the total weighted per-cycle water consumption for the hot wash cycle, Qh_T, expressed in gallons per cycle (or liters per cycle) and defined as:

$$Qh_T = [Qh_{max} \times F_{max}] + [Qh_{avg} \times F_{avg}] + [Qh_{min} \times F_{min}]$$

Where:

Qh_{max}, Qh_{avg}, Qh_{min} are defined in section 4.2.2 of this Appendix.

F_{max}, F_{avg}, F_{min} are defined in Table 4.1.3 of this Appendix.

4.2.8 *Total weighted per-cycle water consumption for warm wash with cold rinse*. Calculate

the total weighted per-cycle water consumption for the warm wash/cold rinse cycle, Qw_T, expressed in gallons per cycle (or liters per cycle) and defined as:

$Qw_T = [Qw_{max} \times F_{max}] + [Qw_{avg} \times F_{avg}] + [Qw_{min} \times F_{min}]$

Where:

Qw_{max}, Qw_{avg}, Qw_{min} are defined in section 4.2.3 of this Appendix.

F_{max}, F_{avg}, F_{min} are defined in Table 4.1.3 of this Appendix.

4.2.9 *Total weighted per-cycle water consumption for warm wash with warm rinse.* Calculate the total weighted per-cycle water consumption for the warm wash/warm rinse cycle, Qww_T, expressed in gallons per cycle (or liters per cycle) and defined as:

$Qww_T = [Qww_{max} \times F_{max}] + [Qww_{avg} \times F_{avg}] + [Qww_{min} \times F_{min}]$

Where:

Qww_{max}, Qww_{avg}, Qww_{min} are defined in section 4.2.4 of this Appendix.

F_{max}, F_{avg}, F_{min} are defined in Table 4.1.3 of this Appendix.

4.2.10 *Total weighted per-cycle water consumption for cold wash.* Calculate the total weighted per-cycle water consumption for the cold wash cycle, Qc_T, expressed in gallons per cycle (or liters per cycle) and defined as:

$Qc_T = [Qc_{max} \times F_{max}] + [Qc_{avg} \times F_{avg}] + [Qc_{min} \times F_{min}]$

Where:

Qc_{max}, Qc_{avg}, Qc_{min} are defined in section 4.2.5 of this Appendix.

F_{max}, F_{avg}, F_{min} are defined in Table 4.1.3 of this Appendix.

4.2.11 *Total weighted per-cycle water consumption for all wash cycles.* Calculate the total weighted per-cycle water consumption for all wash cycles, Q_T, expressed in gallons per cycle (or liters per cycle) and defined as:

$Q_T = [Qm_T \times TUF_m] + [Qh_T \times TUF_h] + [Qw_T \times TUF_w] + [Qww_T \times TUF_{ww}] + [Qc_T \times TUF_c]$

Where:

Qm_T, Qh_T, Qw_T, Qww_T, and Qc_T are defined in sections 4.2.6 through 4.2.10 of this Appendix.

TUF_m, TUF_h, TUF_w, TUF_{ww}, and TUF_c are defined in Table 4.1.1 of this Appendix.

4.2.12 *Water factor.* Calculate the water factor, WF, expressed in gallons per cycle per cubic foot (or liters per cycle per liter), as:

$WF = Qc_T/C$

Where:

Qc_T = As defined in section 4.2.10 of this Appendix.

C = As defined in section 3.1.5 of this Appendix.

4.2.13 *Integrated water factor.* Calculate the integrated water factor, IWF, expressed in gallons per cycle per cubic foot (or liter per cycle per liter), as:

$IWF = Q_T/C$

Where:

Q_T = As defined in section 4.2.11 of this Appendix.

C = As defined in section 3.1.5 of this Appendix.

4.3 *Per-cycle energy consumption for removal of moisture from test load.* Calculate the per-cycle energy required to remove the remaining moisture of the test load, D_E, expressed in kilowatt-hours per cycle and defined as:

$D_E = [(F_{max} \times \text{Maximum test load weight}) + (F_{avg} \times \text{Average test load weight}) + (F_{min} \times \text{Minimum test load weight})] \times (RMC_{corr} - 4\%) \times (DEF) \times (DUF)$

Where:

F_{max}, F_{avg}, and F_{min} are as defined in Table 4.1.3 of this Appendix.

Maximum, average, and minimum test load weights are as defined in Table 5.1 of this Appendix.

RMC_{corr} = As defined in section 3.8.2.6, 3.8.3.5, or 3.8.4 of this Appendix.

DEF = Nominal energy required for a clothes dryer to remove moisture from clothes = 0.5 kWh/lb (1.1 kWh/kg).

DUF = Dryer usage factor, percentage of washer loads dried in a clothes dryer = 0.91.

4.4 *Per-cycle combined low-power mode energy consumption.* Calculate the per-cycle combined low-power mode energy consumption, E_{TLP}, expressed in kilowatt-hours per cycle and defined as:

$E_{TLP} = [(P_{ia} \times S_{ia}) + (P_o \times S_o)] \times K_p/295.$

Where:

P_{ia} = Washer inactive mode power, in watts, as defined in section 3.9.1 of this Appendix for clothes washers capable of operating in inactive mode; otherwise, $P_{ia} = 0$.

P_o = Washer off mode power, in watts, as defined in section 3.9.2 of this Appendix for clothes washers capable of operating in off mode; otherwise, $P_o = 0$.

S_{ia} = Annual hours in inactive mode as defined as S_{oi} if no off mode is possible, $[S_{oi}/2]$ if both inactive mode and off mode are possible, and 0 if no inactive mode is possible.

S_o = Annual hours in off mode as defined as S_{oi} if no inactive mode is possible, $[S_{oi}/2]$ if both inactive mode and off mode are possible, and 0 if no off mode is possible.

S_{oi} = Combined annual hours for off and inactive mode = 8,465.

K_p = Conversion factor of watt-hours to kilowatt-hours = 0.001.

295 = Representative average number of clothes washer cycles in a year.

4.5 *Modified energy factor.* Calculate the modified energy factor, MEF, expressed in cubic feet per kilowatt-hour per cycle (or liters per kilowatt-hour per cycle) and defined as:

$MEF = C/(E_{TE} + D_E)$

Where:

C = As defined in section 3.1.5 of this Appendix.

E_{TE} = As defined in section 4.1.7 of this Appendix.

D_E = As defined in section 4.3 of this Appendix.

4.6 *Integrated modified energy factor*. Calculate the integrated modified energy factor, IMEF, expressed in cubic feet per kilowatt-hour per cycle (or liters per kilowatt-hour per cycle) and defined as:

$IMEF = C/(E_{TE} + D_E + E_{TLP})$

Where:

C = As defined in section 3.1.5 of this Appendix.

E_{TE} = As defined in section 4.1.7 of this Appendix.

D_E = As defined in section 4.3 of this Appendix.

E_{TLP} = As defined in section 4.4 of this Appendix.

5. Test Loads

TABLE 5.1—TEST LOAD SIZES

Container volume		Minimum load		Maximum load		Average load	
cu. ft. ≥<	liter ≥<	lb	kg	lb	kg	lb	kg
0–0.80	0–22.7	3.00	1.36	3.00	1.36	3.00	1.36
0.80–0.90	22.7–25.5	3.00	1.36	3.50	1.59	3.25	1.47
0.90–1.00	25.5–28.3	3.00	1.36	3.90	1.77	3.45	1.56
1.00–1.10	28.3–31.1	3.00	1.36	4.30	1.95	3.65	1.66
1.10–1.20	31.1–34.0	3.00	1.36	4.70	2.13	3.85	1.75
1.20–1.30	34.0–36.8	3.00	1.36	5.10	2.31	4.05	1.84
1.30–1.40	36.8–39.6	3.00	1.36	5.50	2.49	4.25	1.93
1.40–1.50	39.6–42.5	3.00	1.36	5.90	2.68	4.45	2.02
1.50–1.60	42.5–45.3	3.00	1.36	6.40	2.90	4.70	2.13
1.60–1.70	45.3–48.1	3.00	1.36	6.80	3.08	4.90	2.22
1.70–1.80	48.1–51.0	3.00	1.36	7.20	3.27	5.10	2.31
1.80–1.90	51.0–53.8	3.00	1.36	7.60	3.45	5.30	2.40
1.90–2.00	53.8–56.6	3.00	1.36	8.00	3.63	5.50	2.49
2.00–2.10	56.6–59.5	3.00	1.36	8.40	3.81	5.70	2.59
2.10–2.20	59.5–62.3	3.00	1.36	8.80	3.99	5.90	2.68
2.20–2.30	62.3–65.1	3.00	1.36	9.20	4.17	6.10	2.77
2.30–2.40	65.1–68.0	3.00	1.36	9.60	4.35	6.30	2.86
2.40–2.50	68.0–70.8	3.00	1.36	10.00	4.54	6.50	2.95
2.50–2.60	70.8–73.6	3.00	1.36	10.50	4.76	6.75	3.06
2.60–2.70	73.6–76.5	3.00	1.36	10.90	4.94	6.95	3.15
2.70–2.80	76.5–79.3	3.00	1.36	11.30	5.13	7.15	3.24
2.80–2.90	79.3–82.1	3.00	1.36	11.70	5.31	7.35	3.33
2.90–3.00	82.1–85.0	3.00	1.36	12.10	5.49	7.55	3.42
3.00–3.10	85.0–87.8	3.00	1.36	12.50	5.67	7.75	3.52
3.10–3.20	87.8–90.6	3.00	1.36	12.90	5.85	7.95	3.61
3.20–3.30	90.6–93.4	3.00	1.36	13.30	6.03	8.15	3.70
3.30–3.40	93.4–96.3	3.00	1.36	13.70	6.21	8.35	3.79
3.40–3.50	96.3–99.1	3.00	1.36	14.10	6.40	8.55	3.88
3.50–3.60	99.1–101.9	3.00	1.36	14.60	6.62	8.80	3.99
3.60–3.70	101.9–104.8	3.00	1.36	15.00	6.80	9.00	4.08
3.70–3.80	104.8–107.6	3.00	1.36	15.40	6.99	9.20	4.17
3.80–3.90	107.6–110.4	3.00	1.36	15.80	7.16	9.40	4.26
3.90–4.00	110.4–113.3	3.00	1.36	16.20	7.34	9.60	4.35
4.00–4.10	113.3–116.1	3.00	1.36	16.60	7.53	9.80	4.45
4.10–4.20	116.1–118.9	3.00	1.36	17.00	7.72	10.00	4.54
4.20–4.30	118.9–121.8	3.00	1.36	17.40	7.90	10.20	4.63
4.30–4.40	121.8–124.6	3.00	1.36	17.80	8.09	10.40	4.72
4.40–4.50	124.6–127.4	3.00	1.36	18.20	8.27	10.60	4.82
4.50–4.60	127.4–130.3	3.00	1.36	18.70	8.46	10.85	4.91
4.60–4.70	130.3–133.1	3.00	1.36	19.10	8.65	11.05	5.00
4.70–4.80	133.1–135.9	3.00	1.36	19.50	8.83	11.25	5.10
4.80–4.90	135.9–138.8	3.00	1.36	19.90	9.02	11.45	5.19
4.90–5.00	138.8–141.6	3.00	1.36	20.30	9.20	11.65	5.28
5.00–5.10	141.6–144.4	3.00	1.36	20.70	9.39	11.85	5.38
5.10–5.20	144.4–147.2	3.00	1.36	21.10	9.58	12.05	5.47
5.20–5.30	147.2–150.1	3.00	1.36	21.50	9.76	12.25	5.56
5.30–5.40	150.1–152.9	3.00	1.36	21.90	9.95	12.45	5.65
5.40–5.50	152.9–155.7	3.00	1.36	22.30	10.13	12.65	5.75
5.50–5.60	155.7–158.6	3.00	1.36	22.80	10.32	12.90	5.84
5.60–5.70	158.6–161.4	3.00	1.36	23.20	10.51	13.10	5.93
5.70–5.80	161.4–164.2	3.00	1.36	23.60	10.69	13.30	6.03
5.80–5.90	164.2–167.1	3.00	1.36	24.00	10.88	13.50	6.12

TABLE 5.1—TEST LOAD SIZES—Continued

Container volume		Minimum load		Maximum load		Average load	
cu. ft. ≥<	liter ≥<	lb	kg	lb	kg	lb	kg
5.90–6.00	167.1–169.9	3.00	1.36	24.40	11.06	13.70	6.21

Notes: (1) All test load weights are bone dry weights.
(2) Allowable tolerance on the test load weights are ±0.10 lbs (0.05 kg).

6. WAIVERS AND FIELD TESTING

6.1 *Waivers and Field Testing for Nonconventional Clothes Washers.* Manufacturers of nonconventional clothes washers, such as clothes washers with adaptive control systems, must submit a petition for waiver pursuant to 10 CFR 430.27 to establish an acceptable test procedure for that clothes washer if the washer cannot be tested pursuant to the DOE test procedure or the DOE test procedure yields results that are so unrepresentative of the clothes washer's true energy consumption characteristics as to provide materially inaccurate comparative data. In such cases, field testing may be appropriate for establishing an acceptable test procedure. The following are guidelines for field testing which may be used by manufacturers in support of petitions for waiver. These guidelines are not mandatory and the Department may determine that they do not apply to a particular model. Depending upon a manufacturer's approach for conducting field testing, additional data may be required. Manufacturers are encouraged to communicate with the Department prior to the commencement of field tests which may be used to support a petition for waiver. Section 6.3 of this Appendix provides an example of field testing for a clothes washer with an adaptive water fill control system. Other features, such as the use of various spin speed selections, could be the subject of field tests.

6.2 *Nonconventional Wash System Energy Consumption Test.* The field test may consist of a minimum of 10 of the nonconventional clothes washers (''test clothes washers'') and 10 clothes washers already being distributed in commerce (''base clothes washers''). The tests should include a minimum of 50 energy test cycles per clothes washer. The test clothes washers and base clothes washers should be identical in construction except for the controls or systems being tested. Equal numbers of both the test clothes washer and the base clothes washer should be tested simultaneously in comparable settings to minimize seasonal or consumer laundering conditions or variations. The clothes washers should be monitored in such a way as to accurately record the average total energy and water consumption per cycle, including water heating energy when electrically heated water is used, and the energy required to remove the remaining moisture of the test load. Standby and off mode energy consumption should be measured according to section 4.4 of this test procedure. The field test results should be used to determine the best method to correlate the rating of the test clothes washer to the rating of the base clothes washer.

6.3 *Adaptive water fill control system field test.* (1) Section 3.2.3.1 of this Appendix defines the test method for measuring energy consumption for clothes washers which incorporate both adaptive and alternate manual water fill control systems. Energy consumption calculated by the method defined in section 3.2.3.1 of this Appendix assumes the adaptive cycle will be used 50 percent of the time. This section can be used to develop field test data in support of a petition for waiver when it is believed that the adaptive cycle will be used more than 50 percent of the time. The field test sample size should be a minimum of 10 test clothes washers. The test clothes washers should be representative of the design, construction, and control system that will be placed in commerce. The duration of field testing in the user's house should be a minimum of 50 energy test cycles, for each unit. No special instructions as to cycle selection or product usage should be given to the field test participants, other than inclusion of the product literature pack which would be shipped with all units, and instructions regarding filling out data collection forms, use of data collection equipment, or basic procedural methods. Prior to the test clothes washers being installed in the field test locations, baseline data should be developed for all field test units by conducting laboratory tests as defined by section 1 through section 5 of this Appendix to determine the energy consumption, water consumption, and remaining moisture content values. The following data should be measured and recorded for each wash load during the test period: Wash cycle selected, the mode of the clothes washer (adaptive or manual), clothes load dry weight (measured after the clothes washer and clothes dryer cycles are completed) in pounds, and type of articles in the clothes load (*e.g.*, cottons, linens, permanent press). The wash loads used in calculating the in-home percentage split between adaptive and manual cycle usage

should be only those wash loads which conform to the definition of the energy test cycle.

Calculate:

T=The total number of energy test cycles run during the field test.

T_a = The total number of adaptive control energy test cycles.

T_m = The total number of manual control energy test cycles.

The percentage weighting factors:

$P_a = (T_a/T) \times 100\%$ (the percentage weighting for adaptive control selection)

$P_m = (T_m/T) \times 100\%$ (the percentage weighting for manual control selection)

(2) Energy consumption (HE_T, ME_T, and D_E) and water consumption (Q_T), values calculated in section 4 of this Appendix for the manual and adaptive modes, should be combined using P_a and P_m as the weighting factors.

[77 FR 13939, Mar. 7, 2012]

APPENDIXES K–L TO SUBPART B OF PART 430 [RESERVED]

APPENDIX M TO SUBPART B OF PART 430—UNIFORM TEST METHOD FOR MEASURING THE ENERGY CONSUMPTION OF CENTRAL AIR CONDITIONERS AND HEAT PUMPS

NOTE: The procedures and calculations that refer to off mode energy consumption (*i.e.*, sections 3.13 and 4.2.8 of this appendix M) need not be performed to determine compliance with energy conservation standards for central air conditioners and heat pumps at this time. However, any representation related to standby mode and off mode energy consumption of these products made after corresponding revisions to the central air conditioners and heat pumps test procedure must be based upon results generated under this test procedure, consistent with the requirements of 42 U.S.C. 6293(c)(2). For residential central air conditioners and heat pumps manufactured on or after January 1, 2015, compliance with the applicable provisions of this test procedure is required in order to determine compliance with energy conservation standards.

1. DEFINITIONS

2. TESTING CONDITIONS

2.1 Test room requirements.
2.2 Test unit installation requirements.
2.2.1 Defrost control settings.
2.2.2 Special requirements for units having a multiple-speed outdoor fan.
2.2.3 Special requirements for multi-split air conditioners and heat pumps, and systems composed of multiple mini-split units (outdoor units located side-by-side) that would normally operate using two or more indoor thermostats.
2.2.4 Wet-bulb temperature requirements for the air entering the indoor and outdoor coils.
2.2.4.1 Cooling mode tests.
2.2.4.2 Heating mode tests.
2.2.5 Additional refrigerant charging requirements.
2.3 Indoor air volume rates.
2.3.1 Cooling tests.
2.3.2 Heating tests.
2.4 Indoor coil inlet and outlet duct connections.
2.4.1 Outlet plenum for the indoor unit.
2.4.2 Inlet plenum for the indoor unit.
2.5 Indoor coil air property measurements and air damper box applications.
2.5.1 Test set-up on the inlet side of the indoor coil: For cases where the inlet damper box is installed.
2.5.1.1 If the section 2.4.2 inlet plenum is installed.
2.5.1.2 If the section 2.4.2 inlet plenum is not installed.
2.5.2 Test set-up on the inlet side of the indoor unit: For cases where no inlet damper box is installed.
2.5.3 Indoor coil static pressure difference measurement.
2.5.4 Test set-up on the outlet side of the indoor coil.
2.5.4.1 Outlet air damper box placement and requirements.
2.5.4.2 Procedures to minimize temperature maldistribution.
2.5.5 Dry bulb temperature measurement.
2.5.6 Water vapor content measurement.
2.5.7 Air damper box performance requirements.
2.6 Airflow measuring apparatus.
2.7 Electrical voltage supply.
2.8 Electrical power and energy measurements.
2.9 Time measurements.
2.10 Test apparatus for the secondary space conditioning capacity measurement.
2.10.1 Outdoor Air Enthalpy Method.
2.10.2 Compressor Calibration Method.
2.10.3 Refrigerant Enthalpy Method.
2.11 Measurement of test room ambient conditions.
2.12 Measurement of indoor fan speed.
2.13 Measurement of barometric pressure.

3. TESTING PROCEDURES

3.1 General Requirements.
3.1.1 Primary and secondary test methods.
3.1.2 Manufacturer-provided equipment overrides.
3.1.3 Airflow through the outdoor coil.
3.1.4 Airflow through the indoor coil.
3.1.4.1 Cooling Certified Air Volume Rate.
3.1.4.1.1 Cooling Certified Air Volume Rate for Ducted Units.
3.1.4.1.2 Cooling Certified Air Volume Rate for Non-ducted Units.

3.1.4.2 Cooling Minimum Air Volume Rate.

3.1.4.3 Cooling Intermediate Air Volume Rate.

3.1.4.4 Heating Certified Air Volume Rate.

3.1.4.4.1 Ducted heat pumps where the Heating and Cooling Certified Air Volume Rates are the same.

3.1.4.4.2 Ducted heat pumps where the Heating and Cooling Certified Air Volume Rates are different due to indoor fan operation.

3.1.4.4.3 Ducted heating-only heat pumps.

3.1.4.4.4 Non-ducted heat pumps, including non-ducted heating-only heat pumps.

3.1.4.5 Heating Minimum Air Volume Rate.

3.1.4.6 Heating Intermediate Air Volume Rate.

3.1.4.7 Heating Nominal Air Volume Rate.

3.1.5 Indoor test room requirement when the air surrounding the indoor unit is not supplied from the same source as the air entering the indoor unit.

3.1.6 Air volume rate calculations.

3.1.7 Test sequence.

3.1.8 Requirement for the air temperature distribution leaving the indoor coil.

3.1.9 Control of auxiliary resistive heating elements.

3.2 Cooling mode tests for different types of air conditioners and heat pumps.

3.2.1 Tests for a unit having a single-speed compressor that is tested with a fixed-speed indoor fan installed, with a constant-air-volume-rate indoor fan installed, or with no indoor fan installed.

3.2.2 Tests for a unit having a single-speed compressor and a variable-speed variable-air-volume-rate indoor fan installed.

3.2.2.1 Indoor fan capacity modulation that correlates with the outdoor dry bulb temperature.

3.2.2.2 Indoor fan capacity modulation based on adjusting the sensible to total (S/T) cooling capacity ratio.

3.2.3 Tests for a unit having a two-capacity compressor.

3.2.4 Tests for a unit having a variable-speed compressor.

3.3 Test procedures for steady-state wet coil cooling mode tests (the A, A_2, A_1, B, B_2, B_1, E_V, and F_1 Tests).

3.4 Test procedures for the optional steady-state dry coil cooling mode tests (the C, C_1, and G_1 Tests).

3.5 Test procedures for the optional cyclic dry coil cooling mode tests (the D, D_1, and I_1 Tests).

3.5.1 Procedures when testing ducted systems.

3.5.2 Procedures when testing non-ducted systems.

3.5.3 Cooling mode cyclic degradation coefficient calculation.

3.6 Heating mode tests for different types of heat pumps, including heating-only heat pumps.

3.6.1 Tests for a heat pump having a single-speed compressor that is tested with a fixed speed indoor fan installed, with a constant-air-volume-rate indoor fan installed, or with no indoor fan installed.

3.6.2 Tests for a heat pump having a single-speed compressor and a variable-speed, variable-air-volume-rate indoor fan: capacity modulation correlates with outdoor dry bulb temperature.

3.6.3 Tests for a heat pump having a two-capacity compressor (see Definition 1.45), including two-capacity, northern heat pumps (see Definition 1.46).

3.6.4 Tests for a heat pump having a variable-speed compressor.

3.6.5 Additional test for a heat pump having a heat comfort controller.

3.7 Test procedures for steady-state Maximum Temperature and High Temperature heating mode tests (the $H0_1$, H1, $H1_2$, $H1_1$, and $H1_N$ Tests).

3.8 Test procedures for the optional cyclic heating mode tests (the $H0C_1$, H1C, and $H1C_1$ Tests).

3.8.1 Heating mode cyclic degradation coefficient calculation.

3.9 Test procedures for Frost Accumulation heating mode tests (the H_2, $H2_2$, $H2_V$, and $H2_1$ Tests).

3.9.1 Average space heating capacity and electrical power calculations.

3.9.2 Demand defrost credit.

3.10 Test procedures for steady-state Low Temperature heating mode tests (the H_3, $H3_2$, and $H3_1$ Tests).

3.11 Additional requirements for the secondary test methods.

3.11.1 If using the Outdoor Air Enthalpy Method as the secondary test method.

3.11.1.1 If a preliminary test precedes the official test

3.11.1.2 If a preliminary test does not precede the official test.

3.11.1.3 Official test.

3.11.2 If using the Compressor Calibration Method as the secondary test method.

3.11.3 If using the Refrigerant Enthalpy Method as the secondary test method.

3.12 Rounding of space conditioning capacities for reporting purposes.

4. CALCULATIONS OF SEASONAL PERFORMANCE DESCRIPTORS

4.1 Seasonal Energy Efficiency Ratio (SEER) Calculations.

4.1.1 SEER calculations for an air conditioner or heat pump having a single-speed compressor that was tested with a fixed-speed indoor fan installed, a constant-air-volume-rate indoor fan installed, or with no indoor fan installed.

4.1.2 SEER calculations for an air conditioner or heat pump having a single-speed compressor and a variable-speed variable-air-volume-rate indoor fan.

4.1.2.1 Units covered by section 3.2.2.1 where indoor fan capacity modulation correlates with the outdoor dry bulb temperature.

4.1.2.2 Units covered by section 3.2.2.2 where indoor fan capacity modulation is used to adjust the sensible to total cooling capacity ratio.

4.1.3 SEER calculations for an air conditioner or heat pump having a two-capacity compressor.

4.1.3.1 Steady-state space cooling capacity at low compressor capacity is greater than or equal to the building cooling load at temperature T_j, $\dot{Q}_c^{k=1}(T_j) \geq BL(T_j)$.

4.1.3.2 Unit alternates between high (k=2) and low (k=1) compressor capacity to satisfy the building cooling load at temperature T_j, $\dot{Q}_c^{k=1}(T_j) < BL(T_j) < \dot{Q}_c^{k=2}(T_j)$.

4.1.3.3 Unit only operates at high (k=2) compressor capacity at temperature T_j and its capacity is greater than the building cooling load, $BL(T_j) < \dot{Q}_c^{k=2}(T_j)$.

4.1.3.4 Unit must operate continuously at high (k=2) compressor capacity at temperature T_j, $BL(T_j) \geq Q_c^{k=2}(T_j)$.

4.1.4 SEER calculations for an air conditioner or heat pump having a variable-speed compressor.

4.1.4.1 Steady-state space cooling capacity when operating at minimum compressor speed is greater than or equal to the building cooling load at temperature T_j, $\dot{Q}_c^{k=1}(T_j) \geq BL(T_j)$.

4.1.4.2 Unit operates at an intermediate compressor speed (k=i) in order to match the building cooling load at temperature T_j, $\dot{Q}_c^{k=1}(T_j) < BL(T_j) < \dot{Q}_c^{k=2}(T_j)$.

4.1.4.3 Unit must operate continuously at maximum (k=2) compressor speed at temperature T_j, $BL(T_j) \geq \dot{Q}_c^{k=2}(T_j)$.

4.2 Heating Seasonal Performance Factor (HSPF) Calculations.

4.2.1 Additional steps for calculating the HSPF of a heat pump having a single-speed compressor that was tested with a fixed-speed indoor fan installed, a constant-air-volume-rate indoor fan installed, or with no indoor fan installed.

4.2.2 Additional steps for calculating the HSPF of a heat pump having a single-speed compressor and a variable-speed, variable-air-volume-rate indoor fan.

4.2.3 Additional steps for calculating the HSPF of a heat pump having a two-capacity compressor.

4.2.3.1 Steady-state space heating capacity when operating at low compressor capacity is greater than or equal to the building heating load at temperature T_j, $\dot{Q}_h^{k=1}(T_j) \geq BL(T_j)$.

4.2.3.2 Heat pump alternates between high (k=2) and low (k=1) compressor capacity to satisfy the building heating load at a temperature T_j, $\dot{Q}_h^{k=1}(T_j)$ BL $(T_j) < \dot{Q}_h^{k=2}(T_j)$.

4.2.3.3 Heat pump only operates at high (k=2) compressor capacity at temperature T_j and its capacity is greater than the building heating load, $BL(T_j) < \dot{Q}_h^{k=2}(T_j)$.

4.2.3.4 Heat pump must operate continuously at high (k=2) compressor capacity at temperature T_j, $BL(T_j) \geq \dot{Q}_h^{k=2}(T_j)$.

4.2.4 Additional steps for calculating the HSPF of a heat pump having a variable-speed compressor.

4.2.4.1 Steady-state space heating capacity when operating at minimum compressor speed is greater than or equal to the building heating load at temperature T_j, $\dot{Q}_h^{k=1}(T_j) \geq BL(T_j)$.

4.2.4.2 Heat pump operates at an intermediate compressor speed (k=i) in order to match the building heating load at a temperature T_j, $\dot{Q}_h^{k=1}(T_j) < BL(T_j) < \dot{Q}_h^{k=2}(T_j)$.

4.2.4.3 Heat pump must operate continuously at maximum (k=2) compressor speed at temperature T_j, $BL(T_j) \geq \dot{Q}_h^{k=2}(T_j)$.

4.2.5 Heat pumps having a heat comfort controller.

4.2.5.1 Heat pump having a heat comfort controller: Additional steps for calculating the HSPF of a heat pump having a single-speed compressor that was tested with a fixed-speed indoor fan installed, a constant-air-volume-rate indoor fan installed, or with no indoor fan installed.

4.2.5.2 Heat pump having a heat comfort controller: Additional steps for calculating the HSPF of a heat pump having a single-speed compressor and a variable-speed, variable-air-volume-rate indoor fan.

4.2.5.3 Heat pumps having a heat comfort controller: Additional steps for calculating the HSPF of a heat pump having a two-capacity compressor.

4.2.5.4 Heat pumps having a heat comfort controller: Additional steps for calculating the HSPF of a heat pump having a variable-speed compressor. [Reserved]

4.3 Calculations of the Actual and Representative Regional Annual Performance Factors for Heat Pumps.

4.3.1 Calculation of actual regional annual performance factors (APF_A) for a particular location and for each standardized design heating requirement.

4.3.2 Calculation of representative regional annual performance factors (APF_R) for each generalized climatic region and for each standardized design heating requirement.

4.4 Rounding of SEER, HSPF, and APF for reporting purposes.

1. Definitions

1.1 Annual performance factor means the total heating and cooling done by a heat pump in a particular region in one year divided by the total electric energy used in one year. Paragraph (m)(3)(iii) of §430.23 of the Code of Federal Regulations states the calculation requirements for this rating descriptor.

1.2 ARI means Air-Conditioning and Refrigeration Institute.

1.3 ARI Standard 210/240–2006 means the test standard ''Unitary Air-Conditioning and Air-Source Heat Pump Equipment'' published in 2006 by ARI.

1.4 ASHRAE means the American Society of Heating, Refrigerating and Air-Conditioning Engineers, Inc.

1.5 ASHRAE Standard 23–2005 means the test standard ''Methods of Testing for Rating Positive Displacement Refrigerant Compressors and Condensing Units'' published in 2005 by ASHRAE.

1.6 ASHRAE Standard 37–2005 means the test standard ''Methods of Testing for Rating Unitary Air-Conditioning and Heat Pump Equipment'' published in 2005 by ASHRAE.

1.7 ASHRAE Standard 41.1–86 (RA 01) means the test standard ''Standard Method for Temperature Measurement'' published in 1986 and reaffirmed in 2001 by ASHRAE.

1.8 ASHRAE Standard 41.2–87 (RA 92) means the test standard ''Standard Methods for Laboratory Airflow Measurement'' published in 1987 and reaffirmed in 1992 by ASHRAE.

1.9 ASHRAE Standard 41.6–94 (RA 01) means the test standard ''Method for Measurement of Moist Air Properties'' published in 1994 and reaffirmed in 2001 by ASHRAE.

1.10 ASHRAE Standard 41.9–00 means the test standard ''Calorimeter Test Methods for Mass Flow Measurements of Volatile Refrigerants'' published in 2000 by ASHRAE.

1.11 ASHRAE Standard 51–99/AMCA Standard 210–1999 means the test standard ''Laboratory Methods of Testing Fans for Aerodynamic Performance Rating'' published in 1999 by ASHRAE and the Air Movement and Control Association International, Inc.

1.12 ASHRAE Standard 116–95 RA(05) means the test standard ''Methods of Testing for Rating for Seasonal Efficiency of Unitary Air Conditioners and Heat Pumps'' published in 1995 and reaffirmed in 2005 by ASHRAE.

1.13 CFR means Code of Federal Regulations.

1.14 Constant-air-volume-rate indoor fan means a fan that varies its operating speed to provide a fixed air-volume-rate from a ducted system.

1.15 Continuously recorded, when referring to a dry bulb measurement, means that the specified temperature must be sampled at regular intervals that are equal to or less than the maximum intervals specified in section 4.3 part ''a'' of ASHRAE Standard 41.1–86 (RA 01). If such dry bulb temperatures are used only for test room control, it means that one samples at regular intervals equal to or less than the maximum intervals specified in section 4.3 part ''b'' of the same ASHRAE Standard. Regarding wet bulb temperature, dew point temperature, or relative humidity measurements, continuously recorded means that the measurements must be made at regular intervals that are equal to or less than 1 minute.

1.16 Cooling load factor (CLF) means the ratio having as its numerator the total cooling delivered during a cyclic operating interval consisting of one ON period and one OFF period. The denominator is the total cooling that would be delivered, given the same ambient conditions, had the unit operated continuously at its steady-state space cooling capacity for the same total time (ON + OFF) interval.

1.17 Coefficient of Performance (COP) means the ratio of the average rate of space heating delivered to the average rate of electrical energy consumed by the heat pump. These rate quantities must be determined from a single test or, if derived via interpolation, must be tied to a single set of operating conditions. COP is a dimensionless quantity. When determined for a ducted unit tested without an indoor fan installed, COP must include the section 3.7, 3.8, and 3.9.1 default values for the heat output and power input of a fan motor.

1.18 Cyclic Test means a test where the unit's compressor is cycled on and off for specific time intervals. A cyclic test provides half the information needed to calculate a degradation coefficient.

1.19 Damper box means a short section of duct having an air damper that meets the performance requirements of section 2.5.7.

1.20 Degradation coefficient (C_D) means a parameter used in calculating the part load factor. The degradation coefficient for cooling is denoted by C_D^c. The degradation coefficient for heating is denoted by C_D^h.

1.21 Demand-defrost control system means a system that defrosts the heat pump outdoor coil only when measuring a predetermined degradation of performance. The heat pump's controls monitor one or more parameters that always vary with the amount of frost accumulated on the outdoor coil (*e.g.*, coil to air differential temperature, coil differential air pressure, outdoor fan power or current, optical sensors, etc.) at least once for every ten minutes of compressor ON-time when space heating. One acceptable alternative to the criterion given in the prior sentence is a feedback system that measures the length of the defrost period and adjusts defrost frequency accordingly.[1] In all cases, when the frost parameter(s) reaches a predetermined value, the system initiates a defrost. In a demand-defrost control system, defrosts are terminated based on monitoring a parameter(s) that indicates that frost has been eliminated from the coil.

A demand-defrost control system, which otherwise meets the above requirements, may allow time-initiated defrosts if, and

[1] Systems that vary defrost intervals according to outdoor dry-bulb temperature are not demand defrost systems.

only if, such defrosts occur after 6 hours of compressor operating time.

1.22 Design heating requirement (DHR) predicts the space heating load of a residence when subjected to outdoor design conditions. Estimates for the minimum and maximum DHR are provided for six generalized U.S. climatic regions in section 4.2.

1.23 Dry-coil tests are cooling mode tests where the wet-bulb temperature of the air supplied to the indoor coil is maintained low enough that no condensate forms on this coil.

1.24 Ducted system means an air conditioner or heat pump that is designed to be permanently installed equipment and delivers conditioned air to the indoor space through a duct(s). The air conditioner or heat pump may be either a split system or a single-packaged unit.

1.25 Energy efficiency ratio (EER) means the ratio of the average rate of space cooling delivered to the average rate of electrical energy consumed by the air conditioner or heat pump. These rate quantities must be determined from a single test or, if derived via interpolation, must be tied to a single set of operating conditions. EER is expressed in units of

$$\frac{\text{Btu/h}}{\text{W}}.$$

When determined for a ducted unit tested without an indoor fan installed, EER must include the section 3.3 and 3.5.1 default values for the heat output and power input of a fan motor.

1.26 Heating load factor (HLF) means the ratio having as its numerator the total heating delivered during a cyclic operating interval consisting of one ON period and one OFF period. The denominator is the total heating that would be delivered, given the same ambient conditions, if the unit operated continuously at its steady-state space heating capacity for the same total time (ON plus OFF) interval.

1.27 Heating seasonal performance factor (HSPF) means the total space heating required during the space heating season, expressed in Btu's, divided by the total electrical energy consumed by the heat pump system during the same season, expressed in watt-hours. The HSPF used to evaluate compliance with the Energy Conservation Standards (see 10 CFR 430.32(c), subpart C) is based on Region IV, the minimum standardized design heating requirement, and the sampling plan stated in 10 CFR 430.24(m), subpart B.

1.28 Heat pump having a heat comfort controller means equipment that regulates the operation of the electric resistance elements to assure that the air temperature leaving the indoor section does not fall below a specified temperature. This specified temperature is usually field adjustable. Heat pumps that actively regulate the rate of electric resistance heating when operating below the balance point (as the result of a second stage call from the thermostat) but do not operate to maintain a minimum delivery temperature are not considered as having a heat comfort controller.

1.29 Mini-split air conditioners and heat pumps means systems that have a single outdoor section and one or more indoor sections. The indoor sections cycle on and off in unison in response to a single indoor thermostat.

1.30 Multiple-split air conditioners and heat pumps means systems that have two or more indoor sections. The indoor sections operate independently and can be used to condition multiple zones in response to multiple indoor thermostats.

1.31 Non-ducted system means an air conditioner or heat pump that is designed to be permanently installed equipment and directly heats or cools air within the conditioned space using one or more indoor coils that are mounted on room walls and/or ceilings. The unit may be of a modular design that allows for combining multiple outdoor coils and compressors to create one overall system. Non-ducted systems covered by this test procedure are all split systems.

1.32 Part-load factor (PLF) means the ratio of the cyclic energy efficiency ratio (coefficient of performance) to the steady-state energy efficiency ratio (coefficient of performance). Evaluate both energy efficiency ratios (coefficients of performance) based on operation at the same ambient conditions.

1.33 Seasonal energy efficiency ratio (SEER) means the total heat removed from the conditioned space during the annual cooling season, expressed in Btu's, divided by the total electrical energy consumed by the air conditioner or heat pump during the same season, expressed in watt-hours. The SEER calculation in section 4.1 of this appendix and the sampling plan stated in 10 CFR subpart B, 430.24(m) are used to evaluate compliance with the Energy Conservation Standards. (See 10 CFR 430.32(c), subpart C.)

1.34 Single-packaged unit means any central air conditioner or heat pump that has all major assemblies enclosed in one cabinet.

1.35 Small-duct, high-velocity system means a system that contains a blower and indoor coil combination that is designed for, and produces, at least 1.2 inches (of water) of external static pressure when operated at the full-loadair volume rate of 220–350 cfm per rated ton of cooling. When applied in the field, small-duct products use high-velocity room outlets (*i.e.*, generally greater than 1000 fpm) having less than 6.0 square inches of free area.

1.36 Split system means any air conditioner or heat pump that has one or more of

the major assemblies separated from the others.

1.37 Standard Air means dry air having a mass density of 0.075 lb/ft^3.

1.38 Steady-state test means a test where the test conditions are regulated to remain as constant as possible while the unit operates continuously in the same mode.

1.39 Temperature bin means the 5 °F increments that are used to partition the outdoor dry-bulb temperature ranges of the cooling (≥65 °F) and heating (<65 °F) seasons.

1.40 Test condition tolerance means the maximum permissible difference between the average value of the measured test parameter and the specified test condition.

1.41 Test operating tolerance means the maximum permissible range that a measurement may vary over the specified test interval. The difference between the maximum and minimum sampled values must be less than or equal to the specified test operating tolerance.

1.42 Time adaptive defrost control system is a demand-defrost control system (see definition 1.21) that measures the length of the prior defrost period(s) and uses that information to automatically determine when to initiate the next defrost cycle.

1.43 Time-temperature defrost control systems initiate or evaluate initiating a defrost cycle only when a predetermined cumulative compressor ON-time is obtained. This predetermined ON-time is generally a fixed value (*e.g.*, 30, 45, 90 minutes) although it may vary based on the measured outdoor dry-bulb temperature. The ON-time counter accumulates if controller measurements (*e.g.*, outdoor temperature, evaporator temperature) indicate that frost formation conditions are present, and it is reset/remains at zero at all other times. In one application of the control scheme, a defrost is initiated whenever the counter time equals the predetermined ON-time. The counter is reset when the defrost cycle is completed.

In a second application of the control scheme, one or more parameters are measured (*e.g.*, air and/or refrigerant temperatures) at the predetermined, cumulative, compressor ON-time. A defrost is initiated only if the measured parameter(s) falls within a predetermined range. The ON-time counter is reset regardless of whether a defrost is initiated. If systems of this second type use cumulative ON-time intervals of 10 minutes or less, then the heat pump may qualify as having a demand defrost control system (see definition 1.21).

1.44 Triple-split system means an air conditioner or heat pump that is composed of three separate components: An outdoor fan coil section, an indoor fan coil section, and an indoor compressor section.

1.45 Two-capacity (or two-stage) compressor means an air conditioner or heat pump that has one of the following:

(1) A two-speed compressor,

(2) Two compressors where only one compressor ever operates at a time,

(3) Two compressors where one compressor (Compressor #1) operates at low loads and both compressors (Compressors #1 and #2) operate at high loads but Compressor #2 never operates alone, or

(4) A compressor that is capable of cylinder or scroll unloading.

For such systems, low capacity means:

(1) Operating at low compressor speed,

(2) Operating the lower capacity compressor,

(3) Operating Compressor #1, or

(4) Operating with the compressor unloaded (*e.g.*, operating one piston of a two-piston reciprocating compressor, using a fixed fractional volume of the full scroll, etc.).

For such systems, high capacity means:

(1) Operating at high compressor speed,

(2) Operating the higher capacity compressor,

(3) Operating Compressors #1 and #2, or

(4) Operating with the compressor loaded (*e.g.*, operating both pistons of a two-piston reciprocating compressor, using the full volume of the scroll).

1.46 Two-capacity, northern heat pump means a heat pump that has a factory or field-selectable lock-out feature to prevent space cooling at high-capacity. Two-capacity heat pumps having this feature will typically have two sets of ratings, one with the feature disabled and one with the feature enabled. The indoor coil model number should reflect whether the ratings pertain to the lockout enabled option via the inclusion of an extra identifier, such as ''+LO.'' When testing as a two-capacity, northern heat pump, the lockout feature must remain enabled for all tests.

1.47 Wet-coil test means a test conducted at test conditions that typically cause water vapor to condense on the test unit evaporator coil.

2. Testing Conditions

This test procedure covers split-type and single-packaged ducted units and split-type non-ducted units. Except for units having a variable-speed compressor, ducted units tested without an indoor fan installed are covered.

a. Only a subset of the sections listed in this test procedure apply when testing and rating a particular unit. Tables 1–A through 1–C show which sections of the test procedure apply to each type of equipment. In each table, look at all four of the Roman numeral categories to see what test sections apply to the equipment being tested.

1. The first category, Rows I–1 through I–4 of the Tables, pertains to the compressor and indoor fan features of the equipment. After identifying the correct ''I'' row, find the

table cells in the same row that list the type of equipment being tested: Air conditioner (AC), heat pump (HP), or heating-only heat pump (HH). Use the test section(s) listed above each noted table cell for testing and rating the unit.

2. The second category, Rows II–1 and II–2, pertains to the presence or absence of ducts. Row II–1 shows the test procedure sections that apply to ducted systems, and Row II–2 shows those that apply to non-ducted systems.

3. The third category is for special features that may be present in the equipment. When testing units that have one or more of the three (special) equipment features described by the Table legend for Category III, use Row III to find test sections that apply.

4. The fourth category is for the secondary test method to be used. If the secondary method for determining the unit's cooling and/or heating capacity is known, use Row IV to find the appropriate test sections. Otherwise, include all of the test sections referenced by Row IV cell entries—*i.e.*, sections 2.10 to 2.10.3 and 3.11 to 3.11.3—among those sections consulted for testing and rating information.

b. Obtain a complete listing of all pertinent test sections by recording those sections identified from the four categories above.

c. The user should note that, for many sections, only part of a section applies to the unit being tested. In a few cases, the entire section may not apply. For example, sections 3.4 to 3.5.3 (which describe optional dry coil tests), are not relevant if the allowed default value for the cooling mode cyclic degradation coefficient is used rather than determining it by testing.

Example for Using Tables 1–A to 1–C

Equipment Description: A ducted air conditioner having a single-speed compressor, a fixed-speed indoor fan, and a multi-speed outdoor fan.

Secondary Test Method: Refrigerant Enthalpy Method

Step 1. Determine which of four listed Row ''I'' options applies ==>Row I–2

Table 1–A: ''AC'' in Row I–2 is found in the columns for sections 1.1 to 1.47, 2.1 to 2.2, 2.2.4 to 2.2.4.1, 2.2.5, 2.3 to 2.3.1, 2.4 to 2.4.1, 2.5, 2.5.2 to 2.10, and 2.11 to 2.13.

Table 1–B: ''AC'' is listed in Row I–2 for sections 3 to 3.1.4, 3.1.5 to 3.1.8, 3.2.1, 3.3 to 3.5, 3.5.3, 3.11 and 3.12.

Table 1–C: ''AC'' is listed in Row I–2 for sections 4.1.1 and 4.4.

Step 2. Equipment is ducted ==>Row II–1

Table 1–A: ''AC'' is listed in Row II–1 for sections 2.4.2 and 2.5.1 to 2.5.1.2.

Table 1–B: ''AC'' is listed in Row II–1 for sections 3.1.4.1 to 3.1.4.1.1 and 3.5.1.

Table 1–C: no ''AC'' listings in Row II–1.

Step 3. Equipment Special Features include multi-speed outdoor fan ==>Row III, M

Table 1–A: ''M'' is listed in Row III for section 2.2.2

Tables 1–B and 1–C: no ''M'' listings in Row III.

Step 4. Secondary Test Method is Refrigerant Enthalpy Method ==>Row IV, R

Table 1–A: ''R'' is listed in Row IV for section 2.10.3

Table 1–B: ''R'' is listed in Row IV for section 3.11.3

Table 1–C: no ''R'' listings in Row IV.

Step 5. Cumulative listing of applicable test procedure sections 1.1 to 1.47, 2.1 to 2.2, 2.2.2, 2.2.4 to 2.4.1, 2.2.5, 2.3 to 2.3.1, 2.4 to 2.4.1, 2.4.2, 2.5, 2.5.1 to 2.5.1.2, 2.5.2 to 2.10, 2.10.3, 2.11 to 2.13, 3. to 3.1.4, 3.1.4.1 to 3.1.4.1.1, 3.1.5 to 3.1.8, 3.2.1, 3.3 to 3.5, 3.5.1, 3.5.3, 3.11, 3.11.3, 3.12, 4.1.1, and 4.4.

Table 1A. Selection of Test Procedure Sections: Section 1 (Definitions) and Section 2 (Testing Conditions)

Key Equipment Features and Secondary Test Method / Sections From the Test Procedure	1.1 to 1.47	2.1 to 2.2	2.2.1	2.2.2	2.2.3	2.2.4 to 2.2.4.1	2.2.4.2	2.2.5	2.3 to 2.3.1	2.3.2	2.4 to 2.4.1	2.4.2	2.5	2.5.1 to 2.5.1.2	2.5.2 to 2.10	2.10.1	2.10.2	2.10.3	2.11 to 2.13
I-1. Single-speed Compressor; Variable-Speed Variable Air Volume Indoor Fan	AC HP HH	AC HP HH	HP HH			AC HP	HP HH	AC HP HH	AC HP	HP HH	AC HP HH		AC HP HH		AC HP HH				AC HP HH
I-2. Single-speed Compressor Except as Covered by "I-1"	AC HP HH	AC HP HH	HP HH			AC HP	HP HH	AC HP HH	AC HP	HP HH	AC HP HH		AC HP HH		AC HP HH				AC HP HH
I-3. Two-capacity Compressor	AC HP HH	AC HP HH	HP HH			AC HP	HP HH	AC HP HH	AC HP	HP HH	AC HP HH		AC HP HH		AC HP HH				AC HP HH
I-4. Variable-speed Compressor	AC HP HH	AC HP HH	HP HH			AC HP	HP HH	AC HP HH	AC HP	HP HH	AC HP HH		AC HP HH		AC HP HH				AC HP HH
II-1. Ducted												AC HP HH		AC HP HH					
II-2. Non-Ducted																			
III. Special Features				M	G														
IV. Secondary Test Method																O	C	R	

Legend for Table Entries:

Categories I and II: AC = applies for an Air Conditioner that meets the corresponding Column 1 "Key Equipment . . ." criterion
HP = applies for a Heat Pump that meets the corresponding Column 1 "Key Equipment . . ." criterion
HH = applies for a Heating-only Heat pump that meets the corresponding Column 1 "Key Equipment . . ." criterion

Category III: G = ganged mini-splits or multi-splits;
H = heat pump with a heat comfort controller;
M = units with a multi-speed outdoor fan.

Category IV: O = Outdoor Air Enthalpy Method; C = Compressor Calibration Method; R = Refrigerant Enthalpy Method

Table 1B. Selection of Test Procedure Sections: Section 3 (Testing Procedures)

Key Equipment Features and Secondary Test Method / Sections From the Test Procedure	3. to 3.1.4	3.1.4.1 to 3.1.4.1.1	3.1.4.1.2	3.1.4.2	3.1.4.3	3.1.4.4 to 3.1.4.4.2	3.1.4.4.3	3.1.4.4.4	3.1.4.5	3.1.4.6 to 3.1.4.7	3.1.5 to 3.1.8	3.1.9	3.2.1	3.2.2 to 3.2.2.2	3.2.3	3.2.4	3.3 to 3.5	3.5.1	3.5.2	3.5.3
I-1. Single-speed Compressor; Variable-speed, Variable Air Volume Indoor Fan	AC HP HH			AC HP					HP HH		AC HP HH	HP HH		AC HP			AC HP			AC HP
I-2. Single-speed Compressor Except as Covered by "I-1"	AC HP HH										AC HP HH	HP HH	AC HP				AC HP			AC HP
I-3. Two-capacity Compressor	AC HP HH			AC HP					HP HH		AC HP HH	HP HH			AC HP		AC HP			AC HP
I-4. Variable-speed Compressor	AC HP HH			AC HP	AC HP				HP HH	HP HH	AC HP HH	HP HH				AC HP	AC HP			AC HP
II-1. Ducted		AC HP				HP	HH											AC HP		
II-2. Non-Ducted			AC HP					HP HH											AC HP	
III. Special Features												H								
IV. Secondary Test Method																				

Legend for Table Entries:

Categories I and II: AC = applies for an Air Conditioner that meets the corresponding Column 1 "Key Equipment . . ." criterion
HP = applies for a Heat Pump that meets the corresponding Column 1 "Key Equipment . . ." criterion
HH = applies for a Heating-only Heat pump that meets the corresponding Column 1 "Key Equipment . . ." criterion

Category III: G = ganged mini-splits or multi-splits;
H = heat pump with a heat comfort controller;
M = units with a multi-speed outdoor fan.

Category IV: O = Outdoor Air Enthalpy Method; C = Compressor Calibration Method; R = Refrigerant Enthalpy Method

Table 1B. Selection of Test Procedure Sections: Section 3 (Testing Procedures) (continued)

Key Equipment Features and Secondary Test Method / Sections From the Test Procedure	3.6.1	3.6.2	3.6.3	3.6.4	3.6.5	3.7 to 3.8.1	3.9 to 3.10	3.11	3.11.1 to 3.11.1.3	3.11.2	3.11.3	3.12
I-1. Single-speed Compressor; Variable-speed, Variable Air Volume Indoor Fan		HP HH				HP HH	HP HH	AC HP HH				AC HP HH
I-2. Single-speed Compressor Except as Covered by "I-1"	HP HH					HP HH	HP HH	AC HP HH				AC HP HH
I-3. Two-capacity Compressor			HP HH			HP HH	HP HH	AC HP HH				AC HP HH
I-4. Variable-speed Compressor				HP HH		HP HH	HP HH	AC HP HH				AC HP HH
II-1. Ducted												
II-2. Non-Ducted												
III. Special Features					H							
IV. Secondary Test Method									O	C	R	

Legend for Table Entries:

Categories I and II: AC = applies for an Air Conditioner that meets the corresponding Column 1 "Key Equipment . . ." criterion
HP = applies for a Heat Pump that meets the corresponding Column 1 "Key Equipment . . ." criterion
HH = applies for a Heating-only Heat pump that meets the corresponding Column 1 "Key Equipment . . ." criterion

Category III: G = ganged mini-splits or multi-splits;
H = heat pump with a heat comfort controller;
M = units with a multi-speed outdoor fan.

Category IV: O = Outdoor Air Enthalpy Method; C = Compressor Calibration Method; R = Refrigerant Enthalpy Method

Table 1C. Selection of Test Procedure Sections: Section 4 (Calculations of Seasonal Performance Descriptors)

Key Equipment Features and Secondary Test Method / Sections From the Test Procedure	4 to 4.1	4.1.1	4.1.2 to 4.1.2.2	4.1.3 to 4.1.3.4	4.1.4 to 4.1.4.3	4.2	4.2.1	4.2.2	4.2.3 to 4.2.3.4	4.2.4 to 4.2.4.3	4.2.5 to 4.2.5.4	4.3 to 4.3.2	4.4
I-1. Single-speed Compressor; Variable-speed Variable Air Volume Indoor Fan	AC HP		AC HP			HP HH		HP HH				HP	AC HP HH
I-2. Single-speed Compressor Except as Covered by "I-1"		AC HP				HP HH	HP HH					HP	AC HP HH
I-3. Two-capacity Compressor	AC HP			AC HP		HP HH			HP HH			HP	AC HP HH
I-4. Variable-speed Compressor	AC HP				AC HP	HP HH				HP HH		HP	AC HP HH
II-1. Ducted													
II-2. Non-Ducted													
III. Special Features						H					H		
IV. Secondary Test Method													

Legend for Table Entries:

Categories I and II: AC = applies for an Air Conditioner that meets the corresponding Column 1 "Key Equipment . . ." criterion

HP = applies for a Heat Pump that meets the corresponding Column 1 "Key Equipment . . ." criterion

HH = applies for a Heating-only Heat pump that meets the corresponding Column 1 "Key Equipment . . ." criterion

Category III: G = ganged mini-splits or multi-splits;

H = heat pump with a heat comfort controller;

M = units with a multi-speed outdoor fan.

Category IV: O = Outdoor Air Enthalpy Method; C = Compressor Calibration Method; R = Refrigerant Enthalpy Method

2.1 Test room requirements. a. Test using two side-by-side rooms, an indoor test room and an outdoor test room. For multiple-split air conditioners and heat pumps (see Definition 1.30), however, use as many available indoor test rooms as needed to accommodate the total number of indoor units. These rooms must comply with the requirements specified in sections 8.1.2 and 8.1.3 of ASHRAE Standard 37–2005 (incorporated by reference, see § 430.22).

b. Inside these test rooms, use artificial loads during cyclic tests and frost accumulation tests, if needed, to produce stabilized room air temperatures. For one room, select an electric resistance heater(s) having a heating capacity that is approximately equal to the heating capacity of the test unit's condenser. For the second room, select a heater(s) having a capacity that is close to the sensible cooling capacity of the test unit's evaporator. When applied, cycle the heater located in the same room as the test

unit evaporator coil ON and OFF when the test unit cycles ON and OFF. Cycle the heater located in the same room as the test unit condensing coil ON and OFF when the test unit cycles OFF and ON.

2.2 Test unit installation requirements. a. Install the unit according to section 8.2 of ASHRAE Standard 37–2005 (incorporated by reference, see §430.22). With respect to interconnecting tubing used when testing split systems, however, follow the requirements given in section 6.1.3.5 of ARI Standard 210/240–2006 (incorporated by reference, see §430.22). When testing triple-split systems (see Definition 1.44), use the tubing length specified in section 6.1.3.5 of ARI Standard 210/240–2006 (incorporated by reference, see §430.22) to connect the outdoor coil, indoor compressor section, and indoor coil while still meeting the requirement of exposing 10 feet of the tubing to outside conditions. When testing split systems having multiple indoor coils, connect each indoor fan-coil to the outdoor unit using: (a) 25 feet of tubing, or (b) tubing furnished by the manufacturer, whichever is longer. If they are needed to make a secondary measurement of capacity, install refrigerant pressure measuring instruments as described in section 8.2.5 of ASHRAE Standard 37–2005 (incorporated by reference, see §430.22). Refer to section 2.10 of this appendix to learn which secondary methods require refrigerant pressure measurements. At a minimum, insulate the low-pressure line(s) of a split-system with insulation having an inside diameter that matches the refrigerant tubing and a nominal thickness of 0.5 inch.

b. For units designed for both horizontal and vertical installation or for both up-flow and down-flow vertical installations, the manufacturer must specify the orientation used for testing. Conduct testing with the following installed:

(1) the most restrictive filter(s);

(2) supplementary heating coils; and

(3) other equipment specified as part of the unit, including all hardware used by a heat comfort controller if so equipped (see Definition 1.28). For small-duct, high-velocity systems, configure all balance dampers or restrictor devices on or inside the unit to fully open or lowest restriction.

c. Testing a ducted unit without having an indoor air filter installed is permissible as long as the minimum external static pressure requirement is adjusted as stated in Table 2, note 3 (see section 3.1.4). Except as noted in section 3.1.9, prevent the indoor air supplementary heating coils from operating during all tests. For coil-only indoor units that are supplied without an enclosure, create an enclosure using 1 inch fiberglass ductboard having a nominal density of 6 pounds per cubic foot. Or alternatively, use some other insulating material having a thermal resistance (''R'' value) between 4 and 6 hr·ft^2· °F/Btu. For units where the coil is housed within an enclosure or cabinet, no extra insulating or sealing is allowed.

2.2.1 Defrost control settings. Set heat pump defrost controls at the normal settings which most typify those encountered in generalized climatic region IV. (Refer to Figure 2 and Table 17 of section 4.2 for information on region IV.) For heat pumps that use a time-adaptive defrost control system (see Definition 1.42), the manufacturer must specify the frosting interval to be used during Frost Accumulation tests and provide the procedure for manually initiating the defrost at the specified time. To ease testing of any unit, the manufacturer should provide information and any necessary hardware to manually initiate a defrost cycle.

2.2.2 Special requirements for units having a multiple-speed outdoor fan. Configure the multiple-speed outdoor fan according to the manufacturer's specifications, and thereafter, leave it unchanged for all tests. The controls of the unit must regulate the operation of the outdoor fan during all lab tests except dry coil cooling mode tests. For dry coil cooling mode tests, the outdoor fan must operate at the same speed used during the required wet coil test conducted at the same outdoor test conditions.

2.2.3 Special requirements for multi-split air conditioners and heat pumps, and systems composed of multiple mini-split units (outdoor units located side-by-side) that would normally operate using two or more indoor thermostats. For any test where the system is operated at part load (i.e., one or more compressors ''off'', operating at the intermediate or minimum compressor speed, or at low compressor capacity), the manufacturer shall designate the particular indoor coils that are turned off during the test. For variable-speed systems, the manufacturer must designate at least one indoor unit that is turned off for all tests conducted at minimum compressor speed. For all other part-load tests, the manufacturer shall choose to turn off zero, one, two, or more indoor units. The chosen configuration shall remain unchanged for all tests conducted at the same compressor speed/capacity. For any indoor coil that is turned off during a test, take steps to cease forced airflow through this indoor coil and block its outlet duct. Because these types of systems will have more than one indoor fan and possibly multiple outdoor fans and compressor systems, references in this test procedure to a single indoor fan, outdoor fan, and compressor means all indoor fans, all outdoor fans, and all compressor systems that are turned on during the test.

2.2.4 Wet-bulb temperature requirements for the air entering the indoor and outdoor coils.

2.2.4.1 Cooling mode tests. For wet-coil cooling mode tests, regulate the water vapor

content of the air entering the indoor unit to the applicable wet-bulb temperature listed in Tables 3 to 6. As noted in these same tables, achieve a wet-bulb temperature during dry-coil cooling mode tests that results in no condensate forming on the indoor coil. Controlling the water vapor content of the air entering the outdoor side of the unit is not required for cooling mode tests except when testing:

(1) Units that reject condensate to the outdoor coil during wet coil tests. Tables 3–6 list the applicable wet-bulb temperatures.

(2) Single-packaged units where all or part of the indoor section is located in the outdoor test room. The average dew point temperature of the air entering the outdoor coil during wet coil tests must be within ±3.0 °F of the average dew point temperature of the air entering the indoor coil over the 30-minute data collection interval described in section 3.3. For dry coil tests on such units, it may be necessary to limit the moisture content of the air entering the outdoor side of the unit to meet the requirements of section 3.4.

2.2.4.2 Heating mode tests. For heating mode tests, regulate the water vapor content of the air entering the outdoor unit to the applicable wet-bulb temperature listed in Tables 9 to 12. The wet-bulb temperature entering the indoor side of the heat pump must not exceed 60 °F. Additionally, if the Outdoor Air Enthalpy test method is used while testing a single-packaged heat pump where all or part of the outdoor section is located in the indoor test room, adjust the wet-bulb temperature for the air entering the indoor side to yield an indoor-side dew point temperature that is as close as reasonably possible to the dew point temperature of the outdoor-side entering air.

2.2.5 Additional refrigerant charging requirements. Charging according to the ''manufacturer's published instructions,'' as stated in section 8.2 of ASHRAE Standard 37–2005 (incorporated by reference, see §430.22), means the manufacturer's installation instructions that come packaged with the unit.If a unit requires charging but the installation instructions do not specify a charging procedure, then evacuate the unit and add the nameplate refrigerant charge. Where the manufacturer's installation instructions contain two sets of refrigerant charging criteria, one for field installations and one for lab testing, use the field installation criteria. For third-party testing, the test laboratory may consult with the manufacturer about the refrigerant charging procedure and make any needed corrections so long as they do not contradict the published installation instructions. The manufacturer may specify an alternative charging criteria to the third-party laboratory so long as the manufacturer thereafter revises the published installation instructions accordingly.

2.3 Indoor air volume rates. If a unit's controls allow for overspeeding the indoor fan (usually on a temporary basis), take the necessary steps to prevent overspeeding during all tests.

2.3.1 Cooling tests. a. Set indoor fan control options (*e.g.*, fan motor pin settings, fan motor speed) according to the published installation instructions that are provided with the equipment while meeting the airflow requirements that are specified in sections 3.1.4.1 to 3.1.4.3.

b. Express the Cooling Full-load Air Volume Rate, the Cooling Minimum Air Volume Rate, and the Cooling Intermediate Air Volume Rate in terms of standard air.

2.3.2 Heating tests. a. If needed, set the indoor fan control options (*e.g.*, fan motor pin settings, fan motor speed) according to the published installation instructions that are provided with the equipment. Do this set-up while meeting all applicable airflow requirements specified in sections 3.1.4.4 to 3.1.4.7.

b. Express the Heating Certified Air Volume Rate, the Heating Minimum Air Volume Rate, the Heating Intermediate Air Volume Rate, and the Heating Nominal Air Volume Rate in terms of standard air.

2.4 Indoor coil inlet and outlet duct connections. Insulate and/or construct the outlet plenum described in section 2.4.1 and, if installed, the inlet plenum described in section 2.4.2 with thermal insulation having a nominal overall sistance (R-value) of at least 19 hr·ft^{2}· °F/Btu.

2.4.1 Outlet plenum for the indoor unit. a. Attach a plenum to the outlet of the indoor coil. (NOTE: for some packaged systems, the indoor coil may be located in the outdoor test room.)

b. For systems having multiple indoor coils, attach a plenum to each indoor coil outlet. Connect two or more outlet plenums to a single common duct so that each indoor coil ultimately connects to an airflow measuring apparatus (section 2.6). If using more than one indoor test room, do likewise, creating one or more common ducts within each test room that contains multiple indoor coils. At the plane where each plenum enters a common duct, install an adjustable airflow damper and use it to equalize the static pressure in each plenum. Each outlet air temperature grid (section 2.5.4) and airflow measuring apparatus are located downstream of the inlet(s) to the common duct.

c. For small-duct, high-velocity systems, install an outlet plenum that has a diameter that is equal to or less than the value listed below. The limit depends only on the cooling Full-Load Air Volume Rate (see section 3.1.4.1.1) and is effective regardless of the flange dimensions on the outlet of the unit (or an air supply plenum adapter accessory, if installed in accordance with the manufacturer's installation instructions).

d. Add a static pressure tap to each face of the (each) outlet plenum, if rectangular, or at four evenly distributed locations along the circumference of an oval or round plenum. Create a manifold that connects the four static pressure taps. Figure 1 shows two of the three options allowed for the manifold configuration; the third option is the broken-ring, four-to-one manifold configuration that is shown in Figure 7a of ASHRAE Standard 37–2005 (incorporated by reference, see §430.22). See Figures 7a, 7b, 7c, and 8 of ASHRAE Standard 37–2005 (incorporated by reference, see §430.22) for the cross-sectional dimensions and minimum length of the (each) plenum and the locations for adding the static pressure taps for units tested with and without an indoor fan installed.

Cooling full-load air volume rate (scfm)	Maximum diameter* of outlet plenum (inches)
≤500	6
501 to 700	7
701 to 900	8
901 to 1100	9
1101 to 1400	10
1401 to 1750	11

*If the outlet plenum is rectangular, calculate its equivalent diameter using ($4A/P$,) where A is the area and P is the perimeter of the rectangular plenum, and compare it to the listed maximum diameter.

2.4.2 Inlet plenum for the indoor unit. Install an inlet plenum when testing a coil-only indoor unit or a packaged system where the indoor coil is located in the outdoor test room. Add static pressure taps at the center of each face of this plenum, if rectangular, or at four evenly distributed locations along the circumference of an oval or round plenum. Make a manifold that connects the four static-pressure taps using one of the three configurations specified in section 2.4.1. See Figures 7b, 7c, and Figure 8 of ASHRAE Standard 37–2005 (incorporated by reference, see §430.22) for cross-sectional dimensions, the minimum length of the inlet plenum, and the locations of the static-pressure taps. When testing a ducted unit having an indoor fan (and the indoor coil is in the indoor test room), the manufacturer has the option to test with or without an inlet plenum installed. Space limitations within the test room may dictate that the manufacturer choose the latter option. If used, construct the inlet plenum and add the four static-pressure taps as shown in Figure 8 of ASHRAE Standard 37–2005 (incorporated by reference, see §430.22). Manifold the four static-pressure taps using one of the three configurations specified in section 2.4.1. Never use an inlet plenum when testing a non-ducted system.

2.5 Indoor coil air property measurements and air damper box applications. a. Measure the dry-bulb temperature and water vapor content of the air entering and leaving the indoor coil. If needed, use an air sampling device to divert air to a sensor(s) that measures the water vapor content of the air. See Figure 2 of ASHRAE Standard 41.1–86 (RA 01) (incorporated by reference, see §430.22) for guidance on constructing an air sampling device. The sampling device may also divert air to a remotely located sensor(s) that measures dry bulb temperature. The air sampling device and the remotely located temperature sensor(s) may be used to determine the entering air dry bulb temperature during any test. The air sampling device and the remotely located leaving air dry bulb temperature sensor(s) may be used for all tests except:

(1) Cyclic tests; and

(2) Frost accumulation tests.

b. An acceptable alternative in all cases, including the two special cases noted above, is to install a grid of dry bulb temperature sensors within the outlet and inlet ducts. Use a temperature grid to get the average dry bulb temperature at one location, leaving or entering, or when two grids are applied as a thermopile, to directly obtain the temperature difference. A grid of temperature sensors (which may also be used for determining average leaving air dry bulb temperature) is required to measure the temperature distribution within a cross-section of the leaving airstream.

c. Use an inlet and outlet air damper box when testing ducted systems if conducting one or both of the cyclic tests listed in sections 3.2 and 3.6. Otherwise, install an outlet air damper box when testing heat pumps, both ducted and non-ducted, that cycle off the indoor fan during defrost cycles if no other means is available for preventing natural or forced convection through the indoor unit when the indoor fan is off. Never use an inlet damper box when testing a non-ducted system.

2.5.1 Test set-up on the inlet side of the indoor coil: for cases where the inlet damper box is installed. a. Install the inlet side damper box as specified in section 2.5.1.1 or 2.5.1.2, whichever applies. Insulate or construct the ductwork between the point where the air damper is installed and where the connection is made to either the inlet plenum (section 2.5.1.1 units) or the indoor unit (section 2.5.1.2 units) with thermal insulation that has a nominal overall resistance (R-value) of at least 19 hr·ft^{2,} °F/Btu.

b. Locate the grid of entering air dry-bulb temperature sensors, if used, at the inlet of the damper box. Locate the air sampling device, or the sensor used to measure the water vapor content of the inlet air, at a location immediately upstream of the damper box inlet.

2.5.1.1 If the section 2.4.2 inlet plenum is installed. Install the inlet damper box upstream of the inlet plenum. The cross-sectional flow area of the damper box must be

equal to or greater than the flow area of the inlet plenum. If needed, use an adaptor plate or a transition duct section to connect the damper box with the inlet plenum.

2.5.1.2 If the section 2.4.2 inlet plenum is not installed. Install the damper box immediately upstream of the air inlet of the indoor unit. The cross-sectional dimensions of the damper box must be equal to or greater than the dimensions of the indoor unit inlet. If needed, use an adaptor plate or a short transition duct section to connect the damper box with the unit's air inlet. Add static pressure taps at the center of each face of the damper box, if rectangular, or at four evenly distributed locations along the circumference, if oval or round. Locate the pressure taps between the inlet damper and the inlet of the indoor unit. Make a manifold that connects the four static pressure taps.

2.5.2 Test set-up on the inlet side of the indoor unit: for cases where no inlet damper box is installed. If using the section 2.4.2 inlet plenum and a grid of dry bulb temperature sensors, mount the grid at a location upstream of the static pressure taps described in section 2.4.2, preferably at the entrance plane of the inlet plenum. If the section 2.4.2 inlet plenum is not used, but a grid of dry bulb temperature sensors is used, locate the grid approximately 6 inches upstream from the inlet of the indoor coil. Or, in the case of non-ducted units having multiple indoor coils, locate a grid approximately 6 inches upstream from the inlet of each indoor coil. Position an air sampling device, or the sensor used to measure the water vapor content of the inlet air, immediately upstream of the (each) entering air dry-bulb temperature sensor grid. If a grid of sensors is not used, position the entering air sampling device (or the sensor used to measure the water vapor content of the inlet air) as if the grid were present.

2.5.3 Indoor coil static pressure difference measurement. Section 6.5.2 of ASHRAE Standard 37–2005 (incorporated by reference, see §430.22) describes the method for fabricating static-pressure taps. Also refer to Figure 2A of ASHRAE Standard 51–99/AMCA Standard 210–99 (incorporated by reference, see §430.22). Use a differential pressure measuring instrument that is accurate to within ±0.01 inches of water and has a resolution of at least 0.01 inches of water to measure the static pressure difference between the indoor coil air inlet and outlet. Connect one side of the differential pressure instrument to the manifolded pressure taps installed in the outlet plenum. Connect the other side of the instrument to the manifolded pressure taps located in either the inlet plenum or incorporated within the air damper box. If an inlet plenum or inlet damper box are not used, leave the inlet side of the differential pressure instrument open to the surrounding atmosphere. For non-ducted systems that are tested with multiple outlet plenums, measure the static pressure within each outlet plenum relative to the surrounding atmosphere.

2.5.4 Test set-up on the outlet side of the indoor coil. a. Install an interconnecting duct between the outlet plenum described in section 2.4.1 and the airflow measuring apparatus described below in section 2.6. The cross-sectional flow area of the interconnecting duct must be equal to or greater than the flow area of the outlet plenum or the common duct used when testing non-ducted units having multiple indoor coils. If needed, use adaptor plates or transition duct sections to allow the connections. To minimize leakage, tape joints within the interconnecting duct (and the outlet plenum). Construct or insulate the entire flow section with thermal insulation having a nominal overall resistance (R-value) of at least 19 $hr \cdot ft^{2} \cdot {}^{\circ}F/Btu$.

b. Install a grid(s) of dry-bulb temperature sensors inside the interconnecting duct. Also, install an air sampling device, or the sensor(s) used to measure the water vapor content of the outlet air, inside the interconnecting duct. Locate the dry-bulb temperature grid(s) upstream of the air sampling device (or the in-duct sensor(s) used to measure the water vapor content of the outlet air). Air that circulates through an air sampling device and past a remote water-vapor-content sensor(s) must be returned to the interconnecting duct at a point:

(1) Downstream of the air sampling device;

(2) Upstream of the outlet air damper box, if installed; and

(3) Upstream of the section 2.6 airflow measuring apparatus.

2.5.4.1 Outlet air damper box placement and requirements. If using an outlet air damper box (see section 2.5), install it within the interconnecting duct at a location downstream of the location where air from the sampling device is reintroduced or downstream of the in-duct sensor that measures water vapor content of the outlet air. The leakage rate from the combination of the outlet plenum, the closed damper, and the duct section that connects these two components must not exceed 20 cubic feet per minute when a negative pressure of 1 inch of water column is maintained at the plenum's inlet.

2.5.4.2 Procedures to minimize temperature maldistribution. Use these procedures if necessary to correct temperature maldistributions. Install a mixing device(s) upstream of the outlet air, dry-bulb temperature grid (but downstream of the outlet plenum static pressure taps). Use a perforated screen located between the mixing device and the dry-bulb temperature grid, with a maximum open area of 40 percent. One or both items should help to meet the maximum outlet air temperature distribution specified in section

3.1.8. Mixing devices are described in sections 6.3—6.5 of ASHRAE Standard 41.1–86 (RA 01) (incorporated by reference, see §430.22) and section 5.2.2 of ASHRAE Standard 41.2–87 (RA 92) (incorporated by reference, see §430.22).

2.5.4.3 Minimizing air leakage. For small-duct, high-velocity systems, install an air damper near the end of the interconnecting duct, just prior to the transition to the airflow measuring apparatus of section 2.6. To minimize air leakage, adjust this damper such that the pressure in the receiving chamber of the airflow measuring apparatus is no more than 0.5 inch of water higher than the surrounding test room ambient. In lieu of installing a separate damper, use the outlet air damper box of sections 2.5 and 2.5.4.1 if it allows variable positioning. Also apply these steps to any conventional indoor blower unit that creates a static pressure within the receiving chamber of the airflow measuring apparatus that exceeds the test room ambient pressure by more than 0.5 inches of water column.

2.5.5 Dry bulb temperature measurement. a. Measure dry bulb temperatures as specified in sections 4, 5, 6.1–6.10, 9, 10, and 11 of ASHRAE Standard 41.1–86 (RA 01) (incorporated by reference, see §430.22). The transient testing requirements cited in section 4.3 of ASHRAE Standard 41.1–86 (RA 01) (incorporated by reference, see §430.22) apply if conducting a cyclic or frost accumulation test.

b. Distribute the sensors of a dry-bulb temperature grid over the entire flow area. The required minimum is 9 sensors per grid.

2.5.6 Water vapor content measurement. Determine water vapor content by measuring dry-bulb temperature combined with the air wet-bulb temperature, dew point temperature, or relative humidity. If used, construct and apply wet-bulb temperature sensors as specified in sections 4, 5, 6, 9, 10, and 11 of ASHRAE Standard 41.1–86 (RA 01) (incorporated by reference, see §430.22). As specified in ASHRAE 41.1–86 (RA 01) (incorporated by reference, see §430.22), the temperature sensor (wick removed) must be accurate to within ±0.2 °F. If used, apply dew point hygrometers as specified in sections 5 and 8 of ASHRAE Standard 41.6–94 (RA 01) (incorporated by reference, see §430.22). The dew point hygrometers must be accurate to within ±0.4 °F when operated at conditions that result in the evaluation of dew points above 35 °F. If used, a relative humidity (RH) meter must be accurate to within ±0.7% RH. Other means to determine the psychrometric state of air may be used as long as the measurement accuracy is equivalent to or better than the accuracy achieved from using a wet-bulb temperature sensor that meets the above specifications.

2.5.7 Air damper box performance requirements. If used (see section 2.5), the air damper box(es) must be capable of being completely opened or completely closed within 10 seconds for each action.

2.6 Airflow measuring apparatus. a. Fabricate and operate an Air Flow Measuring Apparatus as specified in section 6.6 of ASHRAE Standard 116–95 (RA05) (incorporated by reference, see §430.22). Refer to Figure 12 of ASHRAE Standard 51–99/AMCA Standard 210–99 (incorporated by reference, see §430.22) or Figure 14 of ASHRAE Standard 41.2–87 (RA 92) (incorporated by reference, see §430.22) for guidance on placing the static pressure taps and positioning the diffusion baffle (settling means) relative to the chamber inlet.

b. Connect the airflow measuring apparatus to the interconnecting duct section described in section 2.5.4. See sections 6.1.1, 6.1.2, and 6.1.4, and Figures 1, 2, and 4 of ASHRAE Standard 37–2005 (incorporated by reference, see §430.22), and Figures D1, D2, and D4 of ARI Standard 210/240–2006 (incorporated by reference, see §430.22) for illustrative examples of how the test apparatus may be applied within a complete laboratory set-up. Instead of following one of these examples, an alternative set-up may be used to handle the air leaving the airflow measuring apparatus and to supply properly conditioned air to the test unit's inlet. The alternative set-up, however, must not interfere with the prescribed means for measuring airflow rate, inlet and outlet air temperatures, inlet and outlet water vapor contents, and external static pressures, nor create abnormal conditions surrounding the test unit. (Note: Do not use an enclosure as described in section 6.1.3 of ASHRAE Standard 37–2005 (incorporated by reference, see §430.22) when testing triple-split units.)

2.7 Electrical voltage supply. Perform all tests at the voltage specified in section 6.1.3.2 of ARI Standard 210/240–2006 (incorporated by reference, see §430.22) for ''Standard Rating Tests.'' Measure the supply voltage at the terminals on the test unit using a volt meter that provides a reading that is accurate to within ±1.0 percent of the measured quantity.

2.8 Electrical power and energy measurements. a. Use an integrating power (watt-hour) measuring system to determine the electrical energy or average electrical power supplied to all components of the air conditioner or heat pump (including auxiliary components such as controls, transformers, crankcase heater, integral condensate pump on non-ducted indoor units, etc.). The watt-hour measuring system must give readings that are accurate to within ±0.5 percent. For cyclic tests, this accuracy is required during both the ON and OFF cycles. Use either two different scales on the same watt-hour meter or two separate watt-hour meters. Activate the scale or meter having the lower power rating within 15 seconds after beginning an

OFF cycle. Activate the scale or meter having the higher power rating active within 15 seconds prior to beginning an ON cycle. For ducted units tested with a fan installed, the ON cycle lasts from compressor ON to indoor fan OFF. For ducted units tested without an indoor fan installed, the ON cycle lasts from compressor ON to compressor OFF. For non-ducted units, the ON cycle lasts from indoor fan ON to indoor fan OFF. When testing air conditioners and heat pumps having a variable-speed compressor, avoid using an induction watt/watt-hour meter.

b. When performing section 3.5 and/or 3.8 cyclic tests on non-ducted units, provide instrumentation to determine the average electrical power consumption of the indoor fan motor to within ±1.0 percent. If required according to sections 3.3, 3.4, 3.7, 3.9.1, and/or 3.10, this same instrumentation requirement applies when testing air conditioners and heat pumps having a variable-speed constant-air-volume-rate indoor fan or a variable-speed, variable-air-volume-rate indoor fan.

2.9 Time measurements. Make elapsed time measurements using an instrument that yields readings accurate to within ±0.2 percent.

2.10 Test apparatus for the secondary space conditioning capacity measurement. For all tests, use the Indoor Air Enthalpy Method to measure the unit's capacity. This method uses the test set-up specified in sections 2.4 to 2.6. In addition, for all steady-state tests, conduct a second, independent measurement of capacity as described in section 3.1.1. For split systems, use one of the following secondary measurement methods: Outdoor Air Enthalpy Method, Compressor Calibration Method, or Refrigerant Enthalpy Method. For single packaged units, use either the Outdoor Air Enthalpy Method or the Compressor Calibration Method as the secondary measurement.

2.10.1 Outdoor Air Enthalpy Method. a. To make a secondary measurement of indoor space conditioning capacity using the Outdoor Air Enthalpy Method, do the following:

(1) Measure the electrical power consumption of the test unit;

(2) Measure the air-side capacity at the outdoor coil; and

(3) Apply a heat balance on the refrigerant cycle.

b. The test apparatus required for the Outdoor Air Enthalpy Method is a subset of the apparatus used for the Indoor Air Enthalpy Method. Required apparatus includes the following:

(1) An outlet plenum containing static pressure taps (sections 2.4, 2.4.1, and 2.5.3),

(2) An airflow measuring apparatus (section 2.6),

(3) A duct section that connects these two components and itself contains the instrumentation for measuring the dry-bulb temperature and water vapor content of the air leaving the outdoor coil (sections 2.5.4, 2.5.5, and 2.5.6), and

(4) On the inlet side, a sampling device and optional temperature grid (sections 2.5 and 2.5.2).

c. During the preliminary tests described in sections 3.11.1 and 3.11.1.1, measure the evaporator and condenser temperatures or pressures. On both the outdoor coil and the indoor coil, solder a thermocouple onto a return bend located at or near the midpoint of each coil or at points not affected by vapor superheat or liquid subcooling. Alternatively, if the test unit is not sensitive to the refrigerant charge, connect pressure gages to the access valves or to ports created from tapping into the suction and discharge lines. Use this alternative approach when testing a unit charged with a zeotropic refrigerant having a temperature glide in excess of 1 °F at the specified test conditions.

2.10.2 Compressor Calibration Method. Measure refrigerant pressures and temperatures to determine the evaporator superheat and the enthalpy of the refrigerant that enters and exits the indoor coil. Determine refrigerant flow rate or, when the superheat of the refrigerant leaving the evaporator is less than 5 °F, total capacity from separate calibration tests conducted under identical operating conditions. When using this method, install instrumentation, measure refrigerant properties, and adjust the refrigerant charge according to section 7.4.2 of ASHRAE Standard 37–2005 (incorporated by reference, see § 430.22). Use refrigerant temperature and pressure measuring instruments that meet the specifications given in sections 5.1.1 and 5.2 of ASHRAE Standard 37–2005 (incorporated by reference, see § 430.22).

2.10.3 Refrigerant Enthalpy Method. For this method, calculate space conditioning capacity by determining the refrigerant enthalpy change for the indoor coil and directly measuring the refrigerant flow rate. Use section 7.5.2 of ASHRAE Standard 37–2005 (incorporated by reference, see § 430.22) for the requirements for this method, including the additional instrumentation requirements, and information on placing the flow meter and a sight glass. Use refrigerant temperature, pressure, and flow measuring instruments that meet the specifications given in sections 5.1.1, 5.2, and 5.5.1 of ASHRAE Standard 37–2005 (incorporated by reference, see § 430.22).

2.11 Measurement of test room ambient conditions. a. If using a test set-up where air is ducted directly from the conditioning apparatus to the indoor coil inlet (see Figure 2, Loop Air-Enthalpy Test Method Arrangement, of ASHRAE Standard 37–2005 (incorporated by reference, see § 430.22)), add instrumentation to permit measurement of the indoor test room dry-bulb temperature.

b. If the Outdoor Air Enthalpy Method is not used, add instrumentation to measure the dry-bulb temperature and the water vapor content of the air entering the outdoor coil. If an air sampling device is used, construct and apply the device as per section 6 of ASHRAE Standard 41.1–86 (RA 01) (incorporated by reference, see §430.22). Take steps (*e.g.*, add or re-position a lab circulating fan), as needed, to minimize the magnitude of the temperature distribution non-uniformity. Position any fan in the outdoor test room while trying to keep air velocities in the vicinity of the test unit below 500 feet per minute.

c. Measure dry bulb temperatures as specified in sections 4, 5, 6.1–6.10, 9, 10, and 11 of ASHRAE Standard 41.1–86 (RA 01) (incorporated by reference, see §430.22). Measure water vapor content as stated above in section 2.5.6.

2.12 Measurement of indoor fan speed. When required, measure fan speed using a revolution counter, tachometer, or stroboscope that gives readings accurate to within ±1.0 percent.

2.13 Measurement of barometric pressure. Determine the average barometric pressure during each test. Use an instrument that meets the requirements specified in section 5.2 of ASHRAE Standard 37–2005(incorporated by reference, see §430.22).

3. Testing Procedures

3.1 General Requirements. If, during the testing process, an equipment set-up adjustment is made that would alter the performance of the unit when conducting an already completed test, then repeat all tests affected by the adjustment. For cyclic tests, instead of maintaining an air volume rate, for each airflow nozzle, maintain the static pressure difference or velocity pressure during an ON period at the same pressure difference or velocity pressure as measured during the steady-state test conducted at the same test conditions.

3.1.1 Primary and secondary test methods. For all tests, use the Indoor Air Enthalpy Method test apparatus to determine the unit's space conditioning capacity. The procedure and data collected, however, differ slightly depending upon whether the test is a steady-state test, a cyclic test, or a frost accumulation test. The following sections described these differences. For all steady-state tests (*i.e.*, the A, A_2, A_1, B, B_2, B_1, C, C_1, EV, F_1, G_1, $H0_1$, H_1, $H1_2$, $H1_1$, HI_N, H_3, $H3_2$, and $H3_1$ Tests), in addition, use one of the acceptable secondary methods specified in section 2.10 to determine indoor space conditioning capacity. Calculate this secondary check of capacity according to section 3.11. The two capacity measurements must agree to within 6 percent to constitute a valid test. For this capacity comparison, use the Indoor Air Enthalpy Method capacity that is calculated in section 7.3 of ASHRAE Standard 37–2005 (incorporated by reference, see §430.22) (and, if testing a coil-only unit, do not make the after-test fan heat adjustments described in section 3.3, 3.4, 3.7, and 3.10 of this appendix). However, include the appropriate section 3.3 to 3.5 and 3.7 to 3.10 fan heat adjustments within the Indoor Air Enthalpy Method capacities used for the section 4 seasonal calculations.

3.1.2 Manufacturer-provided equipment overrides. Where needed, the manufacturer must provide a means for overriding the controls of the test unit so that the compressor(s) operates at the specified speed or capacity and the indoor fan operates at the specified speed or delivers the specified air volume rate.

3.1.3 Airflow through the outdoor coil. For all tests, meet the requirements given in section 6.1.3.4 of ARI Standard 210/240–2006(incorporated by reference, see §430.22) when obtaining the airflow through the outdoor coil.

3.1.4 Airflow through the indoor coil.

3.1.4.1 Cooling Full-load Air Volume Rate.

3.1.4.1.1 Cooling Full-Load Air Volume Rate for Ducted Units. The manufacturer must specify the Cooling Full-load Air Volume Rate. Use this value as long as the following two requirements are satisfied. First, when conducting the A or A_2 Test (exclusively), the measured air volume rate, when divided by the measured indoor air-side total cooling capacity must not exceed 37.5 cubic feet per minute of standard air (scfm) per 1000 Btu/h. If this ratio is exceeded, reduce the air volume rate until this ratio is equaled. Use this reduced air volume rate for all tests that call for using the Cooling Full-load Air Volume Rate. The second requirement is as follows:

a. For all ducted units tested with an indoor fan installed, except those having a variable-speed, constant-air-volume-rate indoor fan. The second requirement applies exclusively to the A or A_2 Test and is met as follows.

1. Achieve the Cooling Full-load Air Volume Rate, determined in accordance with the previous paragraph;

2. Measure the external static pressure;

3. If this pressure is equal to or greater than the applicable minimum external static pressure cited in Table 2, this second requirement is satisfied. Use the current air volume rate for all tests that require the Cooling Full-load Air Volume Rate.

4. If the Table 2 minimum is not equaled or exceeded,

4a. reduce the air volume rate until the applicable Table 2 minimum is equaled or

4b. until the measured air volume rate equals 95 percent of the air volume rate from step 1, whichever occurs first.

5. If the conditions of step 4a occur first, this second requirement is satisfied. Use the

step 4a reduced air volume rate for all tests that require the Cooling Full-load Air Volume Rate.

6. If the conditions of step 4b occur first, make an incremental change to the set-up of the indoor fan (e.g., next highest fan motor pin setting, next highest fan motor speed) and repeat the evaluation process beginning at above step 1. If the indoor fan set-up cannot be further changed, reduce the air volume rate until the applicable Table 2 minimum is equaled. Use this reduced air volume rate for all tests that require the Cooling Full-load Air Volume Rate.

b. For ducted units that are tested with a variable-speed, constant-air-volume-rate indoor fan installed.For all tests that specify the Cooling Full-load Air Volume Rate, obtain an external static pressure as close to (but not less than) the applicable Table 2 value that does not cause instability or an automatic shutdown of the indoor blower.

c. For ducted units that are tested without an indoor fan installed. For the A or A_2 Test, (exclusively), the pressure drop across the indoor coil assembly must not exceed 0.30 inches of water. If this pressure drop is exceeded, reduce the air volume rate until the measured pressure drop equals the specified maximum. Use this reduced air volume rate for all tests that require the Cooling Full-loadAir Volume Rate.

TABLE 2—MINIMUM EXTERNAL STATIC PRESSURE FOR DUCTED SYSTEMS TESTED WITH AN INDOOR FAN INSTALLED

Rated Cooling[1] or Heating[2] Capacity (Btu/h)	Minimum external resistance[3] (Inches of water)	
	All other systems	Small-duct, high-velocity systems[4 5]
Up Thru 28,800	0.10	1.10
29,000 to 42,500	0.15	1.15
43,000 and Above	0.20	1.20

[1] For air conditioners and heat pumps, the value cited by the manufacturer in published literature for the unit's capacity when operated at the *A* or A_2 Test conditions.

[2] For heating-only heat pumps, the value the manufacturer cites in published literature for the unit's capacity when operated at the *H1* or $H1_2$ Test conditions.

[3] For ducted units tested without an air filter installed, increase the applicable tabular value by 0.08 inch of water.

[4] See Definition 1.35 to determine if the equipment qualifies as a small-duct, high-velocity system.

[5] If a closed-loop, air-enthalpy test apparatus is used on the indoor side, limit the resistance to airflow on the inlet side of the indoor blower coil to a maximum value of 0.1 inch of water. Impose the balance of the airflow resistance on the outlet side of the indoor blower.

3.1.4.1.2 Cooling Full-load Air Volume Rate for Non-ducted Units. For non-ducted units, the Cooling Full-load Air Volume Rate is the air volume rate that results during each test when the unit is operated at an external static pressure of zero inches of water.

3.1.4.2 Cooling Minimum Air Volume Rate. a. For ducted units that regulate the speed (as opposed to the cfm) of the indoor fan,

$$\text{Cooling Minimum Air Vol. Rate} = \text{Cooling Full-load Air Vol. Rate} \times \frac{\text{Cooling Minimum Fan Speed}}{A_2\text{Test Fan Speed}},$$

where ''Cooling Minimum Fan Speed'' corresponds to the fan speed used when operating at low compressor capacity (two-capacity system), the fan speed used when operating at the minimum compressor speed (variable-speed system), or the lowest fan speed used when cooling (single-speed compressor and a variable-speed variable-air-volume-rate indoor fan). For such systems, obtain the Cooling Minimum Air Volume Rate regardless of the external static pressure.

b. For ducted units that regulate the air volume rate provided by the indoor fan, the manufacturer must specify the Cooling Minimum Air Volume Rate. For such systems, conduct all tests that specify the Cooling Minimum Air Volume Rate—(*i.e.*, the A_1, B_1, C_1, F_1, and G_1 Tests)—at an external static pressure that does not cause instability or an automatic shutdown of the indoor blower while being as close to, but not less than,

$$A_1,\ B_1,\ C_1,\ F_1,\ \&\ G_1\ \text{Test}\ \Delta P_{st} = \Delta P_{st,\,A_2} \times \left[\frac{\text{Cooling Minimum Air Volume Rate}}{\text{Cooling Full-load Air Volume Rate}}\right]^2,$$

where $\Delta P_{st,A_2}$ is the applicable Table 2 minimum external static pressure that was targeted during the A_2 (and B_2) Test.

c. For ducted two-capacity units that are tested without an indoor fan installed, the Cooling Minimum Air Volume Rate is the

higher of (1) the rate specified by the manufacturer or (2) 75 percent of the Cooling Full-load Air Volume Rate. During the laboratory tests on a coil-only (fanless) unit, obtain this Cooling Minimum Air Volume Rate regardless of the pressure drop across the indoor coil assembly.

d. For non-ducted units, the Cooling Minimum Air Volume Rate is the air volume rate that results during each test when the unit operates at an external static pressure of zero inches of water and at the indoor fan setting used at low compressor capacity (two-capacity system) or minimum compressor speed (variable-speed system). For units having a single-speed compressor and a variable-speed variable-air-volume-rate indoor fan, use the lowest fan setting allowed for cooling.

3.1.4.3 Cooling Intermediate Air Volume Rate. a. For ducted units that regulate the speed of the indoor fan,

$$\text{Cooling Intermediate Air Vol. Rate} = \text{Cooling Full-load Air Vol. Rate} \times \frac{E_V \text{Test Fan Speed}}{A_2 \text{Test Fan Speed}},$$

For such units, obtain the Cooling Intermediate Air Volume Rate regardless of the external static pressure.

b. For ducted units that regulate the air volume rate provided by the indoor fan, the manufacturer must specify the Cooling Intermediate Air Volume Rate. For such systems, conduct the E_V Test at an external static pressure that does not cause instability or an automatic shutdown of the indoor blower while being as close to, but not less than,

$$E_V \text{Test } \Delta P_{st} = \Delta P_{st,\,A_2} \times \left[\frac{\text{Cooling Intermediate Air Volume Rate}}{\text{Cooling Full-load Air Volume Rate}}\right]^2,$$

where $\Delta P_{st,A_2}$ is the applicable Table 2 minimum external static pressure that was targeted during the A_2 (and B_2) Test.

c. For non-ducted units, the Cooling Intermediate Air Volume Rate is the air volume rate that results when the unit operates at an external static pressure of zero inches of water and at the fan speed selected by the controls of the unit for the E_V Test conditions.

3.1.4.4 Heating Full-load Air Volume Rate.

3.1.4.4.1 Ducted heat pumps where the Heating and Cooling Full-load Air Volume Rates are the same. a. Use the Cooling Full-load Air Volume Rate as the Heating Full-loadAir Volume Rate for:

1. Ducted heat pumps that operate at the same indoor fan speed during both the A (or A_2) and the H1 (or $H1_2$) Tests;

2. Ducted heat pumps that regulate fan speed to deliver the same constant air volume rate during both the A (or A_2) and the H1 (or $H1_2$) Tests; and

3. Ducted heat pumps that are tested without an indoor fan installed (except two-capacity northern heat pumps that are tested only at low capacity cooling—see 3.1.4.4.2).

b. For heat pumps that meet the above criteria ''1'' and ''3,'' no minimum requirements apply to the measured external or internal, respectively, static pressure. For heat pumps that meet the above criterion ''2,'' test at an external static pressure that does not cause instability or an automatic shutdown of the indoor blower while being as close to, but not less than, the same Table 2 minimum external static pressure as was specified for the A (or A_2) cooling mode test.

3.1.4.4.2 Ducted heat pumps where the Heating and Cooling Full-loadAir Volume Rates are different due to indoor fan operation. a. For ducted heat pumps that regulate the speed (as opposed to the cfm) of the indoor fan,

$$\text{Heating Full-load Air Volume Rate} = \text{Cooling Full-load Air Volume Rate} \times \frac{\text{H1 or H1}_2 \text{ Test Fan Speed}}{\text{A or A}_2 \text{ Test Fan Speed}},$$

For such heat pumps, obtain the Heating Full-loadAir Volume Rate without regard to the external static pressure.

b. For ducted heat pumps that regulate the air volume rate delivered by the indoor fan, the manufacturer must specify the Heating Full-load Air Volume Rate. For such heat pumps, conduct all tests that specify the Heating Full-load Air Volume Rate at an external static pressure that does not cause instability or an automatic shutdown of the indoor blower while being as close to, but not less than,

$$\text{Heating Full-load } \Delta P_{st} = \text{Cooling Full-load } \Delta P_{st} \times \left[\frac{\text{Heating Full-load Air Volume Rate}}{\text{Cooling Full-load Air Volume Rate}}\right]^2,$$

where the Cooling Certified ΔP_{st} is the applicable Table 2 minimum external static pressure that was specified for the A or A_2 Test.

c. When testing ducted, two-capacity northern heat pumps (see Definition 1.46), use the appropriate approach of the above two cases for units that are tested with an indoor fan installed. For coil-only (fanless) northern heat pumps, the Heating Full-load Air Volume Rate is the lesser of the rate specified by the manufacturer or 133 percent of the Cooling Full-load Air Volume Rate. For this latter case, obtain the Heating Full-load Air Volume Rate regardless of the pressure drop across the indoor coil assembly.

3.1.4.4.3 Ducted heating-only heat pumps. The manufacturer must specify the Heating Full-load Air Volume Rate.

a. For all ducted heating-only heat pumps tested with an indoor fan installed, except those having a variable-speed, constant-air-volume-rate indoor fan. Conduct the following steps only during the first test, the H1 or $H1_2$ Test.

1. Achieve the Heating Full-load Air Volume Rate.

2. Measure the external static pressure.

3. If this pressure is equal to or greater than the Table 2 minimum external static pressure that applies given the heating-only heat pump's rated heating capacity, use the current air volume rate for all tests that require the Heating Full-load Air Volume Rate.

4. If the Table 2 minimum is not equaled or exceeded,

4a. reduce the air volume rate until the applicable Table 2 minimum is equaled or

4b. until the measured air volume rate equals 95 percent of the manufacturer-specified Full-load Air Volume Rate, whichever occurs first.

5. If the conditions of step 4a occurs first, use the step 4a reduced air volume rate for all tests that require the Heating Full-load Air Volume Rate.

6. If the conditions of step 4b occur first, make an incremental change to the set-up of the indoor fan (e.g., next highest fan motor pin setting, next highest fan motor speed) and repeat the evaluation process beginning at above step 1. If the indoor fan set-up cannot be further changed, reduce the air volume rate until the applicable Table 2 minimum is equaled. Use this reduced air volume rate for all tests that require the Heating Full-load Air Volume Rate.

b.For ducted heating-only heat pumps that are tested with a variable-speed, constant-air-volume-rate indoor fan installed. For all tests that specify the Heating Full-load Air Volume Rate, obtain an external static pressure that does not cause instability or an automatic shutdown of the indoor blower while being as close to, but not less than, the applicable Table 2 minimum.

c. For ducted heating-only heat pumps that are tested without an indoor fan installed. For the H1 or $H1_2$ Test, (exclusively), the pressure drop across the indoor coil assembly must not exceed 0.30 inches of water. If this pressure drop is exceeded, reduce the air volume rate until the measured pressure drop equals the specified maximum. Use this reduced air volume rate for all tests that require the Heating Full-load Air Volume Rate.

3.1.4.4.4 Non-ducted heat pumps, including non-ducted heating-only heat pumps. For non-ducted heat pumps, the Heating Full-loadAir Volume Rate is the air volume rate that results during each test when the unit operates at an external static pressure of zero inches of water.

3.1.4.5 Heating Minimum Air Volume Rate.

a. For ducted heat pumps that regulate the speed (as opposed to the cfm) of the indoor fan,

$$\text{Heating Minimum Air Vol. Rate} = \text{Heating Full-load Air Vol. Rate} \times \frac{\text{Heating Minimum Fan Speed}}{H1_2\text{ Test Fan Speed}},$$

where ''Heating Minimum Fan Speed'' corresponds to the fan speed used when operating at low compressor capacity (two-capacity system), the lowest fan speed used at any time when operating at the minimum compressor speed (variable-speed system), or the lowest fan speed used when heating (single-speed compressor and a variable-speed variable-air-volume-rate indoor fan). For such heat pumps, obtain the Heating Minimum Air Volume Rate without regard to the external static pressure.

b. For ducted heat pumps that regulate the air volume rate delivered by the indoor fan, the manufacturer must specify the Heating Minimum Air Volume Rate. For such heat pumps, conduct all tests that specify the Heating Minimum Air Volume Rate—(*i.e.*, the $H0_1$, $H1_1$, $H2_1$, and $H3_1$ Tests)—at an external static pressure that does not cause instability or an automatic shutdown of the indoor blower while being as close to, but not less than,

$$H0_1,\ H1_1,\ H2_1,\ H3_1,\ \text{Test}\ \Delta P_{st} = \Delta P_{st,\,H1_2} \times \left[\frac{\text{Htg Minimum Air Vol. Rate}}{\text{Htg Full-load Air Vol. Rate}}\right]^2,$$

where $\Delta P_{st,H1_2}$

is the minimum external static pressure that was targeted during the $H1_2$ Test.

c. For ducted two-capacity northern heat pumps that are tested with an indoor fan installed, use the appropriate approach of the above two cases.

d. For ducted two-capacity heat pumps that are tested without an indoor fan installed, use the Cooling Minimum Air Volume Rate as the Heating Minimum Air Volume Rate. For ducted two-capacity northern heat pumps that are tested without an indoor fan installed, use the Cooling Full-load Air Volume Rate as the Heating Minimum Air Volume Rate. For ducted two-capacity heating-only heat pumps that are tested without an indoor fan installed, the Heating Minimum Air Volume Rate is the higher of the rate specified by the manufacturer or 75 percent of the Heating Full-load Air Volume Rate. During the laboratory tests on a coil-only (fanless) unit, obtain the Heating Minimum Air Volume Rate without regard to the pressure drop across the indoor coil assembly.

e. For non-ducted heat pumps, the Heating Minimum Air Volume Rate is the air volume rate that results during each test when the unit operates at an external static pressure of zero inches of water and at the indoor fan setting used at low compressor capacity (two-capacity system) or minimum compressor speed (variable-speed system). For units having a single-speed compressor and a variable-speed, variable-air-volume-rate indoor fan, use the lowest fan setting allowed for heating.

3.1.4.6 Heating Intermediate Air Volume Rate. a. For ducted heat pumps that regulate the speed of the indoor fan,

$$\text{Heating Intermediate Air Volume Rate} = \text{Heating Full-load Air Volume Rate} \times \frac{H2_V\ \text{Test Fan Speed}}{H1_2\ \text{Test Fan Speed}},$$

For such heat pumps, obtain the Heating Intermediate Air Volume Rate without regard to the external static pressure.

b. For ducted heat pumps that regulate the air volume rate delivered by the indoor fan, the manufacturer must specify the Heating Intermediate Air Volume Rate. For such heat pumps, conduct the $H2_V$ Test at an external static pressure that does not cause instability or an automatic shutdown of the indoor blower while being as close to, but not less than,

$$H2_V\ \text{Test}\ \Delta P_{st} \Delta P_{st,\,H1_2} \times \left[\frac{\text{Heating Intermediate Air Volume Rate}}{\text{Heating Full-load Air Volume Rate}}\right]^2,$$

where $\Delta P_{st,H1_2}$

is the minimum external static pressure that was specified for the $H1_2$ Test.

c. For non-ducted heat pumps, the Heating Intermediate Air Volume Rate is the air volume rate that results when the heat pump operates at an external static pressure of zero inches of water and at the fan speed selected by the controls of the unit for the $H2_V$ Test conditions.

3.1.4.7 Heating Nominal Air Volume Rate. Except for the noted changes, determine the Heating Nominal Air Volume Rate using the approach described in section 3.1.4.6. Required changes include substituting ''$H1_N$ Test'' for $H2_V$ Test'' within the first section 3.1.4.6 equation, substituting ''$H1_N$ Test ΔP_{st}'' for ''$H2_V$ Test ΔP_{st}'' in the second section 3.1.4.6 equation, substituting ''$H1_N$ Test'' for each ''$H2_V$ Test'', and substituting ''Heating Nominal Air Volume Rate'' for each ''Heating Intermediate Air Volume Rate.''

$$\text{Heating Nominal Air Volume Rate} = \text{Heating Full-load Air Volume Rate} \times \frac{H1_N \text{ Test Fan Speed}}{H1_2 \text{ Test Fan Speed}},$$

$$H1_N \text{ Test } \Delta P_{st} = \Delta P_{st,\,H1_2} \times \left[\frac{\text{Heating Nominal Air Volume Rate}}{\text{Heating Full-load Air Volume Rate}}\right]^2,$$

3.1.5 Indoor test room requirement when the air surrounding the indoor unit is not supplied from the same source as the air entering the indoor unit. If using a test set-up where air is ducted directly from the air reconditioning apparatus to the indoor coil inlet (see Figure 2, Loop Air-Enthalpy Test Method Arrangement, of ASHRAE Standard 37–2005) (incorporated by reference, see §430.22), maintain the dry bulb temperature within the test room within ±5.0 °F of the applicable sections 3.2 and 3.6 dry bulb temperature test condition for the air entering the indoor unit.

3.1.6 Air volume rate calculations. For all steady-state tests and for frost accumulation (H2, $H2_1$, $H2_2$, $H2_V$) tests, calculate the air volume rate through the indoor coil as specified in sections 7.7.2.1 and 7.7.2.2 of ASHRAE Standard 37–2005 (incorporated by reference, see §430.22). When using the Outdoor Air Enthalpy Method, follow sections 7.7.2.1 and 7.7.2.2 to calculate the air volume rate through the outdoor coil. To express air volume rates in terms of standard air, use:

$$\overline{\dot{V}}_s = \frac{\overline{\dot{V}}_{mx}}{0.075\,\frac{lbm_{da}}{ft^3}\cdot v_n'\cdot\left[1+W_n\right]} = \frac{\overline{\dot{V}}_{mx}}{0.075\,\frac{lbm_{da}}{ft^3}\cdot v_n} \qquad (3\text{-}1)$$

where,

$\overline{\dot{V}}_s$ = air volume rate of standard (dry) air, $(ft^3/min)_{da}$

$\overline{\dot{V}}_{mx}$ = air volume rate of the air-water vapor mixture, $(ft^3/min)_{mx}$

v_n' = specific volume of air-water vapor mixture at the nozzle, ft^3 per lbm of the air-water vapor mixture

W_n = humidity ratio at the nozzle, lbm of water vapor per lbm of dry air

0.075 = the density associated with standard (dry) air, (lbm/ft^3)

v_n = specific volume of the dry air portion of the mixture evaluated at the dry-bulb temperature, vapor content, and barometric pressure existing at the nozzle, ft^3 per lbm of dry air.

(Note: In the first printing of ASHRAE Standard 37–2005, the second IP equation for Q_{mi} should read,

$$1097CA_n\sqrt{P_v v_n'}\ .)***$$

3.1.7 Test sequence. When testing a ducted unit (except if a heating-only heat pump), conduct the A or A_2 Test first to establish the Cooling Full-load Air Volume Rate. For ducted heat pumps where the Heating and Cooling Full-loadAir Volume Rates are different, make the first heating mode test one that requires the Heating Full-load Air Volume Rate. For ducted heating-only heat pumps, conduct the H1 or $H1_2$ Test first to establish the Heating Full-load Air Volume Rate. When conducting an optional cyclic test, always conduct it immediately after the steady-state test that requires the same test conditions. For variable-speed systems, the first test using the Cooling Minimum Air Volume Rate should precede the E_V Test if one expects to adjust the indoor fan control options when preparing for the first Minimum Air Volume Rate test. Under the same circumstances, the first test using the Heating Minimum Air Volume Rate should precede the $H2_V$ Test. The test laboratory makes all other decisions on the test sequence.

3.1.8 Requirement for the air temperature distribution leaving the indoor coil. For at least the first cooling mode test and the first heating mode test, monitor the temperature distribution of the air leaving the indoor coil using the grid of individual sensors described in sections 2.5 and 2.5.4. For the 30-minute data collection interval used to determine capacity, the maximum spread among the outlet dry bulb temperatures from any data sampling must not exceed 1.5 °F. Install the mixing devices described in section 2.5.4.2 to minimize the temperature spread.

3.1.9 Control of auxiliary resistive heating elements. Except as noted, disable heat pump resistance elements used for heating indoor air at all times, including during defrost cycles and if they are normally regulated by a heat comfort controller. For heat pumps equipped with a heat comfort controller, enable the heat pump resistance elements only during the below-described, short test. For single-speed heat pumps covered under section 3.6.1, the short test follows the H1 or, if conducted, the H1C Test. For two-capacity heat pumps and heat pumps covered under section 3.6.2, the short test follows the $H1_2$ Test. Set the heat comfort controller to provide the maximum supply air temperature. With the heat pump operating and while maintaining the Heating Full-loadAir Volume Rate, measure the temperature of the air leaving the indoor-side beginning 5 minutes after activating the heat comfort controller. Sample the outlet dry-bulb temperature at regular intervals that span 5 minutes or less. Collect data for 10 minutes, obtaining at least 3 samples. Calculate the average outlet temperature over the 10-minute interval, T_{CC}.

3.2 Cooling mode tests for different types of air conditioners and heat pumps.

3.2.1 Tests for a unit having a single-speed compressor that is tested with a fixed-speed indoor fan installed, with a constant-air-volume-rate indoor fan installed, or with no indoor fan installed. Conduct two steady-state wet coil tests, the A and B Tests. Use the two optional dry-coil tests, the steady-state C Test and the cyclic D Test, to determine the cooling mode cyclic degradation coefficient, C_D^c. If the two optional tests are conducted but yield a tested C_D^c that exceeds the default C_D^c or if the two optional tests are not conducted, assign C_D^c the default value of 0.25. Table 3 specifies test conditions for these four tests.

TABLE 3—COOLING MODE TEST CONDITIONS FOR UNITS HAVING A SINGLE-SPEED COMPRESSOR AND A FIXED-SPEED INDOOR FAN, A CONSTANT AIR VOLUME RATE INDOOR FAN, OR NO INDOOR FAN

Test description	Air entering indoor unit temperature (°F)		Air entering outdoor unit temperature (°F)		Cooling air volume rate
	Dry bulb	Wet bulb	Dry bulb	Wet bulb	
A Test—required (steady, wet coil)	80	67	95	[1] 75	Cooling full-load [2]
B Test—required (steady, wet coil)	80	67	82	[1] 65	Cooling full-load [2]
C Test—optional (steady, dry coil)	80	([3])	82	.....	Cooling full-load [2]
D Test—optional (cyclic, dry coil)	80	([3])	82	.....	([4])

[1] The specified test condition only applies if the unit rejects condensate to the outdoor coil.
[2] Defined in section 3.1.4.1.
[3] The entering air must have a low enough moisture content so no condensate forms on the indoor coil. (It is recommended that an indoor wet-bulb temperature of 57 °F or less be used.)
[4] Maintain the airflow nozzles static pressure difference or velocity pressure during the ON period at the same pressure difference or velocity pressure as measured during the C Test.

3.2.2 Tests for a unit having a single-speed compressor and a variable-speed variable-air-volume-rate indoor fan installed.

3.2.2.1 Indoor fan capacity modulation that correlates with the outdoor dry bulb temperature. Conduct four steady-state wet coil tests: The A_2, A_1 , B_2, and B_1 Tests. Use the two optional dry-coil tests, the steady-state C_1 Test and the cyclic D_1 Test, to determine the cooling mode cyclic degradation coefficient, C_D^c. If the two optional tests are conducted but yield a tested C_D^c that exceeds

the default C_D^c or if the two optional tests are not conducted, assign C_D^c the default value of 0.25

3.2.2.2 Indoor fan capacity modulation based on adjusting the sensible to total (S/T) cooling capacity ratio. The testing requirements are the same as specified in section 3.2.1 and Table 3. Use a Cooling Full-load Air Volume Rate that represents a normal residential installation. If performed, conduct the steady-state C Test and the cyclic D Test with the unit operating in the same S/T capacity control mode as used for the B Test.

TABLE 4—COOLING MODE TEST CONDITIONS FOR UNITS HAVING A SINGLE-SPEED COMPRESSOR AND A VARIABLE AIR VOLUME RATE INDOOR FAN THAT CORRELATES WITH THE OUTDOOR DRY BULB TEMPERATURE (SEC. 3.2.2.1)

Test description	Air entering indoor unit temperature (°F)		Air entering outdoor unit temperature (°F)		Cooling air volume rate
	Dry bulb	Wet bulb	Dry bulb	Wet bulb	
A_2 Test—required (steady, wet coil)	80	67	95	[1] 75	Cooling full-load [2]
A_1 Test—required (steady, wet coil)	80	67	95	[1] 75	Cooling minimum [3]
B_2 Test—required (steady, wet coil)	80	67	82	[1] 65	Cooling full-load [2]
B_1 Test—required (steady, wet coil)	80	67	82	[1] 65	Cooling minimum [3]
C_1 Test [4]—optional (steady, dry coil)	80	([4])	82	.....	Cooling minimum [3]
D_1 Test [4]—optional (cyclic, dry coil)	80	([4])	82	([5])	

[1] The specified test condition only applies if the unit rejects condensate to the outdoor coil.
[2] Defined in section 3.1.4.1.
[3] Defined in section 3.1.4.2.
[4] The entering air must have a low enough moisture content so no condensate forms on the indoor coil. (It is recommended that an indoor wet-bulb temperature of 57 °F or less be used.)
[5] Maintain the airflow nozzles static pressure difference or velocity pressure during the ON period at the same pressure difference or velocity pressure as measured during the C_1 Test.

3.2.3 Tests for a unit having a two-capacity compressor. (See Definition 1.45.) a. Conduct four steady-state wet coil tests: the A_2, B_2, B_1, and F_1 Tests. Use the two optional dry-coil tests, the steady-state C_1 Test and the cyclic D_1 Test, to determine the cooling-mode cyclic-degradation coefficient, C_D^c. If the two optional tests are conducted but yield a tested C_D^c that exceeds the default C_D^c or if the two optional tests are not conducted, assign C_D^c the default value of 0.25. Table 5 specifies test conditions for these six tests.

b. For units having a variable speed indoor fan that is modulated to adjust the sensible to total (S/T) cooling capacity ratio, use Cooling Full-load and Cooling Minimum Air Volume Rates that represent a normal residential installation. Additionally, if conducting the optional dry-coil tests, operate the unit in the same S/T capacity control mode as used for the B_1 Test.

c. Test two-capacity, northern heat pumps (see Definition 1.46) in the same way as a single speed heat pump with the unit operating exclusively at low compressor capacity (see section 3.2.1 and Table 3).

d. If a two-capacity air conditioner or heat pump locks out low-capacity operation at higher outdoor temperatures, then use the two optional dry-coil tests, the steady-state C_2 Test and the cyclic D_2 Test, to determine the cooling-mode cyclic-degradation coefficient that only applies to on/off cycling from high capacity, $C_D^c(k=2)$. If the two optional tests are conducted but yield a tested $C_D^c(k=2)$ that exceeds the default $C_D^c(k=2)$ or if the two optional tests are not conducted, assign $C_D^c(k=2)$ the default value. The default $C_D^c(k=2)$ is the same value as determined or assigned for the low-capacity cyclic-degradation coefficient, C_D^c [or equivalently, $C_D^c(k=1)$].

TABLE 5—COOLING MODE TEST CONDITIONS FOR UNITS HAVING A TWO-CAPACITY COMPRESSOR

Test description	Air entering indoor unit temperature (°F)		Air entering outdoor unit temperature (°F)		Compressor capacity	Cooling air volume rate
	Dry bulb	Wet bulb	Dry bulb	Wet bulb		
A_2 Test—required ..... (steady, wet coil)	80	67	95	[1] 75	High	Cooling Full-Load. [2]
B_2 Test—required ..... (steady, wet coil)	80	67	82	[1] 65	High	Cooling Full-Load. [2]
B_1 Test—required ..... (steady, wet coil)	80	67	82	[1] 65	Low	Cooling Minimum. [3]
C_2 Test—optional ..... (steady, dry-coil)	80	([4])	82	High	Cooling Full-Load. [2].	
D_2 Test—optional ..... (cyclic, dry-coil)	80	([4])	82	High	([5]).	

TABLE 5—COOLING MODE TEST CONDITIONS FOR UNITS HAVING A TWO-CAPACITY COMPRESSOR—Continued

Test description	Air entering indoor unit temperature (°F)		Air entering outdoor unit temperature (°F)		Compressor capacity	Cooling air volume rate
	Dry bulb	Wet bulb	Dry bulb	Wet bulb		
C_1 Test—optional (steady, dry-coil)	80	([4])	82	Low	Cooling Minimum.[3].	
D_1 Test—optional (cyclic, dry-coil)	80	([4])	82	Low	([6]).	
F_1 Test—required (steady, wet coil)	80	67	67	[1] 53.5	Low	Cooling Minimum.[3]

[1] The specified test condition only applies if the unit rejects condensate to the outdoor coil.
[2] Defined in section 3.1.4.1.
[3] Defined in section 3.1.4.2.
[4] The entering air must have a low enough moisture content so no condensate forms on the indoor coil. DOE recommends using an indoor air wet-bulb temperature of 57 °F or less.
[5] Maintain the airflow nozzle(s) static pressure difference or velocity pressure during the ON period at the same pressure or velocity as measured during the C_2 Test.
[6] Maintain the airflow nozzle(s) static pressure difference or velocity pressure during the ON period at the same pressure or velocity as measured during the C_1 Test.

3.2.4 Tests for a unit having a variable-speed compressor. a. Conduct five steady-state wet coil tests: The A_2, E_V, B_2, B_1, and F_1 Tests. Use the two optional dry-coil tests, the steady-state G_1 Test and the cyclic I_1 Test, to determine the cooling mode cyclic degradation coefficient, $C_D{}^c$. If the two optional tests are conducted but yield a tested $C_D{}^c$ that exceeds the default $C_D{}^c$ or if the two optional tests are not conducted, assign $C_D{}^c$ the default value of 0.25.Table 6 specifies test conditions for these seven tests. Determine the intermediate compressor speed cited in Table 6 using:

$$\text{Intermediate speed} = \text{Minimum speed} + \frac{\text{Maximum speed} - \text{Minimum speed}}{3}$$

where a tolerance of plus 5 percent or the next higher inverter frequency step from that calculated is allowed.

b. For units that modulate the indoor fan speed to adjust the sensible to total (S/T) cooling capacity ratio, use Cooling Full-load, Cooling Intermediate, and Cooling Minimum Air Volume Rates that represent a normal residential installation. Additionally, if conducting the optional dry-coil tests, operate the unit in the same S/T capacity control mode as used for the F_1 Test.

c. For multiple-split air conditioners and heat pumps (except where noted), the following procedures supersede the above requirements: For all Table 6 tests specified for a minimum compressor speed, at least one indoor unit must be turned off. The manufacturer shall designate the particular indoor unit(s) that is turned off. The manufacturer must also specify the compressor speed used for the Table 6 E_V Test, a cooling-mode intermediate compressor speed that falls within ¼ and ¾ of the difference between the maximum and minimum cooling-mode speeds. The manufacturer should prescribe an intermediate speed that is expected to yield the highest EER for the given E_V Test conditions and bracketed compressor speed range. The manufacturer can designate that one or more indoor units are turned off for the E_V Test.

TABLE 6—COOLING MODE TEST CONDITION FOR UNITS HAVING A VARIABLE-SPEED COMPRESSOR

Test description	Air entering indoor unit temperature (°F)		Air entering outdoor unit temperature (°F)		Compressor speed	Cooling air volume rate
	Dry bulb	Wet bulb	Dry bulb	Wet bulb		
A_2 Test—required (steady, wet coil)	80	67	95	[1] 75	Maximum	Cooling Full-Load[2]
B_2 Test—required (steady, wet coil)	80	67	82	[1] 65	Maximum	Cooling Full-Load[2]
E_V Test—required (steady, wet coil)	80	67	87	[1] 69	Intermediate	Cooling Intermediate[3]

TABLE 6—COOLING MODE TEST CONDITION FOR UNITS HAVING A VARIABLE-SPEED COMPRESSOR—Continued

Test description	Air entering indoor unit temperature (°F)		Air entering outdoor unit temperature (°F)		Compressor speed	Cooling air volume rate
	Dry bulb	Wet bulb	Dry bulb	Wet bulb		
B_1 Test—required (steady, wet coil)	80	67	82	[1] 65	Minimum	Cooling Minimum [4]
F_1 Test—required (steady, wet coil)	80	67	67	[1] 53.5	Minimum	Cooling Minimum [4]
G_1 Test [5]—optional (steady, dry-coil)	80	([6])	67	Minimum	Cooling Minimum [4].	
I_1 Test [5]—optional (cyclic, dry-coil)	80	([6])	67	Minimum	([6]).	

[1] The specified test condition only applies if the unit rejects condensate to the outdoor coil.
[2] Defined in section 3.1.4.1.
[3] Defined in section 3.1.4.3.
[4] Defined in section 3.1.4.2.
[5] The entering air must have a low enough moisture content so no condensate forms on the indoor coil. DOE recommends using an indoor air wet bulb temperature of 57 °F or less.
[6] Maintain the airflow nozzle(s) static pressure difference or velocity pressure during the ON period at the same pressure difference or velocity pressure as measured during the G_1 Test.

3.3 Test procedures for steady-state wet coil cooling mode tests (the A, A_2, A_1, B, B_2, B_1, E_V, and F_1 Tests). a. For the pretest interval, operate the test room reconditioning apparatus and the unit to be tested until maintaining equilibrium conditions for at least 30 minutes at the specified section 3.2 test conditions. Use the exhaust fan of the airflow measuring apparatus and, if installed, the indoor fan of the test unit to obtain and then maintain the indoor air volume rate and/or external static pressure specified for the particular test. Continuously record (see Definition 1.15):

(1) The dry-bulb temperature of the air entering the indoor coil,

(2) The water vapor content of the air entering the indoor coil,

(3) The dry-bulb temperature of the air entering the outdoor coil, and

(4) For the section 2.2.4 cases where its control is required, the water vapor content of the air entering the outdoor coil.

Refer to section 3.11 for additional requirements that depend on the selected secondary test method.

b. After satisfying the pretest equilibrium requirements, make the measurements specified in Table 3 of ASHRAE Standard 37–2005 (incorporated by reference, see §430.22) for the Indoor Air Enthalpy method and the user-selected secondary method. Except for external static pressure, make the Table 3 measurements at equal intervals that span 10 minutes or less. Measure external static pressure every 5 minutes or less. Continue data sampling until reaching a 30-minute period (*e.g.*, four consecutive 10-minute samples) where the test tolerances specified in Table 7 are satisfied. For those continuously recorded parameters, use the entire data set from the 30-minute interval to evaluate Table 7 compliance. Determine the average electrical power consumption of the air conditioner or heat pump over the same 30-minute interval.

c. Calculate indoor-side total cooling capacity as specified in sections 7.3.3.1 and 7.3.3.3 of ASHRAE Standard 37–2005 (incorporated by reference, see §430.22). Do not adjust the parameters used in calculating capacity for the permitted variations in test conditions. Evaluate air enthalpies based on the measured barometric pressure. Assign the average total space cooling capacity and electrical power consumption over the 30-minute data collection interval to the variables $\dot{Q}_c^k(T)$ and $\dot{E}_c^k(T)$, respectively. For these two variables, replace the ''T'' with the nominal outdoor temperature at which the test was conducted. The superscript k is used only when testing multi-capacity units. Use the superscript k=2 to denote a test with the unit operating at high capacity or maximum speed, k=1 to denote low capacity or minimum speed, and k=v to denote the intermediate speed.

d. For units tested without an indoor fan installed, decrease $\dot{Q}_c^k(T)$ by

$$\frac{1250\ \text{Btu/h}}{1000\ \text{scfm}} \cdot \overline{\dot{V}}_s,$$

and increase $\dot{E}_c^k(T)$ by,

$$\frac{365\ \text{W}}{1000\ \text{scfm}} \cdot \overline{\dot{V}}_s,$$

where $\overline{\dot{V}}_s$ is the average measured indoor air volume rate expressed in units of cubic feet per minute of standard air (scfm).

TABLE 7—TEST OPERATING AND TEST CONDITION TOLERANCES FOR SECTION 3.3 STEADY-STATE WET COIL COOLING MODE TESTS AND SECTION 3.4 DRY COIL COOLING MODE TESTS

	Test operating tolerance [1]	Test condition tolerance [2]
Indoor dry-bulb, °F		
Entering temperature	2.0	0.5
Leaving temperature	2.0	
Indoor wet-bulb, °F		
Entering temperature	1.0	[3] 0.3
Leaving temperature	[3] 1.0	
Outdoor dry-bulb, °F		
Entering temperature	2.0	0.5
Leaving temperature	[4] 2.0	
Outdoor wet-bulb, °F		
Entering temperature	1.0	[5] 0.3
Leaving temperature	[4] 1.0	
External resistance to airflow, inches of water	0.05	[6] 0.02
Electrical voltage, % of rdg.	2.0	1.5
Nozzle pressure drop, % of rdg.	2.0	

[1] See Definition 1.41.
[2] See Definition 1.40.
[3] Only applies during wet coil tests; does not apply during steady-state, dry coil cooling mode tests.
[4] Only applies when using the Outdoor Air Enthalpy Method.
[5] Only applies during wet coil cooling mode tests where the unit rejects condensate to the outdoor coil.
[6] Only applies when testing non-ducted units.

d. For air conditioners and heat pumps having a constant-air-volume-rate indoor fan, the five additional steps listed below are required if the average of the measured external static pressures exceeds the applicable sections 3.1.4 minimum (or target) external static pressure (ΔP_{min}) by 0.03 inches of water or more.

1. Measure the average power consumption of the indoor fan motor ($\dot{E}_{fan,1}$) and record the corresponding external static pressure (ΔP_1) during or immediately following the 30-minute interval used for determining capacity.

2. After completing the 30-minute interval and while maintaining the same test conditions, adjust the exhaust fan of the airflow measuring apparatus until the external static pressure increases to approximately $\Delta P_1 + (\Delta P_1 - \Delta P_{min})$.

3. After re-establishing steady readings of the fan motor power and external static pressure, determine average values for the indoor fan power ($\dot{E}_{fan,2}$) and the external static pressure (ΔP_2) by making measurements over a 5-minute interval.

4. Approximate the average power consumption of the indoor fan motor at ΔP_{min} using linear extrapolation:

$$\dot{E}_{fan,min} = \frac{\dot{E}_{fan,2} - \dot{E}_{fan,1}}{\Delta P_2 - \Delta P_1}\left(\Delta P_{min} - \Delta P_1\right) + \dot{E}_{fan,1}\,.$$

5. Increase the total space cooling capacity, $\dot{Q}_c^k(T)$, by the quantity ($\dot{E}_{fan,1} - \dot{E}_{fan,min}$), when expressed on a Btu/h basis. Decrease the total electrical power, $\dot{E}_c^k(T)$, by the same fan power difference, now expressed in watts.

3.4 Test procedures for the optional steady-state dry-coil cooling-mode tests (the C, C_1, C_2, and G_1 Tests).

a. Except for the modifications noted in this section, conduct the steady-state dry coil cooling mode tests as specified in section 3.3 for wet coil tests. Prior to recording data during the steady-state dry coil test, operate the unit at least one hour after achieving dry coil conditions. Drain the drain pan and plug the drain opening. Thereafter, the drain pan should remain completely dry.

b. Denote the resulting total space cooling capacity and electrical power derived from the test as $\dot{Q}_{ss,dry}$ and $\dot{E}_{ss,dry}$. With regard to a section 3.3 deviation, do not adjust $\dot{Q}_{ss,dry}$ for duct losses (i.e., do not apply section 7.3.3.3 of ASHRAE Standard 37–2005 (incorporated by reference, see §430.22)). In preparing for the section 3.5 cyclic tests, record the average indoor-side air volume rate, $\bar{V}$, specific heat of the air, Cp,a (expressed on dry air basis), specific volume of the air at the nozzles, v'_n, humidity ratio at the nozzles, W_n, and either pressure difference or velocity

pressure for the flow nozzles. For units having a variable-speed indoor fan (that provides either a constant or variable air volume rate) that will or may be tested during the cyclic dry coil cooling mode test with the indoor fan turned off (see section 3.5), include the electrical power used by the indoor fan motor among the recorded parameters from the 30-minute test.

3.5 Test procedures for the optional cyclic dry-coil cooling-mode tests (the D, D_1, D_2, and I_1 Tests). a. After completing the steady-state dry-coil test, remove the Outdoor Air Enthalpy method test apparatus, if connected, and begin manual OFF/ON cycling of the unit's compressor. The test set-up should otherwise be identical to the set-up used during the steady-state dry coil test. When testing heat pumps, leave the reversing valve during the compressor OFF cycles in the same position as used for the compressor ON cycles, unless automatically changed by the controls of the unit. For units having a variable-speed indoor fan, the manufacturer has the option of electing at the outset whether to conduct the cyclic test with the indoor fan enabled or disabled. Always revert to testing with the indoor fan disabled if cyclic testing with the fan enabled is unsuccessful.

b. For units having a single-speed or two-capacity compressor, cycle the compressor OFF for 24 minutes and then ON for 6 minutes ($\Delta\tau_{cyc,dry}$ = 0.5 hours). For units having a variable-speed compressor, cycle the compressor OFF for 48 minutes and then ON for 12 minutes ($\Delta\tau_{cyc,dry}$ = 1.0 hours). Repeat the OFF/ON compressor cycling pattern until the test is completed. Allow the controls of the unit to regulate cycling of the outdoor fan.

c. Sections 3.5.1 and 3.5.2 specify airflow requirements through the indoor coil of ducted and non-ducted systems, respectively. In all cases, use the exhaust fan of the airflow measuring apparatus (covered under section 2.6) along with the indoor fan of the unit, if installed and operating, to approximate a step response in the indoor coil airflow. Regulate the exhaust fan to quickly obtain and then maintain the flow nozzle static pressure difference or velocity pressure at the same value as was measured during the steady-state dry coil test. The pressure difference or velocity pressure should be within 2 percent of the value from the steady-state dry coil test within 15 seconds after airflow initiation. For units having a variable-speed indoor fan that ramps when cycling on and/or off, use the exhaust fan of the airflow measuring apparatus to impose a step response that begins at the initiation of ramp up and ends at the termination of ramp down.

d. For units having a variable-speed indoor fan, conduct the cyclic dry coil test using the pull-thru approach described below if any of the following occur when testing with the fan operating:

(1) The test unit automatically cycles off;

(2) Its blower motor reverses; or

(3) The unit operates for more than 30 seconds at an external static pressure that is 0.1 inches of water or more higher than the value measured during the prior steady-state test.

For the pull-thru approach, disable the indoor fan and use the exhaust fan of the airflow measuring apparatus to generate the specified flow nozzles static pressure difference or velocity pressure. If the exhaust fan cannot deliver the required pressure difference because of resistance created by the unpowered blower, temporarily remove the blower.

e. After completing a minimum of two complete compressor OFF/ON cycles, determine the overall cooling delivered and total electrical energy consumption during any subsequent data collection interval where the test tolerances given in Table 8 are satisfied. If available, use electric resistance heaters (see section 2.1) to minimize the variation in the inlet air temperature.

f. With regard to the Table 8 parameters, continuously record the dry-bulb temperature of the air entering the indoor and outdoor coils during periods when air flows through the respective coils. Sample the water vapor content of the indoor coil inlet air at least every 2 minutes during periods when air flows through the coil. Record external static pressure and the air volume rate indicator (either nozzle pressure difference or velocity pressure) at least every minute during the interval that air flows through the indoor coil. (These regular measurements of the airflow rate indicator are in addition to the required measurement at 15 seconds after flow initiation.) Sample the electrical voltage at least every 2 minutes beginning 30 seconds after compressor start-up. Continue until the compressor, the outdoor fan, and the indoor fan (if it is installed and operating) cycle off.

g. For ducted units, continuously record the dry-bulb temperature of the air entering (as noted above) and leaving the indoor coil. Or if using a thermopile, continuously record the difference between these two temperatures during the interval that air flows through the indoor coil. For non-ducted units, make the same dry-bulb temperature measurements beginning when the compressor cycles on and ending when indoor coil airflow ceases.

h. Integrate the electrical power over complete cycles of length $\Delta\tau_{cyc,dry}$. For ducted units tested with an indoor fan installed and operating, integrate electrical power from indoor fan OFF to indoor fan OFF. For all other ducted units and for non-ducted units, integrate electrical power from compressor OFF to compressor OFF. (Some cyclic tests will use the same data collection intervals to determine the electrical energy and the total

space cooling. For other units, terminate data collection used to determine the electrical energy before terminating data collection used to determine total space cooling.)

TABLE 8—TEST OPERATING AND TEST CONDITION TOLERANCES FOR CYCLIC DRY COIL COOLING MODE TESTS

	Test Operating Tolerance [1]	Test Condition Tolerance [2]
Indoor entering dry-bulb temperature [3], °F	2.0	0.5
Indoor entering wet-bulb temperature, °F	.....	([4])
Outdoor entering dry-bulb temperature [3], °F	2.0	0.5
External resistance to airflow [3], inches of water	0.05	
Airflow nozzle pressure difference or velocity pressure [3], % of reading	2.0	[5] 2.0
Electrical voltage [6], % of rdg.	2.0	1.5

[1] See Definition 1.41.
[2] See Definition 1.40.
[3] Applies during the interval that air flows through the indoor (outdoor) coil except for the first 30 seconds after flow initiation. For units having a variable-speed indoor fan that ramps, the tolerances listed for the external resistance to airflow apply from 30 seconds after achieving full speed until ramp down begins.
[4] Shall at no time exceed a wet-bulb temperature that results in condensate forming on the indoor coil.
[5] The test condition shall be the average nozzle pressure difference or velocity pressure measured during the steady-state dry coil test.
[6] Applies during the interval when at least one of the following—the compressor, the outdoor fan, or, if applicable, the indoor fan—are operating except for the first 30 seconds after compressor start-up.

i. If the Table 8 tolerances are satisfied over the complete cycle, record the measured electrical energy consumption as $e_{cyc,dry}$ and express it in units of watt-hours. Calculate the total space cooling delivered, $q_{cyc,dry}$, in units of Btu using,

$$q_{cyc,dry} = \frac{60 \cdot \overline{\dot{V}} \cdot C_{p,a} \cdot \Gamma}{\left[v'_n \cdot \left(1 + W_n\right)\right]} = \frac{60 \cdot \overline{\dot{V}} \cdot C_{p,a} \cdot \Gamma}{v_n} \qquad (3.5\text{-}1)$$

where $\overline{\dot{V}}$, $C_{p,a}$, v_n' (or v_n), and W_n are the values recorded during the section 3.4 dry coil steady-state test and,

$$\Gamma = \int_{\tau_1}^{\tau_2} \left[T_{al}(\tau) - T_{a2}(\tau)\right] d\tau\ ,\ \text{hr} \cdot {}^\circ\text{F}.$$

$T_{al}(\tau)$ = dry bulb temperature of the air entering the indoor coil at time τ, °F.

$T_{a2}(\tau)$ = dry bulb temperature of the air leaving the indoor coil at time τ, °F.

τ_1 = for ducted units, the elapsed time when airflow is initiated through the indoor coil; for non-ducted units, the elapsed time when the compressor is cycled on, hr.

τ_2 = the elapsed time when indoor coil airflow ceases, hr.

3.5.1 Procedures when testing ducted systems. The automatic controls that are normally installed with the test unit must govern the OFF/ON cycling of the air moving equipment on the indoor side (exhaust fan of the airflow measuring apparatus and, if installed, the indoor fan of the test unit). For example, for ducted units tested without an indoor fan installed but rated based on using a fan time delay relay, control the indoor coil airflow according to the rated ON and/or OFF delays provided by the relay. For ducted units having a variable-speed indoor fan that has been disabled (and possibly removed), start and stop the indoor airflow at the same instances as if the fan were enabled. For all other ducted units tested without an indoor fan installed, cycle the indoor coil airflow in unison with the cycling of the compressor. Close air dampers on the inlet (section 2.5.1) and outlet side (sections 2.5 and 2.5.4) during the OFF period. Airflow through the indoor coil should stop within 3 seconds after the automatic controls of the test unit (act to) de-energize the indoor fan. For ducted units tested without an indoor fan installed (excluding the special case where a variable-speed fan is temporarily removed), increase $e_{cyc,dry}$ by the quantity,

$$\frac{365\ \text{W}}{1000\ \text{scfm}} \cdot \overline{\dot{V}}_s \cdot \left[\tau_2 - \tau_1\right], \qquad (3.5\text{-}2)$$

and decrease $q_{cyc,dry}$ by,

$$\frac{1250\ \text{Btu/h}}{1000\ \text{scfm}} \cdot \overline{\dot{V}}_s \cdot \left[\tau_2 - \tau_1\right], \qquad (3.5\text{-}3)$$

where $\overline{\dot{V}}_s$ is the average indoor air volume rate from the section 3.4 dry coil steady-state test and is expressed in units of cubic feet per minute of standard air (scfm). For units having a variable-speed indoor fan that is disabled during the cyclic test, increase $e_{cyc,dry}$ and decrease $q_{cyc,dry}$ based on:

a. The product of $[\tau_2 - \tau_1]$ and the indoor fan power measured during or following the dry coil steady-state test; or,

b. The following algorithm if the indoor fan ramps its speed when cycling.

1. Measure the electrical power consumed by the variable-speed indoor fan at a minimum of three operating conditions: at the speed/air volume rate/external static pressure that was measured during the steady-state test, at operating conditions associated with the midpoint of the ramp-up interval,

and at conditions associated with the midpoint of the ramp-down interval. For these measurements, the tolerances on the airflow volume or the external static pressure are the same as required for the section 3.4 steady-state test.

2. For each case, determine the fan power from measurements made over a minimum of 5 minutes.

3. Approximate the electrical energy consumption of the indoor fan if it had operated during the cyclic test using all three power measurements. Assume a linear profile during the ramp intervals. The manufacturer must provide the durations of the ramp-up and ramp-down intervals. If a manufacturer-supplied ramp interval exceeds 45 seconds, use a 45-second ramp interval nonetheless when estimating the fan energy.

The manufacturer is allowed to choose option a, and forego the extra testing burden of option b, even if the unit ramps indoor fan speed when cycling.

3.5.2 Procedures when testing non-ducted systems. Do not use air dampers when conducting cyclic tests on non-ducted units. Until the last OFF/ON compressor cycle, airflow through the indoor coil must cycle off and on in unison with the compressor. For the last OFF/ON compressor cycle—the one used to determine $e_{cyc,dry}$ and $q_{cyc,dry}$—use the exhaust fan of the airflow measuring apparatus and the indoor fan of the test unit to have indoor airflow start 3 minutes prior to compressor cut-on and end three minutes after compressor cutoff. Subtract the electrical energy used by the indoor fan during the 3 minutes prior to compressor cut-on from the integrated electrical energy, $e_{cyc,dry}$. Add the electrical energy used by the indoor fan during the 3 minutes after compressor cutoff to the integrated cooling capacity, $q_{cyc,dry}$. For the case where the non-ducted unit uses a variable-speed indoor fan which is disabled during the cyclic test, correct $e_{cyc,dry}$ and $q_{cyc,dry}$ using the same approach as prescribed in section 3.5.1 for ducted units having a disabled variable-speed indoor fan.

3.5.3 Cooling-mode cyclic-degradation coefficient calculation. Use the two optional dry-coil tests to determine the cooling-mode cyclic-degradation coefficient, C_D^c. Append ''(k=2)'' to the coefficient if it corresponds to a two-capacity unit cycling at high capacity. If the two optional tests are conducted but yield a tested C_D^c that exceeds the default C_D^c or if the two optional tests are not conducted, assign C_D^c the default value of 0.25. The default value for two-capacity units cycling at high capacity, however, is the low-capacity coefficient, i.e., $C_D^c(k=2) = C_D^c$. Evaluate C_D^c using the above results and those from the section 3.4 dry-coil steady-state test.

$$C_D^c = \frac{1 - \frac{EER_{cyc,dry}}{EER_{ss,dry}}}{1 - CLF}$$

where,

$$EER_{cyc,dry} = \frac{q_{cyc,dry}}{e_{cyc,dry}},$$

the average energy efficiency ratio during the cyclic dry coil cooling mode test, Btu/W·h

$$EER_{ss,dry} = \frac{\dot{Q}_{ss,dry}}{\dot{E}_{ss,dry}},$$

the average energy efficiency ratio during the steady-state dry coil cooling mode test, Btu/W·h

$$CLF = \frac{q_{cyc,dry}}{Q_{ss,dry} \cdot \Delta\tau_{cyc,dry}},$$

the cooling load factor dimensionless.

Round the calculated value for C_D^c to the nearest 0.01. If C_D^c is negative, then set it equal to zero.

3.6 Heating mode tests for different types of heat pumps, including heating-only heat pumps.

3.6.1 Tests for a heat pump having a single-speed compressor that is tested with a fixed speed indoor fan installed, with a constant-air-volume-rate indoor fan installed, or with no indoor fan installed. Conduct the optional High Temperature Cyclic (H1C) Test to determine the heating mode cyclic-degradation coefficient, C_D^h. If this optional test is conducted but yields a tested C_D^h that exceeds the default C_D^h or if the optional test is not conducted, assign C_D^h the default value of 0.25. Test conditions for the four tests are specified in Table 9.

TABLE 9—HEATING MODE TEST CONDITIONS FOR UNITS HAVING A SINGLE-SPEED COMPRESSOR AND A FIXED-SPEED INDOOR FAN, A CONSTANT AIR VOLUME RATE INDOOR FAN, OR NO INDOOR FAN

Test description	Air entering indoor unit Temperature (°F)		Air entering outdoor unit Temperature (°F)		Heating air volume rate
	Dry bulb	Wet bulb	Dry bulb	Wet bulb	
H1 Test (required, steady)	70	60(max)	47	43	Heating Full-load [1]
H1C Test (optional, cyclic)	70	60(max)	47	43	([2])
H2 Test (required)	70	60(max)	35	33	Heating Full-load [1]

TABLE 9—HEATING MODE TEST CONDITIONS FOR UNITS HAVING A SINGLE-SPEED COMPRESSOR AND A FIXED-SPEED INDOOR FAN, A CONSTANT AIR VOLUME RATE INDOOR FAN, OR NO INDOOR FAN—Continued

Test description	Air entering indoor unit Temperature (°F)		Air entering outdoor unit Temperature (°F)		Heating air volume rate
	Dry bulb	Wet bulb	Dry bulb	Wet bulb	
H3 Test (required, steady)	70	60(max)	17	15	Heating Full-load [1]

[1] Defined in section 3.1.4.4.
[2] Maintain the airflow nozzles static pressure difference or velocity pressure during the ON period at the same pressure difference or velocity pressure as measured during the H1 Test.

3.6.2 Tests for a heat pump having a single-speed compressor and a variable-speed, variable-air-volume-rate indoor fan: capacity modulation correlates with outdoor dry bulb temperature. Conduct five tests: two High Temperature Tests ($H1_2$ and $H1_1$), one Frost Accumulation Test ($H2_2$), and two Low Temperature Tests ($H3_2$ and $H3_1$). Conducting an additional Frost Accumulation Test ($H2_1$) is optional. Conduct the optional High Temperature Cyclic ($H1C_1$) Test to determine the heating mode cyclic-degradation coefficient, C_D^h. If this optional test is conducted but yields a tested C_D^h that exceeds the default C_D^h or if the optional test is not conducted, assign C_D^h the default value of 0.25. Test conditions for the seven tests are specified in Table 10. If the optional $H2_1$ Test is not performed, use the following equations to approximate the capacity and electrical power of the heat pump at the $H2_1$ test conditions:

$$\dot{Q}_h^{k=1}(35) = QR_h^{k=2}(35)\cdot\left\{\dot{Q}_h^{k=1}(17) + 0.6\cdot\left[\dot{Q}_h^{k=1}(47) - \dot{Q}_h^{k=1}(17)\right]\right\}$$

$$\dot{E}_h^{k=1}(35) = PR_h^{k=2}(35)\cdot\left\{\dot{E}_h^{k=1}(17) + 0.6\cdot\left[\dot{E}_h^{k=1}(47) - \dot{E}_h^{k=1}(17)\right]\right\}$$

where,

$$\dot{Q}R_h^{k=2}(35) = \frac{\dot{Q}_h^{k=2}(35)}{\dot{Q}^{k=2}(17) + 0.6\cdot\left[\dot{Q}_h^{k=2}(47) - \dot{Q}_h^{k=2}(17)\right]}$$

$$PR_h^{k=2}(35) = \frac{\dot{E}_h^{k=2}(35)}{\dot{E}_h^{k=2}(17) + 0.6\cdot\left[\dot{E}_h^{k=2}(47) - \dot{E}_h^{k=2}(17)\right]}.$$

The quantities $\dot{Q}_h^{k=2}(47)$, $\dot{E}_h^{k=2}(47)$, $\dot{Q}_h^{k=1}(47)$, and $\dot{E}_h^{k=1}(47)$ are determined from the $H1_2$ and $H1_1$ Tests and evaluated as specified in section 3.7; the quantities $\dot{Q}_h^{k=2}(35)$ and $\dot{E}_h^{k=2}(35)$ are determined from the $H2_2$ Test and evaluated as specified in section 3.9; and the quantities $\dot{Q}_h^{k=2}(17)$, $\dot{E}_h^{k=2}(17)$, $\dot{Q}_h^{k=1}(17)$, and $\dot{E}_h^{k=1}(17)$, are determined from the $H3_2$ and $H3_1$ Tests and evaluated as specified in section 3.10.

TABLE 10—HEATING MODE TEST CONDITIONS FOR UNITS HAVING A SINGLE-SPEED COMPRESSOR AND A VARIABLE AIR VOLUME RATE INDOOR FAN

Test description	Air entering indoor unit temperature (°F)		Air entering outdoor unit temperature (°F)		Heating air volume rate
	Dry bulb	Wet bulb	Dry bulb	Wet bulb	
$H1_2$ Test (required, steady) ..	70	60(max)	47	43	Heating Full-load. [1]
$H1_1$ Test (required, steady) ..	70	60(max)	47	43	Heating Minimum. [2]
$H1C_1$ Test (optional, cyclic)	70	60(max)	47	43	([3])
$H2_2$ Test (required)	70	60(max)	35	33	Heating Full-load. [1]

TABLE 10—HEATING MODE TEST CONDITIONS FOR UNITS HAVING A SINGLE-SPEED COMPRESSOR AND A VARIABLE AIR VOLUME RATE INDOOR FAN—Continued

Test description	Air entering indoor unit temperature (°F)		Air entering outdoor unit temperature (°F)		Heating air volume rate
	Dry bulb	Wet bulb	Dry bulb	Wet bulb	
$H2_1$ Test (optional)	70	$60^{(max)}$	35	33	Heating Minimum.[2]
$H3_2$ Test (required, steady)	70	$60^{(max)}$	17	15	Heating Full-load.[1]
$H3_1$ Test (required, steady)	70	$60^{(max)}$	17	15	Heating Minimum.[2]

[1] Defined in section 3.1.4.4.
[2] Defined in section 3.1.4.5.
[3] Maintain the airflow nozzles static pressure difference or velocity pressure during the ON period at the same pressure difference or velocity pressure as measured during the $H1_1$ Test.

3.6.3 Tests for a heat pump having a two-capacity compressor (see Definition 1.45), including two-capacity, northern heat pumps (see Definition 1.46). a. Conduct one Maximum Temperature Test ($H0_1$), two High Temperature Tests ($H1_2$ and $H1_1$), one Frost Accumulation Test ($H2_2$), and one Low Temperature Test ($H3_2$). Conduct an additional Frost Accumulation Test ($H2_1$) and Low Temperature Test ($H3_1$) if both of the following conditions exist:

1. Knowledge of the heat pump's capacity and electrical power at low compressor capacity for outdoor temperatures of 37 °F and less is needed to complete the section 4.2.3 seasonal performance calculations; and

2.The heat pump's controls allow low-capacity operation at outdoor temperatures of 37 °F and less.

If the above two conditions are met, an alternative to conducting the $H2_1$ Frost Accumulation is to use the following equations to approximate the capacity and electrical power:

$$\dot{Q}_h^{k=1}(35) = 0.90 \cdot \left\{ \dot{Q}_h^{k=1}(17) + 0.6 \cdot \left[\dot{Q}_h^{k=1}(47) - \dot{Q}_h^{k=1}(17) \right] \right\}$$

$$\dot{E}_h^{k=1}(35) = 0.985 \cdot \left\{ \dot{E}_h^{k=1}(17) + 0.6 \cdot \left[\dot{E}_h^{k=1}(47) - \dot{E}_h^{k=1}(17) \right] \right\}$$

Determine the quantities $\dot{Q}_h^{k=1}$ (47) and $\dot{E}_h^{k=1}$ (47) from the $H1_1$ Test and evaluate them according to Section 3.7. Determine the quantities $\dot{Q}_h^{k=1}$ (17) and $\dot{E}_h^{k=1}$ (17) from the $H3_1$ Test and evaluate them according to Section 3.10.

b. Conduct the optional High Temperature Cyclic Test ($H1C_1$) to determine the heating-mode cyclic-degradation coefficient, C_D^h. If this optional test is conducted but yields a tested C_D^h that exceeds the default C_D^h or if the optional test is not conducted, assign C_D^h the default value of 0.25. If a two-capacity heat pump locks out low capacity operation at lower outdoor temperatures, conduct the optional High Temperature Cyclic Test ($H1C_2$) to determine the high-capacity heating-mode cyclic-degradation coefficient, C_D^h (k=2). If this optional test at high capacity is conducted but yields a tested C_D^h (k=2) that exceeds the default C_D^h (k=2) or if the optional test is not conducted, assign C_D^h the default value. The default C_D^h (k=2) is the same value as determined or assigned for the low-capacity cyclic-degradation coefficient, C_D^h [or equivalently, C_D^h (k=1)]. Table 11 specifies test conditions for these nine tests.

TABLE 11—HEATING MODE TEST CONDITIONS FOR UNITS HAVING A TWO-CAPACITY COMPRESSOR

Test description	Air entering indoor unit temperature (°F)		Air entering outdoor unit temperature (°F)		Compressor capacity	Heating air volume rate
	Dry bulb	Wet bulb	Dry bulb	Wet bulb		
$H0_1$ Test (required, steady)	70	$60^{(max)}$	62	56.5	Low	Heating Minimum.[1]
$H1_2$ Test (required, steady)	70	$60^{(max)}$	47	43	High	Heating Full-Load.[2]
$H1C_2$ Test (optional, cyclic)	70	$60^{(max)}$	47	43	High	([3])
$H1_1$ Test (required)	70	$60^{(max)}$	47	43	Low	Heating Minimum.[1]

TABLE 11—HEATING MODE TEST CONDITIONS FOR UNITS HAVING A TWO-CAPACITY COMPRESSOR—Continued

Test description	Air entering indoor unit temperature (°F)		Air entering outdoor unit temperature (°F)		Compressor capacity	Heating air volume rate
	Dry bulb	Wet bulb	Dry bulb	Wet bulb		
H1C$_1$ Test (optional, cyclic)	70	60(max)	47	43	Low	(4)
H2$_2$ Test (required)	70	60(max)	35	33	High	Heating Full-Load.[2]
H2$_1$ Test[5 6] (required)	70	60(max)	35	33	Low	Heating Minimum.[1]
H3$_2$ Test (required, steady)	70	60(max)	17	15	High	Heating Full-Load.[2]
H3$_1$ Test[5] (required, steady)	70	60(max)	17	15	Low	Heating Minimum.[1]

[1] Defined in section 3.1.4.5.
[2] Defined in section 3.1.4.4.
[3] Maintain the airflow nozzle(s) static pressure difference or velocity pressure during the ON period at the same pressure or velocity as measured during the *H1*$_2$ Test.
[4] Maintain the airflow nozzle(s) static pressure difference or velocity pressure during the ON period at the same pressure or velocity as measured during the *H1*$_1$ Test.
[5] Required only if the heat pump's performance when operating at low compressor capacity and outdoor temperatures less than 37 °F is needed to complete the section 4.2.3 *HSPF* calculations.
[6] If table note #5 applies, the section 3.6.3 equations for $\dot{Q}_h^{k=1}$ (35) and $\dot{E}_h^{k=1}$ (17) may be used in lieu of conducting the H2$_1$ Test.

3.6.4 Tests for a heat pump having a variable-speed compressor. a. Conduct one Maximum Temperature Test (H0$_1$), two High Temperature Tests (H1$_2$ and H1$_1$), one Frost Accumulation Test (H2$_V$), and one Low Temperature Test (H3$_2$). Conducting one or both of the following tests is optional: An additional High Temperature Test (H1$_N$) and an additional Frost Accumulation Test (H2$_2$). Conduct the optional Maximum Temperature Cyclic (H0C$_1$) Test to determine the heating mode cyclic-degradation coefficient, C_D^h. If this optional test is conducted but yields a tested C_D^h that exceeds the default C_D^h or if the optional test is not conducted, assign C_D^h the default value of 0.25. Test conditions for the eight tests are specified in Table 12. Determine the intermediate compressor speed cited in Table 12 using the heating mode maximum and minimum compressors speeds and:

$$\text{Intermediate speed} = \text{Minimum speed} + \frac{\text{Maximum speed} - \text{Minimum speed}}{3}$$

where a tolerance of plus 5 percent or the next higher inverter frequency step from that calculated is allowed. If the H2$_2$ Test is not done, use the following equations to approximate the capacity and electrical power at the H2$_2$ test conditions:

$$\dot{Q}_h^{k=2}(35) = 0.90 \cdot \left\{\dot{Q}_h^{k=2}(17) + 0.6 \cdot \left[\dot{Q}_h^{k=2}(47) - \dot{Q}_h^{k=2}(17)\right]\right\}$$

$$\dot{E}_h^{k=2}(35) = 0.985 \cdot \left\{\dot{E}_h^{k=2}(17) + 0.6 \cdot \left[\dot{E}_h^{k=2}(47) - \dot{E}_h^{k=2}(17)\right]\right\}.$$

b. Determine the quantities $\dot{Q}_h^{k=2}(47)$ and from $\dot{E}_h^{k=2}(47)$ from the H1$_2$ Test and evaluate them according to section 3.7. Determine the quantities $\dot{Q}_h^{k=2}(17)$ and $\dot{E}_h^{k=2}(17)$ from the H3$_2$ Test and evaluate them according to section 3.10. For heat pumps where the heating mode maximum compressor speed exceeds its cooling mode maximum compressor speed, conduct the H1$_N$ Test if the manufacturer requests it. If the H1$_N$ Test is done, operate the heat pump's compressor at the same speed as the speed used for the cooling mode A$_2$ Test. Refer to the last sentence of section 4.2 to see how the results of the H1$_N$ Test may be

used in calculating the heating seasonal performance factor.

TABLE 12—HEATING MODE TEST CONDITIONS FOR UNITS HAVING A VARIABLE-SPEED COMPRESSOR

Test description	Air entering indoor unit temperature (°F)		Air entering outdoor unit temperature (°F)		Compressor speed	Heating air volume rate
	Dry bulb	Wet bulb	Dry bulb	Wet bulb		
$H0_1$ Test (required, steady)	70	60(max)	62	56.5	Minimum	Heating Minimum.[1]
$H0C_1$ Test (optional, steady)	70	60(max)	62	56.5	Minimum	([2])
$H1_2$ Test (required, steady)	70	60(max)	47	43	Maximum	Heating Full-Load.[3]
$H1_1$ Test (required, steady)	70	60(max)	47	43	Minimum	Heating Minimum.[1]
$H1_N$ Test (optional, steady)	70	60(max)	47	43	Cooling Mode Maximum.	Heating Nominal.[4]
$H2_2$ Test (optional)	70	60(max)	35	33	Maximum	Heating Full-Load.[3]
$H2_V$ Test (required)	70	60(max)	35	33	Intermediate	Heating Intermediate.[5]
$H3_2$ Test (required, steady)	70	60(max)	17	15	Maximum	Heating Full-Load.[3]

[1] Defined in section 3.1.4.5.
[2] Maintain the airflow nozzle(s) static pressure difference or velocity pressure during an ON period at the same pressure or velocity as measured during the $H0_1$ Test.
[3] Defined in section 3.1.4.4.
[4] Defined in section 3.1.4.7.
[5] Defined in section 3.1.4.6.

c. For multiple-split heat pumps (only), the following procedures supersede the above requirements. For all Table 12 tests specified for a minimum compressor speed, at least one indoor unit must be turned off. The manufacturer shall designate the particular indoor unit(s) that is turned off. The manufacturer must also specify the compressor speed used for the Table 12 $H2_V$ Test, a heating-mode intermediate compressor speed that falls within ¼ and ¾ of the difference between the maximum and minimum heating-mode speeds. The manufacturer should prescribe an intermediate speed that is expected to yield the highest COP for the given $H2_V$ Test conditions and bracketed compressor speed range. The manufacturer can designate that one or more specific indoor units are turned off for the $H2_V$ Test.

3.6.5 Additional test for a heat pump having a heat comfort controller. Test any heat pump that has a heat comfort controller (see Definition 1.28) according to section 3.6.1, 3.6.2, or 3.6.3, whichever applies, with the heat comfort controller disabled. Additionally, conduct the abbreviated test described in section 3.1.9 with the heat comfort controller active to determine the system's maximum supply air temperature. (Note: heat pumps having a variable speed compressor and a heat comfort controller are not covered in the test procedure at this time.)

3.7 Test procedures for steady-state Maximum Temperature and High Temperature heating mode tests (the $H0_1$, H1, $H1_2$, $H1_1$, and $H1_N$ Tests). a. For the pretest interval, operate the test room reconditioning apparatus and the heat pump until equilibrium conditions are maintained for at least 30 minutes at the specified section 3.6 test conditions. Use the exhaust fan of the airflow measuring apparatus and, if installed, the indoor fan of the heat pump to obtain and then maintain the indoor air volume rate and/or the external static pressure specified for the particular test. Continuously record the dry-bulb temperature of the air entering the indoor coil, and the dry-bulb temperature and water vapor content of the air entering the outdoor coil. Refer to section 3.11 for additional requirements that depend on the selected secondary test method. After satisfying the pretest equilibrium requirements, make the measurements specified in Table 3 of ASHRAE Standard 37–2005 (incorporated by reference, see § 430.22) for the Indoor Air Enthalpy method and the user-selected secondary method. Except for external static pressure, make the Table 3 measurements at equal intervals that span 10 minutes or less. Measure external static pressure every 5 minutes or less. Continue data sampling until a 30-minute period (*e.g.*, four consecutive 10-minute samples) is reached where the test tolerances specified in Table 13 are satisfied. For those continuously recorded parameters, use the entire data set for the 30-minute interval when evaluating Table 13 compliance. Determine the average electrical power consumption of the heat pump over the same 30-minute interval.

TABLE 13—TEST OPERATING AND TEST CONDITION TOLERANCES FOR SECTION 3.7 AND SECTION 3.10 STEADY-STATE HEATING MODE TESTS

	Test operating tolerance [1]	Test condition tolerance [2]
Indoor dry-bulb, °F:		
Entering temperature	2.0	0.5
Leaving temperature	2.0	
Indoor wet-bulb, °F:		
Entering temperature	1.0	
Leaving temperature	1.0	
Outdoor dry-bulb, °F:		
Entering temperature	2.0	0.5
Leaving temperature	[2] 2.0	
Outdoor wet-bulb, °F:		
Entering temperature	1.0	0.3
Leaving temperature	[3] 1.0	
External resistance to airflow, inches of water	0.05	[4] 0.02
Electrical voltage, % of rdg	2.0	1.5
Nozzle pressure drop, % of rdg	2.0	

[1] See Definition 1.41.
[2] See Definition 1.40.
[3] Only applies when the Outdoor Air Enthalpy Method is used.
[4] Only applies when testing non-ducted units.

b. Calculate indoor-side total heating capacity as specified in sections 7.3.4.1 and 7.3.4.3 of ASHRAE Standard 37–2005 (incorporated by reference, see §430.22). Do not adjust the parameters used in calculating capacity for the permitted variations in test conditions. Assign the average space heating capacity and electrical power over the 30-minute data collection interval to the variables $\dot{Q}_h^k$ and $\dot{E}_h^k(T)$ respectively. The ''T'' and superscripted ''k'' are the same as described in section 3.3. Additionally, for the heating mode, use the superscript to denote results from the optional $H1_N$ Test, if conducted.

c. For heat pumps tested without an indoor fan installed, increase $\dot{Q}_h^k(T)$ by

$$\frac{1250\ \text{Btu/h}}{1000\ \text{scfm}} \cdot \overline{\dot{V}}_s,$$

and increase $\dot{E}_h^k(T)$ by,

$$\frac{365\ \text{W}}{1000\ \text{scfm}} \cdot \overline{\dot{V}}_s,$$

where $\overline{\dot{V}}_s$ is the average measured indoor air volume rate expressed in units of cubic feet per minute of standard air (scfm). During the 30-minute data collection interval of a High Temperature Test, pay attention to preventing a defrost cycle. Prior to this time, allow the heat pump to perform a defrost cycle if automatically initiated by its own controls. As in all cases, wait for the heat pump's defrost controls to automatically terminate the defrost cycle. Heat pumps that undergo a defrost should operate in the heating mode for at least 10 minutes after defrost termination prior to beginning the 30-minute data collection interval. For some heat pumps, frost may accumulate on the outdoor coil during a High Temperature test. If the indoor coil leaving air temperature or the difference between the leaving and entering air temperatures decreases by more than 1.5 °F over the 30-minute data collection interval, then do not use the collected data to determine capacity. Instead, initiate a defrost cycle. Begin collecting data no sooner than 10 minutes after defrost termination. Collect 30 minutes of new data during which the Table 13 test tolerances are satisfied. In this case, use only the results from the second 30-minute data collection interval to evaluate $\dot{Q}_h^k(47)$ and $\dot{E}_h^k(47)$.

d. If conducting the optional cyclic heating mode test, which is described in section 3.8, record the average indoor-side air volume rate, $\overline{\dot{V}}$, specific heat of the air, $C_{p,a}$ (expressed on dry air basis), specific volume of the air at the nozzles, v_n' (or v_n), humidity ratio at the nozzles, W_n, and either pressure difference or velocity pressure for the flow nozzles. If either or both of the below criteria apply, determine the average, steady-state, electrical power consumption of the indoor fan motor ($\dot{E}_{fan,1}$):

1. The section 3.8 cyclic test will be conducted and the heat pump has a variable-speed indoor fan that is expected to be disabled during the cyclic test; or

2. The heat pump has a (variable-speed) constant-air volume-rate indoor fan and during the steady-state test the average external static pressure (ΔP_1) exceeds the applicable section 3.1.4.4 minimum (or targeted) external static pressure (ΔP_{min}) by 0.03 inches of water or more.

Determine $\dot{E}_{fan,1}$ by making measurements during the 30-minute data collection interval, or immediately following the test and prior to changing the test conditions. When the above ''2'' criteria applies, conduct the following four steps after determining $\dot{E}_{fan,1}$ (which corresponds to ΔP_1):

i. While maintaining the same test conditions, adjust the exhaust fan of the airflow measuring apparatus until the external static pressure increases to approximately $\Delta P_1 + (\Delta P_1 - \Delta P_{min})$.

ii. After re-establishing steady readings for fan motor power and external static pressure, determine average values for the indoor fan power ($\dot{E}_{fan,2}$) and the external static pressure (ΔP_2) by making measurements over a 5-minute interval.

iii. Approximate the average power consumption of the indoor fan motor if the 30-minute test had been conducted at ΔP_{min} using linear extrapolation:

$$\dot{E}_{fan,min} = \frac{\dot{E}_{fan,2} - \dot{E}_{fan,1}}{\Delta P_2 - \Delta P_1}\left(\Delta P_{min} - \Delta P_1\right) + \dot{E}_{fan,1}.$$

iv. Decrease the total space heating capacity, $\dot{Q}_h^k(T)$, by the quantity ($\dot{E}_{fan,1} - \dot{E}_{fan,min}$), when expressed on a Btu/h basis. Decrease the total electrical power, $\dot{E}_h^k(T)$ by the same fan power difference, now expressed in watts.

3.8 Test procedures for the optional cyclic heating mode tests (the $H0C_1$, H1C, $H1C_1$ and $H1C_2$ Tests). a. Except as noted below, conduct the cyclic heating mode test as specified in section 3.5. As adapted to the heating mode, replace section 3.5 references to ''the steady-state dry coil test'' with ''the heating mode steady-state test conducted at the same test conditions as the cyclic heating mode test.'' Use the test tolerances in Table 14 rather than Table 8. Record the outdoor coil entering wet-bulb temperature according to the requirements given in section 3.5 for the outdoor coil entering dry-bulb temperature. Drop the subscript ''dry'' used in variables cited in section 3.5 when referring to quantities from the cyclic heating mode test. Determine the total space heating delivered during the cyclic heating test, q_{cyc}, as specified in section 3.5 except for making the following changes:

(1) When evaluating Equation 3.5–1, use the values of $\bar{V}$, $C_{p,a}$, v_n', (or v_n), and W_n that were recorded during the section 3.7 steady-state test conducted at the same test conditions.

(2) Calculate Γ using,

$$\Gamma = \int_{\tau_1}^{\tau_2} \left[T_{a2}(\tau) - T_{a1}(\tau)\right] \delta\tau, \ \mathrm{hr} \cdot {}^\circ\mathrm{F}.$$

b. For ducted heat pumps tested without an indoor fan installed (excluding the special case where a variable-speed fan is temporarily removed), increase q_{cyc} by the amount calculated using Equation 3.5–3. Additionally, increase e_{cyc} by the amount calculated using Equation 3.5–2. In making these calculations, use the average indoor air volume rate ($\bar{V}_s$) determined from the section 3.7 steady-state heating mode test conducted at the same test conditions.

c. For non-ducted heat pumps, subtract the electrical energy used by the indoor fan during the 3 minutes after compressor cutoff from the non-ducted heat pump's integrated heating capacity, q_{cyc}.

d. If a heat pump defrost cycle is manually or automatically initiated immediately prior to or during the OFF/ON cycling, operate the heat pump continuously until 10 minutes after defrost termination. After that, begin cycling the heat pump immediately or delay until the specified test conditions have been re-established. Pay attention to preventing defrosts after beginning the cycling process. For heat pumps that cycle off the indoor fan during a defrost cycle, make no effort here to restrict the air movement through the indoor coil while the fan is off. Resume the OFF/ON cycling while conducting a minimum of two complete compressor OFF/ON cycles before determining q_{cyc} and e_{cyc}.

3.8.1 Heating mode cyclic-degradation coefficient calculation. Use the results from the optional cyclic test and the required steady-state test that were conducted at the same test conditions to determine the heating-mode cyclic-degradation coefficient C_D^h. Add ''(k=2)'' to the coefficient if it corresponds to a two-capacity unit cycling at high capacity. For the below calculation of the heating mode cyclic degradation coefficient, do not include the duct loss correction from section 7.3.3.3 of ASHRAE Standard 37–2005 (incorporated by reference, see §430.22) in determining $\dot{Q}_h^k(T_{cyc})$ (or q_{cyc}). If the optional cyclic test is conducted but yields a tested C_D^h that exceeds the default C_D^h or if the optional test is not conducted, assign C_D^h the default value of 0.25. The default value for two-capacity units cycling at high capacity, however, is the low-capacity coefficient, i.e., C_D^h (k=2) = C_D^h. The tested C_D^h is calculated as follows:

$$C_D^h = \frac{1 - \dfrac{COP_{cyc}}{COP_{ss}\left(T_{cyc}\right)}}{1 - HLF}$$

where,

$$COP_{cyc} = \frac{q_{cyc}}{3.413 \dfrac{\mathrm{Btu/h}}{\mathrm{W}} \cdot e_{cyc}},$$

the average coefficient of performance during the cyclic heating mode test, dimensionless.

$$COP_{ss}\left(T_{cyc}\right) = \frac{\dot{Q}_h^k\left(T_{cyc}\right)}{3.413 \dfrac{\mathrm{Btu/h}}{\mathrm{W}} \cdot \dot{E}_h^k\left(T_{cyc}\right)},$$

the average coefficient of performance during the steady-state heating mode test conducted at the same test conditions—*i.e.*, same outdoor dry bulb temperature, T_{cyc}, and speed/capacity, k, if applicable—as specified for the cyclic heating mode test, dimensionless.

$$HLF = \frac{q_{cyc}}{\dot{Q}_h^k\left(T_{cyc}\right) \cdot \Delta\tau_{cyc}},$$

the heating load factor, dimensionless.

T_{cyc} = the nominal outdoor temperature at which the cyclic heating mode test is conducted, 62 or 47 °F.

$\Delta\tau_{cyc}$ = the duration of the OFF/ON intervals; 0.5 hours when testing a heat pump having a single-speed or two-capacity compressor and 1.0 hour when testing a heat pump having a variable-speed compressor.

Round the calculated value for C_D^h to the nearest 0.01. If C_D^h is negative, then set it equal to zero.

TABLE 14—TEST OPERATING AND TEST CONDITION TOLERANCES FOR CYCLIC HEATING MODE TESTS.

	Test operating tolerance [1]	Test condition tolerance [2]
Indoor entering dry-bulb temperature, [3] °F	2.0	0.5
Indoor entering wet-bulb temperature, [3] °F	1.0	
Outdoor entering dry-bulb temperature, [3] °F	2.0	0.5
Outdoor entering wet-bulb temperature, [3] °F	2.0	1.0
External resistance to air-flow, [3] inches of water	0.05	
Airflow nozzle pressure difference or velocity pressure, [3] % of reading	2.0	[4] 2.0
Electrical voltage, [5] % of rdg	2.0	1.5

[1] See Definition 1.41.
[2] See Definition 1.40.
[3] Applies during the interval that air flows through the indoor (outdoor) coil except for the first 30 seconds after flow initiation. For units having a variable-speed indoor fan that ramps, the tolerances listed for the external resistance to airflow shall apply from 30 seconds after achieving full speed until ramp down begins.
[4] The test condition shall be the average nozzle pressure difference or velocity pressure measured during the steady-state test conducted at the same test conditions.
[5] Applies during the interval that at least one of the following—the compressor, the outdoor fan, or, if applicable, the indoor fan—are operating, except for the first 30 seconds after compressor start-up.

3.9 Test procedures for Frost Accumulation heating mode tests (the H2, $H2_2$, $H2_V$, and $H2_1$ Tests). a. Confirm that the defrost controls of the heat pump are set as specified in section 2.2.1. Operate the test room reconditioning apparatus and the heat pump for at least 30 minutes at the specified section 3.6 test conditions before starting the ''preliminary'' test period. The preliminary test period must immediately precede the ''official'' test period, which is the heating and defrost interval over which data are collected for evaluating average space heating capacity and average electrical power consumption.

b. For heat pumps containing defrost controls which are likely to cause defrosts at intervals less than one hour, the preliminary test period starts at the termination of an automatic defrost cycle and ends at the termination of the next occurring automatic defrost cycle. For heat pumps containing defrost controls which are likely to cause defrosts at intervals exceeding one hour, the preliminary test period must consist of a heating interval lasting at least one hour followed by a defrost cycle that is either manually or automatically initiated. In all cases, the heat pump's own controls must govern when a defrost cycle terminates.

c. The official test period begins when the preliminary test period ends, at defrost termination. The official test period ends at the termination of the next occurring automatic defrost cycle. When testing a heat pump that uses a time-adaptive defrost control system (see Definition 1.42), however, manually initiate the defrost cycle that ends the official test period at the instant indicated by instructions provided by the manufacturer. If the heat pump has not undergone a defrost after 6 hours, immediately conclude the test and use the results from the full 6-hour period to calculate the average space heating capacity and average electrical power consumption.

For heat pumps that turn the indoor fan off during the defrost cycle, take steps to cease forced airflow through the indoor coil and block the outlet duct whenever the heat pump's controls cycle off the indoor fan. If it is installed, use the outlet damper box described in section 2.5.4.1 to affect the blocked outlet duct.

d. Defrost termination occurs when the controls of the heat pump actuate the first change in converting from defrost operation to normal heating operation. Defrost initiation occurs when the controls of the heat pump first alter its normal heating operation in order to eliminate possible accumulations of frost on the outdoor coil.

e. To constitute a valid Frost Accumulation test, satisfy the test tolerances specified in Table 15 during both the preliminary and official test periods. As noted in Table 15, test operating tolerances are specified for two sub-intervals: (1) When heating, except for the first 10 minutes after the termination of a defrost cycle (Sub-interval H, as described in Table 15) and (2) when defrosting, plus these same first 10 minutes after defrost termination (Sub-interval D, as described in Table 15). Evaluate compliance with Table 15 test condition tolerances and the majority of the test operating tolerances using the averages from measurements recorded only during Sub-interval H. Continuously record the dry bulb temperature of the air entering the indoor coil, and the dry bulb temperature and water vapor content of the air entering the outdoor coil. Sample the remaining parameters listed in Table 15 at equal intervals that span 10 minutes or less.

f. For the official test period, collect and use the following data to calculate average space heating capacity and electrical power. During heating and defrosting intervals when the controls of the heat pump have the indoor fan on, continuously record the dry-bulb temperature of the air entering (as noted above) and leaving the indoor coil. If using a thermopile, continuously record the difference between the leaving and entering dry-bulb temperatures during the interval(s) that air flows through the indoor coil. For heat pumps tested without an indoor fan installed, determine the corresponding cumulative time (in hours) of indoor coil airflow,

$\Delta\tau_a$. Sample measurements used in calculating the air volume rate (refer to sections 7.7.2.1 and 7.7.2.2 of ASHRAE Standard 37–2005 (incorporated by reference, see §430.22)) at equal intervals that span 10 minutes or less. (Note: In the first printing of ASHRAE Standard 37–2005, the second IP equation for Q_{mi} should read: .) Record the electrical energy consumed, expressed in watt-hours, from defrost termination to defrost termination, $e_{DEF}{}^{k}(35)$, as well as the corresponding elapsed time in hours, $\Delta\tau_{FR}$.

TABLE 15—TEST OPERATING AND TEST CONDITION TOLERANCES FOR FROST ACCUMULATION HEATING MODE TESTS.

	Test operating tolerance [1]		Test condition tolerance [2]
	Sub-interval H [3]	Sub-interval D [4]	Sub-interval H [3]
Indoor entering dry-bulb temperature, °F	2.0	[5] 4.0	0.5
Indoor entering wet-bulb temperature, °F	1.0	.....	
Outdoor entering dry-bulb temperature, °F	2.0	10.0	1.0
Outdoor entering wet-bulb temperature, °F	1.5	.....	0.5
External resistance to airflow, inches of water	0.05	.....	0.02 [6]
Electrical voltage, % of rdg	2.0	.....	1.5

[1] See Definition 1.41.
[2] See Definition 1.40.
[3] Applies when the heat pump is in the heating mode, except for the first 10 minutes after termination of a defrost cycle.
[4] Applies during a defrost cycle and during the first 10 minutes after the termination of a defrost cycle when the heat pump is operating in the heating mode.
[5] For heat pumps that turn off the indoor fan during the defrost cycle, the noted tolerance only applies during the 10 minute interval that follows defrost termination.
[6] Only applies when testing non-ducted heat pumps.

3.9.1 Average space heating capacity and electrical power calculations. a. Evaluate average space heating capacity, $\dot{Q}_h{}^{k}(35)$, when expressed in units of Btu per hour, using:

$$\dot{Q}_h^k(35) = \frac{60 \cdot \overline{\dot{V}} \cdot C_{p,a} \cdot \Gamma}{\Delta\tau_{FR}\left[v_n' \cdot \left(1 + W_n\right)\right]} = \frac{60 \cdot \overline{\dot{V}} \cdot C_{p,a} \cdot \Gamma}{\Delta\tau_{FR} \cdot v_n}$$

where,

$\overline{\dot{V}}$ = the average indoor air volume rate measured during Sub-interval H, cfm.

$C_{p,a} = 0.24 + 0.444 \cdot W_n$, the constant pressure specific heat of the air-water vapor mixture that flows through the indoor coil and is expressed on a dry air basis, Btu / $lbm_{da} \cdot °F$.

v_n' = specific volume of the air-water vapor mixture at the nozzle, ft^3 / lbm_{mx}.

W_n = humidity ratio of the air-water vapor mixture at the nozzle, lbm of water vapor per lbm of dry air.

$\Delta\tau_{FR} = \tau_2 - \tau_1$, the elapsed time from defrost termination to defrost termination, hr.

$$\Gamma = \int_{\tau_1}^{\tau_2} \left[T_{a2}(\tau) - T_{a1}(\tau)\right] d\tau,\ \text{hr} \cdot °\text{F}.$$

$T_{a1}(\tau)$ = dry bulb temperature of the air entering the indoor coil at elapsed time τ, °F; only recorded when indoor coil airflow occurs; assigned the value of zero during periods (if any) where the indoor fan cycles off.

$T_{a2}(\tau)$ = dry bulb temperature of the air leaving the indoor coil at elapsed time τ, °F; only recorded when indoor coil airflow occurs; assigned the value of zero during periods (if any) where the indoor fan cycles off.

τ_1 = the elapsed time when the defrost termination occurs that begins the official test period, hr.

τ_2 = the elapsed time when the next automatically occurring defrost termination occurs, thus ending the official test period, hr.

v_n = specific volume of the dry air portion of the mixture evaluated at the dry-bulb temperature, vapor content, and barometric pressure existing at the nozzle, ft^3 per lbm of dry air.

To account for the effect of duct losses between the outlet of the indoor unit and the section 2.5.4 dry-bulb temperature grid, adjust $\dot{Q}_h{}^{k}(35)$ in accordance with section 7.3.4.3 of ASHRAE Standard 37–2005 (incorporated by reference, see §430.22).

b. Evaluate average electrical power, $\dot{E}_h{}^{k}(35)$, when expressed in units of watts, using:

$$\dot{E}_h^k(35) = \frac{e_{def}(35)}{\Delta\tau_{FR}}.$$

For heat pumps tested without an indoor fan installed, increase $\dot{Q}_h^k(35)$ by,

$$\frac{1250\ \text{Btu/h}}{1000\ \text{scfm}} \cdot \overline{\dot{V}}_s \cdot \frac{\Delta\tau_a}{\Delta\tau_{FR}},$$

and increase $\dot{E}_h^k(35)$ by,

$$\frac{365\ \text{W}}{1000\ \text{scfm}} \cdot \overline{\dot{V}}_s \cdot \frac{\Delta\tau_a}{\Delta\tau_{FR}},$$

where $\overline{\dot{V}}_s$ is the average indoor air volume rate measured during the Frost Accumulation heating mode test and is expressed in units of cubic feet per minute of standard air (scfm).

c. For heat pumps having a constant-air-volume-rate indoor fan, the five additional steps listed below are required if the average of the external static pressures measured during sub-Interval H exceeds the applicable section 3.1.4.4, 3.1.4.5, or 3.1.4.6 minimum (or targeted) external static pressure (ΔP_{min}) by 0.03 inches of water or more:

1. Measure the average power consumption of the indoor fan motor ($\dot{E}_{fan,1}$) and record the corresponding external static pressure (ΔP_1) during or immediately following the Frost Accumulation heating mode test. Make the measurement at a time when the heat pump is heating, except for the first 10 minutes after the termination of a defrost cycle.

2. After the Frost Accumulation heating mode test is completed and while maintaining the same test conditions, adjust the exhaust fan of the airflow measuring apparatus until the external static pressure increases to approximately $\Delta P_1 + (\Delta P_1 - \Delta P_{min})$.

3. After re-establishing steady readings for the fan motor power and external static pressure, determine average values for the indoor fan power ($\dot{E}_{fan,2}$) and the external static pressure (ΔP_2) by making measurements over a 5-minute interval.

4. Approximate the average power consumption of the indoor fan motor had the Frost Accumulation heating mode test been conducted at ΔP_{min} using linear extrapolation:

$$\dot{E}_{fan,min} = \frac{\dot{E}_{fan,2} - \dot{E}_{fan,1}}{\Delta P_2 - \Delta P_1}\left(\Delta P_{min} - \Delta P_1\right) + \dot{E}_{fan,1}.$$

5. Decrease the total heating capacity, $\dot{Q}_h^k(35)$, by the quantity $[(\dot{E}_{fan,1} - \dot{E}_{fan,min}) \cdot (\Delta\tau_a/\Delta\tau_{FR}]$, when expressed on a Btu/h basis. Decrease the total electrical power, $E_h^k(35)$, by the same quantity, now expressed in watts.

3.9.2 Demand defrost credit. a. Assign the demand defrost credit, F_{def}, that is used in section 4.2 to the value of 1 in all cases except for heat pumps having a demand-defrost control system (Definition 1.21). For such qualifying heat pumps, evaluate F_{def} using,

$$F_{def} = 1 + 0.03 \cdot \left[1 - \frac{\Delta\tau_{def} - 1.5}{\Delta\tau_{max} - 1.5}\right],$$

where,

$\Delta\tau_{def}$ = the time between defrost terminations (in hours) or 1.5, whichever is greater.

$\Delta\tau_{max}$ = maximum time between defrosts as allowed by the controls (in hours) or 12, whichever is less.

b. For two-capacity heat pumps and for section 3.6.2 units, evaluate the above equation using the $\Delta\tau_{def}$ that applies based on the Frost Accumulation Test conducted at high capacity and/or at the Heating Full-loadAir Volume Rate. For variable-speed heat pumps, evaluate $\Delta\tau_{def}$ based on the required Frost Accumulation Test conducted at the intermediate compressor speed.

3.10 Test procedures for steady-state Low Temperature heating mode tests (the H3, $H3_2$, and $H3_1$ Tests). Except for the modifications noted in this section, conduct the Low Temperature heating mode test using the same approach as specified in section 3.7 for the Maximum and High Temperature tests. After satisfying the section 3.7 requirements for the pretest interval but before beginning to collect data to determine $\dot{Q}_h^k(17)$ and $\dot{E}_h^k(17)$, conduct a defrost cycle. This defrost cycle may be manually or automatically initiated. The defrost sequence must be terminated by the action of the heat pump's defrost controls. Begin the 30-minute data collection interval described in section 3.7, from which $\dot{Q}_h^k(17)$ and $\dot{E}_h^k(17)$ are determined, no sooner than 10 minutes after defrost termination. Defrosts should be prevented over the 30-minute data collection interval.

3.11 Additional requirements for the secondary test methods.

3.11.1 If using the Outdoor Air Enthalpy Method as the secondary test method. During the ''official'' test, the outdoor air-side test apparatus described in section 2.10.1 is connected to the outdoor unit. To help compensate for any effect that the addition of

this test apparatus may have on the unit's performance, conduct a ''preliminary'' test where the outdoor air-side test apparatus is disconnected. Conduct a preliminary test prior to the first section 3.2 steady-state cooling mode test and prior to the first section 3.6 steady-state heating mode test. No other preliminary tests are required so long as the unit operates the outdoor fan during all cooling mode steady-state tests at the same speed and all heating mode steady-state tests at the same speed. If using more than one outdoor fan speed for the cooling mode steady-state tests, however, conduct a preliminary test prior to each cooling mode test where a different fan speed is first used. This same requirement applies for the heating mode tests.

3.11.1.1 If a preliminary test precedes the official test. a. The test conditions for the preliminary test are the same as specified for the official test. Connect the indoor air-side test apparatus to the indoor coil; disconnect the outdoor air-side test apparatus. Allow the test room reconditioning apparatus and the unit being tested to operate for at least one hour. After attaining equilibrium conditions, measure the following quantities at equal intervals that span 10 minutes or less:

1. The section 2.10.1 evaporator and condenser temperatures or pressures;

2. Parameters required according to the Indoor Air Enthalpy Method.

Continue these measurements until a 30-minute period (*e.g.*, four consecutive 10-minute samples) is obtained where the Table 7 or Table 13, whichever applies, test tolerances are satisfied.

b. After collecting 30 minutes of steady-state data, reconnect the outdoor air-side test apparatus to the unit. Adjust the exhaust fan of the outdoor airflow measuring apparatus until averages for the evaporator and condenser temperatures, or the saturated temperatures corresponding to the measured pressures, agree within ±0.5 °F of the averages achieved when the outdoor air-side test apparatus was disconnected. Calculate the averages for the reconnected case using five or more consecutive readings taken at one minute intervals. Make these consecutive readings after re-establishing equilibrium conditions and before initiating the official test.

3.11.1.2 If a preliminary test does not precede the official test. Connect the outdoor-side test apparatus to the unit. Adjust the exhaust fan of the outdoor airflow measuring apparatus to achieve the same external static pressure as measured during the prior preliminary test conducted with the unit operating in the same cooling or heating mode at the same outdoor fan speed.

3.11.1.3 Official test. a. Continue (preliminary test was conducted) or begin (no preliminary test) the official test by making measurements for both the Indoor and Outdoor Air Enthalpy Methods at equal intervals that span 10 minutes or less. Discontinue these measurement only after obtaining a 30-minute period where the specified test condition and test operating tolerances are satisfied. To constitute a valid official test:

(1) Achieve the energy balance specified in section 3.1.1; and,

(2) For cases where a preliminary test is conducted, the capacities determined using the Indoor Air Enthalpy Method from the official and preliminary test periods must agree within 2.0 percent.

b. For space cooling tests, calculate capacity from the outdoor air-enthalpy measurements as specified in sections 7.3.3.2 and 7.3.3.3 of ASHRAE Standard 37–2005 (incorporated by reference, see §430.22). Calculate heating capacity based on outdoor air-enthalpy measurements as specified in sections 7.3.4.2 and 7.3.3.4.3 of the same ASHRAE Standard. Adjust the outdoor-side capacity according to section 7.3.3.4 of ASHRAE Standard 37–2005 (incorporated by reference, see §430.22) to account for line losses when testing split systems. Use the outdoor unit fan power as measured during the official test and not the value measured during the preliminary test, as described in section 8.6.2 of ASHRAE Standard 37–2005 (incorporated by reference, see §430.22), when calculating the capacity.

3.11.2 If using the Compressor Calibration Method as the secondary test method.

a. Conduct separate calibration tests using a calorimeter to determine the refrigerant flow rate. Or for cases where the superheat of the refrigerant leaving the evaporator is less than 5 °F, use the calorimeter to measure total capacity rather than refrigerant flow rate. Conduct these calibration tests at the same test conditions as specified for the tests in this appendix. Operate the unit for at least one hour or until obtaining equilibrium conditions before collecting data that will be used in determining the average refrigerant flow rate or total capacity. Sample the data at equal intervals that span 10 minutes or less. Determine average flow rate or average capacity from data sampled over a 30-minute period where the Table 7 (cooling) or the Table 13 (heating) tolerances are satisfied. Otherwise, conduct the calibration tests according to ASHRAE Standard 23–05 (incorporated by reference, see §430.22), ASHRAE Standard 41.9–2000 (incorporated by reference, see §430.22), and section 7.4 of ASHRAE Standard 37–2005 (incorporated by reference, see §430.22).

b. Calculate space cooling and space heating capacities using the compressor calibration method measurements as specified in section 7.4.5 and 7.4.6 respectively, of ASHRAE Standard 37–2005 (incorporated by reference, see §430.22).

b. Calculate space cooling and space heating capacities using the compressor calibration method measurements as specified in section 7.4.5 and 7.4.6 respectively, of ASHRAE Standard 37–2005 (incorporated by reference, see § 430.22).

3.11.3 If using the Refrigerant-Enthalpy Method as the secondary test method. Conduct this secondary method according to section 7.5 of ASHRAE Standard 37–2005 (incorporated by reference, see § 430.22). Calculate space cooling and heating capacities using the refrigerant-enthalpy method measurements as specified in sections 7.5.4 and 7.5.5, respectively, of the same ASHRAE Standard.

3.12 Rounding of space conditioning capacities for reporting purposes.

a. When reporting rated capacities, round them off as follows:

1. For capacities less than 20,000 Btu/h, round to the nearest 100 Btu/h.

2. For capacities between 20,000 and 37,999 Btu/h, round to the nearest 200 Btu/h.

3. For capacities between 38,000 and 64,999 Btu/h, round to the nearest 500 Btu/h.

b. For the capacities used to perform the section 4 calculations, however, round only to the nearest integer.

4. CALCULATIONS OF SEASONAL PERFORMANCE DESCRIPTORS

4.1 Seasonal Energy Efficiency Ratio (SEER) Calculations. SEER must be calculated as follows: For equipment covered under sections 4.1.2, 4.1.3, and 4.1.4, evaluate the seasonal energy efficiency ratio,

$$\mathrm{SEER} = \frac{\sum_{j=1}^{8} q_c\left(T_j\right)}{\sum_{j=1}^{8} e_c\left(T_j\right)} = \frac{\sum_{j=1}^{8} \frac{q_c\left(T_j\right)}{N}}{\sum_{j=1}^{8} \frac{e_c\left(T_j\right)}{N}} \qquad (4.1\text{-}1)$$

where,

$$\frac{q_c\left(T_j\right)}{N} =$$

the ratio of the total space cooling provided during periods of the space cooling season when the outdoor temperature fell within the range represented by bin temperature T_j to the total number of hours in the cooling season (N), Btu/h.

$$\frac{e_c\left(T_j\right)}{N} =$$

the electrical energy consumed by the test unit during periods of the space cooling season when the outdoor temperature fell within the range represented by bin temperature T_j to the total number of hours in the cooling season (N), W.

T_j = the outdoor bin temperature, °F. Outdoor temperatures are grouped or ''binned.'' Use bins of 5 °F with the 8 cooling season bin temperatures being 67, 72, 77, 82, 87, 92, 97, and 102 °F.

j = the bin number. For cooling season calculations, j ranges from 1 to 8.

Additionally, for sections 4.1.2, 4.1.3, and 4.1.4, use a building cooling load, $BL(T_j)$. When referenced, evaluate $BL(T_j)$ for cooling using,

$$\mathrm{BL}\left(T_j\right) = \frac{\left(T_j - 65\right)}{95 - 65} \cdot \frac{\dot{Q}_c^{k=2}(95)}{1.1} \qquad (4.1\text{-}2)$$

where,

$\dot{Q}_c^{k=2}(95)$ = the space cooling capacity determined from the A_2 Test and calculated as specified in section 3.3, Btu/h.

1.1 = sizing factor, dimensionless.

The temperatures 95 °F and 65 °F in the building load equation represent the selected outdoor design temperature and the zero-load base temperature, respectively.

4.1.1 SEER calculations for an air conditioner or heat pump having a single-speed compressor that was tested with a fixed-speed indoor fan installed, a constant-air-volume-rate indoor fan installed, or with no

indoor fan installed. a. Evaluate the seasonal energy efficiency ratio, expressed in units of Btu/watt-hour, using:

SEER = PLF(0.5) · EER_B

where,

$$EER_B = \frac{\dot{Q}_c(82)}{\dot{E}_c(82)},$$

the energy efficiency ratio determined from the B Test described in sections 3.2.1, 3.1.4.1, and 3.3, Btu/h per watt.

PLF(0.5) = 1 − 0.5 · C_D^c, the part-load performance factor evaluated at a cooling load factor of 0.5, dimensionless.

b. Refer to section 3.3 regarding the definition and calculation of $\dot{Q}_c(82)$ and $\dot{E}_c(82)$. If the optional tests described in section 3.2.1 are not conducted, set the cooling mode cyclic degradation coefficient, C_D^c, to the default value specified in section 3.5.3. If these optional tests are conducted, set C_D^c to the lower of:

1. The value calculated as per section 3.5.3; or

2. The section 3.5.3 default value of 0.25.

4.1.2 SEER calculations for an air conditioner or heat pump having a single-speed compressor and a variable-speed variable-air-volume-rate indoor fan.

4.1.2.1 Units covered by section 3.2.2.1 where indoor fan capacity modulation correlates with the outdoor dry bulb temperature. The manufacturer must provide information on how the indoor air volume rate or the indoor fan speed varies over the outdoor temperature range of 67 °F to 102 °F. Calculate SEER using Equation 4.1–1. Evaluate the quantity $q_c(T_j)/N$ in Equation 4.1–1 using,

$$\frac{q_c(T_j)}{N} = X(T_j) \cdot \dot{Q}_c(T_j) \cdot \frac{n_j}{N} \qquad (4.1.2\text{-}1)$$

where,

$$X(T_j) = \begin{Bmatrix} BL(T_j)/\dot{Q}_c(T_j) \\ \text{or} \\ 1 \end{Bmatrix};$$

whichever is less; the cooling mode load factor for temperature bin j, dimensionless.

$\dot{Q}_c(T_j)$ = the space cooling capacity of the test unit when operating at outdoor temperature, T_j, Btu/h.

n_j/N = fractional bin hours for the cooling season; the ratio of the number of hours during the cooling season when the outdoor temperature fell within the range represented by bin temperature T_j to the total number of hours in the cooling season, dimensionless.

a. For the space cooling season, assign n_j/N as specified in Table 16. Use Equation 4.1–2 to calculate the building load, $BL(T_j)$. Evaluate $\dot{Q}_c(T_j)$ using,

$$\dot{Q}_c(T_j) = \dot{Q}_c^{k=1}(T_j) + \frac{\dot{Q}_c^{k=2}(T_j) - \dot{Q}_c^{k=1}(T_j)}{FP_c^{k=2} - FP_c^{k=1}} \cdot \left[FP_c(T_j) - FP_c^{k=1}\right] \qquad (4.1.2\text{-}2)$$

where,

$$\dot{Q}_c^{k=1}(T_j) = \dot{Q}_c^{k=1}(82) + \frac{\dot{Q}_c^{k=1}(95) - \dot{Q}_c^{k=1}(82)}{95 - 82} \cdot (T_j - 82),$$

the space cooling capacity of the test unit at outdoor temperature T_j if operated at the Cooling Minimum Air Volume Rate, Btu/h.

$$\dot{Q}_c^{k=2}\left(T_j\right) = \dot{Q}_c^{k=2}(82) + \frac{\dot{Q}_c^{k=2}(95) - \dot{Q}_c^{k=2}(82)}{95 - 82} \cdot \left(T_j - 82\right),$$

the space cooling capacity of the test unit at outdoor temperature T_j if operated at the Cooling Full-load Air Volume Rate, Btu/h.

b. For units where indoor fan speed is the primary control variable, $FP_c^{k=1}$ denotes the fan speed used during the required A_1 and B_1 Tests (see section 3.2.2.1), $FP_c^{k=2}$ denotes the fan speed used during the required A_2 and B_2 Tests, and $FP_c(T_j)$ denotes the fan speed used by the unit when the outdoor temperature equals T_j. For units where indoor air volume rate is the primary control variable, the three FP_c's are similarly defined only now being expressed in terms of air volume rates rather than fan speeds. Refer to sections 3.2.2.1, 3.1.4 to 3.1.4.2, and 3.3 regarding the definitions and calculations of $\dot{Q}_c^{k=1}(82)$, $\dot{Q}_c^{k=1}(95)$, $\dot{Q}_c^{k=2}(82)$, and $\dot{Q}_c^{k=2}(95)$.

Calculate $e_c(T_j)/N$ in Equation 4.1–1 using,

$$\frac{e_c\left(T_j\right)}{N} = \frac{X\left(T_j\right) \cdot \dot{E}_c\left(T_j\right)}{PLF_j} \cdot \frac{n_j}{N} \qquad (4.1.2\text{-}3)$$

where,

$PLF_j = 1 - C_D^c \cdot [1 - X(T_j)]$, the part load factor, dimensionless.

$\dot{E}_c(T_j)$ = the electrical power consumption of the test unit when operating at outdoor temperature T_j, W.

c. The quantities $X(T_j)$ and n_j/N are the same quantities as used in Equation 4.1.2–1. If the optional tests described in section 3.2.2.1 and Table 4 are not conducted, set the cooling mode cyclic degradation coefficient, C_D^c, to the default value specified in section 3.5.3. If these optional tests are conducted, set C_D^c to the lower of:

1. The value calculated as per section 3.5.3; or

2 .The section 3.5.3 default value of 0.25.

d. Evaluate $\dot{E}_c(T_j)$ using,

$$\dot{E}_c\left(T_j\right) = \dot{E}_c^{k=1}\left(T_j\right) + \frac{\dot{E}_c^{k=2}\left(T_j\right) - \dot{E}_c^{k=1}\left(T_j\right)}{FP_c^{k=2} - FP_c^{k=1}} \cdot \left[FP_c\left(T_j\right) - FP_c^{k=1}\right] \qquad (4.1.2\text{-}4)$$

where

$$\dot{E}_c^{k=1}\left(T_j\right) = \dot{E}_c^{k=1}(82) + \frac{\dot{E}_c^{k=1}(95) - \dot{E}_c^{k=1}(82)}{95 - 82} \cdot \left(T_j - 82\right),$$

the electrical power consumption of the test unit at outdoor temperature T_j if operated at the Cooling Minimum Air Volume Rate, W.

$$\dot{E}_c^{k=2}\left(T_j\right) = \dot{E}_c^{k=2}(82) + \frac{\dot{E}_c^{k=2}(95) - \dot{E}_c^{k=2}(82)}{95 - 82} \cdot \left(T_j - 82\right),$$

the electrical power consumption of the test unit at outdoor temperature T_j if operated at the Cooling Full-load Air Volume Rate, W.

e. The parameters $FP_c^{k=1}$, and $FP_c^{k=2}$, and $FP_c(T_j)$ are the same quantities that are used when evaluating Equation 4.1.2–2. Refer to sections 3.2.2.1, 3.1.4 to 3.1.4.2, and 3.3 regarding the definitions and calculations of $\dot{E}_c^{k=1}(82)$, $\dot{E}_c^{k=1}(95)$, $\dot{E}_c^{k=2}(82)$, and $\dot{E}_c^{k=2}(95)$.

4.1.2.2 Units covered by section 3.2.2.2 where indoor fan capacity modulation is used to adjust the sensible to total cooling capacity ratio. Calculate SEER as specified in section 4.1.1.

4.1.3 SEER calculations for an air conditioner or heat pump having a two-capacity compressor. Calculate SEER using Equation 4.1–1. Evaluate the space cooling capacity, $\dot{Q}_c^{k=1}(T_j)$, and electrical power consumption, $\dot{E}_c^{k=1}(T_j)$, of the test unit when operating at low compressor capacity and outdoor temperature T_j using,

$$\dot{Q}_c^{k=1}(T_j) = \dot{Q}_c^{k=1}(67) + \frac{\dot{Q}_c^{k=1}(82) - \dot{Q}_c^{k=1}(67)}{82-67} \cdot (T_j - 67) \qquad (4.1.3\text{-}1)$$

$$\dot{E}_c^{k=1}(T_j) = E_c^{k=1}(67) + \frac{E_c^{k=1}(82) - E_c^{k=1}(67)}{82-67} \cdot (T_j - 67) \qquad (4.1.3\text{-}2)$$

where $\dot{Q}_c^{k=1}(82)$ and $\dot{E}_c^{k=1}(82)$ are determined from the B_1 Test, $\dot{Q}_c^{k=1}(67)$ and $\dot{E}_c^{k=1}(67)$ are determined from the F_1 Test, and all four quantities are calculated as specified in section 3.3. Evaluate the space cooling capacity, $\dot{Q}_c^{k=2}(T_j)$, and electrical power consumption, $\dot{E}_c^{k=2}(T_j)$, of the test unit when operating at high compressor capacity and outdoor temperature T_j using,

$$\dot{Q}_c^{k=2}(T_j) = \dot{Q}_c^{k=2}(82) + \frac{\dot{Q}_c^{k=2}(95) - \dot{Q}_c^{k=2}(82)}{95-82} \cdot (T_j - 82) \qquad (4.1.3\text{-}3)$$

$$\dot{E}_c^{k=2}(T_j) = \dot{E}_c^{k=2}(82) + \frac{\dot{E}_c^{k=2}(95) - \dot{E}_c^{k=2}(82)}{95-82} \cdot (T_j - 82) \qquad (4.1.3\text{-}4)$$

where $\dot{Q}_c^{k=2}(95)$ and $\dot{E}_c^{k=2}(95)$ are determined from the A_2 Test, $\dot{Q}_c^{k=2}(82)$, and $\dot{E}_c^{k=2}(82)$, are determined from the B_2 Test, and all are calculated as specified in section 3.3.

The calculation of Equation 4.1–1 quantities $q_c(T_j)/N$ and $e_c(T_j)/N$ differs depending on whether the test unit would operate at low capacity (section 4.1.3.1), cycle between low and high capacity (section 4.1.3.2), or operate at high capacity (sections 4.1.3.3 and 4.1.3.4) in responding to the building load. For units that lock out low capacity operation at higher outdoor temperatures, the manufacturer must supply information regarding this temperature so that the appropriate equations are used. Use Equation 4.1–2 to calculate the building load, $BL(T_j)$, for each temperature bin.

4.1.3.1 Steady-state space cooling capacity at low compressor capacity is greater than or equal to the building cooling load at temperature T_j, $\dot{Q}_c^{k=1}(T_j) \geq BL(T_j)$.

$$\frac{q_c(T_j)}{N} = X^{k=1}(T_j) \cdot \dot{Q}_c^{k=1}(T_j) \cdot \frac{n_j}{N}$$

$$\frac{e_c(T_j)}{N} = \frac{X^{k=1}(T_j) \cdot \dot{E}_c^{k=1}(T_j)}{PLF_j} \cdot \frac{n_j}{N}$$

where,

$X^{k=1}(T_j) = BL(T_j)/\dot{Q}_c^{k=1}(T_j)$, the cooling mode low capacity load factor for temperature bin j, dimensionless.

$PLF_j = 1 - C_D^c \cdot [1 - X^{k=1}(T_j)]$, the part load factor, dimensionless.

$\frac{n_j}{N} =$

fractional bin hours for the cooling season; the ratio of the number of hours during the cooling season when the outdoor temperature fell within the range represented by bin temperature T_j to the total number of hours in the cooling season, dimensionless.

Obtain the fractional bin hours for the cooling season, n_j/N, from Table 16. Use Equations 4.1.3–1 and 4.1.3–2, respectively, to evaluate $\dot{Q}_c^{k=1}(T_j)$ and $\dot{E}_c^{k=1}(T_j)$. If the optional tests described in section 3.2.3 and Table 5 are not conducted, set the cooling mode cyclic degradation coefficient, C_D^c, to the default value specified in section 3.5.3. If these optional tests are conducted, set C_D^c to the lower of:

a. The value calculated according to section 3.5.3; or

b. The section 3.5.3 default value of 0.25.

TABLE 16—DISTRIBUTION OF FRACTIONAL HOURS WITHIN COOLING SEASON TEMPERATURE BINS

Bin number, j	Bin temperature range °F	Representative temperature for bin °F	Fraction of of total temperature bin hours, n_j/N
1	65–69	67	0.214
2	70–74	72	0.231
3	75–79	77	0.216
4	80–84	82	0.161
5	85–89	87	0.104
6	90–94	92	0.052
7	95–99	97	0.018
8	100–104	102	0.004

4.1.3.2 Unit alternates between high (k=2) and low (k=1) compressor capacity to satisfy the building cooling load at temperature T_j, $\dot{Q}_c^{k=1}(T_j) < BL(T_j) < \dot{Q}_c^{k=2}(T_j)$.

$$\frac{q_c(T_j)}{N} = \left[X^{k=1}(T_j)\cdot\dot{Q}_c^{k=1}(T_j) + X^{k=2}(T_j)\cdot\dot{Q}_c^{k=2}(T_j)\right]\cdot\frac{n_j}{N}$$

$$\frac{e_c(T_j)}{N} = \left[X^{k=1}(T_j)\cdot\dot{E}_c^{k=1}(T_j) + X^{k=2}(T_j)\cdot\dot{E}_c^{k=2}(T_j)\right]\cdot\frac{n_j}{N}$$

where,

$$X^{k=1}(T_j) = \frac{\dot{Q}_c^{k=2}(T_j) - BL(T_j)}{\dot{Q}_c^{k=2}(T_j) - \dot{Q}_c^{k=1}(T_j)},$$

the cooling mode, low capacity load factor for temperature bin j, dimensionless.

$X^{k=2}(T_j) = 1 - X^{k=1}(T_j)$, the cooling mode, high capacity load factor for temperature bin j, dimensionless.

Obtain the fractional bin hours for the cooling season, n_j/N, from Table 16. Use Equations 4.1.3–1 and 4.1.3–2, respectively, to evaluate $\dot{Q}_c^{k=1}(T_j)$ and $\dot{E}_c^{k=1}(T_j)$. Use Equations 4.1.3–3 and 4.1.3–4, respectively, to evaluate $\dot{Q}_c^{k=2}(T_j)$ and $\dot{E}_c^{k=2}(T_j)$.

4.1.3.3 Unit only operates at high (k=2) compressor capacity at temperature T_j and its capacity is greater than the building cooling load, $BL(T_j) < \dot{Q}_c^{k=2}(T_j)$. This section applies to units that lock out low compressor capacity operation at higher outdoor temperatures.

$$\frac{q_c(T_j)}{N} = X^{k=2}(T_j)\cdot\dot{Q}_c^{k=2}(T_j)\cdot\frac{n_j}{N}$$

$$\frac{e_c(T_j)}{N} = \frac{X^{k=2}(T_j)\cdot\dot{E}_c^{k=2}(T_j)}{PLF_j}\cdot\frac{n_j}{N}$$

where,

$X^{k=2}(T_j) = BL(T_j)/\dot{Q}_c^{k=2}(T_j)$, the cooling mode high capacity load factor for temperature bin j, dimensionless.

$$PLF_j = 1 - C_D^c(k=2)\cdot\left[1 - X^{k=2}(T_j)\right],$$

the part load factor, dimensionless.

Obtain the fraction bin hours for the cooling season,

$$\frac{n_j}{N},$$

from Table 16. Use Equations 4.1.3–3 and 4.1.3–4, respectively, to evaluate $\dot{Q}_c^{k=2}(T_j)$ and $\dot{E}_c^{k=2}(T_j)$. If the optional C_2 and D_2 Tests described in section 3.2.3 and Table 5 are not conducted, set C_D^c (k=2) equal to the default

value specified in section 3.5.3. If these optional tests are conducted, set C_D^c (k=2) to the lower of:

a. the C_D^c (k=2) value calculated as per section 3.5.3; or

b. the section 3.5.3 default value for C_D^c (k=2) .

4.1.3.4 Unit must operate continuously at high (k=2) compressor capacity at temperature T_j, $BL(T_j) \geq \dot{Q}_c^{k=2}(T_j)$.

$$\frac{q_c(T_j)}{N} = \dot{Q}_c^{k=2}(T_j) \cdot \frac{n_j}{N}$$

$$\frac{e_c(T_j)}{N} = \dot{E}_c^{k=2}(T_j) \cdot \frac{n_j}{N} \cdot$$

Obtain the fractional bin hours for the cooling season, n_j/N, from Table 16. Use Equations 4.1.3–3 and 4.1.3–4, respectively, to evaluate $\dot{Q}_c^{k=2}(T_j)$ and $\dot{E}_c^{k=2}(T_j)$.

4.1.4 SEER calculations for an air conditioner or heat pump having a variable-speed compressor. Calculate SEER using Equation 4.1–1. Evaluate the space cooling capacity, $\dot{Q}_c^{k=1}(T_j)$, and electrical power consumption, $\dot{E}_c^{k=1}(T_j)$, of the test unit when operating at minimum compressor speed and outdoor temperature T_j. Use,

$$\dot{Q}_c^{k=1}(T_j) = \dot{Q}_c^{k=1}(67) + \frac{\dot{Q}_c^{k=1}(82) - \dot{Q}_c^{k=1}(67)}{82-67} \cdot (T_j - 67) \qquad (4.1.4\text{-}1)$$

$$\dot{E}_c^{k=1}(T_j) = \dot{E}_c^{k=1}(67) + \frac{\dot{E}_c^{k=1}(82) - \dot{E}_c^{k=1}(67)}{82-67} \cdot (T_j - 67) \qquad (4.1.4\text{-}2)$$

where $\dot{Q}_c^{k=1}(82)$ and $\dot{E}_c^{k=1}(82)$ are determined from the B_1 Test, $\dot{Q}_c^{k=1}(67)$ and $\dot{E}_c^{k=1}(67)$ are determined from the F1 Test, and all four quantities are calculated as specified in section 3.3. Evaluate the space cooling capacity, $\dot{Q}_c^{k=2}(T_j)$, and electrical power consumption, $\dot{E}_c^{k=2}(T_j)$, of the test unit when operating at maximum compressor speed and outdoor temperature T_j. Use Equations 4.1.3–3 and 4.1.3–4, respectively, where $\dot{Q}_c^{k=2}(95)$ and $\dot{E}_c^{k=2}(95)$ are determined from the A_2 Test, $\dot{Q}_c^{k=2}(82)$ and $\dot{E}_c^{k=2}(82)$ are determined from the B_2 Test, and all four quantities are calculated as specified in section 3.3. Calculate the space cooling capacity, $\dot{Q}_c^{k=v}(T_j)$, and electrical power consumption, $\dot{E}_c^{k=v}(T_j)$, of the test unit when operating at outdoor temperature T_j and the intermediate compressor speed used during the section 3.2.4 (and Table 6) E_V Test using,

$$M_Q = \left[\frac{\dot{Q}_c^{k=1}(82) - \dot{Q}_c^{k=1}(67)}{82-67} \cdot (1 - N_Q)\right] + \left[N_Q \cdot \frac{\dot{Q}_c^{k=2}(95) - \dot{Q}_c^{k=2}(82)}{95-82}\right]$$

$$M_E = \left[\frac{\dot{E}_c^{k=1}(82) - \dot{E}_c^{k=1}(67)}{82-67} \cdot (1 - N_E)\right] + \left[N_E \cdot \frac{\dot{E}_c^{k=2}(95) - \dot{E}_c^{k=2}(82)}{95-82}\right]$$

4.1.4.1 Steady-state space cooling capacity when operating at minimum compressor speed is greater than or equal to the building cooling load at temperature T_j, $\dot{Q}_c^{k=1}(T_j) \geq BL(T_j)$.

$$\frac{q_c(T_j)}{N} = X^{k=1}(T_j) \cdot \dot{Q}_c^{k=1}(T_j) \cdot \frac{n_j}{N}$$

$$\frac{e_c(T_j)}{N} = \frac{X^{k=1}(T_j) \cdot \dot{E}_c^{k=1}(T_j)}{PLF_J} \cdot \frac{n_j}{N}$$

where,

$X^{k=1}(T_j) = BL(T_j) / \dot{Q}_c^{k=1}(T_j)$, the cooling mode minimum speed load factor for temperature bin j, dimensionless.

$PLF_j = 1 - C_D^c \cdot [1 - X^{k=1}(T_j)]$, the part load factor, dimensionless.

n_j/N = fractional bin hours for the cooling season; the ratio of the number of hours during the cooling season when the outdoor temperature fell within the range represented by bin temperature T_j to the total number of hours in the cooling season, dimensionless.

Obtain the fractional bin hours for the cooling season, n_j/N, from Table 16. Use Equations 4.1.3–1 and 4.1.3–2, respectively, to evaluate $\dot{Q}_c^{k=1}(T_j)$ and $\dot{E}_c^{k=1}(T_j)$. If the optional tests described in section 3.2.4 and Table 6 are not conducted, set the cooling mode cyclic degradation coefficient, C_D^c, to the default value specified in section 3.5.3. If these optional tests are conducted, set C_D^c to the lower of:

a. The value calculated according to section 3.5.3; or

b. The section 3.5.3 default value of 0.25.

4.1.4.2 Unit operates at an intermediate compressor speed (k=i) in order to match the building cooling load at temperature T_j, $\dot{Q}_c^{k=1}(T_j) < BL(T_j) < \dot{Q}_c^{k=2}(T_j)$.

$$\frac{q_c(T_j)}{N} = \dot{Q}_c^{k=i}(T_j) \cdot \frac{n_j}{N}$$

$$\frac{e_c(T_j)}{N} = \dot{E}_c^{k=i}(T_j) \cdot \frac{n_j}{N}$$

where,

$\dot{Q}_c^{k=i}(T_j) = BL(T_j)$, the space cooling capacity delivered by the unit in matching the building load at temperature T_j, Btu/h. The matching occurs with the unit operating at compressor speed k = i.

$$\dot{E}_c^{k=i}(T_j) = \frac{\dot{Q}_c^{k=i}(T_j)}{EER^{k=i}(T_j)},$$

the electrical power input required by the test unit when operating at a compressor speed of k = i and temperature T_j, W.

$EER^{k=i}(T_j)$ = the steady-state energy efficiency ratio of the test unit when operating at a compressor speed of k = i and temperature T_j, Btu/h per W.

Obtain the fractional bin hours for the cooling season, n_j/N, from Table 16. For each temperature bin where the unit operates at an intermediate compressor speed, determine the energy efficiency ratio $EER^{k=i}(T_j)$ using,

$EER^{k=i}(T_j) = A + B \cdot T_j + C \cdot T_j^2$.

For each unit, determine the coefficients A, B, and C by conducting the following calculations once:

$$D = \frac{T_2^2 - T_1^2}{T_v^2 - T_1^2}$$

$$B = \frac{EER^{k=1}(T_1) - EER^{k=2}(T_2) - D \cdot \left[EER^{k=1}(T_1) - EER^{k=v}(T_v)\right]}{T_1 - T_2 - D \cdot (T_1 - T_v)}$$

$$C = \frac{EER^{k=1}(T_1) - EER^{k=2}(T_2) - B \cdot (T_1 - T_2)}{T_1^2 - T_2^2}$$

$$A = EER^{k=2}(T_2) - B \cdot T_2 - C \cdot T_2^2$$

where,

T_1 = the outdoor temperature at which the unit, when operating at minimum compressor speed, provides a space cooling capacity that is equal to the building load ($\dot{Q}_c^{k=1}(T_1) = BL(T_1)$), °F. Determine T_1 by equating Equations 4.1.3–1 and 4.1–2 and solving for outdoor temperature. T_v = the outdoor temperature at which the unit, when operating at the intermediate compressor speed used during the section 3.2.4 E_V Test, provides a space cooling capacity that is equal to the building load ($\dot{Q}_c^{k=v}(T_v) = BL(T_v)$), °F. Determine T_v by equating Equations 4.1.4–1 and 4.1–2 and solving for outdoor temperature.

T_2 = the outdoor temperature at which the unit, when operating at maximum compressor speed, provides a space cooling capacity that is equal to the building load ($\dot{Q}_c^{k=2}(T_2) = BL(T_2)$), °F. Determine

T_2 by equating Equations 4.1.3–3 and 4.1–2 and solving for outdoor temperature.

$$EER^{k=1}(T_1) = \frac{\dot{Q}_c^{k=1}(T_1)\left[\text{Eqn. 4.1.4-1, substituting } T_1 \text{ for } T_j\right]}{\dot{E}_c^{k=1}(T_1)\left[\text{Eqn. 4.1.4-2, substituting } T_1 \text{ for } T_j\right]}, \text{ Btu/h per W.}$$

$$EER^{k=v}(T_v) = \frac{\dot{Q}_c^{k=v}(T_v)\left[\text{Eqn. 4.1.4-3, substituting } T_v \text{ for } T_j\right]}{\dot{E}_c^{k=v}(T_v)\left[\text{Eqn. 4.1.4-4, substituting } T_v \text{ for } T_j\right]}, \text{ Btu/h per W.}$$

$$EER^{k=2}(T_2) = \frac{\dot{Q}_c^{k=2}(T_2)\left[\text{Eqn. 4.1.3-3, substituting } T_2 \text{ for } T_j\right]}{\dot{E}_c^{k=2}(T_2)\left[\text{Eqn. 4.1.3-4, substituting } T_2 \text{ for } T_j\right]}, \text{ Btu/h per W.}$$

4.1.4.3 Unit must operate continuously at maximum (k=2) compressor speed at temperature Tj, $BL(T_j) \geq \dot{Q}_c^{k=2}(T_j)$. Evaluate the Equation 4.1–1 quantities

$$\frac{q_c(T_j)}{N} \text{ and } \frac{e_c(T_j)}{N}$$

as specified in section 4.1.3.4 with the understanding that $\dot{Q}_c^{k=2}(T_j)$ and $\dot{E}_c^{k=2}(T_j)$ correspond to maximum compressor speed operation and are derived from the results of the tests specified in section 3.2.4.

4.2 Heating Seasonal Performance Factor (HSPF) Calculations. Unless an approved alternative rating method is used, as set forth in 10 CFR 430.24(m), subpart B, HSPF must be calculated as follows: Six generalized climatic regions are depicted in Figure 2 and otherwise defined in Table 17. For each of these regions and for each applicable standardized design heating requirement, evaluate the heating seasonal performance factor using,

$$HSPF = \frac{\sum_j^J n_j \cdot BL(T_j)}{\sum_j^J e_h(T_j) + \sum_j^J RH(T_j)} \cdot F_{def} = \frac{\sum_j^J \left[\frac{n_j}{N} \cdot BL(T_j)\right]}{\sum_j^J \frac{e_h(T_j)}{N} + \sum_j^J \frac{RH(T_j)}{N}} \cdot F_{def} \qquad (4.2\text{-}1)$$

where,

$e_h(T_j) / N =$

The ratio of the electrical energy consumed by the heat pump during periods of the space heating season when the outdoor temperature fell within the range represented by bin temperature T_j to the total number of hours in the heating season (N), W. For heat pumps having a heat comfort controller, this ratio may also include electrical energy used by resistive elements to maintain a minimum air delivery temperature (see 4.2.5).

$RH(T_j) / N=$

The ratio of the electrical energy used for resistive space heating during periods when the outdoor temperature fell within the range represented by bin temperature T_j to the total number of hours in the heating season (N), W. Except as noted in section 4.2.5, resistive space heating is modeled as being used to meet that portion of the building load that the heat pump does not meet because of insufficient capacity or because the heat pump automatically turns off at the lowest outdoor temperatures. For heat pumps having a heat comfort controller, all or part of the electrical energy used by resistive heaters at a particular bin temperature may be reflected in $e_h(T_j) / N$ (see 4.2.5).

T_j = the outdoor bin temperature, °F. Outdoor temperatures are ''binned'' such that calculations are only performed based one temperature within the bin. Bins of 5 °F are used.

$n_j / N=$

Fractional bin hours for the heating season; the ratio of the number of hours during the heating season when the outdoor temperature fell within the range represented by bin temperature T_j to the total number of hours

in the heating season, dimensionless. Obtain n_j/N values from Table 17.

j = the bin number, dimensionless.

J = for each generalized climatic region, the total number of temperature bins, dimensionless. Referring to Table 17, J is the highest bin number (j) having a nonzero entry for the fractional bin hours for the generalized climatic region of interest.

F_{def} = the demand defrost credit described in section 3.9.2, dimensionless.

$BL(T_j)$ = the building space conditioning load corresponding to an outdoor temperature of T_j; the heating season building load also depends on the generalized climatic region's outdoor design temperature and the design heating requirement, Btu/h.

TABLE 17—GENERALIZED CLIMATIC REGION INFORMATION

Region Number		I	II	III	IV	V	VI
Heating Load Hours, HLH		750	1250	1750	2250	2750	*2750
Outdoor Design Temperature, T_{OD}		37	27	17	5	−10	30
j	T_j (°F)	Fractional Bin Hours, n_j/N					
1	62	.291	.215	.153	.132	.106	.113
2	57	.239	.189	.142	.111	.092	.206
3	52	.194	.163	.138	.103	.086	.215
4	47	.129	.143	.137	.093	.076	.204
5	42	.081	.112	.135	.100	.078	.141
6	37	.041	.088	.118	.109	.087	.076
7	32	.019	.056	.092	.126	.102	.034
8	27	.005	.024	.047	.087	.094	.008
9	22	.001	.008	.021	.055	.074	.003
10	17	0	.002	.009	.036	.055	0
11	12	0	0	.005	.026	.047	0
12	7	0	0	.002	.013	.038	0
13	2	0	0	.001	.006	.029	0
14	−3	0	0	0	.002	.018	0
15	−8	0	0	0	.001	.010	0
16	−13	0	0	0	0	.005	0
17	−18	0	0	0	0	.002	0
18	−23	0	0	0	0	.001	0

*Pacific Coast Region.

Evaluate the building heating load using

$$BL(T_j) = \frac{(65 - T_j)}{65 - T_{OD}} \cdot C \cdot DHR \qquad (4.2\text{-}2)$$

where,

T_{OD} = the outdoor design temperature, °F. An outdoor design temperature is specified for each generalized climatic region in Table 17.

C = 0.77, a correction factor which tends to improve the agreement between calculated and measured building loads, dimensionless.

DHR = the design heating requirement (see Definition 1.22), Btu/h.

Calculate the minimum and maximum design heating requirements for each generalized climatic region as follows:

$$DHR_{min} = \left\{ \begin{array}{ll} \dot{Q}_h^k(47) \cdot \left[\dfrac{65 - T_{OD}}{60}\right], & \text{for Regions I, II, III, IV, \& VI} \\ \dot{Q}_h^k(47), & \text{for Region V} \end{array} \right\} \text{Rounded to the nearest standardized DHR given in Table 18.}$$

and

$$DHR_{max} = \begin{cases} 2 \cdot \dot{Q}_h^k(47) \cdot \left[\dfrac{65 - T_{OD}}{60}\right], & \text{for Regions I, II, III, IV, \& VI} \\ 2.2 \cdot \dot{Q}_h^k(47), & \text{for Region V} \end{cases} \quad \text{Rounded to the nearest standardized DHR given in Table 18.}$$

where $\dot{Q}_h^k(47)$ is expressed in units of Btu/h and otherwise defined as follows:

1. For a single-speed heat pump tested as per section 3.6.1, $\dot{Q}_h^k(47) = \dot{Q}_h(47)$, the space heating capacity determined from the H1 Test.
2. For a variable-speed heat pump, a section 3.6.2 single-speed heat pump, or a two-capacity heat pump not covered by item 3, $\dot{Q}_h^k(47) = \dot{Q}_h^{k=2}(47)$, the space heating capacity determined from the $H1_2$ Test.
3. For two-capacity, northern heat pumps (see Definition 1.46), $\dot{Q}^k_h(47) = \dot{Q}^{k=1}_h(47)$, the space heating capacity determined from the $H1_1$ Test.

If the optional $H1_N$ Test is conducted on a variable-speed heat pump, the manufacturer has the option of defining $\dot{Q}^k_h(47)$ as specified above in item 2 or as $\dot{Q}^k_h(47)=\dot{Q}^{k=N}_h(47)$, the space heating capacity determined from the $H1_N$ Test.

For all heat pumps, HSPF accounts for the heating delivered and the energy consumed by auxiliary resistive elements when operating below the balance point. This condition occurs when the building load exceeds the space heating capacity of the heat pump condenser. For HSPF calculations for all heat pumps, see either section 4.2.1, 4.2.2, 4.2.3, or 4.2.4, whichever applies.

For heat pumps with heat comfort controllers (see Definition 1.28), HSPF also accounts for resistive heating contributed when operating above the heat-pump-plus-comfort-controller balance point as a result of maintaining a minimum supply temperature. For heat pumps having a heat comfort controller, see section 4.2.5 for the additional steps required for calculating the HSPF.

TABLE 18—STANDARDIZED DESIGN HEATING REQUIREMENTS (BTU/H)

5,000	25,000	50,000	90,000
10,000	30,000	60,000	100,000
15,000	35,000	70,000	110,000
20,000	40,000	80,000	130,000

4.2.1 Additional steps for calculating the HSPF of a heat pump having a single-speed compressor that was tested with a fixed-speed indoor fan installed, a constant-air-volume-rate indoor fan installed, or with no indoor fan installed.

$$\frac{e_h(T_j)}{N} = \frac{X(T_j) \cdot \dot{E}_h(T_j) \cdot \delta(T_j)}{PLF_j} \cdot \frac{n_j}{N} \qquad (4.2.1\text{-}1)$$

$$\frac{RH(T_j)}{N} = \frac{BL(T_j) - \left[X(T_j) \cdot \dot{Q}_h(T_j) \cdot \delta(T_j)\right]}{3.413 \dfrac{Btu/h}{W}} \cdot \frac{n_j}{N} \qquad (4.2.1\text{-}2)$$

where,

$$X(T_j) = \begin{cases} BL(T_J) / \dot{Q}_h(T_j) \\ \text{or} \\ 1 \end{cases}$$

whichever is less; the heating mode load factor for temperature bin j, dimensionless.

$\dot{Q}_h(T_j)$ = the space heating capacity of the heat pump when operating at outdoor temperature T_j, Btu/h.

$\dot{E}_h(T_j)$ = the electrical power consumption of the heat pump when operating at outdoor temperature T_j, W.

$\delta(T_j)$ = the heat pump low temperature cut-out factor, dimensionless.

$PLF_j = 1 - \dot{C}_D^h \cdot [1 - X(T_j)]$ the part load factor, dimensionless.

Use Equation 4.2–2 to determine $BL(T_j)$. Obtain fractional bin hours for the heating season, n_j/N, from Table 17. If the optional H1C Test described in section 3.6.1 is not conducted, set the heating mode cyclic degradation coefficient, C_D^h, to the default value specified in section 3.8.1. If this optional test is conducted, set $\dot{C}_D^h$ to the lower of:

a. The value calculated according to section 3.8.1 or

b. The section 3.8.1 default value of 0.25.

Determine the low temperature cut-out factor using

$$\delta(T_j) = \begin{cases} 0, \text{ if } T_j \le T_{off} \text{ or } \dfrac{\dot{Q}_h(T_j)}{3.413 \cdot \dot{E}_h(T_j)} < 1 \\ 1/2, \text{ if } T_{off} < T_j \le T_{on} \text{ and } \dfrac{\dot{Q}_h(T_j)}{3.413 \cdot \dot{E}_h(T_j)} \ge 1 \\ 1, \text{ if } T_j > T_{on} \text{ and } \dfrac{\dot{Q}_h(T_j)}{3.413 \cdot \dot{E}_h(T_j)} \ge 1 \end{cases} \qquad (4.2.1\text{-}3)$$

where,

T_{off} = the outdoor temperature when the compressor is automatically shut off, °F. (If no such temperature exists, T_j is always greater than T_{off} and T_{on}).

T_{on} = the outdoor temperature when the compressor is automatically turned back on, if applicable, following an automatic shut-off, °F.

Calculate $\dot{Q}_h(T_j)$ and $\dot{E}_h(T_j)$ using,

$$\dot{Q}_h(T_j) = \begin{cases} \dot{Q}_h(17) + \dfrac{[\dot{Q}_h(47) - \dot{Q}_h(17)] \cdot (T_j - 17)}{47 - 17}, \text{ if } T_j \ge 45\ °F \text{ or } T_j \le 17\ °F \\ \dot{Q}_h(17) + \dfrac{[\dot{Q}_h(35) - \dot{Q}_h(17)] \cdot (T_j - 17)}{35 - 17}, \text{ if } 17\ °F < T_j < 45\ °F \end{cases} \qquad (4.2.1\text{-}4)$$

$$\dot{E}_h(T_j) = \begin{cases} \dot{E}_h(17) + \dfrac{[\dot{E}_h(47) - \dot{E}_h(17)] \cdot (T_j - 17)}{47 - 17}, \text{ if } T_j \ge 45\ °F \text{ or } T_j \le 17\ °F \\ \dot{E}_h(17) + \dfrac{[\dot{E}_h(35) - \dot{E}_h(17)] \cdot (T_j - 17)}{35 - 17}, \text{ if } 17\ °F < T_j < 45\ °F \end{cases} \qquad (4.2.1\text{-}5)$$

where $\dot{Q}_h(47)$ and $\dot{E}_h(47)$ are determined from the H1 Test and calculated as specified in section 3.7; $\dot{Q}_h(35)$ and $\dot{E}_h(35)$ are determined from the H2 Test and calculated as specified in section 3.9.1; and $\dot{Q}_h(17)$ and $\dot{E}_h(17)$ are determined from the H3 Test and calculated as specified in section 3.10.

4.2.2 Additional steps for calculating the HSPF of a heat pump having a single-speed compressor and a variable-speed, variable-air-volume-rate indoor fan. The manufacturer must provide information about how the indoor air volume rate or the indoor fan speed varies over the outdoor temperature

range of 65 °F to −23 °F. Calculate the quantities

$$\frac{e_h(T_j)}{N} \text{ and } \frac{RH(T_j)}{N}$$

in Equation 4.2–1 as specified in section 4.2.1 with the exception of replacing references to the H1C Test and section 3.6.1 with the $H1C_1$ Test and section 3.6.2. In addition, evaluate the space heating capacity and electrical power consumption of the heat pump $\dot{Q}_h(T_j)$ and $\dot{E}_h(T_j)$ using

$$\dot{Q}_h(T_j) = \dot{Q}_h^{k=1}(T_j) + \frac{\dot{Q}_h^{k=2}(T_j) - \dot{Q}_h^{k=1}(T_j)}{FP_h^{k=2} - FP_h^{k=1}} \cdot \left[FP_h(T_j) - FP_h^{k=1}\right] \qquad (4.2.2\text{-}1)$$

$$\dot{E}_h(T_j) = \dot{E}_h^{k=1}(T_j) + \frac{\dot{E}_h^{k=2}(T_j) - \dot{E}_h^{k=1}(T_j)}{FP_h^{k=2} - FP_h^{k=1}} \cdot \left[FP_h(T_j) - FP_h^{k=1}\right] \qquad (4.2.2\text{-}2)$$

where the space heating capacity and electrical power consumption at both low capacity (k=1) and high capacity (k=2) at outdoor temperature Tj are determined using

$$\dot{Q}_h^k(T_j) = \begin{cases} \dot{Q}_h^k(17) + \dfrac{\left[\dot{Q}_h^k(47) - \dot{Q}_h^k(17)\right] \cdot (T_j - 17)}{47 - 17}, & \text{if } T_j \geq 45\ °F \text{ or } T_j \leq 17\ °F \\ \dot{Q}_h^k(17) + \dfrac{\left[\dot{Q}_h^k(35) - \dot{Q}_h^k(17)\right] \cdot (T_j - 17)}{35 - 17}, & \text{if } 17\ °F < T_j < 45\ °F \end{cases} \qquad (4.2.2\text{-}3)$$

$$\dot{E}_h^k(T_j) = \begin{cases} E_h^k(17) + \dfrac{\left[\dot{E}_h^k(47) - \dot{E}_h^k(17)\right] \cdot (T_j - 17)}{47 - 17}, & \text{if } T_j \geq 45\ °F \text{ or } T_j \leq 17\ °F \\ \dot{E}_h^k(17) + \dfrac{\left[\dot{E}_h^k(35) - \dot{E}_h^k(17)\right] \cdot (T_j - 17)}{35 - 17}, & \text{if } 17\ °F < T_j < 45\ °F \end{cases} \qquad (4.2.2\text{-}4)$$

For units where indoor fan speed is the primary control variable, $FP_h^{k=1}$ denotes the fan speed used during the required $H1_1$ and $H3_1$ Tests (see Table 10), $FP_h^{k=2}$ denotes the fan speed used during the required $H1_2$, $H2_2$, and $H3_2$ Tests, and $FP_h(T_j)$ denotes the fan speed used by the unit when the outdoor temperature equals T_j. For units where indoor air volume rate is the primary control variable, the three FP_h's are similarly defined only now being expressed in terms of air volume rates rather than fan speeds. Determine $\dot{Q}_h^{k=1}(47)$ and $\dot{E}_h^{k=1}(47)$ from the $H1_1$ Test, and $\dot{Q}_h^{k=2}(47)$ and $\dot{E}_h^{k=2}(47)$ from the $H1_2$ Test. Calculate all four quantities as specified in section 3.7. Determine $\dot{Q}_h^{k=1}(35)$ and $\dot{E}_h^{k=1}(35)$ as specified in section 3.6.2; determine $\dot{Q}_h^{k=2}(35)$ and $\dot{E}_h^{k=2}(35)$ and from the $H2_2$ Test and the calculation specified in section 3.9. Determine $\dot{Q}_h^{k=1}(17)$ and $\dot{E}_h^{k=1}(17$ from the $H3_1$ Test, and $\dot{Q}_h^{k=2}(17)$ and $\dot{E}_h^{k=2}(17)$ from the $H3_2$ Test. Calculate all four quantities as specified in section 3.10.

4.2.3 Additional steps for calculating the HSPF of a heat pump having a two-capacity compressor. The calculation of the Equation 4.2–1 quantities

$$\frac{e_h(T_j)}{N} \text{ and } \frac{RH(T_j)}{N}$$

differs depending upon whether the heat pump would operate at low capacity (section 4.2.3.1), cycle between low and high capacity (Section 4.2.3.2), or operate at high capacity (sections 4.2.3.3 and 4.2.3.4) in responding to the building load. For heat pumps that lock out low capacity operation at low outdoor temperatures, the manufacturer must supply

information regarding the cutoff temperature(s) so that the appropriate equations can be selected.

a. Evaluate the space heating capacity and electrical power consumption of the heat pump when operating at low compressor capacity and outdoor temperature T_j using

$$\dot{Q}_h^{k=1}(T_j) = \begin{cases} \dot{Q}_h^{k=1}(47) + \dfrac{\left[\dot{Q}_h^{k=1}(62) - \dot{Q}_h^{k=1}(47)\right]\cdot(T_j - 47)}{62-47}, \text{if } T_j \geq 40\ °F \\ \dot{Q}_h^{k=1}(17) + \dfrac{\left[\dot{Q}_h^{k=1}(35) - \dot{Q}_h^{k=1}(17)\right]\cdot(T_j - 17)}{35-17}, \text{if } 17\ °F \leq T_j < 40\ °F \\ \dot{Q}_h^{k=1}(17) + \dfrac{\left[\dot{Q}_h^{k=1}(47) - \dot{Q}_h^{k=1}(17)\right]\cdot(T_j - 17)}{47-17}, \text{if } T_j < 17\ °F \end{cases}$$

$$\dot{E}_h^{k=1}(T_j) = \begin{cases} \dot{E}_h^{k=1}(47) + \dfrac{\left[\dot{E}_h^{k=1}(62) - \dot{E}_h^{k=1}(47)\right]\cdot(T_j - 47)}{62-47}, \text{ if } T_j \geq 40\ °F \\ \dot{E}_h^{k=1}(17) + \dfrac{\left[\dot{E}_h^{k=1}(35) - \dot{E}_h^{k=1}(17)\right]\cdot(T_j - 17)}{35-17}, \text{ if } 17\ °F \leq T_j < 40\ °F \\ \dot{E}_h^{k=1}(17) + \dfrac{\left[\dot{E}_h^{k=1}(47) - \dot{E}_h^{k=1}(17)\right]\cdot(T_j - 17)}{47-17}, \text{ if } T_j < 17\ °F \end{cases}$$

b. Evaluate the space heating capacity and electrical power consumption ($\dot{Q}_h^{k=2}(T_j)$ and $\dot{E}_h^{k=2}(T_j)$) of the heat pump when operating at high compressor capacity and outdoor temperature Tj by solving Equations 4.2.2–3 and 4.2.2–4, respectively, for k=2. Determine $\dot{Q}_h^{k=1}(62)$ and $\dot{E}_h^{k=1}(62)$ from the $H0_1$ Test, $\dot{Q}_h^{k=1}(47)$ and $\dot{E}_h^{k=1}(47)$ from the $H1_1$ Test, and $\dot{Q}_h^{k=2}(47)$ and $\dot{E}_h^{k=2}(47)$ from the $H1_2$ Test. Calculate all six quantities as specified in section 3.7. Determine $\dot{Q}_h^{k=2}(35)$ and $\dot{E}_h^{k=2}(35)$ from the $H2_2$ Test and, if required as described in section 3.6.3, determine $\dot{Q}_h^{k=1}(35)$ and $\dot{E}_h^{k=1}(35)$ from the $H2_1$ Test. Calculate the required 35 °F quantities as specified in section 3.9. Determine $\dot{Q}_h^{k=2}(17)$ and $\dot{E}_h^{k=2}(17)$ from the $H3_2$ Test and, if required as described in section 3.6.3, determine $\dot{Q}_h^{k=1}(17)$ and $\dot{E}_h^{k=1}(17)$ from the $H3_1$ Test. Calculate the required 17 °F quantities as specified in section 3.10.

4.2.3.1 Steady-state space heating capacity when operating at low compressor capacity is greater than or equal to the building heating load at temperature T_j, $\dot{Q}_h^{k=1}(T_j) \geq BL(T_j)$.

$$\frac{e_h(T_j)}{N} = \frac{X^{k=1}(T_j)\cdot\dot{E}_h^{k=1}(T_j)\cdot\delta'(T_j)}{PLF_j}\cdot\frac{n_j}{N} \qquad (4.2.3\text{-}1)$$

$$\frac{RH(T_j)}{N} = \frac{BL(T_j)\cdot\left[1-\delta'(T_j)\right]}{3.413\,\dfrac{Btu/h}{W}}\cdot\frac{n_j}{N} \qquad (4.2.3\text{-}2)$$

where,

$X^{k=1}(T_j) = BL(T_j) / \dot{Q}_h^{k=1}(T_j)$, the heating mode low capacity load factor for temperature bin *j*, dimensionless.

$PLF_j = 1 - C_D^h \cdot [\,1 - X^{k=1}(T_j)\,]$, the part load factor, dimensionless.

$\delta'(T_j)$ = the low temperature cutoff factor, dimensionless.

If the optional $H0C_1$ Test described in section 3.6.3 is not conducted, set the heating mode cyclic degradation coefficient, C_D^h, to the default value specified in section 3.8.1. If this optional test is conducted, set C_D^h to the lower of:

a. The value calculated according to section 3.8.1; or

b. The section 3.8.1 default value of 0.25.

Determine the low temperature cut-out factor using

$$\delta'(T_j) = \begin{cases} 0, & \text{if } T_j \le T_{off} \\ 1/2, & \text{if } T_{off} < T_j \le T_{on} \\ 1, & \text{if } T_j > T_{on} \end{cases} \qquad (4.2.3\text{-}3)$$

where T_{off} and T_{on} are defined in section 4.2.1. Use the calculations given in section 4.2.3.3, and not the above, if:

(a) The heat pump locks out low capacity operation at low outdoor temperatures and

(b) T_j is below this lockout threshold temperature.

4.2.3.2 Heat pump alternates between high (k=2) and low (k=1) compressor capacity to satisfy the building heating load at a temperature T_j, $\dot{Q}_h^{k=1}(T_j) < BL(T_j) < \dot{Q}_h^{k=2}(T_j)$. Calculate

$$\frac{RH(T_j)}{N}$$

using Equation 4.2.3–2. Evaluate

$$\frac{e_h(T_j)}{N}$$

using

$$\frac{e_h(T_j)}{N} = \left[X^{k=1}(T_j) \cdot \dot{E}_h^{k=1}(T_j) + X^{k=2}(T_j) \cdot \dot{E}_h^{k=2}(T_j)\right] \cdot \delta'(T_j) \cdot \frac{n_j}{N}$$

where,

$$X^{k=1}(T_j) = \frac{\dot{Q}_h^{k=2}(T_j) - BL(T_j)}{\dot{Q}_h^{k=2}(T_j) - \dot{Q}_h^{k=1}(T_j)}$$

$X^{k=2}(T_j) = 1 - X^{k=1}(T_j)$ the heating mode, high capacity load factor for temperature bin $_j$, dimensionless.

Determine the low temperature cut-out factor, $\delta'(T_j)$, using Equation 4.2.3–3.

4.2.3.3 Heat pump only operates at high (k=2) compressor capacity at temperature T_j and its capacity is greater than the building heating load, $BL(T_j) < \dot{Q}_h^{k=2}(T_j)$. This section applies to units that lock out low compressor capacity operation at low outdoor temperatures. Calculate

$$\frac{RH(T_j)}{N}$$

using Equation 4.2.3–2. Evaluate

$$\frac{e_h(T_j)}{N}$$

using

$$\frac{e_h(T_j)}{N} = \frac{X^{k=2}(T_j) \cdot \dot{E}_h^{k=2}(T_j) \cdot \delta'(T_j)}{PLF_j} \cdot \frac{n_j}{N}$$

where,

$X^{k=2}(T_j) = BL(T_j)/\dot{Q}_h^{k=2}(T_j)$.

$$PLF_j = 1 - C_D^h(k=2) \cdot \left[1 - X^{k=2}(T_j)\right].$$

If the optional $H1C_2$ Test described in section 3.6.3 and Table 11 is not conducted, set C_D^h (k=2) equal to the default value specified in section 3.8.1. If this optional test is conducted, set C_D^h (k=2) to the lower of:

a. the C_D^h (k=2) value calculated as per section 3.8.1; or

b. the section 3.8.1 default value for C_D^h (k=2).

Determine the low temperature cut-out factor, $\delta(T_j)$, using Equation 4.2.3–3.

4.2.3.4 Heat pump must operate continuously at high (k=2) compressor capacity at temperature T_j, $BL(T_j) \geq \dot{Q}_h^{k=2}(T_j)$.

$$\frac{e_h(T_j)}{N} = \dot{E}_h^{k=2}(T_j) \cdot \delta''(T_j) \cdot \frac{n_j}{N}$$

$$\frac{RH(T_j)}{N} = \frac{BL(T_j) - \left[\dot{Q}_h^{k=2}(T_j) \cdot \delta''(T_j)\right]}{3.413\ \frac{Btu/h}{W}} \cdot \frac{n_j}{N}$$

Where

$$\delta''(T_j) = \begin{cases} 0, & \text{if } T_j \leq T_{off} \text{ or } \dfrac{\dot{Q}_h^{k=2}(T_j)}{3.413 \cdot \dot{E}_h^{k=2}(T_j)} < 1 \\ 1/2, & \text{if } T_{off} < T_j \leq T_{on} \text{ and } \dfrac{\dot{Q}_h^{k=2}(T_j)}{3.413 \cdot \dot{E}_h^{k=2}(T_j)} \geq 1 \\ 1, & \text{if } T_j > T_{on} \text{ and } \dfrac{\dot{Q}_h^{k=2}(T_j)}{3.413 \cdot \dot{E}_h^{k=2}(T_j)} \geq 1 \end{cases}$$

4.2.4 Additional steps for calculating the HSPF of a heat pump having a variable-speed compressor. Calculate HSPF using Equation 4.2–1. Evaluate the space heating capacity, $\dot{Q}_h^{k=1}(T_j)$, and electrical power consumption, $\dot{E}_h^{k=1}(T_j)$, of the heat pump when operating at minimum compressor speed and outdoor temperature T_j using

$$\dot{Q}_h^{k=1}(T_j) = \dot{Q}_h^{k=1}(47) + \frac{\dot{Q}_h^{k=1}(62) - \dot{Q}_h^{k=1}(47)}{62 - 47} \cdot (T_j - 47) \qquad (4.2.4\text{-}1)$$

$$\dot{E}_h^{k=1}(T_j) = \dot{E}_h^{k=1}(47) + \frac{\dot{E}_h^{k=1}(62) - \dot{E}_h^{k=1}(47)}{62 - 47} \cdot (T_j - 47) \qquad (4.2.4\text{-}2)$$

where $\dot{Q}_h^{k=1}(62)$ and $\dot{E}_h^{k=1}(62)$ are determined from the $H0_1$ Test, $\dot{Q}_h^{k=1}(47)$ and $\dot{E}_h^{k=1}(47)$ are determined from the $H1_1$ Test, and all four quantities are calculated as specified in section 3.7. Evaluate the space heating capacity, $\dot{Q}_h^{k=2}(T_j)$, and electrical power consumption, $\dot{E}_h^{k=2}(T_j)$, of the heat pump when operating at maximum compressor speed and outdoor temperature T_j by solving Equations 4.2.2–3 and 4.2.2–4, respectively, for k=2. Determine the Equation 4.2.2–3 and 4.2.2–4 quantities $\dot{Q}_h^{k=2}(47)$ and $\dot{E}_h^{k=2}(47)$ from the $H1_2$ Test and the calculations specified in section 3.7. Determine $\dot{Q}_h^{k=2}(35)$ and $\dot{E}_h^{k=2}(35)$ from the $H2_2$ Test and the calculations specified in section 3.9 or, if the $H2_2$ Test is not conducted, by conducting the calculations specified in section 3.6.4. Determine $\dot{Q}_h^{k=2}(17)$ and $\dot{E}_h^{k=2}(17)$ from the $H3_2$ Test and the calculations specified in section 3.10. Calculate the space heating capacity, $\dot{Q}_h^{k=v}(T_j)$, and electrical power consumption, $\dot{E}_h^{k=v}(T_j)$, of the heat pump when operating at outdoor temperature T_j and the intermediate compressor speed used during the section 3.6.4 $H2_V$ Test using

$$\dot{Q}_h^{k=v}\left(T_j\right) = \dot{Q}_h^{k=v}(35) + M_Q \cdot \left(T_j - 35\right) \qquad (4.2.4\text{-}3)$$

$$\dot{E}_h^{k=v}\left(T_j\right) = \dot{E}_h^{k=v}(35) + M_E \cdot \left(T_j - 35\right) \qquad (4.2.4\text{-}4)$$

where $\dot{Q}_h^{k=v}(35)$ and $\dot{E}_h^{k=v}(35)$ are determined from the $H2_V$ Test and calculated as specified in section 3.9. Approximate the slopes of the k=v intermediate speed heating capacity and electrical power input curves, M_Q and M_E, as follows:

$$M_Q = \left[\frac{\dot{Q}_h^{k=1}(62) - \dot{Q}_h^{k=1}(47)}{62-47} \cdot \left(1 - N_Q\right)\right] + \left[N_Q \cdot \frac{\dot{Q}_h^{k=2}(35) - \dot{Q}_h^{k=2}(17)}{35-17}\right]$$

$$M_E = \left[\frac{\dot{E}_h^{k=1}(62) - \dot{E}_h^{k=1}(47)}{62-47} \cdot \left(1 - N_E\right)\right] + \left[N_E \cdot \frac{\dot{E}_h^{k=2}(35) - \dot{E}_h^{k=2}(17)}{35-17}\right]$$

where,

$$N_Q = \frac{\dot{Q}_h^{k=v}(35) - \dot{Q}_h^{k=1}(35)}{\dot{Q}_h^{k=2}(35) - \dot{Q}_h^{k=1}(35)}, \text{ and}$$

$$N_E = \frac{\dot{E}_h^{k=v}(35) - \dot{E}_h^{k=1}(35)}{\dot{E}_h^{k=2}(35) - \dot{E}_h^{k=1}(35)}.$$

Use Equations 4.2.4–1 and 4.2.4–2, respectively, to calculate $\dot{Q}_h^{k=1}(35)$ and $\dot{E}_h^{k=1}(35)$.

The calculation of Equation 4.2–1 quantities

$$\frac{e_h\left(T_j\right)}{N} \text{ and } \frac{RH\left(T_j\right)}{N}$$

differs depending upon whether the heat pump would operate at minimum speed (section 4.2.4.1), operate at an intermediate speed (section 4.2.4.2), or operate at maximum speed (section 4.2.4.3) in responding to the building load.

4.2.4.1 Steady-state space heating capacity when operating at minimum compressor speed is greater than or equal to the building heating load at temperature T_j, $\dot{Q}_h^{k=1}(T_j \geq BL(T_j))$. Evaluate the Equation 4.2–1 quantities

$$\frac{e_h\left(T_j\right)}{N} \text{ and } \frac{RH\left(T_j\right)}{N}$$

as specified in section 4.2.3.1. Except now use Equations 4.2.4–1 and 4.2.4–2 to evaluate $\dot{Q}_h^{k=1}(T_j)$ and $\dot{E}_h^{k=1}(T_j)$, respectively, and replace section 4.2.3.1 references to ''low capacity'' and section 3.6.3 with ''minimum speed'' and section 3.6.4. Also, the last sentence of section 4.2.3.1 does not apply.

4.2.4.2 Heat pump operates at an intermediate compressor speed (k=i) in order to match the building heating load at a temperature T_j, $\dot{Q}_h^{k=1}(T_j) < BL(T_j) < \dot{Q}_h^{k=2}(T_j)$. Calculate

$$\frac{RH\left(T_j\right)}{N}$$

using Equation 4.2.3–2 while evaluating

$$\frac{e_h\left(T_j\right)}{N}$$

using,

$$\frac{e_h\left(T_j\right)}{N} = \dot{E}_h^{k=1}\left(T_j\right) \cdot \delta'\left(T_j\right) \cdot \frac{n_j}{N}$$

where,

$$\dot{E}_h^{k=i}\left(T_j\right) = \frac{\dot{Q}_h^{k=i}\left(T_j\right)}{3.413\ \frac{Btu/h}{W} \cdot COP^{k=i}\left(T_j\right)}$$

and $\delta(T_j)$ is evaluated using Equation 4.2.3–3 while,

$\dot{Q}_h^{k=i}(T_j) = BL(T_j)$, the space heating capacity delivered by the unit in matching the building load at temperature (T_j), Btu/h. The matching occurs with the heat pump operating at compressor speed k=i.

$COP^{k=i}(T_j)$ = the steady-state coefficient of performance of the heat pump when operating at compressor speed k=i and temperature T_j, dimensionless.

For each temperature bin where the heat pump operates at an intermediate compressor speed, determine $COP^{k=i}(T_j)$ using,

$$COP^{k=i}(T_j) = A + B \cdot T_j + C \cdot T_j^2.$$

For each heat pump, determine the coefficients A, B, and C by conducting the following calculations once:

$$D = \frac{T_3^2 - T_4^2}{T_{vh}^2 - T_4^2}$$

$$B = \frac{COP^{k=2}(T_4) - COP^{k=1}(T_3) - D \cdot \left[COP^{k=2}(T_4) - COP^{k=v}(T_{vh})\right]}{T_4 - T_3 - D \cdot (T_4 - T_{vh})}$$

where,

T_3 = the outdoor temperature at which the heat pump, when operating at minimum compressor speed, provides a space heating capacity that is equal to the building load ($\dot{Q}_h^{k=1}(T_3) = BL(T_3)$), °F. Determine T_3 by equating Equations 4.2.4–1 and 4.2–2 and solving for:

$$C = \frac{COP^{k=2}(T_4) - COP^{k=1}(T_3) - B \cdot (T_4 - T_3)}{T_4^2 - T_3^2}$$

$$A = COP^{k=2}(T_4) - B \cdot T_4 - C \cdot T_4^2.$$

outdoor temperature.

T_{vh} = the outdoor temperature at which the heat pump, when operating at the intermediate compressor speed used during the section 3.6.4 $H2_V$ Test, provides a space heating capacity that is equal to the building load ($\dot{Q}_h^{k=v}(T_{vh}) = BL(T_{vh})$), °F. Determine T_{vh} by equating Equations 4.2.4–3 and 4.2–2 and solving for outdoor temperature.

T_4 = the outdoor temperature at which the heat pump, when operating at maximum compressor speed, provides a space heating capacity that is equal to the building load ($\dot{Q}_h^{k=2}(T_4) = BL(T_4)$), °F. Determine T_4 by equating Equations 4.2.2–3 (k=2) and 4.2–2 and solving for outdoor temperature.

$$COP^{k=1}(T_3) = \frac{\dot{Q}_h^{k=1}(T_3)\left[\text{Eqn. 4.2.4-1, substituting } T_3 \text{ for } T_j\right]}{3.413\frac{\text{Btu/h}}{\text{W}} \cdot \dot{E}_h^{k=1}(T_3)\left[\text{Eqn. 4.2.4-2, substituting } T_3 \text{ for } T_j\right]}$$

$$COP^{k=v}(T_{vh}) = \frac{\dot{Q}_h^{k=v}(T_{vh})\left[\text{Eqn. 4.2.4 - 3, substituting } T_{vh} \text{ for } T_j\right]}{3.413\frac{Btu/h}{W} \cdot \dot{E}_h^{k=v}(T_{vh})\left[\text{Eqn. 4.2.4 - 4, substituting } T_{vh} \text{ for } T_j\right]}$$

$$COP^{k=2}(T_4) = \frac{\dot{Q}_h^{k=2}(T_4)\left[\text{Eqn. 4.2.2 - 3, substituting } T_4 \text{ for } T_j\right]}{3.413\frac{Btu/h}{W} \cdot \dot{E}_h^{k=2}(T_4)\left[\text{Eqn. 4.2.2 - 4, substituting } T_4 \text{ for } T_j\right]}$$

For multiple-split heat pumps (only), the following procedures supersede the above requirements for calculating $COP_h^{k=i}(T_j)$. For each temperature bin where $T_3 > T_j > T_{vh}$,

$$COP_h^{k=i}(T_j) = COP_h^{k=1}(T_3) + \frac{COP_h^{k=v}(T_{vh}) - COP_h^{k=1}(T_3)}{T_{vh} - T_3} \cdot (T_j - T_3).$$

For each temperature bin where $T_{vh} \geq T_j > T_4$,

$$COP_h^{k=i}(T_j) = COP_h^{k=v}(T_{vh}) + \frac{COP_h^{k=2}(T_4) - COP_h^{k=v}(T_{vh})}{T_4 - T_{vh}} \cdot (T_j - T_{vh}).\text{''}$$

4.2.4.3 Heat pump must operate continuously at maximum (k=2) compressor speed at temperature T_j, $BL(T_j) \geq \dot{Q}_h^{k=2}(T_j)$. Evaluate the Equation 4.2–1 quantities

$$\frac{e_h(T_j)}{N} \text{ and } \frac{RH(T_j)}{N}$$

as specified in section 4.2.3.4 with the understanding that $\dot{Q}_h^{k=2}(T_j)$ and $\dot{E}_h^{k=2}(T_j)$ correspond to maximum compressor speed operation and are derived from the results of the specified section 3.6.4 tests.

4.2.5 Heat pumps having a heat comfort controller. Heat pumps having heat comfort controllers, when set to maintain a typical minimum air delivery temperature, will cause the heat pump condenser to operate less because of a greater contribution from the resistive elements. With a conventional heat pump, resistive heating is only initiated if the heat pump condenser cannot meet the building load (*i.e.*, is delayed until a second stage call from the indoor thermostat). With a heat comfort controller, resistive heating can occur even though the heat pump condenser has adequate capacity to meet the building load (*i.e.*, both on during a first stage call from the indoor thermostat). As a result, the outdoor temperature where the heat pump compressor no longer cycles (*i.e.*, starts to run continuously), will be lower than if the heat pump did not have the heat comfort controller.

4.2.5.1 Heat pump having a heat comfort controller: additional steps for calculating the HSPF of a heat pump having a single-speed compressor that was tested with a fixed-speed indoor fan installed, a constant-air-volume-rate indoor fan installed, or with no indoor fan installed. Calculate the space heating capacity and electrical power of the heat pump without the heat comfort controller being active as specified in section 4.2.1 (Equations 4.2.1–4 and 4.2.1–5) for each outdoor bin temperature, T_j, that is listed in Table 17. Denote these capacities and electrical powers by using the subscript ''hp'' instead of ''h.'' Calculate the mass flow rate (expressed in pounds-mass of dry air per hour) and the specific heat of the indoor air (expressed in $Btu/lbm_{da} \cdot °F$) from the results of the H1 Test using:

$$\dot{m}_{da} = \overline{\dot{V}}_s \cdot 0.075\ \frac{1\text{bm}_{da}}{\text{ft}^3} \cdot \frac{60\ \text{min}}{\text{hr}} = \frac{\overline{\dot{V}}_{mx}}{v'_n \cdot \left[1 + W_n\right]} \cdot \frac{60\ \text{min}}{\text{hr}} = \frac{\overline{\dot{V}}_{mx}}{v_n} \cdot \frac{60\ \text{min}}{\text{hr}}$$

$$C_{p,da} = 0.24 + 0.444 \cdot W_n$$

where $\overline{\dot{V}}_s$, $\overline{\dot{V}}_{mx}$, v'_n (or v_n), and W_n are defined following Equation 3–1. For each outdoor bin temperature listed in Table 17, calculate the nominal temperature of the air leaving the heat pump condenser coil using,

$$T_o\left(T_j\right) = 70\ °F + \frac{\dot{Q}_{hp}\left(T_j\right)}{\dot{m}_{da} \cdot C_{p,da}}.$$

Evaluate $e_h(T_j/N)$, $RH(T_j)/N$, $X(T_j)$, PLF_j, and $\delta(T_j)$ as specified in section 4.2.1. For each bin calculation, use the space heating capacity and electrical power from Case 1 or Case 2, whichever applies.

Case 1. For outdoor bin temperatures where $T_o(T_j)$ is equal to or greater than T_{CC} (the maximum supply temperature determined according to section 3.1.9), determine $\dot{Q}_h(T_j)$ and $\dot{E}_h(T_j)$ as specified in section 4.2.1 (*i.e.*, $\dot{Q}_h(T_j) = \dot{Q}_{hp}(T_j)$ and $\dot{E}_{hp}(T_j) = \dot{E}_{hp}(T_j)$). Note: Even though $T_o(T_j) \geq T_{cc}$, resistive heating may be required; evaluate Equation 4.2.1–2 for all bins.

Case 2. For outdoor bin temperatures where $T_o(T_j) > T_{cc}$, determine $\dot{Q}_h(T_j)$ and $\dot{E}_h(T_j)$ using,

$$\dot{Q}_h\left(T_j\right) = \dot{Q}_{hp}\left(T_j\right) + \dot{Q}_{CC}\left(T_j\right)$$

$$\dot{E}_h\left(T_j\right) = \dot{E}_{hp}\left(T_j\right) + \dot{E}_{CC}\left(T_j\right)$$

where,

$$\dot{Q}_{CC}\left(T_j\right) = \dot{m}_{da} \cdot C_{p,da} \cdot \left[T_{CC} - T_o\left(T_j\right)\right]$$

$$\dot{E}_{CC}\left(T_j\right) = \frac{\dot{Q}_{CC}\left(T_j\right)}{3.413\ \frac{\text{Btu}}{\text{W} \cdot \text{h}}}$$

NOTE: Even though $T_o(T_j) < T_{cc}$, additional resistive heating may be required; evaluate Equation 4.2.1–2 for all bins.

4.2.5.2 Heat pump having a heat comfort controller: additional steps for calculating the HSPF of a heat pump having a single-speed compressor and a variable-speed, variable-air-volume-rate indoor fan. Calculate the space heating capacity and electrical power of the heat pump without the heat comfort controller being active as specified in section 4.2.2 (Equations 4.2.2–1 and 4.2.2–2) for each outdoor bin temperature, T_j, that is listed in Table 17. Denote these capacities and electrical powers by using the subscript ''hp'' instead of ''h.'' Calculate the mass flow rate (expressed in pounds-mass of dry air per hour) and the specific heat of the indoor air (expressed in $\text{Btu/lbm}_{da} \cdot °F$) from the results of the $H1_2$ Test using:

$$\dot{m}_{da} = \overline{\dot{V}}_s \cdot 0.075\ \frac{1\text{bm}_{da}}{\text{ft}^3} \cdot \frac{60\ \text{min}}{\text{hr}} = \frac{\overline{\dot{V}}_{mx}}{v'_n \cdot \left[1 + W_n\right]} \cdot \frac{60\ \text{min}}{\text{hr}} = \frac{\overline{\dot{V}}_{mx}}{v_n} \cdot \frac{60\ \text{min}}{\text{hr}}$$

$$C_{p,da} = 0.24 + 0.444 \cdot W_n$$

where $\overline{\dot{V}}_S$, $\overline{\dot{V}}_{mx}$, v'_n (or v_n), and W_n are defined following Equation 3–1. For each outdoor bin temperature listed in Table 17, calculate the nominal temperature of the air leaving the heat pump condenser coil using,

$$T_o\left(T_j\right) = 70\ °F + \frac{\dot{Q}_{hp}\left(T_j\right)}{\dot{m}_{da} \cdot C_{p,da}}.$$

Evaluate $e_h(T_j)/N$, $RH(T_j)/N$, $X(T_j)$, PLF_j, and $\delta(T_j)$ as specified in section 4.2.1 with the exception of replacing references to the H1C Test and section 3.6.1 with the $H1C_1$ Test and section 3.6.2. For each bin calculation, use the space heating capacity and electrical power from Case 1 or Case 2, whichever applies.

Case 1. For outdoor bin temperatures where $T_o(T_j)$ is equal to or greater than T_{CC} (the maximum supply temperature determined according to section 3.1.9), determine $\dot{Q}_h(T_j)$ and $\dot{E}_h(T_j)$ as specified in section 4.2.2 (*i.e.* $\dot{Q}_h(T_j) = \dot{Q}_{hp}(T_j)$ and $\dot{E}_h(T_j) = \dot{E}_{hp}(T_j)$). Note: Even though $T_o(T_j) \geq T_{CC}$, resistive heating may be required; evaluate Equation 4.2.1–2 for all bins.

Case 2. For outdoor bin temperatures where $T_o(T_j) < T_{CC}$, determine $\dot{Q}_h(T_j)$ and $\dot{E}_h(T_j)$ using,

$\dot{Q}_h(T_j) = \dot{Q}_{hp}(T_j) + \dot{Q}_{CC}(T_j)$

$\dot{E}_h(T_j) = \dot{E}_{hp}(T_j) + \dot{E}_{CC}(T_j)$

where,

$\dot{Q}_{CC}(T_j) = \dot{m}_{da} \cdot C_{p,da} \cdot [T_{CC} - T_o(T_j)]$

$$\dot{E}_{CC}\left(T_j\right) = \frac{\dot{Q}_{CC}\left(T_j\right)}{3.413\,\frac{\text{Btu}}{\text{W} \cdot \text{h}}}.$$

NOTE: Even though $T_o(T_j) < T_{cc}$, additional resistive heating may be required; evaluate Equation 4.2.1–2 for all bins.

4.2.5.3 Heat pumps having a heat comfort controller: additional steps for calculating the HSPF of a heat pump having a two-capacity compressor. Calculate the space heating capacity and electrical power of the heat pump without the heat comfort controller being active as specified in section 4.2.3 for both high and low capacity and at each outdoor bin temperature, T_j, that is listed in Table 17. Denote these capacities and electrical powers by using the subscript ''hp'' instead of ''h.'' For the low capacity case, calculate the mass flow rate (expressed in pounds-mass of dry air per hour) and the specific heat of the indoor air (expressed in Btu/lbm_{da} · °F) from the results of the $H1_1$ Test using:

$$\dot{m}_{da}^{k=1} = \overline{\dot{V}}_s \cdot 0.075\frac{1\text{bm}_{da}}{\text{ft}^3} \cdot \frac{60\text{ min}}{\text{hr}} = \frac{\overline{\dot{V}}_{mx}}{v'_n \cdot \left[1 + W_n\right]} \cdot \frac{60\text{ min}}{\text{hr}} = \frac{\overline{\dot{V}}_{mx}}{v_n} \cdot \frac{60\text{ min}}{\text{hr}}$$

$$C_{p,da}^{k=1} = 0.24 + 0.444 \cdot W_n$$

where $\overline{\dot{V}}_s$, $\overline{\dot{V}}_{mx}$, v'_n (or v_n), and W_n are defined following Equation 3–1. For each outdoor bin temperature listed in Table 17, calculate the nominal temperature of the air leaving the heat pump condenser coil when operating at low capacity using,

$$T_o^{k=1}\left(T_j\right) = 70\text{ °F} + \frac{\dot{Q}_{hp}^{k=1}\left(T_j\right)}{\dot{m}_{da}^{k=1} \cdot C_{p,da}^{k=1}}.$$

Repeat the above calculations to determine the mass flow rate ($\dot{m}_{da}^{k=2}$) and the specific heat of the indoor air ($C_{p,da}^{k=2}$) when operating at high capacity by using the results of the $H1_2$ Test. For each outdoor bin temperature listed in Table 17, calculate the nominal temperature of the air leaving the heat pump condenser coil when operating at high capacity using,

$$T_o^{k=2}\left(T_j\right) = 70\text{ °F} + \frac{\dot{Q}_{hp}^{k=2}\left(T_j\right)}{\dot{m}_{da}^{k=2} \cdot C_{p,da}^{k=2}}.$$

Evaluate $e_h(T_j)/N$, $RH(T_j)/N$, $X^{k=1}(T_j)$, and/or $X^{k=2}(T_j)$, PLF_j, and $\delta'(T_j)$ or $\delta''(T_j)$ as specified in section 4.2.3.1. 4.2.3.2, 4.2.3.3, or 4.2.3.4, whichever applies, for each temperature bin. To evaluate these quantities, use the low-capacity space heating capacity and the low-capacity electrical power from Case 1 or Case 2, whichever applies; use the high-capacity space heating capacity and the high-capacity electrical power from Case 3 or Case 4, whichever applies.

Case 1. For outdoor bin temperatures where $T_o^{k=1}(T_j)$ is equal to or greater than T_{CC} (the maximum supply temperature determined according to section 3.1.9), determine $\dot{Q}_h^{k=1}(T_j)$ and $\dot{E}_h^{k=1}(T_j)$ as specified in section 4.2.3 (*i.e.*, $\dot{Q}_h^{k=1}(T_j) = \dot{Q}_{hp}^{k=1}(T_j)$ and $\dot{E}_h^{k=1}(T_j) = \dot{E}_{hp}^{k=1}(T_j)$.

NOTE: Even though $T_o^{k=1}(T_j) \geq T_{CC}$, resistive heating may be required; evaluate $RH(T_j)/N$ for all bins.

Case 2. For outdoor bin temperatures where $T_o^{k=1}(T_j) < T_{CC}$, determine $\dot{Q}_h^{k=1}(T_j)$ and $\dot{E}_h^{k=1}(T_j)$ using,

$\dot{Q}_h^{k=1}(T_j) = \dot{Q}_{hp}^{k=1}(T_j) + \dot{Q}_{CC}^{k=1}(T_j)$

$\dot{E}_h^{k=1}(T_j) = \dot{E}_{hp}^{k=1}(T_j) + \dot{E}_{CC}^{k=1}(T_j)$

where,

$$\dot{Q}_{CC}^{k=1}\left(T_j\right) = \dot{m}_{da}^{k=1} \cdot C_{p,da}^{k=1} \cdot \left[T_{CC} - T_o^{k=1}\left(T_j\right)\right]$$

$$\dot{E}_{CC}^{k=1}\left(T_j\right) = \frac{\dot{Q}_{CC}^{k=1}\left(T_j\right)}{3.413\,\frac{Btu}{W \cdot h}}.$$

NOTE: Even though $T_o^{k=1}(T_j) \geq T_{cc}$, additional resistive heating may be required; evaluate $RH(T_j)/N$ for all bins.

Case 3. For outdoor bin temperatures where $T_o^{k=2}(T_j)$ is equal to or greater than T_{CC}, determine $\dot{Q}_h^{k=2}(T_j)$ and $\dot{E}_h^{k=2}(T_j)$ as specified in section 4.2.3 (*i.e.*, $\dot{Q}_h^{k=2}(T_j) = \dot{Q}_{hp}^{k=2}(T_j)$ and $\dot{E}_h^{k=2}(T_j) = \dot{E}_{hp}^{k=2}(T_j)$).

NOTE: Even though $T_o^{k=2}(T_j) < T_{CC}$, resistive heating may be required; evaluate $RH(T_j)/N$ for all bins.

Case 4. For outdoor bin temperatures where $T_o^{k=2}(T_j) < T_{CC}$, determine $\dot{Q}_h^{k=2}(T_j)$ and $\dot{E}_h^{k=2}(T_j)$ using,

$$\dot{Q}_h^{k=2}\left(T_j\right) = \dot{Q}_{hp}^{k=2}\left(T_j\right) + \dot{Q}_{CC}^{k=2}\left(T_j\right)$$

$$\dot{E}_h^{k=2}\left(T_j\right) = \dot{E}_{hp}^{k=2}\left(T_j\right) + \dot{E}_{CC}^{k=2}\left(T_j\right)$$

where,

$$\dot{Q}_{CC}^{k=2}\left(T_j\right) = \dot{m}_{da}^{k=2} \cdot C_{p,da}^{k=2} \cdot \left[T_{CC} - T_o^{k=2}\left(T_j\right)\right]$$

$$\dot{E}_{CC}^{k=2}\left(T_j\right) = \frac{\dot{Q}_{CC}^{k=2}\left(T_j\right)}{3.413\,\frac{Btu}{W \cdot h}}.$$

NOTE: Even though $T_o^{k=2}(T_j) < T_{cc}$, additional resistive heating may be required; evaluate $RH(T_j)/N$ for all bins.

4.2.5.4 Heat pumps having a heat comfort controller: additional steps for calculating the HSPF of a heat pump having a variable-speed compressor. [Reserved]

4.3 Calculations of the Actual and Representative Regional Annual Performance Factors for Heat Pumps.

4.3.1 Calculation of actual regional annual performance factors (APF_A) for a particular location and for each standardized design heating requirement.

$$APF_A = \frac{CLH_A \cdot \dot{Q}_c^k(95) + HLH_A \cdot DHR \cdot C}{\frac{CLH_A \cdot \dot{Q}_c^k(95)}{SEER} + \frac{HLH_A \cdot DHR \cdot C}{HSPF}}$$

where,

CLH_A = the actual cooling hours for a particular location as determined using the map given in Figure 3, hr.

$\dot{Q}_c^k(95)$ = the space cooling capacity of the unit as determined from the A or A_2 Test, whichever applies, Btu/h.

HLH_A = the actual heating hours for a particular location as determined using the map given in Figure 2, hr.

DHR = the design heating requirement used in determining the HSPF; refer to section 4.2 and Definition 1.22, Btu/h.

C = defined in section 4.2 following Equation 4.2–2, dimensionless.

SEER = the seasonal energy efficiency ratio calculated as specified in section 4.1, Btu/W·h.

HSPF = the heating seasonal performance factor calculated as specified in section 4.2 for the generalized climatic region that includes the particular location of interest (see Figure 2), Btu/W·h. The HSPF should correspond to the actual design heating requirement (DHR), if known. If it does not, it may correspond to one of the standardized design heating requirements referenced in section 4.2.

4.3.2 Calculation of representative regional annual performance factors (APF_R) for each generalized climatic region and for each standardized design heating requirement.

$$APF_R = \frac{CLH_R \cdot \dot{Q}_c^k(95) + HLH_R \cdot DHR \cdot C}{\frac{CLH_R \cdot \dot{Q}_c^k(95)}{SEER} + \frac{HLH_R \cdot DHR \cdot C}{HSPF}}$$

where,

CLH_R = the representative cooling hours for each generalized climatic region, Table 19, hr.

HLH_R = the representative heating hours for each generalized climatic region, Table 19, hr.

HSPF = the heating seasonal performance factor calculated as specified in section 4.2 for the each generalized climatic region and for each standardized design heating requirement within each region, Btu/W.h.

The SEER, $\dot{Q}_c^k(95)$, DHR, and C are the same quantities as defined in section 4.3.1. Figure 2 shows the generalized climatic regions. Table 18 lists standardized design heating requirements.

TABLE 19—REPRESENTATIVE COOLING AND HEATING LOAD HOURS FOR EACH GENERALIZED CLIMATIC REGION

Region	CLH_R	HLH_R
I	2400	750
II	1800	1250
III	1200	1750
IV	800	2250
V	400	2750
VI	200	2750

4.4. Rounding of SEER, HSPF, and APF for reporting purposes. After calculating SEER according to section 4.1, round it off as specified in subpart B 430.23(m)(3)(i) of Title 10 of the Code of Federal Regulations. Round section 4.2 HSPF values and section 4.3 APF values as per §430.23(m)(3)(ii) and (iii) of Title 10 of the Code of Federal Regulations.

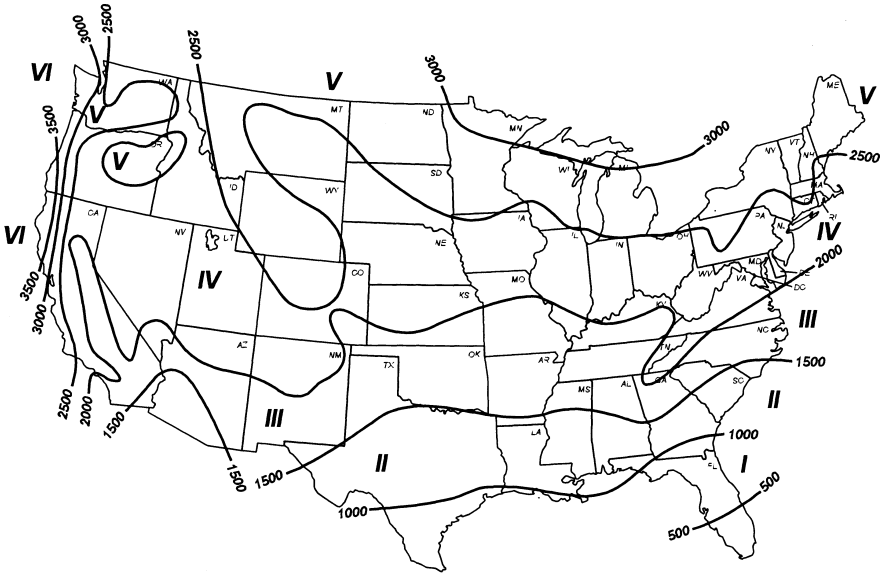

Figure 2 Heating Load Hours (HLH_A) for the United States

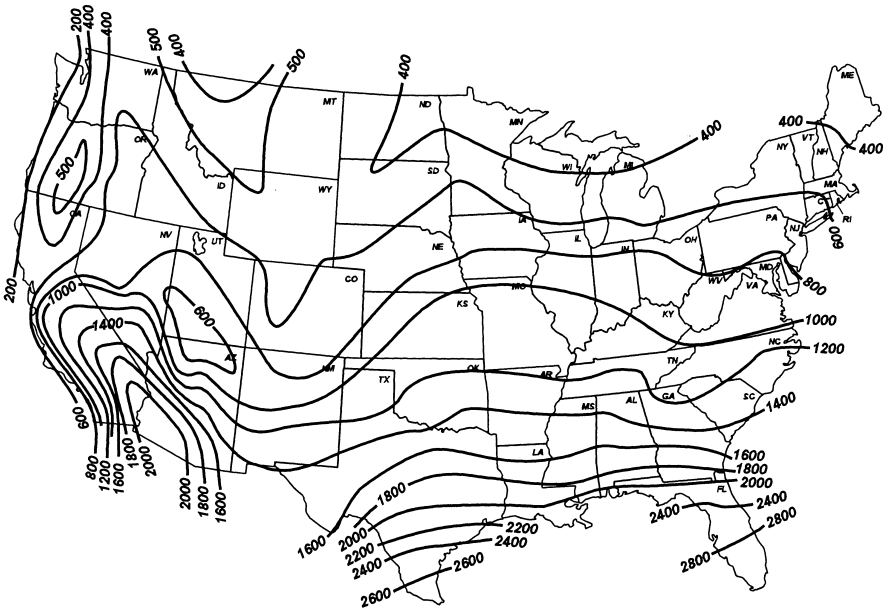

Figure 3 Cooling Load Hours (CLH_A) for the United States

[70 FR 59135, Oct. 11, 2005, as amended at 72 FR 59922, Oct. 22, 2007; 76 FR 37546, June 27, 2011]

EDITORIAL NOTE: At 72 FR 59922, Oct. 22, 2007, appendix M to subpart B of part 430 was amended; however, portions of the amendment could not be incorporated due to inaccurate amendatory instruction.

APPENDIX N TO SUBPART B OF PART 430—UNIFORM TEST METHOD FOR MEASURING THE ENERGY CONSUMPTION OF FURNACES AND BOILERS

NOTE: The procedures and calculations that refer to off mode energy consumption (*i.e.*, sections 8.6 and 10.11 of this appendix N) need not be performed to determine compliance with energy conservation standards for furnaces and boilers at this time. However, any representation related to standby mode and off mode energy consumption of these products made after July 1, 2013 must be based upon results generated under this test procedure, consistent with the requirements of 42 U.S.C. 6293(c)(2). For furnaces manufactured on or after May 1, 2013, compliance with the applicable provisions of this test procedure is required in order to determine compliance with energy conservation standards. For boilers, the statute requires that after July 1, 2010, any adopted energy conservation standard shall address standby mode and off mode energy consumption for these products, and upon the compliance date for such standards, compliance with the applicable provisions of this test procedure will be required.

1.0 Scope. The scope of this appendix is as specified in section 2.0 of ANSI/ASHRAE Standard 103–1993.

2.0 Definitions. Definitions include the definitions specified in section 3 of ANSI/ASHRAE Standard 103–1993 and the following additional and modified definitions:

2.1 *Active mode* means the condition during the heating season in which the furnace or boiler is connected to the power source, and either the burner, electric resistance elements, or any electrical auxiliaries such as blowers or pumps, are activated.

2.2 *ANSI/ASHRAE Standard 103–1993* means the test standard published in 1993 by ASHRAE, approved by the American National Standards Institute (ANSI) on October 4, 1993, and entitled ''Method of Testing for Annual Fuel Utilization Efficiency of Residential Central Furnaces and Boilers'' (with errata of October 24, 1996).

2.3 *ASHRAE* means the American Society of Heating, Refrigerating and Air-Conditioning Engineers, Inc.

2.4 *IEC 62301* means the test standard published by the International Electrotechnical Commission (IEC), titled ''Household electrical appliances—Measurement of standby power,'' Publication 62301 (Edition 2.0 2011–01). (incorporated by reference, *see* § 430.3)

2.5 *Isolated combustion system.* The definition of isolation combustion system in section 3 of ANSI/ASHRAE Standard 103–1993 is incorporated with the addition of the following: ''The unit is installed in an un-conditioned indoor space isolated from the heated space.''

2.6 *Off mode* means the condition during the non-heating season in which the furnace or boiler is connected to the power source, and neither the burner, electric resistance elements, nor any electrical auxiliaries such as blowers or pumps, are activated.

2.7 *Seasonal off switch* means the switch on the furnace or boiler that, when activated, results in a measurable change in energy consumption between the standby and off modes.

2.8 *Standby mode* means the condition during the heating season in which the furnace or boiler is connected to the power source, and neither the burner, electric resistance elements, nor any electrical auxiliaries such as blowers or pumps, are activated.

2.9 *Thermal stack damper* means a type of stack damper which is dependent for operation exclusively upon the direct conversion of thermal energy of the stack gases to open the damper.

3.0 Classifications. Classifications are as specified in section 4 of ANSI/ASHRAE Standard 103–1993.

4.0 Requirements. Requirements are as specified in section 5 of ANSI/ASHRAE Standard 103–1993.

5.0 Instruments. Instruments must be as specified in section 6 of ANSI/ASHRAE Standard 103–1993.

6.0 Apparatus. The apparatus used in conjunction with the furnace or boiler during the testing shall be as specified in section 7 of ANSI/ASHRAE Standard 103–1993 except for the second paragraph of section 7.2.2.2 and except for section 7.2.2.5, and as specified in section 6.1 of this appendix.

6.1 *Downflow furnaces.* Install the internal section of vent pipe the same size as the flue collar for connecting the flue collar to the top of the unit, if not supplied by the manufacturer. Do not insulate the internal vent pipe during the jacket loss test (if conducted) described in section 8.6 of ANSI/ASHRAE Standard 103–1993 or the steady-state test described in section 9.1 of ANSI/ASHRAE Standard 103–1993. Do not insulate the internal vent pipe before the cool-down and heat-up tests described in sections 9.5 and 9.6, respectively, of ANSI/ASHRAE Standard 103–1993. If the vent pipe is surrounded by a metal jacket, do not insulate the metal jacket. Install a 5-ft test stack of the same cross sectional area or perimeter as the vent pipe above the top of the furnace. Tape or seal around the junction connecting the vent pipe and the 5-ft test stack. Insulate the 5-ft test stack with insulation having an R-value not less than 7 and an outer layer of aluminum foil. (See Figure 3–E of ANSI/ASHRAE Standard 103–1993.)

7.0 Testing conditions. The testing conditions shall be as specified in section 8 of ANSI/ASHRAE Standard 103–1993 with errata of October 24, 1996, except for section 8.6.1.1;

and as specified in section 7.1 of this appendix.

7.1 *Measurement of jacket surface temperature.* The jacket of the furnace or boiler shall be subdivided into 6-inch squares when practical, and otherwise into 36-square-inch regions comprising 4 in. × 9 in. or 3 in. × 12 in. sections, and the surface temperature at the center of each square or section shall be determined with a surface thermocouple. The 36-square-inch areas shall be recorded in groups where the temperature differential of the 36-square-inch area is less than 10 °F for temperature up to 100 °F above room temperature and less than 20 °F for temperature more than 100 °F above room temperature. For forced air central furnaces, the circulating air blower compartment is considered as part of the duct system and no surface temperature measurement of the blower compartment needs to be recorded for the purpose of this test. For downflow furnaces, measure all cabinet surface temperatures of the heat exchanger and combustion section, including the bottom around the outlet duct, and the burner door, using the 36 square-inch thermocouple grid. The cabinet surface temperatures around the blower section do not need to be measured (See figure 3–E of ANSI/ASHRAE Standard 103–1993.)

8.0 Test procedure. Testing and measurements shall be as specified in section 9 of ANSI/ASHRAE Standard 103–1993 except for sections 9.5.1.1, 9.5.1.2.1, 9.5.1.2.2, 9.5.2.1, and section 9.7.1. ; and as specified in sections 8.1, 8.2, 8.3, 8.4, and 8.5, of this appendix.

8.1 *Input to interrupted ignition device.* For burners equipped with an interrupted ignition device, record the nameplate electric power used by the ignition device, PE_{IG}, or use PE_{IG} = 0.4 kW if no nameplate power input is provided. Record the nameplate ignition device on-time interval, t_{IG}, or measure the on-time period at the beginning of the test at the time the burner is turned on with a stop watch, if no nameplate value is given. Set t_{IG} = 0 and PE_{IG} = 0 if the device on-time is less than or equal to 5 seconds after the burner is on.

8.2 *Gas- and oil-fueled gravity and forced air central furnaces without stack dampers cool-down test.* Turn off the main burner after steady-state testing is completed, and measure the flue gas temperature by means of the thermocouple grid described in section 7.6 of ANSI/ASHRAE 103–1993 at 1.5 minutes ($T_{F,OFF}(t_3)$) and 9 minutes ($T_{F,OFF}(t_4)$) after the burner shuts off. An integral draft diverter shall remain blocked and insulated, and the stack restriction shall remain in place. On atmospheric systems with an integral draft diverter or draft hood, equipped with either an electromechanical inlet damper or an electro-mechanical flue damper that closes within 10 seconds after the burner shuts off to restrict the flow through the heat exchanger in the off-cycle, bypass or adjust the control for the electromechanical damper so that the damper remains open during the cool-down test. For furnaces that employ post purge, measure the length of the post-purge period with a stopwatch. The time from burner OFF to combustion blower OFF (electrically de-energized) shall be recorded as t_p. For the case where t_p is intended to be greater than 180 seconds, stop the combustion blower at 180 seconds and use that value for t_p. Measure the flue gas temperature by means of the thermocouple grid described in section 7.6 of ANSI/ASHRAE 103–1993 at the end of post-purge period, t_p ($T_{F,OFF}(t_p)$), and at the time (1.5 + t_p) minutes ($T_{F,OFF}(t_3)$) and (9.0 + t_p) minutes ($T_{F,OFF}(t_4)$) after the main burner shuts off. For the case where the measured tp is less than or equal to 30 seconds, it shall be tested as if there is no post purge and t_p shall be set equal to 0.

8.3 *Gas- and oil-fueled gravity and forced air central furnaces without stack dampers with adjustable fan control—cool-down test.* For a furnace with adjustable fan control, this time delay will be 3.0 minutes for non-condensing furnaces or 1.5 minutes for condensing furnaces or until the supply air temperature drops to a value of 40 °F above the inlet air temperature, whichever results in the longest fan on-time. For a furnace without adjustable fan control or with the type of adjustable fan control whose range of adjustment does not allow for the delay time specified above, the control shall be bypassed and the fan manually controlled to give the delay times specified above. For a furnace which employs a single motor to drive the power burner and the indoor air circulating blower, the power burner and indoor air circulating blower shall be stopped together.

8.4 *Gas-and oil-fueled boilers without stack dampers cool-down test.* After steady-state testing has been completed, turn the main burner(s) OFF and measure the flue gas temperature at 3.75 ($T_{F,OFF}(t_3)$) and 22.5 ($T_{F,OFF}(t_4)$) minutes after the burner shut off, using the thermocouple grid described in section 7.6 of ANSI/ASHRAE 103–1993. During this off-period, for units that do not have pump delay after shutoff, no water shall be allowed to circulate through the hot water boilers. For units that have pump delay on shutoff, except those having pump controls sensing water temperature, the pump shall be stopped by the unit control and the time t^+, between burner shutoff and pump shutoff shall be measured within one-second accuracy. For units having pump delay controls that sense water temperature, the pump shall be operated for 15 minutes and t^+ shall be 15 minutes. While the pump is operating, the inlet water temperature and flow rate shall be maintained at the same values as used during the steady-state test as specified in sections 9.1 and 8.4.2.3 of ANSI/ASHRAE 103–1993.

For boilers that employ post purge, measure the length of the post-purge period with a stopwatch. The time from burner OFF to combustion blower OFF (electrically de-energized) shall be recorded as t_P. For the case where t_P is intended to be greater than 180 seconds, stop the combustion blower at 180 seconds and use that value for t_P. Measure the flue gas temperature by means of the thermocouple grid described in section 7.6 of ANSI/ASHRAE 103–1993 at the end of the post purge period $t_P(T_{F,OFF}(t_P))$ and at the time $(3.75 + t_P)$ minutes $(T_{F,OFF}(t_3))$ and $(22.5 + t_P)$ minutes $(T_{F,OFF}(t_4))$ after the main burner shuts off. For the case where the measured t_P is less or equal to 30 seconds, it shall be tested as if there is no post purge and t_P shall be set to equal 0.

8.5 *Direct measurement of off-cycle losses testing method*. [Reserved.]

8.6 Measurement of electrical standby and off mode power.

8.6.1 Standby power measurement. With all electrical auxiliaries of the furnace or boiler not activated, measure the standby power ($P_{W,SB}$) in accordance with the procedures in IEC 62301 (incorporated by reference, *see* §430.3), except that section 8.5 *Room Ambient Temperature* of ASHRAE 103—1993 (incorporated by reference, *see* §430.3) and the voltage provision of section 8.2.1.4 *Electrical Supply* of ASHRAE 103—1993 shall apply in lieu of the corresponding provisions of IEC 62301 at section 4.2 *Test room* and the voltage specification of section 4.3 *Power supply*. Frequency shall be 60Hz. Clarifying further, IEC 62301 section 4.4 *Power measurement instruments* and section 5 *Measurements* shall apply in lieu of section 6.10 *Energy Flow Rate* of ASHRAE 103—1993. Measure the wattage so that all possible standby mode wattage for the entire appliance is recorded, not just the standby mode wattage of a single auxiliary. The recorded standby power ($P_{W,SB}$) shall be rounded to the second decimal place, and for loads greater than or equal to 10W, at least three significant figures shall be reported.

8.6.2 Off mode power measurement. If the unit is equipped with a seasonal off switch or there is an expected difference between off mode power and standby mode power, measure off mode power ($P_{W,OFF}$) in accordance with the standby power procedures in IEC 62301 (incorporated by reference, *see* §430.3), except that section 8.5 *Room Ambient Temperature* of ASHRAE 103—1993 (incorporated by reference, *see* §430.3) and the voltage provision of section 8.2.1.4 *Electrical Supply* of ASHRAE 103—1993 shall apply in lieu of the corresponding provisions of IEC 62301 at section 4.2 *Test room* and the voltage specification of section 4.3 *Power supply*. Frequency shall be 60Hz. Clarifying further, IEC 62301 section *4.4 Power measurement instruments* and section 5 *Measurements* shall apply for this measurement in lieu of section 6.10 *Energy Flow Rate* of ASHRAE 103—1993. Measure the wattage so that all possible off mode wattage for the entire appliance is recorded, not just the off mode wattage of a single auxiliary. If there is no expected difference in off mode power and standby mode power, let $P_{W,OFF} = P_{W,SB}$, in which case no separate measurement of off mode power is necessary. The recorded off mode power ($P_{W,OFF}$) shall be rounded to the second decimal place, and for loads greater than or equal to 10W, at least three significant figures shall be reported.

9.0 Nomenclature. Nomenclature shall include the nomenclature specified in section 10 of ANSI/ASHRAE Standard 103–1993 and the following additional variables:

Eff_{motor} = Efficiency of power burner motor
PE_{IG} = Electrical power to the interrupted ignition device, kW
$R_{T,a}$ = $R_{T,F}$ if flue gas is measured
= $R_{T,S}$ if stack gas is measured
$R_{T,F}$ = Ratio of combustion air mass flow rate to stoichiometric air mass flow rate
$R_{T,S}$ = Ratio of the sum of combustion air and relief air mass flow rate to stoichiometric air mass flow rate
t_{IG} = Electrical interrupted ignition device on-time, min.
$T_{a,SS,X}$ = $T_{F,SS,X}$ if flue gas temperature is measured, °F
= $T_{S,SS,X}$ if stack gas temperature is measured, °F
y_{IG} = ratio of electrical interrupted ignition device on-time to average burner on-time
y_P = ratio of power burner combustion blower on-time to average burner on-time
E_{SO} = Average annual electric standby mode and off mode energy consumption, in kilowatt-hours
$P_{W,OFF}$ = Furnace or boiler off mode power, in watts
$P_{W,SB}$ = Furnace or boiler standby mode power, in watts

10.0 *Calculation of derived results from test measurements*. Calculations shall be as specified in section 11 of ANSI/ASHRAE 103–1993 (incorporated by reference, see §430.3) and the October 24, 1996, Errata Sheet for ASHRAE 103–1993, except for sections 11.5.11.1, 11.5.11.2, and appendices B and C; and as specified in sections 10.1 through 10.11 and Figure 1 of this appendix.

10.1 *Annual fuel utilization efficiency*. The annual fuel utilization efficiency (AFUE) is as defined in sections 11.2.12 (non-condensing systems), 11.3.12 (condensing systems), 11.4.12 (non-condensing modulating systems), and 11.5.12 (condensing modulating systems) of ANSI/ASHRAE 103–1993 (incorporated by reference, see §430.3), except for the definition for the term $Effy_{HS}$ in the defining equation for AFUE. $Effy_{HS}$ is defined as:

$Effy_{HS}$ = heating seasonal efficiency as defined in sections 11.2.11 (non-condensing systems), 11.3.11 (condensing systems), 11.4.11 (non-condensing modulating systems), and 11.5.11 (condensing modulating systems) of

ANSI/ASHRAE 103–1993, except that for condensing modulating systems sections 11.5.11.1 and 11.5.11.2 are replaced by sections 10.2 and 10.3 of this appendix. $Effy_{HS}$ is based on the assumptions that all weatherized warm air furnaces or boilers are located outdoors, that warm air furnaces which are not weatherized are installed as isolated combustion systems, and that boilers which are not weatherized are installed indoors.

10.2 *Part-Load Efficiency at Reduced Fuel Input Rate.* Calculate the part-load efficiency at the reduced fuel input rate, $Effy_{U,R,}$ for condensing furnaces and boilers equipped with either step modulating or two-stage controls, expressed as a percent and defined as:

$$Effy_{U,R} = 100 - L_{L,A} + L_G - L_C - C_J L_J - \left[\frac{t_{ON}}{t_{ON} + \left(\frac{Q_P}{Q_{IN}}\right) t_{OFF}}\right] x \left(L_{S,ON} + L_{S,OFF} + L_{I,ON} + L_{I,OFF}\right)$$

If the option in section 9.10 of ASHRAE 103-1993 (incorporated by reference, see §430.3) is employed:

$$Effy_{U,R} = 100 - L_{L,A} + L_G - L_C - C_J L_J - \left[\frac{t_{ON}}{t_{ON} + \left(\frac{Q_P}{Q_{IN}}\right) t_{OFF}}\right] (C_S)(L_{S,SS})$$

Where:

$L_{L,A}$ = value as defined in section 11.2.7 of ASHRAE 103–1993,

L_G = value as defined in section 11.3.11.1 of ASHRAE 103–1993 at reduced input rate,

L_C = value as defined in section 11.3.11.2 of ASHRAE 103–1993 at reduced input rate,

L_J = value as defined in section 11.4.8.1.1 of ASHRAE 103–1993 at maximum input rate,

t_{ON} = value as defined in section 11.4.9.11 of ASHRAE 103–1993,

Q_P = pilot flame fuel input rate determined in accordance with section 9.2 of ASHRAE 103–1993 in Btu/h,

Q_{IN} = value as defined in section 11.4.8.1.1 of ASHRAE 103–1993,

t_{OFF} = value as defined in section 11.4.9.12 of ASHRAE 103–1993 at reduced input rate,

$L_{S,ON}$ = value as defined in section 11.4.10.5 of ASHRAE 103–1993 at reduced input rate,

$L_{S,OFF}$ = value as defined in section 11.4.10.6 of ASHRAE 103–1993 at reduced input rate,

$L_{I,ON}$ = value as defined in section 11.4.10.7 of ASHRAE 103–1993 at reduced input rate,

$L_{I,OFF}$ = value as defined in section 11.4.10.8 of ASHRAE 103–1993 at reduced input rate,

C_J = jacket loss factor and equal to:

= 0.0 for furnaces or boilers intended to be installed indoors

= 1.7 for furnaces intended to be installed as isolated combustion systems

= 2.4 for boilers (other than finned-tube boilers) intended to be installed as isolated combustion systems

= 3.3 for furnaces intended to be installed outdoors

= 4.7 for boilers (other than finned-tube boilers) intended to be installed outdoors

= 1.0 for finned-tube boilers intended to be installed outdoors

= 0.5 for finned-tube boilers intended to be installed in internal combustion system applications

$L_{S,SS}$ = value as defined in section 11.5.6 of ASHRAE 103–1993 at reduced input rate,

C_S = value as defined in section 11.5.10.1 of ASHRAE 103–1993 at reduced input rate.

10.3 *Part-Load Efficiency at Maximum Fuel Input Rate.* Calculate the part-load efficiency at maximum fuel input rate, $Effy_{U,H,}$ for condensing furnaces and boilers equipped with two-stage controls, expressed as a percent and defined as:

$$Effy_{U,H} = 100 - L_{L,A} + L_G - L_C - C_J L_J - \left[\frac{t_{ON}}{t_{ON} + \left(\frac{Q_P}{Q_{IN}}\right) t_{OFF}}\right] x \left(L_{S,ON} + L_{S,OFF} + L_{I,ON} + L_{I,OFF}\right)$$

If the option in section 9.10 of ASHRAE 103-1993 (incorporated by reference, see §430.3) is employed:

$$Effy_{U,H} = 100 - L_{L,A} + L_G - L_C - C_J L_J - \left[\frac{t_{ON}}{t_{ON} + \left(\frac{Q_P}{Q_{IN}}\right) t_{OFF}}\right] (C_S)(L_{S,SS})$$

Where:

$L_{L,A}$ = value as defined in section 11.2.7 of ASHRAE 103–1993,

L_G = value as defined in section 11.3.11.1 of ASHRAE 103–1993 at maximum input rate,

L_C = value as defined in section 11.3.11.2 of ASHRAE 103–1993 at maximum input rate,

L_J = value as defined in section 11.4.8.1.1 of ASHRAE 103–1993 at maximum input rate,

t_{ON} = value as defined in section 11.4.9.11 of ASHRAE 103–1993,

Q_P = pilot flame fuel input rate determined in accordance with section 9.2 of ASHRAE 103–1993 in Btu/h,

Q_{IN} = value as defined in section 11.4.8.1.1 of ASHRAE 103–1993,

t_{OFF} = value as defined in section 11.4.9.12 of ASHRAE 103–1993 at maximum input rate,

$L_{S,ON}$ = value as defined in section 11.4.10.5 of ASHRAE 103–1993 at maximum input rate,

$L_{S,OFF}$ = value as defined in section 11.4.10.6 of ASHRAE 103–1993 at maximum input rate,

$L_{I,ON}$ = value as defined in section 11.4.10.7 of ASHRAE 103–1993 at maximum input rate,

$L_{I,OFF}$ = value as defined in section 11.4.10.8 of ASHRAE 103–1993 at maximum input rate,

C_J = value as defined in section 10.2 of this appendix,

$L_{S,SS}$ = value as defined in section 11.5.6 of ASHRAE 103–1993 at maximum input rate,

C_S = value as defined in section 11.5.10.1 of ASHRAE 103–1993 at maximum input rate.

10.4 *National average burner operating hours, average annual fuel energy consumption, and average annual auxiliary electrical energy consumption for gas or oil furnaces and boilers.*

10.4.1 *National average number of burner operating hours.* For furnaces and boilers equipped with single stage controls, the national average number of burner operating hours is defined as:

BOH_{SS} = 2,080 (0.77) A DHR − 2,080 B

Where:

2,080 = national average heating load hours

0.77 = adjustment factor to adjust the calculated design heating requirement and heating load hours to the actual heating load experienced by the heating system

DHR = typical design heating requirements as listed in Table 8 (in unit of kBtu/h) of ANSI/ASHRAE Standard 103–1993, using the proper value of Q_{OUT} defined in 11.2.8.1 of ANSI/ASHRAE Standard 103–1993

A = 100,000/[341,300(y_P PE + y_{IG} PE_{IG} + yBE) + (Q_{IN} − Q_P)$Effy_{HS}$], for forced draft unit, indoors

= 100,000/[341,300(y_P PE Eff_{motor} + y_{IG} PE_{IG} + y BE) + (Q_{IN} − Q_P)$Effy_{HS}$], for forced draft unit, ICS,

= 100,000/[341,300(y_P PE(1 − Eff_{motor}) + y_{IG} PE_{IG} + y BE) + (Q_{IN} − Q_P)$Effy_{HS}$], for induced draft unit, indoors, and

= 100,000/[341,300(y_{IG} PE_{IG} + yBE) + (Q_{IN} − Q_P)$Effy_{HS}$], for induced draft unit, ICS

B = 2 Q_P ($Effy_{HS}$)(A)/100,000

Where:

Eff_{motor} = Power burner motor efficiency provided by manufacturer,
= 0.50, an assumed default power burner efficiency if not provided by manufacturer.
100,000 = factor that accounts for percent and kBtu
PE = burner electrical power input at full-load steady-state operation, including electrical ignition device if energized, as defined in 9.1.2.2 of ANSI/ASHRAE Standard 103–1993
y_P = ratio of induced or forced draft blower on-time to average burner on-time, as follows:
1 for units without post purge;
1 + (t_P/3.87) for single-stage furnaces with post purge;
1 + (t_P/10) for two-stage and step modulating furnaces with post purge;
1 + (t_P/9.68) for single-stage boilers with post purge; or
1 + (t_P/15) for two-stage and step modulating boilers with post purge.
PE_{IG} = electrical input rate to the interrupted ignition device on burner (if employed), as defined in 8.1 of this appendix
y_{IG} = ratio of burner interrupted ignition device on-time to average burner on-time, as follows:
0 for burners not equipped with interrupted ignition device;
(t_{IG}/3.87) for single-stage furnaces;
(t_{IG}/10) for two-stage and step modulating furnaces;
(t_{IG}/9.68) for single-stage boilers; or
(t_{IG}/15) for two-stage and step modulating boilers.
t_{IG} = on-time of the burner interrupted ignition device, as defined in 8.1 of this appendix
t_P = post purge time as defined in 8.2 (furnace) or 8.4 (boiler) of this appendix
= 0 if t_P is equal to or less than 30 seconds.
y = ratio of blower or pump on-time to average burner on-time, as follows:
1 for furnaces without fan delay;
1 for boilers without a pump delay;
1 + ($t^+ - t^-$)/3.87 for single-stage furnaces with fan delay;
1 + ($t^+ - t^-$)/10 for two-stage and step modulating furnaces with fan delay;
1 + (t^+/9.68) for single-stage boilers with pump delay; or
1 + (t^+/15) for two-stage and step modulating boilers with pump delay.
BE = circulating air fan or water pump electrical energy input rate at full-load steady-state operation, as defined in ANSI/ASHRAE Standard 103–1993
Q_{IN} = as defined in 11.2.8.1 of ANSI/ASHRAE Standard 103–1993
Q_P = as defined in 11.2.11 of ANSI/ASHRAE Standard 103–1993
$Effy_{HS}$ = as defined in 11.2.11 (non-condensing systems) or 11.3.11.3 (condensing systems) of ANSI/ASHRAE Standard 103–1993, percent, and calculated on the basis of:
ICS installation, for non-weatherized warm air furnaces;
indoor installation, for non-weatherized boilers; or
outdoor installation, for furnaces and boilers that are weatherized.
2 = ratio of the average length of the heating season in hours to the average heating load hours
t^+ = as defined in 9.5.1.2 of ANSI/ASHRAE Standard 103–1993 or 8.4 of this appendix
t^- = as defined in 9.6.1 of ANSI/ASHRAE Standard 103–1993

10.4.1.1 For furnaces and boilers equipped with two-stage or step modulating controls, the average annual energy used during the heating season, E_M, is defined as:

$$E_M = (Q_{IN} - Q_P)\ BOH_{SS} + (8{,}760 - 4{,}600)Q_P$$

Where:

Q_{IN} = as defined in 11.4.8.1.1 of ANSI/ASHRAE Standard 103–1993
Q_P = as defined in 11.4.12 of ANSI/ASHRAE Standard 103–1993
BOH_{SS} = as defined in section 10.4.1 of this appendix, in which the weighted $Effy_{HS}$ as defined in 11.4.11.3 or 11.5.11.3 of ANSI/ASHRAE Standard 103–1993 is used for calculating the values of A and B, the term DHR is based on the value of Q_{OUT} defined in 11.4.8.1.1 or 11.5.8.1.1 of ANSI/ASHRAE Standard 103–1993, and the term (y_P PE + $y_{IG}PE_{IG}$ + yBE) in the factor A is increased by the factor R, which is defined as:
R = 2.3 for two-stage controls
= 2.3 for step modulating controls when the ratio of minimum-to-maximum output is greater than or equal to 0.5
= 3.0 for step modulating controls when the ratio of minimum-to-maximum output is less than 0.5
A = 100,000/[341,300(y_P PE + y_{IG} PE_{IG} + y BE) R + (Q_{IN} $-Q_P$) $Effy_{HS}$], for forced draft unit, indoors
= 100,000/[341,300(y_P PE Eff_{motor} + y_{IG} PE_{IG} + y BE) R + (Q_{IN} $-Q_P$)$Effy_{HS}$], for forced draft unit, ICS,
= 100,000/[341,300(y_P PE(1-Eff_{motor}) + y_{IG} PE_{IG} + y BE) R + (Q_{IN} $-Q_P$) $Effy_{HS}$], for induced draft unit, indoors, and
= 100,000/[341,300(y_{IG} PE_{IG} + y BE) R + (Q_{IN} $-Q_P$) $Effy_{HS}$], for induced draft unit, ICS

Where:

Eff_{motor} = Power burner motor efficiency provided by manufacturer,
= 0.50, an assumed default power burner efficiency if none provided by manufacturer.
$Effy_{HS}$ = as defined in 11.4.11.3 or 11.5.11.3 of ANSI/ASHRAE Standard 103–1993, and calculated on the basis of:
—ICS installation, for non-weatherized warm air furnaces
—indoor installation, for non-weatherized boilers
—outdoor installation, for furnaces and boilers that are weatherized

8,760 = total number of hours per year
4,600 = as specified in 11.4.12 of ANSI/ASHRAE Standard 103–1993

10.4.1.2 For furnaces and boilers equipped with two-stage or step modulating controls, the national average number of burner operating hours at the reduced operating mode is defined as:

$BOH_R = X_R E_M/Q_{IN,R}$

Where:

X_R = as defined in 11.4.8.7 of ANSI/ASHRAE Standard 103–1993
E_M = as defined in section 10.4.1.1 of this appendix
$Q_{IN,R}$ = as defined in 11.4.8.1.2 of ANSI/ASHRAE Standard 103–1993

10.4.1.3 For furnaces and boilers equipped with two-stage controls, the national average number of burner operating hours at the maximum operating mode (BOH_H) is defined as:

$BOH_H = X_H E_M/Q_{IN}$

Where:

X_H = as defined in 11.4.8.6 of ANSI/ASHRAE Standard 103–1993
E_M = as defined in section 10.4.1.1 of this appendix
Q_{IN} = as defined in 11.4.8.1.1 of ANSI/ASHRAE Standard 103–1993

10.4.1.4 For furnaces and boilers equipped with step modulating controls, the national average number of burner operating hours at the modulating operating mode (BOH_M) is defined as:

$BOH_M = X_H E_M/Q_{IN,M}$

Where:

X_H = as defined in 11.4.8.6 of ANSI/ASHRAE Standard 103–1993
E_M = as defined in section 10.4.1.1 of this appendix
$Q_{IN,M} = Q_{OUT,M}/(Effy_{SS,M}/100)$
$Q_{OUT,M}$ = as defined in 11.4.8.10 or 11.5.8.10 of ANSI/ASHRAE Standard 103–1993, as appropriate
$Effy_{SS,M}$ = as defined in 11.4.8.8 or 11.5.8.8 of ANSI/ASHRAE Standard 103–1993, as appropriate, in percent
100 = factor that accounts for percent

10.4.2 *Average annual fuel energy consumption for gas or oil fueled furnaces or boilers.* For furnaces or boilers equipped with single-stage controls, the average annual fuel energy consumption (E_F) is expressed in Btu per year and defined as:

$E_F = BOH_{SS} (Q_{IN} - Q_P) + 8{,}760\ Q_P$

Where:

BOH_{SS} = as defined in 10.4.1 of this appendix
Q_{IN} = as defined in 11.2.8.1 of ANSI/ASHRAE Standard 103–1993
Q_P = as defined in 11.2.11 of ANSI/ASHRAE Standard 103–1993
8,760 = as specified in 10.4.1.1 of this appendix

10.4.2.1 For furnaces or boilers equipped with either two-stage or step modulating controls, E_F is defined as:

$E_F = E_M + 4{,}600 Q_P$

Where:

E_M = as defined in 10.4.1.1 of this appendix
4,600 = as specified in 11.4.12 of ANSI/ASHRAE Standard 103–1993
Q_P = as defined in 11.2.11 of ANSI/ASHRAE Standard 103–1993

10.4.3 Average annual auxiliary electrical energy consumption for gas or oil-fueled furnaces or boilers. For furnaces and boilers equipped with single-stage controls, the average annual auxiliary electrical consumption (E_{AE}) is expressed in kilowatt-hours and defined as:

$E_{AE} = BOH_{SS} (y_P\ PE + y_{IG}\ PE_{IG} + yBE) + E_{SO}$

Where:

BOH_{SS} = as defined in 10.4.1 of this appendix
PE = as defined in 10.4.1 of this appendix
y_P = as defined in 10.4.1 of this appendix
y_{IG} = as defined in 10.4.1 of this appendix
PE_{IG} = as defined in 10.4.1 of this appendix
y = as defined in 10.4.1 of this appendix
BE = as defined in 10.4.1 of this appendix
E_{SO} = as defined in 10.11 of this appendix.

10.4.3.1 For furnaces or boilers equipped with two-stage controls, E_{AE} is defined as:

$E_{AE} = BOH_R (y_P\ PE_R + y_{IG}\ PE_{IG} + yBE_R) + BOH_H (y_P\ PE_H + y_{IG}\ PE_{IG} + y\ BE_H) + E_{SO}$

Where:

BOH_R = as defined in 10.4.1.2 of this appendix
y_P = as defined in 10.4.1 of this appendix
PE_R = as defined in 9.1.2.2 and measured at the reduced fuel input rate of ANSI/ASHRAE Standard 103–1993, (incorporated by reference, *see* §430.3)
y_{IG} = as defined in 10.4.1 of this appendix
PE_{IG} = as defined in 10.4.1 of this appendix
y = as defined in 10.4.1 of this appendix
BE_R = as defined in 9.1.2.2 of ANSI/ASHRAE Standard 103–1993, (incorporated by reference, *see* §430.3) measured at the reduced fuel input rate
BOH_H = as defined in 10.4.1.3 of this appendix
PE_H = as defined in 9.1.2.2 of ANSI/ASHRAE Standard 103–1993, (incorporated by reference, *see* §430.3) measured at the maximum fuel input rate
BE_H = as defined in 9.1.2.2 of ANSI/ASHRAE Standard 103–1993, (incorporated by reference, *see* §430.3) measured at the maximum fuel input rate
E_{SO} = as defined in 10.11 of this appendix.

10.4.3.2 For furnaces or boilers equipped with step-modulating controls, E_{AE} is defined as:

$E_{AE} = BOH_R (y_P\ PE_R + y_{IG}\ PE_{IG} + yBE_R) + BOH_M (y_P\ PE_H + y_{IG}\ PE_{IG} + y\ BE_H) + E_{SO}$

Where:

BOH_R = as defined in 10.4.1.2 of this appendix
y_P = as defined in 10.4.1 of this appendix

PE_R = as defined in 9.1.2.2 of ANSI/ASHRAE Standard 103–1993, (incorporated by reference, *see* §430.3), measured at the reduced fuel input rate
y_{IG} = as defined in 10.4.1 of this appendix
PE_{IG} = as defined in 10.4.1 of this appendix
y = as defined in 10.4.1 of this appendix
BE_R = as defined in 9.1.2.2 of ANSI/ASHRAE Standard 103–1993, (incorporated by reference, *see* §430.3) measured at the reduced fuel input rate
BOH_M = as defined in 10.4.1.4 of this appendix
PE_H = as defined in 9.1.2.2 of ANSI/ASHRAE Standard 103–1993, (incorporated by reference, *see* §430.3) measured at the maximum fuel input rate
BE_H = as defined in 9.1.2.2 of ANSI/ASHRAE Standard 103–1993, (incorporated by reference, *see* §430.3) measured at the maximum fuel input rate
E_{SO} = as defined in 10.11 of this appendix.

10.5 *Average annual electric energy consumption for electric furnaces or boilers.*

$E_E = 100(2{,}080)(0.77)DHR/(3.412\ AFUE) + E_{SO}$

Where:

100 = to express a percent as a decimal
2,080 = as specified in 10.4.1 of this appendix
0.77 = as specified in 10.4.1 of this appendix
DHR = as defined in 10.4.1 of this appendix
3.412 = conversion to express energy in terms of watt-hours instead of Btu
AFUE = as defined in 11.1 of ANSI/ASHRAE Standard 103–1993 (incorporated by reference, *see* §430.3), in percent, and calculated on the basis of: ICS installation, for non-weatherized warm air furnaces; indoor installation, for non-weatherized boilers; or outdoor installation, for furnaces and boilers that are weatherized.
E_{SO} = as defined in 10.11 of this appendix.

10.6 *Energy factor.*

10.6.1 *Energy factor for gas or oil furnaces and boilers.* Calculate the energy factor, EF, for gas or oil furnaces and boilers defined as, in percent:

$$EF = \frac{(E_F - 4600\ Q_P)Effy_{HS}}{E_F + 3412\ E_{AE}}$$

Where:

E_F = average annual fuel consumption as defined in 10.4.2 of this appendix.
E_{AE} = as defined in 10.4.3 of this appendix.
$Effy_{HS}$ = Annual Fuel Utilization Efficiency as defined in 11.2.11, 11.3.11, 11.4.11 or 11.5.11 of ANSI/ASHRAE Standard 103–1993, in percent, and calculated on the basis of:
ICS installation, for non-weatherized warm air furnaces;
indoor installation, for non-weatherized boilers; or
outdoor installation, for furnaces and boilers that are weatherized.
3,412 = conversion factor from kilowatt to Btu/h

10.6.2 *Energy factor for electric furnaces and boilers.* The energy factor, EF, for electric furnaces and boilers is defined as:

EF = AFUE

Where:

AFUE = Annual Fuel Utilization Efficiency as defined in section 10.5 of this appendix, in percent

10.7 *Average annual energy consumption for furnaces and boilers located in a different geographic region of the United States and in buildings with different design heating requirements.*

10.7.1 *Average annual fuel energy consumption for gas or oil-fueled furnaces and boilers located in a different geographic region of the United States and in buildings with different design heating requirements.* For gas or oil-fueled furnaces and boilers, the average annual fuel energy consumption for a specific geographic region and a specific typical design heating requirement (E_{FR}) is expressed in Btu per year and defined as:

$E_{FR} = (E_F - 8{,}760\ Q_P)(HLH/2{,}080) + 8{,}760\ Q_P$

Where:

E_F = as defined in 10.4.2 of this appendix
8,760 = as specified in 10.4.1.1 of this appendix
Q_P = as defined in 11.2.11 of ANSI/ASHRAE Standard 103–1993
HLH = heating load hours for a specific geographic region determined from the heating load hour map in Figure 1 of this appendix
2,080 = as defined in 10.4.1 of this appendix

10.7.2 Average annual auxiliary electrical energy consumption for gas or oil-fueled furnaces and boilers located in a different geographic region of the United States and in buildings with different design heating requirements. For gas or oil-fueled furnaces and boilers, the average annual auxiliary electrical energy consumption for a specific geographic region and a specific typical design heating requirement (E_{AER}) is expressed in kilowatt-hours and defined as:

$E_{AER} = (E_{AE} - E_{SO})\ (HLH/2080) + E_{SOR}$

Where:

E_{AE} = as defined in 10.4.3 of this appendix
E_{SO} = as defined in 10.11 of this appendix
HLH = as defined in 10.7.1 of this appendix

2,080 = as specified in 10.4.1 of this appendix
E_{SOR} = as specified in 10.7.3 of this appendix.

10.7.3 Average annual electric energy consumption for electric furnaces and boilers located in a different geographic region of the United States and in buildings with different design heating requirements. For electric furnaces and boilers, the average annual electric energy consumption for a specific geographic region and a specific typical design heating requirement (E_{ER}) is expressed in kilowatt-hours and defined as:

$$E_{ER} = 100(0.77)\ DHR\ HLH/(3.412\ AFUE) + E_{SOR}$$

Where:

100 = as specified in 10.5 of this appendix
0.77 = as specified in 10.4.1 of this appendix
DHR = as defined in 10.4.1 of this appendix
HLH = as defined in 10.7.1 of this appendix
3.412 = as specified in 10.5 of this appendix
AFUE = as defined in 10.5 of this appendix
E_{SOR} = E_{SO} as defined in 10.11 of this appendix, except that in the equation for E_{SO}, the term BOH is multiplied by the expression (HLH/2080) to get the appropriate regional accounting of standby mode and off mode loss.

10.8 *Annual energy consumption for mobile home furnaces.*

10.8.1 *National average number of burner operating hours for mobile home furnaces (BOH_{SS}).* BOH_{SS} is the same as in 10.4.1 of this appendix, except that the value of $Effy_{HS}$ in the calculation of the burner operating hours, BOH_{SS}, is calculated on the basis of a direct vent unit with system number 9 or 10.

10.8.2 *Average annual fuel energy for mobile home furnaces (E_F).* E_F is same as in 10.4.2 of this appendix except that the burner operating hours, BOH_{SS}, is calculated as specified in 10.8.1 of this appendix.

10.8.3 *Average annual auxiliary electrical energy consumption for mobile home furnaces (E_{AE}).* E_{AE} is the same as in 10.4.3 of this appendix, except that the burner operating hours, BOH_{SS}, is calculated as specified in 10.8.1 of this appendix.

10.9 *Calculation of sales weighted average annual energy consumption for mobile home furnaces.* In order to reflect the distribution of mobile homes to geographical regions with average HLH_{MHF} value different from 2,080, adjust the annual fossil fuel and auxiliary electrical energy consumption values for mobile home furnaces using the following adjustment calculations.

10.9.1 For mobile home furnaces, the sales weighted average annual fossil fuel energy consumption is expressed in Btu per year and defined as:

$$E_{F,MHF} = (E_F - 8{,}760\ Q_P)HLH_{MHF}/2{,}080 + 8{,}760\ Q_P$$

Where:

E_F = as defined in 10.8.2 of this appendix
8,760 = as specified in 10.4.1.1 of this appendix
Q_P = as defined in 11.2.11 of ANSI/ASHRAE Standard 103–1993
HLH_{MHF} = 1880, sales weighted average heating load hours for mobile home furnaces
2,080 = as specified in 10.4.1 of this appendix

10.9.2 For mobile home furnaces, the sales weighted average annual auxiliary electrical energy consumption is expressed in kilowatt-hours and defined as:

$$E_{AE,MHF} = E_{AE}\ HLH_{MHF}/2{,}080$$

Where:

E_{AE} = as defined in 10.8.3 of this appendix
HLH_{MHF} = as defined in 10.9.1 of this appendix
2,080 = as specified in 10.4.1 of this appendix

10.10 *Direct determination of off-cycle losses for furnaces and boilers equipped with thermal stack dampers.* [Reserved]

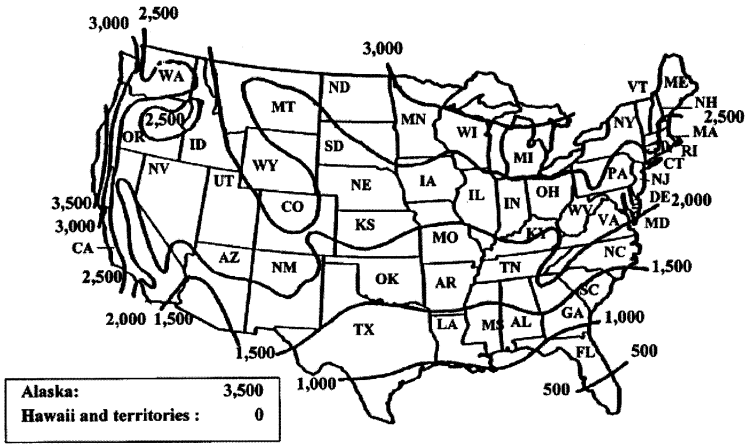

This map is reasonably accurate for most parts of the United States but is necessarily generalized, and consequently not too accurate in mountainous regions, particularly in the rockies.

FIGURE 1- HEATING LOAD HOURS (HLH) FOR THE UNITED STATES

10.11 *Average annual electrical standby mode and off mode energy consumption.* Calculate the annual electrical standby mode and off mode energy consumption (E_{SO}) in kilowatt-hours, defined as:

$E_{SO} = ((P_{W,SB} * (4160 - BOH)) + (P_{W,OFF} * 4600)) * K$

Where:

$P_{W,SB}$ = furnace or boiler standby mode power, in watts, as measured in section 8.6 of this appendix

4,160 = average heating season hours per year

$P_{W,OFF}$ = furnace or boiler off mode power, in watts, as measured in section 8.6 of this appendix

4,600 = average non-heating season hours per year

K = 0.001 kWh/Wh, conversion factor for watt-hours to kilowatt-hours

BOH = total burner operating hours as calculated in section 10.4 for gas or oil-fueled furnaces or boilers. Where for gas or oil-fueled furnaces and boilers equipped with single-stage controls, BOH = BOH_{SS} ; for gas or oil-fueled furnaces and boilers equipped with two-stage controls, BOH = (BOH_R + BOH_H); and for gas or oil-fueled furnaces and boilers equipped with step-modulating controls, BOH = (BOH_R + BOH_M). For electric furnaces and boilers, BOH = 100(2080)(0.77)DHR/(E_{in} 3.412)(AFUE))

Where:

100 = to express a percent as a decimal

2,080 = as specified in 10.4.1 of this appendix

0.77 = as specified in 10.4.1 of this appendix

DHR = as defined in 10.4.1 of this appendix

3.412 = conversion to express energy in terms of KBtu instead of kilowatt-hours

AFUE = as defined in 11.1 of ANSI/ASHRAE Standard 103–1993 (incorporated by reference, *see* § 430.3) in percent

E_{in} = Steady-state electric rated power, in kilowatts, from section 9.3 of ANSI/ASHRAE Standard 103–1993 (incorporated by reference, *see* § 430.3).

[62 FR 26157, May 12, 1997, as amended at 62 FR 53510, Oct. 14, 1997; 75 FR 64631, Oct. 20, 2010; 76 FR 37546, June 27, 2011; 77 FR 76839, Dec. 31, 2012; 78 FR 41272, July 10, 2013; 78 FR 53625, Aug. 30, 2013]

APPENDIX O TO SUBPART B OF PART 430—UNIFORM TEST METHOD FOR MEASURING THE ENERGY CONSUMPTION OF VENTED HOME HEATING EQUIPMENT

NOTE: The procedures and calculations that refer to standby mode and off mode energy consumption, (*i.e.*, sections 3.7 and 4.7 of this appendix) need not be performed to determine compliance with energy conservation standards for vented heaters at this time. However, on or after June 17, 2013, any representation related to standby mode and off mode energy consumption of these products must be based upon results generated under this test procedure, consistent with the requirements of 42 U.S.C. 6293(c)(2). For

vented home heating equipment, the statute requires that after July 1, 2010, any adopted energy conservation standard shall incorporate standby mode and off mode energy consumption, and upon the compliance date for such standards, compliance with the applicable provisions of this test procedure will also be required.

1.0 Definitions

1.1 ''Active mode'' means the condition during the heating season in which the vented heater is connected to the power source, and either the burner or any electrical auxiliary is activated.

1.2 ''Air shutter'' means an adjustable device for varying the size of the primary air inlet(s) to the combustion chamber power burner.

1.3 ''Air tube'' means a tube which carries combustion air from the burner fan to the burner nozzle for combustion.

1.4 ''Barometic draft regulator or barometric damper'' means a mechanical device designed to maintain a constant draft in a vented heater.

1.5 ''Draft hood'' means an external device which performs the same function as an integral draft diverter, as defined in section 1.17 of this appendix.

1.6 ''Electro-mechanical stack damper'' means a type of stack damper which is operated by electrical and/or mechanical means.

1.7 ''Excess air'' means air which passes through the combustion chamber and the vented heater flues in excess of that which is theoretically required for complete combustion.

1.8 ''Flue'' means a conduit between the flue outlet of a vented heater and the integral draft diverter, draft hood, barometric damper or vent terminal through which the flue gases pass prior to the point of draft relief.

1.9 ''Flue damper'' means a device installed between the furnace and the integral draft diverter, draft hood, barometric draft regulator, or vent terminal which is not equipped with a draft control device, designed to open the venting system when the appliance is in operation and to close the venting system when the appliance is in a standby condition.

1.10 ''Flue gases'' means reaction products resulting from the combustion of a fuel with the oxygen of the air, including the inerts and any excess air.

1.11 ''Flue losses'' means the sum of sensible and latent heat losses above room temperature of the flue gases leaving a vented heater.

1.12 ''Flue outlet'' means the opening provided in a vented heater for the exhaust of the flue gases from the combustion chamber.

1.13 ''Heat input'' (Q_{in}) means the rate of energy supplied in a fuel to a vented heater operating under steady-state conditions, expressed in Btu's per hour. It includes any input energy to the pilot light and is obtained by multiplying the measured rate of fuel consumption by the measured higher heating value of the fuel.

1.14 ''Heating capacity'' (Q_{out}) means the rate of useful heat output from a vented heater, operating under steady-state conditions, expressed in Btu's per hour. For room and wall heaters, it is obtained by multiplying the ''heat input'' (Q_{in}) by the steady-state efficency (η_{ss}) divided by 100. For floor furnaces, it is obtained by multiplying (A) the ''heat input'' (Q_{in}) by (B) the steady-state efficiency divided by 100, minus the quantity (2.8) (L_j) divided by 100, where L_j is the jacket loss as determined in section 3.2 of this appendix.

1.15 ''Higher heating value'' (HHV) means the heat produced per unit of fuel when complete combustion takes place at constant pressure and the products of combustion are cooled to the initial temperature of the fuel and air and when the water vapor formed during combustion is condensed. The higher heating value is usually expressed in Btu's per pound, Btu's per cubic foot for gaseous fuel, or Btu's per gallon for liquid fuel.

1.16 ''IEC 62301 (Second Edition)'' means the test standard published by the International Electrotechnical Commission, titled ''Household electrical appliances—Measurement of standby power,'' Publication 62301 Edition 2.0 2011–01 (incorporated by reference; see § 430.3).

1.17 ''Induced draft'' means a method of drawing air into the combustion chamber by mechanical means.

1.18 ''Infiltration parameter'' means that portion of unconditioned outside air drawn into the heated space as a consequence of loss of conditioned air through the exhaust system of a vented heater.

1.19 ''Integral draft diverter'' means a device which is an integral part of a vented heater, designed to: (1) Provide for the exhaust of the products of combustion in the event of no draft, back draft, or stoppage beyond the draft diverter, (2) prevent a back draft from entering the vented heater, and (3) neutralize the stack action of the chimney or gas vent upon the operation of the vented heater.

1.20 ''Manually controlled vented heaters'' means either gas or oil fueled vented heaters equipped without thermostats.

1.21 ''Modulating control'' means either a step-modulating or two-stage control.

1.22 ''Off mode'' means the condition during the non-heating season in which the vented heater is connected to the power source, and neither the burner nor any electrical auxiliary is activated.

1.23 ''Power burner'' means a vented heater burner which supplies air for combustion at a pressure exceeding atmospheric pressure,

or a burner which depends on the draft induced by a fan incorporated in the furnace for proper operation.

1.24 ''Reduced heat input rate'' means the factory adjusted lowest reduced heat input rate for vented home heating equipment equipped with either two stage thermostats or step-modulating thermostats.

1.25 ''Seasonal off switch'' means the control device, such as a lever or toggle, on the vented heater that affects a difference in off mode energy consumption as compared to standby mode consumption.

1.26 ''Single stage thermostat'' means a thermostat that cycles a burner at the maximum heat input rate and off.

1.27 ''Stack'' means the portion of the exhaust system downstream of the integral draft diverter, draft hood or barometric draft regulator.

1.28 ''Stack damper'' means a device installed downstream of the integral draft diverter, draft hood, or barometric draft regulator, designed to open the venting system when the appliance is in operation and to close off the venting system when the appliance is in the standby condition.

1.29 ''Stack gases'' means the flue gases combined with dilution air that enters at the integral draft diverter, draft hood or barometric draft regulator.

1.30 ''Standby mode'' means the condition during the heating season in which the vented heater is connected to the power source, and neither the burner nor any electrical auxiliary is activated.

1.31 ''Steady-state conditions for vented home heating equipment'' means equilibrium conditions as indicated by temperature variations of not more than 5 °F (2.8C) in the flue gas temperature for units equipped with draft hoods, barometric draft regulators or direct vent systems, in three successive readings taken 15 minutes apart or not more than 3 °F (1.7C) in the stack gas temperature for units equipped with integral draft diverters in three successive readings taken 15 minutes apart.

1.32 ''Step-modulating control'' means a control that either cycles off and on at the low input if the heating load is light, or gradually, increases the heat input to meet any higher heating load that cannot be met with the low firing rate.

1.33 ''Thermal stack damper'' means a type of stack damper which is dependent for operation exclusively upon the direct conversion of thermal energy of the stack gases into movement of the damper plate.

1.34 ''Two stage control'' means a control that either cycles a burner at the reduced heat input rate and off or cycles a burner at the maximum heat input rate and off.

1.35 ''Vaporizing-type oil burner'' means a device with an oil vaporizing bowl or other receptacle designed to operate by vaporizing liquid fuel oil by the heat of combustion and mixing the vaporized fuel with air.

1.36 ''Vent/air intake terminal'' means a device which is located on the outside of a building and is connected to a vented heater by a system of conduits. It is composed of an air intake terminal through which the air for combustion is taken from the outside atmosphere and a vent terminal from which flue gases are discharged.

1.37 ''Vent limiter'' means a device which limits the flow of air from the atmospheric diaphragm chamber of a gas pressure regulator to the atmosphere. A vent limiter may be a limiting orifice or other limiting device.

1.33 ''Vent pipe'' means the passages and conduits in a direct vent system through which gases pass from the combustion chamber to the outdoor air.

2.0 Testing conditions.

2.1 *Installation of test unit.*

2.1.1 *Vented wall furnaces (including direct vent systems).* Install gas fueled vented wall furnaces for test as specified in sections 2.1.3 and 2.1.4 of ANSI Z21.49–1975. Install gas fueled wall furnaces with direct vent systems for test as described in sections 2.1.3 and 2.1.4 of ANSI Z21.44–1973. Install oil fueled vented wall furnaces as specified in UL–730–1974, section 33. Install oil fueled vented wall furnaces with direct vent systems as specified in UL–730–1974, section 34.

2.1.2 *Vented floor furnaces.* Install vented floor furnaces for test as specified in sections 35.1 through 35.5 of UL–729–1976.

2.1.3 *Vented room heaters.* Install in accordance with manufacturer's instructions.

2.2 *Flue and stack requirements.*

2.2.1 *Gas fueled vented home heating equipment employing integral draft diverters and draft hoods (excluding direct vent systems).* Attach to, and vertically above the outlet of gas fueled vented home heating equipment employing draft diverters or draft hoods with vertically discharging outlets, a five (5) foot long test stack having a cross sectional area the same size as the draft diverter outlet.

Attach to the outlet of vented heaters having a horizontally discharging draft diverter or draft hood outlet a 90 degree elbow, and a five (5) foot long vertical test stack. A horizontal section of pipe may be used on the floor furnace between the diverter and the elbow if necessary to clear any framing used in the installation. Use the minimum length of pipe possible for this section. Use stack, elbow, and horizontal section with same cross sectional area as the diverter outlet.

2.2.2 *Oil fueled vented home heating equipment (excluding direct vent systems).* Use flue connections for oil fueled vented floor furnaces as specified in section 35 of UL 729–1976, sections 34.10 through 34.18 of UL 730–1974 for oil fueled vented wall furnaces and

sections 36.2 and 36.3 of UL 896–1973 for oil fueled vented room heaters.

2.2.3 *Direct vent systems.* Have the exhaust/air intake system supplied by the manufacturer in place during all tests. Test units intended for installation with a variety of vent pipe lengths with the minimum length recommended by the manufacturer. Do not connect a heater employing a direct vent system to a chimney or induced draft source. Vent the gas solely on the provision for venting incorporated in the heater and the vent/air intake system supplied with it.

2.3 *Fuel supply.*

2.3.1 *Natural gas.* For a vented heater utilizing natural gas, maintain the gas supply to the unit under test at a normal inlet test pressure immediately ahead of all controls at 7 to 10 inches water column. Maintain the regulator outlet pressure at normal test pressure approximately at that recommended by the manufacturer. Use natural gas having a specific gravity of approximately 0.65 and a higher heating value within ±5 percent of 1,025 Btu's per standard cubic foot. Determine the actual higher heating value in Btu's per standard cubic foot for the natural gas to be used in the test with an error no greater than one percent.

2.3.2 *Propane gas.* For a vented heater utilizing propane gas, maintain the gas supply to the unit under test at a normal inlet pressure of 11 to 13 inches water column and a specific gravity of approximately 1.53. Maintain the regulator outlet pressure, on units so equipped, approximately at that recommended by the manufacturer. Use propane having a specific gravity of approximately 1.53 and a higher heating value within ±5 percent of 2,500 Btu's per standard cubic foot. Determine the actual higher heating value in Btu's per standard cubic foot for the propane to be used in the test with an error no greater than one percent.

2.3.3 *Other test gas.* Use other test gases with characteristics as described in section 2.2, table VII, of ANSI Standard Z21.11.1–1974. Use gases with a measured higher heating value within ±5 percent of the values specified in the above ANSI standard. Determine the actual higher heating value of the gas used in the test with an error no greater than one percent.

2.3.4 *Oil supply.* For a vented heater utilizing fuel oil, use No. 1, fuel oil (kerosene) for vaporizing-type burners and either No. 1 or No. 2 fuel oil, as specified by the manufacturer, for mechanical atomizing type burners. Use No. 1 fuel oil with a viscosity meeting the specifications as specified in UL–730–1974, section 36.9. Use test fuel conforming to the specifications given in tables 2 and 3 of ANSI Standard Z91.1–1972
for No. 1 and No. 2 fuel oil. Measure the higher heating value of the test fuel with an error no greater than one percent.

2.3.5 *Electrical supply.* For auxiliary electric components of a vented heater, maintain the electrical supply to the test unit within one percent of the nameplate voltage for the entire test cycle. If a voltage range is used for nameplate voltage, maintain the electrical supply within one percent of the mid-point of the nameplate voltage range.

2.4 *Burner adjustments.*

2.4.1 *Gas burner adjustments.* Adjust the burners of gas fueled vented heaters to their maximum Btu ratings at the test pressure specified in section 2.3 of this appendix. Correct the burner volumetric flow rate to 60 °F (15.6C) and 30 inches of mercury barometric pressure, set the fuel flow rate to obtain a heat rate of within ±2 percent of the hourly Btu rating specified by the manufacturer as measured after 15 minutes of operation starting with all parts of the vented heater at room temperature. Set the primary air shutters in accordance with the manufacturer's recommendations to give a good flame at this adjustment. Do not allow the deposit of carbon during any test specified herein.

If a vent limiting means is provided on a gas pressure regulator, have it in place during all tests.

For gas fueled heaters with modulating controls adjust the controls to operate the heater at the maximum fuel input rate. Set the thermostat control to the maximum setting. Start the heater by turning the safety control valve to the ''on'' position. In order to prevent modulation of the burner at maximum input, place the thermostat sensing element in a temperature control bath which is held at a temperature below the maximum set point temperature of the control.

For gas fueled heaters with modulating controls adjust the controls to operate the heater at the reduced fuel input rate. Set the thermostat control to the minimum setting. Start the heater by turning the safety control valve to the ''on'' position. If ambient test room temperature is above the lowest control set point temperature, initiate burner operation by placing the thermostat sensing element in a temperature control bath that is held at a temperature below the minimum set point temperature of the control.

2.4.2 *Oil burner adjustments.* Adjust the burners of oil fueled vented heaters to give the CO_2 reading recommended by the manufacturer and an hourly Btu input, during the steady-state performance test described below, which is within ±2 percent of the heater manufacturer's specified normal hourly Btu input rating. On units employing a power burner do not allow smoke in the flue to exceed a No. 1 smoke during the steady-state performance test as measured by the procedure in ANSI Standard Z11.182–1965 (R1971) (ASTM D 2156–65 (1970)). If, on units employing a power burner, the smoke in the flue exceeds a No. 1 smoke during the steady-state test, readjust the burner to give a

lower smoke reading, and, if necessary a lower CO_2 reading, and start all tests over. Maintain the average draft over the fire and in the flue during the steady-state performance test at that recommended by the manufacturer within ±0.005 inches of water gauge. Do not make additional adjustments to the burner during the required series of performance tests. The instruments and measuring apparatus for this test are described in section 6.3 of ANSI standard Z91.1–1972.

2.5 *Circulating air adjustments.*

2.5.1 *Forced air vented wall furnaces (including direct vent systems).* During tests maintain the air flow through the heater as specified by the manufacturer and operate the vented heater with the outlet air temperature between 80 °F and 130 °F above room temperature. If adjustable air discharge registers are provided, adjust them so as to provide the maximum possible air restriction. Measure air discharge temperature as specified in section 2.14 of ANSI Z21.49–1975.

2.5.2 *Fan type vented room heaters and floor furnaces.* During tests on fan type furnaces and heaters, adjust the air flow through the heater as specified by the manufacturer. If adjustable air discharge registers are provided, adjust them to provide the maximum possible air restriction.

2.6 *Location of temperature measuring instrumentation.*

2.6.1 *Gas fueled vented home heating equipment (including direct vent systems).* For units employing an integral draft diverter, install nine thermocouples, wired in parallel, in a horizontal plane in the five foot test stack located one foot from the test stack inlet. Equalize the length of all thermocouple leads before paralleling. Locate one thermocouple in the center of the stack. Locate eight thermocouples along imaginary lines intersecting at right angles in this horizontal plane at points one third and two thirds of the distance between the center of the stack and the stack wall.

For units which employ a direct vent system, locate at least one thermocouple at the center of each flue way exiting the heat exchanger. Provide radiation shields if the thermocouples are exposed to burner radiation.

For units which employ a draft hood or units which employ a direct vent system which does not significantly preheat the incoming combustion air, install nine thermocouples, wired in parallel, in a horizontal plane located within 12 inches (304.8 mm) of the heater outlet and upstream of the draft hood on units so equipped. Locate one thermocouple in the center of the pipe and eight thermocouples along imaginary lines intersecting at right angles in this horizontal plane at points one third and two thirds of the distance between the center of the pipe and the pipe wall.

For units which employ direct vent systems that significantly preheat the incoming combustion air, install nine thermocouples, wired in parallel, in a plane parallel to and located within 6 inches (152.4 mm) of the vent/air intake terminal. Equalize the length of all thermocouple leads before paralleling. Locate one thermocouple in the center of the vent pipe and eight thermocouples along imaginary lines intersecting at right angles in this plane at points one third and two thirds of the distance between the center of the flue pipe and the pipe wall.

Use bead-type thermocouples having wire size not greater than No. 24 American Wire Gauge (AWG). If there is a possibility that the thermocouples could receive direct radiation from the fire, install radiation shields on the fire side of the thermocouples only and position the shields so that they do not touch the thermocouple junctions.

Install thermocouples for measuring conditioned warm air temperature as described in ANSI Z21.49–1975, section 2.14. Establish the temperature of the inlet air by means of single No. 24 AWG bead-type thermocouple, suitably shielded from direct radiation and located in the center of the plane of each inlet air opening.

2.6.2 *Oil fueled vented home heating equipment (including direct vent systems).* Install nine thermocouples, wired in parallel and having equal length leads, in a plane perpendicular to the axis of the flue pipe. Locate this plane at the position shown in Figure 34.4 of UL 730–1974, or Figures 35.1 and 35.2 of UL 729–1976 for a single thermocouple, except that on direct vent systems which significantly preheat the incoming combustion air, it shall be located within 6 inches (152.5 mm) of the outlet of the vent/air intake terminal. Locate one thermocouple in the center of the flue pipe and eight thermocouples along imaginary lines intersecting at right angles in this plane at points one third and two thirds of the distance between the center of the pipe and pipe wall.

Use bead-type thermocouples having a wire size not greater than No. 24 AWG. If there is a possibility that the thermocouples could receive direct radiation from the fire, install radiation shields on the fire side of the thermocouples only and position the shields so that they do not touch the thermocouple junctions.

Install thermocouples for measuring the conditioned warm air temperature as described in sections 35.12 through 35.17 of UL 730–1974. Establish the temperature of the inlet air by means of a single No. 24 AWG bead-type thermocouple, suitably shielded from direct radiation and located in the center of the plane of each inlet air opening.

2.7 *Combustion measurement instrumentation.* Analyze the samples of stack and flue gases for vented heaters to determine the concentration by volume of carbon dioxide

present in the dry gas with instrumentation which will result in a reading having an accuracy of ±0.1 percentage points.

2.8 *Energy flow instrumentation.* Install one or more instruments, which measure the rate of gas flow or fuel oil supplied to the vented heater, and if appropriate, the electrical energy with an error no greater than one percent.

2.9 *Room ambient temperature.* During the time period required to perform all the testing and measurement procedures specified in section 3.0 of this appendix, maintain the room temperature within ±5 °F (±2.8C) of the value T_{RA} measured during the steady-state performance test. At no time during these tests shall the room temperature exceed 100 °F (37.8C) or fall below 65 °F (18.3C).

Temperature (T_{RA}) shall be the arithmetic average temperature of the test area, determined by measurement with four No. 24 AWG bead-type thermocouples with junctions shielded against radiation, located approximately at 90-degree positions on a circle circumscribing the heater or heater enclosure under test, in a horizontal plane approximately at the vertical midpoint of the appliance or test enclosure, and with the junctions approximately 24 inches from sides of the heater or test enclosure and located so as not to be affected by other than room air. Locate a thermocouple at each elevation of draft relief inlet opening and combustion air inlet opening at a distance of approximately 24 inches from the inlet openings. The temperature of the air for combustion and the air for draft relief shall not differ more than ±5 °F from room temperature as measured above.

2.10 *Equipment used to measure mass flow rate in flue and stack.* The tracer gas chosen for this task should have a density which is less than or approximately equal to the density of air. Use a gas unreactive with the environment to be encountered. Using instrumentation of either the batch or continuous type, measure the concentration of tracer gas with an error no greater than 2 percent of the value of the concentration measured.

3.0 Testing and measurements.

3.1 *Steady-state testing.*

3.1.1 *Gas fueled vented home heating equipment (including direct vent systems).* Set up the vented heater as specified in sections 2.1, 2.2, and 2.3 of this appendix. The draft diverter shall be in the normal open condition and the stack shall not be insulated. (Insulation of the stack is no longer required for the vented heater test.) Begin the steady-state performance test by operating the burner and the circulating air blower, on units so equipped, with the adjustments specified by sections 2.4.1 and 2.5 of this appendix, until steady-state conditions are attained as indicated by a temperature variation of not more than 3 °F (1.7 C) in the stack gas temperature for vented heaters equipped with draft diverters or 5 °F (2.8 C) in the flue gas temperature for vented heaters equipped with either draft hoods or direct vent systems; in three successive readings taken 15 minutes apart.

On units employing draft diverters, measure the room temperature (T_{RA}) as described in section 2.9 of this appendix and measure the steady-state stack gas temperature ($T_{S,SS}$) using the nine thermocouples located in the 5 foot test stack as specified in section 2.6.1 of this appendix. Secure a sample of the stack gases in the plane where $T_{S,SS}$ is measured or within 3.5 feet downstream of this plane. Determine the concentration by volume of carbon dioxide (X_{CO2S}) present in the dry stack gas. If the location of the gas sampling differs from the temperature measurement plane, there shall be no air leaks through the stack between these two locations.

On units employing draft hoods or direct vent systems, measure the room temperature (T_{RA}) as described in section 2.9 of this appendix and measure the steady-state flue gas temperature ($T_{F,SS}$), using the nine thermocouples located in the flue pipe as described in section 2.6.1 of this appendix. Secure a sample of the flue gas in the plane of temperature measurement and determine the concentration by volume of CO_2 (X_{CO2F}) present in dry flue gas. In addition, for units employing draft hoods, secure a sample of the stack gas in a horizontal plane in the five foot test stack located one foot from the test stack inlet; and determine the concentration by volume of CO_2 (X_{CO2S}) present in dry stack gas.

Determine the steady-state heat input rate (Q_{in}) including pilot gas by multiplying the measured higher heating value of the test gas by the steady-state gas input rate corrected to standard conditions of 60 °F and 30 inches of mercury. Use measured values of gas temperature and pressure at the meter and the barometric pressure to correct the metered gas flow rate to standard conditions.

After the above test measurements have been completed on units employing draft diverters, secure a sample of the flue gases at the exit of the heat exchanger(s) and determine the concentration of CO_2 (X_{CO2F}) present. In obtaining this sample of flue gas, move the sampling probe around or use a sample probe with multiple sampling ports in order to assure that an average value is obtained for the CO_2 concentration. For units with multiple heat exchanger outlets, measure the CO_2 concentration in a sample from each outlet to obtain the average CO_2 concentration for the unit. A manifold (parallel connected sampling tubes) may be used to obtain this sample.

For heaters with single stage thermostat control (wall mounted electric thermostats),

determine the steady-state efficiency at the maximum fuel input rate as specified in section 2.4 of this appendix.

For gas fueled vented heaters equipped with either two stage thermostats or step-modulating thermostats, determine the steady-state efficiency at the maximum fuel input rate, as specified in section 2.4.1 of this appendix, and at the reduced fuel input rate, as specified in section 2.4.1 of this appendix.

For manually controlled gas fueled vented heaters, with various input rates determine the steady-state efficiency at a fuel input rate that is within ±5 percent of 50 percent of the maximum fuel input rate. If the heater is designed to use a control that precludes operation at other than maximum output (single firing rate) determine the steady state efficiency at the maximum input rate only.

3.1.2 *Oil fueled vented home heating equipment (including direct vent systems).* Set up and adjust the vented heater as specified in sections 2.1, 2.2, and 2.3.4 of this appendix. Begin the steady-state performance test by operating the burner and the circulating air blower, on units so equipped, with the adjustments specified by sections 2.4.2 and 2.5 of this appendix until steady-state conditions are attained as indicated by a temperature variation of not more than 5 °F (2.8 C) in the flue gas temperature in three successive readings taken 15 minutes apart.

Do not allow smoke in the flue, for units equipped with power burners, to exceed a No. 1 smoke during the steady-state performance test as measured by the procedure described in ANSI standard Z11.182–1965 (R1971) (ASTM D 2156–65 (1970)). Maintain the average draft over the fire and in the breeching during the steady-state performance test at that recommended by the manufacturer ±0.005 inches of water gauge.

Measure the room temperature (T_{RA}) as described in section 2.9 of this appendix and measure the steady-state flue gas temperature ($T_{F,SS}$) using nine thermocouples located in the flue pipe as described in section 2.6.2 of this appendix. Secure a sample of the flue gas in the plane of temperature measurement and determine the concentration by volume of CO_2(X_{CO2F}) present in dry flue gas. Measure and record the steady-state heat input rate (Q_{in}).

For manually controlled oil fueled vented heaters, determine the steady-state efficiency at a fuel input rate that is within ±5 percent of 50 percent of the maximum fuel input rate.

3.1.3 *Auxiliary Electric Power Measurement.* Allow the auxiliary electrical system of a gas or oil vented heater to operate for at least five minutes before recording the maximum auxiliary electric power measurement from the wattmeter. Record the maximum electric power (P_E) expressed in kilowatts. For vented heaters with modulating controls, the recorded (P_E) shall be maximum measured electric power multiplied by the following factor (R). For two stage controls, R=1.3. For step modulating controls, R=1.4 when the ratio of minimum-to-maximum fuel input is greater than or equal to 0.7, R=1.7 when the ratio of minimum-to-maximum fuel input is less than 0.7 and greater than or equal to 0.5, and R=2.2 when the ratio of minimum-to-maximum fuel input is less than 0.5.

3.2 *Jacket loss measurement.* Conduct a jacket loss test for vented floor furnaces. Measure the jacket loss (L_j) in accordance with the ANSI standard Z21.48–1976 section 2.12.

3.3 *Measurement of the off-cycle losses for vented heaters equipped with thermal stack dampers.* Install the thermal stack damper according to the manufacturer's instructions. Unless specified otherwise, the thermal stack damper should be at the draft diverter exit collar. Attach a five foot length of bare stack to the outlet of the damper. Install thermocouples as specified in section 2.6.1 of this appendix.

For vented heaters equipped with single stage thermostats, measure the off-cycle losses at the maximum fuel input rate. For vented heaters equipped with two stage thermostats, measure the off-cycle losses at the maximum fuel input rate and at the reduced fuel input rate. For vented heaters equipped with step-modulating thermostats, measure the off-cycle losses at the reduced fuel input rate.

Let the vented heater heat up to a steady-state condition. Feed a tracer gas at a constant metered rate into the stack directly above and within one foot above the stack damper. Record tracer gas flow rate and temperature. Measure the tracer gas concentration in the stack at several locations in a horizontal plane through a cross section of the stack at a point sufficiently above the stack damper to ensure that the tracer gas is well mixed in the stack.

Continuously measure the tracer gas concentration and temperature during a 10 minute cool down period. Shut the burner off and immediately begin measuring tracer gas concentration in the stack, stack temperature, room temperature, and barometric pressure. Record these values as the midpoint of each one-minute interval between burner shut down and ten minutes after burner shut down. Meter response time and sampling delay time shall be considered in timing these measurements.

3.4 *Measurement of the effectiveness of electro-mechanical stack dampers.* For vented heaters equipped with electro-mechanical stack dampers, measure the cross sectional area of the stack (A_s), the net area of the damper plate (A_o), and the angle that the damper plate makes when closed with a plane perpendicular to the axis of the stack (Ω). The net area of the damper plate means

the area of the damper plate minus the area of any holes through the damper plate.

3.5 *Pilot light measurement.*

3.5.1 Measure the energy input rate to the pilot light (Q_P) with an error no greater than 3 percent for vented heaters so equipped.

3.5.2 For manually controlled heaters where the pilot light is designed to be turned off by the user when the heater is not in use, that is, turning the control to the OFF position will shut off the gas supply to the burner(s) and to the pilot light, the measurement of Q_P is not needed. This provision applies only if an instruction to turn off the unit is provided on the heater near the gas control valve (e.g. by label) by the manufacturer.

3.6 *Optional procedure for determining* D_p, D_F, and D_s *for systems for all types of vented heaters.* For all types of vented heaters, D_p, D_F, and D_S can be measured by the following optional cool down test.

Conduct a cool down test by letting the unit heat up until steady-state conditions are reached, as indicated by temperature variation of not more than 5 °F (2.8 °C) in the flue gas temperature in three successive readings taken 15 minutes apart, and then shutting the unit off with the stack or flue damper controls by-passed or adjusted so that the stack or flue damper remains open during the resulting cool down period. If a draft was maintained on oil fueled units in the flue pipe during the steady-state performance test described in section 3.1 of this appendix, maintain the same draft (within a range of −.001 to +.005 inches of water gauge of the average steady-state draft) during this cool down period.

Measure the flue gas mass flow rate ($m_{F,OFF}$) during the cool down test described above at a specific off-period flue gas temperature and corrected to obtain its value at the steady-state flue gas temperature ($T_{F,SS}$), using the procedure described below.

Within one minute after the unit is shut off to start the cool down test for determining D_F, begin feeding a tracer gas into the combustion chamber at a constant flow rate of V_T, and at a point which will allow for the best possible mixing with the air flowing through the chamber. (On units equipped with an oil fired power burner, the best location for injecting this tracer gas appears to be through a hole drilled in the air tube.) Periodically measure the value of V_T with an instantaneously reading flow meter having an accuracy of ±3 percent of the quantity measured. Maintain V_T at less than 1 percent of the air flow rate through the furnace. If a combustible tracer gas is used, there should be a delay period between the time the burner gas is shut off and the time the tracer gas is first injected to prevent ignition of the tracer gas.

Between 5 and 6 minutes after the unit is shut off to start the cool down test, measure at the exit of the heat exchanger the average flue gas temperature, $T^*_{F,Off.}$ At the same instant the flue gas temperature is measured, also measure the percent volumetric concentration of tracer gas C_T in the flue gas in the same plane where $T^*_{F,Off}$ is determined. Obtain the concentration of tracer gas using an instrument which will result in an accuracy of ±2 percent in the value of C_T measured. If use of a continuous reading type instrument results in a delay time between drawing of a sample and its analysis, this delay should be taken into account so that the temperature measurement and the measurement of tracer gas concentration coincide. In addition, determine the temperature of the tracer gas entering the flow meter (T_T) and the barometric pressure (P_B).

The rate of the flue gas mass flow through the vented heater and the factors D_P, D_F, and D_S are calculated by the equations in sections 4.5.1 through 4.5.3 of this appendix.

3.7 *Measurement of electrical standby mode and off mode power.*

3.7.1 *Standby power measurements.* With all electrical auxiliaries of the vented heater not activated, measure the standby power ($P_{W,SB}$) in accordance with the procedures in IEC 62301 (Second Edition) (incorporated by reference, see §430.3), except that section 2.9, *Room ambient temperature,* and the voltage provision of section 2.3.5, *Electrical supply,* of this appendix shall apply in lieu of the IEC 62301 (Second Edition) corresponding sections 4.2, *Test room,* and 4.3, *Power supply.* Clarifying further, the IEC 62301 (Second Edition) sections 4.4, *Power measuring instruments,* and section 5, *Measurements,* shall apply in lieu of section 2.8, *Energy flow instrumentation,* of this appendix. Measure the wattage so that all possible standby mode wattage for the entire appliance is recorded, not just the standby mode wattage of a single auxiliary. The recorded standby power ($P_{W,SB}$) shall be rounded to the second decimal place, and for loads greater than or equal to 10W, at least three significant figures shall be reported.

3.7.2 *Off mode power measurement.* If the unit is equipped with a seasonal off switch or there is an expected difference between off mode power and standby mode power, measure off mode power ($P_{W,OFF}$) in accordance with the standby power procedures in IEC 62301 (Second Edition) (incorporated by reference, see §430.3), except that section 2.9, *Room ambient temperature,* and the voltage provision of section 2.3.5, *Electrical supply,* of this appendix shall apply in lieu of the IEC 62301 (Second Edition) corresponding sections 4.2, *Test room,* and 4.3, *Power supply.* Clarifying further, the IEC 62301 (Second Edition) sections 4.4, *Power measuring instruments,* and section 5, *Measurements,* shall apply in lieu of section 2.8, *Energy flow instrumentation,* of this appendix. Measure the wattage so that all possible off mode wattage

for the entire appliance is recorded, not just the off mode wattage of a single auxiliary. If there is no expected difference in off mode power and standby mode power, let $P_{W,OFF}$ = $P_{W,SB}$, in which case no separate measurement of off mode power is necessary. The recorded off mode power ($P_{W,OFF}$) shall be rounded to the second decimal place, and for loads greater than or equal to 10W, at least three significant figures shall be reported.

4.0 Calculations.

4.1 *Annual fuel utilization efficiency for gas or oil fueled vented home heating equipment equipped without manual controls and without thermal stack dampers.* The following procedure determines the annual fuel utilization efficiency for gas or oil fueled vented home heating equipment equipped without manual controls and without thermal stack dampers.

4.1.1 *System number.* Obtain the system number from Table 1 of this appendix.

4.1.2 *Off-cycle flue gas draft factor.* Based on the system number, determine the off-cycle flue gas draft factor (D_F) from Table 1 of this appendix.

4.1.3 *Off-cycle stack gas draft factor.* Based on the system number, determine the off-cycle stack gas draft factor (D_s) from Table 1 of this appendix.

4.1.4 *Pilot fraction.* Calculate the pilot fraction (P_F) expressed as a decimal and defined as:

$$P_F = Q_P/Q_{in}$$

where:

Q_P = as defined in 3.5 of this appendix
Q_{in} = as defined in 3.1 of this appendix at the maximum fuel input rate

4.1.5 *Jacket loss for floor furnaces.* Determine the jacket loss (L_j) expressed as a percent and measured in accordance with section 3.2 of this appendix. For other vented heaters L_j = 0.0.

4.1.6 *Latent heat loss.* Based on the fuel, obtain the latent heat loss ($L_{L,A}$) from Table 2 of this appendix.

4.1.7 *Ratio of combustion air mass flow rate to stoichiometric air mass flow rate.* Determine the ratio of combustion air mass flow rate to stoichiometric air mass flow rate ($R_{T,F}$), and defined as:

$$R_{T,F} = A+B/X_{CO2F}$$

where:

A=as determined from Table 2 of this appendix
B=as determined from Table 2 of this appendix
X_{CO2F} = as defined in 3.1 of this appendix

4.1.8 *Ratio of combustion and relief air mass flow rate to stoichiometric air mass flow rate.* For vented heaters equipped with either an integral draft diverter or a drafthood, determine the ratio of combustion and relief air mass flow rate to stoichiometric air mass flow rate ($R_{T,S}$), and defined as:

$$R_{T,S} = A+[B/X_{CO2S}]$$

where:

A=as determined from Table 2 of this appendix
B=as determined from Table 2 of this appendix
X_{CO2S} = as defined in 3.1 of this appendix

4.1.9 *Sensible heat loss at steady-state operation.* For vented heaters equipped with either an integral draft diverter or a draft hood, determine the sensible heat loss at steady-state operation ($L_{S,SS,A}$) expressed as a percent and defined as:

where:

$L_{S,SS,A} = C(R_{T,S}+D)(T_{S,SS} - T_{RA})$
C=as determined from Table 2 of this appendix
$R_{T,S}$ = as defined in 4.1.8 of this appendix
D=as determined from Table 2 of this appendix
$T_{S,SS}$ = as defined in 3.1 of this appendix
T_{RA} = as defined in 2.9 of this appendix

For vented heaters equipped without an integral draft diverter, determine ($L_{S,SS,A}$) expressed as a percent and defined as:

$$L_{S,SS,A} = C(R_{T,F}+D)(T_{F,SS} - T_{RA})$$

where:

C=as determined from Table 2 of this appendix
$R_{T,F}$ = as defined in 4.1.7 of this appendix
D=as determined from Table 2 of this appendix
$T_{F,SS}$ = as defined in 3.1 of this appendix
T_{RA} = as defined in 2.9 of this appendix

4.1.10 *Steady-state efficiency.* For vented heaters equipped with single stage thermostats, calculate the steady-state efficiency (excluding jacket loss, η_{SS}, expressed in percent and defined as:

$$\eta_{SS} = 100 - L_{L,A} - L_{S,SS,A}$$

where:

$L_{L,A}$ = as defined in 4.1.6 of this appendix
$L_{S,SS,A}$ = as defined in 4.1.9 of this appendix

For vented heaters equipped with either two stage thermostats or with step-modulating thermostats, calculate the steady-state efficiency at the reduced fuel input rate, η_{SS}, L, expressed in percent and defined as:

$$\eta_{SS-L} = 100 - L_{L,A} - L_{S,SS,A}$$

where:

$L_{L,A}$ = as defined in 4.1.6 of this appendix
$L_{S,SS,A}$ = as defined in 4.1.9 of this appendix in which $L_{S,SS,A}$ is determined at the reduced fuel input rate

For vented heaters equipped with two stage thermostats, calculate the steady-

state efficiency at the maximum fuel input rate,

η_{SS-H}, expressed in percent and defined as:

$$\eta_{SS-H} = 100 - L_{L,A} - L_{S,SS,A}$$

where:

$L_{L,A}$ = as defined in 4.1.6 of this appendix

$L_{S,SS,A}$ = as defined in 4.1.9 of this appendix in which $L_{S,SS,A}$ is measured at the maximum fuel input rate

For vented heaters equipped with step-modulating thermostats, calculate the weighted-average steady-state efficiency in the modulating mode, η_{SS-MOD}, expressed in percent and defined as:

$$\eta_{SS-MOD} = \left[\eta_{SS-H} - \eta_{SS-L}\right]\left[\frac{T_C - T_{OA*}}{T_C - 15}\right] + \eta_{SS-L}$$

where:

η_{SS-H} = as defined in 4.1.10 of this appendix

η_{SS-L} = as defined in 4.1.10 of this appendix

T_{OA*} = average outdoor temperature for vented heaters with step-modulating thermostats operating in the modulating mode and is obtained from Table 3 or Figure 1 of this appendix

T_C = balance point temperature which represents a temperature used to apportion the annual heating load between the reduced input cycling mode and either the modulating mode or maximum input cycling mode and is obtained either from Table 3 of this appendix or calculated by the following equation:

$$T_C = 65 - [(65 - 15)R]$$

where:

65=average outdoor temperature at which a vented heater starts operating

15=national average outdoor design temperature for vented heaters

R=ratio of reduced to maximum heat output rates, as defined in 4.1.13 of this appendix

4.1.11 *Reduced heat output rate.* For vented heaters equipped with either two stage thermostats or step-modulating thermostats, calculate the reduced heat output rate ($Q_{red-out}$) defined as:

$$Q_{red-out} = \eta_{SS-L}\, Q_{red-in}$$

where:

η_{SS-L} = as defined in 4.1.10 of this appendix

Q_{red-in} = the reduced fuel input rate

4.1.12 *Maximum heat output rate.* For vented heaters equipped with either two stage thermostats or step-modulating thermostas, calculate the maximum heat output rate ($Q_{max-out}$) defined as:

$$Q_{max,out} = h_{SS,H}\, Q_{max,in}$$

where:

η_{SS-H} = as defined in 4.1.10 of this appendix

Q_{max-in} = the maximum fuel input rate

4.1.13 *Ratio of reduced to maximum heat output rates.* For vented heaters equipped with either two stage thermostats or step-modulating thermostats, calculate the ratio of reduced to maximum heat output rates (R) expressed as a decimal and defined as:

$$R = Q_{red-out}/Q_{max-out}$$

where:

$Q_{red-out}$ = as defined in 4.1.11 of this appendix

$Q_{max-out}$ = as defined in 4.1.12 of this appendix

4.1.14 *Fraction of heating load at reduced operating mode.* For vented heaters equipped with either two stage thermostats or step-modulating thermostats, determine the fraction of heating load at the reduced operating mode (X_1) expressed as a decimal and listed in Table 3 of this appendix or obtained from Figure 2 of this appendix.

4.1.15 *Fraction of heating load at maximum operating mode or noncycling mode.* For vented heaters equFipped with either two stage thermostats or step-modulating therostats, determine the fraction of heating load at the maximum operating mode or noncycling mode (X_2) expressed as a decimal and listed in Table 3 of this appendix or obtained from Figure 2 of this appendix.

4.1.16 *Weighted-average steady-state efficiency.* For vented heaters equipped with single stage thermostats, the weighted-average steady-state efficiency (η_{SS-WT}) is equal to η_{SS}, as defined in section 4.1.10 of this appendix. For vented heaters equipped with two stage thermostats, η_{SS-WT} is defined as:

$$\eta_{SS-WT} = X_1\eta_{SS-L} + X_2\eta_{SS-H}$$

where:

X_1 = as defined in 4.1.14 of this appendix

η_{SS-L} = as defined in 4.1.10 of this appendix

X_2 = as defined in 4.1.15 of this appendix

η_{SS-H} = as defined in 4.1.10 of this appendix

For vented heaters equipped with step-modulating thermostats, η_{SS-WT} is defined as:

$$\eta_{SS-WT} = X_1\eta_{SS-L} + X_2\eta_{SS-MOD}$$

where:

X_1 = as defined in 4.1.14 of this appendix
η_{SS-L} = as defined in 4.1.10 of this appendix
X_2 = as defined in 4.1.15 of this appendix
η_{SS-MOD} = as defined in 4.1.10 of this appendix

4.1.17 *Annual fuel utilization efficiency*. Calculate the annual fuel utilization efficiency (AFUE) expressed as percent and defined as:

$$AFUE=[0.968\eta_{SS-WT}]-1.78D_F-1.89D_S-129P_F-2.8\ L_J+1.81$$

where:

η_{SS-WT} = as defined in 4.1.16 of this appendix
D_F = as defined in 4.1.2 of this appendix
D_S = as defined in 4.1.3 of this appendix
P_F = as defined in 4.1.4 of this appendix
L_J = as defined in 4.1.5 of this appendix

4.2 *Annual fuel utilization efficiency for gas or oil fueled vented home heating equipment equipped with manual controls*. The following procedure determines the annual fuel utilization efficiency for gas or oil fueled vented home heating equipment equipped with manual controls.

4.2.1 *Average ratio of stack gas mass flow rate to flue gas mass flow rate at steady-state operation*. For vented heaters equipped with either direct vents or direct exhaust or are outdoor units, the average ratio of stack gas mass flow rate to flue gas mass flow rate at steady-state operation (S/F) shall be equal to unity. (S/F=1.) For all other types of vented heaters, calculate (S/F) defined as:

$$S/F=1.3R_{T,S}/R_{T,F}$$

where:

$R_{T,S}$ = as defined in 4.1.8 of this appendix with X_{CO2s} measured at 50% fuel input rate
$R_{T,F}$ = as defined in 4.1.7 of this appendix with X_{CO2F} measured at 50% fuel input rate

4.2.2 *Multiplication factor for infiltration loss during burner on-cycle*. Calculate the multiplication factor for infiltration loss during burner on-cycle ($K_{I,ON}$) defined as:

$$K_{I,ON} = 100(0.24)\ (S/F)\ (0.7)\ [1+R_{T,F}(A/F)]/HHV_A$$

where:

100=converts a decimal fraction into a percent
0.24=specific heat of air
A/F=stoichiometric air/fuel ratio, determined in accordance with Table 2 of this appendix
S/F=as defined in 4.2.1 of this appendix at 50 percent of rated maximum fuel input
0.7=infiltration parameter
$R_{T,F}$ = as defined in 4.1.7 of this appendix
HHV_A = average higher heating value of the test fuel, determined in accordance with Table 2 of this appendix

4.2.3 *On-cycle infiltration heat loss*. Calculate the on-cycle infiltration heat loss ($L_{I,ON}$) expressed as a percent and defined as:

$$L_{I,ON} = K_{I,ON}\ (70–45)$$

where:

$K_{I,ON}$ = as defined in 4.2.2 of this appendix
70=average indoor temperature
45=average outdoor temperature

4.2.4 *Weighted-average steady-state efficiency*.

4.2.4.1 For manually controlled heaters with various input rates the weighted average steady-state efficiency (η_{SS-WT}), is determined as follows:

(1) at 50 percent of the maximum fuel input rate as measured in either section 3.1.1 of this appendix for manually controlled gas vented heaters or section 3.1.2 of this appendix for manually controlled oil vented heaters, or

(2) at the minimum fuel input rate as measured in either section 3.1.1 to this appendix for manually controlled gas vented heaters or section 3.1.2 to this appendix for manually controlled oil vented heaters if the design of the heater is such that the ±5 percent of 50 percent of the maximum fuel input rate cannot be set, provided this minimum rate is no greater than ⅔ of maximum input rate of the heater.

4.2.4.2 For manually controlled heater with one single firing rate the weighted average steady-state efficiency is the steady-state efficiency measured at the single firing rate.

4.2.5 *Part-load fuel utilization efficiency*. Calculate the part-load fuel utilization efficiency (η_u) expressed as a percent and defined as:

$$\eta_u = \eta_{SS-WT} - L_{I,ON}$$

where:

η_{SS-WT} = as defined in 4.2.4 of this appendix
$L_{I,ON}$ = as defined in 4.2.3 of this appendix

4.2.6 *Annual Fuel Utilization Efficiency*.

4.2.6.1 For manually controlled vented heaters, calculate the AFUE expressed as a percent and defined as:

$$AFUE = \frac{2{,}950\ \eta_{SS}\ \eta_u\ Q_{in-max}}{2{,}950\ \eta_{SS}\ Q_{in-max} + 2.083(4{,}600)\eta_u\ Q_P}$$

where:

2,950=average number of heating degree days
η_{SS} = as defined as η_{SS-WT} in 4.2.4 of this appendix

η_u = as defined in 4.2.5 of this appendix
Q_{in-max} = as defined as Q_{in} at the maximum fuel input rate, as defined in 3.1 of this appendix
4,600=average number of non-heating season hours per year
Q_P = as defined in 3.5 of this appendix
2.083=(65–15)/24=50/24
65=degree day base temperature, °F
15=national average outdoor design temperature for vented heaters as defined in section 4.1.10 of this appendix
24=number of hours in a day

4.2.6.2 For manually controlled vented heaters where the pilot light can be turned off by the user when the heater is not in use as described in section 3.5.2, calculate the AFUE expressed as a percent and defined as:

$AFUE=\eta_u$

where:

η_u = as defined in section 4.2.5 of this appendix

4.3 *Annual fuel utilization efficiency by the tracer gas method*. The annual fuel utilization efficiency shall be determined by the following tracer gas method for all vented heaters equipped with thermal stack dampers. All other types of vented heaters can elect to use the following tracer gas method, as an optional procedure.

4.3.1 *On-cycle sensible heat loss*. For vented heaters equipped with single stage thermostats, calculate the on-cycle sensible heat loss ($L_{S,ON}$) expressed as a percent and defined as:

$L_{S,ON} = L_{S,SS,A}$

where:

$L_{S,SS,A}$ = as defined in 4.1.9 of this appendix

For vented heaters equipped with two stage thermostats, calculate $L_{S,ON}$ defined as:

$L_{S,ON} = X_1\ L_{S,SS,A\text{-}red}+X_2\ L_{S,SS,A\text{-}max}$

where:

X_1 = as defined in 4.1.14 of this appendix
$L_{S,SS,A\text{-}red}$ = as defined as $L_{S,SS,A}$ in 4.1.9 of this appendix at the reduced fuel input rate
X_2 = as defined in 4.1.15 of this appendix
$L_{S,SS,A\text{-}max}$ = as defined as $L_{S,SS,A}$ in 4.1.9 of this appendix at the maximum fuel input rate

For vented heaters with step-modulating thermostats, calculate $L_{S,ON}$ defined as:

$L_{S,ON} = X_1\ L_{S,SS,A\text{-}red}+X_2\ L_{S,SS,A\text{-}avg}$

where:

$X=_1$-as defined in 4.1.14 of this appendix
$L_{LS,SS,A\text{-}red}$ = as defined in 4.3.1 of this appendix
X_2 = as defined in 4.1.15 of this appendix
$L_{S,SS,A\text{-}avg}$ = average sensible heat loss for step-modulating vented heaters operating in the modulating mode

$$L_{S,SS,A-avg} = \left[\left[L_{S,SS,A-max} - L_{S,SS,A-red}\right]\left[\frac{T_C - T_{OA*}}{TC - 15}\right]\right] + L_{S,SS,A-red}$$

where:

$L_{S,SS,A\text{-}avg}$ = as defined in 4.3.1 of this appendix
T_C = as defined in 4.1.10 of this appendix
T_{OA*} = as defined in 4.1.10 of this appendix
15=as defined in 4.1.10 of this appendix

4.3.2 *On-cycle infiltration heat loss*. For vented heaters equipped with single stage thermostats, calculate the on-cycle infiltration heat loss ($L_{I,ON}$) expressed as a percent and defined as:

$L_{I,ON} = K_{I,ON}(70–45)$

where:

$K_{I,ON}$ = as defined in 4.2.2 of this appendix
70=as defined in 4.2.3 of this appendix
45=as defined in 4.2.3 of this appendix

For vented heaters equipped with two stage thermostats, calculate $L_{I,ON}$ defined as:

$L_{I,ON} = X_1K_{I,ON\text{-}Max}(70–T_{OA*})+X_2K_{I,ON,red}(70–T_{OA})$

where:

X_1 = as defined in 4.1.14 of this appendix
$K_{I,ON\text{-}max}$ = as defined as $K_{I,ON}$ in 4.2.2 of this appendix at the maximum heat input rate
70=as defined in 4.2.3 of this appendix
T_{OA*} = as defined in 4.3.4 of this appendix
$K_{I,ON,red}$ = as defined as $K_{I,ON}$ in 4.2.2 of this appendix at the minimum heat input rate
T_{OA} = as defined in 4.3.4 of this appendix
X_2 = as defined in 4.1.15 of this appendix

For vented heaters equipped with step-modulating thermostats, calculate $L_{I,ON}$ defined as:

$L_{I,ON} = X_1\ K_{I,ON\text{-}avg}(70–T_{OA*})+X_2\ K_{I,ON\text{-}red}(70–T_{OA})$

where:

X_1 = as defined in 4.1.14 of this appendix

$$K_{I,on,avg} = \frac{\left[K_{I,on,max} + K_{I,ON,red}\right]}{2}$$

70=as defined in 4.2.3 of this appendix
T_{OA*} = as defined in 4.3.4 of this appendix
X_2 = as defined in 4.1.15 of this appendix
T_{OA} = as defined in 4.3.4 of this appendix

4.3.3 *Off-cycle sensible heat loss.* For vented heaters equipped with single stage thermostats, calculate the off-cycle sensible heat loss ($L_{S,OFF}$) at the maximum fuel input rate. For vented heaters equipped with step-modulating thermostats, calculate $L_{S,OFF}$ defined as:

$L_{S,OFF} = X_1 L_{S,OFF,red}$

where:

X_1 = as defined in 4.1.14 of this appendix
$L_{S,OFF,red}$ = as defined as $L_{S,OFF}$ in 4.3.3 of this appendix at the reduced fuel input rate

For vented heaters equipped with two stage thermostats, calculate $L_{S,OFF}$ defined as:

$L_{S,OFF} = X_1 L_{S,OFF,red} + X_2 L_{S,OFF,Max}$

where:

X_1 = as defined in 4.1.14 of this appendix
$L_{S,OFF,red}$ = as defined as $L_{S,OFF}$ in 4.3.3 of this appendix at the reduced fuel input rate
X_2 = as defined in 4.1.15 of this appendix
$L_{S,OFF,Max}$ = as defined as $L_{S,OFF}$ in 4.3.3 of this appendix at the maximum fuel input rate

Calculate the off-cycle sensible heat loss ($L_{S,OFF}$) expressed as a percent and defined as:

$$L_{S,OFF} = \frac{100(0.24)}{.Q_{in} t_{on}} \sum m_{S,OFF}\left(T_{S,OFF} - T_{RA}\right)$$

where:

100=conversion factor for percent
0.24=specific heat of air in Btu per pound−°F
Q_{in} = fuel input rate, as defined in 3.1 of this appendix in Btu per minute (as appropriate for the firing rate)
t_{on} = average burner on-time per cycle and is 20 minutes
$\Sigma\, m_{S,OFF}(T_{S,OFF} - T_{RA})$=summation of the twenty values of the quantity, $m_{S,OFF}(T_{S,OFF} - T_{RA})$, measured in accordance with 3.3 of this appendix
$m_{S,OFF}$ = stack gas mass flow rate pounds per minute

$$m_{S,OFF} = \frac{1.325 P_B V_T \left(100 - C_T\right)}{C_T\left(T_T + 460\right)}$$

$T_{S,OFF}$ = stack gas temperature measured in accordance with 3.3 of this appendix
T_{RA} = average room temperature measured in accordance with 3.3 of this appendix
P_B = barometric pressure in inches of mercury
V_T = flow rate of the tracer gas through the stack in cubic feet per minute
C_{T*} = concentration by volume of the active tracer gas in the mixture in percent and is 100 when the tracer gas is a single component gas
C_T = concentration by volume of the active tracer gas in the diluted stack gas in percent
T_T = temperature of the tracer gas entering the flow meter in degrees Fahrenheit
(T_T+460)=absolute temperature of the tracer gas entering the flow meter in degrees Rankine

4.3.4 *Average outdoor temperature.* For vented heaters equipped with single stage thermostats, the average outdoor temperature (T_{OA}) is 45 °F. For vented heaters equipped with either two stage thermostats or step-modulating thermostats, T_{OA} during the reduced operating mode is obtained from Table 3 or Figure 1 of this appendix. For vented heaters equipped with two stage thermostats, T_{OA}* during the maximum operating mode is obtained from Table 3 or Figure 1 of this appendix.

4.3.5 *Off-cycle infiltration heat loss.* For vented heaters equipped with single stage thermostats, calculate the off-cycle infiltration heat loss ($L_{I,OFF}$) at the maximum fuel input rate. For vented heaters equipped with step-modulating thermostats, calculate $L_{I,OFF}$ defined as:

$L_{I,OFF} = X_1 L_{I,OFF,red}$

where:

X_1 = as defined in 4.1.14 of this appendix
$L_{I,OFF,red}$ = as defined in $L_{I,OFF}$ in 4.3.3 of this appendix at the reduced fuel input rate

For vented heaters equipped with two stage thermostats, calculate $L_{I,OFF}$ defined as:

$L_{I,OFF} = X_1 L_{I,OFF,red} + X_2 L_{I,OFF,max}$

where:

X_1 = as defined in 4.1.14 of this appendix

$L_{I,OFF,red}$ = as defined as $L_{I,OFF}$ in 4.3.3 of this appendix at the reduced fuel input rate

X_2 = as defined in 4.1.15 of this appendix

$L_{I,OFF,Max}$ = as defined as $L_{I,OFF}$ in 4.3.3 of this appendix at the maximum fuel input rate

Calculate the off-cycle infiltration heat loss ($L_{I,OFF}$) expressed as a percent and defined as:

$$L_{I,OFF} = \frac{100(0.24)(1.3)(0.7)\left(70 - T_{OA}\right)}{Q_{in} t_{on}} \sum m_{S,OFF}$$

where:

100=conversion factor for percent

0.24=specific heat of air in Btu per pound−°F

1.3=dimensionless factor for converting laboratory measured stack flow to typical field conditions

0.7=infiltration parameter

70=assumed average indoor air temperature, °F

T_{OA} = average outdoor temperature as defined in 4.3.4 of this appendix

Q_{in} = fuel input rate, as defined in 3.1 of this appendix in Btu per minute (as appropriate for the firing rate)

t_{on} = average burner on-time per cycle and is 20 minutes

$\Sigma\, m_{S,OFF}$ = summation of the twenty values of the quantity, $m_{S,OFF}$, measured in accordance with 3.3 of this appendix

$m_{S,OFF}$ = as defined in 4.3.3 of this appendix

4.3.6 *Part-load fuel utilization efficiency*. Calculate the part-load fuel utilization efficiency (η_u) expressed as a percent and defined as:

$$\eta_u = 100 - L_{L,A} - C_j L_j \left[\frac{t_{on}}{t_{on} + P_F t_{off}}\right] + \left[L_{s,on} + L_{s,OFF} + L_{I,on} + L_{s,OFF}\right]$$

where:

C_j = 2.8, adjustment factor

L_j = jacket loss as defined in 4.1.5

$L_{L,A}$ = as defined in 4.1.6 of this appendix

t_{on} = as defined in 4.3.3 of this appendix

$L_{S,ON}$ = as defined in 4.3.1 of this appendix

$L_{S,OFF}$ = as defined in 4.3.3 of this appendix

$L_{I,ON}$ = as defined in 4.3.2 of this appendix

$L_{I,OFF}$ = as defined in 4.1.4 of this appendix

P_F = as defined in 4.1.4 of this appendix

t_{OFF} = average burner off-time per cycle and is 20 minutes

4.3.7 Annual Fuel Utilization Efficiency.

Calculate the AFUE expressed as a percent and defined as:

$$AFUE = \frac{2{,}950\, \eta_{SS-WT}\, \eta_u\, Q_{in-max}}{2{,}950\, \eta_{SS-WT}\, Q_{in-max} + 2.083(4{,}600)\, \eta_u\, Q_P}$$

where:

2,950=average number of heating degree days

η_{SS-WT} = as defined in 4.1.16 of this appendix

η_u = as defined in 4.3.6 of this appendix

Q_{in-max} = as defined in 4.2.6 of this appendix

4,600=as specified in 4.2.6 of this appendix

Q_P = as defined in 3.5 of this appendix

2.083=as specified in 4.2.6 of this appendix

4.4 *Stack damper effectiveness for vented heaters equipped with electro-mechanical stack dampers*. Determine the stack damper effectiveness for vented heaters equipped with electro-mechanical stack dampers (D_o), defined as:

$D_o = 1.62\ [1 - A_D \cos \Omega / A_S]$

where:

A_D = as defined in 3.4 of this appendix
Ω=as defined in 3.4 of this appendix
A_S = as defined in 3.4 of this appendix

4.5 *Addition requirements for vented home heating equipment using indoor air for combustion and draft control.* For vented home heating equipment using indoor air for combustion and draft control, D_F, as described in section 4.1.2 of this appendix, and D_S, as described in section 4.1.3 of this appendix, shall be determined from Table 1 of this appendix.

4.5.1 *Optional procedure for determining* D_P *for vented home heating equipment.* Calculate the ratio (D_P) of the rate of flue gas mass through the vented heater during the off-period, $M_{F,OFF}(T_{F,SS})$, to the rate of flue gas mass flow during the on-period, $M_{F,SS}(T_{F,SS})$, and defined as:

$D_P = M_{F,OFF}(T_{F,SS})/M_{F,SS}(T_{F,SS})$

For vented heaters in which no draft is maintained during the steady-state or cool down tests, $M_{F,OFF}(T_{F,SS})$ is defined as:

$$M_{F,OFF}\left(T_{F,SS}\right) = M_{F,OFF}\left(T^*_{F,OFF}\right)\left[\frac{T_{F,SS} - T_{RA}}{T^*_{F,OFF} - T_{RA}}\right]^{0.56}\left[\frac{T^*_{F,OFF} + 460}{T_{F,SS} + 460}\right]^{1.19}$$

For oil fueled vented heaters in which an imposed draft is maintained, as described in section 3.6 of this appendix, $M_{F,OFF}(T_{F,SS})$ is defined as:

$M_{F,OFF}(T_{F,SS})=M_{F,OFF}(T^*_{F,SS})$

where:

$T_{F,SS}$ = as defined in 3.1.1 of this appendix
$T^*_{F,OFF}$ = flue gas temperature during the off-period measured in accordance with 3.6 of this appendix in degrees Fahrenheit
T_{RA} = as defined in 2.9 of this appendix

$$M_{F,OFF}\left(T_{F,OFF}\right) = \frac{1.325 P_B V_T \left(100 - C_T\right)}{C_T\left(T_T + 460\right)}$$

p_B = barometric pressure measured in accordance with 3.6 of this appendix in inches of mercury
V_T = flow rate of tracer gas through the vented heater measured in accordance with 3.6 of this appendix in cubic feet per minute
C_T = concentration by volume of tracer gas present in the flue gas sample measured in accordance with 3.6 of this appendix in percent
C_T*=concentration by volume of the active tracer gas in the mixture in percent and is 100 when the tracer gas is a single component gas
T_T = the temperature of the tracer gas entering the flow meter measured in accordance with 3.6 of this appendix in degrees Fahrenheit
(T_T+460)=absolute temperature of the tracer gas entering the flow meter in degrees Rankine
$M_{F,SS}(T_{F,SS})=Q_{in}[R_{T,F}(A/F)+1]/[60HHV_A]$
Q_{in} = as defined in 3.1 of this appendix
$R_{T,F}$ = as defined in 4.1.7 of this appendix
A/F=as defined in 4.2.2 of this appendix
HHV_A = as defined in 4.2.2 of this appendix

4.5.2 *Optional procedure for determining off-cycle draft factor for flue gas flow for vented heaters.* For systems numbered 1 thru 10, calculate the off-cycle draft factor for flue gas flow (D_F) defined as:

$D_F = D_P$

For systems numbered 11 or 12: $D_F = D_P\ D_O$

where:

D_p = as defined in 4.5.1. of this appendix
D_O = as defined in 4.4 of this appendix

4.5.3 *Optional procedure for determining off-cycle draft factor for stack gas flow for vented heaters.* Calculate the off-cycle draft factor for stack gas flow (D_S) defined as:

For systems numbered 1 or 2: $D_S = 1.0$
For systems numbered 3 or 4: $D_S = (D_P+0.79)/1.4$
For systems numbered 5 or 6: $D_S = D_O$
For systems numbered 7 or 8 and if $D_O(S/F)<1$:$D_S = D_O\ D_P$
For systems numbered 7 or 8 and if $D_O(S/F)>1$:

$D_S = D_O\ D_P+[0.85 - D_O\ D_P]\ [D_O(S/F) - 1]/[S/F - 1]$

where:

D_P = as defined in 4.5.1 of this appendix
D_O = as defined in 4.4 of this appendix

4.6 *Annual energy consumption.*

4.6.1 *National average number of burner operating hours.* For vented heaters equipped with single stage controls or manual controls, the national average number of burner operating hours (BOH) is defined as:

$BOH_{SS} = 1{,}416 A_F A\ DHR - 1{,}416\ B$

where:

1,416=national average heating load hours for vented heaters based on 2,950 degree days and 15 °F outdoor design temperature
A_F = 0.7067, adjustment factor to adjust the calculated design heating requirement and heating load hours to the actual

heating load experienced by the heating system

DHR=typical design heating requirements based on Q_{OUT}, from Table 4 of this appendix.

$Q_{OUT} = [(\eta_{SS}/100) - C_j (L_j/100)] Q_{in}$

L_j = jacket loss as defined in 4.1.5 of this appendix

C_j = 2.8, adjustment factor as defined in 4.3.6 of this appendix

η_{SS} = steady-state efficiency as defined in 4.1.10 of this appendix, percent

Q_{in} = as defined in 3.1 of this appendix at the maximum fuel input rate

$A=100{,}000/[341{,}300P_E+(Q_{in}-Q_P)\eta_u]$

$B=2.938(Q_P)\ \eta_u\ A/100{,}000$

100,000=factor that accounts for percent and kBtu

P_E = as defined in 3.1.3 of this appendix

Q_P = as defined in 3.5 of this appendix

η_u = as defined in 4.3.6 of this appendix for vented heaters using the tracer gas method, percent

= as defined in 4.2.5 of this appendix for manually controlled vented heaters, percent

= $2{,}950\ AFUE\eta_{SS}\ Q_{in}/[2{,}950\ \eta_{SS}\ Q_{in}—AFUE(2.083)(4{,}600)Q_P]$, for vented heaters equipped without manual controls and without thermal stack dampers and not using the optional tracer gas method, where:

AFUE=as defined in 4.1.17 of this appendix, percent

2,950=average number of heating degree days as defined in 4.2.6 of this appendix

4,600=average number of non-heating season hours per year as defined in 4.2.6 of this appendix

2.938=(4,160/1,416)=ratio of the average length of the heating season in hours to the average heating load hours

2.083=as specified in 4.2.6 of this appendix

4.6.1.1 For vented heaters equipped with two stage or step modulating controls the national average number of burner operating hours at the reduced operating mode is defined as:

$BOH_R = X_1E_M/Q_{red\text{-}in}$

where:

X_1 = as defined in 4.1.14 of this appendix

$Q_{red\text{-}in}$ = as defined in 4.1.11 of this appendix

E_M = average annual energy used during the heating season

$= (Q_{in}-Q_P)BOH_{SS}+(8{,}760-4{,}600)Q_P$

Q_{in} = as defined in 3.1 of this appendix at the maximum fuel input rate

Q_P = as defined in 3.5 of this appendix

BOH_{SS} = as defined in 4.6.1 of this appendix, in which the term P_E in the factor A is increased by the factor R, which is defined in 3.1.3 of this appendix as:

R=1.3 for two stage controls

= 1.4 for step modulating controls when the ratio of minimum-to-maximum fuel input is greater than or equal to 0.7

= 1.7 for step modulating controls when the ratio of minimum-to-maximum fuel input is less than 0.7 and greater than or equal to 0.5

= 2.2 for step modulating controls when the ratio of minimum-to-maximum fuel input is less than 0.5

$A=100{,}000/[341{,}300\ PE\ R+(Q_{in}-Q_P)\eta_u]$

8,760=total number of hours per year

4,600=as specified in 4.2.6 of this appendix

4.6.1.2 For vented heaters equipped with two stage or step modulating controls the national average number of burner operating hours at the maximum operating mode (BOH_H) is defined as:

$BOH_H = X_2E_M/Q_{in}$

where:

X_2 = as defined in 4.1.15 of this appendix

E_M = average annual energy used during the heating season

$= (Q_{in}-Q_P)BOH_{SS}+(8{,}760-4{,}600)Q_P$

Q_{in} = as defined in 3.1 of this appendix at the maximum fuel input rate

4.6.2 *Average annual fuel energy for gas or oil fueled vented heaters.* For vented heaters equipped with single stage controls or manual controls, the average annual fuel energy consumption (E_F) is expressed in Btu per year and defined as:

$E_F = BOH_{SS}\ (Q_{in}-Q_P)+8{,}760\ Q_P$

where:

BOH_{SS} = as defined in 4.6.1 of this appendix

Q_{in} = as defined in 3.1 of this appendix

Q_P = as defined in 3.5 of this appendix

8,760=as specified in 4.6.1 of this appendix

4.6.2.1 For vented heaters equipped with either two stage or step modulating controls E_F is defined as:

$E_F = E_M+4{,}600Q_P$

where:

E_M = as defined in 4.6.1.2 of this appendix

4,600=as specified 4.2.6 of this appendix

Q_P = as defined in 3.5 of this appendix

4.6.3 *Average annual auxiliary electrical energy consumption for vented heaters.* For vented heaters with single-stage controls or manual controls, the average annual auxiliary electrical consumption (E_{AE}) is expressed in kilowatt-hours and defined as:

$E_{AE} = BOH_{SS}P_E + E_{SO}$

Where:

BOH_{SS} = as defined in 4.6.1 of this appendix

P_E = as defined in 3.1.3 of this appendix

E_{SO} = as defined in 4.7 of this appendix

4.6.3.1 For vented heaters with two-stage or modulating controls, E_{AE} is defined as:

$E_{AE} = (BOH_R + BOH_H)P_E + E_{SO}$

Where:

BOH_R = as defined in 4.6.1 of this appendix
BOH_H = as defined in 4.6.1 of this appendix
P_E = as defined in 3.1.3 of this appendix
E_{SO} = as defined in 4.7 of this appendix

4.6.4 *Average annual energy consumption for vented heaters located in a different geographic region of the United States and in buildings with different design heating requirements.*

4.6.4.1 *Average annual fuel energy consumption for gas or oil fueled vented home heaters located in a different geographic region of the United States and in buildings with different design heating requirements.* For gas or oil fueled vented heaters the average annual fuel energy consumption for a specific geographic region and a specific typical design heating requirement (E_{FR}) is expressed in Btu per year and defined as:

$$E_{FR} = (E_F - 8{,}760\ Q_P)(HLH/1{,}416) + 8{,}760 Q_P$$

where:

E_F = as defined in 4.6.2 of this appendix
8,760=as specified in 4.6.1 of this appendix
Q_P = as defined in 3.5 of this appendix
HLH=heating load hours for a specific geographic region determined from the heating load hour map in Figure 3 of this appendix
1,416=as specified in 4.6.1 of this appendix

4.6.4.2 *Average annual auxiliary electrical energy consumption for gas or oil fueled vented home heaters located in a different geographic region of the United States and in buildings with different design heating requirements.* For gas or oil fueled vented home heaters the average annual auxiliary electrical energy consumption for a specific geographic region and a specific typical design heating requirement (E_{AER}) is expressed in kilowatt-hours and defined as:

$$E_{AER} = E_{AE}\ HLH/1{,}416$$

where:

E_{AE} = as defined in 4.6.3 of this appendix
HLH=as defined in 4.6.4.1 of this appendix
1,416=as specified in 4.6.1 of this appendix

TABLE 1—OFF-CYCLE DRAFT FACTORS FOR FLUE GAS FLOW (D_F) AND FOR STACK GAS FLOW (D_S) FOR VENTED HOME HEATING EQUIPMENT EQUIPPED WITHOUT THERMAL STACK DAMPERS

System number	(D_F)	(D_S)	Burner type	Venting system type [1]
1	1.0	1.0	Atmospheric	Draft hood or diverter.
2	0.4	1.0	Power	Draft hood or diverter.
3	1.0	1.0	Atmospheric	Barometric draft regulator.
4	0.4	0.85	Power	Barometric draft regulator.
5	1.0	D_o	Atmospheric	Draft hood or diverter with damper.
6	0.4	D_o	Power	Draft hood or diverter with damper.
7	1.0	D_o	Atmospheric	Barometric draft regulator with damper.
8	0.4	D_o D_p	Power	Barometric draft regulator with damper.
9	1.0	.....	Atmospheric	Direct vent.
10	0.4	.....	Power	Direct vent.
11	D_o	.....	Atmospheric	Direct vent with damper.
12	0.4 D_o	.....	Power	Direct vent with damper.

[1] Venting systems listed with dampers means electro-mechanical dampers only.

TABLE 2—VALUES OF HIGHER HEATING VALUE ($HHV_{(A)}$), STOICHIOMETRIC AIR/FUEL (A/F), LATENT HEAT LOSS ($L_{L,A}$) AND FUEL-SPECIFIED PARAMETERS (A, B, C, AND D) FOR TYPICAL FUELS

Fuels	HHV_A (Btu/lb)	A/F	$L_{L,A}$	A	B	C	D
No. 1 oil	19,800	14.56	6.55	0.0679	14.22	0.0179	0.167
No. 2 oil	19,500	14.49	6.50	0.0667	14.34	0.0181	0.167
Natural gas	20,120	14.45	9.55	0.0919	10.96	0.0175	0.171
Manufactured gas	18,500	11.81	10.14	0.0965	10.10	0.0155	0.235
Propane	21,500	15.58	7.99	0.0841	12.60	0.0177	0.151
Butane	20,000	15.36	7.79	0.0808	12.93	0.0180	0.143

TABLE 3—FRACTION OF HEATING LOAD AT REDUCED OPERATING MODE (X1) AND AT MAXIMUM OPERATING MODE (X2), AVERAGE OUTDOOR TEMPERATURES (TOA AND TOA*), AND BALANCE POINT TEMPERATURE (TC) FOR VENTED HEATERS EQUIPPED WITH EITHER TWO-STAGE THERMOSTATS OR STEP-MODULATING THERMOSTATS

Heat output ratio [a]	X1	X2	TOA	TOA*	TC
0.20 to 0.24	.12	.88	57	40	53
0.25 to 0.29	.16	.84	56	39	51
0.30 to 0.34	.20	.80	54	38	49
0.35 to 0.39	.30	.70	53	36	46
0.40 to 0.44	.36	.64	52	35	44
0.45 to 0.49	.43	.57	51	34	42
0.50 to 0.54	.52	.48	50	32	39
0.55 to 0.59	.60	.40	49	30	37
0.60 to 0.64	.70	.30	48	29	34
0.65 to 0.69	.76	.24	47	27	32
0.70 to 0.74	.84	.16	46	25	29
0.75 to 0.79	.88	.12	46	22	27
0.80 to 0.84	.94	.06	45	20	23
0.85 to 0.89	.96	.04	45	18	21
0.90 to 0.94	.98	.02	44	16	19
0.95 to 0.99	.99	.01	44	13	17

[a] The heat output ratio means the ratio of minimum to maximum heat output rates as defined in 4.1.13.

TABLE 4—AVERAGE DESIGN HEATING REQUIREMENTS FOR VENTED HEATERS WITH DIFFERENT OUTPUT CAPACITIES

Vented heaters output capacity Q_{out}—(Btu/hr)	Average design heating requirements (kBtu/hr)
5,000–7,499	5.0
7,500–10,499	7.5
10,500–13,499	10.0
13,500–16,499	12.5
16,500–19,499	15.0
19,500–22,499	17.5
22,500–26,499	20.5
26,500–30,499	23.5
30,500–34,499	26.5
34,500–38,499	30.0
38,500–42,499	33.5
42,500–46,499	36.5
46,500–51,499	40.0
51,500–56,499	44.0
56,500–61,499	48.0
61,500–66,499	52.0
66,500–71,499	56.0
71,500–76,500	60.0

FIGURE 1

Average Outdoor Air Temperature vs. Balance Point Temperature for Modulating Vented Heaters

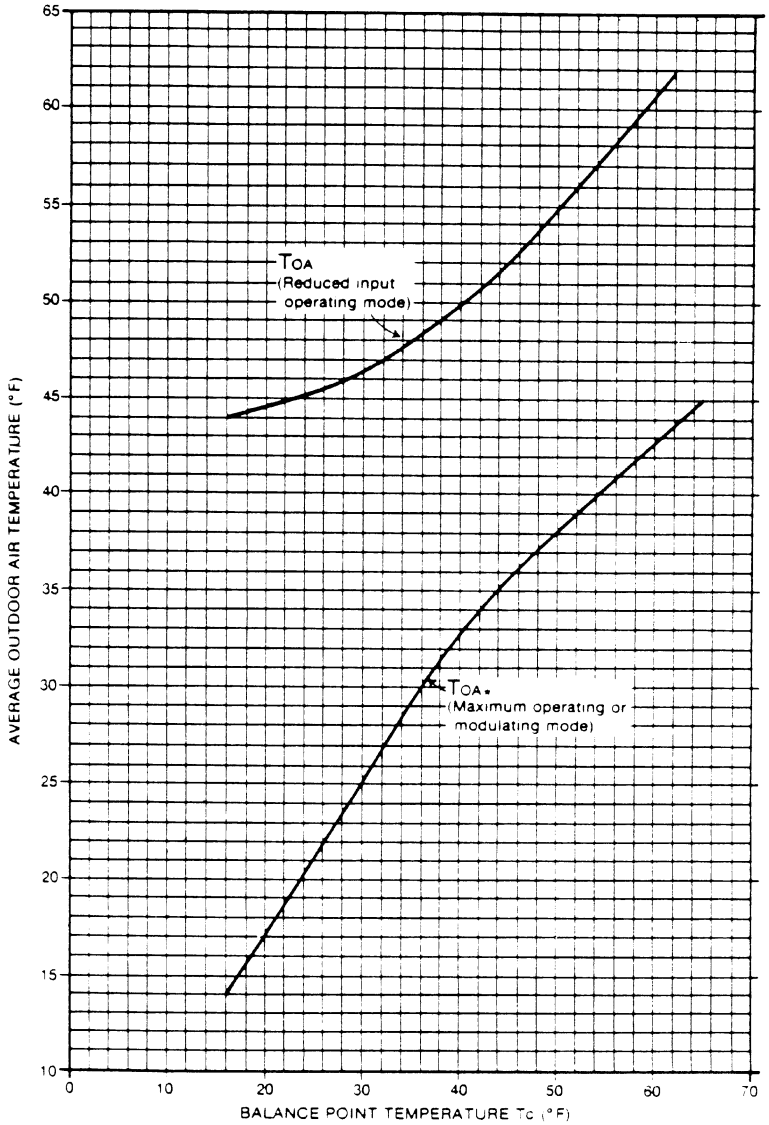

This figure is based on 4500 degree-days and 15°F outdoor design temperature.

FIGURE 2

Fraction of Total Annual Heating Load Applicable to Reduced Operating Mode (X_1) and to Maximum Operating Mode or Modulating Mode (X_2) vs. Balance Point Temperature for Modulating Vented Heaters

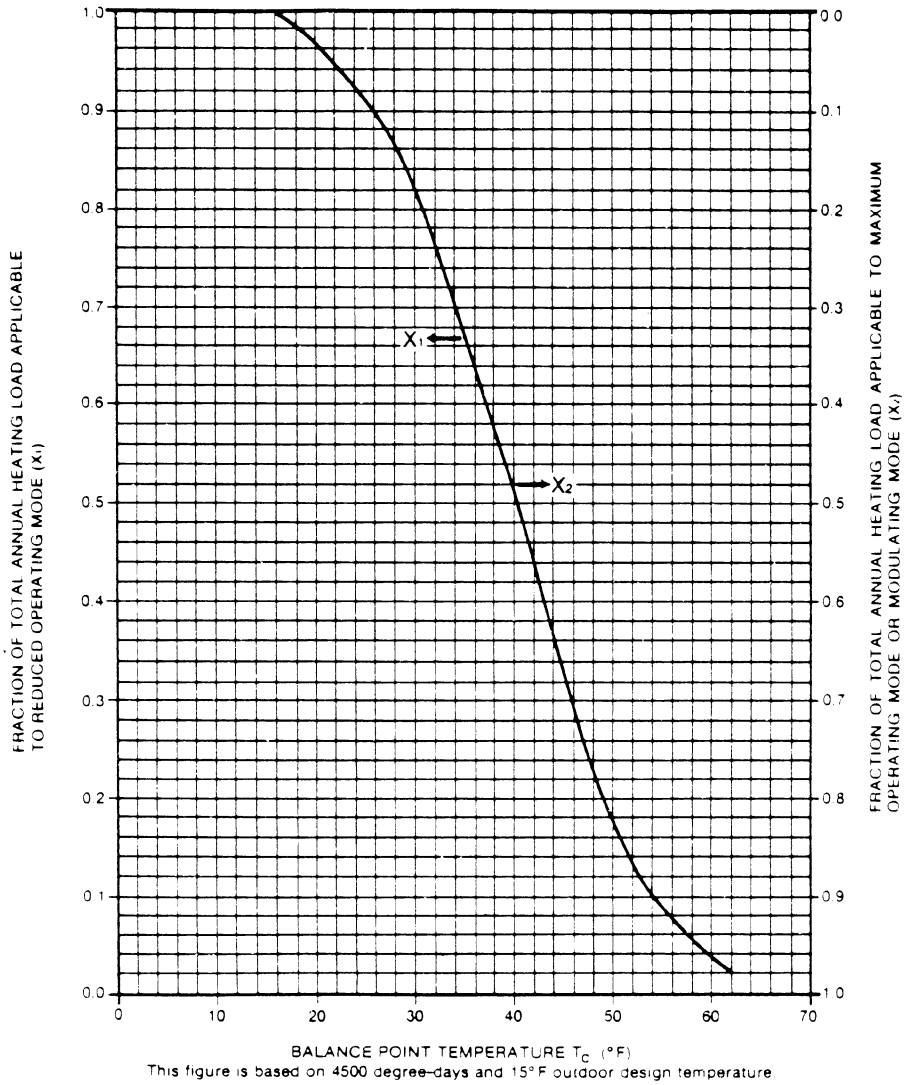

This figure is based on 4500 degree-days and 15°F outdoor design temperature.

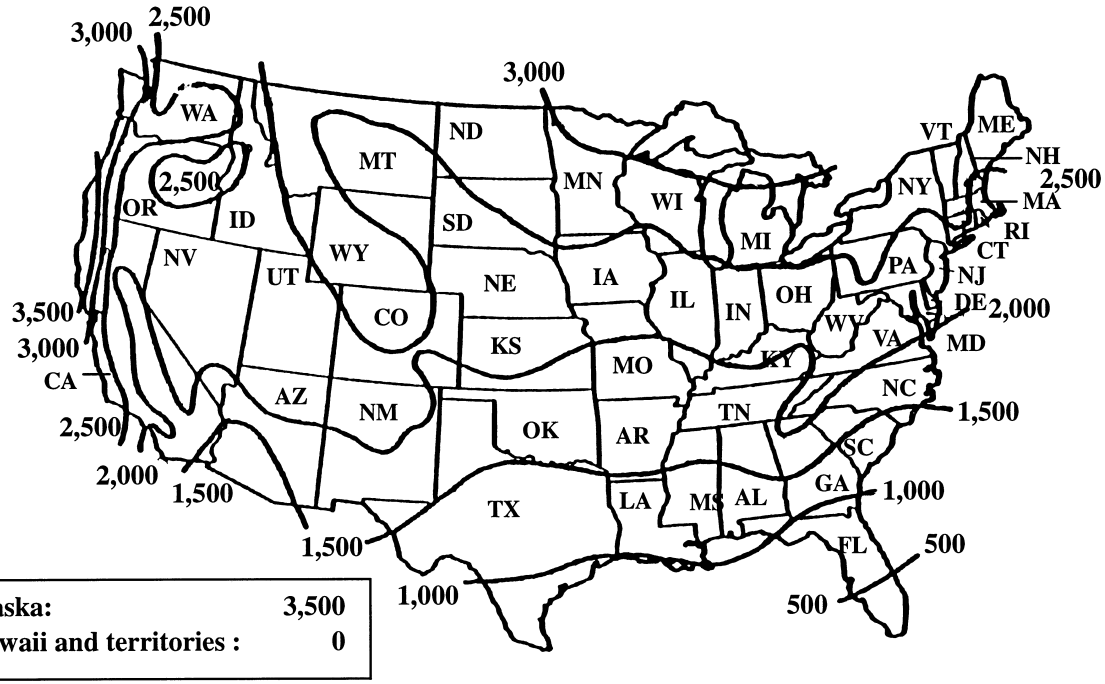

This map is reasonably accurate for most parts of the United States but is necessarily generalized, and consequently not too accurate in mountainous regions, particularly in the rockies.

FIGURE 3- HEATING LOAD HOURS (HLH) FOR THE UNITED STATES

4.7 *Average annual electric standby mode and off mode energy consumption.*

Calculate the annual electric standby mode and off mode energy consumption, E_{SO}, defined as, in kilowatt-hours:

$$E_{SO} = ((P_{W,SB} * (4160 - BOH)) + (P_{W,OFF} * 4600)) * K$$

Where:

$P_{W,SB}$ = vented heater standby mode power, in watts, as measured in section 3.7 of this appendix

4160 = average heating season hours per year

$P_{W,OFF}$ = vented heater off mode power, in watts, as measured in section 3.7 of this appendix

4600 = average non-heating season hours per year

K = 0.001 kWh/Wh, conversion factor for watt-hours to kilowatt-hours

BOH = burner operating hours as calculated in section 4.6.1 of this appendix where for single-stage controls or manual controls vented heaters BOH = BOH_{SS} and for vented heaters equipped with two-stage or modulating controls BOH = (BOH_R + BOH_H).

[49 FR 12169, Mar. 28, 1984, as amended at 62 FR 26162, May 12, 1997; 77 FR 74571, Dec. 17, 2012]

APPENDIX P TO SUBPART B OF PART 430—UNIFORM TEST METHOD FOR MEASURING THE ENERGY CONSUMPTION OF POOL HEATERS

NOTE: The procedures and calculations that refer to standby mode and off mode energy consumption (*i.e.*, sections 2.2, 2.3, 3.2, 4.2, 4.3, 5.3 equation (3), and 5.4 of this appendix P) need not be performed to determine compliance with energy conservation standards for pool heaters at this time. However, on or after June 17, 2013, any representations related to standby mode and off mode energy consumption of these products must be based upon results generated under this test procedure, consistent with the requirements of 42 U.S.C. 6293(c)(2). For pool heaters, the statute requires that after July 1, 2010, any adopted energy conservation standard shall incorporate standby mode and off mode energy consumption, and upon the compliance date for such standards, compliance with the applicable provisions of this test procedure will also be required.

1. *Definitions.*

1.1 *Active mode* means the condition during the pool heating season in which the pool heater is connected to the power source, and the main burner, electric resistance element, or heat pump is activated to heat pool water.

1.2 *IEC 62301* (Second Edition) means the test standard published by the International Electrotechnical Commission, titled ''Household electrical appliances—Measurement of standby power,'' Publication 62301, Edition 2.0 2011–01. (incorporated by reference; see §430.3)

1.3 *Off mode* means the condition during the pool non-heating season in which the pool heater is connected to the power source, and neither the main burner, electric resistance elements, nor heat pump is activated.

1.4 *Seasonal off switch* means a switch present on the pool heater that effects a difference in off mode energy consumption as compared to standby mode energy consumption.

1.5 *Standby mode* means the condition during the pool heating season in which the pool heater is connected to the power source, and neither the main burner, electric resistance elements, nor heat pump is activated.

2. *Test Method.*

2.1 *Active mode.* The test method for testing pool heaters in active mode is as specified in section 2.10 of ANSI Z21.56 (incorporated by reference; see §430.3).

2.2 *Standby mode.* The test method for testing the energy consumption of pool heaters in standby mode is as described in sections 3 through 5 of this appendix.

2.3 *Off mode.*

2.3.1 *Pool heaters with a seasonal off switch.* For pool heaters with a seasonal off switch, no off-mode test is required.

2.3.2 *Pool heaters without a seasonal off switch.*

For pool heaters without a seasonal off switch, the test method for testing the energy consumption of the pool heater is as described in sections 3 through 5 of this appendix.

3. *Test conditions.*

3.1 *Active mode.* Establish the test conditions specified in section 2.10 of ANSI Z21.56 (incorporated by reference; see §430.3).

3.2 *Standby mode and off mode.* Following the conclusion of the 30-minute active mode test described in section 2.10 of ANSI Z21.56 (incorporated by reference; see §430.3), reduce the thermostat setting to a low enough temperature to put the pool heater into standby mode. Operate the pool heater in standby mode for 60 minutes.

4. *Measurements.*

4.1 *Active mode.* Measure the quantities delineated in section 2.10 of ANSI Z21.56 (incorporated by reference; see §430.3). The measurement of energy consumption for oil-fired pool heaters in Btu is to be carried out in appropriate units (*e.g.*, gallons).

4.2 *Standby mode.* Record the average electric power consumption during the standby mode test, $P_{W,SB}$, in W, in accordance with section 5 of IEC 62301 (Second Edition) (incorporated by reference; see §430.3) and the fossil fuel energy consumption during the standby test, Q_p, in Btu. Ambient temperature and voltage specifications of ANSI Z21.56 (incorporated by reference; see §430.3) shall apply to this standby mode testing. The recorded standby power ($P_{W,SB}$) shall be rounded to the second decimal place, and for loads greater than or equal to 10W, at least three significant figures shall be reported.

4.3 *Off mode.*

4.3.1 *Pool heaters with a seasonal off switch.* For pool heaters with a seasonal off switch, the average electric power consumption during the off mode, $P_{W,OFF}$ = 0, and the fossil fuel energy consumed during the off mode, Q_{off} = 0.

4.3.2 *Pool heaters without a seasonal off switch.* Record the average electric power consumption during the standby/off mode test, $P_{W,OFF}$ (= $P_{W,SB}$), in W, in accordance with section 5 of IEC 62301 (Second Edition)

(incorporated by reference; see §430.3), and the fossil fuel energy consumption during the off mode test, Q_{off} (= Q_p), in Btu. Ambient temperature and voltage specifications of ANSI Z21.56 (incorporated by reference; see §430.3) shall apply to this off mode testing. The recorded off mode power ($P_{W,OFF}$) shall be rounded to the second decimal place, and for loads greater than or equal to 10W, at least three significant figures shall be reported.

5. *Calculations.*

5.1 *Thermal efficiency.* Calculate the thermal efficiency, E_t (expressed as a percent), as specified in section 2.10 of ANSI Z21.56 (incorporated by reference; see §430.3). The expression of fuel consumption for oil-fired pool heaters shall be in Btu.

5.2 *Average annual fossil fuel energy for pool heaters.* The average annual fuel energy for pool heaters, E_F, is defined as:

E_F = BOH Q_{IN} + (POH − BOH)Q_{PR} + (8760 − POH) $Q_{off,R}$

Where:

BOH = average number of burner operating hours = 104 h

POH = average number of pool operating hours = 4464 h

Q_{IN} = rated fuel energy input as defined according to section 2.10.1 or section 2.10.2 of ANSI Z21.56, as appropriate.

Q_{PR} = average energy consumption rate of continuously operating pilot light, if employed, = (Q_P/1 h)

Q_P = energy consumption of continuously operating pilot light, if employed, as measured in section 4.2 of this appendix, in Btu

8760 = number of hours in one year

$Q_{off,R}$ = average off mode fossil fuel energy consumption rate = Q_{off}/(1 h)

Q_{off} = off mode energy consumption as defined in section 4.3 of this appendix

5.3 *Average annual auxiliary electrical energy consumption for pool heaters.* The average annual auxiliary electrical energy consumption for pool heaters, E_{AE}, is expressed in Btu and defined as:

(1) $E_{AE} = E_{AE,active} + E_{AE,standby,off}$

(2) $E_{AE,active}$ = BOH * PE

(3) $E_{AE,standby,off}$ = (POH − BOH) $P_{W,SB}$(Btu/h) + (8760 − POH) $P_{W,OFF}$(Btu/h)

Where:

$E_{AE,active}$ = auxiliary electrical consumption in the active mode

$E_{AE,standby,off}$ = auxiliary electrical consumption in the standby mode and off mode

PE = $2E_c$, if heater is tested according to section 2.10.1 of ANSI Z21.56, in Btu/h = 3.412 PE_{rated}, if heater is tested according to section 2.10.2 of ANSI Z21.56, in Btu/h

E_c = electrical consumption of the heater (converted to equivalent unit of Btu), including the electrical energy to the recirculating pump if used, during the 30-minute thermal efficiency test, as defined in section 2.10.1 of ANSI Z21.56, in Btu per 30 min.

2 = conversion factor to convert unit from per 30 min. to per h.

PE_{rated} = nameplate rating of auxiliary electrical equipment of heater, in Watts

BOH = as defined in 5.2 of this appendix

POH = as defined in 5.2 of this appendix

$P_{W,SB}$ (Btu/h) = electrical energy consumption rate during standby mode expressed in Btu/h = 3.412 $P_{W,SB}$, Btu/h

$P_{W,SB}$ = as defined in 4.2 of this appendix

$P_{W,OFF}$ (Btu/h) = electrical energy consumption rate during off mode expressed in Btu/h = 3.412 $P_{W,OFF}$, Btu/h

$P_{W,OFF}$ = as defined in 4.3 of this appendix

5.4 Integrated thermal efficiency.

5.4.1 Calculate the seasonal useful output of the pool heater as:

E_{OUT} = BOH[(E_t/100)(Q_{IN} + PE)]

Where:

BOH = as defined in 5.2 of this appendix

E_t = thermal efficiency as defined in 5.1 of this appendix

Q_{IN} = as defined in 5.2 of this appendix

PE = as defined in 5.3 of this appendix

100 = conversion factor, from percent to fraction

5.4.2 Calculate the annual input to the pool heater as:

$E_{IN} = E_F + E_{AE}$

Where:

E_F = as defined in 5.2 of this appendix

E_{AE} = as defined in 5.3 of this appendix

5.4.3 Calculate the pool heater integrated thermal efficiency (TE_I) (in percent).

TE_I = 100(E_{OUT}/E_{IN})

Where:

E_{OUT} = as defined in 5.4.1 of this appendix

E_{IN} = as defined in 5.4.2 of this appendix

100 = conversion factor, from fraction to percent

[77 FR 74572, Dec. 17, 2012]

APPENDIX Q TO SUBPART B OF PART 430—UNIFORM TEST METHOD FOR MEASURING THE ENERGY CONSUMPTION OF FLUORESCENT LAMP BALLASTS

Comply with Appendix Q until November 14, 2014. After this date, all fluorescent lamp ballasts shall be tested using the provisions of Appendix Q1.

1. Definitions

1.1 *AC control signal* means an alternating current (AC) signal that is supplied to the ballast using additional wiring for the purpose of controlling the ballast and putting the ballast in standby mode.

1.2 *ANSI Standard* means a standard developed by a committee accredited by the American National Standards Institute.

1.3 *Ballast input voltage* means the rated input voltage of a fluorescent lamp ballast.

1.4 *DC control signal* means a direct current (DC) signal that is supplied to the ballast using additional wiring for the purpose of controlling the ballast and putting the ballast in standby mode.

1.5 *F40T12 lamp* means a nominal 40 watt tubular fluorescent lamp which is 48 inches in length and one and a half inches in diameter, and conforms to ANSI C78.81 (Data Sheet 7881–ANSI–1010–1) (incorporated by reference; see § 430.3).

1.6 *F96T12 lamp* means a nominal 75 watt tubular fluorescent lamp which is 96 inches in length and one and a half inches in diameter, and conforms to ANSI C78.81 (Data Sheet 7881–ANSI–3007–1) (incorporated by reference; see § 430.3).

1.7 *F96T12HO lamp* means a nominal 110 watt tubular fluorescent lamp that is 96 inches in length and one and a half inches in diameter, and conforms to ANSI C78.81 (Data Sheet 7881–ANSI–1019–1) (incorporated by reference; see § 430.3).

1.8 *F34T12 lamp* (also known as a ''F40T12/ES lamp'') means a nominal 34 watt tubular fluorescent lamp that is 48 inches in length and one and a half inches in diameter, and conforms to ANSI C78.81 (Data Sheet 7881–ANSI–1006–1) (incorporated by reference; see § 430.3).

1.9 *F96T12/ES lamp* means a nominal 60 watt tubular fluorescent lamp that is 96 inches in length and one and a half inches in diameter, and conforms to ANSI C78.81 (Data Sheet 7881–ANSI–3006–1) (incorporated by reference; see § 430.3).

1.10 *F96T12HO/ES lamp* means a nominal 95 watt tubular fluorescent lamp that is 96 inches in length and one and a half inches in diameter, and conforms to ANSI C78.81 (Data Sheet 7881–ANSI–1017–1) (incorporated by reference; see § 430.3).

1.11 *Input current* means the root-mean-square (RMS) current in amperes delivered to a fluorescent lamp ballast.

1.12 *Luminaire* means a complete lighting unit consisting of a fluorescent lamp or lamps, together with parts designed to distribute the light, to position and protect such lamps, and to connect such lamps to the power supply through the ballast.

1.13 *Nominal lamp watts* means the wattage at which a fluorescent lamp is designed to operate.

1.14 *PLC control signal* means a power line carrier (PLC) signal that is supplied to the ballast using the input ballast wiring for the purpose of controlling the ballast and putting the ballast in standby mode.

1.15 *Power Factor* means the power input divided by the product of ballast input voltage and input current of a fluorescent lamp ballast, as measured under test conditions specified in ANSI C82.2 (incorporated by reference; see § 430.3).

1.16 *Power input* means the power consumption in watts of a ballast a fluorescent lamp or lamps, as determined in accordance with the test procedures specified in ANSI C82.2 (incorporated by reference; see § 430.3).

1.17 *Relative light output* means the light output delivered through the use of a ballast divided by the light output of a reference ballast, expressed as a percent, as determined in accordance with the test procedures specified in ANSI C82.2 (incorporated by reference; see § 430.3).

1.18 *Residential building* means a structure or portion of a structure which provides facilities or shelter for human residency, except that such term does not include any multifamily residential structure of more than three stores above grade.

1.19 *Standby mode* means the condition in which an energy-using product—

(a) Is connected to a main power source; and

(b) Offers one or more of the following user-oriented or protective functions:

(i) To facilitate the activation or deactivation of other functions (including active mode) by remote switch (including remote control), internal sensor, or timer.

(ii) Continuous functions, including information or status displays (including clocks) or sensor-based functions.

1.20 *Wireless control signal* means a wireless signal that is radiated to and received by the ballast for the purpose of controlling the ballast and putting the ballast in standby mode.

2. *Test Conditions.*

2.1 *Measurement of Active Mode Energy Consumption, BEF.* The test conditions for testing fluorescent lamp ballasts shall be done in accordance with ANSI C82.2 (incorporated by reference; see § 430.3). Any subsequent amendment to this standard by the standard setting organization will not affect the DOE test procedures unless and until amended by DOE. The test conditions for measuring active mode energy consumption are described in sections 4, 5, and 6 of ANSI C82.2. The test conditions described in this section (2.1) are applicable to section 3.1 of section 3, Test Method and Measurements. For section 2.1 and 3, ANSI C78.81 (incorporated by reference; see § 430.3), ANSI C82.1 (incorporated by reference; see § 430.3), ANSI C82.11 (incorporated by reference; see § 430.3), and ANSI C82.13 (incorporated by reference; see § 430.3) shall be used when applying ANSI C82.2 instead of the versions listed as normative references in ANSI C82.2.

2.2 *Measurement of Standby Mode Power.* The measurement of standby mode power need not be performed to determine compliance with energy conservation standards for fluorescent lamp ballasts at this time. This and the previous statement will be removed

as part of a rulemaking to amend the energy conservation standards for fluorescent lamp ballasts to account for standby mode energy consumption, and the following shall apply on the compliance date for any such requirements.

The test conditions for testing fluorescent lamp ballasts shall be done in accordance with ANSI C82.2 (incorporated by reference; see §430.3). Any subsequent amendment to this standard by the standard setting organization will not affect the DOE test procedures unless and until amended by DOE. The test conditions for measuring standby power are described in sections 5, 7, and 8 of ANSI C82.2. Fluorescent lamp ballasts that are capable of connections to control devices shall be tested with all commercially available compatible control devices connected in all possible configurations. For each configuration, a separate measurement of standby power shall be made in accordance with section 3.2 of the test procedure.

3. TEST METHOD AND MEASUREMENTS

3.1 Active Mode Energy Efficiency Measurement

3.1.1 The test method for testing the active mode energy efficiency of fluorescent lamp ballasts shall be done in accordance with ANSI C82.2 (incorporated by reference; see §430.3). Where ANSI C82.2 references ANSI C82.1–1997, the operator shall use ANSI C82.1 (incorporated by reference; see §430.3) for testing low-frequency ballasts and ANSI C82.11 (incorporated by reference; see §430.3) for high-frequency ballasts.

3.1.2 *Instrumentation.* The instrumentation shall be as specified by sections 5, 7, 8, and 15 of ANSI C82.2 (incorporated by reference; see §430.3).

3.1.3 *Electric Supply.*

3.1.3.1 *Input Power.* Measure the input power (watts) to the ballast in accordance with ANSI C82.2 (incorporated by reference; see §430.3), section 4.

3.1.3.2 *Input Voltage.* Measure the input voltage (volts) (RMS) to the ballast in accordance with ANSI C82.2 (incorporated by reference; see §430.3), section 3.2.1 and section 4.

3.1.3.3 *Input Current.* Measure the input current (amps) (RMS) to the ballast in accordance with ANSI C82.2 (incorporated by reference; see §430.3), section 3.2.1 and section 4.

3.1.4 *Light Output.*

3.1.4.1 Measure the light output of the reference lamp with the reference ballast in accordance with ANSI C82.2 (incorporated by reference; see §430.3), section 12.

3.1.4.2 Measure the light output of the reference lamp with the test ballast in accordance with ANSI C82.2 (incorporated by reference; see §430.3), section 12.

3.2 Standby Mode Power Measurement

3.2.1 The test for measuring standby mode energy consumption of fluorescent lamp ballasts shall be done in accordance with ANSI C82.2 (incorporated by reference; see §430.3).

3.2.2. Send a signal to the ballast instructing it to have zero light output using the appropriate ballast communication protocol or system for the ballast being tested.

3.2.3 *Input Power.* Measure the input power (watts) to the ballast in accordance with ANSI C82.2–2002, section 13, (incorporated by reference; *see* §430.3).

3.2.4 *Control Signal Power.* The power from the control signal path will be measured using all applicable methods described below.

3.2.4.1 *AC Control Signal.* Measure the AC control signal power (watts), using a wattmeter (W), connected to the ballast in accordance with the circuit shown in Figure 1.

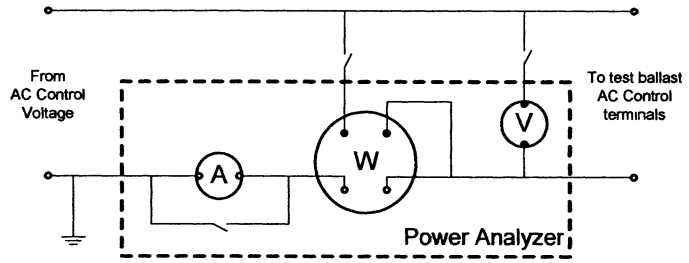

Figure 1: Circuit for Measuring AC Control Signal Power in Standby Mode

3.2.4.2 *DC Control Signal.* Measure the DC control signal voltage, using a voltmeter (V), and current, using an ammeter (A), connected to the ballast in accordance with the circuit shown in Figure 2. The DC control signal power is calculated by multiplying the DC control signal voltage and the DC control signal current.

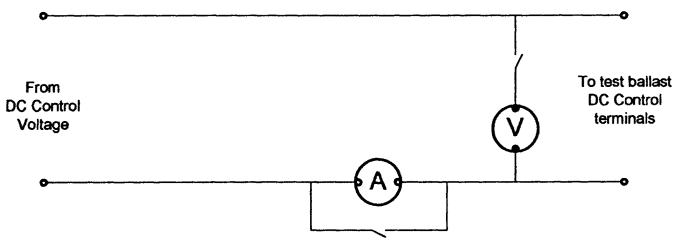

Figure 2: Circuit for Measuring DC Control Signal Power in Standby Mode

3.2.4.3 *Power Line Carrier (PLC) Control Signal.* Measure the PLC control signal power (watts), using a wattmeter (W), connected to the ballast in accordance with the circuit shown in Figure 3. The wattmeter must have a frequency response that is at least 10 times higher than the PLC being measured in order to measure the PLC signal correctly. The wattmeter must also be high-pass filtered to filter out power at 60 Hertz.

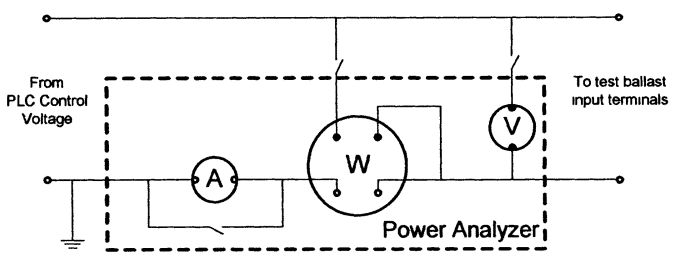

Figure 3: Circuit for Measuring PLC Control Signal Power in Standby Mode

3.2.4.4 *Wireless Control Signal.* The power supplied to a ballast using a wireless signal is not easily measured, but is estimated to be well below 1.0 watt. Therefore, the wireless control signal power is not measured as part of this test procedure.

4. *Calculations.*

4.1 Calculate relative light output:

$$\text{relative light output} = \frac{\text{Photocell output of lamp on test ballast}}{\text{Photocell output of lamp on reference ballast}} \times 100$$

Where: photocell output of lamp on test ballast is determined in accordance with section 3.1.4.2, expressed in watts, and photocell output of lamp on ref. ballast is determined in accordance with section 3.1.4.1, expressed in watts.

4.2. Determine the Ballast Efficacy Factor (BEF) using the following equations:

(a) Single lamp ballast

$$BEF = \frac{\text{relative light output}}{\text{input power}}$$

(b) Multiple lamp ballast

$$BEF = \frac{\text{average relative light output}}{\text{input power}}$$

Where:

Input power is determined in accordance with section 3.1.3.1, relative light output as defined in section 4.1, and average relative light output is the relative light output, as defined in section 4.1, for all lamps, divided by the total number of lamps.

4.3 Determine Ballast Power Factor (PF):

$$PF = \frac{\textit{Input power}}{\text{Input voltage} \times \text{input current}}$$

Where:

Input power is as defined in section 3.1.3.1, Input voltage is determined in accordance with section 3.1.3.2, expressed in volts, and Input current is determined in accordance with section 3.1.3.3, expressed in amps.

[54 FR 6076, Feb. 7, 1989, as amended at 56 FR 18682, Apr. 24, 1991; 69 FR 18803, Apr. 9, 2004; 70 FR 60412, Oct. 18, 2005; 74 FR 54455, Oct. 22, 2009; 76 FR 25223, May 4, 2011; 76 FR 70628, Nov. 14, 2011; 77 FR 4216, Jan. 27, 2012]

APPENDIX Q1 TO SUBPART B OF PART 430—UNIFORM TEST METHOD FOR MEASURING THE ENERGY CONSUMPTION OF FLUORESCENT LAMP BALLASTS

Comply with Appendix Q1 beginning November 14, 2014. Prior to this date, all fluorescent lamp ballasts shall be tested using the provisions of Appendix Q.

1. DEFINITIONS

1.1. *AC control signal* means an alternating current (AC) signal that is supplied to the ballast using additional wiring for the purpose of controlling the ballast and putting the ballast in standby mode.

1.2. *Active Mode* means the condition in which an energy-using product—

(a) Is connected to a main power source;

(b) Has been activated; and

(c) Provides 1 or more main functions.

1.3. *Cathode heating* refers to power delivered to the lamp by the ballast for the purpose of raising the temperature of the lamp electrode or filament.

1.4. *Commercial ballast* is a fluorescent lamp ballast that is not a residential ballast as defined in section 1.13 and meets technical standards for non-consumer radio frequency lighting devices as specified in subpart C of 47 CFR part 18.

1.5. *DC control signal* means a direct current (DC) signal that is supplied to the ballast using additional wiring for the purpose of controlling the ballast and putting the ballast in standby mode.

1.6. *High-frequency ballast* is as defined in ANSI C82.13 (incorporated by reference; see § 430.3).

1.7. *Instant-start* is the starting method used instant-start systems as defined in ANSI C82.13 (incorporated by reference; see § 430.3).

1.8. *Low-frequency ballast* is a fluorescent lamp ballast that operates at a supply frequency of 50 to 60 Hz and operates the lamp at the same frequency as the supply.

1.9. *PLC control signal* means a power line carrier (PLC) signal that is supplied to the ballast using the input ballast wiring for the purpose of controlling the ballast and putting the ballast in standby mode.

1.10. *Programmed-start* is the starting method used in programmed-start systems as defined in ANSI C82.13 (incorporated by reference; see § 430.3).

1.11. *Rapid-start* is the starting method used in rapid-start type systems as defined

in ANSI C82.13 (incorporated by reference; see § 430.3).

1.12. *Reference lamp* is a fluorescent lamp that meets certain operating conditions as defined by ANSI C82.13 (incorporated by reference; see § 430.3).

1.13. *Residential ballast* is a fluorescent lamp ballast designed and labeled for use in residential applications. Residential ballasts must meet the technical standards for consumer RF lighting devices as specified in subpart C of 47 CFR part 18.

1.14. *RMS* is the root mean square of a varying quantity.

1.15. *Standby mode* means the condition in which an energy-using product—

(a) Is connected to a main power source; and

(b) Offers one or more of the following user-oriented or protective functions:

(i) To facilitate the activation or deactivation of other functions (including active mode) by remote switch (including remote control), internal sensor, or timer.

(ii) Continuous functions, including information or status displays (including clocks) or sensor-based functions.

1.16. *Wireless control signal* means a wireless signal that is radiated to and received by the ballast for the purpose of controlling the ballast and putting the ballast in standby mode.

2. Active Mode Procedure

2.1. Where ANSI C82.2 (incorporated by reference; see § 430.3) references ANSI C82.1–1997, the operator shall use ANSI C82.1 (incorporated by reference; see § 430.3) for testing low-frequency ballasts and shall use ANSI C82.11 (incorporated by reference; see § 430.3) for testing high-frequency ballasts. In addition when applying ANSI C82.2, ANSI C78.81 (incorporated by reference; see § 430.3), ANSI C82.1, ANSI C82.11, and ANSI C82.13 (incorporated by reference; see § 430.3) shall be used instead of the versions listed as normative references in ANSI C82.2.

2.2. Instruments

2.2.1. All instruments shall be as specified by ANSI C82.2 (incorporated by reference; see § 430.3).

2.2.2. *Power Analyzer*. In addition to the specifications in ANSI C82.2 (incorporated by reference; see § 430.3), the power analyzer shall have a maximum 100 pF capacitance to ground and frequency response between 40 Hz and 1 MHz.

2.2.3. *Current Probe*. In addition to the specifications in ANSI C82.2 (incorporated by reference; see § 430.3), the current probe shall be galvanically isolated and have frequency response between 40 Hz and 20 MHz.

2.3. Test Setup

2.3.1. The ballast shall be connected to a main power source and to the fluorescent lamp load according to the manufacturer's wiring instructions and ANSI C82.1 (incorporated by reference; see § 430.3) and ANSI C78.81 (incorporated by reference; see § 430.3).

2.3.1.1.1. Wire lengths between the ballast and fluorescent lamp shall be the length provided by the ballast manufacturer. Wires shall be kept loose and not shortened or bundled.

2.3.1.1.1.1. If the wire lengths supplied with the ballast are of insufficient length to reach both ends of lamp, additional wire may be added. The minimal additional wire length necessary shall be added, and the additional wire shall be the same wire gauge as the wire supplied with the ballast. If no wiring is provided with the ballast, 18 gauge or thicker wire shall be used. The wires shall be separated from each other and ground to prevent parasitic capacitance for all wires used in the apparatus, including those wires from the ballast to the lamps and from the lamps to the measuring devices.

2.3.1.1.2. The fluorescent lamp shall meet the specifications of a reference lamp as defined by ANSI C82.13 (incorporated by reference; see § 430.3) and be seasoned at least 12 hours.

2.3.1.2. The ballast shall be connected to the number of lamps equal to the maximum number of lamps the ballast is designed to operate.

2.3.1.3. The ballast shall be tested with a reference lamp of the nominal wattage listed in Table A of this section.

2.3.1.4. For ballasts that operate rapid-start lamps (commonly referred to as 8-foot high output lamps) with recessed double contact bases, a nominal overall length of 96 inches, and that operate at ambient temperatures of 20 °F or less and are used in outdoor signs (sign ballasts):

2.3.1.4.1. A T8 lamp in accordance with Table A of this section shall be used for sign ballasts that only operate T8 lamps.

2.3.1.4.2. A T12 lamp in accordance with Table A of this section shall be used for sign ballasts that only operate T12 lamps.

2.3.1.4.3. A T12 lamp in accordance with Table A of this section shall be used for sign ballasts that are capable of operating both T8 and T12 lamps.

TABLE A—LAMP-AND-BALLAST PAIRINGS AND FREQUENCY ADJUSTMENT FACTORS

Ballast type	Nominal lamp wattage	Lamp diameter and base	Frequency adjustment factor (β)	
			Low-frequency	High-frequency
Ballasts that operate straight-shaped lamps (commonly referred to as 4-foot medium bipin lamps) with medium bipin bases and a nominal overall length of 48 inches.	32	T8 MBP	0.94	1.0
	34	T12 MBP	0.93	1.0
Ballasts that operate U-shaped lamps (commonly referred to as 2-foot U-shaped lamps) with medium bipin bases and a nominal overall length between 22 and 25 inches.	32	T8 MBP	0.94	1.0
	34	T12 MBP	0.93	1.0
Ballasts that operate rapid-start lamps (commonly referred to as 8-foot-high output lamps) with recessed double contact bases and a nominal overall length of 96 inches.	86	T8 HO RDC	0.92	1.0
	95	T12 HO RDC	0.94	1.0
Ballasts that operate instant-start lamps (commonly referred to as 8-foot slimline lamps) with single pin bases and a nominal overall length of 96 inches.	59	T8 slimline SP	0.95	1.0
	60	T12 slimline SP	0.94	1.0
Ballasts that operate straight-shaped lamps (commonly referred to as 4-foot miniature bipin standard output lamps) with miniature bipin bases and a nominal length between 45 and 48 inches.	28	T5 SO Mini-BP	0.95	1.0
Ballasts that operate straight-shaped lamps (commonly referred to as 4-foot miniature bipin high output lamps) with miniature bipin bases and a nominal length between 45 and 48 inches.	54	T5 HO Mini-BP	0.95	1.0
Ballasts that operate rapid-start lamps (commonly referred to as 8-foot high output lamps) with recessed double contact bases, a nominal overall length of 96 inches, and that operate at ambient temperatures of 20 °F or less and are used in outdoor signs.	86	T8 HO RDC	0.92	1.0
	110	T12 HO RDC	0.94	1.0

MBP, Mini-BP, RDC, and SP represent medium bipin, miniature bipin, recessed double contact, and single pin, respectively.

2.3.2. Power Analyzer

2.3.2.1. The power analyzer shall have n+1 channels where n is the number of lamps a ballast operates.

2.3.2.2. *Lamp Arc Voltage*. Leads from the power analyzer should attach to each fluorescent lamp according to Figure 1 of this section for rapid- and programmed-start ballasts, Figure 2 of this section for instant-start ballasts operating single pin (SP) lamps, and Figure 3 of this section for instant-start ballasts operating medium bipin (MBP), miniature bipin (mini-BP), or recessed double contact (RDC) lamps. The programmed- and rapid-start ballast test setup includes two 1000 ohm resistors placed in parallel with the lamp pins to create a midpoint from which to measure lamp arc voltage.

2.3.2.3. *Lamp Arc Current*. A current probe shall be positioned on each fluorescent lamp according to Figure 1 for rapid- and programmed-start ballasts, Figure 2 of this section for instant-start ballasts operating SP lamps, and Figure 3 of this section for instant-start ballasts operating MBP, mini-BP, and RDC lamps.

2.3.2.3.1. For the lamp arc current measurement, the full transducer ratio shall be set in the power analyzer to match the current probe to the power analyzer.

$$\text{Full Transducer Ratio} = \frac{I_{in}}{V_{out}} \times \frac{R_{in}}{R_{in} + R_s}$$

Where:

I_{in} Current through the current transducer

V_{out} Voltage out of the transducer

R_{in} Power analyzer impedance

R_s Current probe output impedance

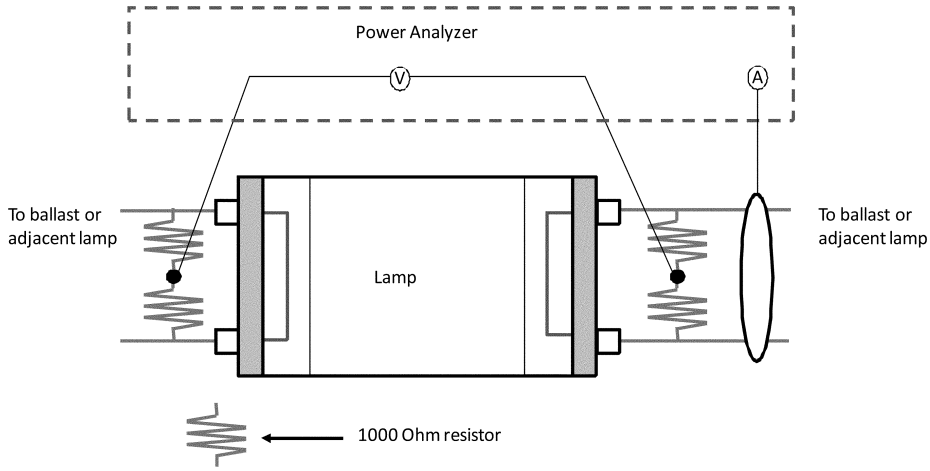

Figure 1: Programmed- and Rapid-Start Ballast Instrumentation Setup

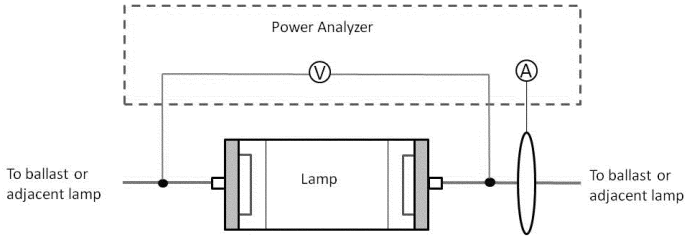

Figure 2: Instant-Start Ballasts that Operate SP Lamps Instrumentation Setup

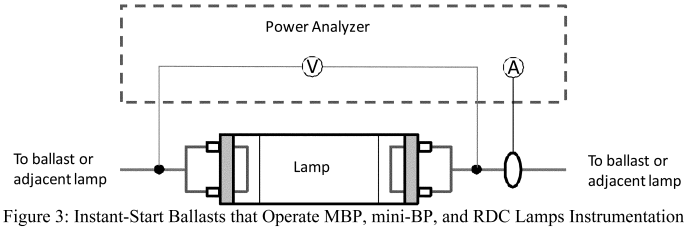

Figure 3: Instant-Start Ballasts that Operate MBP, mini-BP, and RDC Lamps Instrumentation Setup

2.4. Test Conditions

2.4.1. The test conditions for testing fluorescent lamp ballasts shall be done in accordance with ANSI C82.2 (incorporated by reference; see §430.3). DOE further specifies that the following revisions of the normative references indicated in ANSI C82.2 should be used in place of the references directly specified in ANSI C82.2: ANSI C78.81 (incorporated by reference; see §430.3), ANSI C82.1 (incorporated by reference; see §430.3), ANSI C82.3 (incorporated by reference; see §430.3), ANSI C82.11 (incorporated by reference; see §430.3), and ANSI C82.13 (incorporated by reference; see §430.3). All other normative references shall be as specified in ANSI C82.2.

2.4.2. *Room Temperature and Air Circulation*. The test facility shall be held at 25 ±2 °C, with minimal air movement as defined in ANSI C78.375 (incorporated by reference; see §430.3).

2.4.3. *Input Voltage*. The directions in ANSI C82.2 (incorporated by reference; see §430.3)

section 4.1 should be ignored with the following directions for input voltage used instead. For commercial ballasts capable of operating at multiple voltages, the ballast shall be tested 277V ±0.1%. For ballasts designed and labeled for residential applications and capable of operating at multiple voltages, the ballast shall be tested at 120V ±0.1%. For ballasts designed and labeled as cold-temperature outdoor sign ballasts and capable of operating at multiple voltages, the ballast shall be tested at 120V ±0.1%. Ballasts capable of operating at only one input voltage shall be tested at that specified voltage.

2.5. Test Method

2.5.1. *Ballast Luminous Efficiency*.

2.5.1.1. The ballast shall be connected to the appropriate fluorescent lamps and to measurement instrumentation as indicated by the Test Setup in section 2.3.

2.5.1.2. The ballast shall be operated at full output for at least 15 minutes but no longer than 1 hour until stable operating conditions are reached. After this condition is reached, concurrently measure the parameters described in sections 2.5.1.3 through 2.5.1.9.

2.5.1.2.1. Stable operating conditions are determined by measuring lamp arc voltage, current, and power once per second in accordance with the setup described in section 2.3. Once the difference between the maximum and minimum values for lamp arc voltage, current, and power do not exceed one percent over a four minute moving window, the system shall be considered stable.

2.5.1.3. *Lamp Arc Voltage*. Measure lamp arc voltage (volts) using the setup described in section 2.3.2.2.

2.5.1.4. *Lamp Arc Current*. Measure lamp arc current (amps) using the setup described in section 2.3.2.3.

2.5.1.5. *Lamp Arc Power*. The power analyzer shall calculate output power by using the measurements described in sections 2.5.1.3 and 2.5.1.4.

2.5.1.6. *Input Power*. Measure the input power (watts) to the ballast in accordance with ANSI C82.2 (incorporated by reference; see §430.3), section 7.

2.5.1.7. *Input Voltage*. Measure the input voltage (volts) (RMS) to the ballast in accordance with ANSI C82.2 (incorporated by reference; see §430.3), section 3.2.1 and section 4.

2.5.1.8. *Input Current*. Measure the input current (amps) (RMS) to the ballast in accordance with ANSI C82.2 (incorporated by reference; see §430.3), section 3.2.1 and section 4.

2.5.1.9. *Lamp Operating Frequency*. Measure the frequency of the waveform delivered from the ballast to any lamp in accordance with the setup in section 2.3.

2.6. Calculations

2.6.1. Calculate ballast luminous efficiency (BLE).

$$\text{Ballast Luminous Efficiency} = \frac{\text{Total Test Ballast Lamp Arc Power}}{\text{Ballast Input Power}} * \beta$$

Where: Total Lamp Arc Power is the sum of the lamp arc powers for all lamps operated by the ballast as determined by section 2.5.1.5, ballast input power is as determined by section 2.5.1.6, and β is equal to the frequency adjustment factor in Table A.

2.6.2. Calculate Power Factor (PF).

$$\text{Power Factor} = \frac{\text{Ballast Input Power} \times \text{Input Voltage}}{\text{Input Current}}$$

Where: Ballast input power is determined in accordance with section 2.5.1.6, input voltage is determined in accordance with section 2.5.1.7, and input current in determined in accordance with section 2.5.1.8.

3. STANDBY MODE PROCEDURE

3.1. The measurement of standby mode power need not be performed to determine compliance with energy conservation standards for fluorescent lamp ballasts at this time. The above statement will be removed as part of a rulemaking to amend the energy conservation standards for fluorescent lamp ballasts to account for standby mode energy consumption, and the following shall apply on the compliance date for such requirements.

3.2. Test Conditions

3.2.1. The test conditions for testing fluorescent lamp ballasts shall be done in accordance with the American National Standard Institute ANSI C82.2 (incorporated by reference; see §430.3). Any subsequent amendment to this standard by the standard-setting organization will not affect the DOE test procedures unless and until amended by DOE. The test conditions for measuring standby power are described in sections 5, 7, and 8 of ANSI C82.2. Fluorescent lamp ballasts that are capable of connections to control devices shall be tested with all commercially available compatible control devices connected in all possible configurations. For each configuration, a separate measurement of standby power shall be made in accordance with section 3.3 of the test procedure.

3.3. Test Method and Measurements

3.3.1. The test for measuring standby mode energy consumption of fluorescent lamp ballasts shall be done in accordance with ANSI C82.2 (incorporated by reference; see §430.3).

3.3.2. Send a signal to the ballast instructing it to have zero light output using the appropriate ballast communication protocol or system for the ballast being tested.

3.3.3. *Input Power*. Measure the input power (watts) to the ballast in accordance with ANSI C82.2, section 13, (incorporated by reference; see §430.3).

3.3.4. *Control Signal Power*. The power from the control signal path will be measured using all applicable methods described below.

3.3.4.1. *AC Control Signal*. Measure the AC control signal power (watts), using a wattmeter (W), connected to the ballast in accordance with the circuit shown in Figure 4 of this section.

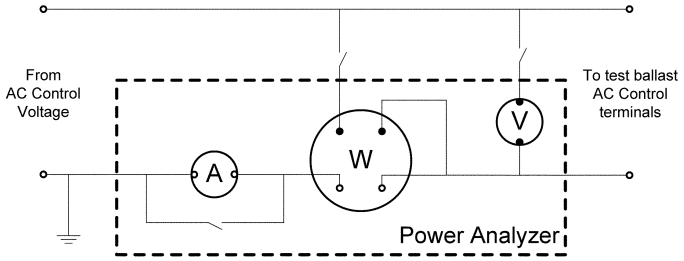

Figure 4: Circuit for Measuring AC Control Signal Power in Standby Mode

3.3.4.2. *DC Control Signal*. Measure the DC control signal voltage, using a voltmeter (V), and current, using an ammeter (A), connected to the ballast in accordance with the circuit shown in Figure 5 of this section. The DC control signal power is calculated by multiplying the DC control signal voltage and the DC control signal current.

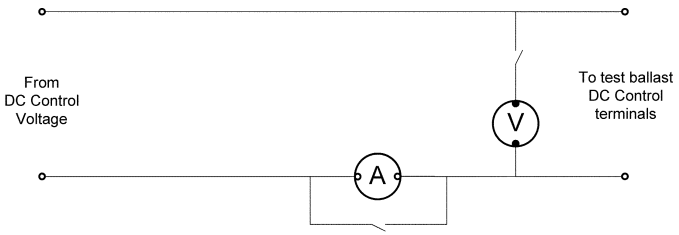

Figure 5: Circuit for Measuring DC Control Signal Power in Standby Mode

3.3.4.3. *Power Line Carrier (PLC) Control Signal.* Measure the PLC control signal power (watts), using a wattmeter (W), connected to the ballast in accordance with the circuit shown in Figure 6 of this section. The wattmeter must have a frequency response that is at least 10 times higher than the PLC being measured in order to measure the PLC signal correctly. The wattmeter must also be high-pass filtered to filter out power at 60 Hertz.

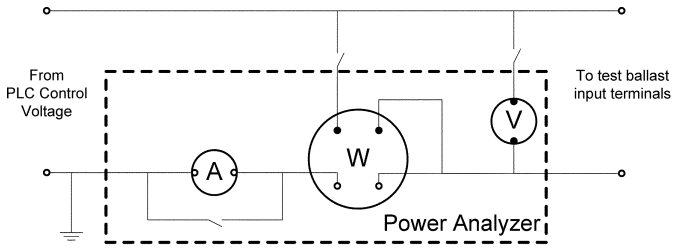

Figure 6: Circuit for Measuring PLC Control Signal Power in Standby Mode

3.3.4.4. *Wireless Control Signal.* The power supplied to a ballast using a wireless signal is not easily measured, but is estimated to be well below 1.0 watt. Therefore, the wireless control signal power is not measured as part of this test procedure.

[76 FR 25224, May 4, 2011, as amended at 76 FR 70628, Nov. 14, 2011; 77 FR 4217, Jan. 27, 2012]

APPENDIX R TO SUBPART B OF PART 430—UNIFORM TEST METHOD FOR MEASURING AVERAGE LAMP EFFICACY (LE), COLOR RENDERING INDEX (CRI), AND CORRELATED COLOR TEMPERATURE (CCT) OF ELECTRIC LAMPS

1. *Scope:* This appendix applies to the measurement of lamp lumens, electrical characteristics, CRI, and CCT for general service fluorescent lamps, and to the measurement of lamp lumens, electrical characteristics for general service incandescent lamps and incandescent reflector lamps.

2. *Definitions*

2.1 To the extent that definitions in the referenced IESNA and CIE standards do not conflict with the DOE definitions, the definitions specified in section 3.0 of IES LM–9 (incorporated by reference; see §430.3), section 3.0 of IESNA LM–20 (incorporated by reference; see §430.3), section 3.0 and the Glossary of IES LM–45 (incorporated by reference; see §430.3), section 2 of IESNA LM–58 (incorporated by reference; see §430.3), and Appendix 1 of CIE 13.3 (incorporated by reference; see §430.3) shall be included.

2.2 *ANSI Standard* means a standard developed by a committee accredited by the American National Standards Institute (ANSI).

2.3 *CIE* means the International Commission on Illumination.

2.4 *CRI* means Color Rendering Index as defined in §430.2.

2.5 *IESNA* means the Illuminating Engineering Society of North America.

2.6 *Lamp efficacy* means the ratio of measured lamp lumen output in lumens to the measured lamp electrical power input in watts, rounded to the nearest tenth, in units of lumens per watt.

2.7 *Lamp lumen output* means the total luminous flux produced by the lamp, at the reference condition, in units of lumens.

2.8 *Lamp electrical power input* means the total electrical power input to the lamp, including both arc and cathode power where appropriate, at the reference condition, in units of watts.

2.9 *Reference condition* means the test condition specified in IES LM–9 for general service fluorescent lamps, in IESNA LM–20 for incandescent reflector lamps, and in IES LM–45 for general service incandescent lamps.

3. Test Conditions

3.1 *General Service Fluorescent Lamps:* For general service fluorescent lamps, the ambient conditions of the test and the electrical circuits, reference ballasts, stabilization requirements, instruments, detectors, and photometric test procedure and test report shall be as described in the relevant sections of IES LM–9 (incorporated by reference; see §430.3).

3.2 *General Service Incandescent Lamps:* For general service incandescent lamps, the selection and seasoning (initial burn-in) of the

test lamps, the equipment and instrumentation, and the test conditions shall be as described in IES LM–45 (incorporated by reference; see § 430.3).

3.3 *Incandescent Reflector Lamps:* For incandescent reflector lamps, the selection and seasoning (initial burn-in) of the test lamps, the equipment and instrumentation, and the test conditions shall conform to sections 4.2 and 5.0 of IESNA LM–20 (incorporated by reference; see § 430.3).

4. Test Methods and Measurements

All lumen measurements made with instruments calibrated to the devalued NIST lumen after January 1, 1996, shall be multiplied by 1.011.

4.1 *General Service Fluorescent Lamps*

4.1.1 The measurement procedure shall be as described in IES LM–9 (incorporated by reference; see § 430.3), except that lamps shall be operated at the appropriate voltage and current conditions as described in ANSI C78.375 (incorporated by reference; see § 430.3) and in ANSI C78.81 (incorporated by reference; see § 430.3) or ANSI C78.901 (incorporated by reference; see § 430.3), and lamps shall be operated using the appropriate reference ballast at input voltage specified by the reference circuit as described in ANSI C82.3 (incorporated by reference; see § 430.3). If, for a lamp, both low-frequency and high-frequency reference ballast settings are included in ANSI C78.81 or ANSI C78.901, the lamp shall be operated using the low-frequency reference ballast.

4.1.2 For lamps not listed in ANSI C78.81 (incorporated by reference; see § 430.3) nor in ANSI C78.901 (incorporated by reference; see § 430.3), the lamp shall be operated using the following reference ballast settings:

4.1.2.1 4-Foot medium bi-pin lamps shall be operated using the following reference ballast settings: T10 or T12 lamps are to use 236 volts, 0.43 amps, and 439 ohms; T8 lamps are to use 300 volts, 0.265 amps, and 910 ohms.

4.1.2.2 2-Foot U-shaped lamps shall be operated using the following reference ballast settings: T12 lamps are to use 236 volts, 0.430 amps, and 439 ohms; T8 lamps are to use 300 volts, 0.265 amps, and 910 ohms.

4.1.2.3 8-foot slimline lamps shall be operated using the following reference ballast settings:

(a) *T12 lamps:* 625 volts, 0.425 amps, and 1280 ohms.

(b) *T8 lamps:* 625 volts, 0.260 amps, and 1960 ohms.

4.1.2.4 8-foot high output lamps shall be operated using the following reference ballast settings:

(a) *T12 lamps:* 400 volts, 0.800 amps, and 415 ohms.

(b) *T8 lamps:* 450 volts, 0.395 amps, and 595 ohms.

4.1.2.5 4-foot miniature bipin standard output or high output lamps shall be operated using the following reference ballast settings:

(a) *Standard Output:* 329 volts, 0.170 amps, and 950 ohms.

(b) *High Output:* 235 volts, 0.460 amps, and 255 ohms.

4.1.3 Lamp lumen output (lumens) and lamp electrical power input (watts), at the reference condition, shall be measured and recorded. Lamp efficacy shall be determined by computing the ratio of the measured lamp lumen output and lamp electrical power input at equilibrium for the reference condition.

4.2 *General Service Incandescent Lamps*

4.2.1 The measurement procedure shall be as described in IES LM–45 (incorporated by reference; see § 430.3). Lamps shall be operated at the rated voltage as defined in § 430.2.

4.2.2 The test procedure shall conform to sections 6 and 7 of IES LM–45, and the lumen output of the lamp shall be determined in accordance with section 7 of IES LM–45. Lamp electrical power input in watts shall be measured and recorded. Lamp efficacy shall be determined by computing the ratio of the measured lamp lumen output and lamp electrical power input at equilibrium for the reference condition. The test report shall conform to section 8 of IES LM–45.

4.2.3 The measurement procedure for testing the lifetime of general service incandescent lamps shall be as described in IESNA LM–49 (incorporated by reference; see § 430.3). The lifetime measurement shall be taken by measuring the operating time of a lamp, expressed in hours, not including any off time. The percentage of the sample size that meets the minimum rated lifetime shall be recorded. The lamp shall be deemed to meet minimum rated lifetime standards if greater than 50 percent of the sample size specified in § 429.27 meets the minimum rated lifetime.

4.2.3.1 Accelerated lifetime testing is not allowed. The second paragraph of section 6.1 of IESNA LM–49 is to be disregarded.

4.3 *Incandescent Reflector Lamps*

4.3.1 The measurement procedure shall be as described in IESNA LM–20 (see 10 CFR 430.22). Lamps shall be operated at the rated voltage as defined in § 430.2.

4.3.2. Lamp lumen output shall be determined as total forward lumens, and may be measured in an integrating sphere at the reference condition in accordance with § 7.2 of IESNA LM–20 (incorporated by reference; see § 430.3) or from an average intensity distribution curve measured at the reference condition specified in § 6.0 of IESNA LM–20. Lamp electrical power input in watts shall be measured and recorded.

4.3.3 Lamp efficacy shall be determined by computing the ratio of the measured lamp lumen output and lamp electrical power

input at equilibrium for the reference condition. The test report shall conform to section 10.0 of IES LM–20 (incorporated by reference; see § 430.3).

4.4 Determination of Color Rendering Index and Correlated Color Temperature

4.4.1 The CRI shall be determined in accordance with the method specified in CIE 13.3 (incorporated by reference; see § 430.3) for general service fluorescent lamps. The CCT shall be determined in accordance with the method specified in IES LM–9 (incorporated by reference; see § 430.3) and rounded to the nearest 10 kelvin for general service fluorescent lamps. The CCT shall be determined in accordance with the CIE 15 (incorporated by reference; see § 430.3) for incandescent lamps. The required spectroradiometric measurement and characterization shall be conducted in accordance with the methods set forth in IESNA LM–58 (incorporated by reference; see § 430.3).

4.4.2 The test report shall include a description of the test conditions, equipment, measured lamps, spectroradiometric measurement results, and CRI and CCT determinations.

[62 FR 29240, May 29, 1997, as amended at 74 FR 34177, July 14, 2009; 77 FR 4217, Jan. 27, 2012]

APPENDIX S TO SUBPART B OF PART 430—UNIFORM TEST METHOD FOR MEASURING THE WATER CONSUMPTION OF FAUCETS AND SHOWERHEADS

NOTE: After April 21, 2014, any representations made with respect to the water consumption of showerheads or faucets must be made in accordance with the results of testing pursuant to this appendix.

Manufacturers conducting tests of showerheads or faucets November 22, 2013 and prior to April 21, 2014, must conduct such test in accordance with either this appendix or appendix S as it appeared at 10 CFR part 430, subpart B, appendix S, in the 10 CFR parts 200 to 499 edition revised as of January 1, 2013. Any representations made with respect to the water consumption of such showerheads or faucets must be in accordance with whichever version is selected. Given that after April 21, 2014 representations with respect to the water consumption of showerheads and faucets must be made in accordance with tests conducted pursuant to this appendix, manufacturers may wish to begin using this test procedure as soon as possible.

1. *Scope:* This appendix covers the test requirements used to measure the hydraulic performance of faucets and showerheads.

2. Flow Capacity Requirements

a. Faucets—The test procedures to measure the water flow rate for faucets, expressed in gallons per minute (gpm) and liters per minute (L/min), or gallons per cycle (gal/cycle) and liters per cycle (L/cycle), shall be conducted in accordance with the test requirements specified in section 5.4, Flow Rate, of ASME A112.18.1–2012 (incorporated by reference, *see* § 430.3). Measurements shall be recorded at the resolution of the test instrumentation. Calculations shall be rounded off to the same number of significant digits as the previous step. The final water consumption value shall be rounded to one decimal place for non-metered faucets, or two decimal places for metered faucets.

b. Showerheads—The test procedures to measure the water flow rate for showerheads, expressed in gallons per minute (gpm) and liters per minute (L/min), shall be conducted in accordance with the test requirements specified in section 5.4, Flow Rate, of the ASME A112.18.1–2012 (incorporated by reference, *see* § 430.3). Measurements shall be recorded at the resolution of the test instrumentation. Calculations shall be rounded off to the same number of significant digits as the previous step. The final water consumption value shall be rounded to one decimal place. If the time/volume method of section 5.4.2.2(d) is used, the container must be positioned as to collect all water flowing from the showerhead, including any leakage from the ball joint.

[63 FR 13316, Mar. 18, 1998, as amended at 78 FR 62986, Oct. 23, 2013]

APPENDIX T TO SUBPART B OF PART 430—UNIFORM TEST METHOD FOR MEASURING THE WATER CONSUMPTION OF WATER CLOSETS AND URINALS

NOTE: After April 21, 2014, any representations made with respect to the water consumption of water closets or urinals must be made in accordance with the results of testing pursuant to this appendix.

Manufacturers conducting tests of water closets or urinals after November 22, 2013 and prior to April 21, 2014, must conduct such test in accordance with either this appendix or appendix T as it appeared at 10 CFR part 430, subpart B, appendix S, in the 10 CFR parts 200 to 499 edition revised as of January 1, 2013. Any representations made with respect to the water consumption of such water closets or urinals must be in accordance with whichever version is selected. Given that after April 21, 2014 representations with respect to the water consumption of water closets and urinals must be made in accordance with tests conducted pursuant to this appendix, manufacturers may wish to

begin using this test procedure as soon as possible.

1. *Scope:* This appendix covers the test requirements used to measure the hydraulic performances of water closets and urinals.

2. Test Apparatus and General Instructions

a. The test apparatus and instructions for testing water closets shall conform to the requirements specified in section 7.1, General, subsections 7.1.1, 7.1.2, 7.1.3, 7.1.4, and 7.1.5 of ASME A112.19.2–2008 (incorporated by reference, *see* §430.3). The flushometer valve used in the water consumption test shall represent the maximum design flush volume of the water closet. Measurements shall be recorded at the resolution of the test instrumentation. Calculations of water consumption for each tested unit shall be rounded off to the same number of significant digits as the previous step.

b. The test apparatus and instructions for testing urinals shall conform to the requirements specified in section 8.2, Test Apparatus and General Instructions, subsections 8.2.1, 8.2.2, and 8.2.3 of ASME A112.19.2–2008 (incorporated by reference, *see* §430.3). The flushometer valve used in the water consumption test shall represent the maximum design flush volume of the urinal. Measurements shall be recorded at the resolution of the test instrumentation. Calculations of water consumption for each tested unit shall be rounded off to the same number of significant digits as the previous step.

3. Test Measurement

a. Water closets:

(i) The measurement of the water flush volume for water closets, expressed in gallons per flush (gpf) and liters per flush (Lpf), shall be conducted in accordance with the test requirements specified in section 7.4, Water Consumption Test, of ASME A112.19.2–2008 (incorporated by reference, *see* §430.3). For dual-flush water closets, the measurement of the water flush volume shall be conducted separately for the full-flush and reduced-flush modes and in accordance with the test requirements specified section 7.4, Water Consumption Test, of ASME A112.19.2–2008.

(ii) Static pressure requirements: The water consumption tests of siphonic and blowout water closets shall be conducted at two static pressures. For flushometer valve water closets with a siphonic bowl, the test pressures shall be 80 psi and 35 psi. For flushometer valve water closets with a blowout bowl, the test pressures shall be 80 psi and 45 psi. The test shall be run three times at each pressure as specified in section 7.4.3 ''Procedure,'' of ASME A112.19.2–2008 (incorporated by reference, *see* §430.3). The final measured flush volume for each tested unit shall be the average of the total flush volumes recorded at each test pressure as specified in section 7.4.5 ''Performance,'' of ASME A112.19.2–2008.

(iii) Flush volume and tank trim component adjustments: For gravity flush tank water closets, trim components that can be adjusted to cause an increase in flush volume, including (but not limited to) the flapper valve, fill valve, and tank water level, shall be set in accordance with the printed installation instructions supplied by the manufacturer. If the installation instructions for the model to be tested do not specify trim setting adjustments, these trim components shall be adjusted to the maximum water use setting so that the maximum flush volume is produced without causing the water closet to malfunction or leak. The water level in the tank shall be set to the maximum water line designated in the printed installation instructions supplied by the manufacturer or the designated water line on the tank itself, whichever is higher. If the printed installation instructions or the water closet tank do not indicate a water level, the water level shall be adjusted to 1±0.1 inches below the top of the overflow tube or 1± 0.1 inches below the top rim of the water-containing vessel (for gravity flush tank water closets that do not contain an overflow tube) for each designated pressure specified in Table 5 of ASME A112.19.2–2008 (incorporated by reference, *see* §430.3).

b. Urinals—The measurement of water flush volume for urinals, expressed in gallons per flush (gpf) and liters per flush (Lpf), shall be conducted in accordance with the test requirements specified in section 8.6, Water Consumption Test, of ASME A112.19.2–2008 (incorporated by reference, *see* §430.3). The final measured flush volume for each tested unit shall be the average of the total flush volumes recorded at each test pressure as specified in section 8.6.4 ''Performance,'' of ASME A112.19.2–2008.

[63 FR 13317, Mar. 18, 1998, as amended at 78 FR 62987, Oct. 23, 2013]

APPENDIX U TO SUBPART B OF PART 430—UNIFORM TEST METHOD FOR MEASURING THE ENERGY CONSUMPTION OF CEILING FANS

1. *Scope*. This appendix covers the test requirements used to measure the energy performance of ceiling fans.

2. *Definitions:*

a. *Airflow* means the rate of air movement at a specific fan-speed setting expressed in cubic feet per minute (CFM).

b. *Airflow efficiency* means the ratio of airflow divided by power at a specific ceiling fan-speed setting expressed in CFM per watt (CFM/watt).

3. *Test Apparatus and General Instructions:* The test apparatus and instructions for testing ceiling fans shall conform to the requirements specified in Chapter 3, ''Air-Delivery Room Construction and Preparation,'' Chapter 4, ''Equipment Set-up and Test Procedure,'' and Chapter 6, ''Definitions and Acronyms,'' of the EPA's ''ENERGY STAR Testing Facility Guidance Manual: Building a Testing Facility and Performing the Solid State Test Method for ENERGY STAR Qualified Ceiling Fans,'' Version 1.1, December 9, 2002 (Incorporated by reference, see §430.22). Record measurements at the resolution of the test instrumentation. Round off calculations to the same number of significant digits as the previous step. Round the final energy consumption value to the nearest whole number as follows:

(i) A fractional number at or above the midpoint between the two consecutive whole numbers shall be rounded up to the higher of the two whole numbers; or

(ii) A fractional number below the midpoint between the two consecutive whole numbers shall be rounded down to the lower of the two whole numbers.

4. *Test Measurement:* Measure the airflow and airflow efficiency for ceiling fans, expressed in cubic feet per minute (CFM) and CFM per watt (CFM/watt), in accordance with the test requirements specified in Chapter 4, ''Equipment Setup and Test Procedure,'' of the EPA's ''ENERGY STAR Testing Facility Guidance Manual: Building a Testing Facility and Performing the Solid State Test Method for ENERGY STAR Qualified Ceiling Fans,'' Version 1.1, December 9, 2002 (Incorporated by reference, see §430.22). In performing the airflow test, measure ceiling fan power using a RMS sensor capable of measuring power with an accuracy of ±1 %. Prior to using the sensor and sensor software it has selected, the test laboratory shall verify performance of the sensor and sensor software. Measure power input at a point that includes all power consuming components of the ceiling fan (but without any attached light kit energized). Measure power at the rated voltage that represents normal operation continuously over the time period for which the airflow test is conducted, and report the average value of the power measurement in watts (W). Use the average value of power input to calculate the airflow efficiency in CFM/W.

[71 FR 71366, Dec. 8, 2006]

APPENDIX V TO SUBPART B OF PART 430—UNIFORM TEST METHOD FOR MEASURING THE ENERGY CONSUMPTION OF CEILING FAN LIGHT KITS

1. *Scope:* This appendix covers the test requirements used to measure the energy performance of ceiling fan light kits.

2. *Definitions:*

a. *Input power* means the actual total power used by all lamp(s) and ballast(s) of the light kit during operation, expressed in watts (W) and measured using the lamp and ballast packaged with the kit.

b. *Lamp ballast platform* means a pairing of one ballast with one or more lamps that can operate simultaneously on that ballast. A unique platform is defined by the manufacturer and model number of the ballast and lamp(s) and the quantity of lamps that operate on the ballast.

c. *Lamp lumens* means a measurement of luminous flux expressed in lumens and measured using the lamp and ballast shipped with the fixture.

d. *System efficacy per lamp ballast platform* means the ratio of measured lamp lumens expressed in lumens and measured input power expressed in watts (W).

3. *Test Apparatus and General Instructions:*

(a) The test apparatus and instruction for testing screw base lamps packaged with ceiling fan light kits that have medium screw base sockets shall conform to the requirements specified in section 2, ''Definitions,'' section 3, ''Referenced Standards,'' and section 4, ''CFL Requirements for Testing'' of DOE's ''ENERGY STAR Program Requirements for [Compact Fluorescent Lamps] CFLs,'' Version 3.0, (Incorporated by reference, see §430.22). Record measurements at the resolution of the test instrumentation. Round off calculations to the same number of significant digits as the previous step. Round off the final energy consumption value to a whole number as follows:

(i) A fractional number at or above the midpoint between the two consecutive whole numbers shall be rounded up to the higher of the two whole numbers; or

(ii) A fractional number below the midpoint between the two consecutive whole numbers shall be rounded down to the lower of the two whole numbers.

(b) The test apparatus and instruction for testing pin-based fluorescent lamps packaged with ceiling fan light kits that have pin-based sockets shall conform to the requirements specified in section 1, ''Definitions,'' and section 3, ''Energy Efficiency Specifications for Qualifying Products'' of the EPA's ''ENERGY STAR Program Requirements for Residential Light Fixtures,'' Version 4.0, (Incorporated by reference, see §430.22). Record measurements at the resolution of the test instrumentation. Round off calculations to the same number of significant digits as the previous step. The final energy consumption value shall be rounded to a whole number as follows:

(i) A fractional number at or above the midpoint between the two consecutive whole numbers shall be rounded up to the higher of the two whole numbers; or

(ii) A fractional number below the midpoint between the two consecutive whole numbers shall be rounded down to the lower of the two whole numbers.

4. *Test Measurement:*

(a) For screw base compact fluorescent lamps packaged with ceiling fan light kits that have medium screw base sockets, measure the efficacy, expressed in lumens per watt, in accordance with the test requirements specified in section 4, ''CFL Requirements for Testing,'' of the ''ENERGY STAR Program Requirements for Compact Fluorescent Lamps,'' Version 3.0 (Incorporated by reference, see § 430.22).

(b) For pin-based compact fluorescent lamps packaged with ceiling fan light kits that have pin-based sockets, measure the efficacy, expressed in lumens per watt, in accordance with the test requirements specified in section 3, ''Energy-Efficiency Specifications for Qualifying Products'' and Table 3 in section 4, ''Qualification Process, Testing Facilities, Standards, and Documentation,'' of the ''ENERGY STAR Program Requirements for Residential Light Fixtures,'' Version 4.0 (Incorporated by reference, see § 430.22).

[71 FR 71366, Dec. 8, 2006]

APPENDIX W TO SUBPART B OF PART 430—UNIFORM TEST METHOD FOR MEASURING THE ENERGY CONSUMPTION OF MEDIUM BASE COMPACT FLUORESCENT LAMPS

1. *Scope:* This appendix covers the test requirements used to measure the initial efficacy, lumen maintenance at 1,000 hours, lumen maintenance at 40 percent of rated life, rapid cycle stress, and lamp life of medium base compact fluorescent lamps.

2. *Definitions:*

a. *Average rated life* means the length of time declared by the manufacturer at which 50 percent of any large number of units of a lamp reaches the end of their individual lives.

b. *Initial performance values* means the photometric and electrical characteristics of the lamp at the end of 100 hours of operation. Such values include the initial efficacy, the rated luminous flux and the rated lumen output.

c. *Lumen maintenance* means the luminous flux or lumen output at a given time in the life of the lamp and expressed as a percentage of the rated luminous flux or rated lumen output, respectively.

d. *Rated luminous flux or rated lumen output* means the initial lumen rating (100 hour) declared by the manufacturer, which consists of the lumen rating of a lamp at the end of 100 hours of operation.

e. *Rated supply frequency* means the frequency marked on the lamp.

f. *Rated voltage* means the voltage marked on the lamp.

g. *Rated wattage* means the wattage marked on the lamp.

h. *Self-ballasted compact fluorescent lamp* means a compact fluorescent lamp unit that incorporates, permanently enclosed, all elements that are necessary for the starting and stable operation of the lamp, and does not include any replaceable or interchangeable parts.

3. *Test Apparatus and General Instructions:* The test apparatus and instructions for testing medium base compact fluorescent lamps shall conform to the requirements specified in section 2, ''Definitions,'' section 3, ''Referenced Standards,'' and section 4, ''CFL Requirements for Testing,'' of DOE's ''ENERGY STAR Program Requirements for [Compact Fluorescent Lamps] CFLs,'' Version dated August 9, 2001, (commonly referred to as Version 2.0), (Incorporated by reference, see § 430.22). Record measurements at the resolution of the test instrumentation. Round off calculations to the same number of significant digits as the previous step. Round the final energy consumption value, as applicable, to the nearest decimal place or whole number as follows:

(i) A fractional number at or above the midpoint between two consecutive decimal places or whole numbers shall be rounded up to the higher of the two decimal places or whole numbers; or

(ii) A fractional number below the midpoint between two consecutive decimal places or whole numbers shall be rounded down to the lower of the two decimal places or whole numbers. Round the final initial efficacy to one decimal place. Round the final lumen maintenance at 1,000 hours to a whole number. Round the final lumen maintenance at 40 percent of rated life, the final rapid cycle stress, and the final lamp life for medium base compact fluorescent lamps to whole numbers.

4. *Test Measurement:* Measure the initial efficacy expressed in lumens per watt; lumen maintenance at 1,000 hours expressed in lumens; lumen maintenance at 40 percent of rated life expressed in lumens; rapid cycle stress expressed in the number of lamps that meet or exceed the minimum number of cycles; and lamp life expressed in hours in accordance with the test requirements specified in section 4, ''CFL Requirements for Testing'' of DOE's ''ENERGY STAR Program Requirements for [Compact Fluorescent Lamps] CFLs,'' Version dated August 9, 2001 (Incorporated by reference, see § 430.22).

[71 FR 71366, Dec. 8, 2006]

APPENDIX X TO SUBPART B OF PART 430—UNIFORM TEST METHOD FOR MEASURING THE ENERGY CONSUMPTION OF DEHUMIDIFIERS

NOTE: Prior to the compliance date for any amended energy conservation standards that incorporate standby mode and off mode energy consumption, manufacturers may use either Appendix X or Appendix X1 to certify compliance with existing DOE energy conservation standards and to make any representations related to energy consumption of dehumidifiers, with the following exception. If the compliance date is after April 29, 2013, manufacturers that make representations related to standby mode and off mode energy consumption must use Appendix X1 for any representations made after April 29, 2013 of the energy consumption of these products, consistent with the requirements of 42 U.S.C. 6293(c)(2).

After the compliance date for any amended energy conservation standards that incorporate standby mode and off mode energy consumption, all dehumidifiers shall be tested using the provisions of Appendix X1 to certify compliance with amended energy conservation standards and to make any representations related to energy consumption, with the following exception. If the compliance date is before April 29, 2013, manufacturers may use Appendix X for any representations until April 29, 2013 of energy consumption of these products, consistent with the requirements of 42 U.S.C. 6293(c)(2).

1. *Scope:* This appendix covers the test requirements used to measure the energy performance of dehumidifiers.

2. *Definitions:*

a. *Product capacity for dehumidifiers* means a measure of the ability of a dehumidifier to remove moisture from its surrounding atmosphere, measured in pints collected per 24 hours of continuous operation.

b. *Energy factor for dehumidifiers* means a measure of energy efficiency of a dehumidifier calculated by dividing the water removed from the air by the energy consumed, measured in liters per kilowatt hour (L/kWh).

3. *Test Apparatus and General Instructions:* The test apparatus and instructions for testing dehumidifiers shall conform to the requirements specified in section 1, ''Definitions,'' section 2, ''Qualifying Products,'' and section 4, ''Test Criteria,'' of the EPA's ''ENERGY STAR Program Requirements for Dehumidifiers,'' effective January 1, 2001 (Incorporated by reference, see § 430.22). Record measurements at the resolution of the test instrumentation. Round off calculations to the same number of significant digits as the previous step. Round the final minimum energy factor value to two decimal places as follows:

(i) A fractional number at or above the midpoint between two consecutive decimal places shall be rounded up to the higher of the two decimal places; or

(ii) A fractional number below the midpoint between two consecutive decimal places shall be rounded down to the lower of the two decimal places.

4. *Test Measurement:* Measure the energy factor for dehumidifiers, expressed in liters per kilowatt hour (L/kWh) and product capacity in pints per day (pints/day), in accordance with the test requirements specified in section 4, ''Test Criteria,'' of EPA's ''ENERGY STAR Program Requirements for Dehumidifiers,'' effective January 1, 2001 (Incorporated by reference, see § 430.22).

[71 FR 71366, Dec. 8, 2006, as amended at 77 FR 65995, Oct. 31, 2012]

APPENDIX X1 TO SUBPART B OF PART 430–UNIFORM TEST METHOD FOR MEASURING THE ENERGY CONSUMPTION OF DEHUMIDIFIERS

NOTE: Prior to the compliance date for any amended energy conservation standards that incorporate standby mode and off mode energy consumption, manufacturers may use either Appendix X or Appendix X1 to certify compliance with existing DOE energy conservation standards and to make any representations related to energy consumption of dehumidifiers, with the following exception. If the compliance date is after April 29, 2013, manufacturers that make representations related to standby mode and off mode energy consumption must use Appendix X1 for any representations made after April 29, 2013 of the energy consumption of these products, consistent with the requirements of 42 U.S.C. 6293(c)(2).

After the compliance date for any amended energy conservation standards that incorporate standby mode and off mode energy consumption, all dehumidifiers shall be tested using the provisions of Appendix X1 to certify compliance with amended energy conservation standards and to make any representations related to energy consumption, with the following exception. If the compliance date is before April 29, 2013, manufacturers may use Appendix X for any representations until April 29, 2013 of energy consumption of these products, consistent with the requirements of 42 U.S.C. 6293(c)(2).

1. SCOPE

This appendix covers the test requirements used to measure the energy performance of dehumidifiers.

2. DEFINITIONS

2.1 ANSI/AHAM DH–1 means the test standard published by the American National Standards Institute and the Association of Home Appliance Manufacturers, titled ''Dehumidifiers,'' ANSI/AHAM DH–1–2008, (incorporated by reference; see § 430.3).

2.2 *Active mode* means a mode in which a dehumidifier is connected to a mains power source, has been activated, and is performing the main functions of removing moisture from air by drawing moist air over a refrigerated coil using a fan, or circulating air through activation of the fan without activation of the refrigeration system.

2.3 *Combined low-power mode* means the aggregate of available modes other than active mode.

2.4 *Energy factor for dehumidifiers* means a measure of energy efficiency of a dehumidifier calculated by dividing the water removed from the air by the energy consumed, measured in liters per kilowatt-hour (L/kWh).

2.5 *IEC 62301* means the test standard published by the International Electrotechnical Commission, titled ''Household electrical appliances—Measurement of standby power,'' Publication 62301 (Edition 2.0 2011–01) (incorporated by reference; see § 430.3).

2.6 *Inactive mode* means a standby mode that facilitates the activation of active mode by remote switch (including remote control), internal sensor, or timer, or that provides continuous status display.

2.7 *Off mode* means a mode in which the dehumidifier is connected to a mains power source and is not providing any active mode or standby mode function, and where the mode may persist for an indefinite time. An indicator that only shows the user that the dehumidifier is in the off position is included within the classification of an off mode.

2.8 *Off-cycle mode* means a standby mode in which the dehumidifier:

(1) Has cycled off its main function by humidistat or humidity sensor;

(2) Does not have its fan or blower operating; and

(3) Will reactivate the main function according to the humidistat or humidity sensor signal.

2.9 *Product capacity for dehumidifiers* means a measure of the ability of the dehumidifier to remove moisture from its surrounding atmosphere, measured in pints collected per 24 hours of continuous operation.

2.10 *Standby mode* means any modes where the dehumidifier is connected to a mains power source and offers one or more of the following user-oriented or protective functions which may persist for an indefinite time:

(1) To facilitate the activation of other modes (including activation or deactivation of active mode) by remote switch (including remote control), internal sensor, or timer;

(2) Continuous functions, including information or status displays (including clocks) or sensor-based functions. A timer is a continuous clock function (which may or may not be associated with a display) that provides regular scheduled tasks (*e.g.*, switching) and that operates on a continuous basis.

3. TEST APPARATUS AND GENERAL INSTRUCTIONS

3.1 *Active mode*. The test apparatus and instructions for testing dehumidifiers shall conform to the requirements specified in Section 3, ''Definitions,'' Section 4, ''Instrumentation,'' and Section 5, ''Test Procedure,'' of ANSI/AHAM DH–1 (incorporated by reference, see § 430.3). Record measurements at the resolution of the test instrumentation. Round off calculations to the same number of significant digits as the previous step. Round the final minimum energy factor value to two decimal places as follows:

(i) A fractional number at or above the midpoint between two consecutive decimal places shall be rounded up to the higher of the two decimal places; or

(ii) A fractional number below the midpoint between two consecutive decimal places shall be rounded down to the lower of the two decimal places.

3.2 *Standby mode and off mode*.

3.2.1 *Installation requirements*. For the standby mode and off mode testing, the dehumidifier shall be installed in accordance with Section 5, Paragraph 5.2 of IEC 62301 (incorporated by reference, see § 430.3), disregarding the provisions regarding batteries and the determination, classification, and testing of relevant modes.

3.2.2 *Electrical energy supply*.

3.2.2.1 *Electrical supply*. For the standby mode and off mode testing, maintain the electrical supply voltage and frequency indicated in Section 7.1.3, ''Standard Test Voltage,'' of ANSI/AHAM DH–1, (incorporated by reference, see § 430.3). The electrical supply frequency shall be maintained ±1 percent.

3.2.2.2 *Supply voltage waveform*. For the standby mode and off mode testing, maintain the electrical supply voltage waveform indicated in Section 4, Paragraph 4.3.2 of IEC 62301, (incorporated by reference; see § 430.3).

3.2.3 *Standby mode and off mode watt meter*. The watt meter used to measure standby mode and off mode power consumption shall meet the requirements specified in Section 4, Paragraph 4.4 of IEC 62301 (incorporated by reference, see § 430.3).

3.2.4 *Standby mode and off mode ambient temperature*. For standby mode and off mode testing, maintain room ambient air temperature conditions as specified in Section 4, Paragraph 4.2 of IEC 62301 (incorporated by reference; see § 430.3).

4. TEST MEASUREMENT

4.1 *Active mode*. Measure the energy factor for dehumidifiers, expressed in liters per kilowatt hour (L/kWh) and product capacity in pints per day (pints/day), in accordance with the test requirements specified in Section 7, ''Capacity Test and Energy Consumption Test,'' of ANSI/AHAM DH–1 (incorporated by reference, see § 430.3).

4.2 *Standby mode and off mode*. Establish the testing conditions set forth in section 3.2 of this appendix, ensuring that the dehumidifier does not enter active mode during the test. For dehumidifiers that take some time to enter a stable state from a higher power state as discussed in Section 5, Paragraph 5.1, Note 1 of IEC 62301, (incorporated by reference; see § 430.3), allow sufficient time for the dehumidifier to reach the lower power state before proceeding with the test measurement. Follow the test procedure specified in Section 5, Paragraph 5.3.2 of IEC 62301 for testing in each possible mode as described in sections 4.2.1 and 4.2.2 of this appendix.

4.2.1 If the dehumidifier has an inactive mode, as defined in section 2.6 of this appendix, but not an off mode, as defined in section 2.7 of this appendix, measure and record the average inactive mode power of the dehumidifier, P_{IA}, in watts. Otherwise, if the dehumidifier has an off mode, as defined in section 2.7 of this appendix, measure and record the average off mode power of the dehumidifier, P_{OM}, in watts.

4.2.2 If the dehumidifier has an off-cycle mode, as defined in section 2.8 of this appendix, measure and record the average off-cycle mode power of the dehumidifier, P_{OC}, in watts.

5. CALCULATION OF DERIVED RESULTS FROM TEST MEASUREMENTS

5.1 *Annual combined low-power mode energy consumption*. Calculate the annual combined low-power mode energy consumption for dehumidifiers, E_{TLP}, expressed in kilowatt-hours per year, according to the following:

$E_{TLP} = [(P_{IO} \times S_{IO}) + (P_{OC} \times S_{OC})] \times K$

Where:

P_{IO} = P_{IA}, dehumidifier inactive mode power, or P_{OM}, dehumidifier off mode power, in watts, as measured in section 4.2.1 of this appendix.

P_{OC} = dehumidifier off-cycle mode power, in watts, as measured in section 4.2.2 of this appendix.

S_{IO} = 1840,5 dehumidifier inactive mode or off mode annual hours.

S_{OC} = 1840,5 dehumidifier off-cycle mode annual hours.

K = 0.001 kWh/Wh conversion factor for watt-hours to kilowatt-hours.

5.2 *Integrated energy factor*. Calculate the integrated energy factor, IEF, expressed in liters per kilowatt-hour, rounded to two decimal places, according to the following:

$IEF = L_W/(E_{active} + ((E_{TLP} \times 24)/S_{active}))$

Where:

L_W = water removed from the air during dehumidifier energy factor test, in liters, as measured in section 4.1 of this appendix.

E_{active} = dehumidifier energy factor test energy consumption, in kilowatt-hours, as measured in section 4.1 of this appendix.

E_{TLP} = standby mode and off mode annual energy consumption, in kilowatt-hours per year, as calculated in section 5.1 of this appendix.

24 = hours per day.

S_{active} = 1,095, dehumidifier active mode annual hours.

[77 FR 65995, Oct. 31, 2012]

APPENDIX Y TO SUBPART B OF PART 430—UNIFORM TEST METHOD FOR MEASURING THE ENERGY CONSUMPTION OF BATTERY CHARGERS

The provisions of this appendix are effective on the compliance date of any energy conservation standard for battery chargers.

1. SCOPE

This appendix covers the test requirements used to measure battery charger energy consumption for battery chargers operating at either DC or United States AC line voltage (115V at 60Hz).

2. DEFINITIONS

The following definitions are for the purposes of explaining the terminology associated with the test method for measuring battery charger energy consumption.[1]

2.1. *Active mode* or *charge mode* is the state in which the battery charger system is connected to the main electricity supply, and the battery charger is delivering current, equalizing the cells, and performing other one-time or limited-time functions in order to bring the battery to a fully charged state.

2.2. *Active power* or *real power* (P) means the average power consumed by a unit. For a two terminal device with current and voltage waveforms i(t) and v(t), which are periodic with period T, the real or active power P is:

$$P = \frac{1}{T}\int_0^T v(t)i(t)dt$$

2.3. *Ambient temperature* is the temperature of the ambient air immediately surrounding the unit under test.

[1] For clarity on any other terminology used in the test method, please refer to IEEE Standard 1515–2000.

2.4. *Apparent power* (S) is the product of root-mean-square (RMS) voltage and RMS current in volt-amperes (VA).

2.5. *Batch charger* is a battery charger that charges two or more identical batteries simultaneously in a series, parallel, series-parallel, or parallel-series configuration. A batch charger does not have separate voltage or current regulation, nor does it have any separate indicators for each battery in the batch. When testing a batch charger, the term ''battery'' is understood to mean, collectively, all the batteries in the batch that are charged together. A charger can be both a batch charger and a multi-port charger or multi-voltage charger.

2.6. *Battery* or *battery pack* is an assembly of one or more rechargeable cells and any integral protective circuitry intended to provide electrical energy to a consumer product, and may be in one of the following forms: (a) Detachable battery (a battery that is contained in a separate enclosure from the consumer product and is intended to be removed or disconnected from the consumer product for recharging); or (b) integral battery (a battery that is contained within the consumer product and is not removed from the consumer product for charging purposes). The word ''intended'' in this context refers to the whether a battery has been designed in such a way as to permit its removal or disconnection from its associated consumer product.

2.7. *Battery energy* is the energy, in watt-hours, delivered by the battery under the specified discharge conditions in the test procedure.

2.8. *Battery maintenance mode* or *maintenance mode* is the mode of operation when the battery charger is connected to the main electricity supply and the battery is fully charged, but is still connected to the charger.

2.9. *Battery rest period* is a period of time between discharge and charge or between charge and discharge, during which the battery is resting in an open-circuit state in ambient air.

2.10. *C-rate* is the rate of charge or discharge, calculated by dividing the charge or discharge current by the rated charge capacity of the battery.

2.11. *Cradle* is an electrical interface between an integral battery product and the rest of the battery charger designed to hold the product between uses.

2.12. *Equalization* is a process whereby a battery is overcharged, beyond what would be considered ''normal'' charge return, so that cells can be balanced, electrolyte mixed, and plate sulfation removed.

2.13. *Instructions* or *manufacturer's instructions* means the documentation packaged with a product in printed or electronic form and any information about the product listed on a Web site maintained by the manufacturer and accessible by the general public at the time of the test. It also includes any information on the packaging or on the product itself. ''Instructions'' also includes any service manuals or data sheets that the manufacturer offers to independent service technicians, whether printed or in electronic form.

2.14. *Measured charge capacity* of a battery is the product of the discharge current in amperes and the time in decimal hours required to reach the specified end-of-discharge voltage.

2.15. *Manual on-off switch* is a switch activated by the user to control power reaching the battery charger. This term does not apply to any mechanical, optical, or electronic switches that automatically disconnect mains power from the battery charger when a battery is removed from a cradle or charging base, or for products with non-detachable batteries that control power to the product itself.

2.16. *Multi-port charger* means a battery charger that charges two or more batteries (which may be identical or different) simultaneously. The batteries are not connected in series or in parallel but with each port having separate voltage and/or current regulation. If the charger has status indicators, each port has its own indicator(s). A charger can be both a batch charger and a multi-port charger if it is capable of charging two or more batches of batteries simultaneously and each batch has separate regulation and/or indicator(s).

2.17. *Multi-voltage charger* is a battery charger that, by design, can charge a variety of batteries (or batches of batteries, if also a batch charger) that are of different rated battery voltages. A multi-voltage charger can also be a multi-port charger if it can charge two or more batteries simultaneously with independent voltage and/or current regulation.

2.18. *Off mode* is the condition, applicable only to units with manual on-off switches, in which the battery charger:

(1) Is connected to the main electricity supply;

(2) Is not connected to the battery; and

(3) All manual on-off switches are turned off.

2.19. *Rated battery voltage* is specified by the manufacturer and typically printed on the label of the battery itself. If there are multiple batteries that are connected in series, the rated battery voltage of the batteries is the total voltage of the series configuration—that is, the rated voltage of each battery multiplied by the number of batteries connected in series. Connecting multiple batteries in parallel does not affect the rated battery voltage.

2.20. *Rated charge capacity* is the capacity claimed by a manufacturer, on a label or in instructions, the battery can store under

specified test conditions, usually given in ampere-hours (Ah) or milliampere-hours (mAh) and typically printed on the label of the battery itself. If there are multiple batteries that are connected in parallel, the rated charge capacity of the batteries is the total charge capacity of the parallel configuration, that is, the rated charge capacity of each battery multiplied by the number of batteries connected in parallel. Connecting multiple batteries in series does not affect the rated charge capacity.

2.21. *Rated energy capacity* means the product (in watt-hours) of the rated battery voltage and the rated charge capacity.

2.22. *Standby mode* or *no-battery mode* means the condition in which:

(1) The battery charger is connected to the main electricity supply;

(2) The battery is not connected to the charger; and

(3) For battery chargers with manual on-off switches, all such switches are turned on.

2.23. *Total harmonic distortion* (THD), expressed as a percent, is the root mean square (RMS) value of an AC signal after the fundamental component is removed and interharmonic components are ignored, divided by the RMS value of the fundamental component.

2.24. *Unit under test* (UUT) in this appendix refers to the combination of the battery charger and battery being tested.

3. Standard Test Conditions

3.1. General

The values that may be measured or calculated during the conduct of this test procedure have been summarized for easy reference in Table 3.1.

TABLE 3.1— LIST OF MEASURED OR CALCULATED VALUES

Name of measured or calculated value	Reference	Value
1. Duration of the charge and maintenance mode test	Section 5.2	.....
2. Battery Discharge Energy	Section 4.6	
3. Initial time and power (W) of the input current of connected battery	Section 5.8	
4. Active and Maintenance Mode Energy Consumption	Section 5.8	
5. Maintenance Mode Power	Section 5.9	
6. 24 Hour Energy Consumption	Section 5.10	
7. Standby Mode Power	Section 5.11	
8. Off Mode Power	Section 5.12	

3.2. Verifying Accuracy and Precision of Measuring Equipment

a. Measurements of active power of 0.5 W or greater shall be made with an uncertainty of ≤2 percent at the 95 percent confidence level. Measurements of active power of less than 0.5 W shall be made with an uncertainty of ≤0.01 W at the 95 percent confidence level. The power measurement instrument shall, as applicable, have a resolution of:

(1) 0.01 W or better for measurements up to 10 W;

(2) 0.1 W or better for measurements of 10 to 100 W; or

(3) 1 W or better for measurements over 100 W.

b. Measurements of energy (Wh) shall be made with an uncertainty of ≤2 percent at the 95 percent confidence level. Measurements of voltage and current shall be made with an uncertainty of ≤1 percent at the 95 percent confidence level. Measurements of temperature shall be made with an uncertainty of ≤2 °C at the 95 percent confidence level.

c. All equipment used to conduct the tests must be selected and calibrated to ensure that measurements will meet the above uncertainty requirements. For suggestions on measuring low power levels, see IEC 62301, (Reference for guidance only, see §430.4) especially Section 5.3.2 and Annexes B and D.

3.3. Setting Up the Test Room

All tests, battery conditioning, and battery rest periods shall be carried out in a room with an air speed immediately surrounding the UUT of ≤0.5 m/s. The ambient temperature shall be maintained at 20 °C ±5 °C throughout the test. There shall be no intentional cooling of the UUT such as by use of separately powered fans, air conditioners, or heat sinks. The UUT shall be conditioned, rested, and tested on a thermally non-conductive surface. When not undergoing active testing, batteries shall be stored at 20 °C ±5 °C.

3.4. Verifying the UUT's Input Voltage and Input Frequency

a. If the UUT is intended for operation on AC line-voltage input in the United States, it shall be tested at 115 V at 60 Hz. If the UUT is intended for operation on AC line-voltage input but cannot be operated at 115 V at 60 Hz, it shall not be tested.

b. If a charger is powered by a low-voltage DC or AC input, and the manufacturer packages the charger with a wall adapter, sells, or recommends an optional wall adapter capable of providing that low voltage input, then the charger shall be tested using that wall adapter and the input reference source shall be 115 V at 60 Hz. If the wall adapter cannot be operated with AC input voltage at 115 V at 60 Hz, the charger shall not be tested.

c. If the UUT is designed for operation only on DC input voltage and the provisions of paragraph 3.4 (b) above do not apply, it shall be tested with one of the following input voltages: 5.0 V DC for products drawing power from a computer USB port or the midpoint of the rated input voltage range for all

other products. The input voltage shall be within ±1 percent of the above specified voltage.

d. If the input voltage is AC, the input frequency shall be within ±1 percent of the specified frequency. The THD of the input voltage shall be ≤2 percent, up to and including the 13th harmonic. The crest factor of the input voltage shall be between 1.34 and 1.49.

e. If the input voltage is DC, the AC ripple voltage (RMS) shall be:

(1) ≤0.2 V for DC voltages up to 10 V; or

(2) ≤2 percent of the DC voltage for DC voltages over 10 V.

UNIT UNDER TEST SETUP REQUIREMENTS

4.1. General Setup

a. The battery charger system shall be prepared and set up in accordance with the manufacturer's instructions, except where those instructions conflict with the requirements of this test procedure. If no instructions are given, then factory or ''default'' settings shall be used, or where there are no indications of such settings, the UUT shall be tested in the condition as it would be supplied to an end user.

b. If the battery charger has user controls to select from two or more charge rates (such as regular or fast charge) or different charge currents, the test shall be conducted at the fastest charge rate that is recommended by the manufacturer for everyday use, or, failing any explicit recommendation, the factory-default charge rate. If the charger has user controls for selecting special charge cycles that are recommended only for occasional use to preserve battery health, such as equalization charge, removing memory, or battery conditioning, these modes are not required to be tested. The settings of the controls shall be listed in the report for each test.

4.2. Selection and Treatment of the Battery Charger

The UUT, including the battery charger and its associated battery, shall be new products of the type and condition that would be sold to a customer. If the battery is lead-acid chemistry and the battery is to be stored for more than 24 hours between its initial acquisition and testing, the battery shall be charged before such storage.

4.3. Selection of Batteries To Use for Testing

a. For chargers with integral batteries, the battery packaged with the charger shall be used for testing. For chargers with detachable batteries, the battery or batteries to be used for testing will vary depending on whether there are any batteries packaged with the battery charger.

(1) If batteries are packaged with the charger, batteries for testing shall be selected from the batteries packaged with the battery charger, according to the procedure in section 4.3.b.

(2) If no batteries are packaged with the charger, but the instructions specify or recommend batteries for use with the charger, batteries for testing shall be selected from those recommended or specified in the instructions, according to the procedure in section 4.3.b.

(3) If no batteries are packaged with the charger and the instructions do not specify or recommend batteries for use with the charger, batteries for testing shall be selected from any that are suitable for use with the charger, according to the procedure in section 4.3.b.

b. From the detachable batteries specified above, the technician shall use Table 4.1 to select the batteries to be used for testing depending on the type of charger being tested. Each row in the table represents a mutually exclusive charger type. The technician shall find the single applicable row for the UUT, and test according to those requirements.

c. A charger is considered as:

(1) Single-capacity if all associated batteries have the same rated charge capacity (see definition) and, if it is a batch charger, all configurations of the batteries have the same rated charge capacity.

(2) Multi-capacity if there are associated batteries or configurations of batteries that have different rated charge capacities.

d. The selected battery or batteries will be referred to as the ''test battery'' and will be used through the remainder of this test procedure.

TABLE 4.1—BATTERY SELECTION FOR TESTING

Type of charger			Tests to perform	
Multi-voltage	Multi-port	Multi-capacity	Number of tests	Battery selection (from all configurations of all associated batteries)
No	No	No	1	Any associated battery.
No	No	Yes	2	Lowest charge capacity battery. Highest charge capacity battery.
No	Yes	Yes or No	2	Use only one port and use the minimum number of batteries with the lowest rated charge capacity that the charger can charge. Use all ports and use the maximum number of identical batteries of the highest rated charge capacity the charger can accommodate.

TABLE 4.1—BATTERY SELECTION FOR TESTING—Continued

Type of charger			Tests to perform	
Multi-voltage	Multi-port	Multi-capacity	Number of tests	Battery selection (from all configurations of all associated batteries)
Yes	No	No	2	Lowest voltage battery. Highest voltage battery.
Yes	Yes to either or both		3	Of the batteries with the lowest voltage, use the one with the lowest charge capacity. Use only one port. Of the batteries with the highest voltage, use the one with the lowest charge capacity. Use only one port. Use all ports and use the battery or the configuration of batteries with the highest total rated energy capacity.

4.4. Limiting Other Non-Battery-Charger Functions

a. If the battery charger or product containing the battery charger does not have any additional functions unrelated to battery charging, this subsection may be skipped.

b. Any optional functions controlled by the user and not associated with the battery charging process (*e.g.*, the answering machine in a cordless telephone charging base) shall be switched off. If it is not possible to switch such functions off, they shall be set to their lowest power-consuming mode during the test.

c. If the battery charger takes any physically separate connectors or cables not required for battery charging but associated with its other functionality (such as phone lines, serial or USB connections, Ethernet, cable TV lines, *etc.*), these connectors or cables shall be left disconnected during the testing.

d. Any manual on-off switches specifically associated with the battery charging process shall be switched on for the duration of the charge, maintenance, and no-battery mode tests, and switched off for the off mode test.

4.5. Accessing the Battery for the Test

a. The technician may need to disassemble the end-use product or battery charger to gain access to the battery terminals for the Battery Discharge Energy Test in section 5.6. If the battery terminals are not clearly labeled, the technician shall use a voltmeter to identify the positive and negative terminals. These terminals will be the ones that give the largest voltage difference and are able to deliver significant current (0.2 C or 1/hr) into a load.

b. All conductors used for contacting the battery must be cleaned and burnished prior to connecting in order to decrease voltage drops and achieve consistent results.

c. Manufacturer's instructions for disassembly shall be followed, except those instructions that:

(1) Lead to any permanent alteration of the battery charger circuitry or function;

(2) Could alter the energy consumption of the battery charger compared to that experienced by a user during typical use, *e.g.*, due to changes in the airflow through the enclosure of the UUT; or

(3) Conflict requirements of this test procedure.

d. Care shall be taken by the technician during disassembly to follow appropriate safety precautions. If the functionality of the device or its safety features is compromised, the product shall be discarded after testing.

e. Some products may include protective circuitry between the battery cells and the remainder of the device. If the manufacturer provides a description for accessing the connections at the output of the protective circuitry, these connections shall be used to discharge the battery and measure the discharge energy. The energy consumed by the protective circuitry during discharge shall not be measured or credited as battery energy.

f. If the technician, despite diligent effort and use of the manufacturer's instructions, encounters any of the following conditions noted immediately below, the Battery Discharge Energy and the Charging and Maintenance Mode Energy shall be reported as ''Not Applicable'':

(1) Inability to access the battery terminals;

(2) Access to the battery terminals destroys charger functionality; or

(3) Inability to draw current from the test battery.

4.6. Determining Charge Capacity for Batteries With No Rating

If there is no rating for the battery charge capacity on the battery or in the instructions, then the technician shall determine a discharge current that meets the following requirements. The battery shall be fully charged and then discharged at this constant-current rate until it reaches the end-of-discharge voltage specified in Table 5.2.

The discharge time must be not less than 4.5 hours nor more than 5 hours. In addition, the discharge test (Section 5.6) (which may not be starting with a fully-charged battery) shall reach the end-of-discharge voltage within 5 hours. The same discharge current shall be used for both the preparations step (Section 5.4) and the discharge test (Section 5.6). The test report shall include the discharge current used and the resulting discharge times for both a fully-charged battery and for the discharge test.

For this section, the battery is considered as ''fully charged'' when either (a) it has been charged by the UUT until an indicator on the UUT shows that the charge is complete, or (b) it has been charged by a battery analyzer at a current not greater than the discharge current until the battery analyzer indicates that the battery is fully charged.

When there is no capacity rating, a suitable discharge current must generally be determined by trial and error. Since the conditioning step does not require constant-current discharges, the trials themselves may also be counted as part of battery conditioning.

5. Test Measurement

The test sequence to measure the battery charger energy consumption is summarized in Table 5.1, and explained in detail below. Measurements shall be made under test conditions and with the equipment specified in Sections 3 and 4.

TABLE 5.1—TEST SEQUENCE

Step	Description	Data taken?	Equipment needed				
			Test battery	Charger	Battery analyzer or constant-current load	AC power meter	Thermometer (for flooded lead-acid battery chargers only)
1	Record general data on UUT; Section 5.1	Yes	X	X			
2	Determine test duration; Section 5.2	No					
3	Battery conditioning; Section 5.3	No	X	X	X		
4	Prepare battery for charge test; Section 5.4	No	X	X			
5	Battery rest period; Section 5.5	No	X				X
6	Conduct Charge Mode and Battery Maintenance Mode Test; Section 5.6.	Yes	X	X		X	
7	Battery Rest Period; Section 5.7	No	X				X
8	Battery Discharge Energy Test; Section 5.8	Yes	X		X		
9	Determining the Maintenance Mode Power; Section 5.9.	Yes	X	X		X	
10	Calculating the 24–Hour Energy Consumption; Section 5.10.	No					
11	Standby Mode Test; Section 5.11	Yes		X		X	
12	Off Mode Test; Section 5.12	Yes		X		X	

5.1. Recording General Data on the UUT

The technician shall record:

(1) The manufacturer and model of the battery charger;

(2) The presence and status of any additional functions unrelated to battery charging;

(3) The manufacturer, model, and number of batteries in the test battery;

(4) The rated battery voltage of the test battery;

(5) The rated charge capacity of the test battery; and

(6) The rated charge energy of the test battery.

(7) The settings of the controls, if battery charger has user controls to select from two or more charge rates

5.2. Determining the Duration of the Charge and Maintenance Mode Test

a. The charging and maintenance mode test, described in detail in section 5.8, shall be 24 hours in length or longer, as determined by the items below. Proceed in order until a test duration is determined.

(1) If the battery charger has an indicator to show that the battery is fully charged, that indicator shall be used as follows: If the indicator shows that the battery is charged after 19 hours of charging, the test shall be terminated at 24 hours. Conversely, if the full-charge indication is not yet present after 19 hours of charging, the test shall continue until 5 hours after the indication is present.

(2) If there is no indicator, but the manufacturer's instructions indicate that charging this battery or this capacity of battery should be complete within 19 hours, the test shall be for 24 hours. If the instructions indicate that charging may take longer than 19 hours, the test shall be run for the longest estimated charge time plus 5 hours.

(3) If there is no indicator and no time estimate in the instructions, but the charging

current is stated on the charger or in the instructions, calculate the test duration as the longer of 24 hours or:

$$Duration = 1.4 \cdot \frac{RatedChargeCapacity\,(\mathrm{Ah})}{ChargeCurrent\,(\mathrm{A})} + 5\mathrm{h}$$

b. If none of the above applies, the duration of the test shall be 24 hours.

5.3. Battery Conditioning

a. No conditioning is to be done on lead-acid or lithium-ion batteries. The test technician shall proceed directly to battery preparation, section 5.4, when testing chargers for these batteries.

b. Products with integral batteries will have to be disassembled per the instructions in section 4.5, and the battery disconnected from the charger for discharging.

c. Batteries of other chemistries that have not been previously cycled are to be conditioned by performing two charges and two discharges, followed by a charge, as below. No data need be recorded during battery conditioning.

(1) The test battery shall be fully charged for the duration specified in section 5.2 or longer using the UUT.

(2) The test battery shall then be fully discharged using either:

(i) A battery analyzer at a rate not to exceed 1 C, until its average cell voltage under load reaches the end-of-discharge voltage specified in Table 5.2 for the relevant battery chemistry; or

(ii) The UUT, until the UUT ceases operation due to low battery voltage.

(3) The test battery shall again be fully charged as in step c.(1) of this section.

(4) The test battery shall again be fully discharged as per step c.(2) of this section.

(5) The test battery shall be again fully charged as in step c.(1) of this section.

d. Batteries of chemistries other than lead-acid or lithium-ion that are known to have been through at least two previous full charge/discharge cycles shall only be charged once per step c.(5), of this section.

5.4. Preparing the Battery for Charge Testing

Following any conditioning prior to beginning the battery charge test (section 5.6), the test battery shall be fully discharged for the duration specified in section 5.2 or longer using a battery analyzer.

5.5. Resting the Battery

The test battery shall be rested between preparation and the battery charge test. The rest period shall be at least one hour and not exceed 24 hours. For batteries with flooded cells, the electrolyte temperature shall be less than 30 °C before charging, even if the rest period must be extended longer than 24 hours.

5.6. Testing Charge Mode and Battery Maintenance Mode

a. The Charge and Battery Maintenance Mode test measures the energy consumed during charge mode and some time spent in the maintenance mode of the UUT. Functions required for battery conditioning that happen only with some user-selected switch or other control shall not be included in this measurement. (The technician shall manually turn off any battery conditioning cycle or setting.) Regularly occurring battery conditioning or maintenance functions that are not controlled by the user will, by default, be incorporated into this measurement.

b. During the measurement period, input power values to the UUT shall be recorded at least once every minute.

(1) If possible, the technician shall set the data logging system to record the average power during the sample interval. The total energy is computed as the sum of power samples (in watts) multiplied by the sample interval (in hours).

(2) If this setting is not possible, then the power analyzer shall be set to integrate or accumulate the input power over the measurement period and this result shall be used as the total energy.

c. The technician shall follow these steps:

(1) Ensure that the user-controllable device functionality not associated with battery charging and any battery conditioning cycle or setting are turned off, as instructed in section 4.4;

(2) Ensure that the test battery used in this test has been conditioned, prepared, discharged, and rested as described in sections 5.3 through 5.7;

(3) Connect the data logging equipment to the battery charger;

(4) Record the start time of the measurement period, and begin logging the input power;

(5) Connect the test battery to the battery charger within 3 minutes of beginning logging. For integral battery products, connect the product to a cradle or wall adapter within 3 minutes of beginning logging;

(6) After the test battery is connected, record the initial time and power (W) of the input current to the UUT. These measurements shall be taken within the first 10 minutes of active charging;

(7) Record the input power for the duration of the ''Charging and Maintenance Mode Test'' period, as determined by section 5.2. The actual time that power is connected to the UUT shall be within ±5 minutes of the specified period; and

(8) Disconnect power to the UUT, terminate data logging, and record the final time.

5.7. Resting the Battery

The test battery shall be rested between charging and discharging. The rest period shall be at least 1 hour and not more than 4 hours, with an exception for flooded cells. For batteries with flooded cells, the electrolyte temperature shall be less than 30 °C before charging, even if the rest period must be extended beyond 4 hours.

5.8. Battery Discharge Energy Test

a. If multiple batteries were charged simultaneously, the discharge energy is the sum of the discharge energies of all the batteries.

(1) For a multi-port charger, batteries that were charged in separate ports shall be discharged independently.

(2) For a batch charger, batteries that were charged as a group may be discharged individually, as a group, or in sub-groups connected in series and/or parallel. The position of each battery with respect to the other batteries need not be maintained.

b. During discharge, the battery voltage and discharge current shall be sampled and recorded at least once per minute. The values recorded may be average or instantaneous values.

c. For this test, the technician shall follow these steps:

(1) Ensure that the test battery has been charged by the UUT and rested according to the procedures above.

(2) Set the battery analyzer for a constant discharge current of 0.2 °C and the end-of-discharge voltage in Table 5.2 for the relevant battery chemistry.

(3) Connect the test battery to the analyzer and begin recording the voltage, current, and wattage, if available from the battery analyzer. When the end-of-discharge voltage is reached or the UUT circuitry terminates the discharge, the test battery shall be returned to an open-circuit condition. If current continues to be drawn from the test battery after the end-of-discharge condition is first reached, this additional energy is not to be counted in the battery discharge energy.

d. If not available from the battery analyzer, the battery discharge energy (in watt-hours) is calculated by multiplying the voltage (in volts), current (in amperes), and sample period (in hours) for each sample, and then summing over all sample periods until the end-of-discharge voltage is reached.

5.9. Determining the Maintenance Mode Power

After the measurement period is complete, the technician shall determine the average maintenance mode power consumption by examining the power-versus-time data from the charge and maintenance test and:

(1) If the maintenance mode power is cyclic or shows periodic pulses, compute the average power over a time period that spans a whole number of cycles and includes at least the last 4 hours.

(2) Otherwise, calculate the average power value over the last 4 hours.

5.10. Determining the 24-Hour Energy Consumption

The accumulated energy or the average input power, integrated over the test period from the charge and maintenance mode test, shall be used to calculate 24-hour energy consumption.

TABLE 5.2—REQUIRED BATTERY DISCHARGE RATES AND END-OF-DISCHARGE BATTERY VOLTAGES

Battery chemistry	Discharge rate *C*	End-of-discharge voltage *volts per cell*
Valve-Regulated Lead Acid (VRLA)	0.2	1.75
Flooded Lead Acid	0.2	1.70
Nickel Cadmium (NiCd)	0.2	1.0
Nickel Metal Hydride (NiMH)	0.2	1.0
Lithium Ion (Li-Ion)	0.2	2.5
Lithium Polymer	0.2	2.5
Rechargeable Alkaline	0.2	0.9
Nanophosphate Lithium Ion	0.2	2.0
Silver Zinc	0.2	1.2

5.11. Standby Mode Energy Consumption Measurement

The standby mode measurement depends on the configuration of the battery charger, as follows.

a. Conduct a measurement of standby power consumption while the battery charger is connected to the power source. Disconnect the battery from the charger, allow the charger to operate for at least 30 minutes, and record the power (*i.e.*, watts) consumed as the time series integral of the power consumed over a 10-minute test period, divided by the period of measurement. If the battery charger has manual on-off switches, all must be turned on for the duration of the standby mode test.

b. Standby mode may also apply to products with integral batteries. If the product

uses a cradle and/or adapter for power conversion and charging, then ''disconnecting the battery from the charger'' will require disconnection of the end-use product, which contains the batteries. The other enclosures of the battery charging system will remain connected to the main electricity supply, and standby mode power consumption will equal that of the cradle and/or adapter alone.

c. If the product is powered through a detachable AC power cord and contains integrated power conversion and charging circuitry, then only the cord will remain connected to mains, and standby mode power consumption will equal that of the AC power cord (*i.e.*, zero watts).

d. Finally, if the product contains integrated power conversion and charging circuitry but is powered through a non-detachable AC power cord or plug blades, then no part of the system will remain connected to mains, and standby mode measurement is not applicable.

5.12. Off Mode Energy Consumption Measurement

The off mode measurement depends on the configuration of the battery charger, as follows.

a. If the battery charger has manual on-off switches, record a measurement of off mode energy consumption while the battery charger is connected to the power source. Remove the battery from the charger, allow the charger to operate for at least 30 minutes, and record the power (*i.e.*, watts) consumed as the time series integral of the power consumed over a 10-minute test period, divided by the period of measurement, with all manual on-off switches turned off. If the battery charger does not have manual on-off switches, record that the off mode measurement is not applicable to this product.

b. Off mode may also apply to products with integral batteries. If the product uses a cradle and/or adapter for power conversion and charging, then ''disconnecting the battery from the charger'' will require disconnection of the end-use product, which contains the batteries. The other enclosures of the battery charging system will remain connected to the main electricity supply, and off mode power consumption will equal that of the cradle and/or adapter alone.

c. If the product is powered through a detachable AC power cord and contains integrated power conversion and charging circuitry, then only the cord will remain connected to mains, and off mode power consumption will equal that of the AC power cord (*i.e.*, zero watts).

d. Finally, if the product contains integrated power conversion and charging circuitry but is powered through a non-detachable AC power cord or plug blades, then no part of the system will remain connected to mains, and off mode measurement is not applicable.

[76 FR 31776, June 1, 2011]

APPENDIX Z TO SUBPART B OF PART 430—UNIFORM TEST METHOD FOR MEASURING THE ENERGY CONSUMPTION OF EXTERNAL POWER SUPPLIES

1. *Scope*: This appendix covers the test requirements used to measure energy consumption of external power supplies.

2. *Definitions*: The following definitions are for the purposes of understanding terminology associated with the test method for measuring external power supply energy consumption. For clarity on any other terminology used in the test method, please refer to IEC Standard 60050 or IEEE Standard 100. (Reference for guidance only, see § 430.4.)

a. *Active mode* means the mode of operation when the external power supply is connected to the main electricity supply and the output is (or ''all outputs are'' for a multiple-voltage external power supply) connected to a load (or ''loads'' for a multiple-voltage external power supply).

b. *Active mode efficiency* is the ratio, expressed as a percentage, of the total real output power produced by a power supply to the real input power required to produce it. (Reference for guidance only, see IEEE Standard 1515–2000, 4.3.1.1, § 430.4.)

c. *Active power (P)* (also *real power*) means the average power consumed by a unit. For a two terminal device with current and voltage waveforms i(t) and v(t) which are periodic with period T, the real or active power P is:

$$P = \frac{1}{T}\int_0^T v(t)i(t)dt$$

d. *Ambient temperature* means the temperature of the ambient air immediately surrounding the unit under test.

e. *Apparent power* (S) is the product of RMS voltage and RMS current (VA).

f. *Instantaneous power* means the product of the instantaneous voltage and instantaneous current at a port (the terminal pair of a load).

g. *Manual on-off switch* is a switch activated by the user to control power reaching the device. This term does not apply to any mechanical, optical, or electronic switches that automatically disconnect mains power from the device when a load is disconnected from the device, or that control power to the load itself.

h. *Minimum output current* means the minimum current that must be drawn from an output bus for an external power supply to operate within its specifications.

i. *Multiple-voltage external power supply* means an external power supply that is designed to convert line voltage AC input into more than one simultaneous lower-voltage output.

j. *Nameplate input frequency* means the AC input frequency of the power supply as specified on the manufacturer's label on the power supply housing.

k. *Nameplate input voltage* means the AC input voltage of the power supply as specified on the manufacturer's label on the power supply housing.

l. *Nameplate output current* means the current output of the power supply as specified on the manufacturer's label on the power supply housing (either DC or AC) or, if absent from the housing, as provided by the manufacturer.

m. *Nameplate output power* means the power output of the power supply as specified on the manufacturer's label on the power supply housing or, if absent from the housing, as specified in documentation provided by the manufacturer.

n. *Nameplate output voltage* means the voltage output of the power supply as specified on the manufacturer's label on the power supply housing (either DC or AC).

o. *No-load mode* means the mode of operation when an external power supply is connected to the main electricity supply and the output is (or ''all outputs are'' for a multiple-voltage external power supply) not connected to a load (or ''loads'' for a multiple-voltage external power supply).

p. *Off mode* is the condition, applicable only to units with manual on-off switches, in which the external power supply is (1) connected to the main electricity supply; (2) the output is not connected to any load; and (3) all manual on-off switches are turned off.

q. *Output bus* means any of the outputs of the power supply to which loads can be connected and from which power can be drawn, as opposed to signal connections used for communication.

r. *Single-voltage external AC–AC power supply* means an external power supply that is designed to convert line voltage AC input into lower voltage AC output and is able to convert to only one AC output voltage at a time.

s. *Single-voltage external AC–DC power supply* means an external power supply that is designed to convert line voltage AC input into lower-voltage DC output and is able to convert to only one DC output voltage at a time.

t. *Standby mode* means the condition in which the external power supply is in no-load mode and, for external power supplies with manual on-off switches, all such switches are turned on.

u. *Switch-selectable single voltage external power supply* means a single-voltage AC–AC or AC–DC power supply that allows users to choose from more than one output voltage.

v. *Total harmonic distortion*, expressed as a percentage, is the RMS value of an AC signal after the fundamental component is removed and interharmonic components are ignored, divided by the RMS value of the fundamental component. THD of current is defined as:

$$THD_I = \frac{\sqrt{I_2^2 + I_3^2 + I_4^2 + I_5^2 + \ldots\ldots I_n^2}}{I_1}$$

where I_n is the RMS value of the nth harmonic of the current signal.

w. *True power factor* (PF) is the ratio of the active power (P) consumed in watts to the apparent power (S), drawn in volt-amperes.

$$PF = \frac{P}{S}$$

This definition of power factor includes the effect of both distortion and displacement.

x. *Unit under test* is the external power supply being tested.

3. *Test Apparatus and General Instructions:*

(a) Single-Voltage External Power Supply. The test apparatus, standard testing conditions, and instructions for testing external power supplies shall conform to the requirements specified in section 4, ''General Conditions for Measurement,'' of the CEC's ''Test Method for Calculating the Energy Efficiency of Single-Voltage External AC–DC and AC–AC Power Supplies,'' August 11, 2004. The test voltage specified in section 4.d, ''Test Voltage,'' shall only be 115 volts, 60 Hz.

(b) Multiple-Voltage External Power Supply. Unless otherwise specified, measurements shall be made under test conditions and with equipment specified below.

(i) Verifying Accuracy and Precision of Measuring Equipment

(A) Measurements of power 0.5 W or greater shall be made with an uncertainty of ≤2 percent at the 95 percent confidence level. Measurements of power less than 0.5 W shall be made with an uncertainty of ≤0.01 W at the 95 percent confidence level. The power measurement instrument shall have a resolution of:

(1) 0.01 W or better for measurements up to 10 W;

(2) 0.1 W or better for measurements of 10 to 100 W; or

(3) 1 W or better for measurements over 100 W.

(B) Measurements of energy (Wh) shall be made with an uncertainty of ≤2 percent at the 95 percent confidence level. Measurements of voltage and current shall be made with an uncertainty of ≤1 percent at the 95 percent confidence level. Measurements of

temperature shall be made with an uncertainty of ≤2 °C at the 95 percent confidence level.

(C) All equipment used to conduct the tests must be selected and calibrated to ensure that measurements will meet the above uncertainty requirements. For guidance on measuring low power levels, see IEC 62301, Section 5.3.2 and Annexes B and D (Reference for guidance only, see § 430.4).

(ii) Setting Up the Test Room

All tests shall be carried out in a room with an air speed immediately surrounding the UUT of ≤0.5 m/s. The ambient temperature shall be maintained at 20 °C ±5 °C throughout the test. There shall be no intentional cooling of the UUT such as by use of separately powered fans, air conditioners, or heat sinks. The UUT shall be conditioned, rested, and tested on a thermally non-conductive surface. A readily available material such as Styrofoam will be sufficient.

(iii) Verifying the UUT's Input Voltage and Input Frequency

(A) If the UUT is intended for operation on AC line-voltage input in the United States, it shall be tested at 115 V at 60 Hz. If the UUT is intended for operation on AC line-voltage input but cannot be operated at 115 V at 60 Hz, it shall not be tested. The input voltage shall be within ±1 percent of the above specified voltage.

(B) If the input voltage is AC, the input frequency shall be within ±1 percent of the specified frequency. The THD of the input voltage shall be ≤2 percent, up to and including the 13th harmonic. The crest factor of the input voltage shall be between 1.34 and 1.49.

4. *Test Measurement:*

(a) Single-Voltage External Power Supply

(i) Standby Mode and Active Mode Measurement—The measurement of standby mode (also no-load mode) energy consumption and active mode efficiency shall conform to the requirements specified in section 5, ''Measurement Approach'' of the CEC's ''Test Method for Calculating the Energy Efficiency of Single-Voltage External Ac-Dc and Ac-Ac Power Supplies,'' August 11, 2004, (incorporated by reference, see § 430.3). Switch-selectable single-voltage external power supplies shall be tested twice—once at the highest nameplate output voltage and once at the lowest.

(A) If the product has more than two output wires, including those that are necessary for controlling the product, the manufacturer shall supply a connection diagram or test fixture that will allow the testing laboratory to put the unit under test into active mode.

(B) For those external power supplies that cannot sustain output at 100 percent loading condition, this efficiency metric shall not be included. For these external power supplies, the average efficiency is the average of the efficiencies measured at 25 percent, 50 percent, and 75 percent of maximum load.

(C) In the case where the external power supply lists both an instantaneous and continuous output current, it shall be tested at the continuous condition only.

(ii) Off-Mode Measurement—If the external power supply unit under test incorporates manual on-off switches, the unit under test shall be placed in off mode, and its power consumption in off mode measured and recorded. The measurement of the off mode energy consumption shall conform to the requirements specified in section 5, ''Measurement Approach,'' of the CEC's ''Test Method for Calculating the Energy Efficiency of Single-Voltage External Ac-Dc and Ac-Ac Power Supplies,'' August 11, 2004 (incorporated by reference, see § 430.3), with two exceptions. In section 5.a, ''Preparing UUT [Unit Under Test] for Test,'' all manual on-off switches shall be placed in the ''off'' position for the measurement. In section 5.d, ''Testing Sequence,'' the technician shall consider the UUT stable if, over 5 minutes with samples taken at least once every second, the AC input power does not drift from the maximum value observed by more than 1 percent or 50 milliwatts, whichever is greater. The only loading condition that will be measured for off mode is ''Load Condition 5'' in Table 1 of the CEC's test procedure. Switch-selectable single-voltage external power supplies shall have their off mode power consumption measured twice— once at the highest nameplate output voltage and once at the lowest.

(b) Multiple-Voltage External Power Supply—Power supplies must be tested with the output cord packaged with the unit for sale to the consumer, as it is considered part of the unit under test. There are two options for connecting metering equipment to the output of this type of power supply: cut the cord immediately adjacent to the output connector or attach leads and measure the efficiency from the output connector itself. If the power supply is attached directly to the product that it is powering, cut the cord immediately adjacent to the powered product and connect output measurement probes at that point. The tests should be conducted on the sets of output wires that constitute the output busses. If the product has additional wires, these should be left electrically disconnected unless they are necessary for controlling the product. In this case, the manufacturer shall supply a connection diagram or test fixture that will allow the testing laboratory to put the unit under test into active mode.

(i) Standby-Mode and Active-Mode Measurement—The measurement of the multiple-voltage external power supply standby mode

(also no-load-mode) energy consumption and active-mode efficiency shall be as follows:

(A) Loading conditions and testing sequence. (1) If the unit under test has on-off switches, all switches shall be placed in the ''on'' position. Loading criteria for multiple-voltage external power supplies shall be based on nameplate output current and not on nameplate output power because output voltage might not remain constant.

(2) The unit under test shall operate at 100 percent of nameplate current output for at least 30 minutes immediately before conducting efficiency measurements.

(3) After this warm-up period, the technician shall monitor AC input power for a period of 5 minutes to assess the stability of the unit under test. If the power level does not drift by more than 1 percent from the maximum value observed, the unit under test can be considered stable and measurements can be recorded at the end of the 5-minute period. Measurements at subsequent loading conditions, listed in Table 1, can then be conducted under the same 5-minute stability guidelines. Only one warm-up period of 30 minutes is required for each unit under test at the beginning of the test procedure.

(4) If AC input power is not stable over a 5-minute period, the technician shall follow the guidelines established by IEC Standard 62301 for measuring average power or accumulated energy over time for both input and output. (Reference for guidance only, see § 430.4).

(5) The unit under test shall be tested at the loading conditions listed in Table 1, derated per the proportional allocation method presented in the following section.

TABLE 1—LOADING CONDITIONS FOR UNIT UNDER TEST

Loading Condition 1	100% of Derated Nameplate Output Current ±2%.
Loading Condition 2	75% of Derated Nameplate Output Current ±2%.
Loading Condition 3	50% of Derated Nameplate Output Current ±2%.
Loading Condition 4	25% of Derated Nameplate Output Current ±2%.
Loading Condition 5	0%.

(6) Input and output power measurements shall be conducted in sequence from Loading Condition 1 to Loading Condition 4, as indicated in Table 1. For Loading Condition 5, the unit under test shall be placed in no-load mode, any additional signal connections to the unit under test shall be disconnected, and input power shall be measured.

(B) Proportional allocation method for loading multiple-voltage external power supplies. For power supplies with multiple voltage busses, defining consistent loading criteria is difficult because each bus has its own nameplate output current. The sum of the power dissipated by each bus loaded to its nameplate output current may exceed the overall nameplate output power of the power supply. The following proportional allocation method must be used to provide consistent loading conditions for multiple-voltage external power supplies. For additional explanation, please refer to section 6.1.1 of the California Energy Commission's ''Proposed Test Protocol for Calculating the Energy Efficiency of Internal Ac-Dc Power Supplies Revision 6.2,'' November 2007.

(1) Consider a multiple-voltage power supply with N output busses, and nameplate output voltages $V_{I,}$ * * *, V_N, corresponding output current ratings $I_{I,}$ * * *, I_N, and a nameplate output power P. Calculate the derating factor D by dividing the power supply nameplate output power P by the sum of the nameplate output powers of the individual output busses, equal to the product of bus nameplate output voltage and current I_iV_i, as follows:

$$D = \frac{P}{\sum_{i=1}^{N} V_i I_i},$$

(2) If $D \geq 1$, then loading every bus to its nameplate output current does not exceed the overall nameplate output power for the power supply. In this case, each output bus will simply be loaded to the percentages of its nameplate output current listed in Table 1. However, if $D < 1$, it is an indication that loading each bus to its nameplate output current will exceed the overall nameplate output power for the power supply. In this case, and at each loading condition, each output bus will be loaded to the appropriate percentage of its nameplate output current listed in Table 1, multiplied by the derating factor D.

(C) Minimum output current requirements. Depending on their application, some multiple-voltage power supplies may require a minimum output current for each output bus of the power supply for correct operation. In these cases, ensure that the load current for each output at Loading Condition 4 in Table 1 is greater than the minimum output current requirement. Thus, if the test method's calculated load current for a given voltage bus is smaller than the minimum output current requirement, the minimum output current must be used to load the bus. This load current shall be properly recorded in any test report.

(D) Test loads. Active loads such as electronic loads or passive loads such as rheostats used for efficiency testing of the unit under test shall be able to maintain the required current loading set point for each output voltage within an accuracy of ±0.5 percent. If electronic load banks are used, their

settings should be adjusted such that they provide a constant current load to the unit under test.

(E) Efficiency calculation. Efficiency shall be calculated by dividing the measured active output power of the unit under test at a given loading condition by the active AC input power measured at that loading condition. Efficiency shall be calculated at each Loading Condition (1, 2, 3, and 4, in Table 1) and be recorded separately.

(F) Power consumption calculation. Power consumption of the unit under test at Loading Conditions 1, 2, 3, and 4 is the difference between the active output power at that Loading Condition and the active AC input power at that Loading Condition. The power consumption of Loading Condition 5 (no-load) is equal to the AC active input power at that Loading Condition.

(ii) Off Mode Measurement—If the multiple-voltage external power supply unit under test incorporates any on-off switches, the unit under test shall be placed in off mode and its power consumption in off mode measured and recorded. The measurement of the off mode energy consumption shall conform to the requirements specified in paragraph (4)(b)(i) of this appendix. Note that the only loading condition that will be measured for off mode is ''Loading Condition 5'' in paragraph (A), ''Loading conditions and testing sequence'', except that all manual on-off switches shall be placed in the off position for the measurement.

[71 FR 71366, Dec. 8, 2006, as amended at 74 FR 12066, Mar. 23, 2009; 74 FR 13334, Mar. 27, 2009; 76 FR 31782, June 1, 2011]

Subpart C—Energy and Water Conservation Standards

§ 430.31 Purpose and scope.

This subpart contains energy conservation standards and water conservation standards (in the case of faucets, showerheads, water closets, and urinals) for classes of covered products that are required to be administered by the Department of Energy pursuant to the Energy Conservation Program for Consumer Products Other Than Automobiles under the Energy Policy and Conservation Act, as amended (42 U.S.C. 6291 *et seq.*).

[63 FR 13317, Mar. 18, 1998, as amended at 78 FR 62993, Oct. 23, 2013]

§ 430.32 Energy and water conservation standards and their compliance dates.

The energy and water (in the case of faucets, showerheads, water closets, and urinals) conservation standards for the covered product classes are:

(a) *Refrigerators/refrigerator-freezers/freezers*. These standards do not apply to refrigerators and refrigerator-freezers with total refrigerated volume exceeding 39 cubic feet (1104 liters) or freezers with total refrigerated volume exceeding 30 cubic feet (850 liters). The energy standards as determined by the equations of the following table(s) shall be rounded off to the nearest kWh per year. If the equation calculation is halfway between the nearest two kWh per year values, the standard shall be rounded up to the higher of these values.

The following standards remain in effect from July 1, 2001 until September 15, 2014:

Product class	Energy standard equations for maximum energy use (kWh/yr)
1. Refrigerators and refrigerator-freezers with manual defrost	8.82AV + 248.4 0.31av + 248.4
2. Refrigerator-freezers—partial automatic defrost	8.82AV + 248.4 0.31av + 248.4
3. Refrigerator-freezers—automatic defrost with top-mounted freezer without through-the-door ice service and all-refrigerator—automatic defrost.	9.80AV + 276.0 0.35av + 276.0
4. Refrigerator-freezers—automatic defrost with side-mounted freezer without through-the-door ice service	4.91AV + 507.5 0.17av + 507.5
5. Refrigerator-freezers—automatic defrost with bottom-mounted freezer without through-the-door ice service.	4.60AV + 459.0 0.16av + 459.0
6. Refrigerator-freezers—automatic defrost with top-mounted freezer with through-the-door ice service	10.20AV + 356.0 0.36av + 356.0
7. Refrigerator-freezers—automatic defrost with side-mounted freezer with through-the-door ice service	10.10AV + 406.0 0.36av + 406.0
8. Upright freezers with manual defrost	7.55AV + 258.3 0.27av + 258.3

Product class	Energy standard equations for maximum energy use (kWh/yr)
9. Upright freezers with automatic defrost	12.43AV + 326.1 0.44av + 326.1
10. Chest freezers and all other freezers except compact freezers	9.88AV + 143.7 0.35av + 143.7
11. Compact refrigerators and refrigerator-freezers with manual defrost	10.70AV + 299.0 0.38av + 299.0
12. Compact refrigerator-freezer—partial automatic defrost	7.00AV + 398.0 0.25av + 398.0
13. Compact refrigerator-freezers—automatic defrost with top-mounted freezer and compact all-refrigerator—automatic defrost.	12.70AV + 355.0 0.45av + 355.0
14. Compact refrigerator-freezers—automatic defrost with side-mounted freezer	7.60AV + 501.0 0.27av + 501.0
15. Compact refrigerator-freezers—automatic defrost with bottom-mounted freezer	13.10AV + 367.0 0.46av + 367.0
16. Compact upright freezers with manual defrost	9.78AV + 250.8 0.35av + 250.8
17. Compact upright freezers with automatic defrost	11.40AV + 391.0 0.40av + 391.0
18. Compact chest freezers	10.45AV + 152.0 0.37av + 152.0

AV: Adjusted Volume in ft^3; av: Adjusted Volume in liters (L).

The following standards apply to products manufactured starting on September 15, 2014:

Product class	Equations for maximum energy use (kWh/yr)	
	Based on AV (ft^3)	Based on av (L)
1. Refrigerator-freezers and refrigerators other than all-refrigerators with manual defrost.	7.99AV + 225.0	0.282av + 225.0
1A. All-refrigerators—manual defrost	6.79AV + 193.6	0.240av + 193.6
2. Refrigerator-freezers—partial automatic defrost	7.99AV + 225.0	0.282av + 225.0
3. Refrigerator-freezers—automatic defrost with top-mounted freezer without an automatic icemaker.	8.07AV + 233.7	0.285av + 233.7
3–BI. Built-in refrigerator-freezer—automatic defrost with top-mounted freezer without an automatic icemaker.	9.15AV + 264.9	0.323av + 264.9
3I. Refrigerator-freezers—automatic defrost with top-mounted freezer with an automatic icemaker without through-the-door ice service.	8.07AV + 317.7	0.285av + 317.7
3I–BI. Built-in refrigerator-freezers—automatic defrost with top-mounted freezer with an automatic icemaker without through-the-door ice service.	9.15AV + 348.9	0.323av + 348.9
3A. All-refrigerators—automatic defrost	7.07AV + 201.6	0.250av + 201.6
3A–BI. Built-in All-refrigerators—automatic defrost	8.02AV + 228.5	0.283av + 228.5
4. Refrigerator-freezers—automatic defrost with side-mounted freezer without an automatic icemaker.	8.51AV + 297.8	0.301av + 297.8
4–BI. Built-In Refrigerator-freezers—automatic defrost with side-mounted freezer without an automatic icemaker.	10.22AV + 357.4	0.361av + 357.4
4I. Refrigerator-freezers—automatic defrost with side-mounted freezer with an automatic icemaker without through-the-door ice service.	8.51AV + 381.8	0.301av + 381.8
4I–BI. Built-In Refrigerator-freezers—automatic defrost with side-mounted freezer with an automatic icemaker without through-the-door ice service.	10.22AV + 441.4	0.361av + 441.4
5. Refrigerator-freezers—automatic defrost with bottom-mounted freezer without an automatic icemaker.	8.85AV + 317.0	0.312av + 317.0
5–BI. Built-In Refrigerator-freezers—automatic defrost with bottom-mounted freezer without an automatic icemaker.	9.40AV + 336.9	0.332av + 336.9
5I. Refrigerator-freezers—automatic defrost with bottom-mounted freezer with an automatic icemaker without through-the-door ice service.	8.85AV + 401.0	0.312av + 401.0
5I–BI. Built-In Refrigerator-freezers—automatic defrost with bottom-mounted freezer with an automatic icemaker without through-the-door ice service.	9.40AV + 420.9	0.332av + 420.9
5A. Refrigerator-freezer—automatic defrost with bottom-mounted freezer with through-the-door ice service.	9.25AV + 475.4	0.327av + 475.4
5A–BI. Built-in refrigerator-freezer—automatic defrost with bottom-mounted freezer with through-the-door ice service.	9.83AV + 499.9	0.347av + 499.9
6. Refrigerator-freezers—automatic defrost with top-mounted freezer with through-the-door ice service.	8.40AV + 385.4	0.297av + 385.4
7. Refrigerator-freezers—automatic defrost with side-mounted freezer with through-the-door ice service.	8.54AV + 432.8	0.302av + 432.8
7–BI. Built-In Refrigerator-freezers—automatic defrost with side-mounted freezer with through-the-door ice service.	10.25AV + 502.6	0.362av + 502.6

Product class	Equations for maximum energy use (kWh/yr)	
	Based on AV (ft³)	Based on av (L)
8. Upright freezers with manual defrost	5.57AV + 193.7	0.197av + 193.7
9. Upright freezers with automatic defrost without an automatic icemaker	8.62AV + 228.3	0.305av + 228.3
9I. Upright freezers with automatic defrost with an automatic icemaker	8.62AV + 312.3	0.305av + 312.3
9–BI. Built-In Upright freezers with automatic defrost without an automatic icemaker	9.86AV + 260.9	0.348av + 260.9
9I–BI. Built-in upright freezers with automatic defrost with an automatic icemaker	9.86AV + 344.9	0.348av + 344.9
10. Chest freezers and all other freezers except compact freezers	7.29AV + 107.8	0.257av + 107.8
10A. Chest freezers with automatic defrost	10.24AV + 148.1	0.362av + 148.1
11. Compact refrigerator-freezers and refrigerators other than all-refrigerators with manual defrost.	9.03AV + 252.3	0.319av + 252.3
11A.Compact all-refrigerators—manual defrost	7.84AV + 219.1	0.277av + 219.1
12. Compact refrigerator-freezers—partial automatic defrost	5.91AV + 335.8	0.209av + 335.8
13. Compact refrigerator-freezers—automatic defrost with top-mounted freezer	11.80AV + 339.2	0.417av + 339.2
13I. Compact refrigerator-freezers—automatic defrost with top-mounted freezer with an automatic icemaker.	11.80AV + 423.2	0.417av + 423.2
13A. Compact all-refrigerators—automatic defrost	9.17AV + 259.3	0.324av + 259.3
14. Compact refrigerator-freezers—automatic defrost with side-mounted freezer	6.82AV + 456.9	0.241av + 456.9
14I. Compact refrigerator-freezers—automatic defrost with side-mounted freezer with an automatic icemaker.	6.82AV + 540.9	0.241av + 540.9
15. Compact refrigerator-freezers—automatic defrost with bottom-mounted freezer	11.80AV + 339.2	0.417av + 339.2
15I. Compact refrigerator-freezers—automatic defrost with bottom-mounted freezer with an automatic icemaker.	11.80AV + 423.2	0.417av + 423.2
16. Compact upright freezers with manual defrost	8.65AV + 225.7	0.306av + 225.7
17. Compact upright freezers with automatic defrost	10.17AV + 351.9	0.359av + 351.9
18. Compact chest freezers	9.25AV + 136.8	0.327av + 136.8

AV = Total adjusted volume, expressed in ft³, as determined in appendices A and B of subpart B of this part.
av = Total adjusted volume, expressed in Liters.

(b) *Room air conditioners.*

Product class	Energy efficiency ratio, effective from Oct. 1, 2000 to May 31, 2014	Combined energy efficiency ratio, effective as of June 1, 2014
1. Without reverse cycle, with louvered sides, and less than 6,000 Btu/h	9.7	11.0
2. Without reverse cycle, with louvered sides, and 6,000 to 7,999 Btu/h	9.7	11.0
3. Without reverse cycle, with louvered sides, and 8,000 to 13,999 Btu/h	9.8	10.9
4. Without reverse cycle, with louvered sides, and 14,000 to 19,999 Btu/h	9.7	10.7
5a. Without reverse cycle, with louvered sides, and 20,000 to 27,999 Btu/h	8.5	9.4
5b. Without reverse cycle, with louvered sides, and 28,000 Btu/h or more	8.5	9.0
6. Without reverse cycle, without louvered sides, and less than 6,000 Btu/h	9.0	10.0
7. Without reverse cycle, without louvered sides, and 6,000 to 7,999 Btu/h	9.0	10.0
8a. Without reverse cycle, without louvered sides, and 8,000 to 10,999 Btu/h	8.5	9.6
8b. Without reverse cycle, without louvered sides, and 11,000 to 13,999 Btu/h	8.5	9.5
9. Without reverse cycle, without louvered sides, and 14,000 to 19,999 Btu/h	8.5	9.3
10. Without reverse cycle, without louvered sides, and 20,000 Btu/h or more	8.5	9.4
11. With reverse cycle, with louvered sides, and less than 20,000 Btu/h	9.0	9.8
12. With reverse cycle, without louvered sides, and less than 14,000 Btu/h	8.5	9.3
13. With reverse cycle, with louvered sides, and 20,000 Btu/h or more	8.5	9.3
14. With reverse cycle, without louvered sides, and 14,000 Btu/h or more	8.0	8.7
15. Casement-Only	8.7	9.5
16. Casement-Slider	9.5	10.4

(c) *Central air conditioners and heat pumps.* The energy conservation standards defined in terms of the heating seasonal performance factor are based on Region IV, the minimum standardized design heating requirement, and the sampling plan stated in § 430.24(m).

(1) Split system central air conditioners and central air conditioning heat pumps manufactured after January 1, 1992, and before January 23, 2006, and single package central air conditioners and central air conditioning heat pumps manufactured after January 1, 1993, and before January 23, 2006, shall have Seasonal Energy Efficiency Ratio and Heating Seasonal Performance Factor no less than:

Product class	Seasonal energy efficiency ratio	Heating seasonal performance factor
(i) Split systems	10.0	6.8
(ii) Single package systems	9.7	6.6

(2) Central air conditioners and central air conditioning heat pumps manufactured on or after January 23, 2006, and before January 1, 2015, shall have Seasonal Energy Efficiency Ratio and Heating Seasonal Performance Factor no less than:

Product class [1]	Seasonal energy efficiency ratio (SEER)	Heating seasonal performance factor (HSPF)
(i) Split-system air conditioners	13	
(ii) Split-system heat pumps	13	7.7
(iii) Single-package air conditioners	13	
(iv) Single-package heat pumps	13	7.7
(v)(A) Through-the-wall air conditioners and heat pumps-split system	10.9	7.1
(v)(B) Through-the-wall air conditioners and heat pumps-single package	10.6	7.0
(vi) Small-duct, high-velocity systems	11	6.8
(vii)(A) Space-constrained products—air conditioners	12	
(vii)(B) Space-constrained products—heat pumps	12	7.4

[1] The "through-the-wall air conditioners and heat pump—split system" and "through-the-wall air conditioner and heat pump—single package" product classes only applied to products manufactured prior to January 23, 2010. Products manufactured as of that date must be assigned to one of the remaining product classes listed in this table. The product class assignment depends on the product's characteristics. Product class definitions can be found in 10 CFR 430.2 and 10 CFR part 430, subpart B, appendix M. DOE believes that most, if not all, of the historically-characterized "through-the-wall" products will be assigned to one of the space-constrained product classes.

(3) Central air conditioners and central air conditioning heat pumps manufactured on or after January 1, 2015, shall have a Seasonal Energy Efficiency Ratio and Heating Seasonal Performance Factor not less than:

Product class [1]	Seasonal energy efficiency ratio (SEER)	Heating seasonal performance factor (HSPF)
(i) Split-system air conditioners	13	
(ii) Split-system heat pumps	14	8.2
(iii) Single-package air conditioners	14	
(iv) Single-package heat pumps	14	8.0
(v) Small-duct, high-velocity systems	12	7.2
(vi)(A) Space-constrained products—air conditioners	12	
(vi)(B) Space-constrained products—heat pumps	12	7.4

[1] The "through-the-wall air conditioners and heat pump—split system" and "through-the-wall air conditioner and heat pump—single package" product classes only applied to products manufactured prior to January 23, 2010. Products manufactured as of that date must be assigned to one of the remaining product classes listed in this table. The product class assignment depends on the product's characteristics. Product class definitions can be found in 10 CFR 430.2 and 10 CFR part 430, subpart B, appendix M. DOE believes that most, if not all, of the historically-characterized "through-the-wall" products will be assigned to one of the space-constrained product classes.

(4) In addition to meeting the applicable requirements in paragraph (c)(3) of this section, products in product class (i) of that paragraph (*i.e.*, split-system air conditioners) that are manufactured on or after January 1, 2015, and installed in the States of Alabama, Arkansas, Delaware, Florida, Georgia, Hawaii, Kentucky, Louisiana, Maryland, Mississippi, North Carolina, Oklahoma, South Carolina, Tennessee, Texas, or Virginia, or in the District of Columbia, shall have a Seasonal Energy Efficiency Ratio not less than 14.

(5) In addition to meeting the applicable requirements in paragraphs (c)(3) of this section, products in product classes (i) and (iii) of paragraph (c)(3) (*i.e.*, split-system air conditioners and single-package air conditioners) that are manufactured on or after January 1, 2015, and installed in the States of Arizona, California, Nevada, or New Mexico shall have a Seasonal Energy Efficiency Ratio not less than 14 and have an Energy Efficiency Ratio (at a standard rating of 95 °F dry bulb outdoor temperature) not less than the following:

Product class	Energy efficiency ratio (EER)
(i) Split-system rated cooling capacity less than 45,000 Btu/hr	12.2
(ii) Split-system rated cooling capacity equal to or greater than 45,000 Btu/hr	11.7
(iii) Single-package systems	11.0

(6) Central air conditioners and central air conditioning heat pumps manufactured on or after January 1, 2015, shall have an average off mode electrical power consumption not more than the following:

Product class	Average off mode power consumption $P_{W,OFF}$ (watts)
(i) Split-system air conditioners	30
(ii) Split-system heat pumps	33
(iii) Single-package air conditioners	30
(iv) Single-package heat pumps	33
(v) Small-duct, high-velocity systems	30
(vi) Space-constrained air conditioners	30
(vii) Space-constrained heat pumps	33

(d) *Water heaters*. The energy factor of water heaters shall not be less than the following for products manufactured on or after the indicated dates.

Product class	Energy factor as of January 20, 2004	Energy factor as of April 16, 2015
Gas-fired Water Heater	0.67 – (0.0019 × Rated Storage Volume in gallons).	For tanks with a Rated Storage Volume at or below 55 gallons: EF = 0.675 – (0.0015 × Rated Storage Volume in gallons). For tanks with a Rated Storage Volume above 55 gallons: EF = 0.8012 – (0.00078 × Rated Storage Volume in gallons).
Oil-fired Water Heater	0.59 – (0.0019 × Rated Storage Volume in gallons).	EF = 0.68 – (0.0019 × Rated Storage Volume in gallons).
Electric Water Heater	0.97 – (0.00132 × Rated Storage Volume in gallons).	For tanks with a Rated Storage Volume at or below 55 gallons: EF = 0.960 – (0.0003 × Rated Storage Volume in gallons). For tanks with a Rated Storage Volume above 55 gallons: EF = 2.057 – (0.00113 × Rated Storage Volume in gallons).
Tabletop Water Heater	0.93 – (0.00132 × Rated Storage Volume in gallons).	EF = 0.93 – (0.00132 × Rated Storage Volume in gallons).
Instantaneous Gas-fired Water Heater.	0.62 – (0.0019 × Rated Storage Volume in gallons).	EF = 0.82 – (0.0019 × Rated Storage Volume in gallons).
Instantaneous Electric Water Heater.	0.93 – (0.00132 × Rated Storage Volume in gallons).	EF = 0.93 – (0.00132 × Rated Storage Volume in gallons).

Note: The Rated Storage Volume equals the water storage capacity of a water heater, in gallons, as specified by the manufacturer.

(e) *Furnaces and boilers*. (1) *Furnaces*. (i) The Annual Fuel Utilization Efficiency (AFUE) of residential furnaces shall not be less than the following for non-weatherized furnaces manufactured before May 1, 2013, and weatherized furnaces manufactured before January 1, 2015:

Product class	AFUE (percent) [1]
(A) Furnaces (excluding classes noted below)	78
(B) Mobile Home furnaces	75
(C) Small furnaces (other than those designed solely for installation in mobile homes) having an input rate of less than 45,000 Btu/hr.	
(1) Weatherized (outdoor)	78
(2) Non-weatherized (indoor)	78

[1] Annual Fuel Utilization Efficiency, as determined in § 430.23(n)(2) of this part.

(ii) The AFUE of residential non-weatherized furnaces manufactured on or after May 1, 2013, and weatherized gas and oil-fired furnaces manufactured on or after January 1, 2015 shall be not less than the following:

Product class	AFUE (percent) [1]
(A) Non-weatherized gas furnaces (not including mobile home furnaces)	80
(B) Mobile Home gas furnaces	80
(C) Non-weatherized oil-fired furnaces (not including mobile home furnaces)	83
(D) Mobile Home oil-fired furnaces	75
(E) Weatherized gas furnaces	81
(F) Weatherized oil-fired furnaces	78
(G) Electric furnaces	78

[1] Annual Fuel Utilization Efficiency, as determined in § 430.23(n)(2) of this part.

(iii) In addition to meeting the applicable requirements in paragraph (e)(1)(ii) of this section, products in product classes (A) and (B) of that paragraph (*i.e.*, residential non-weatherized gas furnaces (including mobile home furnaces)) that are manufactured on or after May 1, 2013, and installed in the States of Alaska, Colorado, Connecticut, Idaho, Illinois, Indiana, Iowa, Kansas, Maine, Massachusetts, Michigan, Minnesota, Missouri, Montana, Nebraska, New Hampshire, New Jersey, New York, North Dakota, Ohio, Oregon, Pennsylvania, Rhode Island, South Dakota, Utah, Vermont, Washington, West Virginia, Wisconsin, and Wyoming, shall have an AFUE not less than 90 percent.

(iv) Furnaces manufactured on or after May 1, 2013, shall have an electrical standby mode power consumption ($P_{W,SB}$) and electrical off mode power consumption ($P_{W,OFF}$) not more than the following:

Product class	Maximum standby mode electrical power consumption, $P_{W,SB}$ (watts)	Maximum off mode electrical power consumption, $P_{W,OFF}$(watts)
(A) Non-weatherized gas furnaces (including mobile home furnaces)	10	10
(B) Non-weatherized oil-fired furnaces (including mobile home furnaces)	11	11
(C) Electric furnaces	10	10

(2) *Boilers*. (i) The AFUE of residential boilers manufactured before September 1, 2012, shall not be less than the following:

Product class	AFUE [1] (percent)
(A) Boilers (excluding gas steam)	80
(B) Gas steam boilers	75

[1] Annual Fuel Utilization Efficiency, as determined in § 430.22(n)(2) of this part.

(ii) Except as provided in paragraph (e)(2)(iv) of this section, the AFUE of residential boilers, manufactured on or after September 1, 2012, shall not be less than the following and must comply with the design requirements as follows:

Product class	AFUE [1] (percent)	Design requirements
(A) Gas-fired hot water boiler.	82	Constant burning pilot not permitted. Automatic means for adjusting water temperature required (except for boilers equipped with tankless domestic water heating coils).
(B) Gas-fired steam boiler.	80	Constant burning pilot not permitted.
(C) Oil-fired hot water boiler.	84	Automatic means for adjusting temperature required (except for boilers equipped with tankless domestic water heating coils).
(D) Oil-fired steam boiler.	82	None.
(E) Electric hot water boiler.	None	Automatic means for adjusting temperature required (except for boilers equipped with tankless domestic water heating coils).

[1] Annual Fuel Utilization Efficiency, as determined in § 430.22(n)(2) of this part.

(iii) *Automatic means for adjusting water temperature*. (A) The automatic

means for adjusting water temperature as required under paragraph (e)(2)(ii) of this section must automatically adjust the temperature of the water supplied by the boiler to ensure that an incremental change in inferred heat load produces a corresponding incremental change in the temperature of water supplied.

(B) For boilers that fire at a single input rate, the automatic means for adjusting water temperature requirement may be satisfied by providing an automatic means that allows the burner or heating element to fire only when the means has determined that the inferred heat load cannot be met by the residual heat of the water in the system.

(C) When there is no inferred heat load with respect to a hot water boiler, the automatic means described in this paragraph shall limit the temperature of the water in the boiler to not more than 140 degrees Fahrenheit.

(D) A boiler for which an automatic means for adjusting water temperature is required shall be operable only when the automatic means is installed.

(iv) A boiler that is manufactured to operate without any need for electricity or any electric connection, electric gauges, electric pumps, electric wires, or electric devices is not required to meet the AFUE or design requirements applicable to the boiler requirements of paragraph (e)(2)(ii) of this section, but must meet the requirements of paragraph (e)(2)(i) of this section, as applicable.

(f) *Dishwashers*. (1) The energy factor of dishwashers manufactured on or after May 14, 1994, must not be less than:

Product class	Energy factor (cycles/kWh)
(i) Compact Dishwasher (capacity less than eight place settings plus six serving pieces as specified in ANSI/AHAM DW–1 [Incorporated by reference, see § 430.22] using the test load specified in section 2.7 of appendix C in subpart B)	0.62
(ii) Standard Dishwasher (capacity equal to or greater than eight place settings plus six serving pieces as specified in ANSI/AHAM DW–1 [Incorporated by Reference, see § 430.22] using the test load specified in section 2.7 of appendix C in subpart B)	0.46

(2) All dishwashers manufactured on or after January 1, 2010, shall meet the following standard—

(i) Standard size dishwashers shall not exceed 355 kwh/year and 6.5 gallons per cycle.

(ii) Compact size dishwashers shall not exceed 260 kwh/year and 4.5 gallons per cycle.

(3) All dishwashers manufactured on or after May 30, 2013, shall meet the following standard—

(i) Standard size dishwashers shall not exceed 307 kwh/year and 5.0 gallons per cycle.

(ii) Compact size dishwashers shall not exceed 222 kwh/year and 3.5 gallons per cycle.

(g) *Clothes washers*. (1) Clothes washers manufactured on or after January 1, 2007 shall have a Modified Energy Factor no less than:

Product class	Modified energy factor (cu.ft./kWh/cycle)
i. Top-loading, Compact (less than 1.6 ft^3 capacity).	0.65.
ii. Top-loading, Standard (1.6 ft^3 or greater capacity).	1.26.
iii. Top-Loading, Semi-Automatic	Not Applicable.[1]
iv. Front-loading	1.26.
v. Suds-saving	Not Applicable.[1]

[1] Must have an unheated rinse water option.

(2) All top-loading or front-loading standard-size residential clothes washers manufactured on or after January 1, 2011, and before March 7, 2015, shall meet the following standard—

(i) A Modified Energy Factor of at least 1.26; and

(ii) A Water Factor of not more than 9.5.

(3) Clothes washers manufactured on or after March 7, 2015, and before January 1, 2018, shall have an Integrated Modified Energy Factor no less than, and an Integrated Water Factor no greater than:

Product class	Integrated modified energy factor (cu.ft./kWh/cycle)	Integrated water factor (gal/cycle/cu.ft.)
i. Top-loading, Compact (less than 1.6 ft³ capacity)	0.86	14.4
ii. Top-loading, Standard (1.6 ft³ or greater capacity)	1.29	8.4
iii. Front-loading, Compact (less than 1.6 ft³ capacity)	1.13	8.3
iv. Front-loading, Standard (1.6 ft³ or greater capacity)	1.84	4.7

(4) Clothes washers manufactured on or after January 1, 2018 shall have an Integrated Modified Energy Factor no less than, and an Integrated Water Factor no greater than:

Product class	Integrated modified energy factor (cu.ft./kWh/cycle)	Integrated water factor (gal/cycle/cu.ft.)
i. Top-loading, Compact (less than 1.6 ft³ capacity)	1.15	12.0
ii. Top-loading, Standard (1.6 ft³ or greater capacity)	1.57	6.5
iii. Front-loading, Compact (less than 1.6 ft³ capacity)	1.13	8.3
iv. Front-loading, Standard (1.6 ft³ or greater capacity)	1.84	4.7

(h) *Clothes dryers*. (1) Gas clothes dryers manufactured after January 1, 1988 shall not be equipped with a constant burning pilot.

(2) Clothes dryers manufactured on or after May 14, 1994 and before January 1, 2015, shall have an energy factor no less than:

Product class	Energy factor (lbs/kWh)
i. Electric, Standard (4.4 ft³ or greater capacity)	3.01
ii. Electric, Compact (120V) (less than 4.4 ft³ capacity)	3.13
iii. Electric, Compact (240V) (less than 4.4 ft³ capacity)	2.90
iv. Gas	2.67

(3) Clothes dryers manufactured on or after January 1, 2015, shall have a combined energy factor no less than:

Product class	Combined energy factor (lbs/kWh)
i. Vented Electric, Standard (4.4 ft³ or greater capacity)	3.73
ii. Vented Electric, Compact (120V) (less than 4.4 ft³ capacity)	3.61
iii. Vented Electric, Compact (240V) (less than 4.4 ft³ capacity)	3.27
iv. Vented Gas	3.30
v. Ventless Electric, Compact (240V) (less than 4.4 ft³ capacity)	2.55
vi. Ventless Electric, Combination Washer-Dryer	2.08

(i) *Direct heating equipment*. (1) Vented home heating equipment manufactured on or after January 1, 1990 and before April 16, 2013, shall have an annual fuel utilization efficiency no less than:

Product class	Annual fuel utilization efficiency, Jan. 1, 1990 (percent)
1. Gas wall fan type up to 42,000 Btu/h	73
2. Gas wall fan type over 42,000 Btu/h	74
3. Gas wall gravity type up to 10,000 Btu/h	59
4. Gas wall gravity type over 10,000 Btu/h up to 12, 000 Btu/h	60
5. Gas wall gravity type over 12,000 Btu/h up to 15,000 Btu/h	61
6. Gas wall gravity type over 15,000 Btu/h up to 19,000 Btu/h	62
7. Gas wall gravity type over 19,000 Btu/h and up to 27,000 Btu/h	63
8. Gas wall gravity type over 27,000 Btu/h and up to 46,000 Btu/h	64
9. Gas wall gravity type over 46,000 Btu/h	65
10. Gas floor up to 37,000 Btu/h	56
11. Gas floor over 37,000 Btu/h	57
12. Gas room up to 18,000 Btu/h	57
13. Gas room over 18,000 Btu/h up to 20,000 Btu/h	58
14. Gas room over 20,000 Btu/h up to 27,000 Btu/h	63
15. Gas room over 27,000 Btu/h up to 46,000 Btu/h	64
16. Gas room over 46,000 Btu/h	65

(2) Vented home heating equipment manufactured on or after April 16, 2013, shall have an annual fuel utilization efficiency no less than:

Product class	Annual fuel utilization efficiency, April 16, 2013 (percent)
1. Gas wall fan type up to 42,000 Btu/h	75
2. Gas wall fan type over 42,000 Btu/h	76
3. Gas wall gravity type up to 27,000 Btu/h	65
4. Gas wall gravity type over 27,000 Btu/h up to 46,000 Btu/h	66
5. Gas wall gravity type over 46,000 Btu/h	67
6. Gas floor up to 37,000 Btu/h	57
7. Gas floor over 37,000 Btu/h	58
8. Gas room up to 20,000 Btu/h	61
9. Gas room over 20,000 Btu/h up to 27,000 Btu/h	66
10. Gas room over 27,000 Btu/h up to 46,000 Btu/h	67
11. Gas room over 46,000 Btu/h	68
12. Gas hearth up to 20,000 Btu/h	61
13. Gas hearth over 20,000 Btu/h and up to 27,000 Btu/h	66
14. Gas hearth over 27,000 Btu/h and up to 46,000 Btu/h	67
15. Gas hearth over 46,000 Btu/h	68

(j) *Cooking Products* (1) Gas cooking products with an electrical supply cord manufactured on or after January 1, 1990, shall not be equipped with a constant burning pilot light.

(2) Gas cooking products without an electrical supply cord manufactured on or after April 9, 2012, shall not be equipped with a constant burning pilot light.

(3) Microwave-only ovens and countertop convection microwave ovens manufactured on or after June 17, 2016 shall have an average standby power not more than 1.0 watt. Built-in and over-the-range convection microwave ovens manufactured on or after June 17, 2016 shall have an average standby power not more than 2.2 watts.

(k) *Pool heaters*. (1) Gas-fired pool heaters manufactured on or after January 1, 1990 and before April 16, 2013, shall have a thermal efficiency not less than 78%.

(2) Gas-fired pool heaters manufactured on or after April 16, 2013, shall have a thermal efficiency not less than 82%.

(l) *Television sets*. [Reserved]

(m)(1) *Fluorescent lamp ballasts (other than specialty application mercury vapor lamp ballasts)*. Except as provided in paragraphs (m)(2), (m)(3), (m)(4), (m)(5), (m)(6), (m)(7), (m)(8), (m)(9), and (m)(10) of this section, each fluorescent lamp ballast—

(i) (A) Manufactured on or after January 1, 1990;

(B) Sold by the manufacturer on or after April 1, 1990; or

(C) Incorporated into a luminaire by a luminaire manufacturer on or after April 1, 1991; and

(ii) Designed—

(A) To operate at nominal input voltages of 120 or 277 volts;

(B) To operate with an input current frequency of 60 Hertz; and

(C) For use in connection with an F40T12, F96T12, or F96T12HO lamps shall have a power factor of 0.90 or greater and shall have a ballast efficacy factor not less than the following:

Application for operation of	Ballast input voltage	Total nominal lamp watts	Ballast efficacy factor
One F40 T12 lamp	120	40	1.805
	277	40	1.805
Two F40 T12 lamps	120	80	1.060
	277	80	1.050
Two F96T12 lamps	120	150	0.570
	277	150	0.570
Two F96T12HO lamps	120	220	0.390
	277	220	0.390

(2) The standards described in paragraph (m)(1) of this section do not apply to—

(i) A ballast that is designed for dimming or for use in ambient temperatures of 0 °F or less, or

(ii) A ballast that has a power factor of less than 0.90 and is designed for use only in residential building applications.

(3) Except as provided in paragraph (m)(4) of this section, each fluorescent lamp ballast—

(i) (A) Manufactured on or after April 1, 2005;

(B) Sold by the manufacturer on or after July 1, 2005; or

(C) Incorporated into a luminaire by a luminaire manufacturer on or after April 1, 2006; and

(ii) Designed—

(A) To operate at nominal input voltages of 120 or 277 volts;

(B) To operate with an input current frequency of 60 Hertz; and

(C) For use in connection with an F40T12, F96T12, or F96T12HO lamps; shall have a power factor of 0.90 or greater and shall have a ballast efficacy factor not less than the following:

Application of operation of	Ballast input voltage	Total nominal lamp watts	Ballast efficacy factor
One F40 T12 lamp	120	40	2.29
	277	40	2.29
Two F40 T12 lamps	120	80	1.17
	277	80	1.17
Two F96T12 lamps	120	150	0.63
	277	150	0.63
Two F96T12HO lamps ..	120	220	0.39
	277	220	0.39

(4) (i) The standards described in paragraph (m)(3) do not apply to:

(A) A ballast that is designed for dimming to 50 percent or less of its maximum output;

(B) A ballast that is designed for use with two F96T12HO lamps at ambient temperatures of −20 °F or less and for use in an outdoor sign;

(C) A ballast that has a power factor of less than 0.90 and is designed and labeled for use only in residential building applications; or

(D) A replacement ballast as defined in paragraph (m)(4)(ii) of this section.

(ii) For purposes of this paragraph (m), a replacement ballast is defined as a ballast that:

(A) Is manufactured on or before June 30, 2010;

(B) Is designed for use to replace an existing ballast in a previously installed luminaire;

(C) Is marked ''FOR REPLACEMENT USE ONLY'';

(D) Is shipped by the manufacturer in packages containing not more than 10 ballasts;

(E) Has output leads that when fully extended are a total length that is less than the length of the lamp with which it is intended to be operated; and

(F) Meets or exceeds the ballast efficacy factor in the following table:

Application for operation of	Ballast input voltage	Total nominal lamp watts	Ballast efficacy factor
One F40 T12 lamp	120	40	1.805
	277	40	1.805
Two F40 T12 lamps	120	80	1.060
	277	80	1.050
Two F96T12 lamps	120	150	0.570
	277	150	0.570
Two F96T12HO lamps ..	120	220	0.390
	277	220	0.390

(5) Except as provided in paragraph (m)(7) of this section, each fluorescent lamp ballast (other than replacement ballasts defined in § 430.2)—

(i)(A) Manufactured on or after July 1, 2009;

(B) Sold by the manufacturer on or after October 1, 2009; or

(C) Incorporated into a luminaire by a luminaire manufacturer on or after July 1, 2010; and

(ii) Designed—

(A) To operate at nominal input voltages of 120 or 277 volts;

(B) To operate with an input current frequency of 60 Hertz; and

(C) For use in connection with F34T12 lamps, F96T12/ES lamps, or F96T12HO/ES lamps; shall have a power factor of 0.90 or greater and shall have a ballast efficacy factor of not less than the following:

Application for operation of	Ballast input voltage	Total nominal lamp watts	Ballast efficacy factor
One F34T12 lamp	120/277	34	2.61
Two F34T12 lamps	120/277	68	1.35
Two F96T12/ES lamps	120/277	120	0.77
Two F96T12HO/ES lamps	120/277	190	0.42

(6) The standards in paragraph (m)(5) shall apply to all ballasts covered by paragraph (m)(5)(ii), including replacement ballasts and ballasts described in

paragraph (m)(7) of this section, that are manufactured on or after July 1, 2010, or sold by the manufacturer on or after October 1, 2010.

(7) The standards in paragraph (m)(5) do not apply to—

(i) A ballast that is designed for dimming to 50 percent or less of the maximum output of the ballast;

(ii) A ballast that is designed for use with 2 F96T12HO lamps at ambient temperatures of 20 degrees F or less and for use in an outdoor sign; or

(iii) A ballast that has a power factor of less than 0.90 and is designed and labeled for use only in residential applications.

(8) Except as provided in paragraph (m)(9) of this section, each fluorescent lamp ballast—

(i) Manufactured on or after November 14, 2014;

(ii) Designed—

(A) To operate at nominal input voltages at or between 120 and 277 volts;

(B) To operate with an input current frequency of 60 Hertz; and

(C) For use in connection with fluorescent lamps (as defined in § 430.2)

(iii) Shall have—

(A) A power factor of 0.9 or greater except for those ballasts defined in paragraph (m)(8)(iii)(B) of this section;

(B) A power factor of 0.5 or greater for residential ballasts, which are defined in (m)(8)(vi) of this section;

(C) A ballast luminous efficiency not less than the following:

BLE = A/(1+B*average total lamp arc power ∧ −C) Where A, B, and C are as follows:

Description	A	B	C
Instant start and rapid start ballasts (not classified as residential) that are designed to operate 4-foot medium bipin lamps. 2-foot U-shaped lamps. 8-foot slimline lamps.	0.993	0.27	0.25
Programmed start ballasts (not classified as residential) that are designed to operate 4-foot medium bipin lamps. 2-foot U-shaped lamps. 4-foot miniature bipin standard output lamps. 4-foot miniature bipin high output lamps.	0.993	0.51	0.37
Instant start and rapid start ballasts (not classified as sign ballasts) that are designed to operate 8-foot high output lamps.	0.993	0.38	0.25
Programmed start ballasts (not classified as sign ballasts) that are designed to operate 8-foot high output lamps.	0.973	0.70	0.37
Sign ballasts that operate 8-foot high output lamps	0.993	0.47	0.25
Instant start and rapid start residential ballasts that operate 4-foot medium bipin lamps. 2-foot U-shaped lamps. 8-foot slimline lamps.	0.993	0.41	0.25
Programmed start residential ballasts that are designed to operate 4-foot medium bipin lamps. 2-foot U-shaped lamps.	0.973	0.71	0.37

(iv) Instant start, rapid start, and programmed start are defined in Appendix Q1 of subpart B of this part. Average total lamp arc power is as defined and measured in accordance with Appendix Q1 of subpart B of this part.

(v) Sign ballasts have an Underwriters Laboratories Inc. Type 2 rating and are designed, labeled, and marketed for use in outdoor signs.

(vi) Residential ballasts meet FCC consumer limits as set forth in 47 CFR part 18 and are designed and labeled for use in residential applications.

(9) The standards described in paragraph (m)(8) of this section do not apply to:

(i) A ballast that is designed for dimming to 50 percent or less of the maximum output of the ballast except for those specified in m(10); and

(ii) A low frequency ballast (as defined in Appendix Q1 to subpart of this part) that:

(A) Is designed to operate T8 diameter lamps;

(B) Is designed, labeled, and marketed for use in EMI-sensitive environments only;

(C) Is shipped by the manufacturer in packages containing 10 or fewer ballasts; and

(iii) A programmed start ballast that operates 4-foot medium bipin T8 lamps

and delivers on average less than 140 milliamperes to each lamp.

(10) Each fluorescent lamp ballast—

(i) Manufactured on or after November 14, 2014;

(ii) Designed—

(A) To operate at nominal input voltages of 120 or 277 volts;

(B) To operate with an input current frequency of 60 Hertz; and

(C) For use in connection with fluorescent lamps (as defined in § 430.2);

(D) For dimming to 50 percent or less of the maximum output of the ballast

(iii) Shall have—

(A) A power factor of 0.9 or greater except for those ballasts defined in paragraph (m)(8)(iii)(B) of this section;

(B) A power factor of 0.5 or greater for residential ballasts, which meet FCC Part B consumer limits and are designed and labeled for use only in residential applications;

(C) A ballast luminous efficiency of not less than the following:

Designed for the operation of	Ballast input voltage	Total nominal lamp watts	Ballast luminous efficiency	
			Low frequency ballasts	High frequency ballasts
One F34T12 lamp	120/277	34	0.777	0.778
Two F34T12 lamps	120/277	68	0.804	0.805
Two F96T12/ES lamps	120/277	120	0.876	0.884
Two F96T12HO/ES lamps	120/277	190	0.711	0.713

(n) *General service fluorescent lamps and incandescent reflector lamps.* (1) Except as provided in paragraphs (n)(2) and (n)(3) of this section, each of the following general service fluorescent lamps manufactured after the effective dates specified in the table shall meet or exceed the following lamp efficacy and CRI standards:

Lamp type	Nominal lamp wattage	Minimum CRI	Minimum average lamp efficacy (lm/W)	Effective date
4-foot medium bipin	>35W	69	75.0	Nov. 1, 1995.
	≤35W	45	75.0	Nov. 1, 1995.
2-foot U-shaped	>35W	69	68.0	Nov. 1, 1995.
8-foot slimline	≤35W	45	64.0	Nov. 1, 1995.
	>65W	69	80.0	May 1, 1994.
	>65W	45	80.0	May 1, 1994.
8-foot high output	>100W	69	80.0	May 1, 1994.
	≤100W	45	80.0	May 1, 1994.

(2) The standards described in paragraph (n)(1) of this section do not apply to:

(i) Any 4-foot medium bipin lamp or 2-foot U-shaped lamp with a rated wattage less than 28 watts;

(ii) Any 8-foot high output lamp not defined in ANSI C78.81 (incorporated by reference; see § 430.3) or related supplements, or not 0.800 nominal amperes; or

(iii) Any 8-foot slimline lamp not defined in ANSI C78.3 (incorporated by reference; see § 430.3).

(3) Each of the following general service fluorescent lamps manufactured after July 14, 2012, shall meet or exceed the following lamp efficacy standards shown in the table:

Lamp type	Correlated color temperature	Minimum average lamp efficacy (lm/W)
4-foot medium bipin	≤4,500K	89
	>4,500K and ≤7,000K	88
2-foot U-shaped	≤4,500K	84
	>4,500K and ≤7,000K	81

Lamp type	Correlated color temperature	Minimum average lamp efficacy (lm/W)
8-foot slimline	≤4,500K	97
	>4,500K and ≤7,000K	93
8-foot high output	≤4,500K	92
	>4,500K and ≤7,000K	88
4-foot miniature bipin standard output	≤4,500K	86
	>4,500K and ≤7,000K	81
4-foot miniature bipin high output	≤4,500K	76
	>4,500K and ≤7,000K	72

(4) Except as provided in paragraph (n)(5) of this section, each of the following incandescent reflector lamps manufactured after November 1, 1995, shall meet or exceed the lamp efficacy standards shown in the table:

Nominal lamp wattage	Minimum average lamp efficacy (lm/W)
40–50	10.5
51–66	11.0
67–85	12.5
86–115	14.0
116–155	14.5
156–205	15.0

(5) Each of the following incandescent reflector lamps manufactured after July 14, 2012, shall meet or exceed the lamp efficacy standards shown in the table:

Rated lamp wattage	Lamp spectrum	Lamp diameter (inches)	Rated voltage	Minimum average lamp efficacy (lm/W)
40–205	Standard Spectrum	>2.5	≥125V	$6.8*P^{0.27}$
			<125V	$5.9*P^{0.27}$
		≤2.5	≥125V	$5.7*P^{0.27}$
			<125V	$5.0*P^{0.27}$
40–205	Modified Spectrum	>2.5	≤125V	$5.8*P^{0.27}$
			<125V	$5.0*P^{0.27}$
		≤2.5	≥125V	$4.9*P^{0.27}$
			<125V	$4.2*P^{0.27}$

Note 1: P is equal to the rated lamp wattage, in watts.
Note 2: Standard Spectrum means any incandescent reflector lamp that does not meet the definition of modified spectrum in 430.2.

(6) (i)(A) Subject to the exclusions in paragraph (n)(6)(ii) of this section, the standards specified in this section shall apply to ER incandescent reflector lamps, BR incandescent reflector lamps, BPAR incandescent reflector lamps, and similar bulb shapes on and after January 1, 2008.

(B) Subject to the exclusions in paragraph (n)(6)(ii) of this section, the standards specified in this section shall apply to incandescent reflector lamps with a diameter of more than 2.25 inches, but not more than 2.75 inches, on and after June 15, 2008.

(ii) The standards specified in this section shall not apply to the following types of incandescent reflector lamps:

(A) Lamps rated at 50 watts or less that are ER30, BR30, BR40, or ER40 lamps;

(B) Lamps rated at 65 watts that are BR30, BR40, or ER40 lamps; or

(C) R20 incandescent reflector lamps rated 45 watts or less.

(o) *Faucets*. The maximum water use allowed for any of the following faucets manufactured after January 1, 1994, when measured at a flowing water pressure of 60 pounds per square inch (414 kilopascals), shall be as follows:

Faucet type	Maximum flow rate (gpm (L/min)) or (gal/cycle (L/cycle))
Lavatory faucets	2.2 gpm (8.3 L/min) [1] [2]

Faucet type	Maximum flow rate (gpm (L/min)) or (gal/cycle (L/cycle))
Lavatory replacement aerators.	2.2 gpm (8.3 L/min)
Kitchen faucets	2.2 gpm (8.3 L/min)
Kitchen replacement aerators.	2.2 gpm (8.3 L/min)
Metering faucets	0.25 gal/cycle (0.95 L/cycle) [3] [4]

NOTE:

[1] Sprayheads with independently-controlled orifices and manual controls.

The maximum flow rate of each orifice that manually turns on or off shall not exceed the maximum flow rate for a lavatory faucet.

[2] Sprayheads with collectively controlled orifices and manual controls.

The maximum flow rate of a sprayhead that manually turns on or off shall be the product of (a) the maximum flow rate for a lavatory faucet and (b) the number of component lavatories (rim space of the lavatory in inches (millimeters) divided by 20 inches (508 millimeters)).

[3] Sprayheads with independently controlled orifices and metered controls.

The maximum flow rate of each orifice that delivers a preset volume of water before gradually shutting itself off shall not exceed the maximum flow rate for a metering faucet.

[4] Sprayheads with collectively-controlled orifices and metered controls.

The maximum flow rate of a sprayhead that delivers a preset volume of water before gradually shutting itself off shall be the product of (a) the maximum flow rate for a metering faucet and (b) the number of component lavatories (rim space of the lavatory in inches (millimeters) divided by 20 inches (508 millimeters)).

(p) *Showerheads*. The maximum water use allowed for any showerheads manufactured after January 1, 1994, shall be 2.5 gallons per minute (9.5 liters per minute) when measured at a flowing pressure of 80 pounds per square inch gage (552 kilopascals). When used as a component of any such showerhead, the flow-restricting insert shall be mechanically retained at the point of manufacture such that a force of 8.0 pounds force (36 Newtons) or more is required to remove the flow-restricting insert, except that this requirement shall not apply to showerheads for which removal of the flow-restricting insert would cause water to leak significantly from areas other than the spray face.

(q) *Water closets*. (1) The maximum water use allowed in gallons per flush for any of the following water closets manufactured after January 1, 1994, shall be as follows:

Water closet type	Maximum flush rate (gpf (Lpf))
Gravity tank-type toilets	1.6 (6.0)
Flushometer tank toilets	1.6 (6.0)
Electromechanical hydraulic toilets	1.6 (6.0)
Blowout toilets	3.5 (13.2)

(2) The maximum water use allowed for flushometer valve toilets, other than blowout toilets, manufactured after January 1, 1997, shall be 1.6 gallons per flush (6.0 liters per flush).

(r) *Urinals*. The maximum water use allowed for any urinals manufactured after January 1, 1994, shall be 1.0 gallons per flush (3.8 liters per flush). The maximum water use allowed for a trough-type urinal shall be the product of:

(1) The maximum flow rate for a urinal and

(2) The length of the trough-type urinal in inches (millimeter) divided by 16 inches (406 millimeters).

(s) *Ceiling fans and ceiling fan light kits*. (1) All ceiling fans manufactured on or after January 1, 2007, shall have the following features:

(i) Fan speed controls separate from any lighting controls;

(ii) Adjustable speed controls (either more than 1 speed or variable speed);

(iii) The capability of reversible fan action, except for—

(A) Fans sold for industrial applications;

(B) Fans sold for outdoor applications; and

(C) Cases in which safety standards would be violated by the use of the reversible mode.

(2)(i) Ceiling fan light kits with medium screw base sockets manufactured on or after January 1, 2007, shall be packaged with screw-based lamps to fill all screw base sockets.

(ii) The screw-based lamps required under paragraph (2)(i) of this section shall—

(A) Meet the ENERGY STAR Program requirements for Compact Fluorescent Lamps, version 3; or

(B) Use light sources other than compact fluorescent lamps that have lumens per watt performance at least equivalent to comparable configured compact fluorescent lamps meeting the energy conservation standards described in paragraph (2)(ii)(A) of this section.

(3) Ceiling fan light kits with pin-based sockets for fluorescent lamps manufactured on or after January 1, 2007 shall—

(i) Meet the ENERGY STAR Program Requirements for Residential Light

Fixtures version 4.0 issued by the Environmental Protection Agency; and

(ii) Shall be packaged to include the lamps described in paragraph (s)(3)(i) of this section with the ceiling fan light kits to fill all sockets.

(4) Ceiling fan light kits with socket types other than those covered in paragraphs (2) and (3) of this section, including candelabra screw base sockets, manufactured on or after January 1, 2009—

(i) Shall not be capable of operating with lamps that total more than 190 watts; and

(ii) Shall be packaged to include the lamps described in clause (i) with the ceiling fan light kits.

(t) *Torchieres*. A torchiere manufactured on or after January 1, 2006 shall:

(1) Consume not more than 190 watts of power; and

(2) Not be capable of operating with lamps that total more than 190 watts.

(u) *Medium Base Compact Fluorescent Lamps*. A bare lamp and covered lamp (no reflector) medium base compact fluorescent lamp manufactured on or after January 1, 2006, shall meet the following requirements:

Factor	Requirements
Lamp Power (Watts) & Configuration [1]	Minimum Efficacy: lumens/watt(Based upon initial lumen data). [2]
Bare Lamp:	
Lamp Power <15	45.0.
Lamp Power ≥15	60.0.
Covered Lamp (no reflector):	
Lamp Power <15	40.0.
15≥Lamp Power <19	48.0.
19≥Lamp Power <25	50.0
Lamp Power ≥25	55.0.
1,000-hour Lumen Maintenance	The average of at least 5 lamps must be a minimum 90.0% of initial (100-hour) lumen output @ 1,000 hours of rated life.
Lumen Maintenance	80.0% of initial (100-hour) rating at 40 percent of rated life (per ANSI C78.5 Clause 4.10).
Rapid Cycle Stress Test	Per ANSI C78.5 and IESNA LM–65 (clauses 2,3,5, and 6). *Exception:* Cycle times must be 5 minutes on, 5 minutes off. Lamp will be cycled once for every two hours of rated life. At least 5 lamps *must meet or exceed* the minimum number of cycles.
Average Rated Lamp Life	≥6,000 hours as declared by the manufacturer on packaging. At 80% of rated life, statistical methods may be used to confirm lifetime claims based on sampling performance.

[1] Take performance and electrical requirements at the end of the 100-hour aging period according to ANSI Standard C78.5. The lamp efficacy shall be the average of the lesser of the lumens per watt measured in the base up and/or other specified positions. Use wattages place on packaging to select proper specification efficacy in this table, not measured wattage. Labeled wattages are for reference only.

[2] Efficacies are based on measured values for lumens and wattages from pertinent test data. Wattages and lumens placed on packages may not be used in calculation and are not governed by this specification. For multi-level or dimmable systems, measurements shall be at the highest setting. Acceptable measurement error is ±3%.

(v) *Dehumidifiers*. (1) Dehumidifiers manufactured on or after October 1, 2007, shall have an energy factor that meets or exceeds the following values:

Product capacity (pints/day)	Minimum energy factor (liters/kWh)
25.00 or less	1.00
25.01–35.00	1.20
35.01–54.00	1.30
54.01–74.99	1.50
75.00 or more	2.25

(2) Dehumidifiers manufactured on or after October 1, 2012, shall have an energy factor that meets or exceeds the following values:

Product capacity (pints/day)	Minimum energy factor (liters/kWh)
Up to 35.00	1.35
35.01–45.00	1.50
45.01–54.00	1.60
54.01–75.00	1.70
75.00 or more	2.5

(w) *Class A external power supplies*. (1)(i) Except as provided in paragraphs (w)(1)(ii) and (w)(1)(iii) of this section, all Class A external power supplies manufactured on or after July 1, 2008, shall meet the following standards:

Nameplate output	Required efficiency (decimal equivalent of a percentage)
Active Mode	
Less than 1 watt	0.5 times the Nameplate output.
From 1 watt to not more than 51 watts.	The sum of 0.09 times the Natural Logarithm of the Nameplate Output and 0.5.
Greater than 51 watts	0.85.
No-Load Mode	
Nameplate output	Maximum consumption
Not more than 250 watts	0.5 watts.

(ii) A class A external power supply shall not be subject to the standards in paragraph w(1)(i) if the class A external power supply is—

(A) Manufactured during the period beginning on July 1, 2008, and ending on June 30, 2015, and

(B) Made available by the manufacturer as a service part or a spare part for an end-use product—

(1) That constitutes the primary load; and

(2) Was manufactured before July 1, 2008.

(3) The standards described in paragraph (w)(1)(i) shall not constitute an energy conservation standard for the separate end-use product to which the external power supply is connected.

(4) Any class A external power supply manufactured on or after July 1, 2008 shall be clearly and permanently marked in accordance with the External Power Supply International Efficiency Marking Protocol, as referenced in the 'Energy Star Program Requirements for Single Voltage External Ac–Dc and Ac–Ac Power Supplies,' (incorporated by reference; see § 430.3), published by the Environmental Protection Agency.

(iii) *Non-application of no-load mode requirements.* The no-load mode energy efficiency standards established in paragraph (w)(1)(i) of this section shall not apply to an external power supply manufactured before July 1, 2017, that—

(A) Is an AC-to-AC external power supply;

(B) Has a nameplate output of 20 watts or more;

(C) Is certified to the Secretary as being designed to be connected to a security or life safety alarm or surveillance system component; and

(D) On establishment within the External Power Supply International Efficiency Marking Protocol, as referenced in the ''Energy Star Program Requirements for Single Voltage External Ac-Dc and Ac-Ac Power Supplies'' (incorporated by reference, see § 430.3), published by the Environmental Protection Agency, of a distinguishing mark for products described in this clause, is permanently marked with the distinguishing mark.

(x) *General service incandescent lamps, intermediate base incandescent lamps and candelabra base incandescent lamps.* (1) The energy conservation standards in this paragraph apply to general service incandescent lamps:

(i) Intended for a general service or general illumination application (whether incandescent or not);

(ii) Has a medium screw base or any other screw base not defined in ANSI C81.61 (incorporated by reference; see § 430.3); and

(iii) Is capable of being operated at a voltage at least partially within the range of 110 to 130 volts.

(A) General service incandescent lamps manufactured after the effective dates specified in the tables below, except as described in paragraph (x)(1)(B) of this section, shall have a color rendering index greater than or equal to 80 and shall have rated wattage no greater than and rated lifetime no less than the values shown in the table below:

GENERAL SERVICE INCANDESCENT LAMPS

Rated lumen ranges	Maximum rate wattage	Minimum rate life-time	Effective date
1490–2600	72	1,000 hrs	1/1/2012
1050–1489	53	1,000 hrs	1/1/2013
750–1049	43	1,000 hrs	1/1/2014
310–749	29	1,000 hrs	1/1/2014

(B) Modified spectrum general service incandescent lamps manufactured after the effective dates specified shall have a color rendering index greater than or equal to 75 and shall have a rated wattage no greater than and rated lifetime no less than the values shown in the table below:

MODIFIED SPECTRUM GENERAL SERVICE INCANDESCENT LAMPS

Rated lumen ranges	Maximum rate wattage	Minimum rate life-time	Effective date
1118–1950	72	1,000 hrs	1/1/2012
788–1117	53	1,000 hrs	1/1/2013
563–787	43	1,000 hrs	1/1/2014
232–562	29	1,000 hrs	1/1/2014

(2) Each candelabra base incandescent lamp shall not exceed 60 rated watts.

(3) Each intermediate base incandescent lamp shall not exceed 40 rated watts.

[54 FR 6077, Feb. 7, 1989]

EDITORIAL NOTE: For FEDERAL REGISTER citations affecting § 430.32, see the List of CFR Sections Affected, which appears in the Finding Aids section of the printed volume and at *www.fdsys.gov*.

§ 430.33 Preemption of State regulations.

(a) Any State regulation providing for any energy conservation standard, or water conservation standard (in the case of faucets, showerheads, water closets, and urinals), or other requirement with respect to the energy efficiency, energy use, or water use (in the case of faucets, showerheads, water closets, or urinals) of a covered product that is not identical to a Federal standard in effect under this subpart is preempted by that standard, except as provided for in sections 325(i)(6)(A)(vi), 327(b) and (c) of the Act.

(b) No State regulation, or revision thereof, concerning the energy efficiency, energy use, or water use of the covered product shall be effective with respect to such covered product, unless the State regulation or revision in the case of any portion of any regulation that establishes requirements for general service incandescent lamps, intermediate base incandescent lamps, or candelabra base lamps, was enacted or adopted by the State of California or Nevada before December 4, 2007, except that—

(1) The regulation adopted by the California Energy Commission with an effective date of January 1, 2008, shall only be effective until the effective date of the Federal standard for the applicable lamp category under paragraphs (A), (B), and (C) of section 325(i)(1) of EPCA; and

(2) The States of California and Nevada may, at any time, modify or adopt a State standard for general service lamps to conform with Federal standards with effective dates no earlier than 12 months prior to the Federal effective dates prescribed under paragraphs (A), (B), and (C) of section 325(i)(1) of EPCA, at which time any prior regulations adopted by the State of California or Nevada shall no longer be effective.

[63 FR 13318, Mar. 18, 1998, as amended at 74 FR 12070, Mar. 23, 2009; 78 FR 62993, Oct. 23, 2013]

§ 430.34 Energy and water conservation standards amendments

The Department of Energy may not prescribe any amended standard which increases the maximum allowable energy use or, in the case of showerheads, faucets, water closets or urinals, the maximum allowable water use, or which decreases the minimum required energy efficiency of a covered product.

[67 FR 36406, May 23, 2002]

§ 430.35 Petitions with respect to general service lamps.

(a) Any person may petition the Secretary for an exemption for a type of general service lamp from the requirements of this subpart. The Secretary may grant an exemption only to the extent that the Secretary finds, after a hearing and opportunity for public comment, that it is not technically

feasible to serve a specialized lighting application (such as a military, medical, public safety or certified historic lighting application) using a lamp that meets the requirements of this subpart. To grant an exemption for a product under this paragraph, the Secretary shall include, as an additional criterion, that the exempted product is unlikely to be used in a general service lighting application.

(b) Any person may petition the Secretary to establish standards for lamp shapes or bases that are excluded from the definition of general service lamps. The petition shall include evidence that the availability or sales of exempted lamps have increased significantly since December 19, 2007. The Secretary shall grant a petition if the Secretary finds that:

(1) The petition presents evidence that demonstrates that commercial availability or sales of exempted incandescent lamp types have increased significantly since December 19, 2007 and are being widely used in general lighting applications; and

(2) Significant energy savings could be achieved by covering exempted products, as determined by the Secretary based on sales data provided to the Secretary from manufacturers and importers.

[74 FR 12070, Mar. 23, 2009]

APPENDIX A TO SUBPART C OF PART 430—PROCEDURES, INTERPRETATIONS AND POLICIES FOR CONSIDERATION OF NEW OR REVISED ENERGY CONSERVATION STANDARDS FOR CONSUMER PRODUCTS

1. Objectives
2. Scope
3. Setting Priorities for Rulemaking Activity
4. Process for Developing Efficiency Standards and Factors to be Considered
5. Policies on Selection of Standards
6. Effective Date of a Standard
7. Test Procedures
8. Joint Stakeholder Recommendations
9. Principles for the Conduct of Engineering Analysis
10. Principles for the Analysis of Impacts on Manufacturers
11. Principles for the Analysis of Impacts on Consumers
12. Consideration of Non-Regulatory Approaches
13. Crosscutting Analytical Assumptions
14. Deviations, Revisions, and Judicial Review

1. Objectives

This appendix establishes procedures, interpretations and policies to guide the DOE in the consideration and promulgation of new or revised appliance efficiency standards under the Energy Policy and Conservation Act (EPCA). The Department's objectives in establishing these guidelines include:

(a) *Provide for early input from stakeholders.* The Department seeks to provide opportunities for public input early in the rulemaking process so that the initiation and direction of rulemakings is informed by comment from interested parties. Under the guidelines established by this appendix, DOE will seek early input from interested parties in setting rulemaking priorities and structuring the analyses for particular products. Interested parties will be invited to provide input for the selection of design options and will help DOE identify analysis, data, and modeling needs. DOE will gather input from interested parties through a variety of mechanisms, including public workshops.

(b) *Increase predictability of the rulemaking timetable.* The Department seeks to make informed, strategic decisions about how to deploy its resources on the range of possible standards development activities, and to announce these prioritization decisions so that all interested parties have a common expectation about the timing of different rulemaking activities. The guidelines in this appendix provide for setting priorities and timetables for standards development and test procedure modification and reflect these priorities in the Regulatory Agenda.

(c) *Increase use of outside technical expertise.* The Department seeks to expand its use of outside technical experts in evaluating product-specific engineering issues to ensure that decisions on technical issues are fully informed. The guidelines in this appendix provide for increased use of outside technical experts in developing, performing and reviewing the analyses. Draft analytical results will be distributed for peer and stakeholder review.

(d) *Eliminate problematic design options early in the process.* The Department seeks to eliminate from consideration, early in the process, any design options that present unacceptable problems with respect to manufacturability, consumer utility, or safety, so that the detailed analysis can focus only on viable design options. Under the guidelines in this appendix, DOE will eliminate from consideration design options if it concludes that manufacture, installation or service of the design will be impractical, or that the design option will adversely affect the utility of the product, or if the design has adverse safety or health impacts. This

screening will be done at the outset of a rulemaking.

(e) *Fully consider non-regulatory approaches.* The Department seeks to understand the effects of market forces and voluntary programs on encouraging the purchase of energy efficient products so that the incremental impacts of a new or revised standard can be accurately assessed and the Department can make informed decisions about where standards and voluntary ''market pull'' programs can be used most effectively. Under the guidelines in this appendix, DOE will solicit information on the effectiveness of market forces and non-regulatory approaches for encouraging the purchase of energy efficient products, and will carefully consider this information in assessing the benefits of standards. In addition, DOE will continue to support voluntary efforts by manufacturers, retailers, utilities and others to increase product efficiency.

(f) *Conduct thorough analysis of impacts.* In addition to understanding the aggregate costs and benefits of standards, the Department seeks to understand the distribution of those costs and benefits among consumers, manufacturers and others, and the uncertainty associated with these analyses of costs and benefits, so that any adverse impacts on significant subgroups and uncertainty concerning any adverse impacts can be fully considered in selecting a standard. Under the guidelines in this appendix, the analyses will consider the variability of impacts on significant groups of manufacturers and consumers in addition to aggregate costs and benefits, report the range of uncertainty associated with these impacts, and take into account cumulative impacts of regulation on manufacturers.

(g) *Use transparent and robust analytical methods.* The Department seeks to use qualitative and quantitative analytical methods that are fully documented for the public and that produce results that can be explained and reproduced, so that the analytical underpinnings for policy decisions on standards are as sound and well-accepted as possible. Under the guidelines in this appendix, DOE will solicit input from interested parties in identifying analysis, data, and modeling needs with respect to measurement of impacts on manufacturers and consumers.

(h) *Articulate policies to guide selection of standards.* The Department seeks to adopt policies elaborating on the statutory criteria for selecting standards, so that interested parties are aware of the policies that will guide these decisions. Under the guidelines in this appendix, policies for screening design options, selecting candidate standard levels, selecting a proposed standard level, and establishing the final standard are established.

(i) *Support efforts to build consensus on standards.* The Department seeks to encourage development of consensus proposals for new or revised standards because standards with such broad-based support are likely to balance effectively the economic, energy, and environmental interests affected by standards. Under the guidelines in this appendix, DOE will support the development and submission of consensus recommendations for standards by representative groups of interested parties to the fullest extent possible.

(j) *Reduce time and cost of developing standards.* The Department seeks to establish a clear protocol for initiating and conducting standards rulemakings in order to eliminate time-consuming and costly missteps. Under the guidelines in this appendix, increased and earlier involvement by interested parties and increased use of technical experts should minimize the need for re-analysis. This process should reduce the period between the publication of an Advance Notice of Proposed Rulemaking (ANOPR) and the publication of a final rule to not more than 18 months, and should decrease the government and private sector resources required to complete the standard development process.

2. Scope

(a) The procedures, interpretations and policies described in this appendix will be fully applicable to:

(1) Rulemakings concerning new or revised Federal energy conservation standards for consumer products initiated after August 14, 1996, and

(2) Rulemakings concerning new or revised Federal energy conservation standards for consumer products that have been initiated but for which a Notice of Proposed Rulemaking (NOPR) has not been published as of August 14, 1996.

(b) For rulemakings described in paragraph (a)(2) of this section, to the extent analytical work has already been done or public comment on an ANOPR has already been provided, such analyses and comment will be considered, as appropriate, in proceeding under the new process.

(c) With respect to incomplete rulemakings concerning new or revised Federal energy conservation standards for consumer products for which a NOPR was published prior to August 14, 1996, the Department will conduct a case-by-case review to decide whether any of the analytical or procedural steps already completed should be repeated. In any case, the approach described in this appendix will be used to the extent possible to conduct any analytical or procedural steps that have not been completed.

3. Setting Priorities for Rulemaking Activity

(a) *Priority-setting analysis and development of list of priorities.* At least once a year, the

Department will prepare an analysis of each of the factors identified in paragraph (d) of this section based on existing literature, direct communications with interested parties and other experts, and other available information. The results of this analysis will be used to develop rulemaking priorities and proposed schedules for the development and issuance of all rulemakings. The DOE analysis, priorities and proposed rulemaking schedules will be documented and distributed for review and comment.

(b) *Public review and comment.* Each year, DOE will invite public input to review and comment on the priority analysis.

(c) *Issuance of final listing of rulemaking priorities.* Each fall, the Department will issue, simultaneously with the issuance of the Administration's Regulatory Agenda, a final set of rulemaking priorities, the accompanying analysis, and the schedules for all priority rulemakings that it anticipates within the next two years.

(d) *Factors for priority-setting.* The factors to be considered by DOE in developing priorities and establishing schedules for conducting rulemakings will include:

(1) Potential energy savings.

(2) Potential economic benefits.

(3) Potential environmental or energy security benefits.

(4) Applicable deadlines for rulemakings.

(5) Incremental DOE resources required to complete rulemaking process.

(6) Other relevant regulatory actions affecting products.

(7) Stakeholder recommendations.

(8) Evidence of energy efficiency gains in the market absent new or revised standards.

(9) Status of required changes to test procedures.

(10) Other relevant factors.

4. Process for Developing Efficiency Standards and Factors to be Considered

This section describes the process to be used in developing efficiency standards and the factors to be considered in the process. The policies of the Department to guide the selection of standards and the decisions preliminary thereto are described in section 5.

(a) *Identifying and screening design options.* Once the Department has initiated a rulemaking for a specific product but before publishing an ANOPR, DOE will identify the product categories and design options to be analyzed in detail, and identify those design options eliminated from further consideration. Interested parties will be consulted to identify key issues, develop a list of design options, and to help the Department identify the expertise necessary to conduct the analysis.

(1) *Identification of issues for analysis.* The Department, in consultation with interested parties, will identify issues that will be examined in the standards development process.

(2) *Identification of experts and other interested parties for peer review.* DOE, in consultation with interested parties, will identify a group of independent experts and other interested parties who can provide expert review of the results of the engineering analysis and the subsequent impact analysis.

(3) *Identification and screening of design options.* In consultation with interested parties, the Department will develop a list of design options for consideration. Initially, the candidate design options will encompass all those technologies considered to be technologically feasible. Following the development of this initial list of design options, DOE will review each design option based on the factors described in paragraph (a)(4) of this section and the policies stated in section 5(b). The reasons for eliminating any design option at this stage of the process will be fully documented and published as part of the ANOPR. The technologically feasible design options that are not eliminated in this screening will be considered further in the Engineering Analysis described in paragraph (b) of this section.

(4) *Factors for screening of design options.* The factors for screening design options include:

(i) Technological feasibility. Technologies incorporated in commercial products or in working prototypes will be considered technologically feasible.

(ii) Practicability to manufacture, install and service. If mass production of a technology in commercial products and reliable installation and servicing of the technology could be achieved on the scale necessary to serve the relevant market at the time of the effective date of the standard, then that technology will be considered practicable to manufacture, install and service.

(iii) Adverse Impacts on Product Utility or Product Availability.

(iv) Adverse Impacts on Health or Safety.

(5) *Selection of contractors.* Using the specifications of necessary contractor expertise developed in consultation with interested parties, DOE will select appropriate contractors, subcontractors, and as necessary, expert consultants to perform the engineering analysis and the impact analysis.

(b) *Engineering analysis of design options and selection of candidate standard levels.* After design options are identified and screened, DOE will perform the engineering analysis and the benefit/cost analysis and select the candidate standard levels based on these analyses. The results of the analyses will be published in a Technical Support Document (TSD) to accompany the ANOPR.

(1) *Identification of engineering analytical methods and tools.* DOE, in consultation with outside experts, will select the specific engineering analysis tools (or multiple tools, if

necessary to address uncertainty) to be used in the analysis of the design options identified as a result of the screening analysis.

(2) *Engineering and life-cycle cost analysis of design options.* The DOE and its contractor will perform engineering and life-cycle cost analyses of the design options.

(3) *Review by expert group and stakeholders.* The results of the engineering and life-cycle cost analyses will be distributed for review by experts and interested parties. If appropriate, a public workshop will be conducted to review these results. The analyses will be revised as appropriate on the basis of this input.

(4) *New information relating to the factors used for screening design options.* If further information or analysis leads to a determination that a design option, or a combination of design options, has unacceptable impacts based on the policies stated in section 5(b), that design option or combination of design options will not be included in a candidate standard level.

(5) *Selection of candidate standard levels.* Based on the results of the engineering and life-cycle cost analysis of design options and the policies stated in section 5(c), DOE will select the candidate standard levels for further analysis.

(c) *Advance Notice of Proposed Rulemaking*—(1) *Documentation of decisions on candidate standard selection.* (i) If the screening analysis indicates that continued development of a standard is appropriate, the Department will publish an ANOPR in the FEDERAL REGISTER and will distribute a draft TSD containing the analyses performed to this point. The ANOPR will specify candidate standard levels but will not propose a particular standard. The ANOPR will also include the preliminary analysis of consumer life-cycle costs, national net present value, and energy impacts for the candidate standard levels based on the engineering analysis.

(ii) If the preliminary analysis indicates that no candidate standard level is likely to meet the criteria specified in law, that conclusion will be announced. In such cases, the Department may decide to proceed with a rulemaking that proposes not to adopt new or amended standards, or it may suspend the rulemaking and conclude that further action on such standards should be assigned a low priority under section 3.

(2) *Public comment and hearing.* There will be 75 days for public comment on the ANOPR with at least one public hearing or workshop.

(3) *Revisions based on comments.* Based on consideration of the comments received, any necessary changes to the engineering analysis or the candidate standard levels will be made.

If major changes are required at this stage, interested parties and experts will be given an opportunity to review the revised analysis.

(d) *Analysis of impacts and selection of proposed standard level.* After the ANOPR, economic analyses of the impacts of the candidate standard levels will be conducted. The Department will propose updated standards based on the results of the impact analysis.

(1) *Identification of issues for analysis.* The Department, in consultation with interested parties, will identify issues that will be examined in the impacts analysis.

(2) *Identification of analytical methods and tools.* DOE, in consultation with outside experts, will select the specific economic analysis tools (or multiple tools if necessary to address uncertainty) to be used in the analysis of the candidate standard levels.

(3) *Analysis of impacts.* DOE will conduct the analysis of the impacts of candidate standard levels including analysis of the factors described in paragraphs (d)(7)(ii)–(viii) of this section.

(4) *Review by expert group and stakeholders.* The results of the analysis of impacts will be distributed for review by experts and interested parties. If appropriate, a public workshop will be conducted to review these results. The analysis will be revised as appropriate on the basis of this input.

(5) *Efforts to develop consensus among stakeholders.* If a representative group of interested parties undertakes to develop joint recommendations to the Department on standards, DOE will consider deferring its impact analysis until these discussions are completed or until participants in the efforts indicate that they are unable to reach a timely agreement.

(6) *Selection of proposed standard level based on analysis of impacts.* On the basis of the analysis of the factors described in paragraph (d)(7) of this section and the policies stated in section 5(e), DOE will select a proposed standard level.

(7) *Factors to be considered in selecting a proposed standard.* The factors to be considered in selection of a proposed standard include:

(i) Consensus stakeholder recommendations.

(ii) Impacts on manufacturers. The analysis of manufacturer impacts will include: Estimated impacts on cash flow; assessment of impacts on manufacturers of specific categories of products and small manufacturers; assessment of impacts on manufacturers of multiple product-specific Federal regulatory requirements, including efficiency standards for other products and regulations of other agencies; and impact on manufacturing capacity, plant closures, and loss of capital investment.

(iii) Impacts on consumers. The analysis of consumer impacts will include: Estimated impacts on consumers based on national average energy prices and energy usage; assessments of impacts on subgroups of consumers

based on major regional differences in usage or energy prices and significant variations in installation costs or performance; sensitivity analyses using high and low discount rates and high and low energy price forecasts; consideration of changes to product utility and other impacts of likely concern to all or some consumers, based to the extent practicable on direct input from consumers; estimated life-cycle cost with sensitivity analysis; and consideration of the increased first cost to consumers and the time required for energy cost savings to pay back these first costs.

(iv) Impacts on competition.

(v) Impacts on utilities. The analysis of utility impacts will include estimated marginal impacts on electric and gas utility costs and revenues.

(vi) National energy, economic and employment impacts. The analysis of national energy, economic and employment impacts will include: Estimated energy savings by fuel type; estimated net present value of benefits to all consumers; and estimates of the direct and indirect impacts on employment by appliance manufacturers, relevant service industries, energy suppliers and the economy in general.

(vii) Impacts on the environment and energy security. The analysis of environmental and energy security impacts will include estimated impacts on emissions of carbon and relevant criteria pollutants, impacts on pollution control costs, and impacts on oil use.

(viii) Impacts of non-regulatory approaches. The analysis of energy savings and consumer impacts will incorporate an assessment of the impacts of market forces and existing voluntary programs in promoting product efficiency, usage and related characteristics in the absence of updated efficiency standards.

(ix) New information relating to the factors used for screening design options.

(e) *Notice of Proposed Rulemaking*—(1) *Documentation of decisions on proposed standard selection*. The Department will publish a NOPR in the FEDERAL REGISTER that proposes standard levels and explains the basis for the selection of those proposed levels, and will distribute a draft TSD documenting the analysis of impacts. As required by §325(p)(2) of EPCA, the NOPR also will describe the maximum improvement in energy efficiency or maximum reduction in energy use that is technologically feasible and, if the proposed standards would not achieve these levels, the reasons for proposing different standards.

(2) *Public comment and hearing*. There will be 75 days for public comment on the NOPR, with at least one public hearing or workshop.

(3) *Revisions to impact analyses and selection of final standard*. Based on the public comments received and the policies stated in section 5(f), DOE will review the proposed standard and impact analyses, and make modifications as necessary. If major changes to the analyses are required at this stage, interested parties and experts will be given an opportunity to review the revised analyses.

(f) *Notice of Final Rulemaking*. The Department will publish a Notice of Final Rulemaking in the FEDERAL REGISTER that promulgates standard levels and explains the basis for the selection of those standards, accompanied by a final TSD.

5. Policies on Selection of Standards.

(a) *Purpose*. (1) Section 4 describes the process that will be used to consider new or revised energy efficiency standards and lists a number of factors and analyses that will be considered at specified points in the process. Department policies co12467ncerning the selection of new or revised standards, and decisions preliminary thereto, are described in this section.

These policies are intended to elaborate on the statutory criteria provided in section 325 of the EPCA, 42 U.S.C. 6295.

(2) The policies described below are intended to provide guidance for making the determinations required by EPCA. This statement of policy is not intended to preclude consideration of any information pertinent to the statutory criteria. The Department will consider all pertinent information in determining whether a new or revised standard is consistent with the statutory criteria. Moreover, the Department will not be guided by a policy in this section if, in the particular circumstances presented, such a policy would lead to a result inconsistent with the criteria in section 325 of EPCA.

(b) *Screening design options*. Section 4(a)(4) lists factors to be considered in screening design options. These factors will be considered as follows in determining whether a design option will receive any further consideration:

(1) *Technological feasibility*. Technologies that are not incorporated in commercial products or in working prototypes will not be considered further.

(2) *Practicability to manufacture, install and service*. If it is determined that mass production of a technology in commercial products and reliable installation and servicing of the technology could not be achieved on the scale necessary to serve the relevant market at the time of the effective date of the standard, then that technology will not be considered further.

(3) *Impacts on product utility to consumers*. If a technology is determined to have significant adverse impact on the utility of the product to significant subgroups of consumers, or result in the unavailability of any covered product type with performance characteristics (including reliability), features, sizes, capacities, and volumes that are substantially the same as products generally

available in the U.S. at the time, it will not be considered further.

(4) *Safety of technologies.* If it is determined that a technology will have significant adverse impacts on health or safety, it will not be considered further.

(c) *Identification of candidate standard levels.* Based on the results of the engineering and cost and benefit analyses of design options, DOE will identify the candidate standard levels for further analysis. Candidate standard levels will be selected as follows:

(1) *Costs and savings of design options.* Design options which have payback periods that exceed the average life of the product or which cause life-cycle cost increases relative to the base case, using typical fuel costs, usage and discount rates, will not be used as the basis for candidate standard levels.

(2) *Further information on factors used for screening design options.* If further information or analysis leads to a determination that a design option, or a combination of design options, has unacceptable impacts under the policies stated in paragraph (b) of this section, that design option or combination of design options will not be included in a candidate standard level.

(3) *Selection of candidate standard levels.* Candidate standard levels, which will be identified in the ANOPR and on which impact analyses will be conducted, will be based on the remaining design options.

(i) The range of candidate standard levels will typically include:

(A) The most energy efficient combination of design options;

(B) The combination of design options with the lowest life-cycle cost; and

(C) A combination of design options with a payback period of not more than three years.

(ii) Candidate standard levels that incorporate noteworthy technologies or fill in large gaps between efficiency levels of other candidate standard levels also may be selected.

(d) *Advance notice of proposed rulemaking.* New information provided in public comments on the ANOPR will be considered to determine whether any changes to the candidate standard levels are needed before proceeding to the analysis of impacts. This review, and any appropriate adjustments, will be based on the policies in paragraph (c) of this section.

(e) *Selection of proposed standard.* Based on the results of the analysis of impacts, DOE will select a standard level to be proposed for public comment in the NOPR. Section 4(d)(7) lists the factors to be considered in selecting a proposed standard level. Section 325(o)(2)(A) of EPCA provides that any new or revised standard must be designed to achieve the maximum improvement in energy efficiency that is determined to be technologically feasible and economically justified.

(1) *Statutory policies.* The fundamental policies concerning selection of standards are established in the EPCA, including the following:

(i) A candidate standard level will not be proposed or promulgated if the Department determines that it is not technologically feasible and economically justified. See EPCA section 325(o)(3)(B). A standard level is economically justified if the benefits exceed the burdens. See EPCA section 325(o)(2)(B)(i). A standard level is rebuttably presumed to be economically justified if the payback period is three years or less. See EPCA section 325(o)(2)(B)(iii).

(ii) If the Department determines that a standard level is likely to result in the unavailability of any covered product type with performance characteristics (including reliability), features, sizes, capacities, and volumes that are substantially the same as products generally available in the U.S. at the time, that standard level will not be proposed. See EPCA section 325(o)(4).

(iii) If the Department determines that a standard level would not result in significant conservation of energy, that standard level will not be proposed. See EPCA section 325(o)(3)(B).

(2) *Selection of proposed standard on the basis of consensus stakeholder recommendations.* Development of consensus proposals for new or revised standards is an effective mechanism for balancing the economic, energy, and environmental interests affected by standards. Thus, notwithstanding any other policy on selection of proposed standards, a consensus recommendation on an updated efficiency level submitted by a group that represents all interested parties will be proposed by the Department if it is determined to meet the statutory criteria.

(3) *Considerations in assessing economic justification.*

(i) The following policies will guide the application of the economic justification criterion in selecting a proposed standard:

(A) If the Department determines that a candidate standard level would result in a negative return on investment for the industry, would significantly reduce the value of the industry, or would cause significant adverse impacts to a significant subgroup of manufacturers (including small manufacturing businesses), that standard level will be presumed not to be economically justified unless the Department determines that specifically identified expected benefits of the standard would outweigh this and any other expected adverse effects.

(B) If the Department determines that a candidate standard level would be the direct cause of plant closures, significant losses in domestic manufacturer employment, or significant losses of capital investment by domestic manufacturers, that standard level

will be presumed not to be economically justified unless the Department determines that specifically identified expected benefits of the standard would outweigh this and any other expected adverse effects.

(C) If the Department determines that a candidate standard level would have a significant adverse impact on the environment or energy security, that standard level will be presumed not to be economically justified unless the Department determines that specifically identified expected benefits of the standard would outweigh this and any other expected adverse effects.

(D) If the Department determines that a candidate standard level would not result in significant energy conservation relative to non-regulatory approaches, that standard level will be presumed not to be economically justified unless the Department determines that other specifically identified expected benefits of the standard would outweigh the expected adverse effects.

(E) If the Department determines that a candidate standard level is not consistent with the policies relating to practicability to manufacture, consumer utility, or safety in paragraphs (b) (2), (3) and (4) of this section, that standard level will be presumed not to be economically justified unless the Department determines that specifically identified expected benefits of the standard would outweigh this and any other expected adverse effects.

(F) If the Department determines that a candidate standard level is not consistent with the policies relating to consumer costs in paragraph (c)(1) of this section, that standard level will be presumed not to be economically justified unless the Department determines that specifically identified expected benefits of the standard would outweigh this and any other expected adverse effects.

(G) If the Department determines that a candidate standard level will have significant adverse impacts on a significant subgroup of consumers (including low-income consumers), that standard level will be presumed not to be economically justified unless the Department determines that specifically identified expected benefits of the standard would outweigh this and any other expected adverse effects.

(H) If the Department or the Department of Justice determines that a candidate standard level would have significant anticompetitive effects, that standard level will be presumed not to be economically justified unless the Department determines that specifically identified expected benefits of the standard would outweigh this and any other expected adverse effects.

(ii) The basis for a determination that triggers any presumption in paragraph (e)(3)(i) of this section and the basis for a determination that an applicable presumption has been rebutted will be supported by substantial evidence in the record and the evidence and rationale for making these determinations will be explained in the NOPR.

(iii) If none of the policies in paragraph (e)(3)(i) of this section is found to be dispositive, the Department will determine whether the benefits of a candidate standard level exceed the burdens considering all the pertinent information in the record.

(f) *Selection of a final standard.* New information provided in the public comments on the NOPR and any analysis by the Department of Justice concerning impacts on competition of the proposed standard will be considered to determine whether any change to the proposed standard level is needed before proceeding to the final rule. The same policies used to select the proposed standard level, as described in section 5(e) above, will be used to guide the selection of the final standard level.

6. Effective Date of a Standard

The effective date for new or revised standards will be established so that the period between the publication of the final rule and the effective date is not less than any period between the dates for publication and effective date provided for in EPCA. The effective date of any revised standard will be established so that the period between the effective date of the prior standard and the effective date of such revised standard is not less than period between the two effective dates provided for in EPCA.

7. Test Procedures

(a) *Identifying the need to modify test procedures.* DOE, in consultation with interested parties, experts, and the National Institute of Standards and Technology, will attempt to identify any necessary modifications to established test procedures when initiating the standards development process.

(b) *Developing and proposing revised test procedures.* Needed modifications to test procedures will be identified in consultation with experts and interested parties early in the screening stage of the standards development process. Any necessary modifications will be proposed before issuance of an ANOPR in the standards development process.

(c) *Issuing final test procedure modification.* Final, modified test procedures will be issued prior to the NOPR on proposed standards.

(d) *Effective date of modified test procedures.* If required only for the evaluation and issuance of updated efficiency standards, modified test procedures typically will not go into effect until the effective date of updated standards.

8. Joint Stakeholder Recommendations

(a) *Joint recommendations.* Consensus recommendations, and supporting analyses, submitted by a representative group of interested parties will be given substantial weight by DOE in the development of a proposed rule. See section 5(e)(2). If the supporting analyses provided by the group addresses all of the statutory criteria and uses valid economic assumptions and analytical methods, DOE expects to use this supporting analyses as the basis of a proposed rule. The proposed rule will explain any deviations from the consensus recommendations from interested parties.

(b) *Breadth of participation.* Joint recommendations will be of most value to the Department if the participants are reasonably representative of those interested in the outcome of the standards development process, including manufacturers, consumers, utilities, states and representatives of environmental or energy efficiency interest groups.

(c) *DOE support of consensus development, including impact analyses.* In order to facilitate such consensus development, DOE will make available, upon request, appropriate technical and legal support to the group and will provide copies of all relevant public documents and analyses. The Department also will consider any requests for its active participation in such discussions, recognizing that the procedural requirements of the Federal Advisory Committee Act may apply to such participation.

9. Principles for the Conduct of Engineering Analysis

(a) The purpose of the engineering analysis is to develop the relationship between efficiency and cost of the subject product. The Department will use the most appropriate means available to determine the efficiency/cost relationship, including an overall system approach or engineering modeling to predict the improvement in efficiency that can be expected from individual design options as discussed in the paragraphs below. From this efficiency/cost relationship, measures such as payback, life cycle cost, and energy savings can be developed. The Department, in consultation with interested parties, will identify issues that will be examined in the engineering analysis and the types of specialized expertise that may be required. With these specifications, DOE will select appropriate contractors, subcontractors, and expert consultants, as necessary, to perform the engineering analysis and the impact analysis. Also, the Department will consider data, information and analyses received from interested parties for use in the analysis wherever feasible.

(b) The engineering analysis begins with the list of design options developed in consultation with the interested parties as a result of the screening process. In consultation with the technology/industry expert peer review group, the Department will establish the likely cost and performance improvement of each design option. Ranges and uncertainties of cost and performance will be established, although efforts will be made to minimize uncertainties by using measures such as test data or component or material supplier information where available. Estimated uncertainties will be carried forward in subsequent analyses. The use of quantitative models will be supplemented by qualitative assessments as appropriate.

(c) The next step includes identifying, modifying or developing any engineering models necessary to predict the efficiency impact of any one or combination of design options on the product. A base case configuration or starting point will be established as well as the order and combination/blending of the design options to be evaluated. The DOE, utilizing expert consultants, will then perform the engineering analysis and develop the cost efficiency curve for the product. The cost efficiency curve and any necessary models will be subject to peer review before being issued with the ANOPR.

10. Principles for the Analysis of Impacts on Manufacturers

(a) *Purpose.* The purpose of the manufacturer analysis is to identify the likely impacts of efficiency standards on manufacturers. The Department will analyze the impact of standards on manufacturers with substantial input from manufacturers and other interested parties. The use of quantitative models will be supplemented by qualitative assessments by industry experts. This section describes the principles that will be used in conducting future manufacturing impact analysis.

(b) *Issue identification.* In the impact analysis stage (section 4(d)), the Department, in consultation with interested parties, will identify issues that will require greater consideration in the detailed manufacturer impact analysis. Possible issues may include identification of specific types or groups of manufacturers and concerns over access to technology. Specialized contractor expertise, empirical data requirements, and analytical tools required to perform the manufacturer impact analysis also would be identified at this stage.

(c) *Industry characterization.* Prior to initiating detailed impact studies, the Department will seek input on the present and past industry structure and market characteristics. Input on the following issues will be sought:

(1) Manufacturers and their relative market shares;

(2) Manufacturer characteristics, such as whether manufacturers make a full line of models or serve a niche market;

(3) Trends in the number of manufacturers;

(4) Financial situation of manufacturers;

(5) Trends in product characteristics and retail markets; and

(6) Identification of other relevant regulatory actions and a description of the nature and timing of any likely impacts.

(d) *Cost impacts on manufacturers*. The costs of labor, material, engineering, tooling, and capital are difficult to estimate, manufacturer-specific, and usually proprietary. The Department will seek input from interested parties on the treatment of cost issues. Manufacturers will be encouraged to offer suggestions as to possible sources of data and appropriate data collection methodologies. Costing issues to be addressed include:

(1) Estimates of total cost impacts, including product-specific costs (based on cost impacts estimated for the engineering analysis) and front-end investment/conversion costs for the full range of product models.

(2) Range of uncertainties in estimates of average cost, considering alternative designs and technologies which may vary cost impacts and changes in costs of material, labor and other inputs which may vary costs.

(3) Variable cost impacts on particular types of manufacturers, considering factors such as atypical sunk costs or characteristics of specific models which may increase or decrease costs.

(e) *Impacts on product sales, features, prices and cost recovery*. In order to make manufacturer cash flow calculations, it is necessary to predict the number of products sold and their sale price. This requires an assessment of the likely impacts of price changes on the number of products sold and on typical features of models sold. Past analyses have relied on price and shipment data generated by economic models. The Department will develop additional estimates of prices and shipments by drawing on multiple sources of data and experience including: actual shipment and pricing experience, data from manufacturers, retailers and other market experts, financial models, and sensitivity analyses. The possible impacts of candidate standard levels on consumer choices among competing fuels will be explicitly considered where relevant.

(f) *Measures of impact*. The manufacturer impact analysis will estimate the impacts of candidate standard levels on the net cash flow of manufacturers. Computations will be performed for the industry as a whole and for typical and atypical manufacturers. The exact nature and the process by which the analysis will be conducted will be determined by DOE, in conjunction with interested parties. Impacts to be analyzed include:

(1) Industry net present value, with sensitivity analyses based on uncertainty of costs, sales prices and sales volumes;

(2) Cash flows, by year;

(3) Other measures of impact, such as revenue, net income and return on equity, as appropriate;

The characteristics of atypical manufacturers worthy of special consideration will be determined in consultation with manufacturers and other interested parties and may include: manufacturers incurring higher or lower than average costs; and manufacturers experiencing greater or fewer adverse impacts on sales. Alternative scenarios based on other methods of estimating cost or sales impacts also will be performed, as needed.

(g) *Cumulative impacts of other Federal regulatory actions*. (1) The Department will recognize and seek to mitigate the overlapping effects on manufacturers of new or revised DOE standards and other regulatory actions affecting the same products. DOE will analyze and consider the impact on manufacturers of multiple product-specific regulatory actions. These factors will be considered in setting rulemaking priorities, assessing manufacturer impacts of a particular standard, and establishing the effective date for a new or revised standard. In particular, DOE will seek to propose effective dates for new or revised standards that are appropriately coordinated with other regulatory actions to mitigate any cumulative burden.

(2) If the Department determines that a proposed standard would impose a significant impact on product manufacturers within three years of the effective date of another DOE standard that imposes significant impacts on the same manufacturers (or divisions thereof, as appropriate), the Department will, in addition to evaluating the impact on manufacturers of the proposed standard, assess the joint impacts of both standards on manufacturers.

(3) If the Department is directed to establish or revise standards for products that are components of other products subject to standards, the Department will consider the interaction between such standards in setting rulemaking priorities and assessing manufacturer impacts of a particular standard. The Department will assess, as part of the engineering and impact analyses, the cost of components subject to efficiency standards.

(h) *Summary of quantitative and qualitative assessments*. The summary of quantitative and qualitative assessments will contain a description and discussion of uncertainties. Alternative estimates of impacts, resulting from the different potential scenarios developed throughout the analysis, will be explicitly presented in the final analysis results.

(i) *Key modeling and analytical tools*. In its assessment of the likely impacts of standards on manufacturers, the Department will

use models which are clear and understandable, feature accessible calculations, and have assumptions that are clearly explained. As a starting point, the Department will use the Government Regulatory Impact Model (GRIM). The Department will consider any enhancements to the GRIM that are suggested by interested parties. If changes are made to the GRIM methodology, DOE will provide notice and seek public input. The Department will also support the development of economic models for price and volume forecasting. Research required to update key economic data will be considered.

11. Principles for the Analysis of Impacts on Consumers

(a) *Early consideration of impacts on consumer utility*. The Department will consider at the earliest stages of the development of a standard whether particular design options will lessen the utility of the covered products to the consumer. See section 4(a).

(b) *Impacts on product availability*. The Department will determine, based on consideration of information submitted during the standard development process, whether a proposed standard is likely to result in the unavailability of any covered product type with performance characteristics (including reliability), features, sizes, capacities, and volumes that are substantially the same as products generally available in the U.S. at the time. DOE will not promulgate a standard if it concludes that it would result in such unavailability.

(c) *Department of justice review*. As required by law, the Department will solicit the views of the Justice Department on any lessening of competition that is likely to result from the imposition of a proposed standard and will give the views provided full consideration in assessing economic justification of a proposed standard. In addition, DOE may consult with the Department of Justice at earlier stages in the standards development process to seek to obtain preliminary views on competitive impacts.

(d) *Variation in consumer impacts*. The Department will use regional analysis and sensitivity analysis tools, as appropriate, to evaluate the potential distribution of impacts of candidate standards levels among different subgroups of consumers. The Department will consider impacts on significant segments of consumers in determining standards levels. Where there are significant negative impacts on identifiable subgroups, DOE will consider the efficacy of voluntary approaches as a means to achieve potential energy savings.

(e) *Payback period and first cost*. (1) In the assessment of consumer impacts of standards, the Department will consider Life-Cycle Cost, Payback Period and Cost of Conserved Energy to evaluate the savings in operating expenses relative to increases in purchase price. The Department intends to increase the level of sensitivity analysis and scenario analysis for future rulemakings. The results of these analyses will be carried throughout the analysis and the ensuing uncertainty described.

(2) If, in the analysis of consumer impacts, the Department determines that a candidate standard level would result in a substantial increase in the product first costs to consumers or would not pay back such additional first costs through energy cost savings in less than three years, Department will specifically assess the likely impacts of such a standard on low-income households, product sales and fuel switching.

12. Consideration of Non-Regulatory Approaches

(a) The Department recognizes that voluntary or other non-regulatory efforts by manufacturers, utilities and other interested parties can result in substantial efficiency improvements. The Department intends to consider fully the likely effects of non-regulatory initiatives on product energy use, consumer utility and life cycle costs, manufacturers, competition, utilities and the environment, as well as the distribution of these impacts among different regions, consumers, manufacturers and utilities. DOE will attempt to base its assessment on the actual impacts of such initiatives to date, but also will consider information presented regarding the impacts that any existing initiative might have in the future. Such information is likely to include a demonstration of the strong commitment of manufacturers, distribution channels, utilities or others to such voluntary efficiency improvements. This information will be used in assessing the likely incremental impacts of establishing or revising standards, in assessing appropriate effective dates for new or revised standards and in considering DOE support of non-regulatory initiatives.

(b) DOE believes that non-regulatory approaches are valuable complements to the standards program. In particular, DOE will consider pursuing voluntary programs where it appears that highly efficient products can obtain a significant market share but less efficient products cannot be eliminated altogether because, for instance, of unacceptable adverse impacts on a significant subgroup of consumers. In making this assessment, the Department will consider the success more efficient designs have had in the market, their acceptance to date, and their potential market penetration.

13. Crosscutting Analytical Assumptions

In selecting values for certain crosscutting analytical assumptions, DOE expects to continue relying upon the following sources and general principles:

(a) *Underlying economic assumptions.* The appliance standards analyses will generally use the same economic growth and development assumptions that underlie the most current Annual Energy Outlook (AEO) published by the Energy Information Administration (EIA).

(b) *Energy price and demand trends.* Analyses of the likely impact of appliance standards on typical users will generally adopt the mid-range energy price and demand scenario of the EIA's most current AEO. The sensitivity of such estimated impacts to possible variations in future energy prices are likely to be examined using the EIA's high and low energy price scenarios.

(c) *Product-specific energy-efficiency trends, without updated standards.* Product specific energy-efficiency trends will be based on a combination of the efficiency trends forecast by the EIA's residential and commercial demand model of the National Energy Modeling System (NEMS) and product-specific assessments by DOE and its contractors with input from interested parties.

(d) *Discount rates.* For residential and commercial consumers, ranges of three different real discount rates will be used. For residential consumers, the mid-range discount rate will represent DOE's approximation of the average financing cost (or opportunity costs of reduced savings) experienced by typical consumers. Sensitivity analyses will be performed using discount rates reflecting the costs more likely to be experienced by residential consumers with little or no savings and credit card financing and consumers with substantial savings. For commercial users, a mid-range discount rate reflecting the DOE's approximation of the average real rate of return on commercial investment will be used, with sensitivity analyses being performed using values indicative of the range of real rates of return likely to be experienced by typical commercial businesses. For national net present value calculations, DOE would use the Administration's approximation of the average real rate of return on private investment in the U.S. economy. For manufacturer impacts, DOE plans to use a range of real discount rates which are representative of the real rates of return experienced by typical U.S. manufacturers affected by the program.

(e) *Environmental impacts.* The emission rates of carbon, sulfur oxides and nitrogen oxides used by DOE to calculate the physical quantities of emissions likely to be avoided by candidate standard levels will be based on the current average carbon emissions of the U.S. electric utilities and on the projected rates of emissions of sulfur and nitrogen oxides. Projected rates of emissions, if available, will be used for the estimation of any other environmental impacts. The Department will consider the effects of the proposed standards on these emissions in reaching a decision about whether the benefits of the proposed standards exceed their burdens but will not determine the monetary value of these environmental externalities.

14. Deviations, Revisions, and Judicial Review

(a) *Deviations.* This appendix specifies procedures, interpretations and policies for the development of new or revised energy efficiency standards in considerable detail. As the approach described in this appendix is applied to the development of particular standards, the Department may find it necessary or appropriate to deviate from these procedures, interpretations or policies. If the Department concludes that such deviations are necessary or appropriate in a particular situation, DOE will provide interested parties with notice of the deviation and an explanation.

(b) *Revisions.* If the Department concludes that changes to the procedures, interpretations or policies in this appendix are necessary or appropriate, DOE will provide notice in the FEDERAL REGISTER of modifications to this appendix with an accompanying explanation. DOE expects to consult with interested parties prior to any such modification.

(c) *Judicial review.* The procedures, interpretations, and policies stated in this appendix are not intended to establish any new cause of action or right to judicial review.

[61 FR 36981, July 15, 1996]

Subpart D—Petitions To Exempt State Regulation From Preemption; Petitions To Withdraw Exemption of State Regulation

SOURCE: 54 FR 6078, Feb. 7, 1989, unless otherwise noted.

§ 430.40 Purpose and scope.

(a) This subpart prescribes the procedures to be followed in connection with petitions requesting a rule that a State regulation prescribing an energy conservation standard, water conservation standard (in the case of faucets, showerheads, water closets, and urinals), or other requirement respecting energy efficiency, energy use, or water use (in the case of faucets, showerheads, water closets, and urinals) of a type (or class) of covered product not be preempted.

(b) This subpart also prescribes the procedures to be followed in connection

with petitions to withdraw a rule exempting a State regulation prescribing an energy conservation standard, water conservation standard (in the case of faucets, showerheads, water closets, and urinals), or other requirement respecting energy efficiency, energy use, or water use (in the case of faucets, showerheads, water closets, and urinals) of a type (or class) of covered product.

[63 FR 13318, Mar. 18, 1998]

§ 430.41 Prescriptions of a rule.

(a) *Criteria for exemption from preemption.* Upon petition by a State which has prescribed an energy conservation standard, water conservation standard (in the case of faucets, showerheads, water closets, and urinals), or other requirement for a type or class of covered equipment for which a Federal energy conservation standard or water conservation standard is applicable, the Secretary shall prescribe a rule that such standard not be preempted if he determines that the State has established by a preponderance of evidence that such requirement is needed to meet unusual and compelling State or local energy interests or water interests. For the purposes of this section, the term ''unusual and compelling State or local energy interests or water interests'' means interests which are substantially different in nature or magnitude than those prevailing in the U.S. generally, and are such that when evaluated within the context of the State's energy plan and forecast, or water plan and forecast the costs, benefits, burdens, and reliability of energy savings or water savings resulting from the State regulation make such regulation preferable or necessary when measured against the costs, benefits, burdens, and reliability of alternative approaches to energy savings or water savings or production, including reliance on reasonably predictable market-induced improvements in efficiency of all equipment subject to the State regulation. The Secretary may not prescribe such a rule if he finds that interested persons have established, by a preponderance of the evidence, that the State's regulation will significantly burden manufacturing, marketing, distribution, sale or servicing of the covered equipment on a national basis. In determining whether to make such a finding, the Secretary shall evaluate all relevant factors including: the extent to which the State regulation will increase manufacturing or distribution costs of manufacturers, distributors, and others; the extent to which the State regulation will disadvantage smaller manufacturers, distributors, or dealers or lessen competition in the sale of the covered product in the State; the extent to which the State regulation would cause a burden to manufacturers to redesign and produce the covered product type (or class), taking into consideration the extent to which the regulation would result in a reduction in the current models, or in the projected availability of models, that could be shipped on the effective date of the regulation to the State and within the U.S., or in the current or projected sales volume of the covered product type (or class) in the State and the U.S.; and the extent to which the State regulation is likely to contribute significantly to a proliferation of State appliance efficiency requirements and the cumulative impact such requirements would have. The Secretary may not prescribe such a rule if he finds that such a rule will result in the unavailability in the State of any covered product (or class) of performance characteristics (including reliability), features, sizes, capacities, and volumes that are substantially the same as those generally available in the State at the time of the Secretary's finding. The failure of some classes (or types) to meet this criterion shall not affect the Secretary's determination of whether to prescribe a rule for other classes (or types).

(1) *Requirements of petition for exemption from preemption.* A petition from a State for a rule for exemption from preemption shall include the information listed in paragraphs (a)(1)(i) through (a)(1)(vi) of this section. A petition for a rule and correspondence relating to such petition shall be available for public review except for confidential or proprietary information

submitted in accordance with the Department of Energy's Freedom of Information Regulations set forth in 10 CFR part 1004:

(i) The name, address, and telephone number of the petitioner;

(ii) A copy of the State standard for which a rule exempting such standard is sought;

(iii) A copy of the State's energy plan or water plan and forecast;

(iv) Specification of each type or class of covered product for which a rule exempting a standard is sought;

(v) Other information, if any, believed to be pertinent by the petitioner; and

(vi) Such other information as the Secretary may require.

(2) [Reserved]

(b) *Criteria for exemption from preemption when energy emergency conditions or water emergency conditions (in the case of faucets, showerheads, water closets, and urinals) exist within State.* Upon petition by a State which has prescribed an energy conservation standard or water conservation standard (in the case of faucets, showerheads, water closets, and urinals) or other requirement for a type or class of covered product for which a Federal energy conservation standard or water conservation standard is applicable, the Secretary may prescribe a rule, effective upon publication in the FEDERAL REGISTER, that such State regulation not be preempted if he determines that in addition to meeting the requirements of paragraph (a) of this section the State has established that: an energy emergency condition or water emergency condition exists within the State that imperils the health, safety, and welfare of its residents because of the inability of the State or utilities within the State to provide adequate quantities of gas, electric energy, or water to its residents at less than prohibitive costs; and cannot be substantially alleviated by the importation of energy or water or the use of interconnection agreements; and the State regulation is necessary to alleviate substantially such condition.

(1) *Requirements of petition for exemption from preemption when energy emergency conditions or water emergency conditions (in the case of faucets, showerheads, water closets, and urinals) exist within a State.* A petition from a State for a rule for exemption from preemption when energy emergency conditions or water emergency conditions exist within a State shall include the information listed in paragraphs (a)(1)(i) through (a)(1)(vi) of this section. A petition shall also include the information prescribed in paragraphs (b)(1)(i) through (b)(1)(iv) of this section, and shall be available for public review except for confidential or proprietary information submitted in accordance with the Department of Energy's Freedom of Information Regulations set forth in 10 CFR part 1004:

(i) A description of the energy emergency condition or water emergency condition (in the case of faucets, showerheads, water closets, and urinals) which exists within the State, including causes and impacts.

(ii) A description of emergency response actions taken by the State and utilities within the State to alleviate the emergency condition;

(iii) An analysis of why the emergency condition cannot be alleviated substantially by importation of energy or water or the use of interconnection agreements; and

(iv) An analysis of how the State standard can alleviate substantially such emergency condition.

(2) [Reserved]

(c) *Criteria for withdrawal of a rule exempting a State standard.* Any person subject to a State standard which, by rule, has been exempted from Federal preemption and which prescribes an energy conservation standard or water conservation standard (in the case of faucets, showerheads, water closets, and urinals) or other requirement for a type or class of a covered product, when the Federal energy conservation standard or water conservation standard (in the case of faucets, showerheads, water closets, and urinals) for such product subsequently is amended, may petition the Secretary requesting that the exemption rule be withdrawn. The Secretary shall consider such petition in accordance with the requirements of paragraph (a) of this section, except that the burden

shall be on the petitioner to demonstrate that the exemption rule received by the State should be withdrawn as a result of the amendment to the Federal standard. The Secretary shall withdraw such rule if he determines that the petitioner has shown the rule should be withdrawn.

(1) *Requirements of petition to withdraw a rule exempting a State standard.* A petition for a rule to withdraw a rule exempting a State standard shall include the information prescribed in paragraphs (c)(1)(i) through (c)(1)(vii) of this section, and shall be available for public review, except for confidential or proprietary information submitted in accordance with the Department of Energy's Freedom of Information Regulations set forth in 10 CFR part 1004:

(i) The name, address and telephone number of the petitioner;

(ii) A statement of the interest of the petitioner for which a rule withdrawing an exemption is sought;

(iii) A copy of the State standard for which a rule withdrawing an exemption is sought;

(iv) Specification of each type or class of covered product for which a rule withdrawing an exemption is sought;

(v) A discussion of the factors contained in paragraph (a) of this section;

(vi) Such other information, if any, believed to be pertinent by the petitioner; and

(vii) Such other information as the Secretary may require.

(2) [Reserved]

[63 FR 13318, Mar. 18, 1998]

§ 430.42 Filing requirements.

(a) *Service.* All documents required to be served under this subpart shall, if mailed, be served by first class mail. Service upon a person's duly authorized representative shall constitute service upon that person.

(b) *Obligation to supply information.* A person or State submitting a petition is under a continuing obligation to provide any new or newly discovered information relevant to that petition. Such information includes, but is not limited to, information regarding any other petition or request for action subsequently submitted by that person or State.

(c) *The same or related matters.* A person or State submitting a petition or other request for action shall state whether to the best knowledge of that petitioner the same or related issue, act, or transaction has been or presently is being considered or investigated by any State agency, department, or instrumentality.

(d) *Computation of time.* (1) Computing any period of time prescribed by or allowed under this subpart, the day of the action from which the designated period of time begins to run is not to be included. If the last day of the period is Saturday, or Sunday, or Federal legal holiday, the period runs until the end of the next day that is neither a Saturday, or Sunday or Federal legal holiday.

(2) Saturdays, Sundays, and intervening Federal legal holidays shall be excluded from the computation of time when the period of time allowed or prescribed is 7 days or less.

(3) When a submission is required to be made within a prescribed time, DOE may grant an extension of time upon good cause shown.

(4) Documents received after regular business hours are deemed to have been submitted on the next regular business day. Regular business hours for the DOE's National Office, Washington, DC, are 8:30 a.m. to 4:30 p.m.

(5) DOE reserves the right to refuse to accept, and not to consider, untimely submissions.

(e) *Filing of petitions.* (1) A petition for a rule shall be submitted in triplicate to: The Assistant Secretary for Conservation and Renewable Energy, U.S. Department of Energy, Section 327 Petitions, Appliance Efficiency Standards, Forrestal Building, 1000 Independence Avenue, SW., Washington, DC 20585.

(2) A petition may be submitted on behalf of more than one person. A joint petition shall indicate each person participating in the submission. A joint petition shall provide the information required by § 430.41 for each person on whose behalf the petition is submitted.

(3) All petitions shall be signed by the person(s) submitting the petition or by a duly authorized representative.

If submitted by a duly authorized representative, the petition shall certify this authorization.

(4) A petition for a rule to withdraw a rule exempting a State regulation, all supporting documents, and all future submissions shall be served on each State agency, department, or instrumentality whose regulation the petitioner seeks to supersede. The petition shall contain a certification of this service which states the name and mailing address of the served parties, and the date of service.

(f) *Acceptance for filing.* (1) Within fifteen (15) days of the receipt of a petition, the Secretary will either accept it for filing or reject it, and the petitioner will be so notified in writing. The Secretary will serve a copy of this notification on each other party served by the petitioner. Only such petitions which conform to the requirements of this subpart and which contain sufficient information for the purposes of a substantive decision will be accepted for filing. Petitions which do not so conform will be rejected and an explanation provided to petitioner in writing.

(2) For purposes of the Act and this subpart, a petition is deemed to be filed on the date it is accepted for filing.

(g) *Docket.* A petition accepted for filing will be assigned an appropriate docket designation. Petitioner shall use the docket designation in all subsequent submissions.

§ 430.43 Notice of petition.

(a) Promptly after receipt of a petition and its acceptance for filing, notice of such petition shall be published in the FEDERAL REGISTER. The notice shall set forth the availability for public review of all data and information available, and shall solicit comments, data and information with respect to the determination on the petition. Except as may otherwise be specified, the period for public comment shall be 60 days after the notice appears in the FEDERAL REGISTER.

(b) In addition to the material required under paragraph (a) of this section, each notice shall contain a summary of the State regulation at issue and the petitioner's reasons for the rule sought.

§ 430.44 Consolidation.

DOE may consolidate any or all matters at issue in two or more proceedings docketed where there exist common parties, common questions of fact and law, and where such consolidation would expedite or simplify consideration of the issues. Consolidation shall not affect the right of any party to raise issues that could have been raised if consolidation had not occurred.

§ 430.45 Hearing.

The Secretary may hold a public hearing, and publish notice in the FEDERAL REGISTER of the date and location of the hearing, when he determines that such a hearing is necessary and likely to result in a timely and effective resolution of the issues. A transcript shall be kept of any such hearing.

§ 430.46 Disposition of petitions.

(a) After the submission of public comments under § 430.42(a), the Secretary shall prescribe a final rule or deny the petition within 6 months after the date the petition is filed.

(b) The final rule issued by the Secretary or a determination by the Secretary to deny the petition shall include a written statement setting forth his findings and conclusions, and the reasons and basis therefor. A copy of the Secretary's decision shall be sent to the petitioner and the affected State agency. The Secretary shall publish in the FEDERAL REGISTER a notice of the final rule granting or denying the petition and the reasons and basis therefor.

(c) If the Secretary finds that he cannot issue a final rule within the 6-month period pursuant to paragraph (a) of this section, he shall publish a notice in the FEDERAL REGISTER extending such period to a date certain, but no longer than one year after the date on which the petition was filed. Such notice shall include the reasons for the delay.

§ 430.47 Effective dates of final rules.

(a) A final rule exempting a State standard from Federal preemption will be effective:

(1) Upon publication in the FEDERAL REGISTER if the Secretary determines that such rule is needed to meet an ''energy emergency condition or water emergency condition (in the case of faucets, showerheads, water closets, and urinals)'' within the State.

(2) Three years after such rule is published in the FEDERAL REGISTER; or

(3) Five years after such rule is published in the FEDERAL REGISTER if the Secretary determines that such additional time is necessary due to the burdens of retooling, redesign or distribution.

(b) A final rule withdrawing a rule exempting a State standard will be effective upon publication in the FEDERAL REGISTER.

[54 FR 6078, Feb. 7, 1989, as amended at 63 FR 13319, Mar. 18, 1998]

§ 430.48 Request for reconsideration.

(a) Any petitioner whose petition for a rule has been denied may request reconsideration within 30 days of denial. The request shall contain a statement of facts and reasons supporting reconsideration and shall be submitted in writing to the Secretary.

(b) The denial of a petition will be reconsidered only where it is alleged and demonstrated that the denial was based on error in law or fact and that evidence of the error is found in the record of the proceedings.

(c) If the Secretary fails to take action on the request for reconsideration within 30 days, the request is deemed denied, and the petitioner may seek such judicial review as may be appropriate and available.

(d) A petitioner has not exhausted other administrative remedies until a request for reconsideration has been filed and acted upon or deemed denied.

§ 430.49 Finality of decision.

(a) A decision to prescribe a rule that a State energy conservation standard, water conservation standard (in the case of faucets, showerheads, water closets, and urinals) or other requirement not be preempted is final on the date the rule is issued, i.e., signed by the Secretary. A decision to prescribe such a rule has no effect on other regulations of a covered product of any other State.

(b) A decision to prescribe a rule withdrawing a rule exempting a State standard or other requirement is final on the date the rule is issued, i.e., signed by the Secretary. A decision to deny such a petition is final on the day a denial of a request for reconsideration is issued, i.e., signed by the Secretary.

[54 FR 6078, Feb. 7, 1989, as amended at 63 FR 13319, Mar. 18, 1998]

Subpart E—Small Business Exemptions

SOURCE: 54 FR 6080, Feb. 7, 1989, unless otherwise noted.

§ 430.50 Purpose and scope.

(a) This subpart establishes procedures for the submission and disposition of applications filed by manufacturers of covered consumer products with annual gross revenues that do not exceed $8 million to exempt them temporarily from all or part of energy conservation standards or water conservation standards (in the case of faucets, showerheads, water closets, and urinals) established by this part.

(b) The purpose of this subpart is to provide content and format requirements for manufacturers of covered consumer products with low annual gross revenues who desire to apply for temporary exemptions from applicable energy conservation standards or water conservation standards (in the case of faucets, showerheads, water closets, and urinals) .

[54 FR 6080, Feb. 7, 1989, as amended at 63 FR 13319, Mar. 18, 1998]

§ 430.51 Eligibility.

Any manufacturer of a covered product with annual gross revenues that do not exceed $8,000,000 from all its operations (including the manufacture and sale of covered products) for the 12-month period preceding the date of application may apply for an exemption. In determining the annual gross revenues of any manufacturer under this subpart, the annual gross revenue of any other person who controls, is controlled, by, or is under common control with, such manufacturer shall be taken into account.

§ 430.52 Requirements for applications.

(a) Each application filed under this subpart shall be submitted in triplicate to: U.S. Department of Energy, Small Business Exemptions, Appliance Efficiency Standards, Assistant Secretary for Conservation and Renewable Energy, Forrestal Building, 1000 Independence Avenue, SW., Washington, DC 20585.

(b) An application shall be in writing and shall include the following:

(1) Name and mailing address of applicant;

(2) Whether the applicant controls, is controlled by, or is under common control with another manufacturer, and if so, the nature of that control relationship;

(3) The text or substance of the standard or portion thereof for which the exemption is sought and the length of time desired for the exemption;

(4) Information showing the annual gross revenue of the applicant for the preceding 12-month period from all of its operations (including the manufacture and sale of covered products):

(5) Information to show that failure to grant an exemption is likely to result in a lessening of competition;

(6) Such other information, if any, believed to be pertinent by the petitioner; and

(7) Such other information as the Secretary may require.

§ 430.53 Processing of applications.

(a) The applicant shall serve a copy of the application, all supporting documents and all subsequent submissions, or a copy from which confidential information has been deleted pursuant to 10 CFR 1004.11, to the Secretary, which may be made available for public review.

(b) Within fifteen (15) days of the receipt of an application, the Secretary will either accept it for filing or reject it, and the applicant will be so notified in writing. Only such applications which conform to the requirements of this subpart and which contain sufficient information for the purposes of a substantive decision will be accepted for filing. Applications which do not so conform will be rejected and an explanation provided to the applicant in writing.

(c) For the purpose of this subpart, an application is deemed to be filed on the date it is accepted for filing.

(d) Promptly after receipt of an application and its acceptance for filing, notice of such application shall be published in the FEDERAL REGISTER. The notice shall set forth the availability for public review of data and information available, and shall solicit comments, data and information with respect to the determination on the application. Except as may otherwise be specified, the period for public comment shall be 60 days after the notice appears in the FEDERAL REGISTER.

(e) The Secretary on his own initiative may convene a hearing if, in his discretion, he considers such hearing will advance his evaluation of the application.

§ 430.54 Referral to the Attorney General.

Notice of the application for exemption under this subpart shall be transmitted to the Attorney General by the Secretary and shall contain (a) a statement of the facts and of the reasons for the exemption, and (b) copies of all documents submitted.

§ 430.55 Evaluation of application.

The Secretary shall grant an application for exemption submitted under this subpart if the Secretary finds, after obtaining the written views of the Attorney General, that a failure to allow an exemption would likely result in a lessening of competition.

§ 430.56 Decision and order.

(a) Upon consideration of the application and other relevant information received or obtained, the Secretary shall issue an order granting or denying the application.

(b) The order shall include a written statement setting forth the relevant facts and the legal basis of the order.

(c) The Secretary shall serve a copy of the order upon the applicant and upon any other person readily identifiable by the Secretary as one who is interested in or aggrieved by such order. The Secretary also shall publish in the FEDERAL REGISTER a notice of the

grant or denial of the order and the reason therefor.

§ 430.57 Duration of temporary exemption.

A temporary exemption terminates according to its terms but not later than twenty-four months after the affective date of the rule for which the exemption is allowed.

Subpart F [Reserved]

§§ 430.60–430.75 [Reserved]

APPENDICES A–B TO SUBPART F OF PART 430 [RESERVED]

PART 431—ENERGY EFFICIENCY PROGRAM FOR CERTAIN COMMERCIAL AND INDUSTRIAL EQUIPMENT

Subpart A—General Provisions

Sec.
431.1 Purpose and scope.
431.2 Definitions.

Subpart B—Electric Motors

431.11 Purpose and scope.
431.12 Definitions.

TEST PROCEDURES, MATERIALS INCORPORATED AND METHODS OF DETERMINING EFFICIENCY

431.14 Sources for information and guidance.
431.15 Materials incorporated by reference.
431.16 Test procedures for the measurement of energy efficiency.
431.17 Determination of efficiency.
431.18 Testing laboratories.
431.19 Department of Energy recognition of accreditation bodies.
431.20 Department of Energy recognition of nationally recognized certification programs.
431.21 Procedures for recognition and withdrawal of recognition of accreditation bodies and certification programs.

ENERGY CONSERVATION STANDARDS

431.25 Energy conservation standards and effective dates.
431.26 Preemption of State regulations.

LABELING

431.31 Labeling requirements.
431.32 Preemption of State regulations.

CERTIFICATION

431.35 Applicability of certification requirements.
431.36 Compliance Certification.

APPENDIX A TO SUBPART B OF PART 431 [RESERVED]
APPENDIX B TO SUBPART B OF PART 431—UNIFORM TEST METHOD FOR MEASURING NOMINAL FULL LOAD EFFICIENCY OF ELECTRIC MOTORS
APPENDIX C TO SUBPART B OF PART 431—COMPLIANCE CERTIFICATION

Subpart C—Commercial Refrigerators, Freezers and Refrigerator-Freezers

431.61 Purpose and scope.
431.62 Definitions concerning commercial refrigerators, freezers and refrigerator-freezers.

TEST PROCEDURES

431.63 Materials incorporated by reference.
431.64 Uniform test method for the measurement of energy consumption of commercial refrigerators, freezers, and refrigerator-freezers.

ENERGY CONSERVATION STANDARDS

431.66 Energy conservation standards and their effective dates.

Subpart D—Commercial Warm Air Furnaces

431.71 Purpose and scope.
431.72 Definitions concerning commercial warm air furnaces.

TEST PROCEDURES

431.75 Materials incorporated by reference.
431.76 Uniform test method for the measurement of energy efficiency of commercial warm air furnaces.

ENERGY CONSERVATION STANDARDS

431.77 Energy conservation standards and their effective dates.

Subpart E—Commercial Packaged Boilers

431.81 Purpose and scope.
431.82 Definitions concerning commercial packaged boilers.

TEST PROCEDURES

431.85 Materials incorporated by reference.
431.86 Uniform test method for the measurement of energy efficiency of commercial packaged boilers.

ENERGY CONSERVATION STANDARDS

431.87 Energy conservation standards and their effective dates.

Subpart F—Commercial Air Conditioners and Heat Pumps

431.91 Purpose and scope.
431.92 Definitions concerning commercial air conditioners and heat pumps.

TEST PROCEDURES

431.95 Materials incorporated by reference.
431.96 Uniform test method for the measurement of energy efficiency of commercial air conditioners and heat pumps.
431.97 Energy efficiency standards and their compliance dates.

Subpart G—Commercial Water Heaters, Hot Water Supply Boilers and Unfired Hot Water Storage Tanks

431.101 Purpose and scope.
431.102 Definitions concerning commercial water heaters, hot water supply boilers, and unfired hot water storage tanks.
431.104 Sources for information and guidance.

TEST PROCEDURES

431.105 Materials incorporated by reference.
431.106 Uniform test method for the measurement of energy efficiency of commercial water heaters and hot water supply boilers (other than commercial heat pump water heaters).
431.107 Uniform test method for the measurement of energy efficiency of commercial heat pump water heaters [Reserved]

ENERGY CONSERVATION STANDARDS

431.110 Energy conservation standards and their effective dates.

Subpart H—Automatic Commercial Ice Makers

431.131 Purpose and scope.
431.132 Definitions concerning automatic commercial ice makers.

TEST PROCEDURES

431.133 Materials incorporated by reference.
431.134 Uniform test methods for the measurement of energy and water consumption of automatic commercial ice makers.

ENERGY CONSERVATION STANDARDS

431.136 Energy conservation standards and their effective dates.

Subpart I—Commercial Clothers Washers

431.151 Purpose and scope.
431.152 Definitions concerning commercial clothes washers.

TEST PROCEDURES

431.154 Test procedures.

ENERGY CONSERVATION STANDARDS

431.156 Energy and water conservation standards and effective dates.

Subpart J [Reserved]

431.171–431.176 [Reserved]

Subpart K—Distribution Transformers

431.191 Purpose and scope.
431.192 Definitions.

TEST PROCEDURES

431.193 Test procedures for measuring energy consumption of distribution transformers.

ENERGY CONSERVATION STANDARDS

431.196 Energy conservation standards and their effective dates.

COMPLIANCE AND ENFORCEMENT

APPENDIX A TO SUBPART K OF PART 431—UNIFORM TEST METHOD FOR MEASURING THE ENERGY CONSUMPTION OF DISTRIBUTION TRANSFORMERS

Subpart L—Illuminated Exit Signs

431.201 Purpose and scope.
431.202 Definitions concerning illuminated exit signs.

TEST PROCEDURES

431.203 Materials incorporated by reference.
431.204 Uniform test method for the measurement of energy consumption of illuminated exit signs.

ENERGY CONSERVATION STANDARDS

431.206 Energy conservation standards and their effective dates.

Subpart M—Traffic Signal Modules and Pedestrian Modules

431.221 Purpose and scope.
431.222 Definitions concerning traffic signal modules and pedestrian modules.

TEST PROCEDURES

431.223 Materials incorporated by reference.
431.224 Uniform test method for the measurement of energy consumption for traffic signal modules and pedestrian modules.
431.226 Energy conservation standards and their effective dates.

Subpart N—Unit Heaters

431.241 Purpose and scope.
431.242 Definitions concerning unit heaters.

TEST PROCEDURES [RESERVED]

ENERGY CONSERVATION STANDARDS

431.246 Energy conservation standards and their effective dates.

Subpart O—Commercial Prerinse Spray Valves

431.261 Purpose and scope.
431.262 Definitions concerning commercial prerinse spray valves.

TEST PROCEDURES

431.263 Materials incorporated by reference.
431.264 Uniform test method for the measurement of flow rate for commercial prerinse spray valves.

ENERGY CONSERVATION STANDARDS

431.266 Energy conservation standards and their effective dates.

Subpart P—Mercury Vapor Lamp Ballasts

431.281 Purpose and scope.
431.282 Definitions concerning mercury vapor lamp ballasts.

TEST PROCEDURES [RESERVED]

ENERGY CONSERVATION STANDARDS

431.286 Energy conservation standards and their effective dates.

Subpart Q—Refrigerated Bottled or Canned Beverage Vending Machines

431.291 Scope.
431.292 Definitions concerning refrigerated bottled or canned beverage vending machines.

TEST PROCEDURES

431.293 Materials incorporated by reference.
431.294 Uniform test method for the measurement of energy consumption of refrigerated bottled or canned beverage vending machines.

ENERGY CONSERVATION STANDARDS

431.296 Energy conservation standards and their effective dates.

Subpart R—Walk-in Coolers and Walk-in Freezers

431.301 Purpose and scope.
431.302 Definitions concerning walk-in coolers and walk-in freezers.

TEST PROCEDURES

431.303 Materials incorporated by reference.
431.304 Uniform test method for the measurement of energy consumption of walk-in coolers and walk-in freezers.
431.305 [Reserved]

ENERGY CONSERVATION STANDARDS

431.306 Energy conservation standards and their effective dates.

APPENDIX A TO SUBPART R OF PART 431—UNIFORM TEST METHOD FOR THE MEASUREMENT OF ENERGY CONSUMPTION OF THE COMPONENTS OF ENVELOPES OF WALK-IN COOLERS AND WALK-IN FREEZERS

Subpart S—Metal Halide Lamp Ballasts and Fixtures

431.321 Purpose and scope.
431.322 Definitions concerning metal halide lamp ballasts and fixtures.

TEST PROCEDURES

431.323 Materials incorporated by reference.
431.324 Uniform test method for the measurement of energy efficiency and standby mode energy consumption of metal halide lamp ballasts.

ENERGY CONSERVATION STANDARDS

431.326 Energy conservation standards and their effective dates.

Subpart T [Reserved]

Subpart U—Enforcement for Electric Motors

431.381 Purpose and scope for electric motors.
431.382 Prohibited acts.
431.383 Enforcement process for electric motors.
431.384 [Reserved]
431.385 Cessation of distribution of a basic model of an electric motor.
431.386 Remedies.
431.387 Hearings and appeals.

APPENDIX A TO SUBPART U OF PART 431—SAMPLING PLAN FOR ENFORCEMENT TESTING OF ELECTRIC MOTORS

Subpart V—General Provisions

431.401 Petitions for waiver, and applications for interim waiver, of test procedure.
431.402 Preemption of State regulations for commercial HVAC & WH products.
431.403 Maintenance of records for electric motors.
431.404 Imported electric motors.
431.405 Exported electric motors.
431.406 Subpoena—Electric Motors.
431.407 Confidentiality—Electric Motors.

431.408 Preemption of State regulations for covered equipment other than electric motors and commercial heating, ventilating, air-conditioning and water heating products.

Subpart W—Petitions To Exempt State Regulation From Preemption; Petitions To Withdraw Exemption of State Regulation

431.421 Purpose and scope.
431.422 Prescriptions of a rule.
431.423 Filing requirements.
431.424 Notice of petition.
431.425 Consolidation.
431.426 Hearing.
431.427 Disposition of petitions.
431.428 Effective dates of final rules.
431.429 Request for reconsideration.
431.430 Finality of decision.

Subpart X—Small Electric Motors

431.441 Purpose and scope.
431.442 Definitions.

TEST PROCEDURES

431.443 Materials incorporated by reference.
431.444 Test procedures for the measurement of energy efficiency.
431.445 Determination of small electric motor energy efficiency.

ENERGY CONSERVATION STANDARDS

431.446 Small electric motors energy conservation standards and their effective dates.
431.447 Department of Energy recognition of nationally recognized certification programs.
431.448 Procedures for recognition and withdrawal of recognition of certification programs.

AUTHORITY: 42 U.S.C. 6291–6317.

SOURCE: 64 FR 54141, Oct. 5, 1999, unless otherwise noted.

Subpart A—General Provisions

§431.1 Purpose and scope.

This part establishes the regulations for the implementation of provisions relating to commercial and industrial equipment in Part B of Title III of the Energy Policy and Conservation Act (42 U.S.C. 6291–6309) and in Part C of Title III of the Energy Policy and Conservation Act (42 U.S.C. 6311–6317), which establishes an energy conservation program for certain commercial and industrial equipment.

[70 FR 60414, Oct. 18, 2005]

§431.2 Definitions.

The following definitions apply for purposes of this part. Any words or terms not defined in this Section or elsewhere in this part shall be defined as provided in Section 340 of the Act.

Act means the Energy Policy and Conservation Act of 1975, as amended, 42 U.S.C. 6291–6316.

Alternate efficiency determination method or AEDM means a method of calculating the efficiency of a commercial HVAC and WH product, in terms of the descriptor used in or under section 342(a) of the Act to state the energy conservation standard for that product.

Btu means British thermal unit, which is the quantity of heat required to raise the temperature of one pound of water by one degree Fahrenheit.

Commercial HVAC & WH product means any small, large, or very large commercial package air-conditioning and heating equipment, packaged terminal air conditioner, packaged terminal heat pump, single package vertical air conditioner, single package vertical heat pump, computer room air conditioner, variable refrigerant flow multi-split air conditioner, variable refrigerant flow multi-split heat pump, commercial packaged boiler, hot water supply boiler, commercial warm air furnace, instantaneous water heater, storage water heater, or unfired hot water storage tank.

Covered equipment means any electric motor, as defined in §431.12; commercial heating, ventilating, and air conditioning, and water heating product (HVAC & WH product), as defined in §431.172; commercial refrigerator, freezer, or refrigerator-freezer, as defined in §431.62; automatic commercial ice maker, as defined in §431.132; commercial clothes washer, as defined in §431.152; distribution transformer, as defined in §431.192; illuminated exit sign, as defined in §431.202; traffic signal module or pedestrian module, as defined in §431.222; unit heater, as defined in §431.242; commercial prerinse spray valve, as defined in §431.262; mercury vapor lamp ballast, as defined in §431.282; refrigerated bottled or canned beverage vending machine, as defined in §431.292; walk-in cooler and walk-in

freezer, as defined in § 431.302; metal halide ballast and metal halide lamp fixture, as defined in § 431.322.

DOE or *the Department* means the U.S. Department of Energy.

Energy conservation standard means any standards meeting the definitions of that term in 42 U.S.C. 6291(6) and 42 U.S.C. 6311(18) as well as any other water conservation standards and design requirements found in this part or parts 430 or 431.

EPCA means the Energy Policy and Conservation Act, as amended, 42 U.S.C. 6291–6316.

Flue loss means the sum of the sensible heat and latent heat above room temperature of the flue gases leaving the appliance.

Gas means propane or natural gas as defined by the Federal Power Commission.

Import means to import into the customs territory of the United States.

Independent laboratory means a laboratory or test facility not controlled by, affiliated with, having financial ties with, or under common control with the manufacturer or distributor of the covered equipment being evaluated.

Industrial equipment means an article of equipment, regardless of whether it is in fact distributed in commerce for industrial or commercial use, of a type which:

(1) In operation consumes, or is designed to consume energy;

(2) To any significant extent, is distributed in commerce for industrial or commercial use; and

(3) Is not a ''covered product'' as defined in Section 321(2) of EPCA, 42 U.S.C. 6291(2), other than a component of a covered product with respect to which there is in effect a determination under Section 341(c) of EPCA, 42 U.S.C. 6312(c).

ISO means International Organization for Standardization.

Manufacture means to manufacture, produce, assemble, or import.

Manufacturer means any person who manufactures industrial equipment, including any manufacturer of a commercial packaged boiler.

Manufacturer's model number means the identifier used by a manufacturer to uniquely identify the group of identical or essentially identical commercial equipment to which a particular unit belongs. The manufacturer's model number typically appears on equipment nameplates, in equipment catalogs and in other product advertising literature.

Private labeler means, with respect to a commercial HVAC & WH product, an owner of a brand or trademark on the label of a product which bears a private label. A commercial HVAC & WH product bears a private label if:

(1) Such product (or its container) is labeled with the brand or trademark of a person other than a manufacturer of such product;

(2) The person with whose brand or trademark such product (or container) is labeled has authorized or caused such product to be so labeled; and

(3) The brand or trademark of a manufacturer of such product does not appear on such label.

Secretary means the Secretary of Energy.

State means a State, the District of Columbia, Puerto Rico, or any territory or possession of the United States.

State regulation means a law or regulation of a State or political subdivision thereof.

[69 FR 61923, Oct. 21, 2004, as amended at 71 FR 71369, Dec. 8, 2006; 74 FR 12071, Mar. 23, 2009; 75 FR 666, Jan. 5, 2010; 76 FR 12503, Mar. 7, 2011; 77 FR 28987, May 16, 2012]

Subpart B—Electric Motors

SOURCE: 69 FR 61923, Oct. 21, 2004, unless otherwise noted.

§ 431.11 Purpose and scope.

This subpart contains energy conservation requirements for electric motors. It contains test procedures that EPCA requires DOE to prescribe, related requirements, energy conservation standards prescribed by EPCA, labeling rules, and compliance procedures. It also identifies materials incorporated by reference in this part. This subpart does not cover ''small electric motors,'' which are addressed in subpart X of this part.

[77 FR 26633, May 4, 2012]

§ 431.12 Definitions.

The following definitions apply for purposes of this subpart, and of subparts U and V of this part. Any words or terms not defined in this Section or elsewhere in this part shall be defined as provided in Section 340 of the Act.

Accreditation means recognition by an accreditation body that a laboratory is competent to test the efficiency of electric motors according to the scope and procedures given in Test Method B of IEEE Std 112–2004 and CSA C390–10 (incorporated by reference, see § 431.15).

Accreditation body means an organization or entity that conducts and administers an accreditation system and grants accreditation.

Accreditation system means a set of requirements to be fulfilled by a testing laboratory, as well as rules of procedure and management, that are used to accredit laboratories.

Accredited laboratory means a testing laboratory to which accreditation has been granted.

Alternative efficiency determination method or *AEDM* means, with respect to an electric motor, a method of calculating the total power loss and average full load efficiency.

Average full load efficiency means the arithmetic mean of the full load efficiencies of a population of electric motors of duplicate design, where the full load efficiency of each motor in the population is the ratio (expressed as a percentage) of the motor's useful power output to its total power input when the motor is operated at its full rated load, rated voltage, and rated frequency.

Basic model means, with respect to an electric motor, all units of a given type of electric motor (or class thereof) manufactured by a single manufacturer, and which have the same rating, have electrical characteristics that are essentially identical, and do not have any differing physical or functional characteristics which affect energy consumption or efficiency. For the purpose of this definition, ''rating'' means one of the 113 combinations of an electric motor's horsepower (or standard kilowatt equivalent), number of poles, and open or enclosed construction, with respect to which § 431.25 prescribes nominal full load efficiency standards.

Certificate of conformity means a document that is issued by a certification program, and that gives written assurance that an electric motor complies with the energy efficiency standard applicable to that motor, as specified in § 431.25.

Certification program means a certification system that determines conformity by electric motors with the energy efficiency standards prescribed by and pursuant to the Act.

Certification system means a system, that has its own rules of procedure and management, for giving written assurance that a product, process, or service conforms to a specific standard or other specified requirements, and that is operated by an entity independent of both the party seeking the written assurance and the party providing the product, process or service.

CSA means Canadian Standards Association.

Definite purpose motor means any motor that cannot be used in most general purpose applications and is designed either:

(1) To standard ratings with standard operating characteristics or standard mechanical construction for use under service conditions other than usual, such as those specified in NEMA MG1–2009, paragraph 14.3, ''Unusual Service Conditions,'' (incorporated by reference, see § 431.15); or

(2) For use on a particular type of application.

Electric motor means a machine that converts electrical power into rotational mechanical power.

Enclosed motor means an electric motor so constructed as to prevent the free exchange of air between the inside and outside of the case but not sufficiently enclosed to be termed airtight.

Fire pump electric motor means an electric motor, including any IEC-equivalent, that meets the requirements of section 9.5 of NFPA 20 (incorporated by reference, see § 431.15).

Fire pump motors [Reserved]

General purpose electric motor means any electric motor that is designed in standard ratings with either:

(1) Standard operating characteristics and mechanical construction for use under usual service conditions, such as those specified in NEMA MG1–

2009, paragraph 14.2, ''Usual Service Conditions,'' (incorporated by reference, see § 431.15) and without restriction to a particular application or type of application; or

(2) Standard operating characteristics or standard mechanical construction for use under unusual service conditions, such as those specified in NEMA MG1–2009, paragraph 14.3, ''Unusual Service Conditions,'' (incorporated by reference, see § 431.15) or for a particular type of application, and which can be used in most general purpose applications.

General purpose electric motor (subtype I) means a general purpose electric motor that:

(1) Is a single-speed, induction motor;

(2) Is rated for continuous duty (MG1) operation or for duty type S1 (IEC);

(3) Contains a squirrel-cage (MG1) or cage (IEC) rotor;

(4) Has foot-mounting that may include foot-mounting with flanges or detachable feet;

(5) Is built in accordance with NEMA T-frame dimensions or their IEC metric equivalents, including a frame size that is between two consecutive NEMA frame sizes or their IEC metric equivalents;

(6) Has performance in accordance with NEMA Design A (MG1) or B (MG1) characteristics or equivalent designs such as IEC Design N (IEC);

(7) Operates on polyphase alternating current 60-hertz sinusoidal power, and:

(i) Is rated at 230 or 460 volts (or both) including motors rated at multiple voltages that include 230 or 460 volts (or both), or

(ii) Can be operated on 230 or 460 volts (or both); and

(8) Includes, but is not limited to, explosion-proof construction.

NOTE TO DEFINITION OF GENERAL PURPOSE ELECTRIC MOTOR (SUBTYPE I): References to ''MG1'' above refer to NEMA Standards Publication MG1–2009 (incorporated by reference in § 431.15). References to ''IEC'' above refer to IEC 60034–1, 60034–12, 60050–411, and 60072–1 (incorporated by reference in § 431.15), as applicable.

General purpose electric motor (subtype II) means any general purpose electric motor that incorporates design elements of a general purpose electric motor (subtype I) but, unlike a general purpose electric motor (subtype I), is configured in one or more of the following ways:

(1) Is built in accordance with NEMA U-frame dimensions as described in NEMA MG1–1967 (incorporated by reference, see § 431.15) or in accordance with the IEC metric equivalents, including a frame size that is between two consecutive NEMA frame sizes or their IEC metric equivalents;

(2) Has performance in accordance with NEMA Design C characteristics as described in MG1 or an equivalent IEC design(s) such as IEC Design H;

(3) Is a close-coupled pump motor;

(4) Is a footless motor;

(5) Is a vertical solid shaft normal thrust motor (as tested in a horizontal configuration) built and designed in a manner consistent with MG1;

(6) Is an eight-pole motor (900 rpm); or

(7) Is a polyphase motor with a voltage rating of not more than 600 volts, is not rated at 230 or 460 volts (or both), and cannot be operated on 230 or 460 volts (or both).

NOTE TO DEFINITION OF GENERAL PURPOSE ELECTRIC MOTOR (SUBTYPE II): With the exception of the NEMA Motor Standards MG1–1967 (incorporated by reference in § 431.15), references to ''MG1'' above refer to the 2009 NEMA MG1–2009 (incorporated by reference in § 431.15). References to ''IEC'' above refer to IEC 60034–1, 60034–12, 60050–411, and 60072–1 (incorporated by reference in § 431.15), as applicable.

IEC means the International Electrotechnical Commission.

IEEE means the Institute of Electrical and Electronics Engineers, Inc.

NEMA means the National Electrical Manufacturers Association.

Nominal full-load efficiency means, with respect to an electric motor, a representative value of efficiency selected from the ''nominal efficiency'' column of Table 12–10, NEMA MG1–2009, (incorporated by reference, see § 431.15), that is not greater than the average full-load efficiency of a population of motors of the same design.

NEMA design B general purpose electric motor [Reserved]

NEMA Design B motor means a squirrel-cage motor that is:

(1) Designed to withstand full-voltage starting;

(2) Develops locked-rotor, breakdown, and pull-up torques adequate for

general application as specified in sections 12.38, 12.39 and 12.40 of NEMA MG1–2009 (incorporated by reference, see §431.15);

(3) Draws locked-rotor current not to exceed the values shown in section 12.35.1 for 60 hertz and 12.35.2 for 50 hertz of NEMA MG1–2009; and

(4) Has a slip at rated load of less than 5 percent for motors with fewer than 10 poles.

Open motor means an electric motor having ventilating openings which permit passage of external cooling air over and around the windings of the machine.

Special purpose motor means any motor, other than a general purpose motor or definite purpose motor, which has special operating characteristics or special mechanical construction, or both, designed for a particular application.

Total power loss means that portion of the energy used by an electric motor not converted to rotational mechanical power, expressed in percent.

[69 FR 61923, Oct. 21, 2004, as amended at 74 FR 12071, Mar. 23, 2009; 77 FR 26633, May 4, 2012]

EFFECTIVE DATE NOTE: At 78 FR 75993, Dec. 13, 2013, §431.12 was amended by removing the reserved terms ''Fire pump motor'' and ''NEMA design B general purpose electric motor;'' and by adding in alphabetical order, definitions for: ''air-over electric motor,'' ''brake electric motor,'' ''component set,'' ''definite purpose electric motor,'' ''electric motor with encapsulated windings,'' ''electric motor with moisture resistant windings,'' ''electric motor with sealed windings,'' ''IEC Design H motor,'' ''IEC Design N motor,'' ''immersible electric motor,'' ''inverter-capable electric motor,'' ''inverter-only electric motor,'' ''liquid-cooled electric motor,'' ''NEMA Design A motor,'' ''NEMA Design C motor,'' ''partial electric motor,'' ''special purpose electric motor,'' ''submersible electric motor,'' ''totally enclosed non-ventilated (TENV) electric motor'', effective Jan. 13, 2014. For the convenience of the user, the added text is set forth as follows:

§431.12 Definitions.

* * * * *

Air-over electric motor means an electric motor rated to operate in and be cooled by the airstream of a fan or blower that is not supplied with the motor and whose primary purpose is providing airflow to an application other than the motor driving it.

* * * * *

Brake electric motor means a motor that contains a dedicated mechanism for speed reduction, such as a brake, either within or external to the motor enclosure

* * * * *

Component set means a combination of motor parts that require the addition of more than two endshields (and their associated bearings) to create an operable motor. These parts may consist of any combination of a stator frame, wound stator, rotor, shaft, or endshields. For the purpose of this definition, the term ''operable motor'' means an electric motor engineered for performing in accordance with nameplate ratings.

* * * * *

Definite purpose electric motor means any electric motor that cannot be used in most general purpose applications and is designed either:

(1) To standard ratings with standard operating characteristics or standard mechanical construction for use under service conditions other than usual, such as those specified in NEMA MG1–2009, paragraph 14.3, ''Unusual Service Conditions,'' (incorporated by reference, see §431.15); or

(2) For use on a particular type of application.

* * * * *

Electric motor with encapsulated windings means an electric motor capable of passing the conformance test for water resistance described in NEMA MG 1–2009, paragraph 12.62 (incorporated by reference, see §431.15).

* * * * *

Electric motor with moisture resistant windings means an electric motor that is capable of passing the conformance test for moisture resistance generally described in NEMA MG 1–2009, paragraph 12.63 (incorporated by reference, see §431.15).

* * * * *

Electric motor with sealed windings means an electric motor capable of passing the conformance test for water resistance described in NEMA MG 1–2009, paragraph 12.62 (incorporated by reference, see §431.15).

* * * * *

IEC Design H motor means an electric motor that

(1) Is an induction motor designed for use with three-phase power;

(2) Contains a cage rotor;

(3) Is capable of direct-on-line starting

(4) Has 4, 6, or 8 poles;

(5) Is rated from 0.4 kW to 1600 kW at a frequency of 60 Hz; and

(6) Conforms to sections 8.1, 8.2, and 8.3 of the IEC 60034–12 edition 2.1 (incorporated by reference, see § 431.15) requirements for starting torque, locked rotor apparent power, and starting.

* * * * *

IEC Design N motor means an electric motor that:

(1) Is an induction motor designed for use with three-phase power;

(2) Contains a cage rotor;

(3) Is capable of direct-on-line starting;

(4) Has 2, 4, 6, or 8 poles;

(5) Is rated from 0.4 kW to 1600 kW at a frequency of 60 Hz; and

(6) Conforms to sections 6.1, 6.2, and 6.3 of the IEC 60034–12 edition 2.1 (incorporated by reference, see § 431.15) requirements for torque characteristics, locked rotor apparent power, and starting.

* * * * *

Immersible electric motor means an electric motor primarily designed to operate continuously in free-air, but is also capable of temporarily withstanding complete immersion in liquid for a continuous period of no less than 30 minutes.

* * * * *

Inverter-capable electric motor means an electric motor designed to be directly connected to polyphase, sinusoidal line power, but that is also capable of continuous operation on an inverter drive over a limited speed range and associated load.

* * * * *

Inverter-only electric motor means an electric motor that is capable of rated operation solely with an inverter, and is not intended for operation when directly connected to polyphase, sinusoidal line power.

* * * * *

Liquid-cooled electric motor means a motor that is cooled by liquid circulated using a designated cooling apparatus such that the liquid or liquid-filled conductors come into direct contact with the parts of the motor.

* * * * *

NEMA Design A motor means a squirrel-cage motor that:

(1) Is Designed to withstand full-voltage starting and developing locked-rotor torque as shown in NEMA MG1–2009, paragraph 12.38.1 (incorporated by reference, see § 431.15);

(2) Has pull-up torque not less than the values shown in NEMA MG1–2009, paragraph 12.40.1;

(3) Has breakdown torque not less than the values shown in NEMA MG1–2009, paragraph 12.39.1;

(4) Has a locked-rotor current not to exceed the values shown in NEMA MG1–2009, paragraph 12.35.1 for 60 hertz and NEMA MG1–2009, paragraph 12.35.2 for 50 hertz; and

(5) Has a slip at rated load of less than 5 percent for motors with fewer than 10 poles.

* * * * *

NEMA Design C motor means a squirrel-cage motor that:

(1) Is Designed to withstand full-voltage starting and developing locked-rotor torque for high-torque applications up to the values shown in NEMA MG1–2009, paragraph 12.38.2 (incorporated by reference, see § 431.15);

(2) Has pull-up torque not less than the values shown in NEMA MG1–2009, paragraph 12.40.2;

(3) Has breakdown torque not less than the values shown in NEMA MG1–2009, paragraph 12.39.2;

(4) Has a locked-rotor current not to exceed the values shown in NEMA MG1–2009, paragraphs 12.35.1 for 60 hertz and 12.35.2 for 50 hertz; and

(5) Has a slip at rated load of less than 5 percent.

* * * * *

Partial electric motor means an assembly of motor components necessitating the addition of no more than two endshields, including bearings, to create an an electric motor capable of operation in accordance with the applicable nameplate ratings.

* * * * *

Special purpose electric motor means any electric motor, other than a general purpose motor or definite electric purpose motor, which has special operating characteristics or special mechanical construction, or both, designed for a particular application.

* * * * *

Submersible electric motor means an electric motor that:

(1) Is intended to operate continuously only while submerged in liquid;

(2) Is capable of operation while submerged in liquid for an indefinite period of time; and

(3) Has been sealed to prevent ingress of liquid from contacting the motor's internal parts.

* * * * *

Totally enclosed non-ventilated (TENV) electric motor means an electric motor that is built in a frame-surface cooled, totally enclosed configuration that is designed and equipped to be cooled only by free convection.

TEST PROCEDURES, MATERIALS INCORPORATED AND METHODS OF DETERMINING EFFICIENCY

§ 431.14 Sources for information and guidance.

(a) *General*. The standards listed in this paragraph are referred to in the DOE procedures for testing laboratories, and recognition of accreditation bodies and certification programs but are not incorporated by reference. These sources are given here for information and guidance.

(b) *NVLAP*. National Voluntary Laboratory Accreditation Program, National Institute of Standards and Technology, 100 Bureau Drive, M/S 2140, Gaithersburg, MD 20899–2140, 301–975–4016, or go to *http://www.nist.gov/nvlap/*. Also see *http://www.nist.gov/nvlap/nvlap-handbooks.cfm*.

(1) NVLAP Handbook 150, Procedures and General Requirements, February 2006.

(2) NVLAP Handbook 150–10, Efficiency of Electric Motors, February 2007.

(3) NIST Handbook 150–10 Checklist, Efficiency of Electric Motors Program, (2007–05–04).

(4) NVLAP Lab Bulletin Number: LB–42–2009, Changes to NVLAP Efficiency of Electric Motors Program, March 19, 2009.

(c) *ISO/IEC*. International Organization for Standardization (ISO), 1, ch. de la Voie-Creuse, CP 56, CH– 1211 Geneva 20, Switzerland/International Electrotechnical Commission, 3, rue de Varembé, P.O. Box 131, CH–1211 Geneva 20, Switzerland.

(1) ISO/IEC Guide 25, General requirements for the competence of calibration and testing laboratories, 1990.

(2) ISO Guide 27, Guidelines for corrective action to be taken by a certification body in the event of either misapplication of its mark of conformity to a product, or products which bear the mark of the certification body being found to subject persons or property to risk, 1983.

(3) ISO/IEC Guide 28, General rules for a model third-party certification system for products, 2004.

(4) ISO/IEC Guide 58, Calibration and testing laboratory accreditation systems—General requirements for operation and recognition, 1993.

(5) ISO/IEC Guide 65, General requirements for bodies operating product certification systems, 1996.

[77 FR 26634, May 4, 2012]

§ 431.15 Materials incorporated by reference.

(a) *General*. The Department of Energy incorporates by reference the following standards and test procedures into subpart B of part 431. The Director of the Federal Register has approved the material listed for incorporation by reference in accordance with 5 U.S.C. 552(a) and 1 CFR part 51. Any subsequent amendment to a standard by the standard-setting organization will not affect DOE regulations unless and until DOE amends its test procedures. Material is incorporated as it exists on the date of the approval, and a notice of any change in the material will be published in the FEDERAL REGISTER. All approved material is available for inspection at the U.S. Department of Energy, Office of Energy Efficiency and Renewable Energy, Building Technologies Program, Sixth Floor, 950 L'Enfant Plaza SW., Washington, DC 20024, (202) 586–2945, or go to *http://www1.eere.energy.gov/buildings/appliance_standards/*. Also, this material is available for inspection at the National Archives and Records Administration (NARA). For information on the availability of this material at NARA, call 202–741–6030, or go to: *http://www.archives.gov/federal_register/code_of_federal_regulations/ibr_locations.html*.

(b) *CSA*. Canadian Standards Association, Sales Department, 5060 Spectrum Way, Suite 100, Mississauga, Ontario, L4W 5N6, Canada, 1–800–463–6727, or go to *http://www.shopcsa.ca/onlinestore/welcome.asp*.

(1) CSA C390–10, Test methods, marking requirements, and energy efficiency levels for three-phase induction motors, March 2010, IBR approved for §§ 431.12; 431.19; 431.20; appendix B to subpart B of part 431.

(2) [Reserved]

(c) *IEC*. International Electrotechnical Commission Central Office, 3, rue de Varembé, P.O. Box 131, CH–1211 GENEVA 20, Switzerland, +41 22 919 02 11, or go to *http://webstore.iec.ch*.

(1) IEC 60034–1 Edition 12.0 2010–02, (''IEC 60034–1''), Rotating Electrical Machines, Part 1: Rating and Performance, February 2010, IBR approved as follows: section 4: Duty, clause 4.2.1 and Figure 1, IBR approved for § 431.12.

(2) IEC 60034–12 Edition 2.1 2007–09, (''IEC 60034–12''), Rotating Electrical Machines, Part 12: Starting Performance of Single-Speed Three-Phase Cage Induction Motors, September 2007, IBR approved as follows: clauses 5.2, 5.4, 6, and 8, and Tables 1, 2, 3, 4, 5, 6, and 7, IBR approved for § 431.12.

(3) IEC 60050–411, International Electrotechnical Vocabulary Chapter 411: Rotating machines, 1996, IBR approved as follows: sections 411–33–07 and 411–37–26, IBR approved for § 431.12.

(4) IEC 60072–1, Dimensions and Output Series for Rotating Electrical Machines—Part 1: Frame numbers 56 to 400 and flange numbers 55 to 1080, 1991, IBR approved as follows: clauses 2, 3, 4.1, 6.1, 7, and 10, and Tables 1, 2 and 4, IBR approved for § 431.12.

(d) *IEEE*. Institute of Electrical and Electronics Engineers, Inc., 445 Hoes Lane, P.O. Box 1331, Piscataway, NJ 08855–1331, 1–800–678–IEEE (4333), or *http://www.ieee.org/web/publications/home/index.html*.

(1) IEEE Std 112–2004, Test Procedure for Polyphase Induction Motors and Generators, approved February 9, 2004, IBR approved as follows: section 6.4, Efficiency Test Method B, Input-Output with Loss Segregation, IBR approved for §§ 431.12; 431.19; 431.20; appendix B to subpart B of part 431.

(2) [Reserved]

(e) *NEMA*. National Electrical Manufacturers Association, 1300 North 17th Street, Suite 1752, Rosslyn, Virginia 22209, 703–841–3200, or go to *http://www.nema.org/*.

(1) NEMA Standards Publication MG1–2009 (''NEMA MG1–2009''), Motors and Generators, copyright 2009, IBR approved as follows:

(i) Section I, General Standards Applying to All Machines, Part 1, Referenced Standards and Definitions, paragraphs 1.18.1, 1.18.1.1, 1.19.1.1, 1.19.1.2, 1.19.1.3, and 1.40.1, IBR approved for § 431.12;

(ii) Section I, General Standards Applying to All Machines, Part 4, Dimensions, Tolerances, and Mounting, paragraphs 4.1, 4.2.1, 4.2.2, 4.4.1, 4.4.2, 4.4.4, 4.4.5, and 4.4.6, Figures 4–1, 4–2, 4–3, 4–4, and 4–5, and Table 4–2, IBR approved for § 431.12;

(iii) Section II, Small (Fractional) and Medium (Integral) Machines, Part 12, Tests and Performance—AC and DC Motors:

(A) Paragraphs 12.35.1, 12.35.2, 12.38.1, 12.38.2, 12.39.1, 12.39.2, and 12.40.1, 12.40.2, and Tables 12–2, 12–3, and 12–10, IBR approved for § 431.12;

(B) Paragraph 12.58.1, IBR approved for § 431.12 and appendix B to subpart B of part 431;

(C) Paragraph 12.58.2, IBR approved for § 431.31.

(iv) Section II, Small (Fractional) and Medium (Integral) Machines, Part 14, Application Data—AC and DC Small and Medium Machines, paragraphs 14.2 and 14.3, IBR approved for § 431.12.

(2) NEMA Standards Publication MG1–1967, (''NEMA MG1–1967''), Motors and Generators, January 1968, IBR approved as follows:

(i) Part 11, Dimensions, IBR approved for § 431.12;

(ii) Part 13, Frame Assignments—A–C Integral-Horsepower Motors, IBR approved for § 431.12.

(f) *NFPA*. National Fire Protection Association, 1 Batterymarch Park, Quincy, MA 02169–7471, 617–770–3000, or go to *http://nfpa.org/*.

(1) NFPA 20, 2010 Edition, Standard for the Installation of Stationary Pumps for Fire Protection, section 9.5, IBR approved for § 431.12.

(2) (Reserved)

[77 FR 26634, May 4, 2012]

EFFECTIVE DATE NOTE: At 78 FR 75994, Dec.13, 2013, § 431.15 was amended by adding paragraph (e)(1)(iii)(D), effective Jan. 13, 2014. For the convenience of the user, the added text is set forth as follows:

§ 431.15 Materials incorporated by reference.

* * * * *

(e) * * *
(1) * * *
(iii) * * *
(D) Paragraphs 12.62 and 12.63, IBR approved for § 431.12.

* * * * *

§ 431.16 Test procedures for the measurement of energy efficiency.

For purposes of 10 CFR part 431 and EPCA, the test procedures for measuring the energy efficiency of an electric motor shall be the test procedures specified in appendix B to this subpart B.

§ 431.17 Determination of efficiency.

When a party determines the energy efficiency of an electric motor in order to comply with an obligation imposed on it by or pursuant to Part C of Title III of EPCA, 42 U.S.C. 6311–6316, this Section applies. This section does not apply to enforcement testing conducted pursuant to § 431.192.

(a) *Provisions applicable to all electric motors*—(1) *General requirements*. The average full load efficiency of each basic model of electric motor must be determined either by testing in accordance with § 431.16 of this subpart, or by application of an alternative efficiency determination method (AEDM) that meets the requirements of paragraphs (a)(2) and (3) of this section, provided, however, that an AEDM may be used to determine the average full load efficiency of one or more of a manufacturer's basic models only if the average full load efficiency of at least five of its other basic models is determined through testing.

(2) *Alternative efficiency determination method*. An AEDM applied to a basic model must be:

(i) Derived from a mathematical model that represents the mechanical and electrical characteristics of that basic model, and

(ii) Based on engineering or statistical analysis, computer simulation or modeling, or other analytic evaluation of performance data.

(3) *Substantiation of an alternative efficiency determination method*. Before an AEDM is used, its accuracy and reliability must be substantiated as follows:

(i) The AEDM must be applied to at least five basic models that have been tested in accordance with § 431.16, and

(ii) The predicted total power loss for each such basic model, calculated by applying the AEDM, must be within plus or minus ten percent of the mean total power loss determined from the testing of that basic model.

(4) *Subsequent verification of an AEDM*. (i) Each manufacturer shall periodically select basic models representative of those to which it has applied an AEDM, and for each basic model selected shall either:

(A) Subject a sample of units to testing in accordance with §§ 431.16 and 431.17(b)(2) by an accredited laboratory that meets the requirements of § 431.18;

(B) Have a certification body recognized under § 431.20 certify its nominal full load efficiency; or

(C) Have an independent state-registered professional engineer, who is qualified to perform an evaluation of electric motor efficiency in a highly competent manner and who is not an employee of the manufacturer, review the manufacturer's representations and certify that the results of the AEDM accurately represent the total power loss and nominal full load efficiency of the basic model.

(ii) Each manufacturer that has used an AEDM under this section shall have available for inspection by the Department of Energy records showing: the method or methods used; the mathematical model, the engineering or statistical analysis, computer simulation or modeling, and other analytic evaluation of performance data on which the AEDM is based; complete test data, product information, and related information that the manufacturer has generated or acquired pursuant to paragraphs (a)(3) and (a)(4)(i) of this section; and the calculations used to determine the average full load efficiency

and total power losses of each basic model to which the AEDM was applied.

(iii) If requested by the Department, the manufacturer shall conduct simulations to predict the performance of particular basic models of electric motors specified by the Department, analyses of previous simulations conducted by the manufacturer, sample testing of basic models selected by the Department, or a combination of the foregoing.

(5) *Use of a certification program or accredited laboratory*. (i) A manufacturer may have a certification program, that DOE has classified as nationally recognized under § 431.20, certify the nominal full load efficiency of a basic model of electric motor, and issue a certificate of conformity for the motor.

(ii) For each basic model for which a certification program is not used as described in paragraph (a)(5)(i) of this section, any testing of the motor pursuant to paragraphs (a)(1) through (3) of this section to determine its energy efficiency must be carried out in accordance with paragraph (b) of this section, in an accredited laboratory that meets the requirements of § 431.18. (This includes testing of the basic model, pursuant to paragraph (a)(3)(i) of this section, to substantiate an AEDM.)

(b) *Additional testing requirements applicable when a certification program is not used*—(1) *Selection of basic models for testing*. (i) Basic models must be selected for testing in accordance with the following criteria:

(A) Two of the basic models must be among the five basic models with the highest unit volumes of production by the manufacturer in the prior year, or during the prior 12 calendar month period beginning in 1997,[1] whichever is later;

(B) The basic models should be of different horsepowers without duplication;

(C) The basic models should be of different frame number series without duplication; and

(D) Each basic model should be expected to have the lowest nominal full load efficiency among the basic models with the same rating (''rating'' as used here has the same meaning as it has in the definition of ''basic model'').

(ii) In any instance where it is impossible for a manufacturer to select basic models for testing in accordance with all of these criteria, the criteria shall be given priority in the order in which they are listed. Within the limits imposed by the criteria, basic models shall be selected randomly.

(2) *Selection of units for testing*. For each basic model selected for testing,[2] a sample of units shall be selected at random and tested. The sample shall be comprised of production units of the basic model, or units that are representative of such production units. The sample size shall be not fewer than five units, except that when fewer than five units of a basic model would be produced over a reasonable period of time (approximately 180 days), then each unit shall be tested. In a test of compliance with a represented average or nominal efficiency:

(i) The average full-load efficiency of the sample $\bar{X}$ which is defined by

$$\overline{X} = \frac{1}{n}\sum_{i=1}^{n} X_i,$$

where X_i is the measured full-load efficiency of unit i and n is the number of units tested, shall satisfy the condition:

$$\overline{X} \geq \frac{100}{1 + 1.05\left(\frac{100}{RE} - 1\right)}$$

where RE is the represented nominal full-load efficiency, and

(ii) The lowest full-load efficiency in the sample X_{min}, which is defined by

$$X_{min} = \min\left(X_i\right)$$

shall satisfy the condition

[1] In identifying these five basic models, any electric motor that does not comply with § 431.25 shall be excluded from consideration.

[2] Components of similar design may be substituted without requiring additional testing if the represented measures of energy consumption continue to satisfy the applicable sampling provision.

$$\overline{X}_{min} \geq \frac{100}{1 + 1.15\left(\frac{100}{RE} - 1\right)}$$

(3) *Substantiation of an alternative efficiency determination method.* The basic models tested under § 431.17(a)(3)(i) must be selected for testing in accordance with paragraph (b)(1) of this section, and units of each such basic model must be tested in accordance with paragraph (b)(2) of this section by an accredited laboratory that meets the requirements of § 431.18.

§ 431.18 Testing laboratories.

(a) Testing pursuant to § 431.17(a)(5)(ii) must be conducted in an accredited laboratory for which the accreditation body was:

(1) The National Institute of Standards and Technology/National Voluntary Laboratory Accreditation Program (NIST/NVLAP); or

(2) A laboratory accreditation body having a mutual recognition arrangement with NIST/NVLAP; or

(3) An organization classified by the Department, pursuant to § 431.19, as an accreditation body.

(b) NIST/NVLAP is under the auspices of the National Institute of Standards and Technology (NIST)/National Voluntary Laboratory Accreditation Program (NVLAP), which is part of the U.S. Department of Commerce. NIST/NVLAP accreditation is granted on the basis of conformance with criteria published in 15 CFR Part 285. The National Voluntary Laboratory Accreditation Program, ''Procedures and General Requirements,'' NIST Handbook 150–10, February 2007, and Lab Bulletin LB–42–2009, Efficiency of Electric Motors Program, (referenced for guidance only, see § 431.14) present the technical requirements of NVLAP for the Efficiency of Electric Motors field of accreditation. This handbook supplements NIST Handbook 150, National Voluntary Laboratory Accreditation Program ''Procedures and General Requirements,'' which contains 15 CFR part 285 plus all general NIST/NVLAP procedures, criteria, and policies. Information regarding NIST/NVLAP and its Efficiency of Electric Motors Program (EEM) can be obtained from NIST/NVLAP, 100 Bureau Drive, Mail Stop 2140, Gaithersburg, MD 20899–2140, (301) 975–4016 (telephone), or (301) 926–2884 (fax).

[69 FR 61923, Oct. 21, 2004, as amended at 77 FR 26635, May 4, 2012]

§ 431.19 Department of Energy recognition of accreditation bodies.

(a) *Petition.* To be classified by the Department of Energy as an accreditation body, an organization must submit a petition to the Department requesting such classification, in accordance with paragraph (c) of this section and § 431.21. The petition must demonstrate that the organization meets the criteria in paragraph (b) of this section.

(b) *Evaluation criteria.* To be classified as an accreditation body by the Department, the organization must meet the following criteria:

(1) It must have satisfactory standards and procedures for conducting and administering an accreditation system and for granting accreditation. This must include provisions for periodic audits to verify that the laboratories receiving its accreditation continue to conform to the criteria by which they were initially accredited, and for withdrawal of accreditation where such conformance does not occur, including failure to provide accurate test results.

(2) It must be independent of electric motor manufacturers, importers, distributors, private labelers or vendors. It cannot be affiliated with, have financial ties with, be controlled by, or be under common control with any such entity.

(3) It must be qualified to perform the accrediting function in a highly competent manner.

(4) It must be expert in the content and application of the test procedures and methodologies in IEEE Std 112–2004 Test Method B or CSA C390–10, (incorporated by reference, see § 431.15).

(c) *Petition format.* Each petition requesting classification as an accreditation body must contain a narrative statement as to why the organization meets the criteria set forth in paragraph (b) of this section, must be signed on behalf of the organization by an authorized representative, and must be accompanied by documentation that

supports the narrative statement. The following provides additional guidance:

(1) *Standards and procedures*. A copy of the organization's standards and procedures for operating an accreditation system and for granting accreditation should accompany the petition.

(2) *Independent status*. The petitioning organization should identify and describe any relationship, direct or indirect, that it has with an electric motor manufacturer, importer, distributor, private labeler, vendor, trade association or other such entity, as well as any other relationship it believes might appear to create a conflict of interest for it in performing as an accreditation body for electric motor testing laboratories. It should explain why it believes such relationship(s) would not compromise its independence as an accreditation body.

(3) *Qualifications to do accrediting*. Experience in accrediting should be discussed and substantiated by supporting documents. Of particular relevance would be documentary evidence that establishes experience in the application of guidelines contained in the ISO/IEC Guide 58, *Calibration and testing laboratory accreditation systems—General requirements for operation and recognition*, as well as experience in overseeing compliance with the guidelines contained in the ISO/IEC Guide 25, *General Requirements for the Competence of Calibration and Testing Laboratories (referenced for guidance only, see § 431.14)*.

(4) Expertise in electric motor test procedures. The petition should set forth the organization's experience with the test procedures and methodologies in IEEE Std 112–2004 Test Method B and CSA C390–10, (incorporated by reference, see § 431.15). This part of the petition should include items such as, but not limited to, a description of prior projects and qualifications of staff members. Of particular relevance would be documentary evidence that establishes experience in applying the guidelines contained in the ISO/IEC Guide 25, General Requirements for the Competence of Calibration and Testing Laboratories, (referenced for guidance only, see § 431.14) to energy efficiency testing for electric motors.

(d) *Disposition*. The Department will evaluate the petition in accordance with § 431.21, and will determine whether the applicant meets the criteria in paragraph (b) of this section to be classified as an accrediting body.

[69 FR 61923, Oct. 21, 2004, as amended at 77 FR 26635, May 4, 2012]

§ 431.20 Department of Energy recognition of nationally recognized certification programs.

(a) *Petition*. For a certification program to be classified by the Department of Energy as being nationally recognized in the United States for the purposes of Section 345(c) of EPCA (''nationally recognized''), the organization operating the program must submit a petition to the Department requesting such classification, in accordance with paragraph (c) of this Section and § 431.21. The petition must demonstrate that the program meets the criteria in paragraph (b) of this section.

(b) *Evaluation criteria*. For a certification program to be classified by the Department as nationally recognized, it must meet the following criteria:

(1) It must have satisfactory standards and procedures for conducting and administering a certification system, including periodic follow up activities to assure that basic models of electric motor continue to conform to the efficiency levels for which they were certified, and for granting a certificate of conformity.

(2) It must be independent of electric motor manufacturers, importers, distributors, private labelers or vendors. It cannot be affiliated with, have financial ties with, be controlled by, or be under common control with any such entity.

(3) It must be qualified to operate a certification system in a highly competent manner.

(4) It must be expert in the content and application of the test procedures and methodologies in IEEE Std 112–2004 Test Method B or CSA C390–10, (incorporated by reference, see § 431.15). It must have satisfactory criteria and procedures for the selection and sampling of electric motors tested for energy efficiency.

(c) *Petition format.* Each petition requesting classification as a nationally recognized certification program must contain a narrative statement as to why the program meets the criteria listed in paragraph (b) of this section, must be signed on behalf of the organization operating the program by an authorized representative, and must be accompanied by documentation that supports the narrative statement. The following provides additional guidance as to the specific criteria:

(1) *Standards and procedures.* A copy of the standards and procedures for operating a certification system and for granting a certificate of conformity should accompany the petition.

(2) *Independent status.* The petitioning organization should identify and describe any relationship, direct or indirect, that it or the certification program has with an electric motor manufacturer, importer, distributor, private labeler, vendor, trade association or other such entity, as well as any other relationship it believes might appear to create a conflict of interest for the certification program in operating a certification system for compliance by electric motors with energy efficiency standards. It should explain why it believes such relationship would not compromise its independence in operating a certification program.

(3) *Qualifications to operate a certification system.* Experience in operating a certification system should be discussed and substantiated by supporting documents. Of particular relevance would be documentary evidence that establishes experience in the application of guidelines contained in the ISO/IEC Guide 65, *General requirements for bodies operating product certification systems,* ISO/IEC Guide 27, *Guidelines for corrective action to be taken by a certification body in the event of either misapplication of its mark of conformity to a product, or products which bear the mark of the certification body being found to subject persons or property to risk,* and ISO/IEC Guide 28, *General rules for a model third-party certification system for products,* as well as experience in overseeing compliance with the guidelines contained in the ISO/IEC Guide 25, *General requirements for the competence of calibration and testing laboratories (referenced for guidance only, see § 431.14).*

(4) *Expertise in electric motor test procedures.* The petition should set forth the program's experience with the test procedures and methodologies in IEEE Std 112–2004 Test Method B or CSA C390–10, (incorporated by reference, see § 431.15). This part of the petition should include items such as, but not limited to, a description of prior projects and qualifications of staff members. Of particular relevance would be documentary evidence that establishes experience in applying guidelines contained in the ISO/IEC Guide 25, General Requirements for the Competence of Calibration and Testing Laboratories (referenced for guidance only, see 431.14) to energy efficiency testing for electric motors.

(d) *Disposition.* The Department will evaluate the petition in accordance with § 431.21, and will determine whether the applicant meets the criteria in paragraph (b) of this section for classification as a nationally recognized certification program.

[69 FR 61923, Oct. 21, 2004, as amended at 77 FR 26635, May 4, 2012]

§ 431.21 Procedures for recognition and withdrawal of recognition of accreditation bodies and certification programs.

(a) *Filing of petition.* Any petition submitted to the Department pursuant to §§ 431.19(a) or 431.20(a), shall be entitled ''Petition for Recognition'' (''Petition'') and must be submitted, in triplicate to the Assistant Secretary for Energy Efficiency and Renewable Energy, U.S. Department of Energy, Forrestal Building, 1000 Independence Avenue, SW., Washington, DC 20585–0121. In accordance with the provisions set forth in 10 CFR 1004.11, any request for confidential treatment of any information contained in such a Petition or in supporting documentation must be accompanied by a copy of the Petition or supporting documentation from which the information claimed to be confidential has been deleted.

(b) *Public notice and solicitation of comments.* DOE shall publish in the FEDERAL REGISTER the Petition from which confidential information, as determined by DOE, has been deleted in

accordance with 10 CFR 1004.11 and shall solicit comments, data and information on whether the Petition should be granted. The Department shall also make available for inspection and copying the Petition's supporting documentation from which confidential information, as determined by DOE, has been deleted in accordance with 10 CFR 1004.11. Any person submitting written comments to DOE with respect to a Petition shall also send a copy of such comments to the petitioner.

(c) *Responsive statement by the petitioner*. A petitioner may, within 10 working days of receipt of a copy of any comments submitted in accordance with paragraph (b) of this section, respond to such comments in a written statement submitted to the Assistant Secretary for Energy Efficiency and Renewable Energy. A petitioner may address more than one set of comments in a single responsive statement.

(d) *Public announcement of interim determination and solicitation of comments*. The Assistant Secretary for Energy Efficiency and Renewable Energy shall issue an interim determination on the Petition as soon as is practicable following receipt and review of the Petition and other applicable documents, including, but not limited to, comments and responses to comments. The petitioner shall be notified in writing of the interim determination. DOE shall also publish in the FEDERAL REGISTER the interim determination and shall solicit comments, data and information with respect to that interim determination. Written comments and responsive statements may be submitted as provided in paragraphs (b) and (c) of this section.

(e) *Public announcement of final determination*. The Assistant Secretary for Energy Efficiency and Renewable Energy shall as soon as practicable, following receipt and review of comments and responsive statements on the interim determination, publish in the FEDERAL REGISTER a notice of final determination on the Petition.

(f) *Additional information*. The Department may, at any time during the recognition process, request additional relevant information or conduct an investigation concerning the Petition. The Department's determination on a Petition may be based solely on the Petition and supporting documents, or may also be based on such additional information as the Department deems appropriate.

(g) *Withdrawal of recognition*—(1) *Withdrawal by the Department*. If the Department believes that an accreditation body or certification program that has been recognized under §§ 431.19 or 431.20, respectively, is failing to meet the criteria of paragraph (b) of the section under which it is recognized, the Department will so advise such entity and request that it take appropriate corrective action. The Department will give the entity an opportunity to respond. If after receiving such response, or no response, the Department believes satisfactory correction has not been made, the Department will withdraw its recognition from that entity.

(2) *Voluntary withdrawal*. An accreditation body or certification program may withdraw itself from recognition by the Department by advising the Department in writing of such withdrawal. It must also advise those that use it (for an accreditation body, the testing laboratories, and for a certification organization, the manufacturers) of such withdrawal.

(3) *Notice of withdrawal of recognition*. The Department will publish in the FEDERAL REGISTER a notice of any withdrawal of recognition that occurs pursuant to this paragraph.

ENERGY CONSERVATION STANDARDS

§ 431.25 Energy conservation standards and effective dates.

(a) Except as provided for fire pump electric motors in paragraph (b) of this section, each general purpose electric motor (subtype I) with a power rating of 1 horsepower or greater, but not greater than 200 horsepower, including a NEMA Design B or an equivalent IEC Design N motor that is a general purpose electric motor (subtype I), manufactured (alone or as a component of another piece of equipment) on or after December 19, 2010, shall have a nominal full-load efficiency that is not less than the following:

TABLE 1—NOMINAL FULL-LOAD EFFICIENCIES OF GENERAL PURPOSE ELECTRIC MOTORS (SUBTYPE I), EXCEPT FIRE PUMP ELECTRIC MOTORS

Motor horsepower/standard kilowatt equivalent	Nominal full-load efficiency					
	Open motors (number of poles)			Enclosed motors (number of poles)		
	6	4	2	6	4	2
1/.75	82.5	85.5	77.0	82.5	85.5	77.0
1.5/1.1	86.5	86.5	84.0	87.5	86.5	84.0
2/1.5	87.5	86.5	85.5	88.5	86.5	85.5
3/2.2	88.5	89.5	85.5	89.5	89.5	86.5
5/3.7	89.5	89.5	86.5	89.5	89.5	88.5
7.5/5.5	90.2	91.0	88.5	91.0	91.7	89.5
10/7.5	91.7	91.7	89.5	91.0	91.7	90.2
15/11	91.7	93.0	90.2	91.7	92.4	91.0
20/15	92.4	93.0	91.0	91.7	93.0	91.0
25/18.5	93.0	93.6	91.7	93.0	93.6	91.7
30/22	93.6	94.1	91.7	93.0	93.6	91.7
40/30	94.1	94.1	92.4	94.1	94.1	92.4
50/37	94.1	94.5	93.0	94.1	94.5	93.0
60/45	94.5	95.0	93.6	94.5	95.0	93.6
75/55	94.5	95.0	93.6	94.5	95.4	93.6
100/75	95.0	95.4	93.6	95.0	95.4	94.1
125/90	95.0	95.4	94.1	95.0	95.4	95.0
150/110	95.4	95.8	94.1	95.8	95.8	95.0
200/150	95.4	95.8	95.0	95.8	96.2	95.4

(b) Each fire pump electric motor that is a general purpose electric motor (subtype I) or general purpose electric motor (subtype II) manufactured (alone or as a component of another piece of equipment) on or after December 19, 2010, shall have a nominal full-load efficiency that is not less than the following:

TABLE 2—NOMINAL FULL-LOAD EFFICIENCIES OF FIRE PUMP ELECTRIC MOTORS

Motor horsepower/standard kilowatt equivalent	Nominal full-load efficiency							
	Open motors (number of poles)				Enclosed motors (number of poles)			
	8	6	4	2	8	6	4	2
1/.75	74.0	80.0	82.5	.....	74.0	80.0	82.5	75.5
1.5/1.1	75.5	84.0	84.0	82.5	77.0	85.5	84.0	82.5
2/1.5	85.5	85.5	84.0	84.0	82.5	86.5	84.0	84.0
3/2.2	86.5	86.5	86.5	84.0	84.0	87.5	87.5	85.5
5/3.7	87.5	87.5	87.5	85.5	85.5	87.5	87.5	87.5
7.5/5.5	88.5	88.5	88.5	87.5	85.5	89.5	89.5	88.5
10/7.5	89.5	90.2	89.5	88.5	88.5	89.5	89.5	89.5
15/11	89.5	90.2	91.0	89.5	88.5	90.2	91.0	90.2
20/15	90.2	91.0	91.0	90.2	89.5	90.2	91.0	90.2
25/18.5	90.2	91.7	91.7	91.0	89.5	91.7	92.4	91.0
30/22	91.0	92.4	92.4	91.0	91.0	91.7	92.4	91.0
40/30	91.0	93.0	93.0	91.7	91.0	93.0	93.0	91.7
50/37	91.7	93.0	93.0	92.4	91.7	93.0	93.0	92.4
60/45	92.4	93.6	93.6	93.0	91.7	93.6	93.6	93.0
75/55	93.6	93.6	94.1	93.0	93.0	93.6	94.1	93.0
100/75	93.6	94.1	94.1	93.0	93.0	94.1	94.5	93.6
125/90	93.6	94.1	94.5	93.6	93.6	94.1	94.5	94.5
150/110	93.6	94.5	95.0	93.6	93.6	95.0	95.0	94.5
200/150	93.6	94.5	95.0	94.5	94.1	95.0	95.0	95.0
250/186	94.5	95.4	95.4	94.5	94.5	95.0	95.0	95.4
300/224	.....	95.4	95.4	95.0	.....	95.0	95.4	95.4
350/261	.....	95.4	95.4	95.0	.....	95.0	95.4	95.4
400/298	.....	.....	95.4	95.4	.....	.....	95.4	95.4
450/336	.....	.....	95.8	95.8	.....	.....	95.4	95.4
500/373	.....	.....	95.8	95.8	.....	.....	95.8	95.4

(c) Except as provided for fire pump electric motors in paragraph (b) of this section, each general purpose electric motor (subtype II) with a power rating of 1 horsepower or greater, but not greater than 200 horsepower, including a NEMA Design B or an equivalent IEC Design N motor that is a general purpose electric motor (subtype II), manufactured (alone or as a component of another piece of equipment) on or after December 19, 2010, shall have a nominal full-load efficiency that is not less than the following:

TABLE 3—NOMINAL FULL-LOAD EFFICIENCIES OF GENERAL PURPOSE ELECTRIC MOTORS (SUBTYPE II), EXCEPT FIRE PUMP ELECTRIC MOTORS

Motor horsepower/ standard kilowatt equivalent	Nominal full-load efficiency							
	Open motors (number of poles)				Enclosed motors (number of poles)			
	8	6	4	2	8	6	4	2
1/.75	74.0	80.0	82.5	.....	74.0	80.0	82.5	75.5
1.5/1.1	75.5	84.0	84.0	82.5	77.0	85.5	84.0	82.5
2/1.5	85.5	85.5	84.0	84.0	82.5	86.5	84.0	84.0
3/2.2	86.5	86.5	86.5	84.0	84.0	87.5	87.5	85.5
5/3.7	87.5	87.5	87.5	85.5	85.5	87.5	87.5	87.5
7.5/5.5	88.5	88.5	88.5	87.5	85.5	89.5	89.5	88.5
10/7.5	89.5	90.2	89.5	88.5	88.5	89.5	89.5	89.5
15/11	89.5	90.2	91.0	89.5	88.5	90.2	91.0	90.2
20/15	90.2	91.0	91.0	90.2	89.5	90.2	91.0	90.2
25/18.5	90.2	91.7	91.7	91.0	89.5	91.7	92.4	91.0
30/22	91.0	92.4	92.4	91.0	91.0	91.7	92.4	91.0
40/30	91.0	93.0	93.0	91.7	91.0	93.0	93.0	91.7
50/37	91.7	93.0	93.0	92.4	91.7	93.0	93.0	92.4
60/45	92.4	93.6	93.6	93.0	91.7	93.6	93.6	93.0
75/55	93.6	93.6	94.1	93.0	93.0	93.6	94.1	93.0
100/75	93.6	94.1	94.1	93.0	93.0	94.1	94.5	93.6
125/90	93.6	94.1	94.5	93.6	93.6	94.1	94.5	94.5
150/110	93.6	94.5	95.0	93.6	93.6	95.0	95.0	94.5
200/150	93.6	94.5	95.0	94.5	94.1	95.0	95.0	95.0

(d) Each NEMA Design B or an equivalent IEC Design N motor that is a general purpose electric motor (subtype I) or general purpose electric motor (subtype II), excluding fire pump electric motors, with a power rating of more than 200 horsepower, but not greater than 500 horsepower, manufactured (alone or as a component of another piece of equipment) on or after December 19, 2010, shall have a nominal full-load efficiency that is not less than the following:

TABLE 4—NOMINAL FULL-LOAD EFFICIENCIES OF NEMA DESIGN B GENERAL PURPOSE ELECTRIC MOTORS (SUBTYPE I AND II), EXCEPT FIRE PUMP ELECTRIC MOTORS

Motor horsepower/ standard kilowatt equivalent	Nominal full-load efficiency							
	Open motors (number of poles)				Enclosed motors (number of poles)			
	8	6	4	2	8	6	4	2
250/186	94.5	95.4	95.4	94.5	94.5	95.0	95.0	95.4
300/224	.....	95.4	95.4	95.0	.....	95.0	95.4	95.4
350/261	.....	95.4	95.4	95.0	.....	95.0	95.4	95.4
400/298	.....	.....	95.4	95.4	.....	.....	95.4	95.4
450/336	.....	.....	95.8	95.8	.....	.....	95.4	95.4
500/373	.....	.....	95.8	95.8	.....	.....	95.8	95.4

(e) For purposes of determining the required minimum nominal full-load efficiency of an electric motor that has a horsepower or kilowatt rating between two horsepower or two kilowatt ratings listed in any table of energy conservation standards in paragraphs (a) through (d) of this section, each

such motor shall be deemed to have a listed horsepower or kilowatt rating, determined as follows:

(1) A horsepower at or above the midpoint between the two consecutive horsepowers shall be rounded up to the higher of the two horsepowers;

(2) A horsepower below the midpoint between the two consecutive horsepowers shall be rounded down to the lower of the two horsepowers; or

(3) A kilowatt rating shall be directly converted from kilowatts to horsepower using the formula 1 kilowatt = (1/0.746) horsepower. The conversion should be calculated to three significant decimal places, and the resulting horsepower shall be rounded in accordance with paragraph (e)(1) or (e)(2) of this section, whichever applies.

(f) This section does not apply to definite purpose motors, special purpose motors, or those motors exempted by the Secretary.

[77 FR 26635, May 4, 2012]

§ 431.26 Preemption of State regulations.

Any State regulation providing for any energy conservation standard, or other requirement with respect to the energy efficiency or energy use, of an electric motor that is not identical to a Federal standard in effect under this subpart is preempted by that standard, except as provided for in Section 345(a) and 327(b) and (c) of the Act.

LABELING

§ 431.31 Labeling requirements.

(a) *Electric motor nameplate*—(1) *Required information*. The permanent nameplate of an electric motor for which standards are prescribed in § 431.25 must be marked clearly with the following information:

(i) The motor's nominal full load efficiency (as of the date of manufacture), derived from the motor's average full load efficiency as determined pursuant to this subpart; and

(ii) A Compliance Certification number (''CC number'') supplied by DOE to the manufacturer or private labeler, pursuant to § 431.36(f), and applicable to that motor. Such CC number must be on the nameplate of a motor beginning 90 days after either:

(A) The manufacturer or private labeler has received the number upon submitting a Compliance Certification covering that motor, or

(B) The expiration of 21 days from DOE's receipt of a Compliance Certification covering that motor, if the manufacturer or private labeler has not been advised by DOE that the Compliance Certification fails to satisfy § 431.36.

(2) *Display of required information*. All orientation, spacing, type sizes, type faces, and line widths to display this required information shall be the same as or similar to the display of the other performance data on the motor's permanent nameplate. The nominal full-load efficiency shall be identified either by the term ''Nominal Efficiency'' or ''Nom. Eff.'' or by the terms specified in paragraph 12.58.2 of NEMA MG1–2009, (incorporated by reference, see § 431.15) as for example ''NEMA Nom. Eff. ____.'' The Compliance Certification number issued pursuant to § 431.36 shall be in the form ''CC ____.''

(3) *Optional display*. The permanent nameplate of an electric motor, a separate plate, or decalcomania, may be marked with the encircled lower case letters ''ee'', for example,

or with some comparable designation or logo, if the motor meets the applicable standard prescribed in § 431.25, as determined pursuant to this subpart, and is covered by a Compliance Certification that satisfies § 431.36.

(b) *Disclosure of efficiency information in marketing materials*. (1) The same information that must appear on an electric motor's permanent nameplate pursuant to paragraph (a)(1) of this section, shall be prominently displayed:

(i) On each page of a catalog that lists the motor; and

(ii) In other materials used to market the motor.

(2) The ''ee'' logo, or other similar logo or designations, may also be used in catalogs and other materials to the same extent they may be used on labels under paragraph (a)(3) of this section.

[69 FR 61923, Oct. 21, 2004, as amended at 77 FR 26637, May 4, 2012]

§ 431.32 Preemption of State regulations.

The provisions of § 431.31 supersede any State regulation to the extent required by Section 327 of the Act. Pursuant to the Act, all State regulations that require the disclosure for any electric motor of information with respect to energy consumption, other than the information required to be disclosed in accordance with this part, are superseded.

CERTIFICATION

§ 431.35 Applicability of certification requirements.

Section 431.36 sets forth the procedures for manufacturers to certify that electric motors comply with the applicable energy efficiency standards set forth in this subpart.

§ 431.36 Compliance Certification.

(a) *General.* A manufacturer or private labeler shall not distribute in commerce any basic model of an electric motor which is subject to an energy efficiency standard set forth in this subpart unless it has submitted to the Department a Compliance Certification certifying, in accordance with the provisions of this section, that the basic model meets the requirements of the applicable standard. The representations in the Compliance Certification must be based upon the basic model's energy efficiency as determined in accordance with the applicable requirements of this subpart. This means, in part, that either:

(1) The representations as to the basic model must be based on use of a certification organization; or

(2) Any testing of the basic model on which the representations are based must be conducted at an accredited laboratory.

(b) *Required contents*—(1) *General representations.* Each Compliance Certification must certify that:

(i) The nominal full load efficiency for each basic model of electric motor distributed is not less than the minimum nominal full load efficiency required for that motor by § 431.25;

(ii) All required determinations on which the Compliance Certification is based were made in compliance with the applicable requirements prescribed in this subpart;

(iii) All information reported in the Compliance Certification is true, accurate, and complete; and

(iv) The manufacturer or private labeler is aware of the penalties associated with violations of the Act and the regulations thereunder, and of 18 U.S.C. 1001 which prohibits knowingly making false statements to the Federal Government.

(2) *Specific data.* (i) For each rating of electric motor (as the term ''rating'' is defined in the definition of basic model) which a manufacturer or private labeler distributes, the Compliance Certification must report the nominal full load efficiency, determined pursuant to §§ 431.16 and 431.17, of the least efficient basic model within that rating.

(ii) The Compliance Certification must identify the basic models on which actual testing has been performed to meet the requirements of § 431.17.

(iii) The format for a Compliance Certification is set forth in appendix C of this subpart.

(c) *Optional contents.* In any Compliance Certification, a manufacturer or private labeler may at its option request that DOE provide it with a unique Compliance Certification number (''CC number'') for any brand name, trademark or other label name under which the manufacturer or private labeler distributes electric motors covered by the Certification. Such a Compliance Certification must also identify all other names, if any, under which the manufacturer or private labeler distributes electric motors, and to which the request does not apply.

(d) *Signature and submission.* A manufacturer or private labeler must submit the Compliance Certification either on its own behalf, signed by a corporate official of the company, or through a third party (for example, a trade association or other authorized representative) acting on its behalf. Where a third party is used, the Compliance Certification must identify the official of the manufacturer or private labeler who authorized the third party to make representations on the company's behalf, and must be signed by a corporate

official of the third party. The Compliance Certification must be submitted to the Department electronically at *https://www.regulations.doe.gov/ccms*. Alternatively, the Compliance Certification may be submitted by certified mail to: Certification and Compliance Reports, U.S. Department of Energy, Office of Energy Efficiency and Renewable Energy, Building Technologies Program, EE–2J, Forrestal Building, 1000 Independence Avenue, SW., Washington, DC 20585–0121.

(e) *New basic models*. For electric motors, a Compliance Certification must be submitted for a new basic model only if the manufacturer or private labeler has not previously submitted to DOE a Compliance Certification, that meets the requirements of this section, for a basic model that has the same rating as the new basic model, and that has a lower nominal full load efficiency than the new basic model.

(f) *Response to Compliance Certification; Compliance Certification Number (CC number)*—(1) DOE processing of Certification. Promptly upon receipt of a Compliance Certification, the Department will determine whether the document contains all of the elements required by this section, and may, in its discretion, determine whether all or part of the information provided in the document is accurate. The Department will then advise the submitting party in writing either that the Compliance Certification does not satisfy the requirements of this section, in which case the document will be returned, or that the Compliance Certification satisfies this section. The Department will also advise the submitting party of the basis for its determination.

(2) *Issuance of CC number(s)*. (i) Initial Compliance Certification. When DOE advises that the initial Compliance Certification submitted by or on behalf of a manufacturer or private labeler is acceptable, either:

(A) DOE will provide a single unique CC number, ''CC_____,'' to the manufacturer or private labeler, and such CC number shall be applicable to all electric motors distributed by the manufacturer or private labeler, or

(B) When required by paragraph (f)(3) of this section, DOE will provide more than one CC number to the manufacturer or private labeler.

(ii) Subsequent Compliance Certification. When DOE advises that any other Compliance Certification is acceptable, it will provide a unique CC number for any brand name, trademark or other name when required by paragraph (f)(3) of this section.

(iii) When DOE declines to provide a CC number as requested by a manufacturer or private labeler in accordance with §431.36(c), DOE will advise the requester of the reasons for such refusal.

(3) *Issuance of two or more CC numbers*. (i) DOE will provide a unique CC number for each brand name, trademark or other label name for which a manufacturer or private labeler requests such a number in accordance with §431.36(c), except as follows. DOE will not provide a CC number for any brand name, trademark or other label name

(A) For which DOE has previously provided a CC number, or

(B) That duplicates or overlaps with other names under which the manufacturer or private labeler sells electric motors.

(ii) Once DOE has provided a CC number for a particular name, that shall be the only CC number applicable to all electric motors distributed by the manufacturer or private labeler under that name.

(iii) If the Compliance Certification in which a manufacturer or private labeler requests a CC number is the initial Compliance Certification submitted by it or on its behalf, and it distributes electric motors not covered by the CC number(s) DOE provides in response to the request(s), DOE will also provide a unique CC number that shall be applicable to all of these other motors.

[69 FR 61923, Oct. 21, 2004, as amended at 76 FR 59006, Sept. 23, 2011; 77 FR 26638, May 4, 2012]

APPENDIX A TO SUBPART B OF PART 431 [RESERVED]

APPENDIX B TO SUBPART B OF PART 431—UNIFORM TEST METHOD FOR MEASURING NOMINAL FULL LOAD EFFICIENCY OF ELECTRIC MOTORS

1. *Definitions*.

Definitions contained in §§ 431.2 and 431.12 are applicable to this appendix.

2. *Test Procedures.*

Efficiency and losses shall be determined in accordance with NEMA MG1–2009, paragraph 12.58.1, ''Determination of Motor Efficiency and Losses,'' (incorporated by reference, see § 431.15) and either:

(1) CSA C390–10, (incorporated by reference, see § 431.15), or

(2) IEEE Std 112–2004 Test Method B, Input-Output With Loss Segregation, (incorporated by reference, see § 431.15).

3. *Amendments to test procedures.*

Any revision to IEEE Std 112–2004 Test Method B, NEMA MG1–2009, or CSA C390–10, (incorporated by reference, see § 431.15) shall not be effective for purposes of certification and compliance testing unless and until this appendix and 10 CFR Part 431 are amended to incorporate that revision.

[77 FR 26638, May 4, 2012]

EFFECTIVE DATE NOTE: At 78 FR 75994, Dec.13, 2013, appendix B was amended by adding an introductory note and section 4, effective Jan. 13, 2014. For the convenience of the user, the added text is set forth as follows:

APPENDIX B TO SUBPART B OF PART 431—UNIFORM TEST METHOD FOR MEASURING NOMINAL FULL-LOAD EFFICIENCY OF ELECTRIC MOTORS

NOTE: After June 11, 2014, any representations made with respect to the energy use or efficiency of electric motors for which energy conservation standards are currently provided at 10 CFR 431.25 must be made in accordance with the results of testing pursuant to this appendix.

For manufacturers conducting tests of motors for which energy conservation standards are provided at 10 CFR 431.25, after January 13, 2014 and prior to June 11, 2014, manufacturers must conduct such test in accordance with either this appendix or appendix B as it appeared at 10 CFR Part 431, subpart B, appendix B, in the 10 CFR Parts 200 to 499 edition revised as of January 1, 2013. Any representations made with respect to the energy use or efficiency of such electric motors must be in accordance with whichever version is selected. Given that after June 11, 2014 representations with respect to the energy use or efficiency of electric motors must be made in accordance with tests conducted pursuant to this appendix, manufacturers may wish to begin using this test procedure as soon as possible.

For any other electric motor type that is not currently covered by the energy conservation standards at 10 CFR 431.25, manufacturers of this equipment will need to use Appendix B 180 days after the effective date of the final rule adopting energy conservation standards for these motors.

* * * * *

4. Procedures for the Testing of Certain Electric Motor Types.

Prior to testing according to IEEE Std 112–2004 (Test Method B) or CSA C390–10 (incorporated by reference, see § 431.15), each basic model of the electric motor types listed below must be set up in accordance with the instructions of this section to ensure consistent test results. These steps are designed to enable a motor to be attached to a dynamometer and run continuously for testing purposes. For the purposes of this appendix, a ''standard bearing'' is a 6000 series, either open or grease-lubricated double-shielded, single-row, deep groove, radial ball bearing.

4.1 Brake Electric Motors:

Brake electric motors shall be tested with the brake component powered separately from the motor such that it does not activate during testing. Additionally, for any 10-minute period during the test and while the brake is being powered such that it remains disengaged from the motor shaft, record the power consumed (i.e., watts). Only power used to drive the motor is to be included in the efficiency calculation; power supplied to prevent the brake from engaging is not included in this calculation. In lieu of powering the brake separately, the brake may be disengaged mechanically, if such a mechanism exists and if the use of this mechanism does not yield a different efficiency value than separately powering the brake electrically.

4.2 Close-Coupled Pump Electric Motors and Electric Motors with Single or Double Shaft Extensions of Non-Standard Dimensions or Design:

To attach the unit under test to a dynamometer, close-coupled pump electric motors and electric motors with single or double shaft extensions of non-standard dimensions or design must be tested using a special coupling adapter.

4.3 Electric Motors with Non-Standard Endshields or Flanges:

If it is not possible to connect the electric motor to a dynamometer with the non-standard endshield or flange in place, the testing laboratory shall replace the non-standard endshield or flange with an endshield or flange meeting NEMA or IEC specifications. The replacement component should be obtained from the manufacturer or, if the manufacturer chooses, machined by the testing laboratory after consulting with the manufacturer regarding the critical characteristics of the endshield.

4.4 Electric Motors with Non-Standard Bases, Feet or Mounting Configurations

An electric motor with a non-standard base, feet, or mounting configuration may be

mounted on the test equipment using adaptive fixtures for testing as long as the mounting or use of adaptive mounting fixtures does not have an adverse impact on the performance of the electric motor, particularly on the cooling of the motor.

4.5 Electric Motors with a Separately-powered Blower:

For electric motors furnished with a separately-powered blower, the losses from the blower's motor should not be included in any efficiency calculation. This can be done either by powering the blower's motor by a source separate from the source powering the electric motor under test or by connecting leads such that they only measure the power of the motor under test.

4.6 Immersible Electric Motors

Immersible electric motors shall be tested with all contact seals removed but be otherwise unmodified.

4.7 Partial Electric Motors:

Partial electric motors shall be disconnected from their mated piece of equipment. After disconnection from the equipment, standard bearings and/or endshields shall be added to the motor, such that it is capable of operation. If an endshield is necessary, an endshield meeting NEMA or IEC specifications should be obtained from the manufacturer or, if the manufacturer chooses, machined by the testing laboratory after consulting with the manufacturer regarding the critical characteristics of the endshield.

4.8 Vertical Electric Motors and Electric Motors with Bearings Incapable of Horizontal Operation:

Vertical electric motors and electric motors with thrust bearings shall be tested in a horizontal or vertical configuration in accordance with IEEE 112 (Test Method B), depending on the testing facility's capabilities and construction of the motor, except if the motor is a vertical solid shaft normal thrust general purpose electric motor (subtype II), in which case it shall be tested in a horizontal configuration in accordance with IEEE 112 (Test Method B). Preference shall be given to testing a motor in its native orientation. If the unit under test cannot be reoriented horizontally due to its bearing construction, the electric motor's bearing(s) shall be removed and replaced with standard bearings. If the unit under test contains oil-lubricated bearings, its bearings shall be removed and replaced with standard bearings. Finally, if the unit under test contains a hollow shaft, a solid shaft shall be inserted, bolted to the non-drive end of the motor and welded on the drive end. Enough clearance shall be maintained such that attachment to a dynamometer is possible.

APPENDIX C TO SUBPART B OF PART 431—COMPLIANCE CERTIFICATION

CERTIFICATION OF COMPLIANCE WITH ENERGY EFFICIENCY STANDARDS FOR ELECTRIC MOTORS (OFFICE OF MANAGEMENT AND BUDGET CONTROL NUMBER: 1910–1400. EXPIRES FEBRUARY 13, 2014)

An electronic form is available at *https://www.regulations.doe.gov/ccms/.*

1. Name and Address of Company (the ''company''):

_____

_____

_____

_____

2. Name(s) to be Marked on Electric Motors to Which this Compliance Certification Applies:

_____

_____

_____

_____

3. If manufacturer or private labeler wishes to receive a unique Compliance Certification number for use with any particular brand name, trademark, or other label name, fill out the following two items:

A. List each brand name, trademark, or other label name for which the company requests a Compliance Certification number:

_____

_____

_____

B. List other name(s), if any, under which the company sells electric motors (if not listed in item 2 above):

_____

_____

_____

Submit electronically at *https://www.regulations.doe.gov/ccms.*

Submit paper form by Certified Mail to: U.S. Department of Energy, Office of Energy Efficiency and Renewable Energy, Building Technologies (EE–2J), Forrestal Building, 1000 Independence Avenue, SW., Washington, DC 20585–0121.

This Compliance Certification reports on and certifies compliance with requirements contained in 10 CFR Part 431 (Energy Conservation Program for Certain Commercial and Industrial Equipment) and Part C of the Energy Policy and Conservation Act (Pub. L. 94–163), and amendments thereto. It is signed by a responsible official of the above named company. Attached and incorporated as part of this Compliance Certification is a Listing of Electric Motor Efficiencies. For each rating of electric motor* for which the Listing specifies the nominal full load efficiency of a basic model, the company distributes no less

efficient basic model with that rating and all basic models with that rating comply with the applicable energy efficiency standard.

*For this purpose, the term ''rating'' means one of the combinations of an electric motor's horsepower (or standard kilowatt equivalent), number of poles, motor type, and open or enclosed construction, with respect to which §431.25 of 10 CFR Part 431 prescribes nominal full load efficiency standards.

Person to Contact for Further Information:

Name: _____

Address: _____

_____

_____

_____

Telephone Number: _____

Facsimile Number: _____

If any part of this Compliance Certification, including the Attachment, was prepared by a third party organization under the provisions of 10 CFR 431.36, the company official authorizing third party representations:

Name: _____

Address: _____

_____

_____

_____

Telephone Number: _____

Facsimile Number: _____

Third Party Organization Officially Acting as Representative:

Third Party Organization: _____

Responsible Person at the Organization: _____

_____

Address: _____

_____

_____

_____

Telephone Number: _____

Facsimile Number: _____

All required determinations on which this Compliance Certification is based were made in conformance with the applicable requirements in 10 CFR Part 431, subpart B. All information reported in this Compliance Certification is true, accurate, and complete. The company is aware of the penalties associated with violations of the Act and the regulations thereunder, and is also aware of the provisions contained in 18 U.S.C. 1001, which prohibits knowingly making false statements to the Federal Government.

Signature: _____

Date: _____

Name: _____

Title: _____

Firm or Organization: _____

ATTACHMENT OF CERTIFICATION OF COMPLIANCE WITH ENERGY EFFICIENCY STANDARDS FOR ELECTRIC MOTOR EFFICIENCIES

Date: _____

Name of Company: _____

Motor Type (i.e., general purpose electric motor (subtype I), fire pump electric motor, general purpose electric motor (subtype II), NEMA Design B general purpose electric motor)

_____

Motor horsepower/standard kilowatt equivalent	Least efficient basic model—(model numbers(s)) Nominal full-load efficiency							
	Open motors (number of poles)				Enclosed motors (number of poles)			
	8	6	4	2	8	6	4	2
1/.75								
1.5/1.1								
2/1.5								
3/2.2								
5/3.7								

Motor horsepower/standard kilowatt equivalent	Least efficient basic model—(model numbers(s)) Nominal full-load efficiency							
	Open motors (number of poles)				Enclosed motors (number of poles)			
	8	6	4	2	8	6	4	2
	_____	_____	_____	_____	_____	_____	_____	_____
	_____	_____	_____	_____	_____	_____	_____	_____
Etc	_____	_____	_____	_____	_____	_____	_____	_____
	_____	_____	_____	_____	_____	_____	_____	_____

Note: Place an asterisk beside each reported nominal full load efficiency that is determined by actual testing rather than by application of an alternative efficiency determination method. Also list below additional basic models that were subjected to actual testing.

Basic Model means all units of a given type of electric motor (or class thereof) manufactured by a single manufacturer, and which (i) have the same rating, (ii) have electrical design characteristics that are essentially identical, and (iii) do not have any differing physical or functional characteristics that affect energy consumption or efficiency.

Rating means one of the combinations of an electric motor's horsepower (or standard kilowatt equivalent), number of poles, motor type, and open or enclosed construction, with respect to which §431.25 of 10 CFR Part 431 prescribes nominal full load efficiency standards.

MODELS ACTUALLY TESTED AND NOT PREVIOUSLY IDENTIFIED

Motor horsepower/standard kilowatt equivalent	Least efficient basic model—(model numbers(s)) Nominal full-load efficiency							
	Open motors (number of poles)				Enclosed motors (number of poles)			
	8	6	4	2	8	6	4	2
_____	_____	_____	_____	_____	_____	_____	_____	_____
	_____	_____	_____	_____	_____	_____	_____	_____
_____	_____	_____	_____	_____	_____	_____	_____	_____
	_____	_____	_____	_____	_____	_____	_____	_____
_____	_____	_____	_____	_____	_____	_____	_____	_____
	_____	_____	_____	_____	_____	_____	_____	_____
_____	_____	_____	_____	_____	_____	_____	_____	_____
	_____	_____	_____	_____	_____	_____	_____	_____
_____	_____	_____	_____	_____	_____	_____	_____	_____
	_____	_____	_____	_____	_____	_____	_____	_____
_____	_____	_____	_____	_____	_____	_____	_____	_____
	_____	_____	_____	_____	_____	_____	_____	_____
Etc	_____	_____	_____	_____	_____	_____	_____	_____
	_____	_____	_____	_____	_____	_____	_____	_____

[69 FR 61923, Oct. 21, 2004, as amended at 76 FR 59006, Sept. 23, 2011]

Subpart C—Commercial Refrigerators, Freezers and Refrigerator-Freezers

SOURCE: 70 FR 60414, Oct. 18, 2005, unless otherwise noted.

§ 431.61 Purpose and scope.

This subpart contains energy conservation requirements for commercial refrigerators, freezers and refrigerator-freezers, pursuant to Part C of Title III of the Energy Policy and Conservation Act, as amended, 42 U.S.C. 6311–6317.

§ 431.62 Definitions concerning commercial refrigerators, freezers and refrigerator-freezers.

Air-curtain angle means:

(1) For equipment without doors and without a discharge air grille or discharge air honeycomb, the angle between a vertical line extended down from the highest point on the manufacturer's recommended load limit line and the load limit line itself, when the equipment is viewed in cross-section; and

(2) For all other equipment without doors, the angle formed between a vertical line and the straight line drawn by connecting the point at the inside edge of the discharge air opening with the point at the inside edge of the return air opening, when the equipment is viewed in cross-section.

Basic model means all units of a given type of covered product (or class thereof) manufactured by one manufacturer, having the same primary energy source, and which have essentially identical electrical, physical, and functional (or hydraulic) characteristics that affect energy consumption, energy efficiency, water consumption, or water efficiency.

Commercial refrigerator, freezer, and refrigerator-freezer means refrigeration equipment that—

(1) Is not a consumer product (as defined in § 430.2 of part 430);

(2) Is not designed and marketed exclusively for medical, scientific, or research purposes;

(3) Operates at a chilled, frozen, combination chilled and frozen, or variable temperature;

(4) Displays or stores merchandise and other perishable materials horizontally, semi-vertically, or vertically;

(5) Has transparent or solid doors, sliding or hinged doors, a combination of hinged, sliding, transparent, or solid doors, or no doors;

(6) Is designed for pull-down temperature applications or holding temperature applications; and

(7) Is connected to a self-contained condensing unit or to a remote condensing unit.

Commercial hybrid refrigerator, freezer, and refrigerator-freezer means a commercial refrigerator, freezer, or refrigerator-freezer that has two or more chilled and/or frozen compartments that are:

(1) In two or more different equipment families,

(2) Contained in one cabinet, and

(3) Sold as a single unit.

Door angle means:

(1) For equipment with flat doors, the angle between a vertical line and the line formed by the plane of the door, when the equipment is viewed in cross-section; and

(2) For equipment with curved doors, the angle formed between a vertical line and the straight line drawn by connecting the top and bottom points where the display area glass joins the cabinet, when the equipment is viewed in cross-section.

Holding temperature application means a use of commercial refrigeration equipment other than a pull-down temperature application, except a blast chiller or freezer.

Horizontal Closed means equipment with hinged or sliding doors and a door angle greater than or equal to 45°.

Horizontal Open means equipment without doors and an air-curtain angle greater than or equal to 80° from the vertical.

Ice-cream freezer means a commercial freezer that is designed to operate at or below −5 °F (−21 °C) and that the manufacturer designs, markets, or intends for the storing, displaying, or dispensing of ice cream.

Integrated average temperature means the average temperature of all test package measurements taken during the test.

Lighting occupancy sensor means a device which uses passive infrared, ultrasonic, or other motion-sensing technology to automatically turn off or dim lights within the equipment when no motion is detected in the sensor's coverage area for a certain preset period of time.

Lowest application product temperature means the integrated average temperature closest to the specified rating temperature for a given piece of equipment achievable and repeatable, such that the integrated average temperature of a given unit is within ±2 °F of the average of all integrated average temperature values for that basic model.

Night curtain means a device which is temporarily deployed to decrease air exchange and heat transfer between the refrigerated case and the surrounding environment.

Pull-down temperature application means a commercial refrigerator with doors that, when fully loaded with 12 ounce beverage cans at 90 degrees F, can cool those beverages to an average stable temperature of 38 degrees F in 12 hours or less.

Remote condensing unit means a factory-made assembly of refrigerating components designed to compress and liquefy a specific refrigerant that is remotely located from the refrigerated equipment and consists of 1 or more refrigerant compressors, refrigerant condensers, condenser fans and motors, and factory supplied accessories.

Scheduled lighting control means a device which automatically shuts off or dims the lighting in a display case at scheduled times throughout the day.

Self-contained condensing unit means a factory-made assembly of refrigerating components designed to compress and liquefy a specific refrigerant that is an integral part of the refrigerated equipment and consists of 1 or more refrigerant compressors, refrigerant condensers, condenser fans and motors, and factory supplied accessories.

Semivertical Open means equipment without doors and an air-curtain angle greater than or equal to 10° and less than 80° from the vertical.

Service over the counter, self-contained, medium temperature commercial refrigerator or *SOC–SC–M* means a commercial refrigerator—

(1) That operates at temperatures at or above 32 °F;

(2) With a self-contained condensing unit;

(3) Equipped with sliding or hinged doors in the back intended for use by sales personnel, and with glass or other transparent material in the front for displaying merchandise; and

(4) That has a height not greater than 66 inches and is intended to serve as a counter for transactions between sales personnel and customers.

Test package means a packaged material that is used as a standard product temperature-measuring device.

Vertical Closed means equipment with hinged or sliding doors and a door angle less than 45°.

Vertical Open means equipment without doors and an air-curtain angle greater than or equal to 0° and less than 10° from the vertical.

Wedge case means a commercial refrigerator, freezer, or refrigerator-freezer that forms the transition between two regularly shaped display cases.

[70 FR 60414, Oct. 18, 2005, as amended at 71 FR 71369, Dec. 8, 2006; 74 FR 1139, Jan. 9, 2009; 76 FR 12503, Mar. 7, 2011; 77 FR 10318, Feb. 21, 2012; 78 FR 62993, Oct. 23, 2013]

EFFECTIVE DATE NOTE: At 78 FR 79598, Dec. 31, 2013, § 431.62 was amended by revising the definition of ''basic model'', effective Jan. 30, 2014. For the convenience of the user, the revised text is set forth as follows:

§ 431.62 Definitions concerning commercial refrigerators, freezers and refrigerator-freezers.

* * * * *

Basic model means all commercial refrigeration equipment manufactured by one manufacturer within a single equipment class, having the same primary energy source, and that have essentially identical electrical, physical, and functional characteristics that affect energy consumption.

* * * * *

TEST PROCEDURES

§ 431.63 Materials incorporated by reference.

(a) *General.* We incorporate by reference the following standards into subpart C of part 431. The material listed has been approved for incorporation by reference by the Director of the Federal Register in accordance with 5 U.S.C. 552(a) and 1 CFR 51. Any subsequent amendment to a standard by the standard-setting organization will not affect the DOE regulations unless and until amended by DOE. Material is incorporated as it exists on the date of the approval and a notice of any change in the material will be published in the FEDERAL REGISTER. All approved material is available for inspection at the National Archives and Records Administration (NARA). For information on the availability of this material at NARA, call 202–741–6030 or go to *http://www.archives.gov/federal_register/code_of_federal_regulations/ibr_locations.html.* Also, this material is available for inspection at U.S. Department of Energy, Office of Energy Efficiency and Renewable Energy, Building Technologies Program, 6th Floor, 950 L'Enfant Plaza, SW., Washington, DC 20024, 202–586–2945, or go to: *http://www1.eere.energy.gov/buildings/appliance_standards/.* Standards can be obtained from the sources listed below.

(b) *ANSI.* American National Standards Institute, 25 W. 43rd Street, 4th Floor, New York, NY 10036, 212–642–4900, or go to *http://www.ansi.org:*

(1) ANSI /AHAM HRF–1–2004, *Energy, Performance and Capacity of Household Refrigerators, Refrigerator-Freezers and Freezers*, approved July 7, 2004, IBR approved for § 431.64.

(2) AHAM HRF–1–2008 (''HRF–1–2008''), Association of Home Appliance Manufacturers, *Energy and Internal Volume of Refrigerating Appliances* (2008) including *Errata to Energy and Internal Volume of Refrigerating Appliances,* Correction Sheet issued November 17, 2009, IBR approved for § 431.64.

(c) AHRI. Air-Conditioning, Heating, and Refrigeration Institute, 2111 Wilson Blvd., Suite 500, Arlington, VA 22201, (703) 524–8800, *ahri@ahrinet.org,* or *http://www.ahrinet.org/Content/StandardsProgram_20.aspx.*

(1) ARI Standard 1200–2006, *Performance Rating of Commercial Refrigerated Display Merchandisers and Storage Cabinets,* 2006, IBR approved for §§ 431.64 and 431.66.

(2) AHRI Standard 1200 (I–P)–2010 (''AHRI Standard 1200 (I–P)–2010''), *2010 Standard for Performance Rating of Commercial Refrigerated Display Merchandisers and Storage Cabinets,* 2010, IBR approved for §§ 431.64 and 431.66.

[74 FR 1139, Jan. 9, 2009, as amended at 77 FR 10318, Feb. 21, 2012; 78 FR 62993, Oct. 23, 2013]

§ 431.64 Uniform test method for the measurement of energy consumption of commercial refrigerators, freezers, and refrigerator-freezers.

(a) *Scope.* This section provides the test procedures for measuring, pursuant to EPCA, the daily energy consumption in kilowatt hours per day (kWh/day) for a given product category and volume or total display area of commercial refrigerators, freezers, and refrigerator-freezers.

(b) *Testing and calculations.* Manufacturers shall use this paragraph (b) for the purposes of certifying compliance with the applicable energy conservation standards and for all representations of energy efficiency/energy use. For equipment manufactured prior to January 1, 2016, determine the daily energy consumption of each covered commercial refrigerator, freezer, or refrigerator-freezer by conducting the test procedure set forth in the Air-Conditioning and Refrigeration Institute (ARI) Standard 1200–2006, ''Performance Rating of Commercial Refrigerated Display Merchandisers and Storage Cabinets,'' section 3, ''Definitions,'' section 4, ''Test Requirements,'' and section 7, ''Symbols and Subscripts'' (incorporated by reference, see § 431.63). For each commercial refrigerator, freezer, or refrigerator-freezer with a self-contained condensing unit, also use ARI Standard 1200–2006, section 6, ''Rating Requirements for Self-contained Commercial Refrigerated Display Merchandisers and Storage Cabinets.'' For each commercial refrigerator, freezer, or refrigerator-freezer with a remote condensing unit, also use ARI Standard 1200–2006, section 5,

''Rating Requirements for Remote Commercial Refrigerated Display Merchandisers and Storage Cabinets.'' For equipment manufactured on or after January 1, 2016, determine the daily energy consumption of each covered commercial refrigerator, freezer, refrigerator-freezer or ice-cream freezer by conducting the test procedure set forth in the AHRI Standard 1200 (I–P)–2010, section 3, ''Definitions,'' section 4, ''Test Requirements,'' and section 7, ''Symbols and Subscripts'' (incorporated by reference, see § 431.63). For each commercial refrigerator, freezer, or refrigerator-freezer with a self-contained condensing unit, also use AHRI Standard 1200 (I–P)–2010, section 6, ''Rating Requirements for Self-contained Commercial Refrigerated Display Merchandisers and Storage Cabinets.'' For each commercial refrigerator, freezer, or refrigerator-freezer with a remote condensing unit, also use AHRI Standard 1200 (I–P)–2010, section 5, ''Rating Requirements for Remote Commercial Refrigerated Display Merchandisers and Storage Cabinets.''

(1) For display cases manufactured after January 1, 2016 and sold with night curtains installed, the night curtain shall be employed for 6 hours; 3 hours after the start of the first defrost period. Upon the completion of the 6-hour period, the night curtain shall be raised until the completion of the 24-hour test period.

(2) For commercial refrigerators, freezers, and refrigerator-freezers manufactured after January 1, 2016 and sold with lighting occupancy sensors, scheduled lighting controls, or lighting occupancy sensors and scheduled lighting controls installed on the unit, the effect on daily energy consumption will be determined by either a physical test or a calculation method and using the variables that are defined as:

CEC_A is the Alternate Compressor Energy Consumption (kilowatt-hours);

LEC_{sc} is the lighting energy consumption of internal case lights with lighting occupancy sensors and controls deployed (kilowatt-hours);

P_{li} is the rated power of lights when they are fully on (watts);

$P_{li(off)}$ is the power of lights when they are off (watts);

$P_{li(dim)}$ is the power of lights when they are dimmed (watts);

$TDEC_o$ is the total daily energy consumption with lights fully on, as measured by AHRI Standard 1200 (I–P)–2010 (kilowatt-hours);

t_{dim} is the time period which the lights are dimmed due to the use of lighting occupancy sensors or scheduled lighting controls (hours);

$t_{dim,controls}$ is the time case lighting is dimmed due to the use of lighting controls (hours);

$t_{dim,sensors}$ is the time case lighting is dimmed due to the use of lighting occupancy sensors (hours);

t_l is the time period when lights would be on without lighting occupancy sensors and/or scheduled lighting controls (24 hours);

t_{off} is the time period which the lights are off due to the use of lighting occupancy sensors and/or scheduled lighting controls (hours);

$t_{off,controls}$ is the time case lighting is off due to the use of scheduled lighting controls (hours);

$t_{off,sensors}$ is the time case lighting is off due to the use of lighting occupancy sensors (hours); and

t_{sc} is the time period when lighting is fully on with lighting occupancy sensors and scheduled lighting controls enabled (hours).

(i) For both a physical test and a calculation method, determine the estimated time off or dimmed, t_{off} or t_{dim}, as the sum of contributions from lighting occupancy sensors and scheduled lighting controls which dim or turn off lighting, respectively, as shown in the following equation:

$$t_{off} = t_{off,sensors} + t_{off,controls}$$

$$t_{dim} = t_{dim,sensors} + t_{dim,controls}$$

The sum of t_{sc}, t_{off}, and t_{dim} should equal 24 hours and the total time period during which the lights are off or dimmed shall not exceed 10.8 hours. For cases with scheduled lighting controls, the time the case lighting is off and/or dimmed due to scheduled lighting controls ($t_{off,controls}$ and/or $t_{dim,controls}$, as applicable) shall not exceed 8 hours. For cases with lighting occupancy sensors installed, the time the case lighting is off and/or dimmed

due to lighting occupancy sensors ($t_{off,sensors}$ and/or $t_{dim,sensors}$, as applicable) shall not exceed 10.8 hours. For cases with lighting occupancy sensors and scheduled lighting controls installed, the time the case lighting is off and/or dimmed due to lighting occupancy sensors ($t_{off,sensors}$ and/or $t_{dim,sensors}$, as applicable) shall not exceed 2.8 hours and the time the case lighting is off and/or dimmed due to scheduled lighting controls ($t_{off,controls}$ and/or $t_{dim,controls}$, as applicable) shall not exceed 8 hours.

(ii) If using a physical test to determine the daily energy consumption of a commercial refrigerator, freezer, or refrigerator-freezer sold with lighting occupancy sensors, scheduled lighting controls, or lighting occupancy sensors and scheduled lighting controls installed on the unit, turn off the lights for a time period equivalent to t_{off} and dim the lights for a time period equal to t_{dim}. If night curtains are also being tested on the case, the period of lights off and/or dimmed shall begin at the same time that the night curtain is being deployed and shall continue consecutively, in that order, for the appropriate number of hours.

(iii) If using a calculation method to determine the daily energy consumption of a commercial refrigerator, freezer, or refrigerator-freezer sold with lighting occupancy sensors, scheduled lighting controls, or lighting occupancy sensors and scheduled lighting controls installed on the unit—

(A) Calculate the LEC_{sc} using the following equation:

$$LEC_{sc} = \frac{\left((P_{li} \times t_{sc}) + (P_{li(off)} \times t_{off}) + (P_{li(dim)} \times t_{dim})\right)}{(1000)}$$

(B) Calculate the CEC_A using the following equation:

$$CEC_A = 0.75 \times \frac{3.4121 \times \left(LEC_{sc} - P_{li} \times {}^{t_l}/_{1000}\right)}{EER}$$

Where EER represents the energy efficiency ratio from Table 1 in AHRI Standard 1200 (I–P)-2010 (incorporated by reference, see § 431.63) for remote condensing equipment or the values shown in the following table for self-contained equipment:

EER FOR SELF-CONTAINED COMMERCIAL REFRIGERATED DISPLAY MERCHANDISERS AND STORAGE CABINETS

Operating temperature class	EER *Btu/W*
Medium	11
Low	7
Ice Cream	5

(C) For remote condensing commercial refrigerators, freezers, and refrigerator-freezers with lighting occupancy sensors, scheduled lighting controls, or lighting occupancy sensors and scheduled lighting controls installed, the revised compressor energy consumption (CEC_R) shall be the CEC_A added to the compressor energy consumption (CEC) measured in AHRI Standard 1200 (I–P)-2010 (incorporated by reference, see § 431.63). The CDEC for the entire case shall be the sum of the CEC_R and LEC_{sc} (as calculated above) and the fan energy consumption (FEC), anti-condensate energy consumption (AEC), defrost energy consumption (DEC), and condensate evaporator pan energy consumption (PEC) (as measured in AHRI Standard 1200 (I–P)-2010).

(D) For self-contained commercial refrigerators, freezers, and refrigerator-freezers with lighting occupancy sensors, scheduled lighting controls, or lighting occupancy sensors and scheduled lighting controls installed, the TDEC for the entire case shall be the sum of total daily energy consumption as measured by the AHRI Standard 1200 (I–P)-2010 (incorporated by reference, see § 431.63) test with the lights fully on ($TDEC_o$) and CEC_A, less the decrease in lighting energy use due to lighting occupancy sensors and scheduled lighting

controls, as shown in following equation.

$$TDEC = TDEC_o + CEC_A - \left(\left[(P)_{li} \times t_l \right] / 1000 - LEC_{sc} \right)$$

(3) Conduct the testing required in paragraphs (b) introductory text, (b)(1), and (2) of this section, and determine the daily energy consumption, at the applicable integrated average temperature in the following table. The integrated average temperature is determined using the required test method.

Category	Test procedure prior to January 1, 2016	Test procedure on or after January 1, 2016	Integrated average temperatures
(i) Refrigerator with Solid Door(s)	ARI Standard 1200–2006.	AHRI Standard 1200 (I–P)–2010	38 °F (±2 °F).
(ii) Refrigerator with Transparent Door(s)	ARI Standard 1200–2006.	AHRI Standard 1200 (I–P)–2010	38 °F (±2 °F).
(iii) Freezer with Solid Door(s)	ARI Standard 1200–2006.	AHRI Standard 1200 (I–P)–2010	0 °F (±2 °F).
(iv) Freezer with Transparent Door(s)	ARI Standard 1200–2006.	AHRI Standard 1200 (I–P)–2010	0 °F (±2 °F).
(v) Refrigerator-Freezer with Solid Door(s)	ARI Standard 1200–2006.	AHRI Standard 1200 (I–P)–2010	38 °F (±2 °F) for refrigerator compartment. 0 °F (±2 °F) for freezer compartment.
(vi) Commercial Refrigerator with a Self-Contained Condensing Unit Designed for Pull-Down Temperature Applications and Transparent Doors.	ARI Standard 1200–2006.	AHRI Standard 1200 (I–P)–2010	38 °F (±2 °F).
(vii) Ice-Cream Freezer	ARI Standard 1200–2006.	AHRI Standard 1200 (I–P)–2010	−15.0 °F (±2 °F).
(viii) Commercial Refrigerator, Freezer, and Refrigerator-Freezer with a Self-Contained Condensing Unit and without Doors.	ARI Standard 1200–2006.	AHRI Standard 1200 (I–P)–2010	(A) 0 °F (±2 °F) for low temperature applications. (B) 38.0 °F (±2 °F) for medium temperature applications.
(ix) Commercial Refrigerator, Freezer, and Refrigerator-Freezer with a Remote Condensing Unit.	ARI Standard 1200–2006.	AHRI Standard 1200 (I–P)–2010	(A) 0 °F (±2 °F) for low temperature applications. (B) 38.0 °F (±2 °F) for medium temperature applications.

(A) If a piece of commercial refrigeration equipment is not able to be tested at the specified integrated average temperatures of 38 °F (±2 °F), 0 °F (±2 °F), or −15 °F (±2 °F) for refrigerators, freezers, and ice-cream freezers, respectively, the unit may be tested at the lowest application product temperature, as defined in § 431.62. For many pieces of equipment, this will be the lowest thermostat setting. For remote condensing equipment without a thermostat or other means of controlling temperature at the case, the lowest application product temperature shall be that achieved with the adjusted dew point temperature (as defined in AHRI 1200 (I–P)–2010) set to 5 degrees colder than that required to maintain the manufacturer's lowest specified application temperature.

(B) For commercial refrigeration equipment that is also tested in accordance with NSF test procedures (Type I and Type II), integrated average temperatures and ambient conditions used for NSF testing may be used in place of DOE prescribed integrated average temperatures and ambient conditions provided they result in a more stringent test. That is, the measured daily energy consumption of the same unit, when tested at the rating temperatures and/or ambient conditions specified in the DOE test procedure, will be lower than or equal to the measured daily energy consumption of the unit when tested with the rating temperatures or ambient conditions

used for NSF testing. The integrated average temperature measured during the test may be lower than the range specified by the DOE rating temperature specifications, provided in paragraph (b)(3) of this section, but may not exceed the upper value of the specified range. Ambient temperatures and/or humidity values may be higher than those specified in the DOE test procedure.

(4) For equipment manufactured prior to January 1, 2016, determine the volume of each covered commercial refrigerator, freezer, or refrigerator-freezer using the methodology set forth in the ANSI/AHAM HRF–1–2004, ''Energy, Performance and Capacity of Household Refrigerators, Refrigerator-Freezers and Freezers'' (incorporated by reference, see § 431.63), section 3.21, ''Volume,'' sections 4.1 through 4.3, ''Method for Computing Total Refrigerated Volume and Total Shelf Area of Household Refrigerators and Household Wine Chillers,'' and sections 5.1 through 5.3, ''Method for Computing Total Refrigerated Volume and Total Shelf Area of Household Freezers.'' For equipment manufactured on or after January 1, 2016, determine the volume of any covered commercial refrigerator, freezer, refrigerator-freezer, or ice-cream freezer using the method set forth in the HRF–1–2008 (incorporated by reference, see § 431.63), section 3.30, ''Volume,'' and sections 4.1 through 4.3, ''Method for Computing Refrigerated Volume of Refrigerators, Refrigerator-Freezers, Wine Chillers and Freezers.''

[70 FR 60414, Oct. 18, 2005, as amended at 77 FR 10318, Feb. 21, 2012]

ENERGY CONSERVATION STANDARDS

§ 431.66 Energy conservation standards and their effective dates.

(a) In this section—

(1) The term ''AV'' means the adjusted volume (ft^3) (defined as 1.63 × frozen temperature compartment volume (ft^3) + chilled temperature compartment volume (ft^3)) with compartment volumes measured in accordance with the Association of Home Appliance Manufacturers Standard HRF1–1979.

(2) The term ''V'' means the chilled or frozen compartment volume (ft^3) (as defined in the Association of Home Appliance Manufacturers Standard HRF1–1979).

(3) Except as to service over the counter, self-contained, medium temperature commercial refrigerators manufactured on or after January 1, 2012, the term ''TDA'' means the total display area (ft^2) of the case, as defined in the ARI Standard 1200–2006, appendix D (incorporated by reference, see § 431.63).

(b)(1) Except for service over the counter, self-contained, medium temperature commercial refrigerators manufactured on or after January 1, 2012, each commercial refrigerator, freezer and refrigerator-freezer with a self-contained condensing unit designed for holding temperature applications manufactured on or after January 1, 2010, shall have a daily energy consumption (in kilowatt hours per day) that does not exceed the following:

Category	Maximum daily energy consumption (kilowatt hours per day)
Refrigerators with solid doors	0.10V + 2.04.
Refrigerators with transparent doors.	0.12V + 3.34.
Freezers with solid doors	0.40V + 1.38.
Freezers with transparent doors.	0.75V + 4.10.
Refrigerator/freezers with solid doors.	the greater of 0.27AV–0.71 or 0.70.

(2) Each service over the counter, self-contained, medium temperature commercial refrigerator (SOC–SC–M) manufactured on or after January 1, 2012, shall have a total daily energy consumption (in kilowatt hours per day) of not more than 0.6 × TDA + 1.0. As used in the preceding sentence, ''TDA'' means the total display area (ft^2) of the case, as defined in the AHRI Standard 1200 (I–P)–2010, appendix D (incorporated by reference, see § 431.63).

(c) Each commercial refrigerator with a self-contained condensing unit designed for pull-down temperature applications and transparent doors manufactured on or after January 1, 2010, shall have a daily energy consumption (in kilowatt hours per day) of not more than 0.126V + 3.51.

(d) Each commercial refrigerator, freezer, and refrigerator-freezer with a self-contained condensing unit and

without doors; commercial refrigerator, freezer, and refrigerator-freezer with a remote condensing unit; and commercial ice-cream freezer manufactured on or after January 1, 2012, shall have a daily energy consumption (in kilowatt hours per day) that does not exceed the levels specified:

(1) For equipment other than hybrid equipment, refrigerator-freezers or wedge cases:

Equipment category	Condensing unit configuration	Equipment family	Rating temp. (°F)	Operating temp. (°F)	Equipment class designation*	Maximum daily energy consumption (kWh/day)
Remote Condensing Commercial Refrigerators and Commercial Freezers.	Remote (RC)	Vertical Open (VOP).	38 (M)	≥32	VOP.RC.M	0.82 × TDA + 4.07
			0 (L)	<32	VOP.RC.L	2.27 × TDA + 6.85
		Semivertical Open (SVO).	38 (M)	≥32	SVO.RC.M	0.83 × TDA + 3.18
			0 (L)	<32	SVO.RC.L	2.27 × TDA + 6.85
		Horizontal Open (HZO).	38 (M)	≥32	HZO.RC.M	0.35 × TDA + 2.88
			0 (L)	<32	HZO.RC.L	0.57 × TDA + 6.88
		Vertical Closed Transparent (VCT).	38 (M)	≥32	VCT.RC.M	0.22 × TDA + 1.95
			0 (L)	<32	VCT.RC.L	0.56 × TDA + 2.61
		Horizontal Closed Transparent (HCT).	38 (M)	≥32	HCT.RC.M	0.16 × TDA + 0.13
			0 (L)	<32	HCT.RC.L	0.34 × TDA + 0.26
		Vertical Closed Solid (VCS).	38 (M)	≥32	VCS.RC.M	0.11 × V + 0.26
			0 (L)	<32	VCS.RC.L	0.23 × V + 0.54
		Horizontal Closed Solid (HCS).	38 (M)	≥32	HCS.RC.M	0.11 × V + 0.26
			0 (L)	<32	HCS.RC.L	0.23 × V + 0.54
		Service Over Counter (SOC).	38 (M)	≥32	SOC.RC.M	0.51 × TDA + 0.11
			0 (L)	<32	SOC.RC.L	1.08 × TDA + 0.22
Self-Contained Commercial Refrigerators and Commercial Freezers without Doors.	Self-Contained (SC).	Vertical Open (VOP).	38 (M)	≥32	VOP.SC.M	1.74 × TDA + 4.71
			0 (L)	<32	VOP.SC.L	4.37 × TDA + 11.82
		Semivertical Open (SVO).	38 (M)	≥32	SVO.SC.M	1.73 × TDA + 4.59
			0 (L)	<32	SVO.SC.L	4.34 × TDA + 11.51
		Horizontal Open	38 (M)	≥32	HZO.SC.M	0.77 × TDA + 5.55
			0 (L)	<32	HZO.SC.L	1.92 × TDA + 7.08
Commercial Ice-Cream Freezers.	Remote (RC)	Vertical Open (VOP).	−15 (I)	≤−5**	VOP.RC.I	2.89 × TDA + 8.7
		Semivertical Open (SVO).			SVO.RC.I	2.89 × TDA + 8.7
		Horizontal Open (HZO).			HZO.RC.I	0.72 × TDA + 8.74
		Vertical Closed Transparent (VCT).			VCT.RC.I	0.66 × TDA + 3.05
		Horizontal Closed Transparent (HCT).			HCT.RC.I	0.4 × TDA + 0.31
		Vertical Closed Solid (VCS).			VCS.RC.I	0.27 × V + 0.63
		Horizontal Closed Solid (HCS).			HCS.RC.I	0.27 × V + 0.63
		Service Over Counter (SVO).			SOC.RC.I	1.26 × TDA + 0.26
	Self-Contained (SC).	Vertical Open (VOP).			VOP.SC.I	5.55 × TDA + 15.02
		Semivertical Open (SVO).			SVO.SC.I	5.52 × TDA + 14.63
		Horizontal Open (HZO).			HZO.SC.I	2.44 × TDA + 9
		Vertical Closed Transparent (VCT).			VCT.SC.I	0.67 × TDA + 3.29
		Horizontal Closed Transparent (HCT).			HCT.SC.I	0.56 × TDA + 0.43
		Vertical Closed Solid (VCS).			VCS.SC.I	0.38 × V + 0.88
		Horizontal Closed Solid (HCS).			HCS.SC.I	0.38 × V + 0.88

Equipment category	Condensing unit configuration	Equipment family	Rating temp. (°F)	Operating temp. (°F)	Equipment class designation*	Maximum daily energy consumption (kWh/day)
		Service Over Counter (SVO).			SOC.SC.I	1.76 × TDA + 0.36

*The meaning of the letters in this column is indicated in the three columns to the left.
**Ice-cream freezer is defined in 10 CFR 431.62 as a commercial freezer that is designed to operate at or below −5 °F (−21 °C) and that the manufacturer designs, markets, or intends for the storing, displaying, or dispensing of ice cream.

(2) For commercial refrigeration equipment with two or more compartments (*i.e.*, hybrid refrigerators, hybrid freezers, hybrid refrigerator-freezers, and non-hybrid refrigerator-freezers), the maximum daily energy consumption (MDEC) for each model shall be the sum of the MDEC values for all of its compartments. For each compartment, measure the TDA or volume of that compartment, and determine the appropriate equipment class based on that compartment's equipment family, condensing unit configuration, and designed operating temperature. The MDEC limit for each compartment shall be the calculated value obtained by entering that compartment's TDA or volume into the standard equation in paragraph (d)(1) of this section for that compartment's equipment class. Measure the calculated daily energy consumption (CDEC) or total daily energy consumption (TDEC) for the entire case:

(i) For remote condensing commercial hybrid refrigerators, hybrid freezers, hybrid refrigerator-freezers, and non-hybrid refrigerator-freezers, where two or more independent condensing units each separately cool only one compartment, measure the total refrigeration load of each compartment separately according to the ARI Standard 1200–2006 test procedure (incorporated by reference, see § 431.63). Calculate compressor energy consumption (CEC) for each compartment using Table 1 in ARI Standard 1200–2006 using the saturated evaporator temperature for that compartment. The CDEC for the entire case shall be the sum of the CEC for each compartment, fan energy consumption (FEC), lighting energy consumption (LEC), anti-condensate energy consumption (AEC), defrost energy consumption (DEC), and condensate evaporator pan energy consumption (PEC) (as measured in ARI Standard 1200–2006).

(ii) For remote condensing commercial hybrid refrigerators, hybrid freezers, hybrid refrigerator-freezers, and non-hybrid refrigerator-freezers, where two or more compartments are cooled collectively by one condensing unit, measure the total refrigeration load of the entire case according to the ARI Standard 1200–2006 test procedure (incorporated by reference, see § 431.63). Calculate a weighted saturated evaporator temperature for the entire case by:

(A) Multiplying the saturated evaporator temperature of each compartment by the volume of that compartment (as measured in ARI Standard 1200–2006),

(B) Summing the resulting values for all compartments, and

(C) Dividing the resulting total by the total volume of all compartments.

Calculate the CEC for the entire case using Table 1 in ARI Standard 1200–2006 (incorporated by reference, see § 431.63), using the total refrigeration load and the weighted average saturated evaporator temperature. The CDEC for the entire case shall be the sum of the CEC, FEC, LEC, AEC, DEC, and PEC.

(iii) For self-contained commercial hybrid refrigerators, hybrid freezers, hybrid refrigerator-freezers, and non-hybrid refrigerator-freezers, measure the TDEC for the entire case according to the ARI Standard 1200–2006 test procedure (incorporated by reference, see § 431.63).

(3) For remote-condensing and self-contained wedge cases, measure the CDEC or TDEC according to the ARI Standard 1200–2006 test procedure (incorporated by reference, see § 431.63). The MDEC for each model shall be the amount derived by incorporating into the standards equation in paragraph (d)(1) of this section for the appropriate equipment class a value for the TDA that is the product of:

(i) The vertical height of the air-curtain (or glass in a transparent door) and (ii) The largest overall width of the case, when viewed from the front.

[70 FR 60414, Oct. 18, 2005, as amended at 74 FR 1140, Jan. 9, 2009; 78 FR 62993, Oct. 23, 2013]

Subpart D—Commercial Warm Air Furnaces

SOURCE: 69 FR 61939, Oct. 21, 2004, unless otherwise noted.

§ 431.71 Purpose and scope.

This subpart contains energy conservation requirements for commercial warm air furnaces, pursuant to Part C of Title III of the Energy Policy and Conservation Act, as amended, 42 U.S.C. 6311–6317.

[69 FR 61939, Oct. 21, 2004, as amended at 70 FR 60415, Oct. 18, 2005]

§ 431.72 Definitions concerning commercial warm air furnaces.

The following definitions apply for purposes of this subpart D, and of subparts J through M of this part. Any words or terms not defined in this Section or elsewhere in this part shall be defined as provided in Section 340 of the Act.

Basic model means all units of a given type of covered product (or class thereof) manufactured by one manufacturer, having the same primary energy source, and which have essentially identical electrical, physical, and functional (or hydraulic) characteristics that affect energy consumption, energy efficiency, water consumption, or water efficiency.

Commercial warm air furnace means a warm air furnace that is industrial equipment, and that has a capacity (rated maximum input) of 225,000 Btu per hour or more.

Thermal efficiency for a commercial warm air furnace equals 100 percent minus percent flue loss determined using test procedures prescribed under § 431.76.

Warm air furnace means a self-contained oil-fired or gas-fired furnace designed to supply heated air through ducts to spaces that require it and includes combination warm air furnace/electric air conditioning units but does not include unit heaters and duct furnaces.

[69 FR 61939, Oct. 21, 2004, as amended at 76 FR 12503, Mar. 7, 2011]

EFFECTIVE DATE NOTE: At 78 FR 79598, Dec. 31, 2013, § 431.72 was amended by revising the definition of ''basic model'', effective Jan. 30, 2014. For the convenience of the user, the revised text is set forth as follows:

§ 431.72 Definitions concerning commercial warm air furnaces.

* * * * *

Basic model means all commercial warm air furnaces manufactured by one manufacturer within a single equipment class, that have the same nominal input rating and the same primary energy source (e.g. gas or oil) and that do not have any differing physical or functional characteristics that affect energy efficiency.

* * * * *

TEST PROCEDURES

§ 431.75 Materials incorporated by reference.

(a) *General.* DOE incorporates by reference the following test procedures into subpart D of part 431. The materials listed have been approved for incorporation by reference by the Director of the Federal Register in accordance with 5 U.S.C. 552(a) and 1 CFR part 51. Any subsequent amendment to the listed materials by the standard-setting organization will not affect the DOE regulations unless and until such regulations are amended by DOE. Materials are incorporated as they exist on the date of the approval, and a notice of any changes in the materials will be published in the FEDERAL REGISTER. All approved materials are available for inspection at the National Archives and Records Administration (NARA). For information on the availability of this material at NARA, call (202) 741–6030 or go to: *http://www.archives.gov/federal_register/code_of_federal_regulations/ibr_locations.html.* Also, these materials are available for inspection at U.S. Department of Energy, Office of Energy Efficiency and Renewable Energy, Building Technologies Program, 6th Floor, 950 L'Enfant Plaza SW.,

Washington, DC 20024, (202) 586–2945, or go to: *http://www1.eere.energy.gov/buildings/appliance_standards/*. The referenced test procedure standards are listed below by relevant standard-setting organization, along with information on how to obtain copies from those sources.

(b) *ANSI*. American National Standards Institute. 25 W. 43rd Street, 4th Floor, New York, NY 10036, (212) 642–4900, or go to: *http://www.ansi.org*.

(1) ANSI Z21.47–1998, (''ANSI Z21.47–1998''), ''*Gas-Fired Central Furnaces*,'' approved by ANSI on June 9, 1998, IBR approved for § 431.76.

(2) ANSI Z21.47–2006, (''ANSI Z21.47–2006''), ''*Gas-Fired Central Furnaces*,'' approved on July 27, 2006, IBR approved for § 431.76.

(3) Reserved.

(c) *ASHRAE*. American Society of Heating, Refrigerating and Air-Conditioning Engineers Inc., 1791 Tullie Circle, NE., Atlanta, Georgia 30329, (404) 636–8400, or go to: *http://www.ashrae.org*.

(1) ASHRAE Standard 103–1993, sections 7.2.2.4, 7.8, 9.2, and 11.3.7, ''*Method of Testing for Annual Fuel Utilization Efficiency of Residential Central Furnaces and Boilers*,'' approved on June 26, 1993, IBR approved for § 431.76.

(2) [Reserved]

(d) *HI*. Hydronics Institute Division of AHRI, 35 Russo Place, P.O. Box 218, Berkeley Heights, NJ 07922, (703) 600–0350, or go to: *http://www.ahrinet.org/hydronics+institute+section.aspx*.

(1) HI BTS–2000, sections 8.2.2, 11.1.4, 11.1.5, and 11.1.6.2, ''*Method to Determine Efficiency of Commercial Space Heating Boilers*,'' published January 2001, IBR approved for § 431.76.

(2) [Reserved]

(e) *UL*. Underwriters Laboratories, Inc., 333 Pfingsten Road, Northbrook, IL 60062, (847) 272–8800, or go to: *http://www.ul.com*.

(1) UL 727 (UL 727–1994), ''*Standard for Safety Oil-Fired Central Furnaces*,'' published on August 1, 1994, IBR approved for § 431.76.

(2) UL 727 (UL 727–2006), ''*Standard for Safety Oil-Fired Central Furnaces*,'' approved April 7, 2006, IBR approved for § 431.76.

(3) [Reserved]

[77 FR 28987, May 16, 2012]

§ 431.76 Uniform test method for the measurement of energy efficiency of commercial warm air furnaces.

(a) This section covers the test procedures you must follow if, pursuant to EPCA, you are measuring the steady-state thermal efficiency of a gas-fired or oil-fired commercial warm air furnace with a rated maximum input of 225,000 Btu per hour or more. Where this section prescribes use of ANSI Z21.47 or UL 727, (incorporated by reference, see § 431.75), perform only the procedures pertinent to the measurement of the steady-state efficiency. Before May 13, 2013, where you see instructions to use ANSI Z21.47–2006 or UL 727–2006 in this section, you may use the relevant procedures in ANSI Z21.47–1998 or UL 727–1994. On or after May 13, 2013, you must use the relevant procedures in ANSI Z21.47–2006 or UL 727–2006.

(b) *Test setup*—(1) *Test setup for gas-fired commercial warm air furnaces*. The test setup, including flue requirement, instrumentation, test conditions, and measurements for determining thermal efficiency is as specified in sections 1.1 (Scope), 2.1 (General), 2.2 (Basic Test Arrangements), 2.3 (Test Ducts and Plenums), 2.4 (Test Gases), 2.5 (Test Pressures and Burner Adjustments), 2.6 (Static Pressure and Air Flow Adjustments), 2.39 (Thermal Efficiency) (note, this is 2.38 in ANSI Z21.47–1998 (incorporated by reference, see § 431.75)), and 4.2.1 (Basic Test Arrangements for Direct Vent Control Furnaces) of ANSI Z21.47–2006 (incorporated by reference, see § 431.75). The thermal efficiency test must be conducted only at the normal inlet test pressure, as specified in section 2.5.1 of ANSI Z21.47–2006, and at the maximum hourly Btu input rating specified by the manufacturer for the product being tested.

(2) *Test setup for oil-fired commercial warm air furnaces*. The test setup, including flue requirement, instrumentation, test conditions, and measurement for measuring thermal efficiency is as specified in sections 1 (Scope), 2 (Units of Measurement), 3 (Glossary), 37 (General), 38 and 39 (Test Installation), 40 (Instrumentation, except 40.4 and 40.6.2 through 40.6.7, which are not required for the thermal efficiency test), 41 (Initial Test Conditions), 42 (Combustion

Test—Burner and Furnace), 43.2 (Operation Tests), 44 (Limit Control Cutout Test), 45 (Continuity of Operation Test), and 46 (Air Flow, Downflow or Horizontal Furnace Test), of UL 727–2006 (incorporated by reference, see § 431.75). You must conduct a fuel oil analysis for heating value, hydrogen content, carbon content, pounds per gallon, and American Petroleum Institute (API) gravity as specified in section 8.2.2 of HI BTS–2000 (incorporated by reference, see § 431.75). The steady-state combustion conditions, specified in Section 42.1 of UL 727–2006, are attained when variations of not more than 5 °F in the measured flue gas temperature occur for three consecutive readings taken 15 minutes apart.

(c) *Additional test measurements*—(1) *Measurement of flue CO_2 (carbon dioxide) for oil-fired commercial warm air furnaces.* In addition to the flue temperature measurement specified in section 40.6.8 of UL 727–2006, (incorporated by reference, see § 431.75) you must locate one or two sampling tubes within six inches downstream from the flue temperature probe (as indicated on Figure 40.3 of UL 727–2006). If you use an open end tube, it must project into the flue one-third of the chimney connector diameter. If you use other methods of sampling CO_2, you must place the sampling tube so as to obtain an average sample. There must be no air leak between the temperature probe and the sampling tube location. You must collect the flue gas sample at the same time the flue gas temperature is recorded. The CO_2 concentration of the flue gas must be as specified by the manufacturer for the product being tested, with a tolerance of ±0.1 percent. You must determine the flue CO_2 using an instrument with a reading error no greater than ±0.1 percent.

(2) *Procedure for the measurement of condensate for a gas-fired condensing commercial warm air furnace.* The test procedure for the measurement of the condensate from the flue gas under steady state operation must be conducted as specified in sections 7.2.2.4, 7.8, and 9.2 of ASHRAE Standard 103–1993 (incorporated by reference, see § 431.75) under the maximum rated input conditions. You must conduct this condensate measurement for an additional 30 minutes of steady state operation after completion of the steady state thermal efficiency test specified in paragraph (b) of this section.

(d) *Calculation of thermal efficiency*—(1) *Gas-fired commercial warm air furnaces.* You must use the calculation procedure specified in section 2.39, Thermal Efficiency, of ANSI Z21.47–2006 (incorporated by reference, see § 431.75). (Note, this is section 2.38 in ANSI Z21.47–1998 (incorporated by reference, see § 431.75))

(2) *Oil-fired commercial warm air furnaces.* You must calculate the percent flue loss (in percent of heat input rate) by following the procedure specified in sections 11.1.4, 11.1.5, and 11.1.6.2 of the HI BTS–2000 (incorporated by reference, see § 431.75). The thermal efficiency must be calculated as:

Thermal Efficiency (percent) = 100 percent − flue loss (in percent).

(e) *Procedure for the calculation of the additional heat gain and heat loss, and adjustment to the thermal efficiency, for a condensing commercial warm air furnace.* (1) You must calculate the latent heat gain from the condensation of the water vapor in the flue gas, and calculate heat loss due to the flue condensate down the drain, as specified in sections 11.3.7.1 and 11.3.7.2 of ASHRAE Standard 103–1993, (incorporated by reference, see § 431.75), with the exception that in the equation for the heat loss due to hot condensate flowing down the drain in section 11.3.7.2, the assumed indoor temperature of 70 °F and the temperature term T_{OA} must be replaced by the measured room temperature as specified in section 2.2.8 of ANSI Z21.47–2006 (incorporated by reference, see § 431.75).

(2) *Adjustment to the Thermal Efficiency for Condensing Furnace.* You must adjust the thermal efficiency as calculated in paragraph (d)(1) of this section by adding the latent gain, expressed in percent, from the condensation of the water vapor in the flue gas, and subtracting the heat loss (due to the flue condensate down the drain),

also expressed in percent, both as calculated in paragraph (e)(1) of this section, to obtain the thermal efficiency of a condensing furnace.

[77 FR 28987, May 16, 2012]

ENERGY CONSERVATION STANDARDS

§ 431.77 Energy conservation standards and their effective dates.

Each commercial warm air furnace manufactured on or after January 1, 1994, must meet the following energy efficiency standard levels:

(a) For a gas-fired commercial warm air furnace with capacity of 225,000 Btu per hour or more, the thermal efficiency at the maximum rated capacity (rated maximum input) must be not less than 80 percent.

(b) For an oil-fired commercial warm air furnace with capacity of 225,000 Btu per hour or more, the thermal efficiency at the maximum rated capacity (rated maximum input) must be not less than 81 percent.

Subpart E—Commercial Packaged Boilers

SOURCE: 69 FR 61960, Oct. 21, 2004, unless otherwise noted.

§ 431.81 Purpose and scope.

This subpart contains energy conservation requirements for certain commercial packaged boilers, pursuant to Part C of Title III of the Energy Policy and Conservation Act. (42 U.S.C. 6311–6317)

[69 FR 61960, Oct. 21, 2004, as amended at 70 FR 60415, Oct. 18, 2005]

§ 431.82 Definitions concerning commercial packaged boilers.

The following definitions apply for purposes of this subpart E, and of subparts A and J through M of this part. Any words or terms not defined in this section or elsewhere in this part shall be defined as provided in 42 U.S.C. 6311.

Basic model means all units of a given type of covered product (or class thereof) manufactured by one manufacturer, having the same primary energy source, and which have essentially identical electrical, physical, and functional (or hydraulic) characteristics that affect energy consumption, energy efficiency, water consumption, or water efficiency.

Btu/h or *Btu/hr* means British thermal units per hour.

Combustion efficiency for a commercial packaged boiler is determined using test procedures prescribed under § 431.86 and is equal to 100 percent minus percent flue loss (percent flue loss is based on input fuel energy).

Commercial packaged boiler means a type of packaged low pressure boiler that is industrial equipment with a capacity, (rated maximum input) of 300,000 Btu per hour (Btu/hr) or more which, to any significant extent, is distributed in commerce:

(1) For heating or space conditioning applications in buildings; or

(2) For service water heating in buildings but does not meet the definition of ''hot water supply boiler'' in this part.

Condensing boiler means a commercial packaged boiler that condenses part of the water vapor in the flue gases, and that includes a means of collecting and draining this condensate from its heat exchanger section.

Flue condensate means liquid formed by the condensation of moisture in the flue gases.

Manufacturer of a commercial packaged boiler means any person who manufactures, produces, assembles or imports such a boiler, including any person who:

(1) Manufactures, produces, assembles or imports a commercial packaged boiler in its entirety;

(2) Manufactures, produces, assembles or imports a commercial packaged boiler in part, and specifies or approves the boiler's components, including burners or other components produced by others, as for example by specifying such components in a catalogue by make and model number or parts number; or

(3) Is any vendor or installer who sells a commercial packaged boiler that consists of a combination of components that is not specified or approved by a person described in paragraph (1) or (2) of this definition.

Packaged boiler means a boiler that is shipped complete with heating equipment, mechanical draft equipment and

automatic controls; usually shipped in one or more sections and does not include a boiler that is custom designed and field constructed. If the boiler is shipped in more than one section, the sections may be produced by more than one manufacturer, and may be originated or shipped at different times and from more than one location.

Packaged high pressure boiler means a packaged boiler that is:

(1) A steam boiler designed to operate at a steam pressure higher than 15 psi gauge (psig); or

(2) A hot water boiler designed to operate at a water pressure above 160 psig or at a water temperature exceeding 250 °F, or both; or

(3) A boiler that is designed to be capable of supplying either steam or hot water, and designed to operate under the conditions in paragraphs (1) and (2) of this definition.

Packaged low pressure boiler means a packaged boiler that is:

(1) A steam boiler designed to operate at or below a steam pressure of 15 psig; or

(2) A hot water boiler designed to operate at or below a water pressure of 160 psig and a temperature of 250 °F; or

(3) A boiler that is designed to be capable of supplying either steam or hot water, and designed to operate under the conditions in paragraphs (1) and (2) of this definition.

Thermal efficiency for a commercial packaged boiler is determined using test procedures prescribed under § 431.86 and is the ratio of the heat absorbed by the water or the water and steam to the higher heating value in the fuel burned.

[69 FR 61960, Oct. 21, 2004, as amended at 74 FR 36354, July 22, 2009; 76 FR 12503, Mar. 7, 2011]

EFFECTIVE DATE NOTE: At 78 FR 79598, Dec. 31, 2013, § 431.82 was amended by revising the definition of ''basic model'', effective Jan. 30, 2014. For the convenience of the user, the revised text is set forth as follows:

§ 431.82 Definitions concerning commercial packaged boilers.

* * * * *

Basic model means all commercial packaged boilers manufactured by one manufacturer within a single equipment class having the same primary energy source (e.g., gas or oil) and that have essentially identical electrical, physical and functional characteristics that affect energy efficiency.

* * * * *

TEST PROCEDURES

§ 431.85 Materials incorporated by reference.

(a) *General.* We incorporate by reference the following standards into subpart E of part 431. The material listed has been approved for incorporation by reference by the Director of the Federal Register in accordance with 5 U.S.C. 552(a) and 1 CFR part 51. Any subsequent amendment to a standard by the standard-setting organization will not affect the DOE regulations unless and until amended by DOE. Material is incorporated as it exists on the date of the approval and a notice of any change in the material will be published in the FEDERAL REGISTER. All approved material is available for inspection at the National Archives and Records Administration (NARA). For information on the availability of this material at NARA, call 202–741–6030 or go to *http://www.archives.gov/federal_register/code_of_federal_regulations/ibr_locations.html.* Also, this material is available for inspection at U.S. Department of Energy, Office of Energy Efficiency and Renewable Energy, Building Technologies Program, 6th Floor, 950 L'Enfant Plaza, SW., Washington, DC 20024, 202–586–2945, or go to: *http://www1.eere.energy.gov/buildings/appliance_standards/.* Standards can be obtained from the sources listed below.

(b) *HI.* The Gas Appliance Manufacturers Association (GAMA) merged in 2008 with the Air-Conditioning and Refrigeration Institute to become the Air-Conditioning, Heating, and Refrigeration Institute (AHRI). The Hydronics Institute BTS–2000 Testing Standard can be obtained from AHRI. For information on how to obtain this material, contact the Hydronics Institute Section of AHRI, P.O. Box 218, Berkeley Heights, NJ 07922–0218, (866) 408–3831, or go to: *http://www.ahrinet.org/Content/OrderaStandard_573.aspx.*

(1) The Hydronics Institute Division of GAMA BTS–2000 Testing Standard,

(''HI BTS–2000, Rev 06.07''), *Method to Determine Efficiency of Commercial Space Heating Boilers*, Second Edition (Rev 06.07), 2007, IBR approved for § 431.86.

(2) [Reserved]

[74 FR 36354, July 22, 2009]

§ 431.86 Uniform test method for the measurement of energy efficiency of commercial packaged boilers.

(a) *Scope*. This section provides test procedures that must be followed for measuring, pursuant to EPCA, the steady state combustion efficiency and thermal efficiency of a gas-fired or oil-fired commercial packaged boiler. These test procedures apply to packaged low pressure boilers that have rated input capacities of 300,000 Btu/h or more and are ''commercial packaged boilers,'' but do not apply under EPCA to ''packaged high pressure boilers.''

(b) *Definitions*. For purposes of this section, the Department incorporates by reference the definitions specified in Section 3.0 of the HI BTS–2000, Rev 06.07 (incorporated by reference, see § 431.85), with the exception of the definition for the terms ''packaged boiler,'' ''condensing boilers,'' and ''packaged low pressure steam'' and ''hot water boiler.''

(c) *Test Method for Commercial Packaged Boilers—General*. Follow the provisions in this paragraph (c) for all testing of packaged low pressure boilers that are commercial packaged boilers.

(1) *Test Setup*—(i) *Classifications:* If employing boiler classification, you must classify boilers as given in Section 4.0 of the HI BTS–2000, Rev 06.07 (incorporated by reference, see § 431.85).

(ii) *Requirements:* (A) Before March 2, 2012, conduct the combustion efficiency test as given in Section 5.2 (Combustion Efficiency Test) of the HI BTS–2000, Rev 06.07 (incorporated by reference, see § 431.85) for all commercial packaged boiler equipment classes.

(B) On or after March 2, 2012, conduct the thermal efficiency test as given in Section 5.1 (Thermal Efficiency Test) of the HI BTS–2000, Rev 06.07 (incorporated by reference, see § 431.85) for the following commercial packaged boiler equipment classes: Small, gas, hot water; small, gas, steam, all except natural draft; small, gas, steam, natural draft; small, oil, hot water; small, oil, steam; large, gas, steam, all except natural draft; large, gas, steam, natural draft; and large, oil, steam. On or after March 2, 2012, conduct the combustion efficiency test as given in Section 5.2 (Combustion Efficiency Test) of the HI BTS–2000, Rev 06.07 for the following commercial packaged boiler equipment classes: Large, gas-fired, hot water and large, oil-fired, hot water.

(iii) *Instruments and Apparatus:* (A) Follow the requirements for instruments and apparatus in sections 6 (Instruments) and 7 (Apparatus), of the HI BTS–2000, Rev 06.07 (incorporated by reference, see § 431.85), with the exception of section 7.2.5 (flue connection for outdoor boilers) which is replaced with paragraph (c)(1)(iii)(B) of this section:

(B) *Flue Connection for Outdoor Boilers:* Consistent with the procedure specified in section 7.2.1 of HI BTS–2000, Rev 06.07 (incorporated by reference, see § 431.85), the integral venting used in oil-fired and power gas outdoor boilers may be modified only to the extent necessary to permit the boiler's connection to the test flue apparatus for testing.

(iv) *Test Conditions:* Use test conditions from Section 8.0 (excluding 8.6.2) of HI BTS–2000, Rev 06.07 (incorporated by reference, see § 431.85) for combustion efficiency testing. Use all of the test conditions from Section 8.0 of HI BTS–2000, Rev 06.07 for thermal efficiency testing.

(2) *Test Measurements*—(i) *Non-Condensing Boilers:* (A) *Combustion Efficiency*. Measure for combustion efficiency according to sections 9.1 (excluding sections 9.1.1.2.3 and 9.1.2.2.3), 9.2 and 10.2 of the HI BTS–2000, Rev 06.07 (incorporated by reference, see § 431.85).

(B) *Thermal Efficiency*. Measure for thermal efficiency according to sections 9.1 and 10.1 of the HI BTS–2000, Rev 06.07 (incorporated by reference, see § 431.85).

(ii) *Procedure for the Measurement of Condensate for a Condensing Boiler*. For the combustion efficiency test, collect flue condensate as specified in Section 9.2.2 of HI BTS–2000, Rev 06.07 (incorporated by reference, see § 431.85). Measure the condensate from the flue gas under steady state operation for the 30 minute collection period during

the 30 minute steady state combustion efficiency test. Flue condensate mass shall be measured immediately at the end of the 30 minute collection period to prevent evaporation loss from the sample. The humidity of the room shall at no time exceed 80 percent. Determine the mass of flue condensate for the steady state period by subtracting the tare container weight from the total container and flue condensate weight measured at the end of the test period. For the thermal efficiency test, collect and measure the condensate from the flue gas as specified in Section 9.1.1 and 9.1.2 of HI BTS–2000, Rev 06.07.

(iii) *A Boiler That is Capable of Supplying Either Steam or Hot Water*—(A) *Testing*. For purposes of EPCA, before March 2, 2012, measure the combustion efficiency of any size commercial packaged boiler capable of supplying either steam or hot water either by testing the boiler in the steam mode or by testing it in both the steam and hot water modes. On or after March 2, 2012, measure the combustion efficiency and thermal efficiency of a large (fuel input greater than 2,500 kBtu/h) commercial packaged boiler capable of supplying either steam or hot water either by testing the boiler for both efficiencies in steam mode, or by testing the boiler in both steam and hot water modes measuring the thermal efficiency of the boiler in steam mode and the combustion efficiency of the boiler in hot water mode. Measure only the thermal efficiency of a small (fuel input of greater than or equal to 300 kBtu/h and less than or equal to 2,500 kBtu/h) commercial packaged boiler capable of supplying either steam or hot water either by testing the boiler for thermal efficiency only in steam mode or by testing the boiler for thermal efficiency in both steam and hot water modes.

(B) *Rating*. If testing a large boiler only in the steam mode, use the efficiencies determined from such testing to rate the thermal efficiency for the steam mode and the combustion efficiency for the hot water mode. If testing a large boiler in both modes, rate the boiler's efficiency for each mode based on the testing in that mode. If testing a small boiler only in the steam mode, use the efficiencies determined from such testing to rate the thermal efficiency for the steam mode and the hot water mode. If testing a small boiler in both modes, rate the boiler's efficiency for each mode based on the testing in that mode.

(3) *Calculation of Efficiency*—(i) *Combustion Efficiency*. Use the calculation procedure for the combustion efficiency test specified in Section 11.2 (including the specified subsections of 11.1) of the HI BTS–2000, Rev 06.07 (incorporated by reference, *see* § 431.85).

(ii) *Thermal Efficiency*. Use the calculation procedure for the thermal efficiency test specified in Section 11.1 of the HI BTS–2000, Rev 06.07 (incorporated by reference, *see* § 431.85).

[74 FR 36354, July 22, 2009]

ENERGY EFFICIENCY STANDARDS

§ 431.87 Energy conservation standards and their effective dates.

(a) Each commercial packaged boiler manufactured on or after January 1, 1994, and before March 2, 2012, must meet the following energy efficiency standard levels:

(1) For a gas-fired packaged boiler with a capacity (rated maximum input) of 300,000 Btu/h or more, the combustion efficiency at the maximum rated capacity must be not less than 80 percent.

(2) For an oil-fired packaged boiler with a capacity (rated maximum input) of 300,000 Btu/h or more, the combustion efficiency at the maximum rated capacity must be not less than 83 percent.

(b) Each commercial packaged boiler listed in Table 1 to § 431.87 and manufactured on or after the effective date listed in Table 1 of this section, must meet the applicable energy conservation standard in Table 1.

TABLE 1 TO § 431.87—COMMERCIAL PACKAGED BOILER ENERGY CONSERVATION STANDARDS

Equipment type	Subcategory	Size category (input)	Efficiency level—Effective date: March 2, 2012*
Hot Water Commercial Packaged Boilers	Gas-fired	≥300,000 Btu/h and ≤2,500,000 Btu/h.	80.0% E_T
Hot Water Commercial Packaged Boilers	Gas-fired	>2,500,000 Btu/h	82.0% E_C
Hot Water Commercial Packaged Boilers	Oil-fired	≥300,000 Btu/h and ≤2,500,000 Btu/h.	82.0% E_T
Hot Water Commercial Packaged Boilers	Oil-fired	>2,500,000 Btu/h	84.0% E_C
Steam Commercial Packaged Boilers	Gas-fired—all, except natural draft	≥300,000 Btu/h and ≤2,500,000 Btu/h.	79.0% E_T
Steam Commercial Packaged Boilers	Gas-fired—all, except natural draft	>2,500,000 Btu/h	79.0% E_T
Steam Commercial Packaged Boilers	Gas-fired—natural draft	≥300,000 Btu/h and ≤2,500,000 Btu/h.	77.0% E_T
Steam Commercial Packaged Boilers	Gas-fired—natural draft	>2,500,000 Btu/h	77.0% E_T
Steam Commercial Packaged Boilers	Oil-fired	≥300,000 Btu/h and ≤2,500,000 Btu/h.	81.0% E_T
Steam Commercial Packaged Boilers	Oil-fired	>2,500,000 Btu/h	81.0% E_T

*Where E_C is combustion efficiency and E_T is thermal efficiency as defined in § 431.82.

(c) Each commercial packaged boiler listed in Table 2 to § 431.87 and manufactured on or after the effective date listed in Table 2 of this section, must meet the applicable energy conservation standard in Table 2.

TABLE 2 TO § 431.87—COMMERCIAL PACKAGED BOILER ENERGY CONSERVATION STANDARDS

Equipment type	Subcategory	Size category (input)	Efficiency level—Effective date: March 2, 2022*
Steam Commercial Packaged Boilers	Gas-fired—natural draft	≥300,000 Btu/h and ≤2,500,000 Btu/h	79.0% E_T
Steam Commercial Packaged Boilers	Gas-fired—natural draft	>2,500,000 Btu/h	79.0% E_T

*Where E_C is combustion efficiency and E_T is thermal efficiency as defined in § 431.82.

[74 FR 36355, July 22, 2009]

Subpart F—Commercial Air Conditioners and Heat Pumps

SOURCE: 69 FR 61969, Oct. 21, 2004, unless otherwise noted.

§ 431.91 Purpose and scope.

This subpart specifies test procedures and energy conservation standards for certain commercial air conditioners and heat pumps, pursuant to Part C of Title III of the Energy Policy and Conservation Act, as amended, 42 U.S.C. 6311–6317.

[69 FR 61969, Oct. 21, 2004, as amended at 70 FR 60415, Oct. 18, 2005]

§ 431.92 Definitions concerning commercial air conditioners and heat pumps.

The following definitions apply for purposes of this subpart F, and of subparts J through M of this part. Any words or terms not defined in this section or elsewhere in this part shall be defined as provided in 42 U.S.C. 6311.

Basic model means all units of a given type of covered product (or class thereof) manufactured by one manufacturer, having the same primary energy source, and which have essentially identical electrical, physical, and functional (or hydraulic) characteristics that affect energy consumption, energy efficiency, water consumption, or water efficiency.

Coefficient of Performance, or COP means the ratio of the produced cooling effect of an air conditioner or heat pump (or its produced heating effect, depending on the mode of operation) to its net work input, when both the cooling (or heating) effect and the net work input are expressed in identical units of measurement.

Commercial package air-conditioning and heating equipment means air-cooled, water-cooled, evaporatively-cooled, or water source (not including ground water source) electrically operated, unitary central air conditioners and

central air-conditioning heat pumps for commercial application.

Computer Room Air Conditioner means a basic model of commercial package air-conditioning and heating equipment (packaged or split) that is: Used in computer rooms, data processing rooms, or other information technology cooling applications; rated for sensible coefficient of performance (SCOP) and tested in accordance with 10 CFR 431.96, and is not a covered consumer product under 42 U.S.C. 6291(1)–(2) and 6292. A computer room air conditioner may be provided with, or have as available options, an integrated humidifier, temperature, and/or humidity control of the supplied air, and reheating function.

Energy Efficiency Ratio, or EER means the ratio of the produced cooling effect of an air conditioner or heat pump to its net work input, expressed in Btu/watt-hour.

Heat Recovery (in the context of variable refrigerant flow multi-split air conditioners or variable refrigerant flow multi-split heat pumps) means that the air conditioner or heat pump is also capable of providing simultaneous heating and cooling operation, where recovered energy from the indoor units operating in one mode can be transferred to one or more other indoor units operating in the other mode. A variable refrigerant flow multi-split heat recovery heat pump is a variable refrigerant flow multi-split heat pump with the addition of heat recovery capability.

Heating seasonal performance factor, or HSPF means the total heating output of a central air-conditioning heat pump during its normal annual usage period for heating, expressed in Btu's and divided by the total electric power input, expressed in watt-hours, during the same period.

Large commercial package air-conditioning and heating equipment means commercial package air-conditioning and heating equipment that is rated—

(1) At or above 135,000 Btu per hour; and

(2) Below 240,000 Btu per hour (cooling capacity).

Non-standard size means a packaged terminal air conditioner or packaged terminal heat pump with existing wall sleeve dimensions having an external wall opening of less than 16 inches high or less than 42 inches wide, and a cross-sectional area less than 670 square inches.

Packaged terminal air conditioner means a wall sleeve and a separate unencased combination of heating and cooling assemblies specified by the builder and intended for mounting through the wall, and that is industrial equipment. It includes a prime source of refrigeration, separable outdoor louvers, forced ventilation, and heating availability by builder's choice of hot water, steam, or electricity.

Packaged terminal heat pump means a packaged terminal air conditioner that utilizes reverse cycle refrigeration as its prime heat source, that has a supplementary heat source available, with the choice of hot water, steam, or electric resistant heat, and that is industrial equipment.

Seasonal energy efficiency ratio or SEER means the total cooling output of a central air conditioner or central air-conditioning heat pump, expressed in Btu's, during its normal annual usage period for cooling and divided by the total electric power input, expressed in watt-hours, during the same period.

Sensible Coefficient of Performance, or SCOP means the net sensible cooling capacity in watts divided by the total power input in watts (excluding reheaters and humidifiers).

Single package unit means any central air conditioner or central air-conditioning heat pump in which all the major assemblies are enclosed in one cabinet.

Single package vertical air conditioner means air-cooled commercial package air conditioning and heating equipment that—

(1) Is factory-assembled as a single package that—

(i) Has major components that are arranged vertically;

(ii) Is an encased combination of cooling and optional heating components; and

(iii) Is intended for exterior mounting on, adjacent interior to, or through an outside wall;

(2) Is powered by a single-or 3-phase current;

(3) May contain 1 or more separate indoor grilles, outdoor louvers, various ventilation options, indoor free air discharges, ductwork, well plenum, or sleeves; and

(4) Has heating components that may include electrical resistance, steam, hot water, or gas, but may not include reverse cycle refrigeration as a heating means.

Single package vertical heat pump means a single package vertical air conditioner that—

(1) Uses reverse cycle refrigeration as its primary heat source; and

(2) May include secondary supplemental heating by means of electrical resistance, steam, hot water, or gas.

Small commercial package air-conditioning and heating equipment means commercial package air-conditioning and heating equipment that is rated below 135,000 Btu per hour (cooling capacity).

Split system means any central air conditioner or central air conditioning heat pump in which one or more of the major assemblies are separate from the others.

Standard size means a packaged terminal air conditioner or packaged terminal heat pump with wall sleeve dimensions having an external wall opening of greater than or equal to 16 inches high or greater than or equal to 42 inches wide, and a cross-sectional area greater than or equal to 670 square inches.

Variable Refrigerant Flow Multi-Split Air Conditioner means a unit of commercial package air-conditioning and heating equipment that is configured as a split system air conditioner incorporating a single refrigerant circuit, with one or more outdoor units, at least one variable-speed compressor or an alternate compressor combination for varying the capacity of the system by three or more steps, and multiple indoor fan coil units, each of which is individually metered and individually controlled by an integral control device and common communications network and which can operate independently in response to multiple indoor thermostats. Variable refrigerant flow implies three or more steps of capacity control on common, inter-connecting piping.

Variable Refrigerant Flow Multi-Split Heat Pump means a unit of commercial package air-conditioning and heating equipment that is configured as a split system heat pump that uses reverse cycle refrigeration as its primary heating source and which may include secondary supplemental heating by means of electrical resistance, steam, hot water, or gas. The equipment incorporates a single refrigerant circuit, with one or more outdoor units, at least one variable-speed compressor or an alternate compressor combination for varying the capacity of the system by three or more steps, and multiple indoor fan coil units, each of which is individually metered and individually controlled by a control device and common communications network and which can operate independently in response to multiple indoor thermostats. Variable refrigerant flow implies three or more steps of capacity control on common, inter-connecting piping.

Very large commercial package air-conditioning and heating equipment means commercial package air-conditioning and heating equipment that is rated—

(1) At or above 240,000 Btu per hour; and

(2) Below 760,000 Btu per hour (cooling capacity).

[69 FR 61969, Oct. 21, 2004, as amended at 70 FR 60415, Oct. 18, 2005; 73 FR 58828, Oct. 7, 2008; 74 FR 12073, Mar. 23, 2009; 76 FR 12503, Mar. 7, 2011; 77 FR 28988, May 16, 2012]

EFFECTIVE DATE NOTE: At 78 FR 79598, Dec. 31, 2013, § 431.92 was amended by revising the definition of ''basic model'', effective Jan. 30, 2014. For the convenience of the user, the revised text is set forth as follows:

§ 431.92 Definitions concerning commercial air conditioners and heat pumps.

* * * * *

Basic model includes:

(1) *Packaged terminal air conditioner (PTAC)* or packaged terminal heat pump (PTHP) means all units manufactured by one manufacturer within a single equipment class, having the same primary energy source (e.g., electric or gas), and which have the same or comparable compressors, same or comparable heat exchangers, and same or comparable air moving systems that have a cooling capacity within 300 Btu/h of one another.

(2) *Small, large, and very large air-cooled or water-cooled commercial package air conditioning and heating equipment* means all units

manufactured by one manufacturer within a single equipment class, having the same or comparably performing compressor(s), heat exchangers, and air moving system(s) that have a common ''nominal'' cooling capacity.

(3) *Single package vertical units* means all units manufactured by one manufacturer within a single equipment class, having the same primary energy source (e.g., electric or gas), and which have the same or comparably performing compressor(s), heat exchangers, and air moving system(s) that have a rated cooling capacity within 1500 Btu/h of one another.

(4) *Computer room air conditioners* means all units manufactured by one manufacturer within a single equipment class, having the same primary energy source (e.g., electric or gas), and which have the same or comparably performing compressor(s), heat exchangers, and air moving system(s) that have a common ''nominal'' cooling capacity.

(5) *Variable refrigerant flow systems* means all units manufactured by one manufacturer within a single equipment class, having the same primary energy source (e.g., electric or gas), and which have the same or comparably performing compressor(s) that have a common ''nominal'' cooling capacity and the same heat rejection medium (e.g., air or water) (includes VRF water source heat pumps).

(6) *Small, large, and very large water source heat pump* means all units manufactured by one manufacturer within a single equipment class, having the same primary energy source (e.g., electric or gas), and which have the same or comparable compressors, same or comparable heat exchangers, and same or comparable ''nominal'' capacity.

* * * * *

TEST PROCEDURES

§ 431.95 Materials incorporated by reference.

(a) *General.* DOE incorporates by reference the following test procedures into subpart F of part 431. The materials listed have been approved for incorporation by reference by the Director of the Federal Register in accordance with 5 U.S.C. 552(a) and 1 CFR part 51. Any subsequent amendment to the listed materials by the standard-setting organization will not affect the DOE regulations unless and until such regulations are amended by DOE. Materials are incorporated as they exist on the date of the approval, and a notice of any changes in the materials will be published in the FEDERAL REGISTER. All approved materials are available for inspection at the National Archives and Records Administration (NARA). For information on the availability of this material at NARA, call (202) 741–6030, or go to: *http://www.archives.gov/federal_register/code_of_federal_regulations/ibr_locations.html.* Also, this material is available for inspection at U.S. Department of Energy, Office of Energy Efficiency and Renewable Energy, Building Technologies Program, 6th Floor, 950 L'Enfant Plaza SW., Washington, DC 20024, (202) 586–2945, or go to: *http://www1.eere.energy.gov/buildings/appliance_standards/.* The referenced test procedure standards are listed below by relevant standard-setting organization, along with information on how to obtain copies from those sources.

(b) *AHRI.* Air-Conditioning, Heating, and Refrigeration Institute, 2111 Wilson Blvd., Suite 500, Arlington, VA 22201, (703) 524–8800, or go to: *http://www.ahrinet.org.*

(1) ARI Standard 210/240–2003, ''2003 Standard for *Unitary Air-Conditioning & Air-Source Heat Pump Equipment,*'' published in 2003 (AHRI 210/240–2003), IBR approved for § 431.96.

(2) ANSI/AHRI Standard 210/240–2008, ''2008 Standard for *Performance Rating of Unitary Air-Conditioning & Air-Source Heat Pump Equipment,*'' approved by ANSI on October 27, 2011 and updated by addendum 1 in June 2011 and addendum 2 in March 2012 (AHRI 210/240–2008), IBR approved for § 431.96.

(3) ARI Standard 310/380–2004, ''*Standard for Packaged Terminal Air-Conditioners and Heat Pumps,*'' published September 2004 (AHRI 310/380–2004), IBR approved for § 431.96.

(4) ARI Standard 340/360–2004, ''2004 Standard for *Performance Rating of Commercial and Industrial Unitary Air-Conditioning and Heat Pump Equipment,*'' published in 2004 (AHRI 340/360–2004), IBR approved for § 431.96.

(5) ANSI/AHRI Standard 340/360–2007, ''2007 Standard for *Performance Rating of Commercial and Industrial Unitary Air-Conditioning and Heat Pump Equipment,*'' approved by ANSI on October 27, 2011 and updated by addendum 1 in December 2010 and addendum 2 in June 2011 (AHRI 340/360–2007), IBR approved for § 431.96.

(6) ANSI/AHRI Standard 390–2003, ''2003 Standard for *Performance Rating of Single Package Vertical Air-Conditioners and Heat Pumps*,'' dated 2003, (AHRI 390–2003), IBR approved for § 431.96.

(7) ANSI/AHRI Standard 1230–2010, ''2010 Standard for *Performance Rating of Variable Refrigerant Flow (VRF) Multi-Split Air-Conditioning and Heat Pump Equipment*,'' approved August 2, 2010 and updated by addendum 1 in March 2011 (AHRI 1230–2010), IBR approved for § 431.96.

(8) [Reserved]

(c) *ASHRAE*. American Society of Heating, Refrigerating and Air-Conditioning Engineers, 1791 Tullie Circle, NE., Atlanta, Georgia 30329, (404) 636–8400, or go to: *http://www.ashrae.org*.

(1) ASHRAE Standard 127–2007, ''*Method of Testing for Rating Computer and Data Processing Room Unitary Air Conditioners*,'' approved on June 28, 2007, (ASHRAE 127–2007), IBR approved for § 431.96.

(2) [Reserved]

(d) *ISO*. International Organization for Standardization, 1, ch. De la Voie-Creuse, Case Postale 56, CH–1211 Geneva 20, Switzerland, +41 22 749 01 11 or go to: *http://www.iso.ch/*.

(1) ISO Standard 13256–1, ''*Water-source heat pumps—Testing and rating for performance—Part 1: Water-to-air and brine-to-air heat pumps*,'' approved 1998, IBR approved for § 431.96.

(2) [Reserved]

[77 FR 28989, May 16, 2012]

§ 431.96 Uniform test method for the measurement of energy efficiency of commercial air conditioners and heat pumps.

(a) *Scope*. This section contains test procedures for measuring, pursuant to EPCA, the energy efficiency of any small, large, or very large commercial package air-conditioning and heating equipment, packaged terminal air conditioners and packaged terminal heat pumps, computer room air conditioners, variable refrigerant flow systems, and single package vertical air conditioners and single package vertical heat pumps.

(b) *Testing and calculations*. (1) Determine the energy efficiency of each covered product by conducting the test procedure(s) listed in the rightmost column of Table 1 of this section, that apply to the energy efficiency descriptor for that product, category, and cooling capacity, until compliance with this test procedure version is no longer required per the date shown in the 5th most column from the left of Table 1 of this section.

TABLE 1 TO § 431.96—TEST PROCEDURES FOR COMMERCIAL AIR CONDITIONERS AND HEAT PUMPS

Equipment type	Category	Cooling capacity	Energy efficiency descriptor	Test procedure required for compliance until	Use tests, conditions, and procedures [1] in
Small Commercial Packaged Air-Conditioning and Heating Equipment.	Air-Cooled, 3-Phase, AC and HP.	<65,000 Btu/h	SEER and HSPF	May 13, 2013	ARI 210/240–2003.
		≥65,000 Btu/h and <135,000 Btu/h.	EER and COP	May 13, 2013	ARI 340/360–2004.
	Air-Cooled AC and HP.				
	Water-Cooled and Evaporatively-Cooled AC.	<65,000 Btu/h	EER	May 13, 2013	ARI 210/240–2003.
		≥65,000 Btu/h and <135,000 Btu/h.	EER	May 13, 2013	ARI 340/360–2004.
	Water-Source HP	<135,000 Btu/h	EER and COP	May 13, 2013	ISO Standard 13256–1 (1998).
Large Commercial Packaged Air-Conditioning and Heating Equipment.	Air-Cooled AC and HP.	≥135,000 Btu/h and <240,000 Btu/h.	EER and COP	May 13, 2013	ARI 340/360–2004.
	Water-Cooled and Evaporatively-Cooled AC.	≥135,000 Btu/h and <240,000 Btu/h.	EER	May 13, 2013	ARI 340/360–2004.
Very Large Commercial Packaged Air-Conditioning and Heating Equipment.	Air-Cooled AC and HP.	≥240,000 Btu/h and <760,000 Btu/h.	EER and COP	May 13, 2013	ARI 340/360–2004.
	Water-Cooled and Evaporatively-Cooled AC.	≥240,000 Btu/h and <760,000 Btu/h.	EER	May 13, 2013	ARI 340/360–2004.

TABLE 1 TO § 431.96—TEST PROCEDURES FOR COMMERCIAL AIR CONDITIONERS AND HEAT PUMPS—Continued

Equipment type	Category	Cooling capacity	Energy efficiency descriptor	Test procedure required for compliance until	Use tests, conditions, and procedures [1] in
Packaged Terminal Air Conditioners and Heat Pumps.	AC and HP	<760,000 Btu/h	EER and COP	May 13, 2013	AHRI 310/380–2004.

[1] Incorporated by reference, see § 431.95.

(2) On or after the compliance dates listed in Table 2 of this section, determine the energy efficiency of each type of covered equipment by conducting the test procedure(s) listed in the rightmost column of Table 2 of this section along with any additional testing provisions set forth in paragraphs (c), (d), and (e) of this section, that apply to the energy efficiency descriptor for that equipment, category, and cooling capacity. Note, the omitted sections of the test procedures listed in the rightmost column of Table 1 of this section shall not be used.

TABLE 2 TO § 431.96—TEST PROCEDURES FOR COMMERCIAL AIR CONDITIONERS AND HEAT PUMPS

Equipment type	Category	Cooling capacity	Energy efficiency descriptor	Compliance with test procedure required on or after	Use tests, conditions, and procedures [1] in
Small Commercial Packaged Air-Conditioning and Heating Equipment.	Air-Cooled, 3-Phase, AC and HP.	<65,000 Btu/h	SEER and HSPF	May 13, 2013	AHRI 210/240–2008 (omit section 6.5). AHRI 340/360–2007 (omit section 6.3).
	Air-Cooled AC and HP.	≥65,000 Btu/h and <135,000 Btu/h.	EER and COP	May 13, 2013	
	Water-Cooled and Evaporatively-Cooled AC.	<65,000 Btu/h	EER	May 13, 2013	AHRI 210/240–2008 (omit section 6.5). AHRI 340/360–2007 (omit section 6.3).
		≥65,000 Btu/h and <135,000 Btu/h.	EER	May 13, 2013	
	Water-Source HP	<135,000 Btu/h	EER and COP	May 13, 2013	ISO Standard 13256–1 (1998).
Large Commercial Packaged Air-Conditioning and Heating Equipment.	Air-Cooled AC and HP.	≥135,000 Btu/h and <240,000 Btu/h.	EER and COP	May 13, 2013	AHRI 340/360–2007 (omit section 6.3). AHRI 340/360–2007 (omit section 6.3).
	Water-Cooled and Evaporatively-Cooled AC.	≥135,000 Btu/h and <240,000 Btu/h.	EER	May 13, 2013	
Very Large Commercial Packaged Air-Conditioning and Heating Equipment.	Air-Cooled AC and HP.	≥240,000 Btu/h and <760,000 Btu/h.	EER and COP	May 13, 2013	AHRI 340/360–2007 (omit section 6.3). AHRI 340/360–2007 (omit section 6.3).
	Water-Cooled and Evaporatively-Cooled AC.	≥240,000 Btu/h and <760,000 Btu/h.	EER	May 13, 2013	
Packaged Terminal Air Conditioners and Heat Pumps.	AC and HP	<760,000 Btu/h	EER and COP	May 13, 2013	AHRI 310/380–2004 (omit section 5.6).
Computer Room Air Conditioners.	AC	<65,000 Btu/h	SCOP	October 29, 2012.	ASHRAE 127–2007 (omit section 5.11). ASHRAE 127–2007 (omit section 5.11).
		<65,000 Btu/h and <760,000 Btu/h.	SCOP	May 13, 2013	
Variable Refrigerant Flow Multi-split Systems.	AC	<760,000 Btu/h	EER and COP	May 13, 2013	AHRI 1230–2010 (omit sections 5.1.2 and 6.6).
Variable Refrigerant Flow Multi-split Systems, Air-cooled.	HP	<760,000 Btu/h	EER and COP	May 13, 2013	AHRI 1230–2010 (omit sections 5.1.2 and 6.6).

TABLE 2 TO § 431.96—TEST PROCEDURES FOR COMMERCIAL AIR CONDITIONERS AND HEAT PUMPS—Continued

Equipment type	Category	Cooling capacity	Energy efficiency descriptor	Compliance with test procedure required on or after	Use tests, conditions, and procedures [1] in
Variable Refrigerant Flow Multi-split Systems, Water-source.	HP	<17,000 Btu/h	EER and COP	October 29, 2012.	AHRI 1230–2010 (omit sections 5.1.2 and 6.6).
Variable Refrigerant Flow Multi-split Systems, Water-source.	HP	≥17,000 Btu/h and <760,000 Btu/h.	EER and COP	May 13, 2013	AHRI 1230–2010 (omit sections 5.1.2 and 6.6).
Single Package Vertical Air Conditioners and Single Package Vertical Heat Pumps.	AC and HP	<760,000 Btu/h	EER and COP	July 16, 2012	AHRI 390–2003 (omit section 6.4).

[1] Incorporated by reference, see § 431.95.

(c) *Optional break-in period for tests conducted using AHRI 210/240–2008, AHRI 340/360–2007, AHRI 390–2003, AHRI 1230–2010, and ASHRAE 127–2007.* Manufacturers may optionally specify a ''break-in'' period, not to exceed 20 hours, to operate the equipment under test prior to conducting the test method specified by AHRI 210/240–2008, AHRI 340/360–2007, AHRI 390–2003, AHRI 1230–2010, or ASHRAE 127–2007 (incorporated by reference, see § 431.95). A manufacturer who elects to use an optional compressor break-in period in its certification testing should record this information (including the duration) in the test data underlying the certified ratings that is required to be maintained under 10 CFR 429.71.

(d) *Refrigerant line length corrections for tests conducted using AHRI 1230–2010.* For test setups where it is physically impossible for the laboratory to use the required line length listed in Table 3 of the AHRI 1230–2010 (incorporated by reference, see § 431.95), then the actual refrigerant line length used by the laboratory may exceed the required length and the following correction factors are applied:

Piping length beyond minimum, X (ft)	Piping length beyond minimum, Y (m)	Cooling capacity correction %
0>X ≤20	0>Y ≤6.1	1
20>X ≤40	6.1>Y ≤12.2	2
40>X ≤60	12.2>Y ≤18.3	3
60>X ≤80	18.3>Y ≤24.4	4
80>X ≤100	24.4>Y ≤30.5	5
100 >X ≤120	30.5>Y ≤36.6	6

(e) *Additional provisions for equipment set-up.* The only additional specifications that may be used in setting up the basic model for test are those set forth in the installation and operation manual shipped with the unit. Each unit should be set up for test in accordance with the manufacturer installation and operation manuals. Paragraphs (e)(1) through (3) of this section provide specifications for addressing key information typically found in the installation and operation manuals.

(1) If a manufacturer specifies a range of superheat, sub-cooling, and/or refrigerant pressure in its installation and operation manual for a given basic model, any value(s) within that range may be used to determine refrigerant charge or mass of refrigerant, unless the manufacturer clearly specifies a rating value in its installation and operation manual, in which case the specified rating value shall be used.

(2) The air flow rate used for testing must be that set forth in the installation and operation manuals being shipped to the commercial customer with the basic model and clearly identified as that used to generate the DOE performance ratings. If a rated air flow value for testing is not clearly identified, a value of 400 standard cubic feet per minute (scfm) per ton shall be used.

(3) For VRF systems, the test set-up and the fixed compressor speeds (*i.e.*, the maximum, minimum, and any intermediate speeds used for testing) should be recorded and maintained as

part of the test data underlying the certified ratings that is required to be maintained under 10 CFR 429.71.

(f) *Manufacturer involvement in assessment or enforcement testing for variable refrigerant flow systems.* A manufacturer's representative will be allowed to witness assessment and/or enforcement testing for VRF systems. The manufacturer's representative will be allowed to inspect and discuss set-up only with a DOE representative and adjust only the modulating components during testing in the presence of a DOE representative that are necessary to achieve steady-state operation. Only previously documented specifications for set-up as specified under paragraphs (d) and (e) of this section will be used.

[77 FR 28989, May 16, 2012]

ENERGY EFFICIENCY STANDARDS

§ 431.97 Energy efficiency standards and their compliance dates.

(a) All basic models of commercial package air-conditioning and heating equipment must be tested for performance using the applicable DOE test procedure in § 431.96, be compliant with the applicable standards set forth in paragraphs (b) through (f) of this section, and be certified to the Department under 10 CFR part 429.

(b) Each commercial air conditioner or heat pump (not including single package vertical air conditioners and single package vertical heat pumps, packaged terminal air conditioners and packaged terminal heat pumps, computer room air conditioners, and variable refrigerant flow systems) manufactured on and after the compliance date listed in the corresponding table must meet the applicable minimum energy efficiency standard level(s) set forth in Tables 1, 2, and 3 of this section.

TABLE 1 TO § 431.97—MINIMUM COOLING EFFICIENCY STANDARDS FOR AIR-CONDITIONING AND HEATING EQUIPMENT

[Not including single package vertical air conditioners and single package vertical heat pumps, packaged terminal air conditioners and packaged terminal heat pumps, computer room air conditioners, and variable refrigerant flow multi-split air conditioners and heat pumps]

Equipment type	Cooling capacity	Sub-category	Heating type	Efficiency level	Compliance date: products manufactured on and after . . .
Small Commercial Packaged Air-Conditioning and Heating Equipment (Air-Cooled, 3 Phase)	<65,000 Btu/h	AC	All	SEER = 13	June 16, 2008.
		HP	All	SEER = 13	June 16, 2008.
Small Commercial Packaged Air-Conditioning and Heating Equipment (Air-Cooled)	≥65,000 Btu/h and <135,000 Btu/h.	AC	No Heating or Electric Resistance Heating.	EER = 11.2	January 1, 2010.
			All Other Types of Heating.	EER = 11.0	January 1, 2010.
		HP	No Heating or Electric Resistance Heating.	EER = 11.0	January 1, 2010.
			All Other Types of Heating.	EER = 10.8	January 1, 2010.
Large Commercial Packaged Air-Conditioning and Heating Equipment (Air-Cooled)	≥135,000 Btu/h and <240,000 Btu/h.	AC	No Heating or Electric Resistance Heating.	EER = 11.0	January 1, 2010.
			All Other Types of Heating.	EER = 10.8	January 1, 2010.
Heating Equipment (Air-Cooled).	>240,000 Btu/h	HP	No Heating or Electric Resistance heating.	EER = 10.6	January 1, 2010.
			All Other Types of Heating.	EER = 10.4	January 1, 2010.
Very Large Commercial Packaged Air-Conditioning and Heating Equipment (Air-Cooled)	≥240,000 Btu/h and <760,000 Btu/h.	AC	No Heating or Electric Resistance Heating.	EER = 10.0	January 1, 2010.
			All Other Types of Heating.	EER = 9.8	January 1, 2010.
		HP	No Heating or Electric Resistance Heating.	EER = 9.5	January 1, 2010.
			All Other Types of Heating.	EER = 9.3	January 1, 2010.

TABLE 1 TO § 431.97—MINIMUM COOLING EFFICIENCY STANDARDS FOR AIR-CONDITIONING AND HEATING EQUIPMENT—Continued

[Not including single package vertical air conditioners and single package vertical heat pumps, packaged terminal air conditioners and packaged terminal heat pumps, computer room air conditioners, and variable refrigerant flow multi-split air conditioners and heat pumps]

Equipment type	Cooling capacity	Sub-category	Heating type	Efficiency level	Compliance date: products manufactured on and after . . .
Small Commercial Packaged Air-Conditioning and Heating Equipment (Water-Cooled, Evaporatively-Cooled, and Water-Source).	<17,000 Btu/h	AC	All	EER = 12.1	October 29, 2003.
	≥17,000 Btu/h and <65,000 Btu/h.	HP	All	EER = 11.2	October 29, 2003.
		AC	All	EER = 12.1	October 29, 2003.
		HP	All	EER = 12.0	October 29, 2003.
	≥65,000 Btu/h and <135,000 Btu/h.	AC	No Heating or Electric Resistance Heating.	EER = 11.5	October 29, 2003.[1]
			All Other Types of Heating.	EER = 11.3	October 29, 2003.[1]
		HP	All	EER = 12.0	October 29, 2003.[1]
Large Commercial Packaged Air-Conditioning and Heating Equipment (Water-Cooled, Evaporatively-Cooled, and Water-Source).	≥135,000 Btu/h and <240,000. Btu/h	AC	All	EER = 11.0	October 29, 2004.[2]
		HP	All	EER = 11.0	October 29, 2004.[2]
Very Large Commercial Packaged Air-Conditioning and Heating Equipment (Water-Cooled, Evaporatively-Cooled, and Water-Source).	≥240,000 Btu/h and <760,000 Btu/h.	AC	No Heating or Electric Resistance Heating.	EER = 11.0	January 10, 2011.[2]
			All Other Types of Heating.	EER = 10.8	January 10, 2011.[2]
		HP	No Heating or Electric Resistance Heating.	EER = 11.0	January 10, 2011.[2]
			All Other Types of Heating.	EER = 10.8	January 10, 2011.[2]

[1] And manufactured before June 1, 2013. See Table 3 of this section for updated efficiency standards.
[2] And manufactured before June 1, 2014. See Table 3 of this section for updated efficiency standards.

TABLE 2 TO § 431.97—MINIMUM HEATING EFFICIENCY STANDARDS FOR AIR-CONDITIONING AND HEATING EQUIPMENT

[Heat pumps]

Equipment type	Cooling capacity	Efficiency level	Compliance date: Products manufactured on and after . . .
Small Commercial Packaged Air-Conditioning and Heating Equipment (Air-Cooled, 3 Phase).	<65,000 Btu/h	HSPF = 7.7	June 16, 2008.
Small Commercial Packaged Air-Conditioning and Heating Equipment (Air-Cooled).	≥65,000 Btu/h and <135,000 Btu/h	COP = 3.3	January 1, 2010.
Large Commercial Packaged Air-Conditioning and Heating Equipment (Air-Cooled).	≥135,000 Btu/h and <240,000 Btu/h	COP = 3.2	January 1, 2010.
Very Large Commercial Packaged Air-Conditioning and Heating Equipment (Air-Cooled).	≥240,000 Btu/h and <760,000 Btu/h	COP = 3.2	January 1, 2010.
Small Commercial Packaged Air-Conditioning and Heating Equipment (Water-Source).	<135,000 Btu/h	COP = 4.2	October 29, 2003.

TABLE 3 TO § 431.97—UPDATES TO THE MINIMUM COOLING EFFICIENCY STANDARDS FOR WATER-COOLED AND EVAPORATIVELY-COOLED AIR-CONDITIONING AND HEATING EQUIPMENT

Equipment type	Cooling capacity	Heating type	Efficiency level	Compliance date: Products manufactured on and after . . .
Small Commercial Packaged Air-Conditioning and Heating Equipment (Water-Cooled).	≥65,000 Btu/h and <135,000 Btu/h.	No Heating or Electric Resistance Heating.	EER = 12.1	June 1, 2013.
		All Other Types of Heating	EER = 11.9	June 1, 2013.
Large Commercial Packaged Air-Conditioning and Heating Equipment (Water-Cooled).	≥135,000 Btu/h and <240,000 Btu/h.	No Heating or Electric Resistance Heating.	EER = 12.5	June 1, 2014.
		All Other Types of Heating	EER = 12.3	June 1, 2014.

TABLE 3 TO § 431.97—UPDATES TO THE MINIMUM COOLING EFFICIENCY STANDARDS FOR WATER-COOLED AND EVAPORATIVELY-COOLED AIR-CONDITIONING AND HEATING EQUIPMENT—Continued

Equipment type	Cooling capacity	Heating type	Efficiency level	Compliance date: Products manufactured on and after . . .
Very Large Commercial Packaged Air-Conditioning and Heating Equipment (Water-Cooled).	≥240,000 Btu/h and <760,000 Btu/h.	No Heating or Electric Resistance Heating.	EER = 12.4	June 1, 2014.
		All Other Types of Heating	EER = 12.2	June 1, 2014.
Small Commercial Packaged Air-Conditioning and Heating Equipment (Evaporatively-Cooled).	≥65,000 Btu/h and <135,000 Btu/h.	No Heating or Electric Resistance Heating.	EER = 12.1	June 1, 2013.
		All Other Types of Heating	EER = 11.9	June 1, 2013.
Large Commercial Packaged Air-Conditioning and Heating Equipment (Evaporatively-Cooled).	≥135,000 Btu/h and <240,000 Btu/h.	No Heating or Electric Resistance Heating.	EER = 12.0	June 1, 2014.
		All Other Types of Heating	EER = 11.8	June 1, 2014.
Very Large Commercial Packaged Air-Conditioning and Heating Equipment (Evaporatively-Cooled).	≥240,000 Btu/h and <760,000 Btu/h.	No Heating or Electric Resistance Heating.	EER = 11.9	June 1, 2014.
		All Other Types of Heating	EER = 11.7	June 1, 2014.

(c) Each packaged terminal air conditioner (PTAC) and packaged terminal heat pump (PTHP) manufactured on or after January 1, 1994, and before October 8, 2012 (for standard size PTACs and PTHPs) and before October 7, 2010 (for non-standard size PTACs and PTHPs) must meet the applicable minimum energy efficiency standard level(s) set forth in Table 4 of this section. Each PTAC and PTHP manufactured on or after October 8, 2012 (for standard size PTACs and PTHPs) and on or after October 7, 2010 (for non-standard size PTACs and PTHPs) must meet the applicable minimum energy efficiency standard level(s) set forth in Table 5 of this section.

TABLE 4 TO § 431.97—MINIMUM EFFICIENCY STANDARDS FOR PTAC AND PTHP

Equipment type	Cooling capacity	Efficiency level	Compliance date: products manufactured on and after . . .
PTAC	<7,000 Btu/h	EER = 8.88	January 1, 1994.
	≥7,000 Btu/h and <15,000 Btu/h.	EER = 10.0—(0.16 × Cap [1])	January 1, 1994.
	≥15,000 Btu/h	EER = 7.6	January 1, 1994.
PTHP	<7,000 Btu/h	EER = 8.88 COP = 2.72	January 1, 1994.
	≥7,000 Btu/h and <15,000 Btu/h.	EER = 10.0—(0.16 × Cap [1]) COP = 1.3 + (0.16 × EER [2])	January 1, 1994.
	≥15,000 Btu/h	EER = 7.6 COP = 2.52	January 1, 1994.

[1] "Cap" means cooling capacity in thousand Btu/h at 95 °F outdoor dry-bulb temperature.
[2] The applicable minimum cooling EER prescribed in this table.

TABLE 5 TO § 431.97—UPDATED MINIMUM EFFICIENCY STANDARDS FOR PTAC AND PTHP

Equipment type	Cooling capacity	Sub-category	Efficiency level	Compliance date: Products manufactured on and after . . .
PTAC	Standard Size	<7,000 Btu/h	EER = 11.7	October 8, 2012.
		≥7,000 Btu/h and ≤15,000 Btu/h.	EER = 13.8 − (0.3 × Cap[1])	October 8, 2012.
		>15,000 Btu/h	EER = 9.3	October 8, 2012.
	Non-Standard Size	<7,000 Btu/h	EER = 9.4	October 7, 2010.
		≥7,000 Btu/h and ≤15,000 Btu/h.	EER = 10.9 − (0.213 × Cap[1]).	October 7, 2010.
		>15,000 Btu/h	EER = 7.7	October 7, 2010.
PTHP	Standard Size	<7,000 Btu/h	EER = 11.9 COP = 3.3	October 8, 2012.
		≥7,000 Btu/h and ≤15,000 Btu/h.	EER = 14.0 − (0.3 × Cap[1]) COP = 3.7 − (0.052 × Cap[1]).	October 8, 2012.

TABLE 5 TO § 431.97—UPDATED MINIMUM EFFICIENCY STANDARDS FOR PTAC AND PTHP—Continued

Equipment type	Cooling capacity	Sub-category	Efficiency level	Compliance date: Products manufactured on and after . . .
	Non-Standard Size	>15,000 Btu/h	EER = 9.5 COP = 2.9	October 8, 2012.
		<7,000 Btu/h	EER = 9.3 COP = 2.7	October 7, 2010.
		≥7,000 Btu/h and ≤15,000 Btu/h.	EER = 10.8 − (0.213 × Cap[1]). COP = 2.9 − (0.026 × Cap[1]).	October 7, 2010.
		>15,000 Btu/h	EER = 7.6 COP = 2.5	October 7, 2010.

[1] "Cap" means cooling capacity in thousand Btu/h at 95 °F outdoor dry-bulb temperature.

(d) Each single package vertical air conditioner and heat pump manufactured on or after January 1, 2010, must meet the applicable minimum energy efficiency standard level(s) set forth in this section.

TABLE 6 TO § 431.97 MINIMUM EFFICIENCY STANDARDS FOR SINGLE PACKAGE VERTICAL AIR CONDITIONERS AND SINGLE PACKAGE VERTICAL HEAT PUMPS

Equipment type	Cooling capacity	Sub-category	Efficiency level	Compliance date: Products manufactured on and after . . .
Single package vertical air conditioners and single package vertical heat pumps, single-phase and three-phase.	<65,000 Btu/h	AC	EER = 9.0	January 1, 2010.
		HP	EER = 9.0 COP = 3.0	January 1, 2010.
Single package vertical air conditioners and single package vertical heat pumps.	≥65,000 Btu/h and <135,000 Btu/h.	AC	EER = 8.9	January 1, 2010.
		HP	EER = 8.9 COP = 3.0	January 1, 2010.
Single package vertical air conditioners and single package vertical heat pumps.	≥135,000 Btu/h and <240,000 Btu/h.	AC	EER = 8.6	January 1, 2010.
		HP	EER = 8.6 COP = 2.9	January 1, 2010.

(e) Each computer room air conditioner with a net sensible cooling capacity less than 65,000 Btu/h manufactured on or after October 29, 2012, and each computer room air conditioner with a net sensible cooling capacity greater than or equal to 65,000 Btu/h manufactured on or after October 29, 2013, must meet the applicable minimum energy efficiency standard level(s) set forth in this section.

TABLE 7 TO § 431.97—MINIMUM EFFICIENCY STANDARDS FOR COMPUTER ROOM AIR CONDITIONERS

Equipment type	Net sensible cooling capacity	Minimum SCOP efficiency		Compliance date: Products manufactured on and after . . .
		Downflow unit	Upflow unit	
Computer Room Air Conditioners, Air-Cooled.	<65,000 Btu/h	2.20	2.09	October 29, 2012.
	≥65,000 Btu/h and <240,000 Btu/h.	2.10	1.99	October 29, 2013.
	≥240,000 Btu/h and <760,000 Btu/h.	1.90	1.79	October 29, 2013.
Computer Room Air Conditioners, Water-Cooled.	<65,000 Btu/h	2.60	2.49	October 29, 2012.
	≥65,000 Btu/h and <240,000 Btu/h.	2.50	2.39	October 29, 2013.
	≥240,000 Btu/h and <760,000 Btu/h.	2.40	2.29	October 29, 2013.

TABLE 7 TO § 431.97—MINIMUM EFFICIENCY STANDARDS FOR COMPUTER ROOM AIR CONDITIONERS—Continued

Equipment type	Net sensible cooling capacity	Minimum SCOP efficiency		Compliance date: Products manufactured on and after . . .
		Downflow unit	Upflow unit	
Computer Room Air Conditioners, Water-Cooled with a Fluid Economizer.	<65,000 Btu/h	2.55	2.44	October 29, 2012.
	≥65,000 Btu/h and <240,000 Btu/h.	2.45	2.34	October 29, 2013.
	≥240,000 Btu/h and <760,000 Btu/h.	2.35	2.24	October 29, 2013.
Computer Room Air Conditioners, Glycol-Cooled.	<65,000 Btu/h	2.50	2.39	October 29, 2012.
	≥65,000 Btu/h and <240,000 Btu/h.	2.15	2.04	October 29, 2013.
	≥240,000 Btu/h and <760,000 Btu/h.	2.10	1.99	October 29, 2013.
Computer Room Air Conditioner, Glycol-Cooled with a Fluid Economizer.	<65,000 Btu/h	2.45	2.34	October 29, 2012.
	≥65,000 Btu/h and <240,000 Btu/h.	2.10	1.99	October 29, 2013.
	≥240,000 Btu/h and <760,000 Btu/h.	2.05	1.94	October 29, 2013.

(f) Each variable refrigerant flow air conditioner or heat pump manufactured on or after the compliance date listed in this table must meet the applicable minimum energy efficiency standard level(s) set forth in this section.

TABLE 8 TO § 431.97—MINIMUM EFFICIENCY STANDARDS FOR VARIABLE REFRIGERANT FLOW MULTI-SPLIT AIR CONDITIONERS AND HEAT PUMPS

Equipment type	Cooling capacity	Heating type[1]	Efficiency level	Compliance date: Products manufactured on and after . . .
VRF Multi-Split Air Conditioners (Air-Cooled).	<65,000 Btu/h	All	13.0 SEER	June 16, 2008.
	≥65,000 Btu/h and <135,000 Btu/h.	No Heating or Electric Resistance Heating.	11.2 EER	January 1, 2010.
		All Other Types of Heating.	11.0 EER	January 1, 2010.
	≥135,000 Btu/h and <240,000 Btu/h.	No Heating or Electric Resistance Heating.	11.0 EER	January 1, 2010.
		All Other Types of Heating.	10.8 EER	January 1, 2010.
	≥240,000 Btu/h and <760,000 Btu/h.	No Heating or Electric Resistance Heating.	10.0 EER	January 1, 2010.
		All Other Types of Heating.	9.8 EER	January 1, 2010.
VRF Multi-Split Heat Pumps (Air-Cooled)	<65,000 Btu/h	All	13.0 SEER 7.7 HSPF	June 16, 2008.
	≥65,000 Btu/h and <135,000 Btu/h.	No Heating or Electric Resistance Heating.	11.0 EER 3.3 COP	January 1, 2010.
		All Other Types of Heating.	10.8 EER 3.3 COP	January 1, 2010.
	≥135,000 Btu/h and <240,000 Btu/h.	No Heating or Electric Resistance Heating.	10.6 EER 3.2 COP	January 1, 2010.
		All Other Types of Heating.	10.4 EER 3.2 COP	January 1, 2010.
	≥240,000 Btu/h and <760,000 Btu/h.	No Heating or Electric Resistance Heating.	9.5 EER 3.2 COP	January 1, 2010.
		All Other Types of Heating.	9.3 EER 3.2 COP	January 1, 2010.
VRF Multi-Split Heat Pumps (Water-Source)* * *	<17,000 Btu/h	Without heat recovery.	12.0 EER 4.2 COP	October 29, 2012. October 29, 2003.

TABLE 8 TO § 431.97—MINIMUM EFFICIENCY STANDARDS FOR VARIABLE REFRIGERANT FLOW MULTI-SPLIT AIR CONDITIONERS AND HEAT PUMPS—Continued

Equipment type	Cooling capacity	Heating type[1]	Efficiency level	Compliance date: Products manufactured on and after . . .
		With heat recovery ..	11.8 EER	October 29, 2012.
			4.2 COP	October 29, 2003.
	≥17,000 Btu/h and <65,000 Btu/h.	All	12.0 EER	October 29, 2003.
			4.2 COP	
	≥65,000 Btu/h and <135,000 Btu/h.	All	12.0 EER	October 29, 2003.
			4.2 COP	
	≥135,000 Btu/h and <760,000 Btu/h.	Without heat recovery.	10.0 EER	October 29, 2013.
			3.9 COP	
		With heat recovery ..	9.8 EER	October 29, 2013
			3.9 COP	

[1] VRF Multi-Split Heat Pumps (Air-Cooled) with heat recovery fall under the category of "All Other Types of Heating" unless they also have electric resistance heating, in which case it falls under the category for "No Heating or Electric Resistance Heating."

[77 FR 28991, May 16, 2012, as amended at 77 FR 76830, Dec. 31, 2012]

Subpart G—Commercial Water Heaters, Hot Water Supply Boilers and Unfired Hot Water Storage Tanks

SOURCE: 69 FR 61983, Oct. 21, 2004, unless otherwise noted.

§ 431.101 Purpose and scope.

This subpart contains energy conservation requirements for certain commercial water heaters, hot water supply boilers and unfired hot water storage tanks, pursuant to Part C of Title III of the Energy Policy and Conservation Act, as amended, 42 U.S.C. 6311–6317.

[69 FR 61983, Oct. 21, 2004, as amended at 70 FR 60415, Oct. 18, 2005]

§ 431.102 Definitions concerning commercial water heaters, hot water supply boilers, and unfired hot water storage tanks.

The following definitions apply for purposes of this subpart G, and of subparts J through M of this part. Any words or terms not defined in this section or elsewhere in this part shall be defined as provided in section 340 of the Act, 42 U.S.C. 6311.

ASTM–D–2156–80 means the test standard published in 1980 by the American Society of Testing and Measurements and titled Method for Smoke Density in Flue Gases from Burning Distillate Fuels.

Basic model means all units of a given type of covered product (or class thereof) manufactured by one manufacturer, having the same primary energy source, and which have essentially identical electrical, physical, and functional (or hydraulic) characteristics that affect energy consumption, energy efficiency, water consumption, or water efficiency.

Hot water supply boiler means a packaged boiler that is industrial equipment and that,

(1) Has an input rating from 300,000 Btu/hr to 12,500,000 Btu/hr and of at least 4,000 Btu/hr per gallon of stored water,

(2) Is suitable for heating potable water, and

(3) Meets either or both of the following conditions:

(i) It has the temperature and pressure controls necessary for heating potable water for purposes other than space heating, or

(ii) The manufacturer's product literature, product markings, product marketing, or product installation and operation instructions indicate that the boiler's intended uses include heating potable water for purposes other than space heating.

Instantaneous water heater means a water heater that has an input rating not less than 4,000 Btu/hr per gallon of stored water, and that is industrial equipment, including products meeting this description that are designed to

heat water to temperatures of 180 °F or higher.

Packaged boiler means a boiler that is shipped complete with heating equipment, mechanical draft equipment and automatic controls; usually shipped in one or more sections and does not include a boiler that is custom designed and field constructed. If the boiler is shipped in more than one section, the sections may be produced by more than one manufacturer, and may be originated or shipped at different times and from more than one location.

R-value means the thermal resistance of insulating material as determined based on ASTM Standard Test Method C177–97 or C518–91 and expressed in ($°F \cdot ft^2 \cdot h/Btu$).

Standby loss means the average hourly energy required to maintain the stored water temperature, expressed as applicable either (1) as a percentage (per hour) of the heat content of the stored water and determined by the formula for S given in Section 2.10 of ANSI Z21.10.3–1998, denoted by the term ''S,'' or (2) in Btu per hour based on a 70 °F temperature differential between stored water and the ambient temperature, denoted by the term ''SL.''

Storage water heater means a water heater that heats and stores water within the appliance at a thermostatically controlled temperature for delivery on demand and that is industrial equipment. Such term does not include units with an input rating of 4,000 Btu/hr or more per gallon of stored water.

Tank surface area means, for the purpose of determining portions of a tank requiring insulation, those areas of a storage tank, including hand holes and manholes, in its uninsulated or pre-insulated state, that do not have pipe penetrations or tank supports attached.

Thermal efficiency for an instantaneous water heater, a storage water heater or a hot water supply boiler means the ratio of the heat transferred to the water flowing through the water heater to the amount of energy consumed by the water heater as measured during the thermal efficiency test procedure prescribed in this subpart.

Unfired hot water storage tank means a tank used to store water that is heated externally, and that is industrial equipment.

[69 FR 61983, Oct. 21, 2004, as amended at 76 FR 12503, Mar. 7, 2011]

EFFECTIVE DATE NOTE: At 78 FR 79599, Dec. 31, 2013, § 431.102 was amended by revising the definition of ''basic model'', effective Jan. 30, 2014. For the convenience of the user, the revised text is set forth as follows:

§ 431.102 Definitions concerning commercial water heaters, hot water supply boilers, and unfired hot water storage tanks.

* * * * *

Basic model means all water heaters, hot water supply boilers, or unfired hot water storage tanks manufactured by one manufacturer within a single equipment class, having the same primary energy source (e.g., gas or oil) and that have essentially identical electrical, physical and functional characteristics that affect energy efficiency.

* * * * *

§ 431.104 Sources for information and guidance.

(a) *General.* The standards listed in this paragraph are referred to in the DOE test procedures and elsewhere in this part but are not incorporated by reference. These sources are given here for information and guidance.

(b) *ASTM.* American Society for Testing and Materials, 100 Barr Harbor Drive, PO Box C700, West Conshohocken, PA, 19438–2959, 1–(877) 909–2786, or go to: *http://www.astm.org/index.shtml.*

(1) ASTM Standard Test Method C177–97, ''Standard Test Method for Steady-State Heat Flux Measurements and Thermal Transmission Properties by Means of the Guarded-Hot-Plate Apparatus.''

(2) ASTM Standard Test Method C518–91, ''Standard Test Method for Steady-State Heat Flux Measurements and Thermal Transmission Properties by Means of the Heat Flow Meter Apparatus.''

(3) ASTM Standard Test Method D2156–80, ''Method for Smoke Density in Flue Gases from Burning Distillate Fuels.''

[77 FR 28995, May 16, 2012]

TEST PROCEDURES

§ 431.105 Materials incorporated by reference.

(a) *General*. DOE incorporates by reference the following test procedures into subpart G of part 431. The materials listed have been approved for incorporation by reference by the Director of the Federal Register in accordance with 5 U.S.C. 552(a) and 1 CFR part 51. Any subsequent amendment to the listed materials by the standard-setting organization will not affect the DOE regulations unless and until such regulations are amended by DOE. Materials are incorporated as they exist on the date of the approval, and a notice of any change in the materials will be published in the FEDERAL REGISTER. All approved materials are available for inspection at the National Archives and Records Administration (NARA). For information on the availability of this material at NARA, call (202) 741–6030, or go to: *http://www.archives.gov/federal_register/code_of_federal_regulations/ibr_locations.html*. Also, this material is available for inspection at U.S. Department of Energy, Office of Energy Efficiency and Renewable Energy, Building Technologies Program, 6th Floor, 950 L'Enfant Plaza, SW., Washington, DC 20024, (202) 586–2945, or go to: *http://www1.eere.energy.gov/buildings/appliance_standards* The referenced test procedure standards are listed below by relevant standard-setting organization, along with information on how to obtain copies from those sources.

(b) *ANSI*. American National Standards Institute, 25 W. 43rd Street, 4th Floor, New York, NY 10036, (212) 642–4900, or go to: *http://www.ansi.org*.

(1) ANSI Z21.10.3–1998 (''ANSI Z21.10.3–1998''), ''*Gas Water Heaters, Volume III, Storage Water Heaters With Input Ratings Above 75,000 Btu Per Hour, Circulating and Instantaneous,* Z21.10.3–1998, CSA 4.3–M98, and its Addenda, ANSI Z21.10.3a–2000, CSA 4.3a–M00,'' approved by ANSI on October 18, 1999, IBR approved for § 431.106.

(2) ANSI Z21.10.3–2011 (''ANSI Z21.10.3–2011''), ''*Gas Water Heaters, Volume III, Storage Water Heaters With Input Ratings Above 75,000 Btu Per Hour, Circulating and Instantaneous*,'' approved on March 7, 2011, IBR approved for § 431.106.

(3) [Reserved]

[77 FR 28996, May 16, 2012]

§ 431.106 Uniform test method for the measurement of energy efficiency of commercial water heaters and hot water supply boilers (other than commercial heat pump water heaters).

(a) *Scope*. This section covers the test procedures you must follow if, pursuant to EPCA, you are measuring the thermal efficiency or standby loss, or both, of a storage or instantaneous water heater or hot water supply boiler (other than a commercial heat pump water heater).

(b) *Testing and Calculations*. Determine the energy efficiency of each covered product by conducting the test procedure(s), set forth in the two rightmost columns of the following table, that apply to the energy efficiency descriptor(s) for that product:

TABLE 1 TO §431.106—TEST PROCEDURES FOR COMMERCIAL WATER HEATERS AND HOT WATER SUPPLY BOILERS

[Other than commercial heat pump water heaters]

Equipment type	Energy efficiency descriptor	Use test setup, equipment and procedures in subsection labeled "Method of Test" of	Test procedure required for compliance until	With these additional stipulations
Gas-fired Storage and Instantaneous Water Heaters and Hot Water Supply Boilers*.	Thermal Efficiency Standby Loss	ANSI Z21.10.3–1998**, §2.9. ANSI Z21.10.3–1998**, §2.10.	May 13, 2013 ..... May 13, 2013	A. For all products, the duration of the standby loss test shall be until whichever of the following occurs first after you begin to measure the fuel and/or electric consumption: (1) The first cutout after 24 hours or (2) 48 hours, if the water heater is not in the heating mode at that time. B. For oil and gas products, the standby loss in Btu per hour must be calculated as follows: SL (Btu per hour) = S (% per hour) × 8.25 (Btu/gal-F) × Measured Volume (gal) × 70 (degrees F). C. For oil-fired products, apply the following in conducting the thermal efficiency and standby loss tests: (1) Venting Requirements—Connect a vertical length of flue pipe to the flue gas outlet of sufficient height so as to meet the minimum draft specified by the manufacturer. (2) Oil Supply—Adjust the burner rate so that: (a) The hourly Btu input rate lies within ±2 percent of the manufacturer's specified input rate, (b) the CO_2 reading shows the value specified by the manufacturer, (c) smoke in the flue does not exceed No. 1 smoke as measured by the procedure in ASTM–D–2156–80, and (d) fuel pump pressure lies within ±10 percent of manufacturer's specifications.

TABLE 1 TO § 431.106—TEST PROCEDURES FOR COMMERCIAL WATER HEATERS AND HOT WATER SUPPLY BOILERS—Continued

[Other than commercial heat pump water heaters]

Equipment type	Energy efficiency descriptor	Use test setup, equipment and procedures in subsection labeled ''Method of Test'' of	Test procedure required for compliance until	With these additional stipulations
				D. For electric products, apply the following in conducting the standby loss test: (1) Assume that the thermal efficiency (Et) of electric water heaters with immersed heating elements is 98 percent. (2) Maintain the electrical supply voltage to within ±5 percent of the center of the voltage range specified on the water heater nameplate. (3) If the set up includes multiple adjustable thermostats, set the highest one first to yield a maximum water temperature in the specified range as measured by the topmost tank thermocouple. Then set the lower thermostat(s) to yield a maximum mean tank temperature within the specified range. E. Install water-tube water heaters as shown in Figure 2, ''Arrangement for Testing Water-tube Type Instantaneous and Circulating Water Heaters.''

* As to hot water supply boilers with a capacity of less than 10 gallons, these test methods become mandatory on October 21, 2005. Prior to that time, you may use for these products either (1) these test methods if you rate the product for thermal efficiency, or (2) the test methods in Subpart E if you rate the product for combustion efficiency as a commercial packaged boiler.

** Incorporated by reference, see § 431.105.

TABLE 2 TO §431.106—TEST PROCEDURES FOR COMMERCIAL WATER HEATERS AND HOT WATER SUPPLY BOILERS

[Other than commercial heat pump water heaters]

Equipment type	Energy efficiency descriptor	Use test setup, equipment and procedures in subsection labeled "Method of Test" of	Test procedure required for compliance on and after	With these additional stipulations
Gas-fired Storage and Instantaneous Water Heaters and Hot Water Supply Boilers*.	Thermal Efficiency	ANSI Z21.10.3–2011**, Exhibit G1.	May 13, 2013	A. For all products, the duration of the standby loss test shall be until whichever of the following occurs first after you begin to measure the fuel and/or electric consumption: (1) The first cutout after 24 hours or (2) 48 hours, if the water heater is not in the heating mode at that time. B. For oil and gas products, the standby loss in Btu per hour must be calculated as follows: SL (Btu per hour) = S (% per hour) × 8.25 (Btu/gal-F) × Measured Volume (gal) × 70 (degrees F). C. For oil-fired products, apply the following in conducting the thermal efficiency and standby loss tests: (1) Venting Requirements—Connect a vertical length of flue pipe to the flue gas outlet of sufficient height so as to meet the minimum draft specified by the manufacturer. (2) Oil Supply—Adjust the burner rate so that: (a) The hourly Btu input rate lies within ±2 percent of the manufacturer's specified input rate, (b) the CO_2 reading shows the value specified by the manufacturer, (c) smoke in the flue does not exceed No. 1 smoke as measured by the procedure in ASTM–D–2156–80, and (d) fuel pump pressure lies within ±10 percent of manufacturer's specifications.
	Standby Loss	ANSI Z21.10.3–2011**, Exhibit G2.	May 13, 2013	
Oil-fired Storage and Instantaneous Water Heaters and Hot Water Supply Boilers*.	Thermal Efficiency	ANSI Z21.10.3–2011**, Exhibit G1.	May 13, 2013	
	Standby Loss	ANSI Z21.10.3–2011**, Exhibit G2.	May 13, 2013	
Electric Storage and Instantaneous Water Heaters.	Standby Loss	ANSI Z21.10.3–2011**, Exhibit G2.	May 13, 2013	

TABLE 2 TO § 431.106—TEST PROCEDURES FOR COMMERCIAL WATER HEATERS AND HOT WATER SUPPLY BOILERS—Continued

[Other than commercial heat pump water heaters]

Equipment type	Energy efficiency descriptor	Use test setup, equipment and procedures in subsection labeled ''Method of Test'' of	Test procedure required for compliance on and after	With these additional stipulations
				D. For electric products, apply the following in conducting the standby loss test: (1) Assume that the thermal efficiency (Et) of electric water heaters with immersed heating elements is 98 percent. (2) Maintain the electrical supply voltage to within ±5 percent of the center of the voltage range specified on the water heater nameplate. (3) If the set up includes multiple adjustable thermostats, set the highest one first to yield a maximum water temperature in the specified range as measured by the topmost tank thermocouple. Then set the lower thermostat(s) to yield a maximum mean tank temperature within the specified range. E. Install water-tube water heaters as shown in Figure 2, ''Arrangement for Testing Water-tube Type Instantaneous and Circulating Water Heaters.''

* As to hot water supply boilers with a capacity of less than 10 gallons, these test methods become mandatory on October 21, 2005. Prior to that time, you may use for these products either (1) these test methods if you rate the product for thermal efficiency, or (2) the test methods in Subpart E if you rate the product for combustion efficiency as a commercial packaged boiler.

** Incorporated by reference, *see* § 431.105.

[77 FR 28996, May 16, 2012]

§ 431.107 Uniform test method for the measurement of energy efficiency of commercial heat pump water heaters. [Reserved]

ENERGY CONSERVATION STANDARDS

§ 431.110 Energy conservation standards and their effective dates.

Each commercial storage water heater, instantaneous water heater, unfired hot water storage tank and hot water supply boiler[1] must meet the applicable energy conservation standard level(s) as follows:

[1] Any packaged boiler that provides service water, that meets the definition of ''commercial packaged boiler'' in subpart E of this part, but does not meet the definition of '' hot water supply boiler'' in subpart G, must meet the requirements that apply to it under subpart E.

Product	Size	Energy conservation standard[a] (products manufactured on and after October 29, 2003)[b]	
		Minimum thermal efficiency	Maximum standby loss[c]
Electric storage water heaters.	All	N/A	0.30 + 27/V_m (%/hr)
Gas-fired storage water heaters.	≤155,000 Btu/hr	80%	Q/800 + 110(V_r) ½ (Btu/hr)
	>155,000 Btu/hr	80%	Q/800 + 110(V_r) ½ (Btu/hr)
Oil-fired storage water heaters.	≤155,000 Btu/hr	78%	Q/800 + 110(V_r) ½ (Btu/hr)
	>155,000 Btu/hr	78%	Q/800 + 110(V_r) ½ (Btu/hr)
Gas-fired instantaneous water heaters and hot water supply boilers.	<10 gal	80%	N/A
	≥10 gal	80%	Q/800 + 110(V_r) ½ (Btu/hr)
Oil-fired instantaneous water heaters and hot water supply boilers.	<10 gal	80%	N/A
	≥10 gal	78%	Q/800 + 110(V_r) ½ (Btu/hr)

Product	Size	Minimum thermal insulation
Unfired hot water storage tank.	All	R–12.5

[a] V_m is the measured storage volume and V_r is the rated volume, both in gallons. Q is the nameplate input rate in Btu/hr.
[b] For hot water supply boilers with a capacity of less than 10 gallons: (1) the standards are mandatory for products manufactured on and after October 21, 2005, and (2) products manufactured prior to that date, and on or after October 23, 2003, must meet either the standards listed in this table or the applicable standards in subpart E of this part for a ''commercial packaged boiler.''
[c] Water heaters and hot water supply boilers having more than 140 gallons of storage capacity need not meet the standby loss requirement if (1) the tank surface area is thermally insulated to R–12.5 or more, (2) a standing pilot light is not used and (3) for gas or oil-fired storage water heaters, they have a fire damper or fan assisted combustion.

[69 FR 61983, Oct. 21, 2004; 69 FR 63574, Nov. 2, 2004]

Subpart H—Automatic Commercial Ice Makers

SOURCE: 70 FR 60415, Oct. 18, 2005, unless otherwise noted.

§431.131 Purpose and scope.

This subpart contains energy conservation requirements for commercial ice makers, pursuant to Part C of Title III of the Energy Policy and Conservation Act, as amended, 42 U.S.C. 6311–6317.

§431.132 Definitions concerning automatic commercial ice makers.

Automatic commercial ice maker means a factory-made assembly (not necessarily shipped in 1 package) that—

(1) Consists of a condensing unit and ice-making section operating as an integrated unit, with means for making and harvesting ice; and

(2) May include means for storing ice, dispensing ice, or storing and dispensing ice.

Basic model means all units of a given type of covered product (or class thereof) manufactured by one manufacturer, having the same primary energy source, and which have essentially identical electrical, physical, and functional (or hydraulic) characteristics that affect energy consumption, energy efficiency, water consumption, or water efficiency.

Batch type ice maker means an ice maker having alternate freezing and harvesting periods. This includes automatic commercial ice makers that produce cube type ice and other batch technologies. Referred to as cubes type ice maker in AHRI 810 (incorporated by reference, see §431.133).

Continuous type ice maker means an ice maker that continually freezes and harvests ice at the same time.

Cube type ice means ice that is fairly uniform, hard, solid, usually clear, and generally weighs less than two ounces (60 grams) per piece, as distinguished from flake, crushed, or fragmented ice. Note that this conflicts and takes precedence over the definition established in AHRI 810 (incorporated by reference, see §431.133), which indicates that ''cube'' does not reference a specific size or shape.

Energy use means the total energy consumed, stated in kilowatt hours per one-hundred pounds (kWh/100 lb) of ice stated in multiples of 0.1. For remote

condensing (but not remote compressor) automatic commercial ice makers and remote condensing and remote compressor automatic commercial ice makers, total energy consumed shall include the energy use of the ice-making mechanism, the compressor, and the remote condenser or condensing unit.

Harvest rate means the amount of ice (at 32 degrees F) in pounds produced per 24 hours.

Ice hardness factor means the latent heat capacity of harvested ice, in British thermal units per pound of ice (Btu/lb), divided by 144 Btu/lb, expressed as a percent.

Ice-making head means automatic commercial ice makers that do not contain integral storage bins, but are generally designed to accommodate a variety of bin capacities. Storage bins entail additional energy use not included in the reported energy consumption figures for these units.

Maximum condenser water use means the maximum amount of water used by the condensing unit (if water-cooled), stated in gallons per 100 pounds (gal/100 lb) of ice, in multiples of 1.

Remote compressor means a type of automatic commercial ice maker in which the ice-making mechanism and compressor are in separate sections.

Remote condensing means a type of automatic commercial ice maker in which the ice-making mechanism and condenser or condensing unit are in separate sections.

Self-contained means a type of automatic commercial ice maker in which the ice-making mechanism and storage compartment are in an integral cabinet.

[70 FR 60415, Oct. 18, 2005, as amended at 71 FR 71371, Dec. 8, 2006; 76 FR 12503, Mar. 7, 2011; 77 FR 1613, Jan. 11, 2012]

TEST PROCEDURES

§ 431.133 Materials incorporated by reference.

(a) *General.* We incorporate by reference the following standards into Subpart H of Part 431. The material listed has been approved for incorporation by reference by the Director of the Federal Register in accordance with 5 U.S.C. 552(a) and 1 CFR part 51. Any subsequent amendment to a standard by the standard-setting organization will not affect the DOE regulations unless and until amended by DOE. Material is incorporated as it exists on the date of the approval and a notice of any change in the material will be published in the FEDERAL REGISTER. All approved material is available for inspection at the U.S. Department of Energy, Office of Energy Efficiency and Renewable Energy, Building Technologies Program, 6th Floor, 950 L'Enfant Plaza SW., Washington, DC 20024, (202) 586–2945, or go to: *http://www1.eere.energy.gov/buildings/appliance_standards/*. Also, this material is available for inspection at National Archives and Records Administration (NARA). For information on the availability of this material at NARA, call (202) 741–6030 or go to *http://www.archives.gov/federal_register/code_of_federal_regulations/ibr_locations.html*. Standards can be obtained from the sources listed below.

(b) *AHRI.* Air-Conditioning, Heating, and Refrigeration Institute, 2111 Wilson Blvd., Suite 500, Arlington, VA 22201, (703) 524–8800, *ahri@ahrinet.org*, or *http://www.ahrinet.org*.

(1) AHRI Standard 810–2007 with Addendum 1, (''AHRI 810''), *Performance Rating of Automatic Commercial Ice-Makers*, March 2011; IBR approved for §§ 431.132 and 431.134.

(2) [Reserved]

(c) *ASHRAE.* American Society of Heating, Refrigerating and Air-Conditioning Engineers, Inc., 1791 Tullie Circle NE., Atlanta, GA 30329, (404) 636–8400, *ashrae@ashrae.org*, or *http://www.ashrae.org*.

(1) ANSI/ASHRAE Standard 29–2009, (''ANSI/ASHRAE 29''), *Method of Testing Automatic Ice Makers*, (including Errata Sheets issued April 8, 2010 and April 21, 2010), approved January 28, 2009; IBR approved for § 431.134.

(2) [Reserved]

[77 FR 1613, Jan. 11, 2012]

§ 431.134 Uniform test methods for the measurement of energy and water consumption of automatic commercial ice makers.

(a) *Scope*. This section provides the test procedures for measuring, pursuant to EPCA, the energy use in kilowatt hours per 100 pounds of ice (kWh/100 lb ice) and the condenser water use in gallons per 100 pounds of ice (gal/100 lb ice) of automatic commercial ice makers with capacities between 50 and 4,000 pounds of ice per 24 hours.

(b) *Testing and Calculations*. Measure the energy use and the condenser water use of each covered product by conducting the test procedures set forth in AHRI 810, section 3, ''Definitions,'' section 4, ''Test Requirements,'' and section 5, ''Rating Requirements'' (incorporated by reference, see § 431.133). Where AHRI 810 references ''ASHRAE Standard 29,'' ANSI/ASHRAE Standard 29–2009 (incorporated by reference, see § 431.133) shall be used. All references to cube type ice makers in AHRI 810 apply to all batch type automatic commercial ice makers.

(1) For batch type automatic commercial ice makers, the energy use and condenser water use will be reported as measured in this paragraph (b), including the energy and water consumption, as applicable, of the ice-making mechanism, the compressor, and the condenser or condensing unit.

(2)(i) For continuous type automatic commercial ice makers, determine the energy use and condenser water use by multiplying the energy consumption or condenser water use as measured in this paragraph (b) by the ice hardness adjustment factor, determined using the following equation:

$$\text{Ice Hardness Adjustment Factor} = \left[\frac{144\,{}^{\text{Btu}}/_{\text{lb}} + 38\,{}^{\text{Btu}}/_{\text{lb}}}{144\,{}^{\text{Btu}}/_{\text{lb}} \times \left({}^{\text{Ice Hardness Factor}}/_{100}\right) + 38\,{}^{\text{Btu}}/_{\text{lb}}}\right]$$

(ii) Determine the ice hardness factor by following the procedure specified in the ''Procedure for Determining Ice Quality'' in section A.3 of normative annex A of ANSI/ASHRAE 29 (incorporated by reference, see § 431.133), except that the test shall be conducted at an ambient air temperature of 70 °F ±1 °F, with an initial water temperature of 90 °F ±1 °F, and weights shall be accurate to within ±2 percent of the quantity measured. The ice hardness factor is equivalent to the corrected net cooling effect per pound of ice, line 19 in ANSI/ASHRAE 29 Table A1, where the calorimeter constant used in line 18 shall be that determined in section A2 using seasoned, block ice.

[77 FR 1613, Jan. 11, 2012]

ENERGY CONSERVATION STANDARDS

§ 431.136 Energy conservation standards and their effective dates.

Each automatic commercial ice maker that produces cube type ice with capacities between 50 and 2500 pounds per 24-hour period when tested according to the test standard established in accordance with section 343 of EPCA (42 U.S.C. 6314) and is manufactured on or after January 1, 2010, shall meet the following standard levels:

Equipment type	Type of cooling	Harvest rate (lbs ice/24 hours)	Maximum energy use (kWh/100 lbs ice)	Maximum condenser water use * (gal/100 lbs ice)
Ice Making Head	Water	<500	7.80–0.0055H	200–0.022H.
Ice Making Head	Water	≥500 and <1436	5.58–0.0011H	200–0.022H.
Ice Making Head	Water	≥1436	4.0	200–0.022H.
Ice Making Head	Air	<450	10.26–0.0086H	Not applicable.
Ice Making Head	Air	≥450	6.89–0.0011H	Not applicable.
Remote Condensing (but not remote compressor)	Air	<1000	8.85–0.0038H	Not applicable.
Remote Condensing (but not remote compressor)	Air	≥1000	5.1	Not applicable.
Remote Condensing and Remote Compressor	Air	<934	8.85–0.0038H	Not applicable.
Remote Condensing and Remote Compressor	Air	≥934	5.3	Not applicable.
Self Contained	Water	<200	11. 40–0.019H	191–0.0315H.

Equipment type	Type of cooling	Harvest rate (lbs ice/24 hours)	Maximum energy use (kWh/100 lbs ice)	Maximum condenser water use * (gal/100 lbs ice)
Self Contained	Water	≥200	7.6	191–0.0315H.
Self Contained	Air	<175	18.0–0.0469H	Not applicable.
Self Contained	Air	≥175	9.8	Not applicable.

H Harvest rate in pounds per 24 hours.
*Water use is for the condenser only and does not include potable water used to make ice.

[70 FR 60415, Oct. 18, 2005; 70 FR 61698, Oct. 25, 2005]

Subpart I—Commercial Clothers Washers

SOURCE: 70 FR 60416, Oct. 18, 2005, unless otherwise noted.

§ 431.151 Purpose and scope.

This subpart contains energy conservation requirements for commercial clothes washers, pursuant to Part C of Title III of the Energy Policy and Conservation Act, as amended, 42 U.S.C. 6311–6317.

§ 431.152 Definitions concerning commercial clothes washers.

Basic model means all units of a given type of covered product (or class thereof) manufactured by one manufacturer, having the same primary energy source, and which have essentially identical electrical, physical, and functional (or hydraulic) characteristics that affect energy consumption, energy efficiency, water consumption, or water efficiency.

Commercial clothes washer means a soft-mounted front-loading or soft-mounted top-loading clothes washer that—

(1) Has a clothes container compartment that—

(i) For horizontal-axis clothes washers, is not more than 3.5 cubic feet; and

(ii) For vertical-axis clothes washers, is not more than 4.0 cubic feet; and

(2) Is designed for use in—

(i) Applications in which the occupants of more than one household will be using the clothes washer, such as multi-family housing common areas and coin laundries; or

(ii) Other commercial applications.

[70 FR 60416, Oct. 18, 2005, as amended at 76 FR 12504, Mar. 7, 2011]

TEST PROCEDURES

§ 431.154 Test procedures.

The test procedures for residential clothes washers in appendix J1 to subpart B of part 430 of this title shall be used to test commercial clothes washers.

ENERGY CONSERVATION STANDARDS

§ 431.156 Energy and water conservation standards and effective dates.

(a) Each commercial clothes washer manufactured between January 1, 2007, and January 8, 2013, shall have—

(1) A modified energy factor of at least 1.26; and

(2) A water consumption factor of not more than 9.5.

(b) Each commercial clothes washer manufactured on or after January 8, 2013, shall have a modified energy factor no less than and a water factor no greater than:

Equipment class	Modified energy factor, *cu. ft./kWh/cycle*	Water factor, *gal./cu. ft./cycle*
Top-Loading	1.60	8.5
Front-Loading	2.00	5.5

[76 FR 69123, Nov. 8, 2011]

Subpart J [Reserved]

§§ 431.171–431.176 [Reserved]

Subpart K—Distribution Transformers

SOURCE: 70 FR 60416, Oct. 18, 2005, unless otherwise noted.

§ 431.191 Purpose and scope.

This subpart contains energy conservation requirements for distribution

transformers, pursuant to Parts B and C of Title III of the Energy Policy and Conservation Act, as amended, 42 U.S.C. 6291–6317.

[71 FR 24995, Apr. 27, 2006]

§ 431.192 Definitions.

The following definitions apply for purposes of this subpart:

Autotransformer means a transformer that:

(1) Has one physical winding that consists of a series winding part and a common winding part;

(2) Has no isolation between its primary and secondary circuits; and

(3) During step-down operation, has a primary voltage that is equal to the total of the series and common winding voltages, and a secondary voltage that is equal to the common winding voltage.

Basic model means a group of models of distribution transformers manufactured by a single manufacturer, that have the same insulation type (*i.e.*, liquid-immersed or dry-type), have the same number of phases (*i.e.*, single or three), have the same standard kVA rating, and do not have any differentiating electrical, physical or functional features that affect energy consumption. Differences in voltage and differences in basic impulse insulation level (BIL) rating are examples of differentiating electrical features that affect energy consumption.

Distribution transformer means a transformer that—

(1) Has an input voltage of 34.5 kV or less;

(2) Has an output voltage of 600 V or less;

(3) Is rated for operation at a frequency of 60 Hz; and

(4) Has a capacity of 10 kVA to 2500 kVA for liquid-immersed units and 15 kVA to 2500 kVA for dry-type units; but

(5) The term ''distribution transformer'' does not include a transformer that is an—

(i) Autotransformer;

(ii) Drive (isolation) transformer;

(iii) Grounding transformer;

(iv) Machine-tool (control) transformer;

(v) Nonventilated transformer;

(vi) Rectifier transformer;

(vii) Regulating transformer;

(viii) Sealed transformer;

(ix) Special-impedance transformer;

(x) Testing transformer;

(xi) Transformer with tap range of 20 percent or more;

(xii) Uninterruptible power supply transformer; or

(xiii) Welding transformer.

Drive (isolation) transformer means a transformer that:

(1) Isolates an electric motor from the line;

(2) Accommodates the added loads of drive-created harmonics; and

(3) Is designed to withstand the additional mechanical stresses resulting from an alternating current adjustable frequency motor drive or a direct current motor drive.

Efficiency means the ratio of the useful power output to the total power input.

Excitation current or *no-load current* means the current that flows in any winding used to excite the transformer when all other windings are open-circuited.

Grounding transformer means a three-phase transformer intended primarily to provide a neutral point for system-grounding purposes, either by means of:

(1) A grounded wye primary winding and a delta secondary winding; or

(2) A transformer with its primary winding in a zig-zag winding arrangement, and with no secondary winding.

Liquid-immersed distribution transformer means a distribution transformer in which the core and coil assembly is immersed in an insulating liquid.

Load loss means, for a distribution transformer, those losses incident to a specified load carried by the transformer, including losses in the windings as well as stray losses in the conducting parts of the transformer.

Low-voltage dry-type distribution transformer means a distribution transformer that—

(1) Has an input voltage of 600 volts or less;

(2) Is air-cooled; and

(3) Does not use oil as a coolant.

Machine-tool (control) transformer means a transformer that is equipped

with a fuse or other over-current protection device, and is generally used for the operation of a solenoid, contactor, relay, portable tool, or localized lighting.

Medium-voltage dry-type distribution transformer means a distribution transformer in which the core and coil assembly is immersed in a gaseous or dry-compound insulating medium, and which has a rated primary voltage between 601 V and 34.5 kV.

Mining distribution transformer means a medium-voltage dry-type distribution transformer that is built only for installation in an underground mine or surface mine, inside equipment for use in an underground mine or surface mine, on-board equipment for use in an underground mine or surface mine, or for equipment used for digging, drilling, or tunneling underground or above ground, and that has a nameplate which identifies the transformer as being for this use only.

No-load loss means those losses that are incident to the excitation of the transformer.

Nonventilated transformer means a transformer constructed so as to prevent external air circulation through the coils of the transformer while operating at zero gauge pressure.

Phase angle means the angle between two phasors, where the two phasors represent progressions of periodic waves of either:

(1) Two voltages;

(2) Two currents; or

(3) A voltage and a current of an alternating current circuit.

Phase angle correction means the adjustment (correction) of measurement data to negate the effects of phase angle error.

Phase angle error means incorrect displacement of the phase angle, introduced by the components of the test equipment.

Rectifier transformer means a transformer that operates at the fundamental frequency of an alternating-current system and that is designed to have one or more output windings connected to a rectifier.

Reference temperature means 20 °C for no-load loss, 55 °C for load loss of liquid-immersed distribution transformers at 50 percent load, and 75 °C for load loss of both low-voltage and medium-voltage dry-type distribution transformers, at 35 percent load and 50 percent load, respectively. It is the temperature at which the transformer losses must be determined, and to which such losses must be corrected if testing is done at a different point. (These temperatures are specified in the test method in appendix A to this part.)

Regulating transformer means a transformer that varies the voltage, the phase angle, or both voltage and phase angle, of an output circuit and compensates for fluctuation of load and input voltage, phase angle or both voltage and phase angle.

Sealed transformer means a transformer designed to remain hermetically sealed under specified conditions of temperature and pressure.

Special-impedance transformer means any transformer built to operate at an impedance outside of the normal impedance range for that transformer's kVA rating. The normal impedance range for each kVA rating for liquid-immersed and dry-type transformers is shown in Tables 1 and 2, respectively.

TABLE 1—NORMAL IMPEDANCE RANGES FOR LIQUID-IMMERSED TRANSFORMERS

Single-phase transformers		Three-phase transformers	
kVA	Impedance (%)	kVA	Impedance (%)
10	1.0–4.5	15	1.0–4.5
15	1.0–4.5	30	1.0–4.5
25	1.0–4.5	45	1.0–4.5
37.5	1.0–4.5	75	1.0–5.0
50	1.5–4.5	112.5	1.2–6.0
75	1.5–4.5	150	1.2–6.0
100	1.5–4.5	225	1.2–6.0
167	1.5–4.5	300	1.2–6.0
250	1.5–6.0	500	1.5–7.0
333	1.5–6.0	750	5.0–7.5
500	1.5–7.0	1000	5.0–7.5
667	5.0–7.5	1500	5.0–7.5
833	5.0–7.5	2000	5.0–7.5
		2500	5.0–7.5

TABLE 2—NORMAL IMPEDANCE RANGES FOR DRY-TYPE TRANSFORMERS

Single-phase transformers		Three-phase transformers	
kVA	Impedance (%)	kVA	Impedance (%)
15	1.5–6.0	15	1.5–6.0
25	1.5–6.0	30	1.5–6.0
37.5	1.5–6.0	45	1.5–6.0
50	1.5–6.0	75	1.5–6.0
75	2.0–7.0	112.5	1.5–6.0

TABLE 2—NORMAL IMPEDANCE RANGES FOR DRY-TYPE TRANSFORMERS—Continued

Single-phase transformers		Three-phase transformers	
kVA	Impedance (%)	kVA	Impedance (%)
100	2.0–7.0	150	1.5–6.0
167	2.5–8.0	225	3.0–7.0
250	3.5–8.0	300	3.0–7.0
333	3.5–8.0	500	4.5–8.0
500	3.5–8.0	750	5.0–8.0
667	5.0–8.0	1000	5.0–8.0
833	5.0–8.0	1500	5.0–8.0
		2000	5.0–8.0
		2500	5.0–8.0

Temperature correction means the mathematical correction(s) of measurement data, obtained when a transformer is tested at a temperature that is different from the reference temperature, to the value(s) that would have been obtained if the transformer had been tested at the reference temperature.

Test current means the current of the electrical power supplied to the transformer under test.

Test frequency means the frequency of the electrical power supplied to the transformer under test.

Test voltage means the voltage of the electrical power supplied to the transformer under test.

Testing transformer means a transformer used in a circuit to produce a specific voltage or current for the purpose of testing electrical equipment.

Total loss means the sum of the no-load loss and the load loss for a transformer.

Transformer means a device consisting of 2 or more coils of insulated wire that transfers alternating current by electromagnetic induction from 1 coil to another to change the original voltage or current value.

Transformer with tap range of 20 percent or more means a transformer with multiple voltage taps, the highest of which equals at least 20 percent more than the lowest, computed based on the sum of the deviations of the voltages of these taps from the transformer's nominal voltage.

Uninterruptible power supply transformer means a transformer that is used within an uninterruptible power system, which in turn supplies power to loads that are sensitive to power failure, power sags, over voltage, switching transients, line noise, and other power quality factors.

Waveform correction means the adjustment(s) (mathematical correction(s)) of measurement data obtained with a test voltage that is non-sinusoidal, to a value(s) that would have been obtained with a sinusoidal voltage.

Welding transformer means a transformer designed for use in arc welding equipment or resistance welding equipment.

[70 FR 60416, Oct. 18, 2005, as amended at 71 FR 24995, Apr. 27, 2006; 71 FR 60662, Oct. 16, 2006; 72 FR 58239, Oct. 12, 2007; 78 FR 23433, Apr. 18, 2013]

TEST PROCEDURES

§ 431.193 Test procedures for measuring energy consumption of distribution transformers.

The test procedures for measuring the energy efficiency of distribution transformers for purposes of EPCA are specified in appendix A to this subpart.

[71 FR 24997, Apr. 27, 2006]

ENERGY CONSERVATION STANDARDS

§ 431.196 Energy conservation standards and their effective dates.

(a) *Low-Voltage Dry-Type Distribution Transformers.* (1) The efficiency of a low-voltage, dry-type distribution transformer manufactured on or after January 1, 2007, but before January 1, 2016, shall be no less than that required for the applicable kVA rating in the table below. Low-voltage dry-type distribution transformers with kVA ratings not appearing in the table shall have their minimum efficiency level determined by linear interpolation of the kVA and efficiency values immediately above and below that kVA rating.

Single-phase		Three-phase	
kVA	%	kVA	%
15	97.7	15	97.0
25	98.0	30	97.5
37.5	98.2	45	97.7
50	98.3	75	98.0
75	98.5	112.5	98.2
100	98.6	150	98.3
167	98.7	225	98.5
250	98.8	300	98.6
333	98.9	500	98.7
		750	98.8

Single-phase		Three-phase	
kVA	%	kVA	%
		1000	98.9

Note: All efficiency values are at 35 percent of nameplate-rated load, determined according to the DOE Test Method for Measuring the Energy Consumption of Distribution Transformers under Appendix A to Subpart K of 10 CFR part 431.

(2) The efficiency of a low-voltage dry-type distribution transformer manufactured on or after January 1, 2016, shall be no less than that required for their kVA rating in the table below. Low-voltage dry-type distribution transformers with kVA ratings not appearing in the table shall have their minimum efficiency level determined by linear interpolation of the kVA and efficiency values immediately above and below that kVA rating.

Single-phase		Three-phase	
kVA	Efficiency (%)	kVA	Efficiency (%)
15	97.70	15	97.89
25	98.00	30	98.23
37.5	98.20	45	98.40
50	98.30	75	98.60
75	98.50	112.5	98.74
100	98.60	150	98.83
167	98.70	225	98.94
250	98.80	300	99.02
333	98.90	500	99.14
		750	99.23
		1000	99.28

Note: All efficiency values are at 35 percent of nameplate-rated load, determined according to the DOE Test Method for Measuring the Energy Consumption of Distribution Transformers under Appendix A to Subpart K of 10 CFR part 431.

(b) *Liquid-Immersed Distribution Transformers.* (1) The efficiency of a liquid-immersed distribution transformer manufactured on or after January 1, 2010, but before January 1, 2016, shall be no less than that required for their kVA rating in the table below. Liquid-immersed distribution transformers with kVA ratings not appearing in the table shall have their minimum efficiency level determined by linear interpolation of the kVA and efficiency values immediately above and below that kVA rating.

Single-phase		Three-phase	
kVA	Efficiency (%)	kVA	Efficiency (%)
10	98.62	15	98.36
15	98.76	30	98.62
25	98.91	45	98.76
37.5	99.01	75	98.91
50	99.08	112.5	99.01
75	99.17	150	99.08
100	99.23	225	99.17
167	99.25	300	99.23
250	99.32	500	99.25
333	99.36	750	99.32
500	99.42	1000	99.36
667	99.46	1500	99.42
833	99.49	2000	99.46
		2500	99.49

Note: All efficiency values are at 50 percent of nameplate-rated load, determined according to the DOE Test—Procedure, Appendix A to Subpart K of 10 CFR part 431.

(2) The efficiency of a liquid-immersed distribution transformer manufactured on or after January 1, 2016, shall be no less than that required for their kVA rating in the table below. Liquid-immersed distribution transformers with kVA ratings not appearing in the table shall have their minimum efficiency level determined by linear interpolation of the kVA and efficiency values immediately above and below that kVA rating.

Single-phase		Three-phase	
kVA	Efficiency (%)	kVA	Efficiency (%)
10	98.70	15	98.65
15	98.82	30	98.83
25	98.95	45	98.92
37.5	99.05	75	99.03
50	99.11	112.5	99.11
75	99.19	150	99.16
100	99.25	225	99.23
167	99.33	300	99.27
250	99.39	500	99.35
333	99.43	750	99.40
500	99.49	1000	99.43
667	99.52	1500	99.48
833	99.55	2000	99.51
		2500	99.53

Note: All efficiency values are at 50 percent of nameplate-rated load, determined according to the DOE Test Method for Measuring the Energy Consumption of Distribution Transformers under Appendix A to Subpart K of 10 CFR part 431.

(c) *Medium-Voltage Dry-Type Distribution Transformers.* (1) The efficiency of a medium-voltage dry-type distribution transformer manufactured on or after January 1, 2010, but before January 1, 2016, shall be no less than that required for their kVA and BIL rating in the table below. Medium-voltage dry-type distribution transformers with kVA ratings not appearing in the table shall have their minimum efficiency level determined by linear interpolation of the kVA and efficiency values immediately above and below that kVA rating.

Single-phase				Three-phase			
kVA	BIL*			kVA	BIL		
	20–45 kV	46–95 kV	≥96 kV		20–45 kV	46–95 kV	≥96 kV
	Efficiency (%)	Efficiency (%)	Efficiency (%)		Efficiency (%)	Efficiency (%)	Efficiency (%)
15	98.10	97.86		15	97.50	97.18	
25	98.33	98.12		30	97.90	97.63	
37.5	98.49	98.30		45	98.10	97.86	
50	98.60	98.42		75	98.33	98.12	
75	98.73	98.57	98.53	112.5	98.49	98.30	
100	98.82	98.67	98.63	150	98.60	98.42	
167	98.96	98.83	98.80	225	98.73	98.57	98.53
250	99.07	98.95	98.91	300	98.82	98.67	98.63
333	99.14	99.03	98.99	500	98.96	98.83	98.80
500	99.22	99.12	99.09	750	99.07	98.95	98.91
667	99.27	99.18	99.15	1000	99.14	99.03	98.99
833	99.31	99.23	99.20	1500	99.22	99.12	99.09
				2000	99.27	99.18	99.15
				2500	99.31	99.23	99.20

*BIL means basic impulse insulation level.
Note: All efficiency values are at 50 percent of nameplate rated load, determined according to the DOE Test Method for Measuring the Energy Consumption of Distribution Transformers under Appendix A to Subpart K of 10 CFR part 431.

(2) The efficiency of a medium- voltage dry-type distribution transformer manufactured on or after January 1, 2016, shall be no less than that required for their kVA and BIL rating in the table below. Medium-voltage dry-type distribution transformers with kVA ratings not appearing in the table shall have their minimum efficiency level determined by linear interpolation of the kVA and efficiency values immediately above and below that kVA rating.

Single-phase				Three-phase			
kVA	BIL*			kVA	BIL		
	20–45 kV	46–95 kV	≥96 kV		20–45 kV	46–95 kV	≥96 kV
	Efficiency (%)	Efficiency (%)	Efficiency (%)		Efficiency (%)	Efficiency (%)	Efficiency (%)
15	98.10	97.86		15	97.50	97.18	
25	98.33	98.12		30	97.90	97.63	
37.5	98.49	98.30		45	98.10	97.86	
50	98.60	98.42		75	98.33	98.13	
75	98.73	98.57	98.53	112.5	98.52	98.36	
100	98.82	98.67	98.63	150	98.65	98.51	
167	98.96	98.83	98.80	225	98.82	98.69	98.57
250	99.07	98.95	98.91	300	98.93	98.81	98.69
333	99.14	99.03	98.99	500	99.09	98.99	98.89
500	99.22	99.12	99.09	750	99.21	99.12	99.02
667	99.27	99.18	99.15	1000	99.28	99.20	99.11
833	99.31	99.23	99.20	1500	99.37	99.30	99.21
				2000	99.43	99.36	99.28
				2500	99.47	99.41	99.33

*BIL means basic impulse insulation level.
Note: All efficiency values are at 50 percent of nameplate rated load, determined according to the DOE Test Method for Measuring the Energy Consumption of Distribution Transformers under Appendix A to Subpart K of 10 CFR part 431.

(d) *Mining Distribution Transformers.* [Reserved]

[78 FR 23433, Apr. 18, 2013]

COMPLIANCE AND ENFORCEMENT

SOURCE: 71 FR 24997, Apr. 27, 2006, unless otherwise noted.

APPENDIX A TO SUBPART K OF PART 431—UNIFORM TEST METHOD FOR MEASURING THE ENERGY CONSUMPTION OF DISTRIBUTION TRANSFORMERS

1.0 DEFINITIONS.

The definitions contained in §§431.2 and 431.192 are applicable to this appendix A.

2.0 ACCURACY REQUIREMENTS.

(a) Equipment and methods for loss measurement shall be sufficiently accurate that measurement error will be limited to the values shown in Table 2.1.

TABLE 2.1—TEST SYSTEM ACCURACY REQUIREMENTS FOR EACH MEASURED QUANTITY

Measured quantity	Test system accuracy
Power Losses	±3.0%
Voltage	±0.5%
Current	±0.5%
Resistance	±0.5%
Temperature	±1.0 °C

(b) Only instrument transformers meeting the 0.3 metering accuracy class, or better, may be used under this test method.

3.0 RESISTANCE MEASUREMENTS

3.1 *General Considerations*

(a) Measure or establish the winding temperature at the time of the winding resistance measurement.

(b) Measure the direct current resistance (R_{dc}) of transformer windings by one of the methods outlined in section 3.3. The methods of section 3.5 must be used to correct load losses to the applicable reference temperature from the temperature at which they are measured. Observe precautions while taking measurements, such as those in section 3.4, in order to maintain measurement uncertainty limits specified in Table 2.1.

3.2 *Temperature Determination of Windings and Pre-conditions for Resistance Measurement.*

Make temperature measurements in protected areas where the air temperature is stable and there are no drafts. Determine the winding temperature (T_{dc}) for liquid-immersed and dry-type distribution transformers by the methods described in sections 3.2.1 and 3.2.2, respectively.

3.2.1 *Liquid-Immersed Distribution Transformers.*

3.2.1.1 *Methods*

Record the winding temperature (T_{dc}) of liquid-immersed transformers as the average of either of the following:

(a) The measurements from two temperature sensing devices (for example, thermocouples) applied to the outside of the transformer tank and thermally insulated from the surrounding environment, with one located at the level of the oil and the other located near the tank bottom or at the lower radiator header if applicable; or

(b) The measurements from two temperature sensing devices immersed in the transformer liquid, with one located directly above the winding and other located directly below the winding.

3.2.1.2 *Conditions*

Make this determination under either of the following conditions:

(a) The windings have been under insulating liquid with no excitation and no current in the windings for four hours before the dc resistance is measured; or

(b) The temperature of the insulating liquid has stabilized, and the difference between the top and bottom temperature does not exceed 5 °C.

3.2.2 *Dry-Type Distribution Transformers.*

Record the winding temperature (T_{dc}) of dry-type transformers as either of the following:

(a) For ventilated dry-type units, use the average of readings of four or more thermometers, thermocouples, or other suitable temperature sensors inserted within the coils. Place the sensing points of the measuring devices as close as possible to the winding conductors. For sealed units, such as epoxy-coated or epoxy-encapsulated units, use the average of four or more temperature sensors located on the enclosure and/or cover, as close to different parts of the winding assemblies as possible; or

(b) For both ventilated and sealed units, use the ambient temperature of the test area, under the following conditions:

(1) All internal temperatures measured by the internal temperature sensors must not differ from the test area ambient temperature by more than 2 °C.

(2) Enclosure surface temperatures for sealed units must not differ from the test area ambient temperature by more than 2 °C.

(3) Test area ambient temperature should not have changed by more than 3 °C for 3 hours before the test.

(4) Neither voltage nor current has been applied to the unit under test for 24 hours. In addition, increase this initial 24 hour period by any added amount of time necessary for the temperature of the transformer windings to stabilize at the level of the ambient temperature. However, this additional amount of time need not exceed 24 hours.

3.3 *Resistance Measurement Methods.*

Make resistance measurements using either the resistance bridge method, the voltmeter-ammeter method or a resistance meter. In each instance when this Uniform Test Method is used to test more than one unit of a basic model to determine the efficiency of that basic model, the resistance of

the units being tested may be determined from making resistance measurements on only one of the units.

3.3.1 *Resistance Bridge Methods.*

If the resistance bridge method is selected, use either the Wheatstone or Kelvin bridge circuit (or the equivalent of either).

3.3.1.1 *Wheatstone Bridge*

(a) This bridge is best suited for measuring resistances larger than ten ohms. A schematic diagram of a Wheatstone bridge with a representative transformer under test is shown in Figure 3.1.

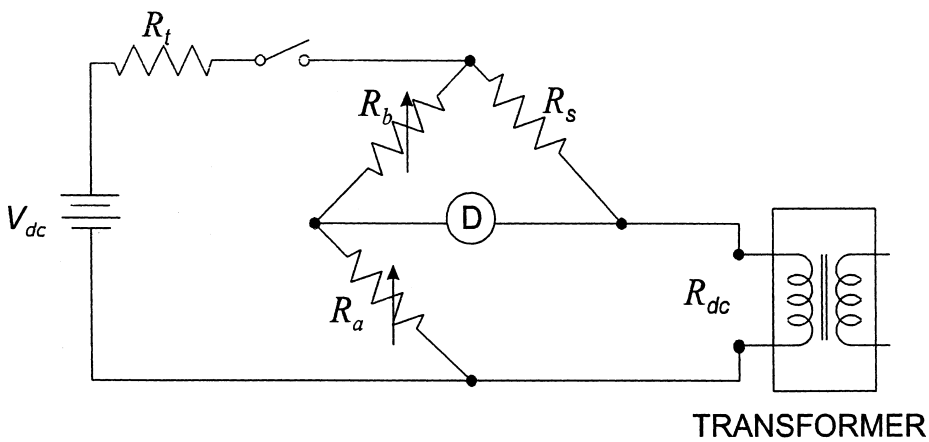

Figure 3.1 Wheatstone Bridge

Where:

R_{dc} is the resistance of the transformer winding being measured,

R_s is a standard resistor having the resistance R_s,

R_a, R_b are two precision resistors with resistance values R_a and R_b , respectively; at least one resistor must have a provision for resistance adjustment,

R_t is a resistor for reducing the time constant of the circuit,

D is a null detector, which may be either a micro ammeter or microvoltmeter or equivalent instrument for observing that no signal is present when the bridge is balanced, and

V_{dc} is a source of dc voltage for supplying the power to the Wheatstone Bridge.

(b) In the measurement process, turn on the source (V_{dc}), and adjust the resistance ratio (R_a/R_b) to produce zero signal at the detector (D). Determine the winding resistance by using equation 3–1 as follows:

$$R_{dc} = R_s \left(R_a/R_b\right) \qquad (3\text{-}1)$$

3.3.1.2 *Kelvin Bridge*

(a) This bridge separates the resistance of the connecting conductors to the transformer winding being measured from the resistance of the winding, and therefore is best suited for measuring resistances of ten ohms and smaller. A schematic diagram of a Kelvin bridge with a representative transformer under test is shown in Figure 3.2.

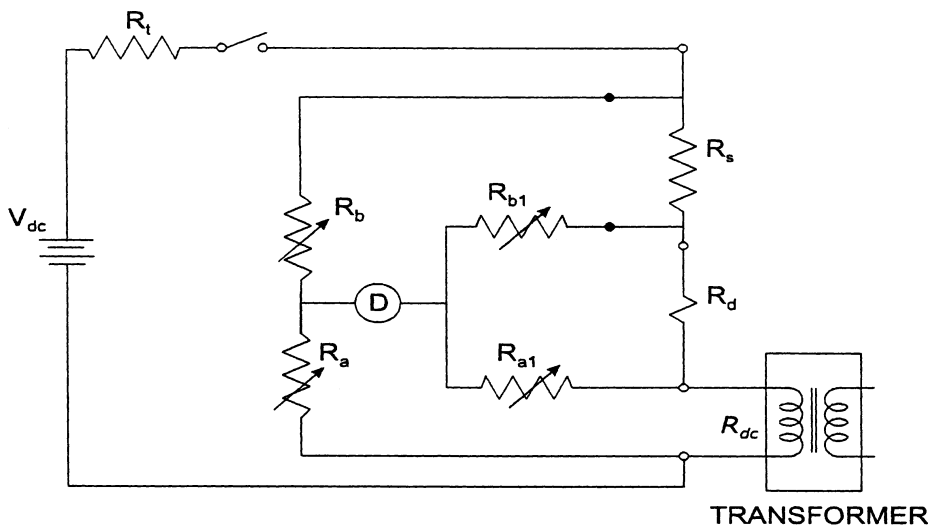

Figure 3.2 Kelvin Bridge

(b) The Kelvin Bridge has seven of the same type of components as in the Wheatstone Bridge. It has two more resistors than the Wheatstone bridge, R_{a1} and R_{b1}. At least one of these resistors must have adjustable resistance. In the measurement process, the source is turned on, two resistance ratios (R_a/R_b) and (R_{a1}/R_{b1}) are adjusted to be equal, and then the two ratios are adjusted together to balance the bridge producing zero signal at the detector. Determine the winding resistance by using equation 3–2 as follows:

$$R_{dc} = R_s\left(R_a/R_b\right) \qquad (3\text{-}2),$$

as with the Wheatstone bridge, with an additional condition that:

$$\left(R_a/R_b\right) = \left(R_{a1}/R_{b1}\right) \qquad (3\text{-}3)$$

(c) The Kelvin bridge provides two sets of leads, current-carrying and voltage-sensing, to the transformer terminals and the standard resistor, thus eliminating voltage drops from the measurement in the current-carrying leads as represented by R_d.

3.3.2 *Voltmeter-Ammeter Method.*

(a) Employ the voltmeter-ammeter method only if the rated current of the winding is greater than one ampere and the test current is limited to 15 percent of the winding current. Connect the transformer winding under test to the circuit shown in Figure 3.3.

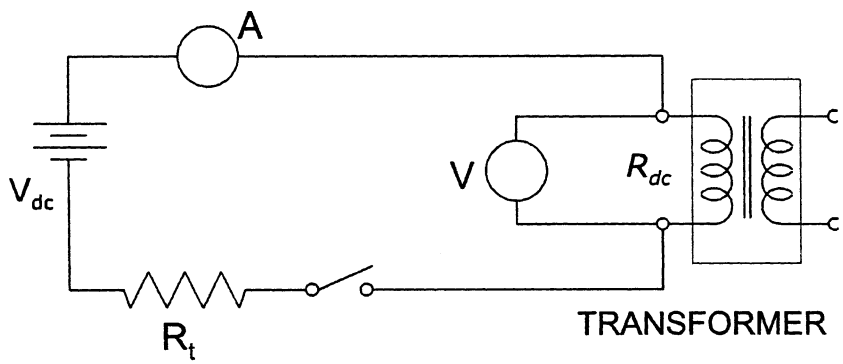

Figure 3.3 Voltmeter-Ammeter Method

Where:

A is an ammeter or a voltmeter-shunt combination for measuring the current (I_{mdc}) in the transformer winding,

V is a voltmeter with sensitivity in the millivolt range for measuring the voltage (V_{mdc}) applied to the transformer winding,

R_{dc} is the resistance of the transformer winding being measured,

R_t is a resistor for reducing the time constant of the circuit, and

V_{dc} is a source of dc voltage for supplying power to the measuring circuit.

(b) To perform the measurement, turn on the source to produce current no larger than 15 percent of the rated current for the winding. Wait until the current and voltage readings have stabilized and then take simultaneous readings of voltage and current. Determine the winding resistance R_{dc} by using equation 3–4 as follows:

$$R_{dc} = \left(V_{mdc}/I_{mdc}\right) \qquad (3\text{-}4)$$

Where:

V_{mdc} is the voltage measured by the voltmeter V, and

I_{mdc} is the current measured by the ammeter A.

(c) As shown in Figure 3.3, separate current and voltage leads must be brought to the transformer terminals. (This eliminates the errors due to lead and contact resistance.)

3.3.3 *Resistance Meters.*

Resistance meters may be based on voltmeter-ammeter, or resistance bridge, or some other operating principle. Any meter used to measure a transformer's winding resistance must have specifications for resistance range, current range, and ability to measure highly inductive resistors that cover the characteristics of the transformer being tested. Also the meter's specifications for accuracy must meet the applicable criteria of Table 2.1 in section 2.0.

3.4 *Precautions in Measuring Winding Resistance.*

3.4.1 *Required actions.*

The following guidelines must be observed when making resistance measurements:

(a) Use separate current and voltage leads when measuring small (<10 ohms) resistance.

(b) Use null detectors in bridge circuits, and measuring instruments in voltmeter-ammeter circuits, that have sensitivity and resolution sufficient to enable observation of at least 0.1 percent change in the measured resistance.

(c) Maintain the dc test current at or below 15 percent of the rated winding current.

(d) Inclusion of a stabilizing resistor R_t (see section 3.4.2) will require higher source voltage.

(e) Disconnect the null detector (if a bridge circuit is used) and voltmeter from the circuit before the current is switched off, and switch off current by a suitable insulated switch.

3.4.2 *Guideline for Time Constant.*

(a) The following guideline is suggested for the tester as a means to facilitate the measurement of resistance in accordance with the accuracy requirements of section 2.0:

(b) The accurate reading of resistance R_{dc} may be facilitated by shortening the time constant. This is done by introducing a resistor R_t in series with the winding under test in both the bridge and voltmeter-ammeter circuits as shown in Figures 3.1 to 3.3. The relationship for the time constant is:

$$T_c = \left(L_{tc}/R_{tc}\right) \qquad (3\text{-}5)$$

Where:

T_c is the time constant in seconds,

L_{tc} is the total magnetizing and leakage inductance of the winding under test, in henries, and

R_{tc} is the total resistance in ohms, consisting of R_t in series with the winding resistance R_{dc} and the resistance R_s of the standard resistor in the bridge circuit.

(c) Because R_{tc} is in the denominator of the expression for the time constant, increasing the resistance R_{tc} will decrease the time constant. If the time constant in a given test circuit is too long for the resistance readings to be stable, then a higher resistance can be substituted for the existing R_{tc}, and successive replacements can be made until adequate stability is reached.

3.5 *Conversion of Resistance Measurements.*

(a) Resistance measurements must be corrected, from the temperature at which the winding resistance measurements were made, to the reference temperature. As specified in these test procedures, the reference temperature for liquid-immersed transformers loaded at 50 percent of the rated load is 55 °C. For medium-voltage, dry-type transformers loaded at 50 percent of the rated load, and for low-voltage, dry-type transformers loaded at 35 percent of the rated load, the reference temperature is 75 °C.

(b) Correct the measured resistance to the resistance at the reference temperature using equation 3–6 as follows:

$$R_{ts} = R_{dc}\left[\left(T_s + T_k\right)/\left(T_{dc} + T_k\right)\right] \qquad (3\text{-}6)$$

Where:

R_{ts} is the resistance at the reference temperature, T_s,

R_{dc} is the measured resistance at temperature, T_{dc},

T_s is the reference temperature in °C,

T_{dc} is the temperature at which resistance was measured in °C, and

T_k is 234.5 °C for copper or 225 °C for aluminum.

4.0 Loss Measurement

4.1 *General Considerations.*

The efficiency of a transformer is computed from the total transformer losses, which are determined from the measured value of the no-load loss and load loss power components. Each of these two power loss components is measured separately using test sets that are identical, except that shorting straps are added for the load-loss test. The measured quantities will need correction for instrumentation losses and may need corrections for known phase angle errors in measuring equipment and for the waveform distortion in the test voltage. Any power loss not measured at the applicable reference temperature must be adjusted to that reference temperature. The measured load loss must also be adjusted to a specified output loading level if not measured at the specified output loading level. Test distribution transformers designed for harmonic currents using a sinusoidal waveform (k=1).

4.2 *Measurement of Power Losses.*

4.2.1 *No-Load Loss.*

Measure the no-load loss and apply corrections as described in section 4.4, using the appropriate test set as described in section 4.3.

4.2.2 *Load Loss.*

Measure the load loss and apply corrections as described in section 4.5, using the appropriate test set as described in section 4.3.

4.3 *Test Sets.*

(a) The same test set may be used for both the no-load loss and load loss measurements provided the range of the test set encompasses the test requirements of both tests. Calibrate the test set to national standards to meet the tolerances in Table 2.1 in section 2.0. In addition, the wattmeter, current measuring system and voltage measuring system must be calibrated separately if the overall test set calibration is outside the tolerance as specified in section 2.0 or the individual phase angle error exceeds the values specified in section 4.5.3.

(b) A test set based on the wattmeter-voltmeter-ammeter principle may be used to measure the power loss and the applied voltage and current of a transformer where the transformer's test current and voltage are within the measurement capability of the measuring instruments. Current and voltage transformers, known collectively as instrument transformers, or other scaling devices such as resistive or capacitive dividers for voltage, may be used in the above circumstance, and must be used together with instruments to measure current, voltage, or power where the current or voltage of the transformer under test exceeds the measurement capability of such instruments. Thus, a test set may include a combination of measuring instruments and instrument transformers (or other scaling devices), so long as the current or voltage of the transformer under test does not exceed the measurement capability of any of the instruments.

4.3.1 *Single-Phase Test Sets.*

Use these for testing single-phase distribution transformers.

4.3.1.1 *Without Instrument Transformers.*

(a) A single-phase test set without an instrument transformer is shown in Figure 4.1.

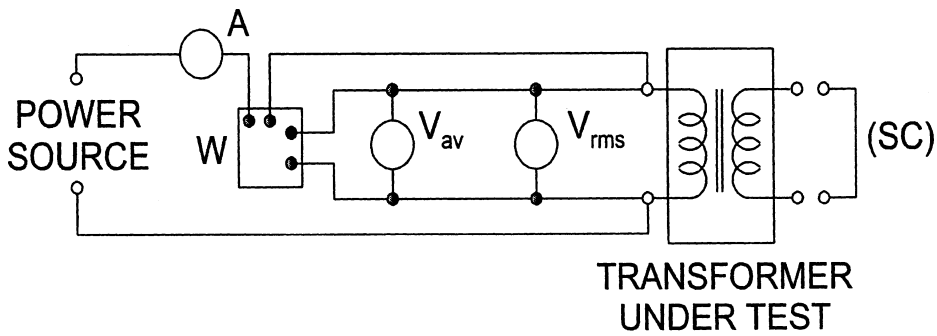

Figure 4.1 Single-Phase Test Set Without Instrument Transformers

Where:

W is a wattmeter used to measure P_{nm} and P_{lm}, the no-load and load loss power, respectively,

V_{rms} is a true root-mean-square (rms) voltmeter used to measure $V_{r(nm)}$ and V_{lm}, the rms test voltages in no-load and load loss measurements, respectively,

V_{av} is an average sensing voltmeter, calibrated to indicate rms voltage for sinusoidal waveforms and used to measure $V_{a(nm)}$, the average voltage in no-load loss measurements,

A is an rms ammeter used to measure test current, especially I_{lm}, the load loss current, and

(SC) is a conductor for providing a short-circuit across the output windings for the load loss measurements.

(b) Either the primary or the secondary winding can be connected to the test set. However, more compatible voltage and current levels for the measuring instruments are available if for no-load loss measurements the secondary (low voltage) winding is connected to the test set, and for load loss measurements the primary winding is connected to the test set. Use the average-sensing voltmeter, V_{av}, only in no-load loss measurements.

4.3.1.2 *With Instrument Transformers.*

A single-phase test set with instrument transformers is shown in Figure 4.2. This circuit has the same four measuring instruments as that in Figure 4.1. The current and voltage transformers, designated as (CT) and (VT), respectively, are added.

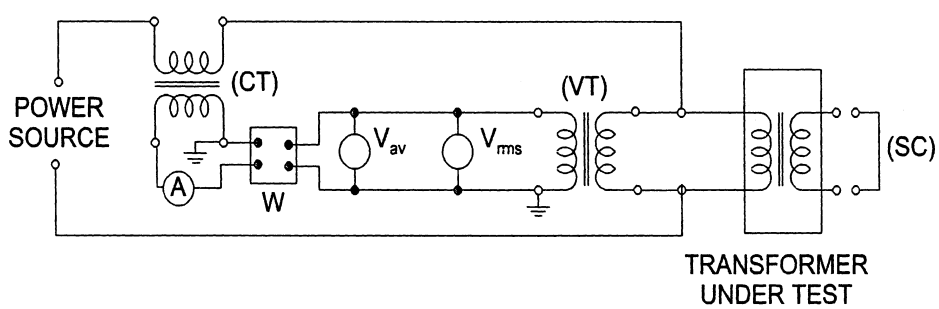

Figure 4.2 Single-Phase Test Set With Instrument Transformers

4.3.2 *Three-Phase Test Sets.*

Use these for testing three-phase distribution transformers. Use in a four-wire, three-wattmeter test circuit.

4.3.2.1 *Without Instrument Transformers.*

(a) A three-phase test set without instrument transformers is shown in Figure 4.3. This test set is essentially the same circuit

shown in Figure 4.1 repeated three times, and the instruments are individual devices as shown. As an alternative, the entire instrumentation system of a three-phase test set without transformers may consist of a multi-function analyzer.

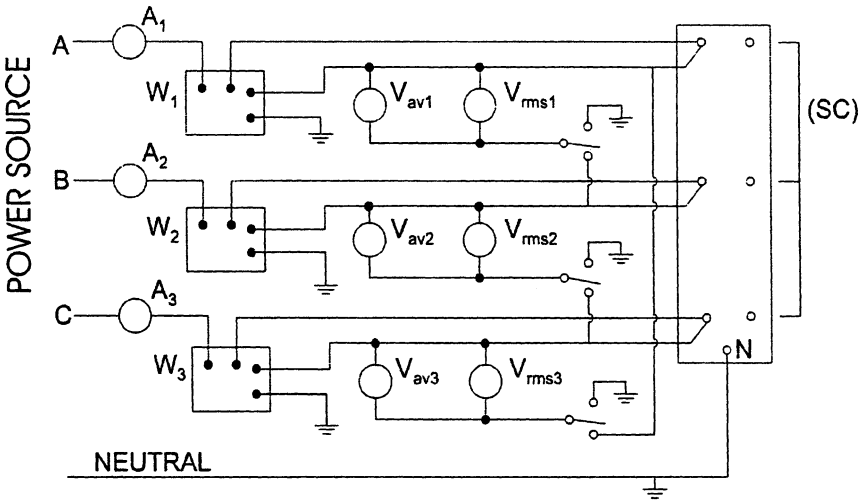

Figure 4.3 Three-Phase Test Set Without Instrument Transformers

(b) Either group of windings, the primary or the secondary, can be connected in wye or delta configuration. If both groups of windings are connected in the wye configuration for the no-load test, the neutral of the winding connected to the test set must be connected to the neutral of the source to provide a return path for the neutral current.

(c) In the no-load loss measurement, the voltage on the winding must be measured. Therefore a provision must be made to switch the voltmeters for line-to-neutral measurements for wye-connected windings and for line-to-line measurements for delta-connected windings.

4.3.2.2 *With Instrument Transformers.*

A three-phase test set with instrument transformers is shown in Figure 4.4. This test set is essentially the same circuit shown in Figure 4.2 repeated three times. Provision must be made to switch the voltmeters for line-to-neutral and line-to-line measurements as in section 4.3.2.1. The voltage sensors (''coils'') of the wattmeters must always be connected in the line-to-neutral configuration.

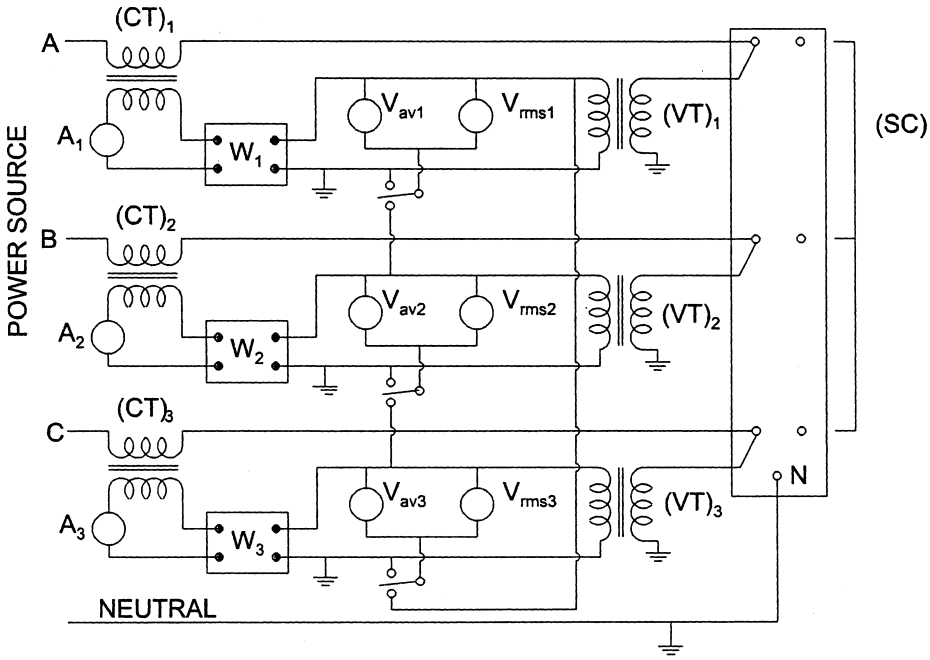

Figure 4.4 Three-Phase Test Set with Instrument Transformers

4.3.2.3 *Test Set Neutrals.*

If the power source in the test circuit is wye-connected, ground the neutral. If the power source in the test circuit is delta-connected, use a grounding transformer to obtain neutral and ground for the test.

4.4 *No-Load Losses: Measurement and Calculations.*

4.4.1 *General Considerations.*

Measurement corrections are permitted but not required for instrumentation losses and for losses from auxiliary devices. Measurement corrections are required:

(a) When the waveform of the applied voltage is non-sinusoidal; and

(b) When the core temperature or liquid temperature is outside the 20 °C ±10 °C range.

4.4.2 *No-Load Loss Test.*

(a) The purpose of the no-load loss test is to measure no-load losses at a specified excitation voltage and a specified frequency. The no-load loss determination must be based on a sine-wave voltage corrected to the reference temperature. Connect either of the transformer windings, primary or secondary, to the appropriate test set of Figures 4.1 to 4.4, giving consideration to section 4.4.2(a)(2). Leave the unconnected winding(s) open circuited. Apply the rated voltage at rated frequency, as measured by the average-sensing voltmeter, to the transformer. Take the readings of the wattmeter(s) and the average-sensing and true rms voltmeters. Observe the following precautions:

(1) Voltmeter connections. When correcting to a sine-wave basis using the average-voltmeter method, the voltmeter connections must be such that the waveform applied to the voltmeters is the same as the waveform across the energized windings.

(2) Energized windings. Energize either the high voltage or the low voltage winding of the transformer under test.

(3) Voltage and frequency. The no-load loss test must be conducted with rated voltage impressed across the transformer terminals using a voltage source at a frequency equal to the rated frequency of the transformer under test.

(b) Adjust the voltage to the specified value as indicated by the average-sensing voltmeter. Record the values of rms voltage, rms current, electrical power, and average voltage as close to simultaneously as possible. For a three-phase transformer, take all of the readings on one phase before proceeding to the next, and record the average of the three rms voltmeter readings as the rms voltage value.

NOTE: When the tester uses a power supply that is not synchronized with an electric utility grid, such as a dc/ac motor-generator

set, check the frequency and maintain it within ±0.5 percent of the rated frequency of the transformer under test. A power source that is directly connected to, or synchronized with, an electric utility grid need not be monitored for frequency.

4.4.3 *Corrections.*

4.4.3.1 *Correction for Instrumentation Losses.* Measured losses attributable to the voltmeters and wattmeter voltage circuit, and to voltage transformers if they are used, may be deducted from the total no-load losses measured during testing.

4.4.3.2 *Correction for Non-Sinusoidal Applied Voltage.*

(a) The measured value of no-load loss must be corrected to a sinusoidal voltage, except when waveform distortion in the test voltage causes the magnitude of the correction to be less than 1 percent. In such a case, no correction is required.

(b) To make a correction where the distortion requires a correction of 5 percent or less, use equation 4–1. If the distortion requires a correction to be greater than 5 percent, improve the test voltage and re-test. Repeat until the distortion requires a correction of 5 percent or less.

(c) Determine the no-load losses of the transformer corrected for sine-wave basis from the measured value by using equation 4–1 as follows:

$$P_{ncl} = \frac{P_{nm}}{P_1 + kP_2} \qquad (4\text{-}1)$$

Where:

P_{ncl} is the no-load loss corrected to a sine-wave basis at the temperature (T_{nm}) at which no-load loss is measured,

P_{nm} is the measured no-load loss at temperature T_{nm},

P_1 is the per unit hysteresis loss,

P_2 is the per unit eddy-current loss,

$P_1 + P_2 = 1$,

$$k = \left(\frac{V_{r(nm)}}{V_{a(nm)}}\right)^2,$$

$V_{r(nm)}$ is the test voltage measured by rms voltmeter, and

$V_{a(nm)}$ is the test voltage measured by average-voltage voltmeter.

(d) The two loss components (P_1 and P_2) are assumed equal in value, each assigned a value of 0.5 per unit, unless the actual measurement-based values of hysteresis and eddy-current losses are available (in per unit form), in which case the actual measurements apply.

4.4.3.3 *Correction of No-Load Loss to Reference Temperature.*

After correcting the measured no-load loss for waveform distortion, correct the loss to the reference temperature of 20 °C. If the no-load loss measurements were made between 10 °C and 30 °C, this correction is not required. If the correction to reference temperature is applied, then the core temperature of the transformer during no-load loss measurement (T_{nm}) must be determined within ±10 °C of the true average core temperature. Correct the no-load loss to the reference temperature by using equation 4–2 as follows:

$$P_{nc} = P_{ncl}\left[1 + 0.00065\left(T_{nm} - T_{nr}\right)\right] \qquad (4\text{-}2)$$

Where:

P_{nc} is the no-load losses corrected for waveform distortion and then to the reference temperature of 20 °C,

P_{nc1} is the no-load losses, corrected for waveform distortion, at temperature T_{nm},

T_{nm} is the core temperature during the measurement of no-load losses, and

T_{nr} is the reference temperature, 20 °C.

4.5 *Load Losses: Measurement and Calculations.*

4.5.1 *General Considerations.*

(a) The load losses of a transformer are those losses incident to a specified load carried by the transformer. Load losses consist of ohmic loss in the windings due to the load current and stray losses due to the eddy currents induced by the leakage flux in the windings, core clamps, magnetic shields, tank walls, and other conducting parts. The ohmic loss of a transformer varies directly with temperature, whereas the stray losses vary inversely with temperature.

(b) For a transformer with a tap changer, conduct the test at the rated current and rated-voltage tap position. For a transformer that has a configuration of windings which allows for more than one nominal rated voltage, determine its load losses either in the winding configuration in which the highest losses occur or in each winding configuration in which the transformer can operate.

4.5.2 *Tests for Measuring Load Losses.*

(a) Connect the transformer with either the high-voltage or low-voltage windings to the appropriate test set. Then short-circuit the winding that was not connected to the test set. Apply a voltage at the rated frequency (of the transformer under test) to the connected windings to produce the rated current in the transformer. Take the readings of the wattmeter(s), the ammeters(s), and rms voltmeter(s).

(b) Regardless of the test set selected, the following preparatory requirements must be satisfied for accurate test results:

(1) Determine the temperature of the windings using the applicable method in section 3.2.1 or section 3.2.2.

(2) The conductors used to short-circuit the windings must have a cross-sectional

area equal to, or greater than, the corresponding transformer leads, or, if the tester uses a different method to short-circuit the windings, the losses in the short-circuiting conductor assembly must be less than 10 percent of the transformer's load losses.

(3) When the tester uses a power supply that is not synchronized with an electric utility grid, such as a dc/ac motor-generator set, follow the provisions of the ''Note'' in section 4.4.2.

4.5.3 *Corrections.*

4.5.3.1 *Correction for Losses from Instrumentation and Auxiliary Devices.*

4.5.3.1.1 *Instrumentation Losses.*

Measured losses attributable to the voltmeters, wattmeter voltage circuit and short-circuiting conductor (SC), and to the voltage transformers if they are used, may be deducted from the total load losses measured during testing.

4.5.3.1.2 *Losses from Auxiliary Devices.*

Measured losses attributable to auxiliary devices (e.g., circuit breakers, fuses, switches) installed in the transformer, if any, that are not part of the winding and core assembly, may be excluded from load losses measured during testing. To exclude these losses, either (1) measure transformer losses without the auxiliary devices by removing or bypassing them, or (2) measure transformer losses with the auxiliary devices connected, determine the losses associated with the auxiliary devices, and deduct these losses from the load losses measured during testing.

4.5.3.2 *Correction for Phase Angle Errors.*

(a) Corrections for phase angle errors are not required if the instrumentation is calibrated over the entire range of power factors and phase angle errors. Otherwise, determine whether to correct for phase angle errors from the magnitude of the normalized per unit correction, β_n, obtained by using equation 4–3 as follows:

$$\beta_n = \frac{V_{lm} I_{lm} (\beta_w - \beta_v + \beta_c) \sin \phi}{p_{lm}} \qquad (4\text{-}3)$$

(b) The correction must be applied if β_n is outside the limits of ±0.01. If β_n is within the limits of ±0.01, the correction is permitted but not required.

(c) If the correction for phase angle errors is to be applied, first examine the total system phase angle ($\beta_w - \beta_v + \beta_c$). Where the total system phase angle is equal to or less than ±12 milliradians (±41 minutes), use either equation 4–4 or 4–5 to correct the measured load loss power for phase angle errors, and where the total system phase angle exceeds ±12 milliradians (±41 minutes) use equation 4–5, as follows:

$$P_{lcl} = P_{lm} - V_{lm} I_{lm} (\beta_w - \beta_v + \beta_c) \sin \phi \qquad (4\text{-}4)$$

$$P_{lcl} = V_{lm} I_{lm} \cos(\phi + \beta_w - \beta_v + \beta_c) \qquad (4\text{-}5)$$

(d) The symbols in this section (4.5.3.2) have the following meanings:

P_{lcl} is the corrected wattmeter reading for phase angle errors,

P_{lm} is the actual wattmeter reading,

V_{lm} is the measured voltage at the transformer winding,

I_{lm} is the measured rms current in the transformer winding,

$$\phi = \cos^{-1} \frac{P_{lm}}{V_{lm} I_{lm}}$$

is the measured phase angle between V_{lm} and I_{lm},

β_w is the phase angle error (in radians) of the wattmeter; the error is positive if the phase angle between the voltage and current phasors as sensed by the wattmeter is smaller than the true phase angle, thus effectively increasing the measured power,

β_v is the phase angle error (in radians) of the voltage transformer; the error is positive if the secondary voltage leads the primary voltage, and

β_c is the phase angle error (in radians) of the current transformer; the error is positive if the secondary current leads the primary current.

(e) The instrumentation phase angle errors used in the correction equations must be specific for the test conditions involved.

4.5.3.3 *Temperature Correction of Load Loss.*

(a) When the measurement of load loss is made at a temperature T_{lm} that is different from the reference temperature, use the procedure summarized in the equations 4–6 to 4–10 to correct the measured load loss to the reference temperature. The symbols used in these equations are defined at the end of this section.

(b) Calculate the ohmic loss (P_e) by using equation 4–6 as follows:

$$P_e = P_{e(p)} + P_{e(s)}$$
$$= I^2_{lm(p)} R_{dc(p)} \frac{T_{k(p)} + T_{lm}}{T_{k(p)} + T_{dc}} + I^2_{lm(s)} R_{dc(s)} \frac{T_{k(s)} + T_{lm}}{T_{k(s)} + T_{dc}}$$
$$= I^2_{lm(p)} \left[R_{dc(p)} \frac{T_{k(p)} + T_{lm}}{T_{k(p)} + T_{dc}} + \left[\frac{N_1}{N_2} \right]^2 R_{dc(s)} \frac{T_{k(s)} + T_{lm}}{T_{k(s)} + T_{dc}} \right] \qquad (4\text{-}6)$$

(c) Obtain the stray loss by subtracting the calculated ohmic loss from the measured load loss, by using equation 4–7 as follows:

$$P_s = P_{lc1} - P_e \qquad (4\text{-}7)$$

(d) Correct the ohmic and stray losses to the reference temperature for the load loss by using equations 4–8 and 4–9, respectively, as follows:

$$P_{er} = P_{e(p)} \frac{T_{k(p)} + T_{lr}}{T_{k(p)} + T_{lm}} + P_{e(s)} \frac{T_{k(s)} + T_{lr}}{T_{k(s)} + T_{lm}}$$
$$= I^2_{lm(p)} \left[R_{dc(p)} \frac{T_{k(p)} + T_{lr}}{T_{k(p)} + T_{dc}} + \left[\frac{N_1}{N_2} \right]^2 R_{dc(s)} \frac{T_{k(s)} + T_{lr}}{T_{k(s)} + T_{dc}} \right] \qquad (4\text{-}8)$$

$$P_{sr} = \left(P_{lc1} - P_e \right) \frac{T_k + T_{lm}}{T_k + T_{lr}} \qquad (4\text{-}9)$$

(e) Add the ohmic and stray losses, corrected to the reference temperature, to give the load loss, P_{lc2}, at the reference temperature, by using equation 4–10 as follows:

$$P_{lc2} = P_{er} + P_{sr}$$
$$= I^2_{lm(p)} \left[R_{dc(p)} \frac{T_{k(p)} + T_{lr}}{T_{k(p)} + T_{dc}} + \left[\frac{N_1}{N_2} \right]^2 R_{dc(s)} \frac{T_{k(s)} + T_{lr}}{T_{k(s)} + T_{dc}} \right]$$
$$+ \left[P_{lc1} - I^2_{lm(p)} \left[R_{dc(p)} \frac{T_{k(p)} + T_{lm}}{T_{k(p)} + T_{dc}} + \left[\frac{N_1}{N_2} \right]^2 R_{dc(s)} \frac{T_{k(s)} + T_{lm}}{T_{k(s)} + T_{dc}} \right] \right] \frac{T_k + T_{lm}}{T_k + T_{lr}} \qquad (4\text{-}10)$$

(f) The symbols in this section (4.5.3.3) have the following meanings:

$I_{lm(p)}$ is the primary current in amperes,

$I_{lm(s)}$ is the secondary current in amperes,

P_e is the ohmic loss in the transformer in watts at the temperature T_{lm},

$P_{e(p)}$ is the ohmic loss in watts in the primary winding at the temperature T_{lm},

$P_{e(s)}$ is the ohmic loss in watts in the secondary winding at the temperature T_{lm},
P_{er} is the ohmic loss in watts corrected to the reference temperature,
P_{lc1} is the measured load loss in watts, corrected for phase angle error, at the temperature T_{lm},
P_{lc2} is the load loss at the reference temperature,
P_s is the stray loss in watts at the temperature T_{lm},
P_{sr} is the stray loss in watts corrected to the reference temperature,
$R_{dc(p)}$ is the measured dc primary winding resistance in ohms,
$R_{dc(s)}$ is the measured dc secondary winding resistance in ohms,
T_k is the critical temperature in degrees Celsius for the material of the transformer windings. Where copper is used in both primary and secondary windings, T_k is 234.5 °C; where aluminum is used in both primary and secondary windings, T_k is 225 °C; where both copper and aluminum are used in the same transformer, the value of 229 °C is used for T_k,
$T_{k(p)}$ is the critical temperature in degrees Celsius for the material of the primary winding: 234.5 °C if copper and 225 °C if aluminum,
$T_{k(s)}$ is the critical temperature in degrees Celsius for the material of the secondary winding: 234.5 °C if copper and 225 °C if aluminum,
T_{lm} is the temperature in degrees Celsius at which the load loss is measured,
T_{lr} is the reference temperature for the load loss in degrees Celsius,
T_{dc} is the temperature in degrees Celsius at which the resistance values are measured, and
N_1/N_2 is the ratio of the number of turns in the primary winding (N_1) to the number of turns in the secondary winding (N_2); for a primary winding with taps, N_1 is the number of turns used when the voltage applied to the primary winding is the rated primary voltage.

5.0 Determining the Efficiency Value of the Transformer

This section presents the equations to use in determining the efficiency value of the transformer at the required reference conditions and at the specified loading level. The details of measurements are described in sections 3.0 and 4.0. For a transformer that has a configuration of windings which allows for more than one nominal rated voltage, determine its efficiency either at the voltage at which the highest losses occur or at each voltage at which the transformer is rated to operate.

5.1 *Output Loading Level Adjustment.*

If the output loading level for energy efficiency is different from the level at which the load loss power measurements were made, then adjust the corrected load loss power, P_{lc2}, by using equation 5–1 as follows:

$$P_{lc} = P_{lc2}\left[\frac{P_{os}}{P_{or}}\right]^2 = P_{lc2}L^2 \qquad (5\text{-}1)$$

Where:

P_{lc} is the adjusted load loss power to the specified energy efficiency load level,
P_{lc2} is as calculated in section 4.5.3.3,
P_{or} is the rated transformer apparent power (name plate),
P_{os} is the specified energy efficiency load level, where $P_{os} = P_{or}L$, and
L is the per unit load level, e.g., if the load level is 50 percent then ''L'' will be 0.5.

5.2 *Total Loss Power Calculation.*

Calculate the corrected total loss power by using equation 5–2 as follows:

$$P_{ts} = P_{nc} + P_{lc} \qquad (5\text{-}2)$$

Where:

P_{ts} is the corrected total loss power adjusted for the transformer output loading specified by the standard,
P_{nc} is as calculated in section 4.4.3.3, and
P_{lc} is as calculated in section 5.1.

5.3 *Energy Efficiency Calculation.*

Calculate efficiency (η) in percent at specified energy efficiency load level, P_{os}, by using equation 5–3 as follows:

$$\eta = 100\left(\frac{P_{os}}{P_{os} + P_{ts}}\right) \qquad (5\text{-}3)$$

Where:

P_{os} is as described and calculated in section 5.1, and
P_{ts} is as described and calculated in section 5.2.

5.4 *Significant Figures in Power Loss and Efficiency Data.*

In measured and calculated data, retain enough significant figures to provide at least 1 percent resolution in power loss data and 0.01 percent resolution in efficiency data.

6.0 Test Equipment Calibration and Certification

Maintain and calibrate test equipment and measuring instruments, maintain calibration records, and perform other test and measurement quality assurance procedures according to the following sections. The calibration of the test set must confirm the accuracy of the test set to that specified in section 2.0, Table 2.1.

6.1 *Test Equipment.*

The party performing the tests shall control, calibrate and maintain measuring and test equipment, whether or not it owns the

equipment, has the equipment on loan, or the equipment is provided by another party. Equipment shall be used in a manner which assures that measurement uncertainty is known and is consistent with the required measurement capability.

6.2 *Calibration and Certification.*

The party performing the tests must:

(a) Identify the measurements to be made, the accuracy required (section 2.0) and select the appropriate measurement and test equipment;

(b) At prescribed intervals, or prior to use, identify, check and calibrate, if needed, all measuring and test equipment systems or devices that affect test accuracy, against certified equipment having a known valid relationship to nationally recognized standards; where no such standards exist, the basis used for calibration must be documented;

(c) Establish, document and maintain calibration procedures, including details of equipment type, identification number, location, frequency of checks, check method, acceptance criteria and action to be taken when results are unsatisfactory;

(d) Ensure that the measuring and test equipment is capable of the accuracy and precision necessary, taking into account the voltage, current and power factor of the transformer under test;

(e) Identify measuring and test equipment with a suitable indicator or approved identification record to show the calibration status;

(f) Maintain calibration records for measuring and test equipment;

(g) Assess and document the validity of previous test results when measuring and test equipment is found to be out of calibration;

(h) Ensure that the environmental conditions are suitable for the calibrations, measurements and tests being carried out;

(i) Ensure that the handling, preservation and storage of measuring and test equipment is such that the accuracy and fitness for use is maintained; and

(j) Safeguard measuring and test facilities, including both test hardware and test software, from adjustments which would invalidate the calibration setting.

[71 FR 24999, Apr. 27, 2006, as amended at 71 FR 60662, Oct. 16, 2006]

EFFECTIVE DATE NOTE: At 71 FR 24999, Apr. 27, 2006, appendix A to subpart K of part 431 was added, effective May 30, 2006, except for section 6.2(f) and section 6.2 (b) and (c) which contain information collection requirements and will not become effective until approval has been given by the Office of Management and Budget.

Subpart L—Illuminated Exit Signs

SOURCE: 70 FR 60417, Oct. 18, 2005, unless otherwise noted.

§ 431.201 Purpose and scope.

This subpart contains energy conservation requirements for illuminated exit signs, pursuant to Part B of Title III of the Energy Policy and Conservation Act, as amended, 42 U.S.C. 6291–6309.

§ 431.202 Definitions concerning illuminated exit signs.

Basic model means all units of a given type of covered product (or class thereof) manufactured by one manufacturer, having the same primary energy source, and which have essentially identical electrical, physical, and functional (or hydraulic) characteristics that affect energy consumption, energy efficiency, water consumption, or water efficiency.

Face means an illuminated side of an illuminated exit sign.

Illuminated exit sign means a sign that—

(1) Is designed to be permanently fixed in place to identify an exit; and

(2) Consists of an electrically powered integral light source that—

(i) Illuminates the legend ''EXIT'' and any directional indicators; and

(ii) Provides contrast between the legend, any directional indicators, and the background.

Input power demand means the amount of power required to continuously illuminate an exit sign model, measured in watts (W). For exit sign models with rechargeable batteries, input power demand shall be measured with batteries at full charge.

[70 FR 60417, Oct. 18, 2005, as amended at 71 FR 71372, Dec. 8, 2006; 76 FR 12504, Mar. 7, 2011]

TEST PROCEDURES

§ 431.203 Materials incorporated by reference.

(a) *General.* The Department incorporates by reference the following test procedures into subpart L of part 431. The Director of the Federal Register has approved the material listed in

paragraph (b) of this section for incorporation by reference in accordance with 5 U.S.C. 552(a) and 1 CFR part 51. Any subsequent amendment to this material by the standard-setting organization will not affect the DOE test procedures unless and until DOE amends its test procedures. The Department incorporates the material as it exists on the date of the approval by the Federal Register and a notice of any change in the material will be published in the FEDERAL REGISTER.

(b) *Test procedure incorporated by reference.* Environmental Protection Agency ''ENERGY STAR Program Requirements for Exit Signs,'' Version 2.0 issued January 1, 1999.

(c) *Availability of reference*—(1) *Inspection of test procedure.* The test procedure incorporated by reference are available for inspection at:

(i) National Archives and Records Administration (NARA). For information on the availability of this material at NARA, call (202) 741–6030, or go to: *http://www.archives.gov/federal_register/code_of_federal_regulations/ibr_locations.html.*

(ii) U.S. Department of Energy, Forrestal Building, Room 1J–018 (Resource Room of the Building Technologies Program), 1000 Independence Avenue, SW., Washington, DC 20585–0121, (202) 586–9127, between 9 a.m. and 4 p.m., Monday through Friday, except Federal holidays.

(2) *Obtaining copies of the standard.* Copies of the Environmental Protection Agency ''ENERGY STAR Program Requirements for Exit Signs,'' Version 2.0, may be obtained from the Environmental Protection Agency, Ariel Rios Building, 1200 Pennsylvania Avenue, NW., Washington, DC 20460, (202) 272–0167 or at*http://www.epa.gov.*

[71 FR 71373, Dec. 8, 2006]

§431.204 Uniform test method for the measurement of energy consumption of illuminated exit signs.

(a) *Scope.* This section provides the test procedure for measuring, pursuant to EPCA, the input power demand of illuminated exit signs. For purposes of this part 431 and EPCA, the test procedure for measuring the input power demand of illuminated exit signs shall be the test procedure specified in §431.203(b).

(b) *Testing and Calculations.* Determine the energy efficiency of each covered product by conducting the test procedure, set forth in the Environmental Protection Agency's ''ENERGY STAR Program Requirements for Exit Signs,'' Version 2.0, section 4 (Test Criteria), ''Conditions for testing'' and ''Input power measurement.'' (Incorporated by reference, see §431.203)

[71 FR 71373, Dec. 8, 2006]

ENERGY CONSERVATION STANDARDS

§431.206 Energy conservation standards and their effective dates.

An illuminated exit sign manufactured on or after January 1, 2006, shall have an input power demand of 5 watts or less per face.

Subpart M—Traffic Signal Modules and Pedestrian Modules

SOURCE: 70 FR 60417, Oct. 18, 2005, unless otherwise noted.

§431.221 Purpose and scope.

This subpart contains energy conservation requirements for traffic signal modules and pedestrian modules, pursuant to Part B of Title III of the Energy Policy and Conservation Act, as amended, 42 U.S.C. 6291–6309.

§431.222 Definitions concerning traffic signal modules and pedestrian modules.

Basic model means all units of a given type of covered product (or class thereof) manufactured by one manufacturer, having the same primary energy source, and which have essentially identical electrical, physical, and functional (or hydraulic) characteristics that affect energy consumption, energy efficiency, water consumption, or water efficiency.

Maximum wattage means the power consumed by the module after being operated for 60 minutes while mounted in a temperature testing chamber so that the lensed portion of the module is outside the chamber, all portions of the module behind the lens are within the chamber at a temperature of 74 °C and the air temperature in front of the

lens is maintained at a minimum of 49 °C.

Nominal wattage means the power consumed by the module when it is operated within a chamber at a temperature of 25 °C after the signal has been operated for 60 minutes.

Pedestrian module means a light signal used to convey movement information to pedestrians.

Traffic signal module means a standard 8-inch (200 mm) or 12-inch (300 mm) traffic signal indication that—

(1) Consists of a light source, a lens, and all other parts necessary for operation; and

(2) Communicates movement messages to drivers through red, amber, and green colors.

[70 FR 60417, Oct. 18, 2005, as amended at 71 FR 71373, Dec. 8, 2006; 76 FR 12504, Mar. 7, 2011]

TEST PROCEDURES

§ 431.223 Materials incorporated by reference.

(a) *General.* The Department incorporates by reference the following test procedures into subpart M of part 431. The Director of the Federal Register has approved the material listed in paragraph (b) of this section for incorporation by reference in accordance with 5 U.S.C. 552(a) and 1 CFR part 51. Any subsequent amendment to this material by the standard-setting organization will not affect the DOE test procedures unless and until DOE amends its test procedures. The Department incorporates the material as it exists on the date of the approval by the Federal Register and a notice of any change in the material will be published in the FEDERAL REGISTER.

(b) *List of test procedures incorporated by reference.* (1) Environmental Protection Agency, ''ENERGY STAR Program Requirements for Traffic Signals,'' Version 1.1 issued February 4, 2003.

(2) Institute of Transportation Engineers (ITE), ''Vehicle Traffic Control Signal Heads: Light Emitting Diode (LED) Circular Signal Supplement,'' June 27, 2005.

(c) *Availability of references*—(1) *Inspection of test procedures.* The test procedures incorporated by reference are available for inspection at:

(i) National Archives and Records Administration (NARA). For information on the availability of this material at NARA, call (202) 741–6030, or go to: *http://www.archives.gov/federal_register/code_of_federal_regulations/ibr_locations.html.*

(ii) U.S. Department of Energy, Forrestal Building, Room 1J–018 (Resource Room of the Building Technologies Program), 1000 Independence Avenue, SW., Washington, DC 20585–0121, (202) 586–9127, between 9 a.m. and 4 p.m., Monday through Friday, except Federal holidays.

(2) *Obtaining copies of standards.* Standards incorporated by reference may be obtained from the following sources:

(i) Copies of the Environmental Protection Agency ''ENERGY STAR Program Requirements for Traffic Signals,'' Version 1.1, may be obtained from the Environmental Protection Agency, Ariel Rios Building, 1200 Pennsylvania Avenue, NW., Washington, DC 20460, (202) 272–0167 or at *http://www.epa.gov.*

(ii) Institute of Transportation Engineers, 1099 14th Street, NW., Suite 300 West, Washington, DC 20005–3438, (202) 289–0222, or *ite_staff@ite.org.*

[71 FR 71373, Dec. 8, 2006]

§ 431.224 Uniform test method for the measurement of energy consumption for traffic signal modules and pedestrian modules.

(a) *Scope.* This section provides the test procedures for measuring, pursuant to EPCA, the maximum wattage and nominal wattage of traffic signal modules and pedestrian modules. For purposes of 10 CFR part 431 and EPCA, the test procedures for measuring the maximum wattage and nominal wattage of traffic signal modules and pedestrian modules shall be the test procedures specified in § 431.223(b).

(b) *Testing and Calculations.* Determine the nominal wattage and maximum wattage of each covered traffic signal module or pedestrian module by conducting the test procedure set forth in Environmental Protection Agency,

''ENERGY STAR Program Requirements for Traffic Signals,'' Version 1.1, section 1, ''Definitions,'' and section 4, ''Test Criteria.'' (Incorporated by reference, see § 431.223) Use a wattmeter having an accuracy of ±1% to measure the nominal wattage and maximum wattage of a red and green traffic signal module, and a pedestrian module when conducting the photometric and colormetric tests as specified by the testing procedures in VTCSH 2005.

[71 FR 71373, Dec. 8, 2006]

ENERGY CONSERVATION STANDARDS

§ 431.226 Energy conservation standards and their effective dates.

Any traffic signal module or pedestrian module manufactured on or after January 1, 2006, shall meet both of the following requirements:

(a) Have a nominal wattage and maximum wattage no greater than:

	Maximum wattage (at 74 °C)	Nominal wattage (at 25 °C)
Traffic Signal Module Type:		
12″ Red Ball	17	11
8″ Red Ball	13	8
12″ Red Arrow	12	9
12″ Green Ball	15	15
8″ Green Ball	12	12
12″ Green Arrow	11	11
Pedestrian Module Type:		
Combination Walking Man/Hand	16	13
Walking Man	12	9
Orange Hand	16	13

(b) Be installed with compatible, electrically connected signal control interface devices and conflict monitoring systems.

[70 FR 60417, Oct. 18, 2005, as amended at 71 FR 71374, Dec. 8, 2006]

Subpart N—Unit Heaters

SOURCE: 70 FR 60418, Oct. 18, 2005, unless otherwise noted.

§ 431.241 Purpose and scope.

This subpart contains energy conservation requirements for unit heaters, pursuant to Part B of Title III of the Energy Policy and Conservation Act, as amended, 42 U.S.C. 6291–6309.

§ 431.242 Definitions concerning unit heaters.

Automatic flue damper means a device installed in the flue outlet or in the inlet of or upstream of the draft control device of an individual, automatically operated, fossil fuel-fired appliance that is designed to automatically open the flue outlet during appliance operation and to automatically close the flue outlet when the appliance is in a standby condition.

Automatic vent damper means a device intended for installation in the venting system of an individual, automatically operated, fossil fuel-fired appliance either in the outlet or downstream of the appliance draft control device, which is designed to automatically open the venting system when the appliance is in operation and to automatically close off the venting system when the appliance is in a standby or shutdown condition.

Basic model means all units of a given type of covered product (or class thereof) manufactured by one manufacturer, having the same primary energy source, and which have essentially identical electrical, physical, and functional (or hydraulic) characteristics that affect energy consumption, energy efficiency, water consumption, or water efficiency.

Intermittent ignition device means an ignition device in which the ignition source is automatically shut off when the appliance is in an off or standby condition.

Power venting means a venting system that uses a separate fan, either integral to the appliance or attached to the vent pipe, to convey products of combustion and excess or dilution air through the vent pipe.

Unit heater means a self-contained fan-type heater designed to be installed within the heated space; however, the term does not include a warm air furnace.

Warm air furnace means commercial warm air furnace as defined in § 431.72.

[70 FR 60418, Oct. 18, 2005, as amended at 71 FR 71374, Dec. 8, 2006; 76 FR 12504, Mar. 7, 2011]

TEST PROCEDURES [RESERVED]

ENERGY CONSERVATION STANDARDS

§ 431.246 Energy conservation standards and their effective dates.

A unit heater manufactured on or after August 8, 2008, shall:

(a) Be equipped with an intermittent ignition device; and

(b) Have power venting or an automatic flue damper. An automatic vent damper is an acceptable alternative to an automatic flue damper for those unit heaters where combustion air is drawn from the conditioned space.

[70 FR 60418, Oct. 18, 2005, as amended at 71 FR 71374, Dec. 8, 2006]

Subpart O—Commercial Prerinse Spray Valves

SOURCE: 70 FR 60418, Oct. 18, 2005, unless otherwise noted.

§ 431.261 Purpose and scope.

This subpart contains energy conservation requirements for commercial prerinse spray valves, pursuant to section 135 of the Energy Policy Act of 2005, Pub. L. 109–58.

§ 431.262 Definitions concerning commercial prerinse spray valves.

Basic model means all units of a given type of covered product (or class thereof) manufactured by one manufacturer, having the same primary energy source, and which have essentially identical electrical, physical, and functional (or hydraulic) characteristics that affect energy consumption, energy efficiency, water consumption, or water efficiency.

Commercial prerinse spray valve means a handheld device designed and marketed for use with commercial dishwashing and ware washing equipment that sprays water on dishes, flatware, and other food service items for the purpose of removing food residue before cleaning the items.

[70 FR 60418, Oct. 18, 2005, as amended at 71 FR 71374, Dec. 8, 2006; 76 FR 12504, Mar. 7, 2011]

TEST PROCEDURES

§ 431.263 Materials incorporated by reference.

(a) DOE incorporates by reference the following standard into part 431. The material listed has been approved for incorporation by reference by the Director of the Federal Register in accordance with 5 U.S.C. 552(a) and 1 CFR part 51. Any subsequent amendment to a standard by the standard-setting organization will not affect the DOE regulations unless and until amended by DOE. Material is incorporated as it exists on the date of the approval and a notice of any change in the material will be published in the FEDERAL REGISTER. All approved material is available for inspection at the National Archives and Records Administration (NARA). For information on the availability of this material at NARA, call (202) 741–6030, or go to: *http://www.archives.gov/federal_register/code_of_federal_regulations/ibr_locations.html*. Also, this material is available for inspection at U.S. Department of Energy, Office of Energy Efficiency and Renewable Energy, Building Technologies Program, 6th Floor, 950 L'Enfant Plaza SW., Washington, DC 20024, (202) 586–2945, or go to: *http://www1.eere.energy.gov/buildings/appliance_standards*. This standard can be obtained from the source below.

(b) *ASTM*. American Society for Testing and Materials International, 100 Barr Harbor Drive, P.O. Box C700, West Conshohocken, PA 19428–2959, (610) 832–9585, or got to *http://www.astm.org*.

(1) ASTM Standard F2324–03 (Reapproved 2009), (''ASTM F2324–03 (2009)''), Standard Test Method for Prerinse Spray Valves, approved May 1, 2009; IBR approved for § 431.264.

(2) [Reserved]

[78 FR 62987, Oct. 23, 2013]

§ 431.264 Uniform test method for the measurement of flow rate for commercial prerinse spray valves.

(a) *Scope*. This section provides the test procedure for measuring, pursuant to EPCA, the water consumption flow rate of commercial prerinse spray valves.

(b) *Testing and Calculations*. The test procedure to determine the water consumption flow rate for prerinse spray valves, expressed in gallons per minute (gpm) or liters per minute (L/min), shall be conducted in accordance with the test requirements specified in sections 4.1 and 4.2 (Summary of Test Method), 5.1 (Significance and Use), 6.1 through 6.9 (Apparatus) except 6.5, 9.1 through 9.5 (Preparation of Apparatus), and 10.1 through 10.2.5. (Procedure), and calculations in accordance with sections 11.1 through 11.3.2 (Calculation and Report) of ASTM F2324–03 (2009), (incorporated by reference, see § 431.263). Perform only the procedures pertinent to the measurement of flow rate. Record measurements at the resolution of the test instrumentation. Round off calculations to the same number of significant digits as the previous step. Round the final water consumption value to one decimal place as follows:

(1) A fractional number at or above the midpoint between two consecutive decimal places shall be rounded up to the higher of the two decimal places; or

(2) A fractional number below the midpoint between two consecutive decimal places shall be rounded down to the lower of the two decimal places.

[71 FR 71374, Dec. 8, 2006, as amended at 78 FR 62988, Oct. 23, 2013]

ENERGY CONSERVATION STANDARDS

§ 431.266 Energy conservation standards and their effective dates.

Commercial prerinse spray valves manufactured on or after January 1, 2006, shall have a flow rate of not more than 1.6 gallons per minute.

Subpart P—Mercury Vapor Lamp Ballasts

SOURCE: 70 FR 60418, Oct. 18, 2005, unless otherwise noted.

§ 431.281 Purpose and scope.

This subpart contains energy conservation requirements for mercury vapor lamp ballasts, pursuant to section 135 of the Energy Policy Act of 2005, Pub. L. 109–58.

§ 431.282 Definitions concerning mercury vapor lamp ballasts.

Ballast means a device used with an electric discharge lamp to obtain necessary circuit conditions (voltage, current, and waveform) for starting and operating.

High intensity discharge lamp means an electric-discharge lamp in which—

(1) The light-producing arc is stabilized by the arc tube wall temperature; and

(2) The arc tube wall loading is in excess of 3 Watts/cm^2, including such lamps that are mercury vapor, metal halide, and high-pressure sodium lamps.

Mercury vapor lamp means a high intensity discharge lamp, including clear, phosphor-coated, and self-ballasted screw base lamps, in which the major portion of the light is produced by radiation from mercury typically operating at a partial vapor pressure in excess of 100,000 Pa (approximately 1 atm).

Mercury vapor lamp ballast means a device that is designed and marketed to start and operate mercury vapor lamps intended for general illumination by providing the necessary voltage and current.

Specialty application mercury vapor lamp ballast means a mercury vapor lamp ballast that—

(1) Is designed and marketed for operation of mercury vapor lamps used in quality inspection, industrial processing, or scientific use, including fluorescent microscopy and ultraviolet curing; and

(2) In the case of a specialty application mercury vapor lamp ballast, the label of which—

(i) Provides that the specialty application mercury vapor lamp ballast is 'For specialty applications only, not for general illumination'; and

(ii) Specifies the specific applications for which the ballast is designed.

[74 FR 12074, Mar. 23, 2009]

TEST PROCEDURES [RESERVED]

ENERGY CONSERVATION STANDARDS

§ 431.286 Energy conservation standards and their effective dates.

Mercury vapor lamp ballasts, other than specialty application mercury vapor lamp ballasts, shall not be manufactured or imported after January 1, 2008.

[74 FR 12074, Mar. 23, 2009]

Subpart Q—Refrigerated Bottled or Canned Beverage Vending Machines

SOURCE: 71 FR 71375, Dec. 8, 2006, unless otherwise noted.

§ 431.291 Scope.

This subpart specifies test procedures for certain commercial refrigerated bottled or canned beverage vending machines, pursuant to part C of Title III of the Energy Policy and Conservation Act, as amended, 42 U.S.C. 6311–6316.

§ 431.292 Definitions concerning refrigerated bottled or canned beverage vending machines.

Basic model means all units of a given type of covered product (or class thereof) manufactured by one manufacturer, having the same primary energy source, and which have essentially identical electrical, physical, and functional (or hydraulic) characteristics that affect energy consumption, energy efficiency, water consumption, or water efficiency.

Bottled or canned beverage means a beverage in a sealed container.

Class A means a refrigerated bottled or canned beverage vending machine that is fully cooled, and is not a combination vending machine.

Class B means any refrigerated bottled or canned beverage vending machine not considered to be Class A, and is not a combination vending machine.

Combination vending machine means a refrigerated bottled or canned beverage vending machine that also has non-refrigerated volumes for the purpose of vending other, non-''sealed beverage'' merchandise.

Refrigerated bottled or *canned beverage vending machine* means a commercial refrigerator that cools bottled or canned beverages and dispenses the bottled or canned beverages on payment.

V means the refrigerated volume (ft^3) of the refrigerated bottled or canned beverage vending machine, as measured by ANSI/AHAM HRF–1–2004 (incorporated by reference, see § 431.293).

[71 FR 71375, Dec. 8, 2006, as amended at 74 FR 44967, Aug. 31, 2009; 76 FR 12504, Mar. 7, 2011]

TEST PROCEDURES

§ 431.293 Materials incorporated by reference.

(a) *General.* DOE incorporates by reference the following standards into subpart Q of part 431. The material listed has been approved for incorporation by reference by the Director of the Federal Register in accordance with 5 U.S.C. 552(a) and 1 CFR part 51. Any subsequent amendment to a standard by the standard-setting organization will not affect the DOE regulations unless and until amended by DOE. Material is incorporated as it exists on the date of the approval and a notice of any change in the material will be published in the FEDERAL REGISTER. All approved material is available for inspection at the National Archives and Records Administration (NARA). For information on the availability of this material at NARA, call (202) 741–6030 or visit *http://www.archives.gov/federal_register/code_of_federal_regulations/ibr_locations.html.* This material is also available for inspection at U.S. Department of Energy, Office of Energy Efficiency and Renewable Energy, Building Technologies Program, 6th Floor, 950 L'Enfant Plaza, SW., Washington, DC 20024, 202–586–2945, or visit *http://www1.eere.energy.gov/buildings/appliance_standards.* Standards can be obtained from the sources listed below.

(b) *ANSI.* American National Standards Institute, 25 W. 43rd Street, 4th Floor, New York, NY 10036, 212–642–4900, or visit *http://www.ansi.org.*

(1) ANSI/AHAM HRF–1–2004, Energy, Performance and Capacity of Household Refrigerators, Refrigerator-Freezers and Freezers, approved July 7, 2004, IBR approved for §§ 431.292 and 431.294.

(2) ANSI/ASHRAE Standard 32.1–2004, Methods of Testing for Rating Vending Machines for Bottled, Canned, and Other Sealed Beverages, approved December 2, 2004, IBR approved for § 431.294.

[74 FR 44967, Aug. 31, 2009]

§ 431.294 Uniform test method for the measurement of energy consumption of refrigerated bottled or canned beverage vending machines.

(a) *Scope*. This section provides test procedures for measuring, pursuant to EPCA, the energy consumption of refrigerated bottled or canned beverage vending machines.

(b) *Testing and Calculations*. (1) The test procedure for energy consumption of refrigerated bottled or canned beverage vending machines shall be conducted in accordance with the test procedures specified in section 4, ''Instruments,'' section 5, ''Vending Machine Capacity,'' section 6, ''Test Conditions,'' and sections 7.1 through 7.2.3.2, under ''Test Procedures,'' of ANSI/ASHRAE Standard 32.1–2004, ''Methods of Testing for Rating Vending Machines for Bottled, Canned, and Other Sealed Beverages.'' (Incorporated by reference, see § 431.293) In Section 6.2, ''Voltage and Frequency,'' test equipment with dual nameplate voltages at the lower of the two voltages only.

(2) Determine ''vendible capacity'' of refrigerated bottled or canned beverage vending machines in accordance with the second paragraph of section 5, ''Vending Machine Capacity,'' of ANSI/ASHRAE Standard 32.1–2004, ''Methods of Testing for Rating Vending Machines for Bottled, Canned, and Other Sealed Beverages,'' (Incorporated by reference, see § 431.293) and measure ''refrigerated volume'' of refrigerated bottled or canned beverage vending machines in accordance with the methodology specified in section 5.2, ''Total Refrigerated Volume,'' (excluding subsections 5.2.2.2 through 5.2.2.4) of the ANSI/AHAM HRF–1–2004, ''Energy, Performance and Capacity of Household Refrigerators, Refrigerator-Freezers and Freezers,'' (Incorporated by reference, see §§ 431.63 and 431.293).

ENERGY CONSERVATION STANDARDS

§ 431.296 Energy conservation standards and their effective dates.

Each refrigerated bottled or canned beverage vending machine manufactured on or after August 31, 2012 shall have a maximum daily energy consumption (in kilowatt hours per day), when measured at the 75 °F ±2 °F and 45 ±5% RH condition, that does not exceed the following:

Equipment class	Maximum daily energy consumption (kilowatt hours per day)
Class A	MDEC = 0.055 × V + 2.56.
Class B	MDEC = 0.073 × V + 3.16.
Combination Vending Machines	[Reserved].

[74 FR 44967, Aug. 31, 2009]

Subpart R—Walk-in Coolers and Walk-in Freezers

SOURCE: 74 FR 12074, Mar. 23, 2009, unless otherwise noted.

§ 431.301 Purpose and scope.

This subpart contains energy conservation requirements for walk-in coolers and walk-in freezers, pursuant to Part C of Title III of the Energy Policy and Conservation Act, as amended, 42 U.S.C. 6311–6317.

§ 431.302 Definitions concerning walk-in coolers and walk-in freezers.

Basic model means all components of a given type of walk-in cooler or walk-in freezer (or class thereof) manufactured by one manufacturer, having the same primary energy source, and which have essentially identical electrical, physical, and functional (or hydraulic) characteristics that affect energy consumption, energy efficiency, water consumption, or water efficiency; and

(1) With respect to panels, which do not have any differing features or characteristics that affect U-factor.

(2) [Reserved]

Display door means a door designed for product movement, display, or both, rather than the passage of persons.

Display panel means a panel that is entirely or partially comprised of glass, a transparent material, or both and is used for display purposes.

Door means an assembly installed in an opening on an interior or exterior wall that is used to allow access or close off the opening and that is movable in a sliding, pivoting, hinged, or revolving manner of movement. For walk-in coolers and walk-in freezers, a door includes the door panel, glass, framing materials, door plug, mullion, and any other elements that form the door or part of its connection to the wall.

Envelope means—

(1) The portion of a walk-in cooler or walk-in freezer that isolates the interior, refrigerated environment from the ambient, external environment; and

(2) All energy-consuming components of the walk-in cooler or walk-in freezer that are not part of its refrigeration system.

K-factor means the thermal conductivity of a material.

Manufacturer of a walk-in cooler or walk-in freezer means any person who:

(1) Manufactures a component of a walk-in cooler or walk-in freezer that affects energy consumption, including, but not limited to, refrigeration, doors, lights, windows, or walls; or

(2) Manufactures or assembles the complete walk-in cooler or walk-in freezer.

Panel means a construction component that is not a door and is used to construct the envelope of the walk-in, i.e., elements that separate the interior refrigerated environment of the walk-in from the exterior.

Refrigerated means held at a temperature at or below 55 degrees Fahrenheit using a refrigeration system.

Refrigeration system means the mechanism (including all controls and other components integral to the system's operation) used to create the refrigerated environment in the interior of a walk-in cooler or freezer, consisting of:

(1) A packaged dedicated system where the unit cooler and condensing unit are integrated into a single piece of equipment; or

(2) A split dedicated system with separate unit cooler and condensing unit sections; or

(3) A unit cooler that is connected to a multiplex condensing system.

U-factor means the heat transmission in a unit time through a unit area of a specimen or product and its boundary air films, induced by a unit temperature difference between the environments on each side.

Walk-in cooler and walk-in freezer mean an enclosed storage space refrigerated to temperatures, respectively, above, and at or below 32 degrees Fahrenheit that can be walked into, and has a total chilled storage area of less than 3,000 square feet; however the terms do not include products designed and marketed exclusively for medical, scientific, or research purposes.

[74 FR 12074, Mar. 23, 2009, as amended at 76 FR 12504, Mar. 7, 2011; 76 FR 21604, Apr. 15, 2011; 76 FR 33631, June 9, 2011]

TEST PROCEDURES

§ 431.303 Materials incorporated by reference.

(a) *General*. We incorporate by reference the following standards into subpart R of part 431. The material listed has been approved for incorporation by reference by the Director of the Federal Register in accordance with 5 U.S.C. 552(a) and 1 CFR part 51. Any subsequent amendment to a standard by the standard-setting organization will not affect the DOE regulations unless and until amended by DOE. Material is incorporated as it exists on the date of the approval and a notice of any change in the material will be published in the FEDERAL REGISTER. All approved material is available for inspection at the National Archives and Records Administration (NARA). For information on the availability of this material at NARA, call 202–741–6030 or go to *http://www.archives.gov/federal_register/code_of_federal_regulations/ibr_locations.html*. Also, this material is available for inspection at U.S. Department of Energy, Office of Energy Efficiency and Renewable Energy, Building Technologies Program, 6th Floor, 950 L'Enfant Plaza, SW., Washington, DC 20024, 202–586–2945, between 9 a.m. and 4 p.m., Monday through Friday, except Federal holidays, or go to: *http://www1.eere.energy.gov/buildings/*

appliance_standards/. Standards can be obtained from the sources listed below.

(b) *AHRI*. Air-Conditioning, Heating, and Refrigeration Institute, 2111 Wilson Boulevard, Suite 500, Arlington, VA 22201, (703) 600–0366, or *http://www.ahrinet.org*.

(1) AHRI 1250 (I–P)–2009, (''AHRI 1250''), 2009 Standard for Performance Rating of Walk-In Coolers and Freezers, approved 2009, IBR approved for § 431.304.

(2) [Reserved]

(c) *ASTM*. American Society for Testing and Materials, 100 Barr Harbor Drive, West Conshohocken, PA 19428–2959, (610) 832–9500, or *http://www.astm.org*.

(1) ASTM C518–04 (''ASTM C518''), Standard Test Method for Steady-State Thermal Transmission Properties by Means of the Heat Flow Meter Apparatus, approved May 1, 2004, IBR approved for § 431.304 and appendix A to aubpart R of part 431.

(2) ASTM C1363–05, (''ASTM C1363''), Standard Test Method for Thermal Performance of Building Materials and Envelope Assemblies by Means of a Hot Box Apparatus, approved May 1, 2005, IBR approved for appendix A to subpart R of part 431.

(d) CEN. European Committee for Standardization (French: Norme or German: Norm), Avenue Marnix 17, B–1000 Brussels, Belgium, Tel: + 32 2 550 08 11, Fax: + 32 2 550 08 19 or *http://www.cen.eu/*.

(1) DIN EN 13164:2009–02, (''DIN EN 13164''), Thermal insulation products for buildings—Factory made products of extruded polystyrene foam (XPS)—Specification, approved February 2009, IBR approved for appendix A to subpart R of part 431.

(2) DIN EN 13165:2009–02, (''DIN EN 13165''), Thermal insulation products for buildings—Factory made rigid polyurethane foam (PUR) products—Specification, approved February 2009, IBR approved for appendix A to subpart R of part 431.

(e) *NFRC*. National Fenestration Rating Council, 6305 Ivy Lane, Ste. 140, Greenbelt, MD 20770, (301) 589–1776, or *http://www.nfrc.org/*.

(1) NFRC 100–2010[E0A1], (''NFRC 100''), Procedure for Determining Fenestration Product U-factors, approved June 2010, IBR approved for appendix A to subpart R of part 431.

(2) [Reserved]

[74 FR 12074, Mar. 23, 2009, as amended at 76 FR 21605, Apr. 15, 2011; 76 FR 33631, June 9, 2011]

§ 431.304 Uniform test method for the measurement of energy consumption of walk-in coolers and walk-in freezers.

(a) *Scope*. This section provides test procedures for measuring, pursuant to EPCA, the energy consumption of refrigerated bottled or canned beverage vending machines.

(b) *Testing and Calculations—EISA 2007 Test Procedure*. Manufacturers shall use this paragraph (b) for the purposes of certifying compliance with the applicable energy conservation standards of the R-value of panels until January 1, 2015.

(1) The R value shall be the 1/K factor multiplied by the thickness of the panel.

(2) The K factor shall be based on ASTM C518 (incorporated by reference, see § 431.303).

(3) For calculating the R value for freezers, the K factor of the foam at 20 degrees Fahrenheit (average foam temperature) shall be used.

(4) For calculating the R value for coolers, the K factor of the foam at 55 degrees Fahrenheit (average foam temperature) shall be used.

(5) Foam shall be tested after it is produced in its final chemical form. Foam produced inside of a panel (''foam-in-place'') must be tested in its final foamed state and must not include any structural members or non-foam materials other than the panel's protective skins or facers. A test sample less than or equal to 4 inches thick must be taken from the center of the foam-in-place panels. Foam produced as board stock may be tested prior to its incorporation into a final panel.

(6) Manufacturers are not required to consider non-foam member and/or edge regions in ASTM C518 testing.

(c) *Testing and Calculations—Amended Test Procedures*. Manufacturers shall use this paragraph (c) for any representations of energy efficiency/energy use

starting on October 12, 2011 and to certify compliance to the energy conservation standards of the R-value of panels on or after January 1, 2015.

(1) The R value shall be the 1/K factor multiplied by the thickness of the panel.

(2) The K factor shall be based on ASTM C518 (incorporated by reference; see § 431.303).

(3) For calculating the R value for freezers, the K factor of the foam at 20 degrees Fahrenheit (average foam temperature) shall be used.

(4) For calculating the R value for coolers, the K factor of the foam at 55 degrees Fahrenheit (average foam temperature) shall be used.

(5) For ASTM C518 testing, foam shall be tested after it is produced in its final chemical form. Foam produced inside of a panel (''foam-in-place'') must be tested in its final foamed state and must not include any structural members or non-foam materials other than the panel's protective skins or facers. A test sample less than or equal to 4 inches thick must be taken from the center of the foam-in-place panels. Foam produced as board stock may be tested prior to its incorporation into a final panel.

(6) Manufacturers are not required to consider non-foam member and/or edge regions in ASTM C518 testing.

(7) Determine the U-factor, conduction load, and energy use of walk-in cooler and walk-in freezer display panels, floor panels, and non-floor panels by conducting the test procedure set forth in appendix A to this subpart, sections 4.1, 4.2, and 4.3, respectively.

(8) Determine the energy use of walk-in cooler and walk-in freezer display doors and non-display doors by conducting the test procedure set forth in appendix A to this subpart, sections 4.4 and 4.5, respectively.

(9) Determine the Annual Walk-in Energy Factor of walk-in cooler and walk-in freezer refrigeration systems by conducting the test procedure set forth in AHRI 1250 (incorporated by reference; see § 431.303).

(10) Determine the annual energy consumption of walk-in cooler and walk-in freezer refrigeration systems:

(i) For systems consisting of a packaged dedicated system or a split dedicated system, where the condensing unit is located outdoors, by conducting the test procedure set forth in AHRI 1250 and recording the annual energy consumption term in the equation for annual walk-in energy factor in section 7 of AHRI 1250:

$$\text{Annual Energy Consumption} = \sum_{j=1}^{n} E(t_j)$$

where t_j and n represent the outdoor temperature at each bin j and the number of hours in each bin *j*, respectively, for the temperature bins listed in Table D1 of AHRI 1250.

(ii) For systems consisting of a packaged dedicated system or a split dedicated system where the condensing unit is located in a conditioned space, by performing the following calculation:

$$\text{Annual Energy Consumption} = \left(\frac{0.33 \times \dot{BLH} + 0.67 \times \dot{BLL}}{\text{Annual Walk-in Energy Factor}}\right) \times 8760$$

where $\dot{BLH}$ and $\dot{BLL}$ for refrigerator and freezer systems are defined in sections 6.2.1 and 6.2.2, respectively, of AHRI 1250 and the annual walk-in energy factor is calculated from the results of the test procedures set forth in AHRI 1250.

(iii) For systems consisting of a single unit cooler or a set of multiple unit coolers serving a single piece of equipment and connected to a multiplex condensing system, by performing the following calculation:

$$\text{Annual Energy Consumption} = \left(\frac{0.33 \times B\dot{L}H + 0.67 \times B\dot{L}L}{\text{Annual Walk-in Energy Factor}}\right) \times 8760$$

where $B\dot{L}H$ and $B\dot{L}L$ for refrigerator and freezer systems are defined in section 7.9.2.2 and 7.9.2.3, respectively, of AHRI 1250 and the annual walk-in energy factor is calculated from the results of the test procedures set forth in AHRI 1250.

[74 FR 12074, Mar. 23, 2009, as amended at 76 FR 21605, Apr. 15, 2011; 76 FR 33631, June 9, 2011; 76 FR 65365, Oct. 21, 2011]

§431.305 [Reserved]

ENERGY CONSERVATION STANDARDS

§431.306 Energy conservation standards and their effective dates.

(a) Each walk-in cooler or walk-in freezer manufactured on or after January 1, 2009, shall—

(1) Have automatic door closers that firmly close all walk-in doors that have been closed to within 1 inch of full closure, except that this paragraph shall not apply to doors wider than 3 feet 9 inches or taller than 7 feet;

(2) Have strip doors, spring hinged doors, or other method of minimizing infiltration when doors are open;

(3) Contain wall, ceiling, and door insulation of at least R–25 for coolers and R–32 for freezers, except that this paragraph shall not apply to—

(i) Glazed portions of doors or structural members, or

(ii) A wall, ceiling or door if the manufacturer of that component has provided to the Assistant Secretary for Energy Efficiency and Renewable Energy all data and technical information necessary to fully evaluate whether the component reduces energy consumption at least as much as if this paragraph were to apply, and has demonstrated to the satisfaction of the Assistant Secretary that the component achieves such a reduction in energy consumption;

(4) Contain floor insulation of at least R–28 for freezers;

(5) For evaporator fan motors of under 1 horsepower and less than 460 volts, use—

(i) Electronically commutated motors (brushless direct current motors); or

(ii) 3-phase motors;

(6) For condenser fan motors of under 1 horsepower, use—

(i) Electronically commutated motors (brushless direct current motors);

(ii) Permanent split capacitor-type motors; or

(iii) 3-phase motors; and

(7) For all interior lights, use light sources with an efficacy of 40 lumens per watt or more, including ballast losses (if any), except that light sources with an efficacy of 40 lumens per watt or less, including ballast losses (if any), may be used in conjunction with a timer or device that turns off the lights within 15 minutes of when the walk-in cooler or walk-in freezer is not occupied by people.

(b) Each walk-in cooler or walk-in freezer with transparent reach-in doors manufactured on or after January 1, 2009, shall also meet the following specifications:

(1) Transparent reach-in doors for walk-in freezers and windows in walk-in freezer doors shall be of triple-pane glass with either heat-reflective treated glass or gas fill.

(2) Transparent reach-in doors for walk-in coolers and windows in walk-in cooler doors shall be—

(i) Double-pane glass with heat-reflective treated glass and gas fill; or

(ii) Triple-pane glass with either heat-reflective treated glass or gas fill.

(3) If the walk-in cooler or walk-in freezer has an antisweat heater without antisweat heat controls, the walk-in cooler and walk-in freezer shall have a total door rail, glass, and frame heater power draw of not more than 7.1

watts per square foot of door opening (for freezers) and 3.0 watts per square foot of door opening (for coolers).

(4) If the walk-in cooler or walk-in freezer has an antisweat heater with antisweat heat controls, and the total door rail, glass, and frame heater power draw is more than 7.1 watts per square foot of door opening (for freezers) and 3.0 watts per square foot of door opening (for coolers), the antisweat heat controls shall reduce the energy use of the antisweat heater in a quantity corresponding to the relative humidity in the air outside the door or to the condensation on the inner glass pane.

[74 FR 12074, Mar. 23, 2009, as amended at 78 FR 62993, Oct. 23, 2013]

APPENDIX A TO SUBPART R OF PART 431—UNIFORM TEST METHOD FOR THE MEASUREMENT OF ENERGY CONSUMPTION OF THE COMPONENTS OF ENVELOPES OF WALK-IN COOLERS AND WALK-IN FREEZERS

1.0 Scope

This appendix covers the test requirements used to measure the energy consumption of the components that make up the envelope of a walk-in cooler or walk-in freezer.

2.0 Definitions

The definitions contained in §431.302 are applicable to this appendix.

3.0 Additional Definitions

3.1 Automatic door opener/closer means a device or control system that ''automatically'' opens and closes doors without direct user contact, such as a motion sensor that senses when a forklift is approaching the entrance to a door and opens it, and then closes the door after the forklift has passed.

3.2 Core region means the part of the panel that is not the edge region.

3.3 Edge region means a region of the panel that is wide enough to encompass any framing members and edge effects. If the panel contains framing members (e.g. a wood frame) then the width of the edge region must be as wide as any framing member plus 2 in. ±0.25 in. If the panel does not contain framing members then the width of the edge region must be 4 in ±0.25 in. For walk-in panels that utilize vacuum insulated panels (VIP) for insulation, the width of the edge region must be the lesser of 4.5 in. ±1 in. or the maximum width that does not cause the VIP to be pierced by the cutting device when the edge region is cut.

3.4 Surface area means the area of the surface of the walk-in component that would be external to the walk-in. For example, for panel, the surface area would be the area of the side of the panel that faces the outside of the walk-in. It would not include edges of the panel that are not exposed to the outside of the walk-in.

3.5 Rating conditions means, unless explicitly stated otherwise, all conditions shown in Table A.1. For installations where two or more walk-in envelope components share any surface(s), the ''external conditions'' of the shared surface(s) must reflect the internal conditions of the adjacent walk-in. For example, if a walk-in component divides a walk-in freezer from a walk-in cooler, then the internal conditions are the freezer rating conditions and the external conditions are the cooler rating conditions.

3.6 Percent time off (PTO) means the percent of time that an electrical device is assumed to be off.

TABLE A.1—TEMPERATURE CONDITIONS

Internal Temperatures (cooled space within the envelope)	
Cooler Dry Bulb Temperature	35 °F.
Freezer Dry Bulb Temperature	−10 °F.
External Temperatures (space external to the envelope)	
Freezer and Cooler Dry Bulb Temperatures	75 °F.
Subfloor Temperatures	
Freezer and Cooler Dry Bulb Temperatures	55 °F.

4.0 Calculation Instructions

4.1 Display Panels

(a) Calculate the U-factor of the display panel in accordance with section 5.3 of this appendix, Btu/h-ft^2- °F.

(b) Calculate the display panel surface area, as defined in section 3.4 of this appendix, A_{dp}, ft^2, with standard geometric formulas or engineering software.

(c) Calculate the temperature differential, ΔT_{dp}, °F, for the display panel, as follows:

$$\Delta T_{dp} = \left| T_{DB,ext,dp} - T_{DB,int,dp} \right| \qquad (4\text{-}1)$$

Where:

$T_{DB,ext,dp}$ = dry-bulb air external temperature, °F, as prescribed in Table A.1; and

$T_{DB,int,dp}$ = dry-bulb air temperature internal to the cooler or freezer, °F, as prescribed in Table A.1.

(d) Calculate the conduction load through the display panel, $Q_{cond\text{-}dp}$, Btu/h, as follows:

$$Q_{cond,dp} = A_{dp} \times \Delta T_{dp} \times U_{dp} \qquad (4\text{-}2)$$

Where:

A_{dp} = surface area of the walk-in display panel, ft^2;

ΔT_{dp} = temperature differential between refrigerated and adjacent zones, °F; and

U_{dp} = thermal transmittance, U-factor, of the display panel in accordance with section 5.3 of this appendix, Btu/h-ft^2- °F.

(e) Select Energy Efficiency Ratio (EER), as follows:

(1) For coolers, use EER = 12.4 Btu/W-h

(2) For freezers, use EER = 6.3 Btu/W-h

(f) Calculate the total daily energy consumption, E_{dp}, kWh/day, as follows:

$$E_{dp} = \frac{Q_{cond,dp}}{EER} \times \frac{24\ h \times 1\ kW}{1\ day \times 1000\ W} \qquad (4\text{-}3)$$

Where:

$Q_{cond,\ dp}$ = the conduction load through the display panel, Btu/h; and EER = EER of walk-in (cooler or freezer), Btu/W-h.

4.2 Floor Panels

(a) Calculate the surface area, as defined in section 3.4 of this appendix, of the floor panel edge, as defined in section 3.3, $A_{fp\ edge}$, ft^2, with standard geometric formulas or engineering software as directed in section 5.1 of this appendix.

(b) Calculate the surface area, as defined in section 3.4 of this appendix, of the floor panel core, as defined in section 3.2, $A_{fp\ core}$, ft^2, with standard geometric formulas or engineering software as directed in section 5.1 of this appendix.

(c) Calculate the total area of the floor panel, $A_{fp,}$ ft^2, as follows:

$$A_{fp} = A_{fp\ core} + A_{fp\ edge} \qquad (4\text{-}4)$$

Where:

$A_{fp\ core}$ = floor panel core area, ft^2; and

$A_{fp\ edge}$ = floor panel edge area, ft^2.

(d) Calculate the temperature differential of the floor panel, ΔT_{fp}, °F, as follows:

$$\Delta T_{fp} = \left| T_{ext,fp} - T_{DB,int,fp} \right| \qquad (4\text{-}5)$$

Where:

$T_{ext,\ fp}$ = subfloor temperature, °F, as prescribed in Table A.1; and

$T_{DB,int,\ fp}$ = dry-bulb air internal temperature, °F, as prescribed in Table A.1. If the panel spans both cooler and freezer temperatures, the freezer temperature must be used.

(e) Calculate the floor foam degradation factor, DF_{fp}, unitless, as follows:

$$DF_{fp} = \frac{R_{LTTR,fp}}{R_{O,fp}} \qquad (4\text{-}6)$$

Where:

$R_{LTTR,fp}$ = the long term thermal resistance R-value of the floor panel foam in accordance with section 5.2 of this appendix, h-ft^2- °F/Btu; and

$R_{o,fp}$ = the R-value of foam determined in accordance with ASTM C518 (incorporated by reference; see section §431.303) for purposes of compliance with the appropriate energy conservation standard, h-ft^2- °F/Btu.

(f) Calculate the U-factor for panel core region modified by the long term thermal transmittance of foam, $U_{LT,fp\ core}$, Btu/h-ft^2- °F, as follows:

$$U_{LT,fp\ core} = \frac{U_{fp\ core}}{DF_{fp}} \qquad (4\text{-}7)$$

Where:

$U_{fp\ core}$ = the U-factor in accordance with section 5.1 of this appendix, Btu/h-ft^2- °F; and

DF_{fp} = floor foam degradation factor, unitless.

(g) Calculate the overall U-factor of the floor panel, U_{fp}, Btu/h-ft^2- °F, as follows:

$$U_{fp} = \frac{A_{fp\ edge} \times U_{fp\ edge} + A_{fp\ core} \times U_{LT,fp\ core}}{A_{fp}} \qquad (4\text{-}8)$$

Where:

$A_{fp\ edge}$ = area of floor panel edge, ft^2;

$U_{fp\ edge}$ = U-factor for panel edge area in accordance with section 5.1 of this appendix, Btu/h-ft^2- °F;

$A_{fp\ core}$ = area of floor panel core, ft^2;

$U_{LT,fp\ core}$ = U-factor for panel core region modified by the long term thermal transmittance of foam, Btu/h-ft^2- °F; and

A_{fp} = total area of the floor panel, ft^2.

(h) Calculate the conduction load through floor panels, $Q_{cond\text{-}fp}$, Btu/h,

$$Q_{cond-fp} = \Delta T_{fp} \times A_{fp} \times U_{fp} \qquad (4\text{-}9)$$

Where:

ΔT_{fp} = temperature differential across the floor panels, °F;

A_{fp} = total area of the floor panel, ft^2; and

U_{fp} = overall U-factor of the floor panel, Btu/h-ft^2- °F.

(i) Select Energy Efficiency Ratio (EER), as follows:

(1) For coolers, use EER = 12.4 Btu/W-h

(2) For freezers, use EER = 6.3 Btu/W-h

(j) Calculate the total daily energy consumption, E_{fp}, kWh/day, as follows:

$$E_{fp} = \frac{Q_{cond-fp}}{EER} \times \frac{24\ h \times 1\ kW}{1\ day \times 1000\ W} \qquad (4\text{-}10)$$

Where:

$Q_{cond\text{-}fp}$ = the conduction load through the floor panel, Btu/h; and EER = EER of walk-in (cooler or freezer), Btu/W-h.

4.3 Non-Floor Panels

(a) Calculate the surface area, as defined in section 3.4, of the non-floor panel edge, as defined in section 3.3, $A_{nf\ edge}$, ft^2, with standard geometric formulas or engineering software as directed in section 5.1 of this appendix.

(b) Calculate the surface area, as defined in section 3.4, of the non-floor panel core, as defined in section 3.2, $A_{nf\ core}$, ft^2, with standard geometric formulas or engineering software as directed in section 5.1 of this appendix.

(c) Calculate total non-floor panel area, A_{nf}, ft^2:

$$A_{nf} = A_{nf\ edge} + A_{nf\ core} \qquad (4\text{-}11)$$

Where:

$A_{nf\ edge}$ = non-floor panel edge area, ft^2; and

$A_{nf\ core}$ = non-floor panel core area, ft^2.

(d) Calculate temperature differential, ΔT_{nf}, °F:

$$\Delta T_{nf} = |T_{DB,ext,nf} - T_{DB,int,nf}| \qquad (4\text{-}12)$$

Where:

$T_{DB,ext,\ nf}$ = dry-bulb air external temperature, °F, as prescribed in Table A.1; and

$T_{DB,int,\ nf}$ = dry-bulb air internal temperature, °F, as prescribed in Table A.1. If the non-floor panel spans both cooler and freezer temperatures, then the freezer temperature must be used.

(e) Calculate the non-floor foam degradation factor, DF_{nf}, unitless, as follows:

$$DF_{nf} = \frac{R_{LTTR,nf}}{R_{o,nf}} \qquad (4\text{-}13)$$

Where:

$R_{LTTR,nf}$ = the R-value of the non-floor panel foam in accordance with section 5.2 of this appendix, h- ft^2- °F/Btu; and

$R_{o,nf}$ = the R-value of foam determined in accordance with ASTM C518 (incorporated by reference; see section § 431.303) for purposes of compliance with the appropriate energy conservation standard, h-ft^2- °F/Btu.

(f) Calculate the U-factor, $U_{LT,nf\ core}$, Btu/h-ft^2- °F, as follows:

$$U_{LT,nf\ core} = \frac{U_{nf\ core}}{DF_{nf}} \qquad (4\text{-}14)$$

Where:

$U_{nf\ core}$ = the U-factor, in accordance with section 5.1 of this appendix, of non-floor panel, Btu/h- ft^2- °F; and

DF_{nf} = the non-floor foam degradation factor, unitless.

(g) Calculate the overall U-factor of the non-floor panel, U_{nf}, Btu/h-ft^2- °F, as follows:

$$U_{nf} = \frac{A_{nf\ edge} \times U_{nf\ edge} + A_{nf\ core} \times U_{LT,nf\ core}}{A_{nf}} \qquad (4\text{-}15)$$

Where:

$A_{nf\ edge}$ = area of non-floor panel edge, ft^2;

$U_{nf\ edge}$ = U-factor for non-floor panel edge area in accordance with section 5.1 of this appendix, Btu/h-ft²- °F;

$A_{nf\ core}$ = area of non-floor panel core, ft²;

$U_{LT,nf\ core}$ = U-factor for non-floor panel core region modified by the long term thermal transmittance of foam, Btu/h-ft²- °F; and

A_{nf} = total area of the non- floor panel, ft².

(h) Calculate the conduction load through non-floor panels, $Q_{cond\text{-}nf}$, Btu/h,

$$Q_{cond-nf} = \Delta T_{nf} \times A_{nf} \times U_{nf} \qquad (4\text{-}16)$$

Where:

ΔT_{nf} = temperature differential across the non-floor panels, °F;

A_{nf} = total area of the non-floor panel, ft²; and

U_{nf} = overall U-factor of the non-floor panel, Btu/h-ft²- °F.

(i) Select Energy Efficiency Ratio (EER), as follows:

(1) For coolers, use EER = 12.4 Btu/W-h

(2) For freezers, use EER = 6.3 Btu/W-h

(j) Calculate the total daily energy consumption, E_{nf}, kWh/day, as follows:

$$E_{nf} = \frac{Q_{cond-nf}}{EER} \times \frac{24\ h \times 1\ kW}{1\ day \times 1000\ W} \qquad (4\text{-}17)$$

Where:

$Q_{cond\text{-}nf}$ = the conduction load through the non-floor panel, Btu/h; and

EER = EER of walk-in (cooler or freezer), Btu/W-h.

4.4 Display Doors

4.4.1 Conduction Through Display Doors

(a) Calculate the U-factor of the door in accordance with section 5.3 of this appendix, Btu/h-ft²- °F

(b) Calculate the surface area, as defined in section 3.4 of this appendix, of the display door, A_{dd}, ft², with standard geometric formulas or engineering software.

(c) Calculate the temperature differential, ΔT_{dd}, °F, for the display door as follows:

$$\Delta T_{dd} = \left| T_{DB,ext,dd} - T_{DB,int,dd} \right| \qquad (4\text{-}18)$$

Where:

$T_{DB,ext,\ dd}$ = dry-bulb air temperature external to the display door, °F, as prescribed in Table A.1; and

$T_{DB,int,\ dd}$ = dry-bulb air temperature internal to the display door, °F, as prescribed in Table A.1.

(d) Calculate the conduction load through the display doors, $Q_{cond\text{-}dd}$, Btu/h, as follows:

$$Q_{cond,dd} = A_{dd} \times \Delta T_{dd} \times U_{dd} \qquad (4\text{-}19)$$

Where:

ΔT_{dd} = temperature differential between refrigerated and adjacent zones, °F;

A_{dd} = surface area walk-in display doors, ft²; and

U_{dd} = thermal transmittance, U-factor of the door, in accordance with section 5.3 of this appendix, Btu/h-ft²- °F.

4.4.2 Direct Energy Consumption of Electrical Component(s) of Display Doors

Electrical components associated with display doors could include, but are not limited to: heater wire (for anti-sweat or anti-freeze application); lights (including display door lighting systems); control system units; and sensors.

(a) Select the required value for percent time off (PTO) for each type of electricity consuming device, PTO_t (%)

(1) For lights without timers, control system or other demand-based control, PTO = 25 percent. For lighting with timers, control system or other demand-based control, PTO = 50 percent.

(2) For anti-sweat heaters on coolers (if included): Without timers, control system or other demand-based control, PTO = 0 percent. With timers, control system or other demand-based control, PTO = 75 percent. For anti-sweat heaters on freezers (if included): Without timers, control system or other auto-shut-off systems, PTO = 0 percent. With timers, control system or other demand-based control, PTO = 50 percent.

(3) For all other electricity consuming devices: Without timers, control system, or other auto-shut-off systems, PTO = 0 percent. If it can be demonstrated that the device is controlled by a preinstalled timer, control system or other auto-shut-off system, PTO = 25 percent.

(b) Calculate the power usage for each type of electricity consuming device, $P_{dd\text{-}comp,u,t}$, kWh/day, as follows:

$$P_{dd-comp,u,t} = P_{rated,u,t} \times \left(1 - PTO_{u,t}\right) \times n_{u,t} \times \frac{24h}{day} \qquad (4\text{-}20)$$

Where:

u = the index for each of type of electricity-consuming device located on either (1) the interior facing side of the display door or within the inside portion of the display door, (2) the exterior facing side of the display door, or (3) any combination of (1) and (2). For purposes of this calculation, the interior index is represented by u = int and the exterior index is represented by u = ext. If the electrical component is both on the interior and exterior side of the display door then u = int. For anti-sweat heaters sited anywhere in the display door, 75 percent of the total power is be attributed to u = int and 25 percent of the total power is attributed to u = ext;

t = index for each type of electricity consuming device with identical rated power;

$P_{rated,u,t}$ = rated power of each component, of type t, kW;

$PTO_{u,t}$ = percent time off, for device of type t, %; and

$n_{u,t}$ = number of devices at the rated power of type t, unitless.

(c) Calculate the total electrical energy consumption for interior and exterior power, $P_{dd\text{-}tot,\ int}$ (kWh/day) and $P_{dd\text{-}tot,\ ext}$ (kWh/day), respectively, as follows:

$$P_{dd-tot,int} = \sum_1^t P_{dd-comp,int,t} \qquad (4\text{-}21)$$

$$P_{dd-tot,ext} = \sum_1^t P_{dd-comp,ext,t} \qquad (4\text{-}22)$$

Where:

t = index for each type of electricity consuming device with identical rated power;

$P_{dd\text{-}comp,int,\ t}$ = the energy usage for an electricity consuming device sited on the interior facing side of or in the display door, of type t, kWh/day; and

$P_{dd\text{-}comp,ext,\ t}$ = the energy usage for an electricity consuming device sited on the external facing side of the display door, of type t, kWh/day.

(d) Calculate the total electrical energy consumption, $P_{dd\text{-}tot}$, (kWh/day), as follows:

$$P_{dd-tot} = P_{dd-tot,int} + P_{dd-tot,ext} \quad (4\text{-}23)$$

Where:

$P_{dd\text{-}tot,int}$ = the total interior electrical energy usage for the display door, kWh/day; and

$P_{dd\text{-}tot,ext}$ = the total exterior electrical energy usage for the display door, kWh/day.

4.4.3 Total Indirect Electricity Consumption Due to Electrical Devices

(a) Select Energy Efficiency Ratio (EER), as follows:

(1) For coolers, use EER = 12.4 Btu/Wh

(2) For freezers, use EER = 6.3 Btu/Wh

(b) Calculate the additional refrigeration energy consumption due to thermal output from electrical components sited inside the display door, $C_{dd\text{-}load}$, kWh/day, as follows:

$$C_{dd-load} = P_{dd-tot,int} \times \frac{3.412}{EER}\frac{Btu}{W-h} \quad (4\text{-}24)$$

Where:

EER = EER of walk-in cooler or walk-in freezer, Btu/W-h; and

$P_{dd\text{-}tot,int}$ = The total internal electrical energy consumption due for the display door, kWh/day.

4.4.4 Total Display Door Energy Consumption

(a) Select Energy Efficiency Ratio (EER), as follows:

(1) For coolers, use EER = 12.4 Btu/W-h

(2) For freezers, use EER = 6.3 Btu/W-h

(b) Calculate the total daily energy consumption due to conduction thermal load, $E_{dd,\ thermal}$, kWh/day, as follows:

$$E_{dd,thermal} = \frac{Q_{cond,dd}}{EER} \times \frac{24\ h \times 1\ kW}{1\ day \times 1000\ W} \quad (4\text{-}25)$$

Where:

$Q_{cond,\ dd}$ = the conduction load through the display door, Btu/h; and

EER = EER of walk-in (cooler or freezer), Btu/W-h.

(c) Calculate the total energy, $E_{dd,tot}$, kWh/day,

$$E_{dd,tot} = E_{dd,thermal} + P_{dd-tot} + C_{dd-load} \quad (4\text{-}26)$$

Where:

$E_{dd,\ thermal}$ = the total daily energy consumption due to thermal load for the display door, kWh/day;

$P_{dd\text{-}tot}$ = the total electrical load, kWh/day; and

$C_{dd\text{-}load}$ = additional refrigeration load due to thermal output from electrical components contained within the display door, kWh/day.

4.5 Non-Display Doors

4.5.1 Conduction Through Non-Display Doors

(a) Calculate the surface area, as defined in section 3.4 of this appendix, of the non-display door, A_{nd}, ft^2, with standard geometric formulas or with engineering software.

(b) Calculate the temperature differential of the non-display door, ΔT_{nd}, °F, as follows:

$$\Delta T_{nd} = \left| T_{DB,ext,nd} - T_{DB,int,nd} \right| \qquad (4\text{-}27)$$

Where:

$T_{DB,ext,\ nd}$ = dry-bulb air external temperature, °F, as prescribed by Table A.1; and

$T_{DB,int,\ nd}$ = dry-bulb air internal temperature, °F, as prescribed by Table A.1. If the component spans both cooler and freezer spaces, the freezer temperature must be used.

(c) Calculate the conduction load through the non-display door: $Q_{cond\text{-}nd}$, Btu/h,

$$Q_{cond-nd} = \Delta T_{nd} \times A_{nd} \times U_{nd} \qquad (4\text{-}28)$$

Where:

ΔT_{nd} = temperature differential across the non-display door, °F;

U_{nd} = thermal transmittance, U-factor of the door, in accordance with section 5.3 of this appendix, Btu/h-ft^2- °F; and

A_{nd} = area of non-display door, ft^2.

4.5.2 Direct Energy Consumption of Electrical Components of Non-Display Doors

Electrical components associated with a walk-in non-display door comprise any components that are on the non-display door and that directly consume electrical energy. This includes, but is not limited to, heater wire (for anti-sweat or anti-freeze application), control system units, and sensors.

(a) Select the required value for percent time off for each type of electricity consuming device, PTO_t (%)

(1) For lighting without timers, control system or other demand-based control, PTO = 25 percent. For lighting with timers, control system or other demand-based control, PTO = 50 percent.

(2) For anti-sweat heaters on coolers (if included): Without timers, control system or other demand-based control, PTO = 0 percent. With timers, control system or other demand-based control, PTO = 75 percent. For anti-sweat heaters on freezers (if included): Without timers, control system or other auto-shut-off systems, PTO = 0 percent. With timers, control system or other demand-based control, PTO = 50 percent.

(3) For all other electricity consuming devices: Without timers, control system, or other auto-shut-off systems, PTO = 0 percent. If it can be demonstrated that the device is controlled by a preinstalled timer, control system or other auto-shut-off system, PTO = 25 percent.

(b) Calculate the power usage for each type of electricity consuming device, $P_{nd\text{-}comp,u,t}$, kWh/day, as follows:

$$P_{nd-comp,u,t} = P_{rated,u,t} \times \left(1 - PTO_{u,t}\right) \times n_{u,t} \times \frac{24h}{day} \qquad (4\text{-}29)$$

Where:

u = the index for each of type of electricity-consuming device located on either (1) the interior facing side of the display door or within the inside portion of the display door, (2) the exterior facing side of the display door, or (3) any combination of (1) and (2). For purposes of this calculation, the interior index is represented by u = int and the exterior index is represented by u = ext. If the electrical component is both on the interior and exterior side of the display door then u = int. For anti-sweat heaters sited anywhere in the display door, 75 percent of the total power is be attributed to u=int and 25 percent of the total power is attributed to u=ext;

t = index for each type of electricity consuming device with identical rated power;

$P_{rated,u,t}$ = rated power of each component, of type t, kW;

$PTO_{u,t}$ = percent time off, for device of type t, %; and

$n_{u,t}$ = number of devices at the rated power of type t, unitless.

(c) Calculate the total electrical energy consumption for interior and exterior power, $P_{nd\text{-}tot,\ int}$ (kWh/day) and $P_{nd\text{-}tot,\ ext}$ (kWh/day), respectively, as follows:

$$P_{nd-tot,int} = \sum_1^t P_{nd-comp,int,t} \qquad (4\text{-}30)$$

$$P_{nd-tot,ext} = \sum_1^t P_{nd-comp,ext,t} \qquad (4\text{-}31)$$

Where:

t = index for each type of electricity consuming device with identical rated power;

$P_{nd-comp,int,\ t}$ = the energy usage for an electricity consuming device sited on the internal facing side or internal to the non-display door, of type t, kWh/day; and

$P_{nd-comp,ext,\ t}$ = the energy usage for an electricity consuming device sited on the external facing side of the non-display door, of type t, kWh/day. For anti-sweat heaters,

(d) Calculate the total electrical energy consumption, P_{nd-tot}, kWh/day, as follows:

$$P_{nd-tot} = P_{nd-tot,int} + P_{nd-tot,ext} \qquad (4\text{-}32)$$

Where:

$P_{nd-tot,int}$ = the total interior electrical energy usage for the non-display door, of type t, kWh/day; and

$P_{nd-tot,ext}$ = the total exterior electrical energy usage for the non-display door, of type t, kWh/day.

4.5.3 Total Indirect Electricity Consumption Due to Electrical Devices

(a) Select Energy Efficiency Ratio (EER), as follows:

(1) For coolers, use EER = 12.4 Btu/Wh

(2) For freezers, use EER = 6.3 Btu/Wh

(b) Calculate the additional refrigeration energy consumption due to thermal output from electrical components associated with the non-display door, $C_{nd-load}$, kWh/day, as follows:

$$C_{nd-load} = P_{nd-tot,int} \times \frac{3.412}{EER}\frac{Btu}{W-h} \qquad (4\text{-}33)$$

Where:

EER = EER of walk-in cooler or freezer, Btu/W-h; and

$P_{nd-tot,int}$ = the total interior electrical energy consumption for the non-display door, kWh/day.

4.5.4 Total Non-Display Door Energy Consumption

(a) Select Energy Efficiency Ratio (EER), as follows:

(1) For coolers, use EER = 12.4 Btu/W-h

(2) For freezers, use EER = 6.3 Btu/W-h

(b) Calculate the total daily energy consumption due to thermal load, $E_{nd,\ thermal}$, kWh/day, as follows:

$$E_{nd,thermal} = \frac{Q_{cond-nd}}{EER} \times \frac{24\ h \times 1\ kW}{1\ day \times 1000\ W} \qquad (4\text{-}34)$$

Where:

$Q_{cond-nd}$ = the conduction load through the non-display door, Btu/hr; and

EER = EER of walk-in (cooler or freezer), Btu/W-h.

(c) Calculate the total energy, $E_{nd,tot}$, kWh/day, as follows:

$$E_{nd,tot} = E_{nd,thermal} + P_{nd-tot} + C_{load} \quad (4\text{-}35)$$

Where:

$E_{nd,\ thermal}$ = the total daily energy consumption due to thermal load for the non-display door, kWh/day;

$P_{nd\text{-}tot}$ = the total electrical energy consumption, kWh/day; and

$C_{nd\text{-}load}$ = additional refrigeration load due to thermal output from electrical components contained on the inside face of the non-display door, kWh/day.

5.0 Test Methods and Measurements

5.1 Measuring Floor and Non-floor Panel U-factors

Follow the test procedure in ASTM C1363, (incorporated by reference; see §431.303), exactly, with these exceptions:

(1) Test Sample Geometry Requirements

(i) Two (2) panels, 8 ft. ±1 ft. long and 4 ft. ±1 ft. wide must be used.

(ii) The panel edges must be joined using the manufacturer's panel interface joining system (e.g., camlocks, standard gasketing, etc.).

(iii) The Panel Edge Test Region, see figure 1, must be cut using the following dimensions:

1. If the panel contains framing members (e.g. a wood frame), then the width of edge (W) must be as wide as any framing member plus 2 in. ±0.25 in. For example, if the face of the panel contains 1.5 in. thick framing members around the edge of the panel, then width of edge (W) = 3.5 in. ±0.25 in and the Panel Edge Test Region would be 7 in. ±0.5 in. wide.

2. If the panel does not contain framing members, then the width of edge (W) must be 4 in ±0. 25 in.

3. Walk-in panels that utilize vacuum insulated panels (VIP) for insulation, width of edge (W) = the lesser of 4.5 in. ±1 in. or the maximum width that does not cause the VIP to be pierced by the cutting device when the edge region is cut.

(iv) Panel Core Test Region of length Y and height Z, see Figure 1, must also be cut from one of the two panels such that panel length = Y + X, panel height = Z +X where X=2W.

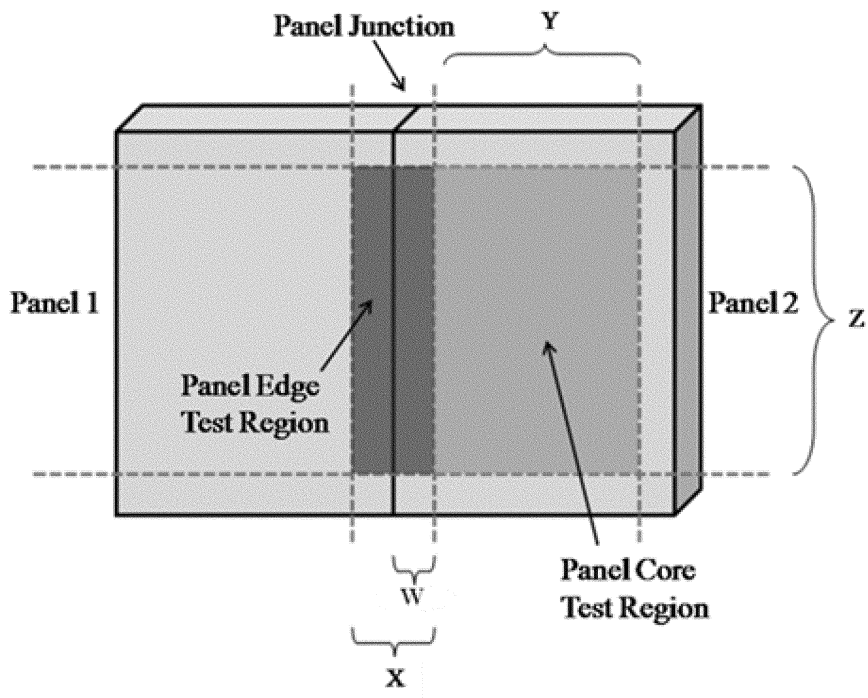

Figure 1 ASTM C1363 Test Regions (Note: diagram not drawn to scale)

(2) Testing Conditions

(i) The air temperature on the ''hot side'', as denoted in ASTM C1363, of the non-floor panel should be maintained at 75 °F ±1 °F.

1. Exception: When testing floor panels, the air temperature should be maintained at 55 °F ±1 °F.

(ii) The temperature on the ''cold side'', as denoted in ASTM C1363, of the panel should be maintained at 35 °F ±1 °F for the panels used for walk-in coolers and −10 °F ±1 °F for panels used for walk-in freezers.

(iii) The air velocity must be maintained as natural convection conditions as described in ASTM C1363. The test must be completed using the masked method and with surround panel in place as described in ASTM C1363.

(3) Required Test Measurements

(i) Non-floor Panels

1. Panel Edge Region U-factor: $U_{nf,\ edge}$
2. Panel Core Region U-factor: $U_{nf,\ core}$

(ii) Floor Panels

1. Floor Panel Edge Region U-factor: $U_{fp,\ edge}$
2. Floor Panel Core Region U-factor: $U_{fp,\ core}$

5.2 Measuring Long Term Thermal Resistance (LTTR) of Insulating Foam

Follow the test procedure in Annex C of DIN EN 13164 or Annex C of DIN EN 13165 (as applicable), (incorporated by reference; see § 431.303), exactly, with these exceptions:

(1) Temperatures During Thermal Resistance Measurement

(i) For freezers: 20 °F ±1 °F must be used.

(ii) For coolers: 55 °F ±1 °F must be used.

(2) Sample Panel Preparation

(i) A 800mm × 800mm square (× thickness of the panel) section cut from the geometric center of the panel that is being tested must be used as the sample for completing DIN EN 13165.

(ii) A 500mm × 500mm square (× thickness of the panel) section cut from the geometric center of the panel that is being tested must be used as the sample for completing DIN EN 13164.

(3) Required Test Measurements

(i) Non-floor Panels

1. Long Term Thermal Resistance: $R_{LTTR,nf}$

(ii) Floor Panels

1. Long Term Thermal Resistance: $R_{LTTR,fp}$

5.3 U-factor of Doors and Display Panels

(a) Follow the procedure in NFRC 100, (incorporated by reference; see § 431.303), exactly, with these exceptions:

(1) The average convective heat transfer coefficient on both interior and exterior surfaces of the door should be based on the coefficients described in section 4.3 of NFRC 100.

(2) Internal conditions:

(i) Air temperature of 35 °F (1.7 °C) for cooler doors and −10 °F (−23.3 °C) for freezer doors

(ii) Mean inside radiant temperature must be the same as shown in section 5.3(a)(2)(i), above.

(3) External conditions

(i) Air temperature of 75 °F (23.9 °C)

(ii) Mean outside radiant temperature must be the same as section 5.3(a)(3)(i), above.

(4) Direct solar irradiance = 0 W/m^2 (Btu/h-ft^2).

(b) Required Test Measurements

(i) Display Doors and Display Panels

1. Thermal Transmittance: U_{dd}

(ii) Non-Display Door

1. Thermal Transmittance: U_{nd}

[76 FR 21606, Apr. 15, 2011, as amended at 76 FR 31796, June 2, 2011; 76 FR 33632, June 9, 2011]

Subpart S—Metal Halide Lamp Ballasts and Fixtures

SOURCE: 74 FR 12075, Mar. 23, 2009, unless otherwise noted.

§ 431.321 Purpose and scope.

This subpart contains energy conservation requirements for metal halide lamp ballasts and fixtures, pursuant to Part A of Title III of the Energy Policy and Conservation Act, as amended, 42 U.S.C. 6291–6309.

[75 FR 10966, Mar. 9, 2010]

§ 431.322 Definitions concerning metal halide lamp ballasts and fixtures.

AC control signal means an alternating current (AC) signal that is supplied to the ballast using additional wiring for the purpose of controlling the ballast and putting the ballast in standby mode.

Active mode means the condition in which an energy-using product:

(1) Is connected to a main power source;

(2) Has been activated; and

(3) Provides one or more main functions.

Ballast means a device used with an electric discharge lamp to obtain necessary circuit conditions (voltage, current, and waveform) for starting and operating.

Ballast efficiency means, in the case of a high intensity discharge fixture, the efficiency of a lamp and ballast combination, expressed as a percentage, and calculated in accordance with the following formula: Efficiency = P_{out}/P_{in} where:

(1) P_{out} equals the measured operating lamp wattage;

(2) P_{in} equals the measured operating input wattage;

(3) The lamp, and the capacitor when the capacitor is provided, shall constitute a nominal system in accordance with the ANSI C78.43, (incorporated by reference; see § 431.323);

(4) For ballasts with a frequency of 60 Hz, P_{in} and P_{out} shall be measured after lamps have been stabilized according to section 4.4 of ANSI C82.6 (incorporated by reference; see § 431.323) using a wattmeter with accuracy specified in section 4.5 of ANSI C82.6; and

(5) For ballasts with a frequency greater than 60 Hz, P_{in} and P_{out} shall have a basic accuracy of ±0.5 percent at the higher of either 3 times the output operating frequency of the ballast or 2.4 kHz.

Basic model means all units of a given type of covered product (or class thereof) manufactured by one manufacturer, having the same primary energy source, and which have essentially identical electrical, physical, and functional (or hydraulic) characteristics that affect energy consumption, energy efficiency, water consumption, or water efficiency, and are rated to operate a given lamp type and wattage.

DC control signal means a direct current (DC) signal that is supplied to the ballast using additional wiring for the purpose of controlling the ballast and putting the ballast in standby mode.

Electronic ballast means a device that uses semiconductors as the primary

means to control lamp starting and operation.

Metal halide ballast means a ballast used to start and operate metal halide lamps.

Metal halide lamp means a high intensity discharge lamp in which the major portion of the light is produced by radiation of metal halides and their products of dissociation, possibly in combination with metallic vapors.

Metal halide lamp fixture means a light fixture for general lighting application designed to be operated with a metal halide lamp and a ballast for a metal halide lamp.

Off mode means the condition in which an energy-using product:

(1) Is connected to a main power source; and

(2) Is not providing any standby or active mode function.

PLC control signal means a power line carrier (PLC) signal that is supplied to the ballast using the input ballast wiring for the purpose of controlling the ballast and putting the ballast in standby mode.

Probe-start metal halide ballast means a ballast that starts a probe-start metal halide lamp that contains a third starting electrode (probe) in the arc tube, and does not generally contain an igniter but instead starts lamps with high ballast open circuit voltage.

Pulse-start metal halide ballast means an electronic or electromagnetic ballast that starts a pulse-start metal halide lamp with high voltage pulses, where lamps shall be started by the ballast first providing a high voltage pulse for ionization of the gas to produce a glow discharge and then power to sustain the discharge through the glow-to-arc transition.

Standby mode means the condition in which an energy-using product:

(1) Is connected to a main power source; and

(2) Offers one or more of the following user-oriented or protective functions:

(i) To facilitate the activation or deactivation of other functions (including active mode) by remote switch (including remote control), internal sensor, or timer;

(ii) Continuous functions, including information or status displays (including clocks) or sensor-based functions.

Wireless control signal means a wireless signal that is radiated to and received by the ballast for the purpose of controlling the ballast and putting the ballast in standby mode.

[74 FR 12075, Mar. 23, 2009, as amended at 75 FR 10966, Mar. 9, 2010; 74 FR 12074, Mar. 23, 2009]

TEST PROCEDURES

§ 431.323 Materials incorporated by reference.

(a) *General.* We incorporate by reference the following standards into subpart S of part 431. The material listed has been approved for incorporation by reference by the Director of the Federal Register in accordance with 5 U.S.C. 552(a) and 1 CFR part 51. Any subsequent amendment to a standard by the standard-setting organization will not affect the DOE regulations unless and until amended by DOE. Material is incorporated as it exists on the date of the approval and a notice of any change in the material will be published in the FEDERAL REGISTER. All approved material is available for inspection at the National Archives and Records Administration (NARA). For information on the availability of this material at NARA, call 202–741–6030 or go to *http://www.archives.gov/federal_register/code_of_federal_regulations/ibr_locations.html.* Also, this material is available for inspection at U.S. Department of Energy, Office of Energy Efficiency and Renewable Energy, Building Technologies Program, 6th Floor, 950 L'Enfant Plaza, SW., Washington, DC 20024, 202–586–2945, between 9 a.m. and 4 p.m., Monday through Friday, except Federal holidays, or go to: *http://www1.eere.energy.gov/buildings/appliance_standards/.* Standards can be obtained from the sources listed below.

(b) *ANSI.* American National Standards Institute, 25 W. 43rd Street, 4th Floor, New York, NY 10036, 212–642–4900, or go to *http://www.ansi.org.*

(1) ANSI C78.43–2004, Revision and consolidation of ANSI C78.1372–1997, .1374–1997, .1375–1997, .1376–1997, .1377–1997, .1378–1997, .1379–1997, .1382–1997,

.1384–1997, and .1650–2003 (''ANSI C78.43''), American National Standard for electric lamps: Single-Ended Metal Halide Lamps, approved May 5, 2004, IBR approved for § 431.322;

(2) ANSI C82.6–2005, Proposed Revision of ANSI C82.6–1985 (''ANSI C82.6''), American National Standard for Lamp Ballasts—Ballasts for High-Intensity Discharge Lamps—Methods of Measurement, approved February 14, 2005, IBR approved for § 431.322; and § 431.324.

(c) *NFPA*. National Fire Protection Association, 11 Tracy Drive, Avon, MA 02322, 1–800–344–3555, or go to *http://www.nfpa.org;*

(1) NFPA 70–2002 (''NFPA 70''), National Electrical Code 2002 Edition, IBR approved for § 431.326;

(2) [Reserved]

(e) UL. Underwriters Laboratories, Inc., COMM 2000, 1414 Brook Drive, Downers Grove, IL 60515, 1–888–853–3503, or go to *http://www.ul.com.*

(1) UL 1029 (ANSI/UL 1029–2007) (''UL 1029''), Standard for Safety High-Intensity-Discharge Lamp Ballasts, 5th edition, May 25, 1994, which consists of pages dated May 25, 1994, September 28, 1995, August 3, 1998, February 7, 2001 and December 11, 2007, IBR approved for § 431.326.

(2) [Reserved]

[74 FR 12075, Mar. 23, 2009, as amended at 75 FR 10966, Mar. 9, 2010]

§ 431.324 Uniform test method for the measurement of energy efficiency and standby mode energy consumption of metal halide lamp ballasts.

(a) *Scope*. This section provides test procedures for measuring, pursuant to EPCA, the energy efficiency of metal halide ballasts.

(b) *Testing and Calculations Active Mode*. (1)(i) *Test Conditions*. The power supply, ballast test conditions, lamp position, lamp stabilization, and test instrumentation shall all conform to the requirements specified in section 4.0, ''General Conditions for Electrical Performance Tests,'' of ANSI C82.6 (incorporated by reference; see § 431.323). Ambient temperatures for the testing period shall be maintained at 25 °C ±5 °C. Airflow in the room for the testing period shall be ≤0.5 meters/second. The ballast shall be operated until equilibrium. Lamps used in the test shall conform to the general requirements in section 4.4.1 of ANSI C82.6 and be seasoned for a minimum of 100 hour prior to use in ballast tests. Basic lamp stabilization shall conform to the general requirements in section 4.4.2 of ANSI C82.6, and stabilization shall be reached when the lamp's electrical characteristics vary by no more than 3-percent in three consecutive 10- to 15-minute intervals measured after the minimum burning time of 30 minutes. After the stabilization process has begun, the lamp shall not be moved or repositioned until after the testing is complete. In order to avoid heating up the test ballast during lamp stabilization, which could cause resistance changes and result in unrepeatable data, it is necessary to warm up the lamp on a standby ballast. This standby ballast should be a commercial ballast of a type similar to the test ballast in order to be able to switch a stabilized lamp to the test ballast without extinguishing the lamp. Fast-acting or make-before-break switches are recommended to prevent the lamps from extinguishing during switchover.

(ii) Alternative Stabilization Method. In cases where switching without extinguishing the lamp is impossible or for low-frequency electronic ballasts, the following alternative stabilization method shall be used. The lamp characteristics are determined using a reference ballast and recorded for future comparison. The same lamp is to be driven by the ballast under test until the ballast reaches operational stability. Operational stability is defined by three consecutive measurements, 5 minutes apart, of the lamp power where the three readings are within 2.5 percent. The electrical measurements are to be taken within 5 minutes after conclusion of the stabilization period.

(2) *Test Measurement*. The ballast input power and lamp output power during operating conditions shall be measured in accordance with the methods specified in section 6.0, ''Ballast Measurements (Multiple-Supply Type Ballasts)'' of the ANSI C82.6 (incorporated by reference; *see* § 431.323).

(3) *Efficiency Calculation.* The measured lamp output power shall be divided by the ballast input power to determine the percent efficiency of the ballast under test.

(c) *Testing and Calculations-Standby Mode.* The measurement of standby mode need not be performed to determine compliance with energy conservation standards for metal halide lamp fixtures at this time. The above statement will be removed as part of the rulemaking to amend the energy conservation standards for metal halide lamp fixtures to account for standby mode energy consumption, and the following shall apply on the compliance date for such requirements. However, all representations related to standby mode energy consumption of these products made after September 7, 2010, must be based upon results generated under this test procedure.

(1) *Test Conditions.* The power supply, ballast test conditions, and test instrumentation shall all conform to the requirements specified in section 4.0, ''General Conditions for Electrical Performance Tests,'' of the ANSI C82.6 (incorporated by reference; see § 431.323) Ambient temperatures for the testing period shall be maintained at 25 °C ±5 °C. Send a signal to the ballast instructing it to have zero light output using the appropriate ballast communication protocol or system for the ballast being tested.

(2) *Measurement of Main Input Power.* Measure the input power (watts) to the ballast in accordance with the methods specified in section 6.0, ''Ballast Measurements (Multiple-Supply Type Ballasts)'' of the ANSI C82.6 (incorporated by reference; see § 431.323).

(3) *Measurement of Control Signal Power.* The power from the control signal path is measured using all applicable methods described below:

(i) *DC Control Signal.* Measure the DC control signal voltage, using a voltmeter (V), and current, using an ammeter (A) connected to the ballast in accordance with the circuit shown in Figure 1. The DC control signal power is calculated by multiplying the DC control signal voltage by the DC control signal current.

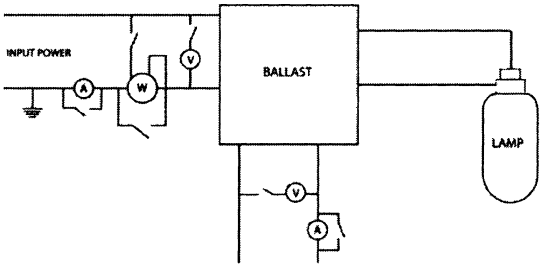

Figure 1. Circuit for Measuring DC Control Signal Power in Standby Mode

(ii) *AC Control Signal.* Measure the AC control signal power (watts), using a wattmeter capable of indicating true RMS power in watts (W), connected to the ballast in accordance with the circuit shown in Figure 2.

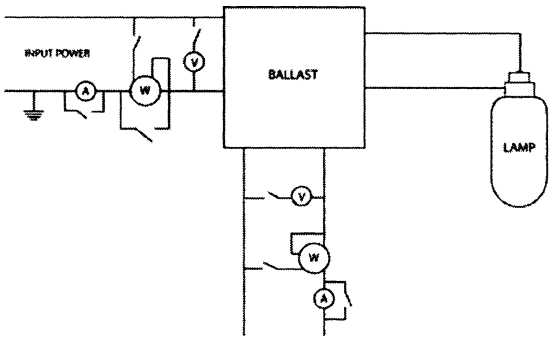

Figure 2. Circuit for Measuring AC Control Signal Power in Standby Mode

(iii) *Power Line Carrier (PLC) Control Signal.* Measure the PLC control signal power (watts), using a wattmeter capable of indicating true RMS power in watts (W) connected to the ballast in accordance with the circuit shown in Figure 3. The wattmeter must have a frequency response that is at least 10 times higher than the PLC being measured to measure the PLC signal correctly. The wattmeter must also be high-pass filtered to filter out power at 60 Hz.

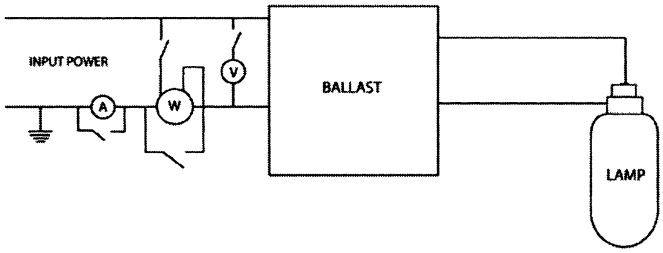

Figure 3. Circuit for Measuring PLC Control Signal Power in Standby Mode

[74 FR 12075, Mar. 23, 2009, as amended at 75 FR 10966, Mar. 9, 2010]

ENERGY CONSERVATION STANDARDS

§431.326 Energy conservation standards and their effective dates.

(a) Except as provided in paragraph (b) of this section, each metal halide lamp fixture manufactured on or after January 1, 2009, and designed to be operated with lamps rated greater than or equal to 150 watts but less than or equal to 500 watts shall contain—

(1) A pulse-start metal halide ballast with a minimum ballast efficiency of 88 percent;

(2) A magnetic probe-start ballast with a minimum ballast efficiency of 94 percent; or

(3) A nonpulse-start electronic ballast with either a minimum ballast efficiency of 92 percent for wattages greater than 250 watts; or a minimum ballast efficiency of 90 percent for wattages less than or equal to 250 watts.

(b) The standards described in paragraph (a) of this section do not apply to—

(1) Metal halide lamp fixtures with regulated lag ballasts;

(2) Metal halide lamp fixtures that use electronic ballasts that operate at 480 volts; or

(3) Metal halide lamp fixtures that;

(i) Are rated only for 150 watt lamps;

(ii) Are rated for use in wet locations; as specified by the National Fire Protection Association in NFPA 70 (incorporated by reference; *see* § 431.323); and

(iii) Contain a ballast that is rated to operate at ambient air temperatures above 50 °C, as specified in UL 1029, (incorporated by reference; *see* § 431.323).

Subpart T [Reserved]

Subpart U—Enforcement for Electric Motors

SOURCE: 69 FR 61941, Oct. 21, 2004, unless otherwise noted. Redesignated at 70 FR 60416, Oct. 18, 2005.

§ 431.381 Purpose and scope for electric motors.

This subpart describes violations of EPCA's energy conservation requirements, specific procedures we will follow in pursuing alleged non-compliance of an electric motor with an applicable energy conservation standard or labeling requirement, and general procedures for enforcement action, largely drawn directly from EPCA, that apply to electric motors.

[76 FR 12505, Mar. 7, 2011]

§ 431.382 Prohibited acts.

(a) Each of the following is a prohibited act under sections 332 and 345 of the Act:

(1) Distribution in commerce by a manufacturer or private labeler of any ''new covered equipment'' which is not labeled in accordance with an applicable labeling rule prescribed in accordance with Section 344 of the Act, and in this part;

(2) Removal from any ''new covered equipment'' or rendering illegible, by a manufacturer, distributor, retailer, or private labeler, of any label required under this part to be provided with such covered equipment;

(3) Failure to permit access to, or copying of records required to be supplied under the Act and this part, or failure to make reports or provide other information required to be supplied under the Act and this part;

(4) Advertisement of an electric motor or motors, by a manufacturer, distributor, retailer, or private labeler, in a catalog from which the equipment may be purchased, without including in the catalog all information as required by § 431.31(b)(1), provided, however, that this shall not apply to an advertisement of an electric motor in a catalog if distribution of the catalog began before the effective date of the labeling rule applicable to that motor;

(5) Failure of a manufacturer to supply at his expense a reasonable number of units of covered equipment to a test laboratory designated by the Secretary;

(6) Failure of a manufacturer to permit a representative designated by the Secretary to observe any testing required by the Act and this part, and to inspect the results of such testing; and

(7) Distribution in commerce by a manufacturer or private labeler of any new covered equipment which is not in compliance with an applicable energy efficiency standard prescribed under the Act and this part.

(b) In accordance with sections 333 and 345 of the Act, any person who knowingly violates any provision of paragraph (a) of this section may be subject to assessment of a civil penalty of no more than $110 for each violation. Each violation of paragraphs (a)(1), (2), and (7) of this section shall constitute a separate violation with respect to each unit of any covered equipment, and each day of noncompliance with paragraphs (a)(3) through (6) of this section shall constitute a separate violation.

(c) For purposes of this section:

(1) The term ''new covered equipment'' means covered equipment the title of which has not passed to a purchaser who buys such product for purposes other than:

(i) Reselling it; or

(ii) Leasing it for a period in excess of one year; and

(2) The term ''knowingly'' means:

(i) Having actual knowledge; or

(ii) Presumed to have knowledge deemed to be possessed by a reasonable person who acts in the circumstances,

including knowledge obtainable upon the exercise of due care.

§ 431.383 Enforcement process for electric motors.

(a) *Test notice*. Upon receiving information in writing, concerning the energy performance of a particular electric motor sold by a particular manufacturer or private labeler, which indicates that the electric motor may not be in compliance with the applicable energy efficiency standard, or upon undertaking to ascertain the accuracy of the efficiency rating on the nameplate or in marketing materials for an electric motor, disclosed pursuant to subpart B of this part, the Secretary may conduct testing of that electric motor under this subpart by means of a test notice addressed to the manufacturer in accordance with the following requirements:

(1) The test notice procedure will only be followed after the Secretary or his/her designated representative has examined the underlying test data (or, where appropriate, data as to use of an alternative efficiency determination method) provided by the manufacturer and after the manufacturer has been offered the opportunity to meet with the Department to verify, as applicable, compliance with the applicable efficiency standard, or the accuracy of labeling information, or both. In addition, where compliance of a basic model was certified based on an AEDM, the Department shall have the discretion to pursue the provisions of § 431.17(a)(4)(iii) prior to invoking the test notice procedure. A representative designated by the Secretary shall be permitted to observe any reverification procedures undertaken pursuant to this subpart, and to inspect the results of such reverification.

(2) The test notice will be signed by the Secretary or his/her designee. The test notice will be mailed or delivered by the Department to the plant manager or other responsible official, as designated by the manufacturer.

(3) The test notice will specify the model or basic model to be selected for testing, the method of selecting the test sample, the date and time at which testing shall be initiated, the date by which testing is scheduled to be completed and the facility at which testing will be conducted. The test notice may also provide for situations in which the specified basic model is unavailable for testing, and may include alternative basic models.

(4) The Secretary may require in the test notice that the manufacturer of an electric motor shall ship at his expense a reasonable number of units of a basic model specified in such test notice to a testing laboratory designated by the Secretary. The number of units of a basic model specified in a test notice shall not exceed 20.

(5) Within five working days of the time the units are selected, the manufacturer shall ship the specified test units of a basic model to the testing laboratory.

(b) *Testing laboratory*. Whenever the Department conducts enforcement testing at a designated laboratory in accordance with a test notice under this section, the resulting test data shall constitute official test data for that basic model. Such test data will be used by the Department to make a determination of compliance or noncompliance if a sufficient number of tests have been conducted to satisfy the requirements of appendix A of this subpart.

(c) *Sampling*. The determination that a manufacturer's basic model complies with its labeled efficiency, or the applicable energy efficiency standard, shall be based on the testing conducted in accordance with the statistical sampling procedures set forth in appendix A of this subpart and the test procedures set forth in appendix B to subpart B of this part.

(d) *Test unit selection*. A Department inspector shall select a batch, a batch sample, and test units from the batch sample in accordance with the provisions of this paragraph and the conditions specified in the test notice.

(1) The batch may be subdivided by the Department utilizing criteria specified in the test notice.

(2) A batch sample of up to 20 units will then be randomly selected from one or more subdivided groups within the batch. The manufacturer shall keep on hand all units in the batch sample until such time as the basic model is

determined to be in compliance or noncompliance.

(3) Individual test units comprising the test sample shall be randomly selected from the batch sample.

(4) All random selection shall be achieved by sequentially numbering all of the units in a batch sample and then using a table of random numbers to select the units to be tested.

(e) *Test unit preparation.* (1) Prior to and during the testing, a test unit selected in accordance with paragraph (d) of this section shall not be prepared, modified, or adjusted in any manner unless such preparation, modification, or adjustment is allowed by the applicable Department of Energy test procedure. One test shall be conducted for each test unit in accordance with the applicable test procedures prescribed in appendix B to subpart B of this part.

(2) No quality control, testing, or assembly procedures shall be performed on a test unit, or any parts and sub-assemblies thereof, that is not performed during the production and assembly of all other units included in the basic model.

(3) A test unit shall be considered defective if such unit is inoperative or is found to be in noncompliance due to failure of the unit to operate according to the manufacturer's design and operating instructions. Defective units, including those damaged due to shipping or handling, shall be reported immediately to the Department. The Department shall authorize testing of an additional unit on a case-by-case basis.

(f) *Testing at manufacturer's option.* (1) If a manufacturer's basic model is determined to be in noncompliance with the applicable energy performance standard at the conclusion of Department testing in accordance with the sampling plan specified in appendix A of this subpart, the manufacturer may request that the Department conduct additional testing of the basic model according to procedures set forth in appendix A of this subpart.

(2) All units tested under this paragraph shall be selected and tested in accordance with the provisions given in paragraphs (a) through (e) of this section.

(3) The manufacturer shall bear the cost of all testing conducted under this paragraph.

(4) The manufacturer shall cease distribution of the basic model tested under the provisions of this paragraph from the time the manufacturer elects to exercise the option provided in this paragraph until the basic model is determined to be in compliance. The Department may seek civil penalties for all units distributed during such period.

(5) If the additional testing results in a determination of compliance, a notice of allowance to resume distribution shall be issued by the Department.

EFFECTIVE DATE NOTE: At 78 FR 75995, Dec. 13, 2013, § 431.383 was amended by adding paragraph (e)(4), effective Jan. 13, 2014. For the convenience of the user, the added text is set forth as follows:

§ 431.383 Enforcement process for electric motors.

* * * * *

(e) * * *

(4)(i) *Non-standard endshields or flanges.* For purposes of DOE-initiated testing of electric motors with non-standard endshields or flanges, the Department will have the discretion to determine whether the lab should test a general purpose electric motor of equivalent electrical design and enclosure rather than replacing the nonstandard flange or endshield.

(ii) *Partial electric motors.* For purposes of DOE-initiated testing, the Department has the discretion to determine whether the lab should test a general purpose electric motor of equivalent electrical design and enclosure rather than machining and attaching an endshield.

* * * * *

§ 431.384 [Reserved]

§ 431.385 Cessation of distribution of a basic model of an electric motor.

(a) In the event that a model of an electric motor is determined non-compliant by the Department in accordance with § 431.192 or if a manufacturer or private labeler determines a model of an electric motor to be in noncompliance, then the manufacturer or private labeler shall:

(1) Immediately cease distribution in commerce of the basic model.

(2) Give immediate written notification of the determination of noncompliance, to all persons to whom the manufacturer has distributed units of the basic model manufactured since the date of the last determination of compliance.

(3) Pursuant to a request made by the Secretary, provide the Department within 30 days of the request, records, reports, and other documentation pertaining to the acquisition, ordering, storage, shipment, or sale of a basic model determined to be in noncompliance.

(4) The manufacturer may modify the non-compliant basic model in such manner as to make it comply with the applicable performance standard. Such modified basic model shall then be treated as a new basic model and must be certified in accordance with the provisions of this subpart; except that in addition to satisfying all requirements of this subpart, the manufacturer shall also maintain records that demonstrate that modifications have been made to all units of the new basic model prior to distribution in commerce.

(b) If a basic model is not properly certified in accordance with the requirements of this subpart, the Secretary may seek, among other remedies, injunctive action to prohibit distribution in commerce of such basic model.

§ 431.386 Remedies.

If the Secretary determines that a basic model of any covered equipment does not comply with an applicable energy conservation standard:

(a) The Secretary will notify the manufacturer, private labeler, or any other person as required, of this finding and of the Secretary's intent to seek a judicial order restraining further distribution in commerce of units of such a basic model unless the manufacturer, private labeler or other person as required, delivers, within 15 calendar days, a satisfactory statement to the Secretary, of the steps the manufacturer, private labeler or other person will take to insure that the noncompliant basic model will no longer be distributed in commerce. The Secretary will monitor the implementation of such statement.

(b) If the manufacturer, private labeler or any other person as required, fails to stop distribution of the noncompliant basic model, the Secretary may seek to restrain such violation in accordance with sections 334 and 345 of the Act.

(c) The Secretary will determine whether the facts of the case warrant the assessment of civil penalties for knowing violations in accordance with sections 333 and 345 of the Act.

§ 431.387 Hearings and appeals.

(a) Under sections 333(d) and 345 of the Act, before issuing an order assessing a civil penalty against any person, the Secretary must provide to such a person a notice of the proposed penalty. Such notice must inform the person that such person can choose (in writing within 30 days after receipt of the notice) to have the procedures of paragraph (c) of this section (in lieu of those in paragraph (b) of this section) apply with respect to such assessment.

(b)(1) Unless a person elects, within 30 calendar days after receipt of a notice under paragraph (a) of this section, to have paragraph (c) of this section apply with respect to the civil penalty under paragraph (a), the Secretary will assess the penalty, by order, after providing an opportunity for an agency hearing under 5 U.S.C. 554, before an administrative law judge appointed under 5 U.S.C. 3105, and making a determination of violation on the record. Such assessment order will include the administrative law judge's findings and the basis for such assessment.

(2) Any person against whom the Secretary assesses a penalty under this paragraph may, within 60 calendar days after the date of the order assessing such penalty, initiate action in the United States Court of Appeals for the appropriate judicial circuit for judicial review of such order in accordance with 5 U.S.C. chapter 7. The court will have jurisdiction to enter a judgment affirming, modifying, or setting aside in whole or in part, the order of the Secretary, or the court may remand the proceeding to the Secretary for such further action as the court may direct.

(c)(1) In the case of any civil penalty with respect to which the procedures of this paragraph have been elected, the Secretary will promptly assess such penalty, by order, after the date of the receipt of the notice under paragraph (a) of this section of the proposed penalty.

(2) If the person has not paid the civil penalty within 60 calendar days after the assessment has been made under paragraph (c)(1) of this section, the Secretary will institute an action in the appropriate District Court of the United States for an order affirming the assessment of the civil penalty. The court will have authority to review de novo the law and the facts involved and jurisdiction to enter a judgment enforcing, modifying, and enforcing as so modified, or setting aside in whole or in part, such assessment.

(3) Any election to have this paragraph apply can only be revoked with the consent of the Secretary.

(d) If any person fails to pay an assessment of a civil penalty after it has become a final and unappealable order under paragraph (b) of this section, or after the appropriate District Court has entered final judgment in favor of the Secretary under paragraph (c) of this section, the Secretary will institute an action to recover the amount of such penalty in any appropriate District Court of the United States. In such action, the validity and appropriateness of such final assessment order or judgment will not be subject to review.

(e)(1) In accordance with the provisions of sections 333(d)(5)(A) and 345 of the Act and notwithstanding the provisions of title 28, United States Code, or Section 502(c) of the Department of Energy Organization Act, the General Counsel of the Department of Energy (or any attorney or attorneys within DOE designated by the Secretary) will represent the Secretary, and will supervise, conduct, and argue any civil litigation to which paragraph (c) of this section applies (including any related collection action under paragraph (d) of this section) in a court of the United States or in any other court, except the Supreme Court of the United States. However, the Secretary or the General Counsel will consult with the Attorney General concerning such litigation and the Attorney General will provide, on request, such assistance in the conduct of such litigation as may be appropriate.

(2) In accordance with the provisions of sections 333(d)(5)(B) and 345 of the Act, and subject to the provisions of Section 502(c) of the Department of Energy Organization Act, the Secretary will be represented by the Attorney General, or the Solicitor General, as appropriate, in actions under this section, except to the extent provided in paragraph (e)(1) of this section.

(3) In accordance with the provisions of Section 333(d)(5)(c) and 345 of the Act, Section 402(d) of the Department of Energy Organization Act will not apply with respect to the function of the Secretary under this section.

APPENDIX A TO SUBPART U OF PART 431—SAMPLING PLAN FOR ENFORCEMENT TESTING OF ELECTRIC MOTORS

Step 1. The first sample size (n_1) must be five or more units.

Step 2. Compute the mean ($\bar{X}_1$ of the measured energy performance of the n_1 units in the first sample as follows:

$$\overline{X}_1 = \frac{1}{n_1}\sum_{i=1}^{n_1} X_i \qquad (1)$$

where X_i is the measured full-load efficiency of unit i.

Step 3. Compute the sample standard deviation (S_1) of the measured full-load efficiency of the n_1 units in the first sample as follows:

$$S_1 = \sqrt{\frac{\sum_{i=1}^{n_1}\left(X_i - \overline{X}_1\right)^2}{n_1 - 1}} \qquad (2)$$

Step 4. Compute the standard error ($SE(\bar{X}_1)$) of the mean full-load efficiency of the first sample as follows:

$$SE\left(\overline{X}_1\right) = \frac{S_1}{\sqrt{n_1}} \qquad (3)$$

Step 5. Compute the lower control limit (LCL_1) for the mean of the first sample using RE as the desired mean as follows:

$$LCL_1 = RE - tSE\left(\overline{X}_1\right) \qquad (4)$$

where: RE is the applicable EPCA nominal full-load efficiency when the test is to determine compliance with the applicable statutory standard, or is the labeled nominal full-load efficiency when the test is to determine compliance with the labeled efficiency value, and t is the 2.5th percentile of a t-distribution for a sample size of n_1, which yields a 97.5 percent confidence level for a one-tailed t-test.

Step 6. Compare the mean of the first sample ($\bar{X}_1$) with the lower control limit (LCL_1) to determine one of the following:

(i) If the mean of the first sample is below the lower control limit, then the basic model is in non-compliance and testing is at an end.

(ii) If the mean is equal to or greater than the lower control limit, no final determination of compliance or non-compliance can be made; proceed to Step 7.

Step 7. Determine the recommended sample size (n) as follows:

$$n = \left[\frac{tS_1(120 - 0.2RE)}{RE\,(20 - 0.2RE)}\right]^2 \qquad (5)$$

where S_1, RE and t have the values used in Steps 3 and 5, respectively. The factor

$$\frac{120 - 0.2RE}{RE\,(20 - 0.2RE)}$$

is based on a 20 percent tolerance in the total power loss at full-load and fixed output power.

Given the value of n, determine one of the following:

(i) If the value of n is less than or equal to n_1 and if the mean energy efficiency of the first sample ($\bar{X}_1$) is equal to or greater than the lower control limit (LCL_1), the basic model is in compliance and testing is at an end.

(ii) If the value of n is greater than n1, the basic model is in non-compliance. The size of a second sample n_2 is determined to be the smallest integer equal to or greater than the difference $n - n_1$. If the value of n_2 so calculated is greater than $20 - n1$, set n_2 equal to $20 - n_1$.

Step 8. Compute the combined ($\bar{X}_2$) mean of the measured energy performance of the n_1 and n_2 units of the combined first and second samples as follows:

$$\overline{X}_2 = \frac{1}{n_1 + n_2}\sum_{i=1}^{n_1+n_2} X_i \qquad (6)$$

Step 9. Compute the standard error ($SE(\bar{X}_2)$) of the mean full-load efficiency of the n_1 and n_2 units in the combined first and second samples as follows:

$$SE\,(\overline{X}_2) = \frac{S_1}{\sqrt{n_1 + n_2}} \qquad (7)$$

(Note that S_1 is the value obtained above in Step 3.)

Step 10. Set the lower control limit (LCL_2) to,

$$LCL_2 = RE - tSE\,(\overline{X}_2) \qquad (8)\sqrt{b^2 - 4ac}$$

where t has the value obtained in Step 5, and compare the combined sample mean ($\bar{X}_2$) to the lower control limit (LCL_2) to find one of the following:

(i) If the mean of the combined sample ($\bar{X}_2$) is less than the lower control limit (LCL_2), the basic model is in non-compliance and testing is at an end.

(ii) If the mean of the combined sample ($\bar{X}_2$) is equal to or greater than the lower control limit (LCL_2), the basic model is in compliance and testing is at an end.

MANUFACTURER-OPTION TESTING

If a determination of non-compliance is made in Steps 6, 7 or 10, of this appendix A, the manufacturer may request that additional testing be conducted, in accordance with the following procedures.

Step A. The manufacturer requests that an additional number, n_3, of units be tested, with n_3 chosen such that $n_1 + n_2 + n_3$ does not exceed 20.

Step B. Compute the mean full-load efficiency, standard error, and lower control limit of the new combined sample in accordance with the procedures prescribed in Steps 8, 9, and 10, of this appendix A.

Step C. Compare the mean performance of the new combined sample to the lower control limit (LCL_2) to determine one of the following:

(a) If the new combined sample mean is equal to or greater than the lower control limit, the basic model is in compliance and testing is at an end.

(b) If the new combined sample mean is less than the lower control limit and the value of $n_1 + n_2 + n_3$ is less than 20, the manufacturer may request that additional units be tested. The total of all units tested may not exceed 20. Steps A, B, and C are then repeated.

(c) Otherwise, the basic model is determined to be in non-compliance.

Subpart V—General Provisions

SOURCE: 69 FR 61941, Oct. 21, 2004, unless otherwise noted. Redesignated at 70 FR 60417, Oct. 18, 2005.

§ 431.401 Petitions for waiver, and applications for interim waiver, of test procedure.

(a) *General criteria.* (1) Any interested person may submit a petition to waive for a particular basic model any requirements of §§ 431.16, 431.76, 431.86, 431.96, and 431.106 of this part, upon the grounds that either the basic model contains one or more design characteristics which prevent testing of the basic model according to the prescribed test procedures, or the prescribed test procedures may evaluate the basic model in a manner so unrepresentative of its true energy consumption characteristics as to provide materially inaccurate comparative data.

(2) Any person who has submitted a Petition for Waiver as provided in this subpart, may also file an Application for Interim Waiver of the applicable test procedure requirements.

(b) *Submission, content, and publication.* (1) A Petition for Waiver shall be submitted either electronically to *AS_Waiver_Requests@ee.doe.gov* or by mail, in triplicate, to U.S. Department of Energy, Building Technologies Program, Test Procedure Waiver, 1000 Independence Avenue, SW., Mailstop EE–2J, Washington, DC 20585–0121. Each Petition for Waiver shall:

(i) Identify the particular basic model(s) for which a waiver is requested, the design characteristic(s) constituting the grounds for the petition, and the specific requirements sought to be waived, and must discuss in detail the need for the requested waiver;

(ii) Identify manufacturers of all other basic models marketed in the United States and known to the petitioner to incorporate similar design characteristic(s);

(iii) Include any alternate test procedures known to the petitioner to evaluate the characteristics of the basic model in a manner representative of its energy consumption; and

(iv) Be signed by you or by an authorized representative. In accordance with the provisions set forth in 10 CFR 1004.11, any request for confidential treatment of any information contained in a Petition for Waiver or in supporting documentation must be accompanied by a copy of the petition, application or supporting documentation from which the information claimed to be confidential has been deleted. DOE will publish in the FEDERAL REGISTER the petition and supporting documents from which confidential information, as determined by DOE, has been deleted in accordance with 10 CFR 1004.11 and will solicit comments, data and information with respect to the determination of the petition.

(2) You must submit any Application for Interim Waiver in triplicate, with the required three copies of the Petition for Waiver, to the Assistant Secretary for Energy Efficiency and Renewable Energy, U.S. Department of Energy. Each Application for Interim Waiver must reference the Petition for Waiver by identifying the particular basic model(s) for which you seek a waiver and temporary exception. Each Application for Interim Waiver must demonstrate likely success of the Petition for Waiver and address what economic hardship and/or competitive disadvantage is likely to result absent a favorable determination on the Application for Interim Waiver. You or an authorized representative must sign the Application for Interim Waiver.

(c) *Notification to other manufacturers.* (1) After filing a Petition for Waiver with DOE, and after DOE has published the Petition for Waiver in the FEDERAL REGISTER, you must, within five working days of such publication, notify in writing all known manufacturers of domestically marketed units of the same product type (as defined in Section 340(1) of the Act) and must include in the notice a statement that DOE has published in the FEDERAL REGISTER on a certain date the Petition for Waiver and supporting documents from which confidential information, if any, as determined by DOE, has been deleted in accordance with 10 CFR 1004.11. In complying with the requirements of this paragraph, you must file with DOE a statement certifying the names and addresses of each person to whom you have sent a notice of the Petition for Waiver.

(2) If you apply for Interim Waiver, whether filing jointly with or subsequent to your Petition for Waiver with DOE, you must concurrently notify in

writing all known manufacturers of domestically marketed units of the same product type (as defined in Section 340(1) of the Act), and must include in the notice a copy of the Petition for Waiver and a copy of the Application for Interim Waiver. In complying with this section, you must in the written notification include a statement that the Assistant Secretary for Energy Efficiency and Renewable Energy will receive and consider timely written comments on the Application for Interim Waiver. Upon filing an Application for Interim Waiver, you must in complying with the requirements of this paragraph certify to DOE that a copy of these documents has been sent to all known manufacturers of domestically marked units of the same product type (as listed in Section 340(1) of the Act). Such certification must include the names and addresses of such persons. You must comply with the provisions of paragraph (c)(1) of this Section with respect to the petition for waiver.

(d) *Comments; responses to comments.* (1) Any person submitting written comments to DOE with respect to an Application for Interim Waiver must also send a copy of the comments to the applicant.

(2) Any person submitting written comments to DOE with the respect to a Petition for Waiver must also send a copy of such comments to the petitioner. In accordance with paragraph (b)(1) of this section, a petitioner may submit a rebuttal statement to the Assistant Secretary for Energy Efficiency and Renewable Energy.

(e) *Provisions specific to interim waivers*—(1) *Disposition of application.* If administratively feasible, DOE will notify the applicant in writing of the disposition of the Application for Interim Waiver within 15 business days of receipt of the application. Notice of DOE's determination on the Application for Interim Waiver will be published in the FEDERAL REGISTER.

(2) *Consequences of filing application.* The filing of an Application for Interim Waiver will not constitute grounds for noncompliance with any requirements of this subpart, until an Interim Waiver has been granted.

(3) *Criteria for granting.* The Assistant Secretary for Energy Efficiency and Renewable Energy will grant an Interim Waiver from test procedure requirements if he or she determines that the applicant will experience economic hardship if the Application for Interim Waiver is denied, if it appears likely that the Petition for Waiver will be granted, and/or if the Assistant Secretary determines that it would be desirable for public policy reasons to grant immediate relief pending a determination on the Petition for Waiver.

(4) *Duration.* An interim waiver will terminate 180 days after issuance or upon the determination on the Petition for Waiver, whichever occurs first. DOE may extend an interim waiver for up to 180 days or modify its terms based on relevant information contained in the record and any comments received subsequent to issuance of the interim waiver. DOE will publish in the FEDERAL REGISTER notice of such extension and/or any modification of the terms or duration of the interim waiver.

(f) *Provisions specific to waivers*—(1) *Rebuttal by petitioner.* Following publication of the Petition for Waiver in the FEDERAL REGISTER, a petitioner may, within 10 working days of receipt of a copy of any comments submitted in accordance with paragraph (b)(1) of this section, submit a rebuttal statement to the Assistant Secretary for Energy Efficiency and Renewable Energy. A petitioner may rebut more than one response in a single rebuttal statement.

(2) *Disposition of petition.* DOE will notify the petitioner in writing as soon as practicable of the disposition of each Petition for Waiver. The Assistant Secretary for Energy Efficiency and Renewable Energy will issue a decision on the petition as soon as is practicable following receipt and review of the Petition for Waiver and other applicable documents, including, but not limited to, comments and rebuttal statements.

(3) *Consequence of filing petition.* The filing of a Petition for Waiver will not constitute grounds for noncompliance with any requirements of this subpart, until a waiver or interim waiver has been granted.

(4) *Granting: criteria, conditions, and publication.* The Assistant Secretary for

Energy Efficiency and Renewable Energy will grant a waiver if he or she determines that either the basic model for which the waiver was requested contains a design characteristic which prevents testing of the basic model according to the prescribed test procedures, or the prescribed test procedures may evaluate the basic model in a manner so unrepresentative of its true energy consumption characteristics as to provide materially inaccurate comparative data. The Assistant Secretary for Energy Efficiency and Renewable Energy may grant a waiver subject to conditions, which may include adherence to alternate test procedures. DOE will promptly publish in the FEDERAL REGISTER notice of each waiver granted or denied, and any limiting conditions of each waiver granted.

(g) *Revision of regulation.* Within one year of the granting of any waiver, the Department will publish in the FEDERAL REGISTER a notice of proposed rulemaking to amend our regulations so as to eliminate any need for the continuation of such waiver. As soon thereafter as practicable, the Department will publish in the FEDERAL REGISTER a final rule. Such waiver will terminate on the effective date of such final rule.

(h) *Exhaustion of remedies.* In order to exhaust administrative remedies, any person aggrieved by an action under this Section must file an appeal with the DOE's Office of Hearings and Appeals as provided in 10 CFR part 1003, subpart C.

[69 FR 61941, Oct. 21, 2004, as amended at 76 FR 12505, Mar. 7, 2011]

§ 431.402 Preemption of State regulations for commercial HVAC & WH products.

Beginning on the effective date of such standard, an energy conservation standard set forth in this part for a commercial HVAC & WH product supersedes any State or local regulation concerning the energy efficiency or energy use of that product, except as provided for in Section 345(b)(2)(B)–(D) of the Act.

§ 431.403 Maintenance of records for electric motors.

(a) Manufacturers of electric motors must establish, maintain and retain records of the following:

(1) The test data for all testing conducted pursuant to this part;

(2) The development, substantiation, application, and subsequent verification of any AEDM used under this part;

(3) Any written certification received from a certification program, including a certificate or conformity, relied on under the provisions of this part;

(b) You must organize such records and index them so that they are readily accessible for review. The records must include the supporting test data associated with tests performed on any test units to satisfy the requirements of this part (except tests performed by DOE).

(c) For each basic model, you must retain all such records for a period of two years from the date that production of all units of that basic model has ceased. You must retain records in a form allowing ready access to DOE, upon request.

[76 FR 12505, Mar. 7, 2011]

§ 431.404 Imported electric motors.

(a) Under sections 331 and 345 of the Act, any person importing an electric motor into the United States must comply with the provisions of the Act and of this part, and is subject to the remedies of this part.

(b) Any electric motor offered for importation in violation of the Act and of this part will be refused admission into the customs territory of the United States under rules issued by the Secretary of the Treasury, except that the Secretary of the Treasury may, by such rules, authorize the importation of such electric motor upon such terms and conditions (including the furnishing of a bond) as may appear to the Secretary of the Treasury appropriate to ensure that such electric motor will not violate the Act and this part, or will be exported or abandoned to the United States.

[76 FR 12505, Mar. 7, 2011]

§431.405 Exported electric motors.

Under Sections 330 and 345 of the Act, this part does not apply to any electric motor if:

(a) Such electric motor is manufactured, sold, or held for sale for export from the United States (or such electric motor was imported for export), unless such electric motor is, in fact, distributed in commerce for use in the United States; and,

(b) Such electric motor, when distributed in commerce, or any container in which it is enclosed when so distributed, bears a stamp or label stating that such electric motor is intended for export.

[76 FR 12505, Mar. 7, 2011]

§431.406 Subpoena—Electric Motors.

Pursuant to sections 329(a) and 345 of the Act, for purposes of carrying out this part, the Secretary or the Secretary's designee, may sign and issue subpoenas for the attendance and testimony of witnesses and the production of relevant books, records, papers, and other documents, and administer the oaths. Witnesses summoned under the provisions of this section shall be paid the same fees and mileage as are paid to witnesses in the courts of the United States. In case of contumacy by, or refusal to obey a subpoena served upon any persons subject to this part, the Secretary may seek an order from the District Court of the United States for any District in which such person is found or resides or transacts business requiring such person to appear and give testimony, or to appear and produce documents. Failure to obey such order is punishable by such court as a contempt thereof.

[76 FR 12505, Mar. 7, 2011]

§431.407 Confidentiality—Electric Motors.

Pursuant to the provisions of 10 CFR 1004.11, any manufacturer or private labeler of electric motors submitting information or data which they believe to be confidential and exempt from public disclosure should submit one complete copy, and 15 copies from which the information believed to be confidential has been deleted. In accordance with the procedures established at 10 CFR 1004.11, the Department shall make its own determination with regard to any claim that information submitted be exempt from public disclosure.

[76 FR 12505, Mar. 7, 2011]

§431.408 Preemption of State regulations for covered equipment other than electric motors and commercial heating, ventilating, air-conditioning and water heating products.

This section concerns State regulations providing for any energy conservation standard, or water conservation standard (in the case of commercial prerinse spray valves or commercial clothes washers), or other requirement with respect to the energy efficiency, energy use, or water use (in the case of commercial prerinse spray valves or commercial clothes washers), for any covered equipment other than an electric motor or commercial HVAC and WH product. Any such regulation that contains a standard or requirement that is not identical to a Federal standard in effect under this subpart is preempted by that standard, except as provided for in sections 327(b) and (c) and 345(a)(10), (e), (f) and (g) of the Act.

[75 FR 675, Jan. 5, 2010, as amended at 78 FR 62993, Oct. 23, 2013]

Subpart W—Petitions To Exempt State Regulation From Preemption; Petitions To Withdraw Exemption of State Regulation

SOURCE: 69 FR 61941, Oct. 21, 2004, unless otherwise noted. Redesignated at 70 FR 60417, Oct. 18, 2005.

§431.421 Purpose and scope.

(a) The regulations in this subpart prescribe the procedures to be followed in connection with petitions requesting a rule that a State regulation prescribing an energy conservation standard or other requirement respecting energy use or energy efficiency of a type (or class) of covered equipment not be preempted.

(b) The regulations in this subpart also prescribe the procedures to be followed in connection with petitions to

withdraw a rule exempting a State regulation prescribing an energy conservation standard or other requirement respecting energy use or energy efficiency of a type (or class) of covered equipment.

§ 431.422 Prescriptions of a rule.

(a) *Criteria for exemption from preemption.* Upon petition by a State which has prescribed an energy conservation standard or other requirement for a type or class of covered equipment for which a Federal energy conservation standard is applicable, the Secretary shall prescribe a rule that such standard not be preempted if he/she determines that the State has established by a preponderance of evidence that such requirement is needed to meet unusual and compelling State or local energy interests. For the purposes of this regulation, the term ''unusual and compelling State or local energy interests'' means interests which are substantially different in nature or magnitude from those prevailing in the U.S. generally, and are such that when evaluated within the context of the State's energy plan and forecast, the costs, benefits, burdens, and reliability of energy savings resulting from the State regulation make such regulation preferable or necessary when measured against the costs, benefits, burdens, and reliability of alternative approaches to energy savings or production, including reliance on reasonably predictable market-induced improvements in efficiency of all equipment subject to the State regulation. The Secretary may not prescribe such a rule if he finds that interested persons have established, by a preponderance of the evidence, that the State's regulation will significantly burden manufacturing, marketing, distribution, sale or servicing of the covered equipment on a national basis. In determining whether to make such a finding, the Secretary shall evaluate all relevant factors including: The extent to which the State regulation will increase manufacturing or distribution costs of manufacturers, distributors, and others; the extent to which the State regulation will disadvantage smaller manufacturers, distributors, or dealers or lessen competition in the sale of the covered equipment in the State; the extent to which the State regulation would cause a burden to manufacturers to redesign and produce the covered equipment type (or class), taking into consideration the extent to which the regulation would result in a reduction in the current models, or in the projected availability of models, that could be shipped on the effective date of the regulation to the State and within the U.S., or in the current or projected sales volume of the covered equipment type (or class) in the State and the U.S.; and the extent to which the State regulation is likely to contribute significantly to a proliferation of State commercial and industrial equipment efficiency requirements and the cumulative impact such requirements would have. The Secretary may not prescribe such a rule if he/she finds that such a rule will result in the unavailability in the State of any covered equipment (or class) of performance characteristics (including reliability), features, sizes, capacities, and volumes that are substantially the same as those generally available in the State at the time of the Secretary's finding. The failure of some classes (or types) to meet this criterion shall not affect the Secretary's determination of whether to prescribe a rule for other classes (or types).

(1) Requirements of petition for exemption from preemption. A petition from a State for a rule for exemption from preemption shall include the information listed in paragraphs (a)(1)(i) through (a)(1)(vi) of this section. A petition for a rule and correspondence relating to such petition shall be available for public review except for confidential or proprietary information submitted in accordance with the Department of Energy's Freedom of Information Regulations set forth in 10 CFR part 1004.

(i) The name, address, and telephone number of the petitioner;

(ii) A copy of the State standard for which a rule exempting such standard is sought;

(iii) A copy of the State's energy plan and forecast;

(iv) Specification of each type or class of covered equipment for which a rule exempting a standard is sought;

(v) Other information, if any, believed to be pertinent by the petitioner; and

(vi) Such other information as the Secretary may require.

(b) *Criteria for exemption from preemption when energy emergency conditions exist within State.* Upon petition by a State which has prescribed an energy conservation standard or other requirement for a type or class of covered equipment for which a Federal energy conservation standard is applicable, the Secretary may prescribe a rule, effective upon publication in the FEDERAL REGISTER, that such regulation not be preempted if he determines that in addition to meeting the requirements of paragraph (a) of this Section the State has established that: an energy emergency condition exists within the State that imperils the health, safety, and welfare of its residents because of the inability of the State or utilities within the State to provide adequate quantities of gas or electric energy to its residents at less than prohibitive costs; and cannot be substantially alleviated by the importation of energy or the use of interconnection agreements; and the State regulation is necessary to alleviate substantially such condition.

(1) Requirements of petition for exemption from preemption when energy emergency conditions exist within a State. A petition from a State for a rule for exemption from preemption when energy emergency conditions exist within a State shall include the information listed in paragraphs (a)(1)(i) through (a)(1)(vi) of this section. A petition shall also include the information prescribed in paragraphs (b)(1)(i) through (b)(1)(iv) of this section, and shall be available for public review except for confidential or proprietary information submitted in accordance with the Department of Energy's Freedom of Information Regulations set forth in 10 CFR part 1004:

(i) A description of the energy emergency condition which exists within the State, including causes and impacts.

(ii) A description of emergency response actions taken by the State and utilities within the State to alleviate the emergency condition;

(iii) An analysis of why the emergency condition cannot be alleviated substantially by importation of energy or the use of interconnection agreements;

(iv) An analysis of how the State standard can alleviate substantially such emergency condition.

(c) *Criteria for withdrawal of a rule exempting a State standard.* Any person subject to a State standard which, by rule, has been exempted from Federal preemption and which prescribes an energy conservation standard or other requirement for a type or class of covered equipment, when the Federal energy conservation standard for such equipment subsequently is amended, may petition the Secretary requesting that the exemption rule be withdrawn. The Secretary shall consider such petition in accordance with the requirements of paragraph (a) of this section, except that the burden shall be on the petitioner to demonstrate that the exemption rule received by the State should be withdrawn as a result of the amendment to the Federal standard. The Secretary shall withdraw such rule if he determines that the petitioner has shown the rule should be withdrawn.

(1) Requirements of petition to withdraw a rule exempting a State standard. A petition for a rule to withdraw a rule exempting a State standard shall include the information prescribed in paragraphs (c)(1)(i) through (c)(1)(vii) of this section, and shall be available for public review, except for confidential or proprietary information submitted in accordance with the Department of Energy's Freedom of Information Regulations set forth in 10 CFR part 1004:

(i) The name, address and telephone number of the petitioner;

(ii) A statement of the interest of the petitioner for which a rule withdrawing an exemption is sought;

(iii) A copy of the State standard for which a rule withdrawing an exemption is sought;

(iv) Specification of each type or class of covered equipment for which a rule withdrawing an exemption is sought;

(v) A discussion of the factors contained in paragraph (a) of this section;

(vi) Such other information, if any, believed to be pertinent by the petitioner; and

(vii) Such other information as the Secretary may require.

(2) [Reserved]

§ 431.423 Filing requirements.

(a) *Service.* All documents required to be served under this subpart shall, if mailed, be served by first class mail. Service upon a person's duly authorized representative shall constitute service upon that person.

(b) *Obligation to supply information.* A person or State submitting a petition is under a continuing obligation to provide any new or newly discovered information relevant to that petition. Such information includes, but is not limited to, information regarding any other petition or request for action subsequently submitted by that person or State.

(c) *The same or related matters.* A person or State submitting a petition or other request for action shall state whether to the best knowledge of that petitioner the same or related issue, act, or transaction has been or presently is being considered or investigated by any State agency, department, or instrumentality.

(d) *Computation of time.* (1) Computing any period of time prescribed by or allowed under this subpart, the day of the action from which the designated period of time begins to run is not to be included. If the last day of the period is Saturday, or Sunday, or Federal legal holiday, the period runs until the end of the next day that is neither a Saturday, or Sunday or Federal legal holiday.

(2) Saturdays, Sundays, and intervening Federal legal holidays shall be excluded from the computation of time when the period of time allowed or prescribed is 7 days or less.

(3) When a submission is required to be made within a prescribed time, DOE may grant an extension of time upon good cause shown.

(4) Documents received after regular business hours are deemed to have been submitted on the next regular business day. Regular business hours for the DOE's National Office, Washington, DC, are 8:30 a.m. to 4:30 p.m.

(5) DOE reserves the right to refuse to accept, and not to consider, untimely submissions.

(e) *Filing of petitions.* (1) A petition for a rule shall be submitted in triplicate to: The Assistant Secretary for Energy Efficiency and Renewable Energy, U.S. Department of Energy, Section 327 Petitions, Building Technologies, EE–2J, Forrestal Building,1000 Independence Avenue, SW., Washington, DC 20585.

(2) A petition may be submitted on behalf of more than one person. A joint petition shall indicate each person participating in the submission. A joint petition shall provide the information required by § 431.212 for each person on whose behalf the petition is submitted.

(3) All petitions shall be signed by the person(s) submitting the petition or by a duly authorized representative. If submitted by a duly authorized representative, the petition shall certify this authorization.

(4) A petition for a rule to withdraw a rule exempting a State regulation, all supporting documents, and all future submissions shall be served on each State agency, department, or instrumentality whose regulation the petitioner seeks to supersede. The petition shall contain a certification of this service which states the name and mailing address of the served parties, and the date of service.

(f) *Acceptance for filing.* (1) Within 15 days of the receipt of a petition, the Secretary will either accept it for filing or reject it, and the petitioner will be so notified in writing. The Secretary will serve a copy of this notification on each other party served by the petitioner. Only such petitions which conform to the requirements of this subpart and which contain sufficient information for the purposes of a substantive decision will be accepted for filing. Petitions which do not so conform will be rejected and an explanation provided to petitioner in writing.

(2) For purposes of the Act and this subpart, a petition is deemed to be filed on the date it is accepted for filing.

(g) *Docket.* A petition accepted for filing will be assigned an appropriate docket designation. Petitioner shall

use the docket designation in all subsequent submissions.

§ 431.424 Notice of petition.

(a) Promptly after receipt of a petition and its acceptance for filing, notice of such petition shall be published in the FEDERAL REGISTER. The notice shall set forth the availability for public review of all data and information available, and shall solicit comments, data and information with respect to the determination on the petition. Except as may otherwise be specified, the period for public comment shall be 60 days after the notice appears in the FEDERAL REGISTER.

(b) In addition to the material required under paragraph (a) of this section, each notice shall contain a summary of the State regulation at issue and the petitioner's reasons for the rule sought.

§ 431.425 Consolidation.

DOE may consolidate any or all matters at issue in two or more proceedings docketed where there exist common parties, common questions of fact and law, and where such consolidation would expedite or simplify consideration of the issues. Consolidation shall not affect the right of any party to raise issues that could have been raised if consolidation had not occurred.

§ 431.426 Hearing.

The Secretary may hold a public hearing, and publish notice in the FEDERAL REGISTER of the date and location of the hearing, when he determines that such a hearing is necessary and likely to result in a timely and effective resolution of the issues. A transcript shall be kept of any such hearing.

§ 431.427 Disposition of petitions.

(a) After the submission of public comments under § 431.213(a), the Secretary shall prescribe a final rule or deny the petition within 6 months after the date the petition is filed.

(b) The final rule issued by the Secretary or a determination by the Secretary to deny the petition shall include a written statement setting forth his findings and conclusions, and the reasons and basis therefor. A copy of the Secretary's decision shall be sent to the petitioner and the affected State agency. The Secretary shall publish in the FEDERAL REGISTER a notice of the final rule granting or denying the petition and the reasons and basis therefor.

(c) If the Secretary finds that he cannot issue a final rule within the 6-month period pursuant to paragraph (a) of this section, he shall publish a notice in the FEDERAL REGISTER extending such period to a date certain, but no longer than one year after the date on which the petition was filed. Such notice shall include the reasons for the delay.

§ 431.428 Effective dates of final rules.

(a) A final rule exempting a State standard from Federal preemption will be effective:

(1) Upon publication in the FEDERAL REGISTER if the Secretary determines that such rule is needed to meet an ''energy emergency condition'' within the State;

(2) Three years after such rule is published in the FEDERAL REGISTER; or

(3) Five years after such rule is published in the FEDERAL REGISTER if the Secretary determines that such additional time is necessary due to the burdens of retooling, redesign or distribution.

(b) A final rule withdrawing a rule exempting a State standard will be effective upon publication in the FEDERAL REGISTER.

§ 431.429 Request for reconsideration.

(a) Any petitioner whose petition for a rule has been denied may request reconsideration within 30 days of denial. The request shall contain a statement of facts and reasons supporting reconsideration and shall be submitted in writing to the Secretary.

(b) The denial of a petition will be reconsidered only where it is alleged and demonstrated that the denial was based on error in law or fact and that evidence of the error is found in the record of the proceedings.

(c) If the Secretary fails to take action on the request for reconsideration within 30 days, the request is deemed denied, and the petitioner may seek

such judicial review as may be appropriate and available.

(d) A petitioner has not exhausted other administrative remedies until a request for reconsideration has been filed and acted upon or deemed denied.

§ 431.430 Finality of decision.

(a) A decision to prescribe a rule that a State energy conservation standard or other requirement not be preempted is final on the date the rule is issued, *i.e.*, signed by the Secretary. A decision to prescribe such a rule has no effect on other regulations of covered equipment of any other State.

(b) A decision to prescribe a rule withdrawing a rule exempting a State standard or other requirement is final on the date the rule is issued, *i.e.*, signed by the Secretary. A decision to deny such a petition is final on the day a denial of a request for reconsideration is issued, *i.e.*, signed by the Secretary.

Subpart X—Small Electric Motors

SOURCE: 74 FR 32072, July 7, 2009, unless otherwise noted.

§ 431.441 Purpose and scope.

This subpart contains definitions, test procedures, and energy conservation requirements for small electric motors, pursuant to Part A–1 of Title III of the Energy Policy and Conservation Act, as amended, 42 U.S.C. 6311–6317. This subpart does not cover ''electric motors,'' which are addressed in subpart B of this part.

[77 FR 26638, May 4, 2012]

§ 431.442 Definitions.

The following definitions are applicable to this subpart:

Alternative efficiency determination method, or AEDM, means, with respect to a small electric motor, a method of calculating the total power loss and average full-load efficiency.

Average full-load efficiency means the arithmetic mean of the full-load efficiencies of a population of small electric motors of duplicate design, where the full-load efficiency of each motor in the population is the ratio (expressed as a percentage) of the motor's useful power output to its total power input when the motor is operated at its full rated load, rated voltage, and rated frequency.

Basic model means, with respect to a small electric motor, all units of a given type of small electric motor (or class thereof) manufactured by a single manufacturer, and which have the same rating, have electrical characteristics that are essentially identical, and do not have any differing physical or functional characteristics that affect energy consumption or efficiency. For the purpose of this definition, ''rating'' means a combination of the small electric motor's group (i.e., capacitor-start, capacitor-run; capacitor-start, induction-run; or polyphase), horsepower rating (or standard kilowatt equivalent), and number of poles with respect to which § 431.446 prescribes nominal full load efficiency standards.

CSA means Canadian Standards Association.

DOE or *the Department* means the U.S. Department of Energy.

EPCA means the Energy Policy and Conservation Act, as amended, 42 U.S.C. 6291–6317.

IEC means International Electrotechnical Commission.

IEEE means Institute of Electrical and Electronics Engineers, Inc.

NEMA means National Electrical Manufacturers Association.

Small electric motor means a NEMA general purpose alternating current single-speed induction motor, built in a two-digit frame number series in accordance with NEMA Standards Publication MG1–1987, including IEC metric equivalent motors.

[74 FR 32072, July 7, 2009, as amended at 77 FR 26638, May 4, 2012]

TEST PROCEDURES

§ 431.443 Materials incorporated by reference.

(a) *General*. The Department incorporates by reference the following standards into subpart X of part 431. The Director of the Federal Register has approved the material listed in paragraph (b) of this section for incorporation by reference in accordance with 5 U.S.C. 552(a) and 1 CFR part 51.

Any subsequent amendment to a standard by the standard-setting organization will not affect the DOE test procedures unless and until the DOE amends its test procedures. DOE incorporates the material as it exists on the date of the approval and a notice of any change in the material will be published in the FEDERAL REGISTER. All approved material is available for inspection at the National Archives and Records Administration (NARA). For information on the availability of this material at NARA, call 202–741–6030, or go to: *http://www.archives.gov/federal_register/code_of_federal_regulations/ibr_locations.html*. Also, this material is available for inspection at U.S. Department of Energy, Office of Energy Efficiency and Renewable Energy, Building Technologies Program, Sixth Floor, 950 L'Enfant Plaza, SW., Washington, DC 20024, (202) 586–2945, or go to *http://www1.eere.energy.gov/buildings/appliance_standards/*. Standards can be obtained from the sources below.

(b) *CAN/CSA*. Canadian Standards Association, Sales Department, 5060 Spectrum Way, Suite 100, Mississauga, Ontario, L4W 5N6, Canada, 1–800–463–6727, or go to *http://www.shopcsa.ca/onlinestore/welcome.asp*.

(1) CSA C747–09 (''CSA C747''), Energy efficiency test methods for small motors, October 2009, IBR approved for §§ 431.444; 431.447.

(2) CSA C390–10, Test methods, marking requirements, and energy efficiency levels for three-phase induction motors, March 2010, IBR approved for §§ 431.444; 431.447.

(c) *IEEE*. Institute of Electrical and Electronics Engineers, Inc., 445 Hoes Lane, P.O. Box 1331, Piscataway, NJ 08855–1331, 1–800–678–IEEE (4333), or go to *http://www.ieee.org/web/publications/home/index.html*.

(1) IEEE Std 112–2004, Test Procedure for Polyphase Induction Motors and Generators, approved February 9, 2004, IBR approved as follows:

(i) Section 6.3, Efficiency Test Method A, Input-Output, IBR approved for §§ 431.444; 431.447;

(ii) Section 6.4, Efficiency Test Method B, Input-Output with Loss Segregation, IBR approved for §§ 431.444; 431.447.

(2) IEEE Std 114–2010, Test Procedure for Single-Phase Induction Motors, approved September 30, 2010, IBR approved for §§ 431.444; 431.447.

[74 FR 32072, July 7, 2009, as amended at 77 FR 26638, May 4, 2012]

§ 431.444 Test procedures for the measurement of energy efficiency.

(a) *Scope*. Pursuant to section 346(b)(1) of EPCA, this section provides the test procedures for measuring, pursuant to EPCA, the efficiency of small electric motors pursuant to EPCA. (42 U.S.C. 6317(b)(1)) For purposes of this part 431 and EPCA, the test procedures for measuring the efficiency of small electric motors shall be the test procedures specified in § 431.444(b).

(b) *Testing and Calculations*. Determine the energy efficiency and losses by using one of the following test methods:

(1) Single-phase small electric motors: Either IEEE Std 114–2010 or CSA C747 (incorporated by reference, see § 431.443);

(2) Polyphase small electric motors less than or equal to 1 horsepower (0.75 kW): Either IEEE Std 112–2004 Test Method A or CSA C747 (incorporated by reference, see § 431.443); or

(3) Polyphase small electric motors greater than 1 horsepower (0.75 kW): Either IEEE Std 112–2004 Test Method B or CSA C390–10 (incorporated by reference, see § 431.443).

[74 FR 32072, July 7, 2009, as amended at 77 FR 26638, May 4, 2012]

§ 431.445 Determination of small electric motor efficiency.

(a) *Scope*. When a party determines the energy efficiency of a small electric motor to comply with an obligation imposed on it by or pursuant to Part A–1 of Title III of EPCA, 42 U.S.C. 6311–6317, this section applies.

(b) *Provisions applicable to all small electric motors*—(1) *General requirements*. The average full-load efficiency of each basic model of small electric motor must be determined either by testing in accordance with § 431.444 of this subpart, or by application of an alternative efficiency determination method (AEDM) that meets the requirements of paragraphs (a)(2) and (3) of this section, provided, however, that an

AEDM may be used to determine the average full-load efficiency of one or more of a manufacturer's basic models only if the average full-load efficiency of at least five of its other basic models is determined through testing.

(2) *Alternative efficiency determination method.* An AEDM applied to a basic model must be:

(i) Derived from a mathematical model that represents the mechanical and electrical characteristics of that basic model, and

(ii) Based on engineering or statistical analysis, computer simulation or modeling, or other analytic evaluation of performance data.

(3) *Substantiation of an alternative efficiency determination method.* Before an AEDM is used, its accuracy and reliability must be substantiated as follows:

(i) The AEDM must be applied to at least five basic models that have been tested in accordance with § 431.444; and

(ii) The predicted total power loss for each such basic model, calculated by applying the AEDM, must be within plus or minus 10 percent of the mean total power loss determined from the testing of that basic model.

(4) *Subsequent verification of an AEDM.* (i) Each manufacturer that has used an AEDM under this section shall have available for inspection by the Department of Energy records showing the method or methods used; the mathematical model, the engineering or statistical analysis, computer simulation or modeling, and other analytic evaluation of performance data on which the AEDM is based; complete test data, product information, and related information that the manufacturer has generated or acquired pursuant to paragraph (a)(3) of this section; and the calculations used to determine the efficiency and total power losses of each basic model to which the AEDM was applied.

(ii) If requested by the Department, the manufacturer shall conduct simulations to predict the performance of particular basic models of small electric motors specified by the Department, analyses of previous simulations conducted by the manufacturer, sample testing of basic models selected by the Department, or a combination of the foregoing.

(5) *Use of a certification program.* (i) A manufacturer may use a certification program, that DOE has classified as nationally recognized under § 431.447, to certify the average full-load efficiency of a basic model of small electric motor, and issue a certificate of conformity for the small electric motor.

(ii) For each basic model for which a certification program is not used as described in paragraph (b)(5)(i) of this section, any testing of a motor to determine its energy efficiency must be carried out in accordance with paragraph (c) of this section.

(c) *Additional testing requirements applicable when a certification program is not used*—(1) *Selection of basic models for testing.* (i) Basic models must be selected for testing in accordance with the following criteria:

(A) Two of the basic models must be among the five basic models that have the highest unit volumes of production by the manufacturer in the prior year, or during the prior 12 calendar month period beginning in 2015, whichever is later, and comply with the standards set forth in § 431.446;

(B) The basic models should be of different horsepowers without duplication;

(C) At least one basic model should be selected from each of the frame number series for which the manufacturer is seeking compliance; and

(D) Each basic model should have the lowest average full-load efficiency among the basic models with the same rating (''rating'' as used here has the same meaning as it has in the definition of ''basic model'').

(ii) In any instance where it is impossible for a manufacturer to select basic models for testing in accordance with all of these criteria, the criteria shall be given priority in the order in which they are listed. Within the limits imposed by the criteria, basic models shall be selected randomly.

(2) *Selection of units for testing within a basic model.* For each basic model selected for testing,[1] a sample of units

[1] Components of similar design may be substituted without requiring additional testing

shall be selected at random and tested. The sample shall be comprised of production units of the basic model, or units that are representative of such production units. The sample size shall be no fewer than five units, except when fewer than five units of a basic model would be produced over a reasonable period of time (approximately 180 days). In such cases, each unit produced shall be tested.

(3) *Applying results of testing*. When applying the test results to determine whether a motor complies with the required average efficiency level:

The average full-load efficiency of the sample, $\bar{X}$ which is defined by

$$\overline{X} = \frac{1}{n}\sum_{i=1}^{n} X_i$$

where X_i is the measured full-load efficiency of unit i and n is the number of units tested, shall satisfy the condition:

$$\overline{X} \geq \frac{100}{1 + 1.05\left(\frac{100}{RE} - 1\right)}$$

where RE is the required average full-load efficiency.

[74 FR 32072, July 7, 2009, as amended at 77 FR 26638, May 4, 2012]

ENERGY CONSERVATION STANDARDS

§ 431.446 Small electric motors energy conservation standards and their effective dates.

(a) Each small electric motor manufactured (alone or as a component of another piece of non-covered equipment) after March 9, 2015, or in the case of a small electric motor which requires listing or certification by a nationally recognized safety testing laboratory, after March 9, 2017, shall have an average full load efficiency of not less than the following:

Motor horsepower/standard kilowatt equivalent	Average full load efficiency		
	Polyphase		
	Open motors (number of poles)		
	6	4	2
0.25/0.18	67.5	69.5	65.6
0.33/0.25	71.4	73.4	69.5
0.5/0.37	75.3	78.2	73.4
0.75/0.55	81.7	81.1	76.8
1/0.75	82.5	83.5	77.0
1.5/1.1	83.8	86.5	84.0
2/1.5	N/A	86.5	85.5
3/2.2	N/A	86.9	85.5

Motor horsepower/standard kilowatt equivalent	Average full load efficiency		
	Capacitor-start capacitor-run and capacitor-start induction-run		
	Open motors (number of poles)		
	6	4	2
0.25/0.18	62.2	68.5	66.6
0.33/0.25	66.6	72.4	70.5
0.5/0.37	76.2	76.2	72.4
0.75/0.55	80.2	81.8	76.2
1/0.75	81.1	82.6	80.4
1.5/1.1	N/A	83.8	81.5
2/1.5	N/A	84.5	82.9
3/2.2	N/A	N/A	84.1

(b) For purposes of determining the required minimum average full load efficiency of an electric motor that has a horsepower or kilowatt rating between two horsepower or two kilowatt ratings listed in any table of efficiency standards in paragraph (a) of this section, each such motor shall be deemed to have a listed horsepower or kilowatt rating, determined as follows:

(1) A horsepower at or above the midpoint between the two consecutive horsepower ratings shall be rounded up to the higher of the two horsepower ratings;

(2) A horsepower below the midpoint between the two consecutive horsepower ratings shall be rounded down to the lower of the two horsepower ratings; or

(3) A kilowatt rating shall be directly converted from kilowatts to horsepower using the formula 1 kilowatt = (1/0.746) hp, without calculating beyond three significant decimal places, and the resulting horsepower shall be rounded in accordance with paragraphs (b)(1) or (b)(2) of this section, whichever applies.

[75 FR 10947, Mar. 9, 2010; 75 FR 17036, Apr. 5, 2010]

if the represented measures of energy consumption continue to satisfy the applicable sampling provision.

§ 431.447 Department of Energy recognition of nationally recognized certification programs.

(a) *Petition.* For a certification program to be classified by the Department of Energy as being nationally recognized in the United States (''nationally recognized''), the organization operating the program must submit a petition to the Department requesting such classification, in accordance with paragraph (c) of this section and § 431.448. The petition must demonstrate that the program meets the criteria in paragraph (b) of this section.

(b) *Evaluation criteria.* For a certification program to be classified by the Department as nationally recognized, it must meet the following criteria:

(1) It must have satisfactory standards and procedures for conducting and administering a certification system, including periodic follow up activities to assure that basic models of small electric motors continue to conform to the efficiency levels for which they were certified, and for granting a certificate of conformity.

(2) It must be independent of small electric motor manufacturers, importers, distributors, private labelers or vendors. It cannot be affiliated with, have financial ties with, be controlled by, or be under common control with any such entity.

(3) It must be qualified to operate a certification system in a highly competent manner.

(4) It must be expert in the content and application of the test procedures and methodologies in IEEE Std 112–2004 Test Methods A and B, IEEE Std 114–2010, CSA C390–10, and CSA C747 (incorporated by reference, see § 431.443) or similar procedures and methodologies for determining the energy efficiency of small electric motors. It must have satisfactory criteria and procedures for the selection and sampling of electric motors tested for energy efficiency.

(c) *Petition format.* Each petition requesting classification as a nationally recognized certification program must contain a narrative statement as to why the program meets the criteria listed in paragraph (b) of this section, must be signed on behalf of the organization operating the program by an authorized representative, and must be accompanied by documentation that supports the narrative statement. The following provides additional guidance as to the specific criteria:

(1) *Standards and procedures.* A copy of the standards and procedures for operating a certification system and for granting a certificate of conformity should accompany the petition.

(2) *Independent status.* The petitioning organization should identify and describe any relationship, direct or indirect, that it or the certification program has with an electric motor manufacturer, importer, distributor, private labeler, vendor, trade association or other such entity, as well as any other relationship it believes might appear to create a conflict of interest for the certification program in operating a certification system for determining the compliance of small electric motors with the applicable energy efficiency standards. It should explain why it believes such relationship would not compromise its independence in operating a certification program.

(3) *Qualifications to operate a certification system.* Experience in operating a certification system should be discussed and substantiated by supporting documents. Of particular relevance would be documentary evidence that establishes experience in the application of guidelines contained in the ISO/IEC Guide 65, General requirements for bodies operating product certification systems, ISO/IEC Guide 27, Guidelines for corrective action to be taken by a certification body in the event of either misapplication of its mark of conformity to a product, or products which bear the mark of the certification body being found to subject persons or property to risk, and ISO/IEC Guide 28, General rules for a model third-party certification system for products, as well as experience in overseeing compliance with the guidelines contained in the ISO/IEC Guide 25, General requirements for the competence of calibration and testing laboratories.

(4) *Expertise in small electric motor test procedures.* The petition should set forth the program's experience with the test procedures and methodologies

in IEEE Std 112–2004 Test Methods A and B, IEEE Std 114–2010, CSA C390–10, and CSA C747– (incorporated by reference, see §431.443) and with similar procedures and methodologies. This part of the petition should include items such as, but not limited to, a description of prior projects and qualifications of staff members. Of particular relevance would be documentary evidence that establishes experience in applying guidelines contained in the ISO/IEC Guide 25, General Requirements for the Competence of Calibration and Testing Laboratories to energy efficiency testing for electric motors.

(5) The ISO/IEC Guides referenced in paragraphs (c)(3) and (c)(4) of this section are not incorporated by reference, but are for information and guidance only. International Organization for Standardization (ISO), 1, ch. de la Voie-Creuse, CP 56, CH– 1211 Geneva 20, Switzerland/International Electrotechnical Commission, 3, rue de Varembé, P.O. Box 131, CH–1211 Geneva 20, Switzerland.

(d) *Disposition*. The Department will evaluate the petition in accordance with §431.448, and will determine whether the applicant meets the criteria in paragraph (b) of this section for classification as a nationally recognized certification program.

[77 FR 26639, May 4, 2012]

§431.448 Procedures for recognition and withdrawal of recognition of certification programs.

(a) *Filing of petition*. Any petition submitted to the Department pursuant to §431.447(a), shall be entitled ''Petition for Recognition'' (''Petition'') and must be submitted, in triplicate to the Assistant Secretary for Energy Efficiency and Renewable Energy, U.S. Department of Energy, Forrestal Building, 1000 Independence Avenue SW., Washington, DC 20585–0121. In accordance with the provisions set forth in 10 CFR 1004.11, any request for confidential treatment of any information contained in such a Petition or in supporting documentation must be accompanied by a copy of the Petition or supporting documentation from which the information claimed to be confidential has been deleted.

(b) *Public notice and solicitation of comments*. DOE shall publish in the FEDERAL REGISTER the Petition from which confidential information, as determined by DOE, has been deleted in accordance with 10 CFR 1004.11 and shall solicit comments, data and information on whether the Petition should be granted. The Department shall also make available for inspection and copying the Petition's supporting documentation from which confidential information, as determined by DOE, has been deleted in accordance with 10 CFR 1004.11. Any person submitting written comments to DOE with respect to a Petition shall also send a copy of such comments to the petitioner.

(c) *Responsive statement by the petitioner*. A petitioner may, within 10 working days of receipt of a copy of any comments submitted in accordance with paragraph (b) of this section, respond to such comments in a written statement submitted to the Assistant Secretary for Energy Efficiency and Renewable Energy. A petitioner may address more than one set of comments in a single responsive statement.

(d) *Public announcement of interim determination and solicitation of comments*. The Assistant Secretary for Energy Efficiency and Renewable Energy shall issue an interim determination on the Petition as soon as is practicable following receipt and review of the Petition and other applicable documents, including, but not limited to, comments and responses to comments. The petitioner shall be notified in writing of the interim determination. DOE shall also publish in the FEDERAL REGISTER the interim determination and shall solicit comments, data and information with respect to that interim determination. Written comments and responsive statements may be submitted as provided in paragraphs (b) and (c) of this section.

(e) *Public announcement of final determination*. The Assistant Secretary for Energy Efficiency and Renewable Energy shall, as soon as practicable, following receipt and review of comments and responsive statements on the interim determination publish in the FEDERAL REGISTER a notice of final determination on the Petition.

(f) *Additional information*. The Department may, at any time during the recognition process, request additional relevant information or conduct an investigation concerning the Petition. The Department's determination on a Petition may be based solely on the Petition and supporting documents, or may also be based on such additional information as the Department deems appropriate.

(g) *Withdrawal of recognition*—(1) *Withdrawal by the Department*. If the Department believes that a certification program that has been recognized under § 431.447 is failing to meet the criteria of paragraph (b) of the section under which it is recognized, the Department will so advise such entity and request that it take appropriate corrective action. The Department will give the entity an opportunity to respond. If after receiving such response, or no response, the Department believes satisfactory corrective action has not been made, the Department will withdraw its recognition from that entity.

(2) *Voluntary withdrawal*. A certification program may withdraw itself from recognition by the Department by advising the Department in writing of such withdrawal. It must also advise those that use it (for a certification organization, the manufacturers) of such withdrawal.

(3) *Notice of withdrawal of recognition*. The Department will publish in the FEDERAL REGISTER a notice of any withdrawal of recognition that occurs pursuant to this paragraph (g).

[77 FR 26639, May 4, 2012]

PART 433—ENERGY EFFICIENCY STANDARDS FOR NEW FEDERAL COMMERCIAL AND MULTI-FAMILY HIGH-RISE RESIDENTIAL BUILDINGS

Sec.

433.1 Purpose and scope.
433.2 Definitions.
433.3 Materials incorporated by reference.
433.4 Energy efficiency performance standard.
433.5 Performance level determination.
433.6 Sustainable principles for siting, design and construction. [Reserved]
433.7 Water used to achieve energy efficiency. [Reserved]
433.8 Life-cycle costing.

AUTHORITY: 42 U.S.C. 6831–6832, 6834–6835; 42 U.S.C. 7101 *et seq*.

SOURCE: 71 FR 70281, Dec. 4, 2006, unless otherwise noted.

§ 433.1 Purpose and scope.

This part establishes an energy efficiency performance standard for the new Federal commercial and multi-family high-rise buildings, for which design for construction began on or after January 3, 2007, as required by section 305(a) of the Energy Conservation and Production Act, as amended (42 U.S.C. 6834(a)).

§ 433.2 Definitions.

For purposes of this part, the following terms, phrases and words are defined as follows:

ANSI means the American National Standards Institute.

ASHRAE means the American Society of Heating, Refrigerating and Air-Conditioning Engineers.

ASHRAE Baseline Building 2004 means a building that is otherwise identical to the proposed building but is designed to meet, but not exceed, the energy efficiency specifications in ANSI/ASHRAE/IESNA Standard 90.1–2004, Energy Standard for Buildings Except Low-Rise Residential Buildings, January 2004 (incorporated by reference, see § 433.3).

ASHRAE Baseline Building 2007 means a building that is otherwise identical to the proposed building but is designed to meet, but not exceed, the energy efficiency specifications in ANSI/ASHRAE/IESNA Standard 90.1–2007, Energy Standard for Buildings Except Low-Rise Residential Buildings, December 2007 (incorporated by reference, see § 433.3).

ASHRAE Baseline Building 2010 means a building that is otherwise identical to the proposed building but is designed to meet, but not exceed, the energy efficiency specifications in ANSI/ASHRAE/IESNA Standard 90.1–2010, Energy Standard for Buildings Except Low-Rise Residential Buildings, 2010 (incorporated by reference, see § 433.3).

Commercial and multi-family high-rise residential building means all buildings

other than low-rise residential buildings.

Design for construction means the stage when the energy efficiency and sustainability details (such as insulation levels, HVAC systems, water-using systems, etc.) are either explicitly determined or implicitly included in a project cost specification.

DOE means the U.S. Department of Energy.

Federal agency means any department, agency, corporation, or other entity or instrumentality of the executive branch of the Federal Government, including the United States Postal Service, the Federal National Mortgage Association, and the Federal Home Loan Mortgage Corporation.

IESNA means Illuminating Engineering Society of North America.

Life-cycle cost means the total cost related to energy conservation measures of owning, operating and maintaining a building over its useful life as determined in accordance with 10 CFR part 436.

Life-cycle cost-effective means that the proposed building has a lower life-cycle cost than the life-cycle costs of the baseline building, as described by 10 CFR 436.19, or has a positive estimated net savings, as described by 10 CFR 436.20; or has a savings-to-investment ratio estimated to be greater than one, as described by 10 CFR 436.21; or has an adjusted internal rate of return, as described by 10 CFR 436.22, that is estimated to be greater than the discount rate as listed in OMB Circular Number A–94 (Guidelines and Discount Rates for Benefit-Cost Analysis of Federal Programs.''

Low-rise residential building means any building three stories or less in height above grade that includes sleeping accommodations where the occupants are primarily permanent in nature (30 days or more).

New Federal building means any building to be constructed on a site that previously did not have a building or a complete replacement of an existing building from the foundation up, by, or for the use of, any Federal agency which is not legally subject to State or local building codes or similar requirements.

Process load means the load on a building resulting from energy consumed in support of a manufacturing, industrial, or commercial process. Process loads do not include energy consumed maintaining comfort and amenities for the occupants of the building (including space conditioning for human comfort).

Proposed building means the building design of a new Federal commercial and multi-family high-rise building proposed for construction.

Receptacle load means the load on a building resulting from energy consumed by any equipment plugged into electrical outlets.

[71 FR 70281, Dec. 4, 2006, as amended at 72 FR 72570, Dec. 21, 2007; 76 FR 49284, Aug. 10, 2011; 78 FR 40953, July 9, 2013]

§ 433.3 Materials incorporated by reference.

(a) *General.* The Department of Energy incorporates by reference the energy performance standards listed in paragraph (b) of this section into 10 CFR part 433. The Director of the Federal Register has approved the material listed in paragraph (b) of this section for incorporation by reference in accordance with 5 U.S.C. 552(a) and 1 CFR part 51. Any subsequent amendment to a standard by the standard-setting organization will not affect DOE regulations unless and until DOE amends its energy performance standards. Material is incorporated as it exists on the date of the approval, and a notice of any change in the material will be published in the FEDERAL REGISTER. All approved material is available for inspection at the U.S. Department of Energy, Office of Energy Efficiency and Renewable Energy, Building Technologies Program, Sixth Floor, 950 L'Enfant Plaza, SW., Washington, DC 20024, (202) 586–2945. Also, this material is available for inspection at the National Archives and Records Administration (NARA). For information on the availability of this material at NARA, call 202–741–6030, or go to: *http://www.archives.gov/federal_register/code_of_federal_regulations/ibr_locations.html.*

(b) *ASHRAE.* American Society of Heating Refrigerating and Air-Conditioning Engineers, Inc., 1791 Tullie Circle, NE. Atlanta, GA 30329, (404) 636–8400; or go to, *http://www.ashrae.org//.*

(1) ANSI/ASHRAE/IESNA 90.1–2004, (''ASHRAE 90.1–2004''), Energy Standard for Buildings Except Low-Rise Residential Buildings, January 2004, ISSN 1041–2336, IBR approved for §§ 433.2, 433.4, 433.5;

(2) ANSI/ASHRAE/IESNA Standard 90.1–2007, (''ASHRAE 90.1–2007''), Energy Standard for Buildings Except Low-Rise Residential Buildings, 2007, ISSN 1041–2336, IBR approved for §§ 433.2, 433.4, 433.5.

(3) ANSI/ASHRAE/IESNA 90.1–2010, (''ASHRAE 90.1–2010''), Energy Standard for Buildings Except Low-Rise Residential Buildings, I–P Edition, Copyright 2010, IBR approved for §§ 433.2, 433.4, 433.5.

[76 FR 49284, Aug. 10, 2011, as amended at 78 FR 40953, July 9, 2013]

§ 433.4 Energy efficiency performance standard.

(a) (1) All Federal agencies shall design new Federal buildings that are commercial and multi-family high-rise residential buildings, for which design for construction began on or after January 3, 2007, but before August 10, 2012, to:

(i) Meet ASHRAE 90.1–2004, (incorporated by reference, see § 433.3); and

(ii) If life-cycle cost-effective, achieve energy consumption levels, calculated consistent with paragraph (b) of this section, that are at least 30 percent below the levels of the ASHRAE Baseline Building 2004.

(2) All Federal agencies shall design new Federal buildings that are commercial and multi-family high-rise residential buildings, for which design for construction began on or after August 10, 2012, but before July 9, 2014, to:

(i) Meet ASHRAE 90.1–2007, (incorporated by reference, see § 433.3); and

(ii) If life-cycle cost-effective, achieve energy consumption levels, calculated consistent with paragraph (b) of this section, that are at least 30 percent below the levels of the ASHRAE Baseline Building 2007.

(3) All Federal agencies shall design new Federal buildings that are commercial and multi-family high-rise residential buildings, for which design for construction began on or after July 9, 2014, to:

(i) Meet ASHRAE 90.1–2010, (incorporated by reference, see § 433.3); and

(ii) If life-cycle cost-effective, achieve energy consumption levels, calculated consistent with paragraph (b) of this section, that are at least 30 percent below the levels of the ASHRAE Baseline Building 2010.

(b) Energy consumption for the purposes of calculating the 30 percent savings shall include space heating, space cooling, ventilation, service water heating, lighting and all other energy consuming systems normally specified as part of the building design except for receptacle and process loads.

(c) If a 30 percent reduction is not life-cycle cost-effective, the design of the proposed building shall be modified so as to achieve an energy consumption level at or better than the maximum level of energy efficiency that is life-cycle cost-effective, but at a minimum complies with paragraph (a) of this section.

[71 FR 70281, Dec. 4, 2006, as amended at 72 FR 72570, Dec. 21, 2007; 76 FR 49284, Aug. 10, 2011; 78 FR 40953, July 9, 2013]

§ 433.5 Performance level determination.

(a)(1) For Federal buildings for which design for construction began on or after January 3, 2007, but before August 10, 2012, each Federal agency shall determine energy consumption levels for both the ASHRAE Baseline Building 2004 and proposed building by using the Performance Rating Method found in appendix G of ASHRAE 90.1–2004 (incorporated by reference, see § 433.3), except the formula for calculating the Performance Rating in paragraph G1.2 shall read as follows:

Percentage improvement = 100 × ((Baseline building consumption − Receptacle and process loads) − (Proposed building consumption − Receptacle and process loads)) / (Baseline building consumption − Receptacle and process loads) (which simplifies as follows):

Percentage improvement = 100 × (Baseline building consumption − Proposed building consumption) /

(Baseline building consumption − Receptacle and process loads).

(2) For Federal buildings for which design for construction began on or after August 10, 2012, but before July 9, 2014, each Federal agency shall determine energy consumption levels for both the ASHRAE Baseline Building 2007 and proposed building by using the Performance Rating Method found in Appendix G of ASHRAE 90.1–2007 (incorporated by reference, see §433.3), except the formula for calculating the Performance Rating in paragraph G1.2 shall read as follows:

Percentage improvement = 100 × ((Baseline building consumption − Receptacle and process loads) − (Proposed building consumption − Receptacle and process loads))/(Baseline building consumption − Receptacle and process loads) (which simplifies as follows):

Percentage improvement = 100 × (Baseline building consumption − Proposed building consumption)/(Baseline building consumption − Receptacle and process loads).

(3) For Federal buildings for which design for construction began on or after July 9, 2014, each Federal agency shall determine energy consumption levels for both the ASHRAE Baseline Building 2010 and proposed building by using the Performance Rating Method found in Appendix G of ASHRAE 90.1–2010 (incorporated by reference, see §433.3), except the formula for calculating the Performance Rating in paragraph G1.2 shall read as follows:

Percentage improvement = 100 × ((Baseline building consumption − Receptacle and process loads) − (Proposed building consumption − Receptacle and process loads))/(Baseline building consumption − Receptacle and process loads) (which simplifies as follows):

Percentage improvement = 100 × (Baseline building consumption − Proposed building consumption)/(Baseline building consumption − Receptacle and process loads).

(b) Each Federal agency shall consider laboratory fume hoods and kitchen ventilation systems as part of the ASHRAE-covered HVAC loads subject to the 30 percent savings requirements, rather than as process loads.

[71 FR 70281, Dec. 4, 2006, as amended at 76 FR 49284, Aug. 10, 2011; 78 FR 40953, July 9, 2013]

§433.6 Sustainable principles for siting, design and construction. [Reserved]

§433.7 Water used to achieve energy efficiency. [Reserved]

§433.8 Life-cycle costing.

Each Federal agency shall determine life-cycle cost-effectiveness by using the procedures set out in subpart A of part 436. A Federal agency may choose to use any of four methods, including lower life-cycle costs, positive net savings, savings-to-investment ratio that is estimated to be greater than one, and an adjusted internal rate of return that is estimated to be greater than the discount rate as listed in OMB Circular Number A–94 ''Guidelines and Discount Rates for Benefit-Cost Analysis of Federal Programs.''

PART 434—ENERGY CODE FOR NEW FEDERAL COMMERCIAL AND MULTI-FAMILY HIGH RISE RESIDENTIAL BUILDINGS

Sec.

434.99 Explanation of numbering system for codes.

Subpart A—Administration and Enforcement—General

434.100 Purpose.
434.101 Scope.
434.102 Compliance.
434.103 Referenced standards (RS).
434.105 Materials and equipment.

Subpart B—Definitions

434.201 Definitions.

Subpart C—Design Conditions

434.301 Design criteria.

Subpart D—Building Design Requirements—Electric Systems and Equipment

434.401 Electrical power and lighting systems.
434.402 Building envelope assemblies and materials.

434.403 Building mechanical systems and equipment.
434.404 Building service systems and equipment.

Subpart E—Building Energy Cost Compliance Alternative

434.501 General.
434.502 Determination of the annual energy cost budget.
434.503 Prototype building procedure.
434.504 Use of the prototype building to determine the energy cost budget.
434.505 Reference building method.
434.506 Use of the reference building to determine the energy cost budget.
434.507 Calculation procedure and simulation tool.
434.508 Determination of the design energy consumption and design energy cost.
434.509 Compliance.
434.510 Standard calculation procedure.
434.511 Orientation and shape.
434.512 Internal loads.
434.513 Occupancy.
434.514 Lighting.
434.515 Receptacles.
434.516 Building exterior envelope.
434.517 HVAC systems and equipment.
434.518 Service water heating.
434.519 Controls.
434.520 Speculative buildings.
434.521 The simulation tool.

Subpart F—Building Energy Compliance Alternative

434.601 General.
434.602 Determination of the annual energy budget.
434.603 Determination of the design energy use.
434.604 Compliance.
434.605 Standard calculation procedure.
434.606 Simulation tool.
434.607 Life cycle cost analysis criteria.

Subpart G—Reference Standards

434.701 General.

AUTHORITY: 42 U.S.C. 6831–6832, 6834–6836; 42 U.S.C. 8253–54; 42 U.S.C. 7101, *et seq*.

SOURCE: 65 FR 60012, Oct. 6, 2000, unless otherwise noted.

§ 434.99 Explanation of numbering system for codes.

(a) For purposes of this part, a derivative of two different numbering systems will be used.

(1) For the purpose of designating a section, the system employed in the Code of Federal Regulations (CFR) will be employed. The number ''434'' which signifies part 434 in chapter II of Title 10, Code of Federal Regulations, is used as a prefix for all section headings. The suffix is a two or three digit section number. For example the lighting section of the standards is designated § 434.401.

(2) Within each section, a numbering system common to many national voluntary consensus standards is used. A decimal system is used to denote paragraphs and subparagraphs within a section. For example, in § 434.401, ''401.2.1'' refers to subsection 401, paragraph 2, subparagraph 1.

(b) The hybrid numbering system is used for two purposes:

(1) The use of the Code of Federal Regulations' numbering system allows the researcher using the CFR easy access to the standards.

(2) The use of the second system allows the builder, designer, architect or engineer easy access because they are familiar to this system numbering. This system was chosen because of its commonality among the building industry.

Subpart A—Administration and Enforcement—General

§ 434.100 Purpose.

The provisions of this part provide minimum standards for energy efficiency for the design of new Federal commercial and multi-family high rise residential buildings, for which design for construction began before January 3, 2007. The performance standards are designed to achieve the maximum practicable improvements in energy efficiency and increases in the use of non-depletable sources of energy. This rule is based upon the ASHRAE/IESNA Standard 90.1–1989 and addenda b, c, d, e, f, g, and i. (This document is available from the American Society of Heating, Refrigerating and Air-Conditioning Engineers, Inc., 1791 Tullie Circle NE, Atlanta, GA.) It is not incorporated by reference in this document, but is mentioned for informational purposes only.

[71 FR 70283, Dec. 4, 2006]

§ 434.101 Scope.

101.1 This part provides design requirements for the building envelope, electrical distribution systems and equipment for electric power, lighting, heating, ventilating, air conditioning, service water heating and energy management. It applies to new Federal multi-family high rise residential buildings and new Federal commercial buildings, for which design for construction began before January 3, 2007.

101.1.1 (a) Except as provided by section 101.2, the provisions of this part apply if an agency is constructing:

(1) A building that has never been in service;

(2) An addition for which design for construction began before January 3, 2007, that adds new space with provision for a heating or cooling system, or both, or for a hot water system; or

(3) A substantial renovation of a building for which design for construction began before January 3, 2007, involving replacement of a heating or cooling system, or both, or hot water system, that is either in service or has been in service.

101.2 The provisions of this part do not apply to:

101.2.1 Buildings, or portions thereof separated from the remainder of the building, that have a peak energy usage for space conditioning, service water heating, and lighting of less than 3.5 Btu/(h•ft^2 of gross floor area.

101.2.2 Buildings of less than 100 square feet of gross floor area.

101.2.3 Heating, cooling, ventilating, or service hot water requirements for those spaces where processes occur for purposes other than occupant comfort and sanitation, and which impose thermal loads in excess of 5% of the loads that would otherwise be required for occupant comfort and sanitation without the process;

101.2.4 Envelope requirements for those spaces where heating or cooling requirements are excepted in subsection 101.2.3 of this section.

101.2.5 Lighting for tasks not listed or encompassed by areas or activities listed in Tables 401.3.2b, 401.3.2c and 401.3.2d.

101.2.6 Buildings that are composed entirely of spaces listed in subsections 101.2.4 and 101.2.5.

101.2.7 Individual components of a building under renovation, if the building components are not in the scope of a renovation as defined by the agency.

[65 FR 60012, Oct. 6, 2000, as amended at 71 FR 70283, Dec. 4, 2006; 72 FR 72571, Dec. 21, 2007]

§ 434.102 Compliance.

102.1 A covered building must be designed and constructed consistent with the provisions of subpart D of this part.

102.2 Buildings designed and constructed to meet the alternative requirements of subparts E or F of this part shall be deemed to satisfy the requirements of this part. Such designs shall be certified by a registered architect or engineer stating that the estimated energy cost or energy use for the building as designed is no greater than the energy cost or energy use of a prototype building or reference building as determined pursuant to subparts E or F of this part.

§ 434.103 Referenced standards (RS).

103.1 The standards, technical handbooks, papers and regulations listed in § 434.701, shall be considered part of this part to the prescribed extent of such reference. Where differences occur between the provisions of this part and referenced standards, the provisions of this part shall apply. Whenever a reference is made in this part to an RS standard it refers to the standards listed in § 434.701.

§ 434.105 Materials and equipment.

105.1 Building materials and equipment shall be identified in designs in a manner that will allow for a determination of their compliance with the applicable provisions of this part.

Subpart B—Definitions

§ 434.201 Definitions.

For the purposes of this part, the following terms, phrases, and words shall be defined as provided:

Accessible (as applied to equipment): admitting close approach; not guarded by locked doors, elevations, or other effective means. (See also ''readily accessible'')

Annual Fuel Utilization Efficiency (AFUE): the ratio of annual output energy to annual input energy that includes any non-heating season pilot input loss.

Area of the space (A): the horizontal lighted area of a given space measured from the inside of the perimeter walls or partitions, at the height of the working surface.

Automatic: self-acting, operating by its own mechanism when actuated by some impersonal influence, such as a change in current strength, pressure, temperature, or mechanical configuration. (See also''manual'')

Automatic flue damper device: an electrically operated device, in the flue outlet or in the inlet of or upstream of the draft hood of an individual automatically operated gas-fired appliance, which is designed to automatically open the flue outlet during appliance operation and to automatically close off the flue outlet when the appliance is in a standby condition.

Automatic vent damper device: a device intended for installation in the venting system, in the outlet of or downstream of the appliance draft hood, of an individual automatically operated gas-fired appliance, which is designed to automatically open the venting system when the appliance is in operation and to automatically close off the venting system when the appliance is in a standby or shutdown condition.

(1) *Electrically operated:* an automatic vent damper device that employs electrical energy to control the device.

(2) *Thermally actuated:* an automatic vent damper device dependent for operation exclusively upon the direct conversion of the thermal energy of the vent gases into mechanical energy.

Boiler capacity: the rated heat output of the boiler, in Btu/h, at the design inlet and outlet conditions and rated fuel or energy input.

Building: means any structure to be constructed which includes provision for a heating or cooling system, or both, or for a hot water system.

Building code: means a legal instrument which is in effect in a State or unit of general purpose local government, the provisions of which must be adhered to if a building is to be considered to be in conformance with law and suitable for occupancy and use.

Building envelope: the elements of a building that enclose conditioned spaces through which thermal energy may be transferred to or from the exterior or to or from unconditioned spaces.

Check metering: measurement instrumentation for the supplementary monitoring of energy consumption (electric, gas, oil, etc) to isolate the various categories of energy use to permit conservation and control, in addition to the revenue metering furnished by the utility.

Coefficient of performance (COP)—Cooling: the ratio of the rate of heat removal to the rate of energy input, in consistent units, for a complete cooling system or factory assembled equipment, as tested under a nationally recognized standard or designated operating conditions.

Coefficient of performance (COP) heat pump—Heating: the ratio of the rate of heat delivered to the rate of energy input, in consistent units, for a complete heat pump system under designated operating conditions.

Commercial building: a building other than a residential building, including any building developed for industrial or public purposes. Including but not limited to occupancies for assembly, business, education, institutions, food sales and service, merchants, and storage.

Conditioned floor area: the area of the conditioned space measured at floor level from the interior surfaces of the walls.

Conditioned space: a cooled space, heated space, or indirectly conditioned space.

Cooled space: an enclosed space within a building that is cooled by a cooling system whose sensible capacity:

(1) Exceeds 5 Btu/(h·ft^2); or

(2) Is capable of maintaining a space dry bulb temperature of 90 °F or less at design cooling conditions.

Daylight sensing control (DS): a device that automatically regulates the power input to electric lighting near the fenestration to maintain the desired workplace illumination, thus taking advantage of direct or indirect sunlight.

Daylighted space: the space bounded by vertical planes rising from the boundaries of the daylighted area on the floor to the floor or roof above.

Daylighted zone:

(1) Under skylights: the area under each skylight whose horizontal dimension in each direction is equal to the skylight dimension in that direction plus either the floor-to-ceiling height or the dimension to an opaque partition, or one-half the distance to an adjacent skylight or vertical glazing, whichever is least.

(2) At vertical glazing: the area adjacent to vertical glazing that receives daylighting from the glazing. For purposes of this definition and unless more detailed daylighting analysis is provided, the daylighting zone depth is assumed to extend into the space a distance of 15 ft or to the nearest opaque partition, whichever is less. The daylighting zone width is assumed to be the width of the window plus either 2 ft on each side, the distance to an opaque partition, or one half the distance to an adjacent skylight or vertical glazing, whichever is least.

Dead band (dead zone): the range of values within which an input variable that can be varied without initiating any noticeable change in the output variable.

Degree-day, cooling: a unit, based upon temperature difference and time, used in estimating cooling energy consumption. For any one day, when the mean temperature is more than a reference temperature, typically 65 °F, there are as many degree-days as degrees Fahrenheit temperature difference between the mean temperature for the day and the reference temperature. Annual cooling degree-days (CDD) are the sum of the degree-days over a calendar year.

Degree-day, heating: a unit, based upon temperature difference and time, used in estimating heating energy consumption. For any one day, when the mean temperature is less than a reference temperature, typically 65 °F, there are as many degree-days as degrees Fahrenheit temperature difference between the mean temperature for the day and the reference temperature. Annual heating degree days (HDD) are the sum of the degree-days over a calendar year.

Dwelling unit: a single housekeeping unit comprised of one or more rooms providing complete independent living facilities for one or more persons, including permanent provisions for living, sleeping, eating, cooking, and sanitation.

Economizer, air: a ducting arrangement and automatic control system that allows a cooling supply fan system to supply outdoor (outside) air to reduce or eliminate the need for mechanical refrigeration during mild or cold weather.

Economizer, water: a system by which the supply air of a cooling system is cooled directly or indirectly or both by evaporation of water or by other appropriate fluid in order to reduce or eliminate the need for mechanical refrigeration.

Efficiency, HVAC system: the ratio of the useful energy output, at the point of use to the energy input in consistent units, for a designated time period, expressed in percent.

Emergency system (back-up system): a system that exists for the purpose of operating in the event of failure of a primary system.

Emergency use: electrical and lighting systems required to supply power automatically for illumination and equipment in the event of a failure of the normal power supply.

Energy efficiency ratio (EER): the ratio of net equipment cooling capacity in Btu/h to total rate of electric input in watts under designated operating conditions. When consistent units are used, this ratio becomes equal to COP. (See also ''coefficient of performance''.)

Fan system energy demand: the sum of the demand of all fans that are required to operate at design conditions to supply air from the heating or cooling source to the conditioned space(s) and return it back to the source or exhaust it to the outdoors.

Federal Agency: means any department, agency, corporation, or other entity or instrumentality of the executive branch of the Federal Government, including the United States Postal Service, the Federal National Mortgage Association, and the Federal Home Loan Mortgage Corporation.

Federal Building: means any building to be constructed by, or for the use of, any Federal Agency which is not legally subject to State or local building codes or similar requirements.

Fenestration: any light-transmitting section in a building wall or roof. The fenestration includes glazing material (which may be glass or plastic), framing (mullions, muntins, and dividers), external shading devices, internal shading devices, and integral (between glass) shading devices.

Fenestration area: the total area of fenestration measured using the rough opening and including the glass or plastic, sash, and frame. For doors where the glazed vision area is less than 50% of the door area, the fenestration area is glazed vision area. For all other doors, the fenestration area is the door area.

Flue damper: a device, in the flue outlet or in the inlet of or upstream of the draft hood of an individual automatically operated gas-fired appliance, which is designed to automatically open the flue outlet during appliance operation and to automatically close off the flue outlet when the appliance is in a standby condition.

Gross floor area: the sum of the floor areas of the conditioned spaces within the building, including basements, mezzanine and intermediate-floor tiers, and penthouses of headroom height 7.5 ft or greater. It is measured from the exterior faces of exterior walls or from the centerline of walls separating buildings (excluding covered walkways, open roofed-over areas, porches and similar spaces, pipe trenches, exterior terraces or steps, chimneys, roof overhangs, and similar features).

Gross lighted area (GLA): the sum of the total lighted areas of a building measured from the inside of the perimeter walls for each floor of the building.

Heat capacity (HC): the amount of heat necessary to raise the temperature of a given mass 1 °F. Numerically, the mass expressed per unit of wall surface multiplied by the specific heat Btu/(ft^2·°F).

Heat trap: device or piping arrangement that effectively restricts the natural tendency of hot water to rise in vertical pipes during standby periods. Examples are the U-shaped arrangement of elbows or a 360-degree loop of tubing.

Heated space: an enclosed space within a building that is heated by a heating system whose output capacity

(1) Exceeds 10 Btu/(h·ft^2), or

(2) Is capable of maintaining a space dry-bulb temperature of 50 °F or more at design heating conditions.

Heating seasonal performance factor (HSPF): the total heating output of a heat pump during its normal annual usage period for heating, in Btu, divided by the total electric energy input during the same period, in watt-hours.

High rise residential building: hotels, motels, apartments, condominiums, dormitories, barracks, and other residential-type facilities that provide complete housekeeping or transient living quarters and are over three stories in height above grade.

Humidistat: an automatic control device responsive to changes in humidity.

HVAC system: the equipment, distribution network, and terminals that provide either collectively or individually the processes of heating, ventilating, or air conditioning to a building.

Indirectly conditioned space: an enclosed space within the building that is not a heated or cooled space, whose area-weighted heat transfer coefficient to heated or cooled spaces exceeds that to the outdoors or to unconditioned spaces; or through which air from heated or cooled spaces is transferred at a rate exceeding three air changes per hour. (See also ''heated space'', ''cooled space'', and ''unconditioned space''.)

Infiltration: the uncontrolled inward air leakage through cracks and crevices in any building element and around windows and doors of a building.

Integrated part-load value (IPLV): a single-number figure of merit based on part-load EER or COP expressing part-load efficiency for air-conditioning and heat pump equipment on the basis of weighted operation at various load capacities for the equipment.

Lumen maintenance control: a device that senses the illumination level and causes an increase or decrease of illuminance to maintain a preset illumination level.

Manual: action requiring personal intervention for its control. As applied to an electric controller, manual control does not necessarily imply a manual controller but only that personal intervention is necessary. (See automatic.)

Marked rating: the design load operating conditions of a device as shown by the manufacturer on the nameplate or otherwise marked on the device.

Multi-family high rise residential: a residential building containing three or more dwelling units and is designed to be 3 or more stories above grade.

Occupancy sensor: a device that detects the presence or absence of people within an area and causes any combination of lighting, equipment, or appliances to be adjusted accordingly.

Opaque areas: all exposed areas of a building envelope that enclose conditioned space except fenestration areas and building service openings such as vents and grilles.

Orientation: the directional placement of a building on a building site with reference to the building's longest horizontal axis or, if there is no longest horizontal axis, then with reference to the designated main entrance.

Outdoor air: air taken from the exterior of the building that has not been previously circulated through the building. (See ''ventilation air'')

Ozone depletion factor: a relative measure of the potency of chemicals in depleting stratospheric ozone. The ozone depletion factor potential depends upon the chlorine and the bromine content and atmospheric lifetime of the chemical. The depletion factor potential is normalized such that the factor for CFC–11 is set equal to unity and the factors for the other chemicals indicate their potential relative to CFC–11.

Packaged terminal air conditioner (PTAC): a factory-selected wall sleeve and separate unencased combination of heating and cooling components, assemblies, or sections (intended for mounting through the wall to serve a single room or zone). It includes heating capability by hot water, steam, or electricity.

Packaged terminal heat pump: a PTAC capable of using the refrigeration system in a reverse cycle or heat pump mode to provide heat.

Plenum: an enclosure that is part of the air-handling system and is distinguished by having a very low air velocity. A plenum often is formed in part or in total by portions of the building.

Private driveways, walkways, and parking lots: exterior transit areas that are associated with a commercial or residential building and intended for use solely by the employees or tenants and not by the general public.

Process energy: energy consumed in support of a manufacturing, industrial, or commercial process other than the maintenance of comfort and amenities for the occupants of a building.

Process load: the calculated or measured time-integrated load on a building resulting from the consumption or release of process energy.

Programmable: capable of being preset to certain conditions and having self-initiation to change to those conditions.

Projection factor: the exterior horizontal shading projection depth divided by the sum of the height of the fenestration and the distance from the top of the fenestration to the bottom of the external shading projection in units consistent with the projection depth.

Prototype building: a generic building design of the same size and occupancy type as the proposed design that complies with the prescriptive requirements of subpart D of this part and has prescribed assumptions used to generate the energy budget concerning shape, orientation, and HVAC and other system designs.

Public driveways, walkways, and parking lots: exterior transit areas that are intended for use by the general public.

Public facility restroom: a restroom used by the transient public.

Readily accessible: capable of being reached quickly for operation, renewal, or inspections without requiring those to whom ready access is requisite to climb over or remove obstacles or to resort to portable ladders, chairs, etc. (See also accessible.)

Recooling: lowering the temperature of air that has been previously heated by a heating system.

Reference building: a specific building design that has the same form, orientation, and basic systems as the prospective design that is to be evaluated for compliance and meets all the criteria listed in subsection 501.2 or subsection 601.2.

Reheating: raising the temperature of air that has been previously cooled either by refrigeration or an economizer system.

Reset: adjustment of the controller setpoint to a higher or lower value automatically or manually.

Roof: those portions of the building envelope, including all opaque surfaces, fenestration, doors, and hatches, that are above conditioned space and are horizontal or tilted at less than 60° from horizontal. (See also''walls'')

Room air conditioner: an encased assembly designed as a unit to be mounted in a window or through a wall or as a console. It is designed primarily to provide free delivery of conditioned air to an enclosed space, room, or zone. It includes a prime source of refrigeration for cooling and dehumidification and means for circulating and cleaning air and may also include means for ventilating and heating.

Seasonal energy efficiency ratio (SEER): the total cooling output of an air conditioner during its normal annual usage period for cooling, in Btu, divided by the total electric energy input during the same period, in watt-hours.

Service systems: all energy-using or energy-distributing components in a building that are operated to support the occupant or process functions housed therein (including HVAC, service water heating, illumination, transportation, cooking or food preparation, laundering, or similar functions).

Service water heating: the supply of hot water for purposes other than comfort heating and process requirements.

Shading coefficient (SC): the ratio of solar heat gain through fenestration under a specific set of conditions, with or without integral shading devices, to that occurring through unshaded ⅛-in-thick clear double-strength glass under the same conditions.

Shell Building: a building for which the envelope is designed, constructed, or both prior to knowing the occupancy type. (See also ''speculative building'')

Single-Line Diagram: a simplified schematic drawing that shows the connection between two or more items. Common multiple connections are shown as one line.

Skylight: glazing that is horizontal or tilted less than 60° from horizontal.

Solar energy source: natural daylighting or thermal, chemical, or electrical energy derived from direct conversion of incident solar radiation at the building site.

Solar heat gain coefficient (SHGC): the ratio of the solar heat gain entering the space through the fenestration area to the incident solar radiation. Solar heat gain includes directly transmitted solar heat and absorbed solar radiation, which is then reradiated, conducted, or convected into the space. (See fenestration area)

Speculative building: a building for which the envelope is designed, constructed, or both prior to the design of the lighting, HVAC systems, or both. A speculative building differs from a shell building in that the intended occupancy is known for the speculative building. (See also ''shell building'')

System: a combination of equipment and/or controls, accessories, interconnecting means, and terminal elements by which energy is transformed so as to perform a specific function, such as HVAC, service water heating, or illumination.

Tandem wiring: pairs of luminaries operating with lamps in each luminaire powered from a single ballast contained in one of the luminaires.

Task lighting: lighting that provides illumination for specific functions and is directed to a specific surface or area.

Task location: an area of the space where significant visual functions are performed and where lighting is required above and beyond that required for general ambient use.

Terminal element: a device by which the transformed energy from a system is finally delivered. Examples include registers, diffusers, lighting fixtures, and faucets.

Thermal conductance (C): the constant time rate of heat flow through the unit

area of a body induced by a unit temperature difference between the surfaces, expressed in Btu/(h·ft²·°F). It is the reciprocal of thermal resistance. (See ''thermal resistance'')

Thermal mass: materials with mass heat capacity and surface area capable of affecting building loads by storing and releasing heat as the interior or exterior temperature and radiant conditions fluctuate. (See also ''heat capacity'' and ''wall heat capacity'')

Thermal mass wall insulation position:

(1) Exterior insulation position: a wall having all or nearly all of its mass exposed to the room air with the insulation on the exterior of that mass.

(2) Integral insulation position: a wall having mass exposed to both room and outside (outside) air with substantially equal amounts of mass on the inside and outside of the insulation layer.

(3) Interior insulation position: a wall not meeting either of the above definitions, particularly a wall having most of its mass external to an insulation layer.

Thermal resistance (R): the reciprocal of thermal conductance 1/C, l/H, 1/U; expressed in (h·ft². °F)/Btu.

Thermal transmittance (U): the overall coefficient of heat transfer from air to air. It is the time rate of heat flow per unit area under steady conditions from the fluid on the warm side of the barrier to the fluid on the cold side, per unit temperature difference between the two fluids, expressed in Btu/(h·ft². °F).

Thermal transmittance, overall (U_o): the gross overall (area weighted average) coefficient of heat transfer from air to air for a gross area of the building envelope, Btu/(h·ft². °F). The U_o value applies to the combined effect of the time rate of heat flows through the various parallel paths, such as windows, doors, and opaque construction areas, composing the gross area of one or more building envelope components, such as walls, floors, and roof or ceiling.

Thermostat: an automatic control device responsive to temperature.

Unconditioned space: space within a building that is not a conditioned space. (See ''conditioned space'')

Unitary cooling equipment: one or more factory-made assemblies that normally include an evaporator or cooling coil, a compressor, and a condenser combination (and may also include a heating function).

Unitary heat pump: one or more factory-made assemblies that normally include an indoor conditioning coil, compressor(s), and outdoor coil or refrigerant-to-water heater exchanger, including means to provide both heating and cooling functions.

Variable-air-volume (VAV) HVAC system: HVAC systems that control the dry-bulb temperature within a space by varying the volume of heated or cooled supply air to the space.

Vent damper: a device intended for installation in the venting system, in the outlet of or downstream of the appliance draft hood, of an individual automatically operating gas-fired appliance, which is designed to automatically open the venting system when the appliance is in operation and to automatically close off the venting system when the appliance is in a standby or shutdown condition.

Ventilation: the process of supplying or removing air by natural or mechanical means to or from any space. Such air may or may not have been conditioned.

Ventilation air: that portion of supply air which comes from the outside, plus any recirculated air, to maintain the desired quality of air within a designated space. (See also ''outdoor air'')

Visible light transmittance: the fraction of solar radiation in the visible light spectrum that passes through the fenestration (window, clerestory, or skylight).

Walls: those portions of the building envelope enclosing conditioned space, including all opaque surfaces, fenestration, and doors, which are vertical or tilted at an angle of 60* from horizontal or greater. (See also ''roof'')

Wall heat capacity: the sum of the products of the mass of each individual material in the wall per unit area of wall surface times its individual specific heat, expressed in Btu/(ft²·°F). (See'' thermal mass'')

Window to wall ratio (WWR): the ratio of the wall fenestration area to the gross exterior wall area.

Zone: a space or group of spaces within a building with any combination of heating, cooling, or lighting requirements sufficiently similar so that desired conditions can be maintained throughout by a single controlling device.

Subpart C—Design Conditions

§ 434.301 Design criteria.

301.1 The following design parameters shall be used for calculations required under subpart D of this part.

301.1.1 *Exterior Design Conditions*. Exterior Design Conditions shall be expressed in accordance with Table 301.1.

TABLE 301.1—EXTERIOR DESIGN CONDITIONS

Winter Design Dry-Bulb (99%).	.....	Degrees F.
Summer Design Dry-Bulb (2.5%).	.....	Degrees F.
Mean Coincident Wet-Bulb (2.5%).	.....	Degrees F.
Degree-Days, Heating (Base 65).	.....	HDD Base 65 °F.
Degree-Days, Cooling (Base 65).	.....	CDD Base 65 °F.
Annual Operating Hours, 8 a.m. to 4 p.m. when 55 °F≤T≤69 °F.	.....	Hours.

[The exterior design conditions shall be added to Table 301.1 from the city-specific Shading Coefficient table from appendix A of RS–1 (incorporated by reference, see § 434.701). Copies of specific tables contained in appendix A of RS–1 (incorporated by reference, see § 434.701). can be obtained from the Energy Code for Federal Commercial Buildings, Docket No. EE–RM–79–112–C, EE–43, Office of Building Research and Standards, U.S. Department of Energy, Room 1J–018, 1000 Independence Avenue, SW., Washington, DC 20585, (202) 586–9127. Adjustments may be made to reflect local climates which differ from the tabulated temperatures or local weather experience as determined by the building official. Where local building site climatic data are not available, climate data from a nearby location included in RS–1, appendix C, (incorporated by reference, see § 434.701) and RS–4 Chapter 24, Table 1, (incorporated by reference, see § 434.701) shall be used as determined by the building official.]

301.2 *Indoor Design Conditions*. Indoor design temperature and humidity conditions shall be in accordance with the comfort criteria in RS–2 (incorporated by reference, see § 434.701), except that humidification and dehumidification are not required.

Subpart D—Building Design Requirements—Electric Systems and Equipment

§ 434.401 Electrical power and lighting systems.

Electrical power and lighting systems, other than those systems or portions thereof required for emergency use only, shall meet these requirements.

401.1 *Electrical Distribution Systems*.

401.1.1 *Check Metering*. Single-tenant buildings with a service over 250 kVA and tenant spaces with a connected load over 100 kVA in multiple-tenant buildings shall have provisions for check metering of electrical consumption. The electrical power feeders for which provision for check metering is required shall be subdivided as follows:

401.1.1.1 Lighting and receptacle outlets

401.1.1.2 HVAC systems and equipment

401.1.1.3 Service water heating (SWH), elevators, and special occupant equipment or systems of more than 20 kW.

401.1.1.4 Exception to 401.1.1.1 through 401.1.1.3: 10 percent or less of the loads on a feeder may be from another usage or category.

401.1.2 Tenant-shared HVAC and service hot water systems in multiple tenant buildings shall have provision to be separately check metered.

401.1.3 Subdivided feeders shall contain provisions for portable or permanent check metering. The minimum acceptable arrangement for compliance shall provide a safe method for access by qualified persons to the enclosures through which feeder conductors pass and provide sufficient space to attach clamp-on or split core current transformers. These enclosures may be separate compartments or combined spaces with electrical cabinets serving another function. Dedicated enclosures so furnished shall be identified as to measuring function available.

401.1.4 *Electrical Schematic*. The person responsible for installing the electrical distribution system shall provide the Federal building manager a single-line diagram of the record drawing for the electrical distribution system, which includes the location of check metering access, schematic diagrams of non-

HVAC electrical control systems, and electrical equipment manufacturer's operating and maintenance literature.

401.2 *Electric Motors*. All permanently wired polyphase motors of 1 hp or more shall meet these requirements:

401.2.1 *Efficiency*. NEMA design A & B squirrel-cage, foot-mounted, T-frame induction motors having synchronous speeds of 3600, 1800, 1200, and 900 rpm, expected to operate more than 1000 hours per year shall have a nominal full-load efficiency no less than that shown in Table 401.2.1 or shall be classified as an ''energy efficient motor'' in accordance with RS–3 (incorporated by reference, see § 434.701). The following are not covered:

(a) Multispeed motors used in systems designed to use more than one speed.

(b) Motors used as a component of the equipment meeting the minimum equipment efficiency requirements of subsection 403, provided that the motor input is included when determining the equipment efficiency.

TABLE 401.2.1—MINIMUM ACCEPTABLE NOMINAL FULL-LOAD EFFICIENCY FOR SINGLE-SPEED POLYPHASE SQUIRREL-CAGE INDUCTION MOTORS HAVING SYNCHRONOUS SPEEDS OF 3600, 1800, 1200 AND 900 RPM [1]

HP	2-Pole		4-Pole		6-Pole		8-Pole	
	Nominal efficiency	Minimum efficiency	Nominal efficiency	Minimum efficiency	Nominal efficiency	Minimum efficiency	Nominal efficiency	Minimum efficiency
Full-Load Efficiencies—Open Motors								
1.0	.....	.....	82.5	81.5	80.0	78.5	74.0	72.0
1.5	82.5	81.5	84.0	82.5	84.0	82.5	75.5	74.0
2.0	84.0	82.5	84.0	82.5	85.5	84.0	85.5	84.0
3.0	84.0	82.5	86.5	85.5	86.5	85.5	86.5	85.5
5.0	85.5	84.0	87.5	86.5	87.5	86.5	87.5	86.0
7.5	87.5	86.5	88.5	87.5	88.5	87.5	88.5	87.5
10.0	88.5	87.5	89.5	88.5	90.2	89.5	89.5	88.5
15.0	89.5	88.5	91.0	90.2	90.2	89.5	89.5	88.5
20.0	90.2	89.5	91.0	90.2	91.0	90.2	90.2	89.5
25.0	91.0	90.2	91.7	91.0	91.7	91.0	90.2	89.5
30.0	91.0	90.2	92.4	91.7	92.4	91.7	91.7	90.2
40.0	91.7	91.0	93.0	92.4	93.0	92.4	91.0	90.2
50.0	92.4	91.7	93.0	92.4	93.0	92.4	91.7	91.0
60.0	93.0	92.4	93.6	93.0	93.6	93.0	92.4	91.7
75.0	93.0	92.4	94.1	93.6	93.6	93.0	93.6	93.0
100.0	93.0	92.4	94.1	93.6	94.1	93.6	93.6	93.0
125.0	93.6	93.0	94.5	94.1	94.1	93.6	93.6	93.0
150.0	93.6	93.0	95.0	94.5	94.5	94.1	93.6	93.0
200.0	94.5	94.1	95.0	94.5	94.5	94.1	93.6	93.0
Full-Load Efficiencies—Enclosed Motors								
1.0	75.5	74.5	82.5	81.5	80.0	78.5	74.0	72.0
1.5	82.5	81.5	84.0	82.5	85.5	84.0	77.0	75.5
2.0	84.0	82.5	84.5	82.5	86.5	85.5	82.5	81.5
3.0	85.5	84.0	87.5	86.5	87.5	86.5	84.0	82.5
5.0	87.5	86.5	87.5	86.5	87.5	86.5	85.5	84.0
7.5	88.5	87.5	89.5	88.5	89.5	88.5	85.5	84.0
10.0	89.5	88.5	89.5	88.5	89.5	88.5	88.5	87.5
15.0	90.2	89.5	91.0	90.2	90.2	89.5	88.5	87.5
20.0	90.2	89.5	91.0	90.2	90.2	89.5	89.5	88.5
25.0	91.0	90.2	92.4	91.7	91.7	91.0	89.5	88.5
30.0	91.0	90.2	92.4	91.7	91.7	91.0	91.0	90.2
40.0	91.7	91.0	93.0	92.4	93.0	92.4	91.0	90.2
50.0	92.4	91.7	93.0	92.4	93.0	92.4	91.7	91.0
60.0	93.0	92.4	93.6	93.0	93.6	93.0	91.7	91.0
75.0	93.0	92.4	94.1	93.6	93.6	93.0	93.0	92.4
100.0	93.6	93.0	94.5	94.1	94.1	93.6	93.0	92.4
125.0	94.5	94.1	94.5	94.1	94.1	93.6	93.6	93.0
150.0	94.5	94.1	95.0	94.5	94.5	94.1	94.1	93.0
200.0	95.0	94.5	95.0	94.5	95.0	94.5	94.1	93.6

[1] For many applications, efficiencies greater than those listed are likely to be cost-effective. Guidance for evaluating the cost effectiveness of energy efficient motor applications is given in RS–43 and RS–44 (incorporated by reference, see § 434.701).

401.3 Lighting Power Allowance. The lighting system shall meet the provisions of subsections 401.3.1 through 401.3.5.

401.3.1 Building Exteriors. The total connected exterior lighting power for the building, or a facility containing multiple buildings, shall not exceed the total exterior lighting power allowance, which is the sum of the individual allowances determined from Table 401.3.1. The individual allowances are determined by multiplying the specific area or length of each area description times the allowance for that area. Exceptions are as follows: Lighting for outdoor manufacturing or processing facilities, commercial greenhouses, outdoor athletic facilities, public monuments, designated high-risk security areas, signs, retail storefronts, exterior enclosed display windows, and lighting specifically required by local ordinances and regulations.

TABLE 401.3.1—EXTERIOR LIGHTING POWER ALLOWANCE

Area description	Allowance
Exit (with or without canopy)	25 W/lin ft of door opening.
Entrance (without canopy)	30 W/lin ft of door opening.
Entrance (with canopy):	
High Traffic (retail, hotel, airport, theater, etc.)	10 W/ft^2 of canopied area.
Light Traffic (hospital, office, school, etc.)	4 W/ft^2 of canopied area.
Loading area	0.40 W/ft^2.
Loading door	20 W/lin ft of door opening.
Building exterior surfaces/facades	0.25 W/ft^2 of surface area to be illuminated.
Storage and non-manufacturing work areas	0.20 W/ft^2.
Other activity areas for casual use such as picnic grounds, gardens, parks, and other landscaped areas.	0.10 W/ft^2.
Private driveways/walkways	0.10 W/ft^2.
Public driveways/walkways	0.15 W/ft^2.
Private parking lots	0.12 W/ft^2.
Public parking lots	0.18 W/ft^2.

401.3.1.1 Trade-offs of exterior lighting budgets among exterior areas shall be allowed provided the total connected lighting power of the exterior area does not exceed the exterior lighting power allowance. Trade-offs between interior lighting power allowances and exterior lighting power allowances shall not be allowed.

401.3.2 *Building interiors*. The total connected interior lighting power for a building, including adjustments in accordance with subsection 401.3.3, shall not exceed the total interior lighting power allowance explained in this paragraph. Using Table 401.3.2a, multiply the interior lighting power allowance value by the gross lighted area of the most appropriate building or space activity. For multi-use buildings, using Table 401.3.2a, select the interior power allowance value for each activity using the column for the gross lighted area of the whole building and multiply it by the associated gross area for that activity. The interior lighting power allowance is the sum of all the wattages for each area/activity. Using Table 401.3.2b, c, or d, multiply the interior lighting power allowance values of each individual area/activity by the area of the space and by the area factor from Figure 401.3.2e, based on the most appropriate area/activity provided. The interior lighting power allowance is the sum of the wattages for each individual space. When over 20% of the building's tasks or interior areas are undefined, the most appropriate value for that building from Table 401.3.2a shall be used for the undefined spaces. Exceptions are as follows:

(a) Lighting power that is an essential technical element for the function performed in theatrical, stage, broadcasting, and similar uses.

(b) Specialized medical, dental, and research lighting.

(c) Display lighting for exhibits in galleries, museums, and monuments.

(d) Lighting solely for indoor plant growth (between the hours of 10:00 pm and 6:00 am).

(e) Emergency lighting that is automatically off during normal building operation.

(f) High-risk security areas.

(g) Spaces specifically designed for the primary use by the physically impaired or aged.

(h) Lighting in dwelling units.

401.3.2.1 Trade-offs of the interior lighting power budgets among interior spaces shall be allowed provided the total connected lighting power within the building does not exceed the interior lighting power allowance. Trade-offs between interior lighting power allowances and exterior lighting power allowances shall not be allowed.

401.3.2.2 *Building/Space Activities*. Definitions of buildings/space activity as they apply to Table 401.3.2a are as follows. These definitions are necessary to characterize the activities for which lighting is provided. They are applicable only to Table 401.3.2a. They are not intended to be used elsewhere in place of building use group definitions provided in the Building Code. They are not included in § 434.201, ''Definitions,'' to avoid confusion with ''Occupancy Type Categories.''

(a) *Food service, fast food, and cafeteria:* This group includes cafeterias, hamburger and sandwich stores, bakeries, ice cream parlors, cookie stores, and all other kinds of retail food service establishments in which customers are generally served at a counter and their direct selections are paid for and taken to a table or carried out.

(b) *Garages:* This category includes all types of parking garages, except for service or repair areas.

(c) *Leisure dining and bar:* This group includes cafes, diners, bars, lounges, and similar establishments where orders are placed with a wait person.

(d) *Mall concourse, multi-store service:* This group includes the interior of multifunctional public spaces, such as shopping center malls, airports, resort concourses and malls, entertainment facilities, and related types of buildings or spaces.

(e) *Offices:* This group includes all kinds of offices, including corporate and professional offices, office/laboratories, governmental offices, libraries, and similar facilities, where paperwork occurs.

(f) *Retail:* A retail store, including departments for the sale of accessories, clothing, dry goods, electronics, and toys, and other types of establishments that display objects for direct selection and purchase by consumers. Direct selection means literally removing an item from display and carrying it to the checkout or pick-up at a customer service facility.

(g) *Schools:* This category, subdivided by pre-school/elementary, junior high/high school, and technical/vocational, includes public and private educational institutions, for children or adults, and may also include community centers, college and university buildings, and business educational centers.

(h) *Service establishment:* A retail-like facility, such as watch repair, real estate offices, auto and tire service facilities, parts departments, travel agencies and similar facilities, in which the customer obtains services rather than the direct selection of goods.

(i) *Warehouse and storage:* This includes all types of support facilities, such as warehouses, barns, storage buildings, shipping/receiving buildings, boiler or mechanical buildings, electric power buildings, and similar buildings where the primary visual task is large items.

401.3.2—Tables and Figures

TABLE 401.3.2A—INTERIOR LIGHTING POWER ALLOWANCE W/FT^2

Building space activity [1]	Gross lighted area of total building					
	0 to 2,000 ft^2	2,001 to 10,000 ft^2	10,001 to 25,000 ft^2	25,001 to 50,000 ft^2	50,001 to 250,000 ft^2	250,000 ft^2
Food Service:						
Fast Food/Cafeteria	1.50	1.38	1.34	1.32	1.31	1.30
Leisure Dining/Bar	2.20	1.91	1.71	1.56	1.46	1.40
Offices	1.90	1.81	1.72	1.65	1.57	1.50
Retail [3]	3.30	3.08	2.83	2.50	2.28	2.10
Mall Concourse Multi-store Service	1.60	1.58	1.52	1.46	1.43	1.40
Service Establishment	2.70	2.37	2.08	1.92	1.80	1.70
Garages	0.30	0.28	0.24	0.22	0.21	0.20
Schools:						

TABLE 401.3.2A—INTERIOR LIGHTING POWER ALLOWANCE W/FT 2—Continued

Building space activity [1]	Gross lighted area of total building					
	0 to 2,000 ft 2	2,001 to 10,000 ft 2	10,001 to 25,000 ft 2	25,001 to 50,000 ft 2	50,001 to 250,000 ft 2	250,000 ft 2
Preschool/Elementary	1.80	1.80	1.72	1.65	1.57	1.50
Jr. High/High School	1.90	1.90	1.88	1.83	1.76	1.70
Technical/Vocational	2.40	2.33	2.17	2.01	1.84	1.70
Warehouse/Storage	0.80	0.66	0.56	0.48	0.43	0.40

[1] If at least 10% of the building area is intended for multiple space activities, such as parking, retail, and storage in an office building, then calculate for each separate building type/space activity.
[2] The values in the categories are building wide allowances which include the listed activity and directly related facilities such as conference rooms, lobbies, corridors, restrooms, etc.
[3] Includes general, merchandising, and display lighting.

TABLE 401.3.2B—UNIT INTERIOR LIGHTING POWER ALLOWANCE

Common area/activity [1]	UPD W/ft 2
Auditorium [2]	1.4
Corridor [3]	0.8
Classroom/Lecture Hall	2.0
Electrical/Mechanical Equipment Room:	
General [3]	0.7
Control Rooms [3]	1.5
Food Service:	
Fast Food/Cafeteria	1.3
Leisure Dining [4]	1.4
Bar/Lounge [4]	2.5
Kitchen	1.4
Recreation/Lounge	0.7
Stair:	
Active Traffic	0.6
Emergency Exit	0.4
Toilet & Washroom	0.8
Garage:	
Auto & Pedestrian Circulation Area	0.3
Parking Area	0.2
Laboratory	2.2
Library:	
Audio Visual	1.1
Stack Area	1.1
Card File & Cataloging	0.8
Reading Area	1.1
Lobby (General):	
Reception & Waiting	1.0
Elevator Lobbies	0.4
Atrium (Multi-Story):	
First 3 Floors	0.7
Each Additional Floor	0.2
Locker Room & Shower	0.8
Office Category 1	
Enclosed offices, all open plan offices w/o partitions or w/partitions [6] lower than 4.5 ft below the ceiling. [5]	
Reading, Typing and Filing	1.5
Drafting	1.9
Accounting	1.6
Office Category 2:	
Open plan offices 900 ft 2 or larger w/partitions	
1 3.5 to 4.5 ft below the ceiling..	
Offices less than 900 ft2 shall use category 1 [3]	
Reading, Typing and Filing	1.5
Drafting	2.0
Accounting	1.8
Office Category 3:	
Open plan offices 900 ft 2 or larger w/partitions [6] higher than 3.5 ft below the ceiling.	
Offices less than 900 ft 2 shall use category 1. [3]	
Reading, Typing and Filing	1.7
Drafting	2.3
Accounting	1.9
Common Activity Areas	
Conference/Meeting Room [2]	1.3

TABLE 401.3.2B—UNIT INTERIOR LIGHTING POWER ALLOWANCE—Continued

Common area/activity [1]	UPD W/ft [2]
Computer/Office Equipment	1.1
Filing, Inactive	1.0
Mail Room	1.8
Shop (Non-Industrial):	
Machinery	2.5
Electrical/Electronic	2.5
Painting	1.6
Carpentry	2.3
Welding	1.2
Storage and Warehouse;	
Inactive Storage	0.2
Active Storage, Bulky	0.3
Active Storage, Fine	0.9
Material Handling	1.0
Unlisted Space	0.2

[1] Use a weighted average UPD in rooms with multiple simultaneous activities, weighted in proportion to the area served.
[2] A 1.5 power adjustment factor is applicable for multi-function spaces when a supplementary system having independent controls is installed that has installed power ≤33% of the adjusted lighting power for that space.
[3] Area factor of 1.0 shall be used for these spaced.
[4] UPD includes lighting power required for clean-up purposes.
[5] Area factor shall not exceed 1.55.
[6] Not less than 90 percent of all work stations shall be individually enclosed with partitions of at least the height described.

TABLE 401.3.2C—UNIT INTERIOR LIGHTING POWER ALLOWANCE

Specific building area/activity [1]	UPD W/ft [2]
Airport, Bus and Rail Station:	
Baggage Area	0.8
Concourse/Main Thruway	0.9
Ticket Counter	2.0
Waiting & Lounge Area	0.8
Bank:	
Customer Area	1.0
Banking Activity Area	2.2
Barber & Beauty Parlor	1.6
Church, Synagogue, Chapel:	
Worship/Congregational	1.7
Preaching & Sermon/Choir	1.8
Dormitory:	
Bedroom	1.0
Bedroom w/Study	1.3
Study Hall	1.2
Fire & Police Department:	
Fire Engine Room	0.7
Jail Cell	0.8
Hospital/Nursing Home:	
Corridor [3]	1.3
Dental Suite/Examination/Treatment	1.6
Emergency	2.0
Laboratory	1.7
Lounge/Waiting Room	0.9
Medical Supplies	2.4
Nursery	1.6
Nurse Station	1.8
Occupational Therapy/Physical Therapy	1.4
Patient Room	1.2
Pharmacy	1.5
Radiology	1.8
Surgical & Obstetrics Suites:	
General Area	1.8
Operating Room	6.0
Recovery	2.0
Hotel/Conference Center:	
Banquet Room/Multipurpose [2]	1.7
Bathroom/Powder Room	1.2
Guest Room	0.9
Public Area	1.0
Exhibition Hall	1.8
Conference/Meeting [2]	1.5
Lobby	1.5
Reception Desk	2.4

TABLE 401.3.2C—UNIT INTERIOR LIGHTING POWER ALLOWANCE—Continued

Specific building area/activity [1]	UPD W/ft [2]
Laundry:	
Washing	0.9
Ironing & Sorting	1.3
Museum & Gallery:	
General Exhibition	1.9
Inspection/Restoration	3.0
Storage (Artifacts):	
Inactive	0.6
Active	0.7
Post Office:	
Lobby	1.1
Sorting & Mailing	2.1
Service Station/Auto Repair	0.8
Theater:	
Performance Arts	1.3
Motion Picture	1.0
Lobby	1.3
Retail Establishments—Merchandising & Circulation Area (Applicable to all lighting, including accent and display lighting, installed in merchandising and circulation areas):	
Type 1: Jewelry merchandising, where minute examination of displayed merchandise is critical.	5.6
Type 2: Fine merchandising, such as fine apparel and accessories, china, crystal, and silver art galleries and where the detailed display and examination of merchandising is important.	2.9
Type 3: Mass merchandising, such as general apparel, variety goods, stationary, books, sporting goods, hobby materials, cameras, gifts, and luggage, displayed in a warehouse type of building, where focused display and detailed examination of merchandise is important.	2.7
Type 4: General merchandising, such as general apparel, variety goods, stationary, books, sporting goods, hobby materials, cameras, gifts, and luggage, displayed in a department store type of building, where general display and examination of merchandise is adequate.	2.3
Type 5: Food and miscellaneous such as bakeries, hardware and housewares, grocery stores, appliance and furniture stores, where pleasant appearance is important.	2.4
Type 6: Service establishments, where functional performance is important.	2.6
Mall Concourse	1.4
Retail Support Areas	2.1
Tailoring	1.1
Dressing/Fitting Rooms.	

[1] Use a weighted average UPD in rooms with multiple simultaneous activities, weighted in proportion to the area served.
[2] A 1.5 power adjustment factor is applicable for multi-function spaces when a supplementary system having independent controls is installed that has installed power ≤33% of the adjusted lighting power for that space.
[3] Area factor shall not exceed 1.55.

TABLE 401.3.2D—UNIT INTERIOR LIGHTING POWER ALLOWANCE

Indoor athletic area/activity [1] [2]	UPD W/ft [2]
Seating Area, All Sports	0.4
Badminton:	
Club	0.5
Tournament	0.8
Basketball/Volleyball:	
Intramural	0.8
College	1.3
Professional	1.9
Bowling:	
Approach Area	0.5
Lanes	1.1
Boxing or Wrestling (platform):	
Amateur	2.4
Professional	4.8
Gymnasium:	
General Exercising and Recreation Only	1.0
Handball/Racquetball/Squash:	
Club	1.3
Tournament	2.6
Hockey, Ice:	
Amateur	1.3
College or Professional	2.6
Skating Rink:	
Recreational	0.6
Exhibition/Professional	2.6
Swimming:	
Recreational	0.9
Exhibition	1.5

TABLE 401.3.2D—UNIT INTERIOR LIGHTING POWER ALLOWANCE—Continued

Indoor athletic area/activity [1] [2]	UPD W/ft²
Underwater	1.0
Tennis:	
Recreational (Class III)	1.3
Club/College (Class II)	1.9
Professional (Class I)	2.6
Tennis, Table:	
Club	1.0
Tournament	1.6

[1] Area factor of 1.0 shall be used for these spaces.
[2] Consider as 10 ft. beyond playing boundaries but less than or equal to the total floor area of the sports space minus spectator seating area.

Figure 401.3.2e—Area Factor Formula

$$\text{where } n = \frac{10.21\,(CH - 2.5)}{\sqrt{A_r}} - 1$$

Area Factor Formula:

Area Factor (AF) = $0.2 + 0.8(1/0.9^n)$

Where:

AF = area factor,
CH = ceiling height (ft),
A_r = space area (ft²).

If AF <1.0 use 1.0; if AF >1.8 use 1.8

401.3.3 *Lighting Power Control Credits.* The interior connected lighting power determined in accordance with § 434.401.3.2 can be decreased for luminaries that are automatically controlled for occupancy, daylight, lumen maintenance, or programmable timing. The adjusted interior connected lighting power shall be determined by subtracting the sum of all lighting power control credits from the interior connected lighting power. Using Table 401.3.3, the lighting power control credit equals the power adjustment factor times the connected lighting power of the controlled lighting. The lighting power adjustment shall be applied with the following limitations:

(a) It is limited to the specific area controlled by the automatic control device.

(b) Only one lighting power adjustment may be used for each building space or luminaire, and 50 percent or more of the controlled luminaire shall be within the applicable space.

(c) Controls shall be installed in series with the lights and in series with all manual switching devices.

(d) When sufficient daylight is available, daylight sensing controls shall be capable of reducing electrical power consumption for lighting (continuously or in steps) to 50 percent or less of maximum power consumption.

(e) Daylight sensing controls shall control all luminaires to which the adjustment is applied and that direct a minimum of 50 percent of their light output into the daylight zone.

(f) Programmable timing controls shall be able to program different schedules for occupied and unoccupied days, be readily accessible for temporary override with automatic return to the original schedule, and keep time during power outages for at least four hours.

TABLE 401.3.3—LIGHTING POWER ADJUSTMENT FACTORS

Automatic control devices	PAF
(1) Daylight Sensing controls (DS), continuous dimming	0.30
(2) DS, multiple step dimming	0.20
(3) DS, ON/OFF	0.10
(4) DS continuous dimming and programmable timing	0.35
(5) DS multiple step dimming and programmable timing	0.25
(6) DS ON/OFF and programmable timing	0.15
(7) DS continuous dimming, programmable timing, and lumen maintenance	0.40
(8) DS multiple step dimming, programmable timing, and lumen maintenance	0.30
(9) DS ON/OFF, programmable timing, and lumen maintenance	0.20
(10) Lumen maintenance control	0.10
(11) Lumen maintenance and programmable timing control	0.15
(12) Programmable timing control	0.15

TABLE 401.3.3—LIGHTING POWER ADJUSTMENT FACTORS—Continued

Automatic control devices	PAF
(13) Occupancy sensor (OS)	0.30
(14) OS and DS, continuous dimming	0.40
(15) OS and DS, multiple-step dimming	0.35
(16) OS and DS, ON/OFF	0.35
(17) OS, DS continuous dimming, and lumen maintenance	0.45
(18) OS, DS multiple-step dimming and lumen maintenance	0.40
(19) OS, DS ON/OFF, and lumen maintenance	0.35
(20) OS and lumen maintenance	0.35
(21) OS and programmable timing control	0.35

401.3.4 *Lighting controls.*

401.3.4.1 *Type of Lighting Controls.* All lighting systems shall have controls, with the exception of emergency use or exit lighting.

401.3.4.2 *Number of Manual Controls.* Spaces enclosed by walls or ceiling-high partitions shall have a minimum of one manual control (on/off switch) for lighting in that space. Additional manual controls shall be provided for each task location or for each group of task locations within an area of 450 ft^2 or less. For spaces with only one lighting fixture or with a single ballast, one manual control is required. Exceptions are as follows:

401.3.4.2.1 Continuous lighting for security;

401.3.4.2.2 Systems in which occupancy sensors, local programmable timers, or three-level (including OFF) step controls or preset dimming controls are substituted for manual controls at the rate of one for every two required manual controls, providing at least one control is installed for every 1500 watts of power.

401.3.4.2.3 Systems in which four-level (including OFF) step controls or preset dimming controls or automatic or continuous dimming controls are substituted for manual controls at a rate of one for every three required manual controls, providing at least one control is installed for every 1500 watts of power.

401.3.4.2.4 Spaces that must be used as a whole, such as public lobbies, retail stores, warehouses, and storerooms.

401.3.4.3 *Multiple Location Controls.* Manual controls that operate the same load from multiple locations must be counted as one manual control.

401.3.4.4 *Control Accessibility.* Lighting controls shall be readily accessible from within the space controlled. Exceptions are as follows: Controls for spaces that are to be used as a whole, automatic controls, programmable controls, controls requiring trained operators, and controls for safety hazards and security.

401.3.4.5 *Hotel and Motel Guest Room Control.* Hotel and motel guest rooms and suites shall have at least one master switch at the main entry door that controls all permanently wired lighting fixtures and switched receptacles excluding bathrooms. The following exception applies: Where switches are provided at the entry to each room of a multiple-room suite.

401.3.4.6 *Switching of Exterior Lighting.* Exterior lighting not intended for 24-hour use shall be automatically switched by either timer or photocell or a combination of timer and photocell. When used, timers shall be capable of seven-day and seasonal daylight schedule adjustment and have power backup for at least four hours.

401.3.5 *Ballasts.*

401.3.5.1 *Tandem Wiring.* One-lamp or three-lamp fluorescent luminaries that are recess mounted within 10 ft center-to-center of each other, or pendant mounted, or surface mounted within 1 ft of each other, and within the same room, shall be tandem wired, unless three-lamp ballasts are used.

401.3.5.2 *Power Factor.* All ballasts shall have a power factor of at least 90%, with the exception of dimming ballasts, and ballasts for circline and compact fluorescent lamps and low wattage high intensity discharge (HID) lamps not over 100 W.

§ 434.402 Building envelope assemblies and materials.

The building envelope and its associated assemblies and materials shall meet the provisions of this section.

402.1 *Calculations and Supporting Information.*

402.1.1 *Material Properties.* Information on thermal properties, building envelope system performance, and component heat transfer shall be obtained from RS–4. When the information is not available from RS–4, (incorporated by reference, see § 434.701) the data shall be obtained from manufacturer's information or laboratory or field test measurements using RS–5, RS–6, RS–7, or RS–8 (incorporated by reference, see § 434.701).

402.1.1.1 The shading coefficient (SC) for fenestration shall be obtained from RS–4 (incorporated by reference, see § 434.701) or from manufacturer's test data. The shading coefficient of the fenestration, including both internal and external shading devices, is SC_X and excludes the effect of external shading projections, which are calculated separately. The shading coefficient used for louvered shade screens shall be determined using a profile angle of 30 degrees as found in Table 41, Chapter 27 of RS–4 (incorporated by reference, see § 434.701).

402.1.2 *Thermal Performance Calculations.* The overall thermal transmittance of the building envelope shall be calculated in accordance with Equation 402.1.2:

$$U_o = \sum U_i A_i / A_o = \left(U_1 A_1 + U_2 A_2 + \ . \ . \ . \ + U_n A_n\right) / A_o \qquad (402.1.2)$$

Where:

U_o = the area-weighted average thermal transmittance of the gross area of the building envelope; *i.e.*, the exterior wall assembly including fenestration and doors, the roof and ceiling assembly, and the floor assembly, Btu/(h·ft^2·°F)

A_o = the gross area of the building envelope, ft^2

U_i = the thermal transmittance of each individual path of the building envelope, *i.e.*, the opaque portion or the fenestration, Btu/(h·ft^2·°F)

U_i = $1/R_i$ (where R_i is the total resistance to heat flow of an individual path through the building envelope)

A_i = the area of each individual element of the building envelope, ft^2

The thermal transmittance of each component of the building envelope shall be determined with due consideration of all major series and parallel heat flow paths through the elements of the component and film coefficients and shall account for any compression of insulation. The thermal transmittance of opaque elements of assemblies shall be determined using a series path procedure with corrections for the presence of parallel paths within an element of the envelope assembly (such as wall cavities with parallel paths through insulation and studs). The thermal performance of adjacent ground in below-grade applications shall be excluded from all thermal calculations.

402.1.2.1 Envelope Assemblies Containing Metal Framing. The thermal transmittance of the envelope assembly containing metal framing shall be determined from one of three methods:

(a) Laboratory or field test measurements based on RS–5, RS–6, RS–7, or RS–8 (incorporated by reference, see § 434.701).

(b) The zone method described in Chapter 22 of RS–4 (incorporated by reference, see § 434.701) and the formulas on page 22.10.

(c) For metal roof trusses or metal studs covered by Tables 402.1.2.1a and b, the total resistance of the series path shall be calculated in accordance with the following Equations:

$$U_i = 1/R_t \qquad R_t = R_i + R_e \qquad \text{Equation 402.1.2.1a}$$

Where:

R_t = the total resistance of the envelope assembly

R_i = the resistance of the series elements (for i = 1 to n) excluding the parallel path element(s)

R_e = the equivalent resistance of the element containing the parallel path (R-value of

insulation × F_c). Values for F_c and equivalent resistances shall be taken from Tables 402.1.2.1a or b.

TABLE 402.1.2.1A—PARALLEL PATH CORRECTION FACTORS—METAL ROOF TRUSSES SPACED 4 FT. O.C. OR GREATER THAT PENETRATE THE INSULATION

Effective framing cavity R-values	Correction factor F_c	Equivalent resistance R_e [1]
R–0	1.00	R–0
R–5	0.96	R–4.8
R–10	0.92	R–9.2
R–15	0.88	R–13.2
R–20	0.85	R–17.0

TABLE 402.1.2.1A—PARALLEL PATH CORRECTION FACTORS—METAL ROOF TRUSSES SPACED 4 FT. O.C. OR GREATER THAT PENETRATE THE INSULATION—Continued

Effective framing cavity R-values	Correction factor F_c	Equivalent resistance R_e [1]
R–25	0.81	R–20.3
R–30	0.79	R–23.7
R–35	0.76	R–26.6
R–40	0.73	R–29.2
R–45	0.71	R–32.0
R–50	0.69	R–34.5
R–55	0.67	R–36.0

[1] Based on 0.66-inch-diameter cross members every one foot.

TABLE 402.1.2.1B—PARALLEL PATH CORRECTION FACTORS—METAL FRAMED WALLS WITH STUDS 16 GA. OR LIGHTER

Size of members	Spacing of framing, in.	Cavity insulation R-Value	Correction factor F_c	Equivalent resistance R_e
2 × 4	16 O.C.	R–11	0.50	R–5.5
		R–13	0.46	R–6.0
		R–15	0.43	R–6.4
2 × 4	24 O.C.	R–11	0.60	R–6.6
		R–13	0.55	R–7.2
		R–15	0.52	R–7.8
2 × 6	16 O.C.	R–19	0.37	R–7.1
		R–21	0.35	R–7.4
2 × 6	24 O.C.	R–19	0.45	R–8.6
		R–21	0.43	R–9.0
2 × 8	16 O.C.	R–25	0.31	R–7.8
2 × 8	24 O.C.	R–25	0.38	R–9.6

402.1.2.2 *Envelope Assemblies Containing Nonmetal Framing*. The thermal transmittance of the envelope assembly shall be determined from laboratory or field test measurements based on RS–5, RS–6, RS–7, or RS–8 (incorporated by reference, see § 434.701) or from the series-parallel (isothermal planes) method provided in page 23.2 of Chapter 23 of RS–4 (incorporated be reference, see § 434.701).

402.1.2.3 *Metal Buildings*. For elements with internal metallic structures bonded on one or both sides to a metal skin or covering, the calculation procedure specified in RS–9 (incorporated by reference, see § 434.701) shall be used.

402.1.2.4 *Fenestration Assemblies*. Determine the overall thermal transmittance of fenestration assemblies in accordance with RS–18 and RS–19 (incorporated by reference, see § 434.701) or by calculation. Calculation of the overall thermal transmittance of fenestration assemblies shall consider the center-of-glass, edge-of-glass, and frame components.

(a) The following equation 402.1.2.4a shall be used.

$$U_{of} = \left[\sum_{i=1}^{n}\left(U_{cg,i} \times A_{cg,i} + U_{eg,i} \times A_{eg,i} + U_{f,i} \times A_{f,i}\right)\right] \Big/ \left[\sum_{i=1}^{n}\left(A_{cg,i} + A_{eg,i} + A_{f,i}\right)\right]$$
$$= \left(U_{cg,1} \times A_{cg,1} + U_{eg,1} \times A_{eg,1} + U_{f,1} \times A_{f,1} + U_{cg,2} \times A_{cg,2} + U_{eg,2} \times A_{eg,2} + U_{f,2} \times A_{f,2} + \ldots U_{cg,n} \times A_{cg,n}\right.$$
$$\left. + U_{eg,n} \times A_{eg,n} + U_{f,n} \times A_{f,n}\right) \Big/ \left(A_{cg,1} + A_{eg,1} + A_{f,1} + A_{cg,2} + A_{eg,2} + A_{f,2} + \ldots A_{cg,n} + A_{eg,n} + A_{f,n}\right)$$

$$U_{of} = \left[\sum_{i=1}^{n}\left(U_{cg,i} \times A_{cg,i} + U_{eg,i} \times A_{eg,i} + U_{f,i} \times A_{f,i}\right)\right] \Big/ \left[\sum_{i=1}^{n}\left(A_{cg,i} + A_{eg,i} + A_{f,i}\right)\right] \qquad \text{Equation 402.1.2.4a}$$
$$= \left(U_{cg,1} \times A_{cg,1} + U_{eg,1} \times A_{eg,1} + U_{f,1} \times A_{f,1} + U_{cg,2} \times A_{cg,2} + U_{eg,2} \times A_{eg,2} + U_{f,2} \times A_{f,2}\right.$$
$$\left. + \ldots U_{cg,n} \times A_{cg,n} + U_{eg,n} \times A_{eg,n} + U_{f,n} \times A_{f,n}\right) \Big/ \left(A_{cg,1} + A_{eg,1} + A_{f,1} + A_{cg,2} + A_{eg,2} + A_{f,2}\right.$$
$$\left. + \ldots A_{cg,n} + A_{eg,n} + A_{f,n}\right)$$

Where:

U_{of} = the overall thermal transmittance of the fenestration assemblies, including the center-of-glass, edge-of-glass, and frame components, Btu/(h·ft^2·°F)

i = numerical subscript (1, 2, . . .n) refers to each of the various fenestration types present in the wall

n = the number of fenestration assemblies in the wall assembly

U_{cg} = the thermal transmittance of the center-of-glass area, Btu/(h·ft^2·°F)

A_{cg} = the center of glass area, that is the overall visible glass area minus the edge-of-glass area, ft^2

U_{eg} = the thermal transmittance of the edge of the visible glass area including the effects of spacers in multiple glazed units, Btu/(h·ft^2·°F)

A_{eg} = the edge of the visible glass area, that is the 2.5 in. perimeter band adjacent to the frame, ft^2

U_f = the thermal transmittance of the frame area, Btu/(h·ft^2·°F)

A_f = the frame area that is the overall area of the entire glazing product minus the center-of-glass area and minus the edge-of-glass area, ft^2

(b) Values of U_{of} shall be based on one of the following methods:

(1) Results from laboratory test of center-of-glass, edge-of-glass, and frame assemblies tested as a unit at winter conditions. One of the procedures in Section 8.3.2 of RS–1 (incorporated by reference, see § 434.701) shall be used.

(2) Overall generic product C (commercial) in Table 13, Chapter 27, of the RS–4 (incorporated by reference, see § 434.701). The generic product C in Table 13, Chapter 27, is based on a product of 24 ft^2. Larger units will produce lower U-values and thus it is recommended to use the calculation procedure detailed in Equation 402.1.2.4a.

(3) Calculations based on the actual area for center-of-glass, edge-of-glass, and frame assemblies and on the thermal transmittance of components derived from 402.1.2.4a, 402.1.2.4b or a combination of the two.

402.1.3 *Gross Areas of Envelope Components.*

402.1.3.1 *Roof Assembly*. The gross area of a roof assembly shall consist of the total surface of the roof assembly exposed to outside air or unconditioned spaces and is measured from the exterior faces of exterior walls and centerline of walls separating buildings. The roof assembly includes all roof or ceiling components through which heat may flow between indoor and outdoor environments, including skylight surfaces but excluding service openings. For thermal transmittance purposes when return air ceiling plenums are employed, the roof or ceiling assembly shall not include the resistance of the ceiling or the plenum space as part of the total resistance of the assembly.

402.1.3.2 *Floor Assembly*. The gross area of a floor assembly over outside or unconditioned spaces shall consist of the total surface of the floor assembly exposed to outside air or unconditioned space and is measured from the exterior face of exterior walls and centerline of walls separating buildings. The floor assembly shall include all floor components through which heat may flow between indoor and outdoor or unconditioned space environments.

402.1.3.3 *Wall Assembly*. The gross area of exterior walls enclosing a heated or cooled space is measured on the exterior and consists of the opaque walls, including between-floor spandrels, peripheral edges of flooring, window

areas (including sash), and door areas but excluding vents, grilles, and pipes.

402.2 *Air Leakage and Moisture Mitigation*. The requirements of this section shall apply only to those building components that separate interior building conditioned space from the outdoors or from unconditioned space or crawl spaces. Compliance with the criteria for air leakage through building components shall be determined by tests conducted in accordance with RS–10 (incorporated by reference, see § 434.701).

402.2.1 *Air Barrier System*. A barrier against leakage shall be installed to prevent the leakage of air through the building envelope according to the following requirements:

(a) The air barrier shall be continuous at all plumbing and heating penetrations of the building opaque wall.

(b) The air barrier shall be sealed at all penetrations of the opaque building wall for electrical and telecommunications equipment.

TABLE 402.2.1—AIR LEAKAGE FOR FENESTRATION AND DOORS MAXIMUM ALLOWABLE INFILTRATION RATE

Component	Reference standard	cfm/lin ft Sash crack or cfm/ft² of area
Fenestration		
Aluminum:		
Operable	RS–11*	0.37 cfm/lin ft.
Jalousie	RS–11*	1.50 cfm/ft².
Fixed	RS–11*	0.15 cfm/ft².
Poly Vinyl Chloride (PVC):		
Prime Windows	RS–12*	0.37 cfm/ft².
Wood:		
Residential	RS–13*	0.37 cfm/ft².
Light Commercial	RS–13*	0.25 cfm/ft².
Heavy Commercial	RS–13*	0.15 cfm/ft².
Sliding Glass Doors:		
Aluminum	RS–11*	0.37 cfm/ft².
PVC	RS–12*	0.37 cfm/lin ft.
Doors—Wood:		
Residential	RS–14*	0.34 cfm/ft².
Light Commercial	RS–14*	0.25 cfm/ft².
Heavy Commercial	RS–14*	0.10 cfm/ft².
Commercial Entrance Doors	RS–10*	1.25 cfm/ft².
Residential Swinging Doors	RS–10*	0.50 cfm/ft².
Wall Sections Aluminum	RS–10*	0.06 cfm/ft².

NOTE: [The "Maximum Allowable Infiltration Rates" are from current standards to allow the use of available products.]

*Incorporated by reference, see § 434.701.

402.2.2 *Building Envelope*. The following areas of the building envelope shall be sealed, caulked, gasketed, or weatherstripped to limit air leakage:

(a) Intersections of the fenestration and door frames with the opaque wall sections.

(b) Openings between walls and foundations, between walls and roof and wall panels.

(c) Openings at penetrations of utility service through, roofs, walls, and floors.

(d) Site built fenestration and doors.

(e) All other openings in the building envelope.

Exceptions are as follows: Outside air intakes, exhaust outlets, relief outlets, stair shaft, elevator shaft smoke relief openings, and other similar elements shall comply with subsection 403.

402.2.2.1 Fenestration and Doors Fenestration and doors shall meet the requirements of Table 402.2.1.

402.2.2.2 *Building Assemblies Used as Ducts or Plenums*. Building assemblies used as ducts or plenums shall be sealed, caulked, and gasketed to limit air leakage.

402.2.2.3 *Vestibules*. A door that separates conditioned space from the exterior shall be equipped with an enclosed vestibule with all doors opening into and out of the vestibule equipped with self-closing devices. Vestibules shall be designed so that in passing through the vestibule, it is not necessary for the interior and exterior doors to open at the same time. Exceptions are as follows: Exterior doors need not be protected with a vestibule where:

(a) The door is a revolving door.

(b) The door is used primarily to facilitate vehicular movement or material handling.

(c) The door is not intended to be used as a general entrance door.

(d) The door opens directly from a dwelling unit.

(e) The door opens directly from a retail space less than 2,000 ft² in area, or from a space less than 1,500 ft² for other uses.

(f) In buildings less than three stories in building height in regions that have less than 6,300 heating degree days base 65 °F.

402.2.2.4 *Compliance Testing*. All buildings shall be tested after completion using the methodology in RS–11, (incorporated by reference, see § 434.701) or an equivalent approved method to determine the envelope air leakage. A standard blower door test is an acceptable technique to pressurize the building if the building is 5,000 ft² or less in

area. The buildings's air handling system can be used to pressurize the building if the building is larger than 5,000 ft^2. The following test conditions shall be:

(a) The measured envelope air leakage shall not exceed 1.57 pounds per square foot of wall area at a pressure difference of 0.3 inches water.

(b) At the time of testing, all windows and outside doors shall be installed and closed, all interior doors shall be open, and all air handlers and dampers shall be operable. The building shall be unoccupied.

(c) During the testing period, the average wind speed during the test shall be less than 6.6 feet per second, the average outside temperature greater than 59 °F, and the average inside-outside temperature difference is less than 41 °F.

402.2.2.5 *Moisture Migration.* The building envelope shall be designed to limit moisture migration that leads to deterioration in insulation or equipment performance as determined by the following construction practices:

(a) A vapor retarder shall be installed to retard, or slow down the rate of water vapor diffusion through the building envelope. The position of the vapor retarder shall be determined taking into account local climate and indoor humidity levels. The methodologies presented in Chapter 20 of RS–4 (incorporated by reference, see § 434.701) shall be used to determine temperature and water vapor profiles through the envelope systems to assess the potential for condensation within the envelope and to determine the position of the vapor retarder within the envelope system.

(b) The vapor retarder shall be installed over the entire building envelope.

(c) The perm rating requirements of the vapor retarder shall be determined using the methodologies contained in Chapter 20 of RS–4, (incorporated by reference, see § 434.701) and shall take into account local climate and indoor humidity level. The vapor retarder shall have a performance rating of 1 perm or less.

402.3 *Thermal Performance Criteria.*

402.3.1 *Roofs; Floors and Walls Adjacent to Unconditioned Spaces.* The area weighted average thermal transmittance of roofs and also of floors and walls adjacent to unconditioned spaces shall not exceed the criteria in Table 402.3.1a. Exceptions are as follows: Skylights for which daylight credit is taken may be excluded from the calculations of the roof assembly U_{or} if all of the following conditions are met:

(a) The opaque roof thermal transmittance is less than the criteria in Table 402.3.1b.

(b) Skylight areas, including framing, as a percentage of the roof area do not exceed the values specified in Table 402.3.1b. The maximum skylight area from Table 402.3.1b may be increased by 50% if a shading device is used that blocks over 50% of the solar gain during the peak cooling design condition. For shell buildings, the permitted skylight area shall be based on a light level of 30 foot candles and a lighting power density (LPD) of less than 1.0 w/ft^2. For speculative buildings, the permitted skylight area shall be based on the unit lighting power allowance from Table 401.3.2a and an illuminance level as follows: for LPD <1.0, use 30 footcandles; for 1.0 <LPD <2.5, use 50 footcandles; and for LPD ≥2.5, use 70 footcandles.

(c) All electric lighting fixtures within daylighted zones under skylights are controlled by automatic daylighting controls.

(d) The U_o of the skylight assembly including framing does not exceed_____Btu/(h·ft^2·°F) [Use 0.70 for ≤8000 HDD65 and 0.45 for >8000 HDD65 or both if the jurisdiction includes cities that are both below and above 8000 HDD65.]

(e) Skylight curb U-value does not exceed 0.21 Btu/(h·ft^2·°F).

(f) The infiltration coefficient of the skylights does not exceed 0.05 cfm/ft^2.

402.3.2 *Below-Grade Walls and Slabs-on-Grade.* The thermal resistance (R-value) of insulation for slabs-on-grade, or the overall thermal resistance of walls in contact with the earth, shall be equal to or greater than the values in Table 402.3.2.

402.4 *Exterior Walls.* Exterior walls shall comply with either 402.4.1 or 402.4.2.

402.4.1 *Prescriptive Criteria*. (a) The exterior wall shall be designed in accordance with subsections 402.4.1.1 and 402.4.1.2. When the internal load density range is not known, the 0–1.50 W/ft^2 range shall be used for residential, hotel/motel guest rooms, or warehouse occupancies; the 3.01–3.50 w/ft^2 range shall be used for retail stores smaller than 2,000 ft^2 and technical and vocational schools smaller than 10,000 ft^2; and the 1.51–3.00 W/ft^2 range shall be used for all other occupancies and building sizes. When the building envelope is designed or constructed prior to knowing the building occupancy type, an internal load density of _____ W/ft^2 shall be used. [Use 3.0 W/ft^2 for HDD65 <3000, 2.25 W/ft^2 for 3000 <HDD65 <6000, and 1.5 W/ft^2 for HDD65 >6000.]

(b) When more than one condition exists, area weighted averages shall be used. This requirement shall apply to all thermal transmittances, shading coefficients, projection factors, and internal load densities rounded to the same number of decimal places as shown in the respective table.

402.4.1.1 *Opaque Walls*. The weighted average thermal transmittance (U-value) of opaque wall elements shall be less than the values in Table 402.4.1.1. For mass walls (HC ≥5), criteria are presented for low and high window/wall ratios and the criteria shall be determined by interpolating between these values for the window/wall ratio of the building.

402.4.1.2 *Fenestration*. The design of the fenestration shall meet the criteria of Table 402.4.1.2. When the fenestration columns labeled ''Perimeter Daylighting'' are used, automatic daylighting controls shall be installed in the perimeter daylighted zones of the building. These daylighting controls shall be capable of reducing electric lighting power to at least 50% of full power. Only those shading or lighting controls for perimeter daylighting that are shown on the plans shall be considered. The column labeled ''VLT >= SC'' shall be used only when the shading coefficient of the glass is less than its visible light transmittance.

APPENDIX A

The example Alternate Component Package tables illustrate the requirements of subsections 434.301.1, 434.402.3.1, 434.402.3.2, 434.402.4.1.1 and 434.402.4.1.2. Copies of specific tables contained in this appendix A can be obtained from the Energy Code for Federal Commercial Buildings, Docket No. EE–RM–79–112–C, EE–43, Office of Building Research and Standards, U.S. Department of Energy, Room 1J–018, 1000 Independence Avenue, SW., Washington, DC 20585, (202) 586–9127.

10CFR 434 - Federal Commercial Building Energy Code - May 1995

Miami, FL #136

TABLE 402.4.1.2 MAXIMUM WINDOW WALL RATIO (WWR)

Internal Load Density (ILD) Range	Projection Factor (PF) Range	Shading Coefficient (SCx) Range	Fenestration U-Factor (Uof) Base Case 1.23 to 0.73	Base Case 0.72 to 0.00	Base Case N/A	Perimeter Daylighting 1.23 to 0.73	Perimeter Daylighting 0.72 to 0.00	Perimeter Daylighting VLT>=SC 0.72 to 0.00
0.00 - 1.50	0.00 - 0.25	1.00 - 0.72	15	15		17	17	18
		0.71 - 0.61	19	18		22	21	22
		0.60 - 0.51	23	22		27	26	27
		0.50 - 0.39	29	28		34	32	34
		0.38 - 0.26	42	39		50	46	48
		0.25 - 0.00	82	70		99	81	84
	0.26 - 0.50	1.00 - 0.72	22	21		26	25	26
		0.71 - 0.61	29	27		34	32	33
		0.60 - 0.51	36	34		43	40	41
		0.50 - 0.39	46	42		56	50	52
		0.38 - 0.00	71	62		86	73	75
	0.50 +	1.00 - 0.72	31	30		37	35	36
		0.71 - 0.61	41	38		49	45	47
		0.60 - 0.51	53	48		64	57	58
		0.50 - 0.00	71	62		86	73	75
1.51 - 3.00	0.00 - 0.25	1.00 - 0.72	12	12		20	19	21
		0.71 - 0.61	16	15		26	25	27
		0.60 - 0.51	19	19		32	30	33
		0.50 - 0.39	24	23		41	38	41
		0.38 - 0.26	34	32		62	54	57
		0.25 - 0.00	66	57		99	90	99
	0.26 - 0.50	1.00 - 0.72	18	18		31	29	32
		0.71 - 0.61	24	23		41	37	40
		0.60 - 0.51	29	28		52	46	49
		0.50 - 0.39	37	35		68	59	62
		0.38 - 0.00	57	50		99	83	89
	0.50 +	1.00 - 0.72	25	24		45	41	44
		0.71 - 0.61	33	31		60	53	56
		0.60 - 0.51	42	39		77	67	70
		0.50 - 0.00	56	50		99	82	89
3.01 - 3.50	0.00 - 0.25	1.00 - 0.72	9	9		18	17	20
		0.71 - 0.61	12	12		23	22	26
		0.60 - 0.51	15	14		29	27	31
		0.50 - 0.39	18	17		37	34	39
		0.38 - 0.26	26	24		57	49	55
		0.25 - 0.00	48	43		99	83	93
	0.26 - 0.50	1.00 - 0.72	14	13		28	26	30
		0.71 - 0.61	18	17		37	34	38
		0.60 - 0.51	22	21		47	42	47
		0.50 - 0.39	28	26		63	54	60
		0.38 - 0.00	42	38		92	77	85
	0.50 +	1.00 - 0.72	19	18		41	37	41
		0.71 - 0.61	25	24		55	49	54
		0.60 - 0.51	31	29		71	62	67
		0.50 - 0.00	41	37		92	76	84

10CFR 434 - Federal Commercial Building Energy Code - May 1995

Miami, FL #136

TABLE 301.1 EXTERIOR DESIGN CONDITIONS

WINTER Design Dry Bulb: 44°F;	HDD65: 185
SUMMER Design Dry Bulb: 90°F; Mean Coincident Wet Bulb: 77°F;	CDD65: 4045
Annual Operating Hours, 8AM - 4PM when 55°F<=T<=69°F: 259	

TABLE 402.3.1(A) MAX. THERMAL TRANSMITTANCE (U)

Roof	0.075
Wall adjacent to unconditioned space	1.000
Floor over unconditioned space	0.400

TABLE 402.3.1(B) MAX. EXEMPT SKYLIGHT AREA AS % OF ROOF AREA

Visible Light Transmittance (VLT)	Light level Ft. Candles	Range of Lighting Power Densities <1.00	1.00 - 1.50	1.51 - 2.00	>2.00
0.75	30	2.3	3.1	3.9	4.7
	50	3.1	4.3	5.5	6.7
	70	4.3	5.5	6.7	7.9
0.50	30	3.6	4.8	6.0	7.2
	50	4.8	6.6	8.4	10.2
	70	6.6	8.4	10.2	12.0

TABLE 402.3.2 MINIMUM THERMAL RESISTANCE (R-VALUE)

Slab on grade: Unheated / Heated:	24 inches	36 inches	48 inches
Horizontal	R-0/R-2	R-0/R-2	R-0/R-2
Vertical	R-0/R-2	R-0/R-2	R-0/R-2
Wall below grade:	R-0		

TABLE 402.4.1.1 MAX. WALL THERMAL TRANSMITTANCE (Uow)

ILD Range	WWR	HC Range	Insulation Position Interior/Integral	Exterior
All	0 to 100	0.0 - 4.9	1.000	1.000
0.00 to 1.50	15	5.0 - 9.9	1.000	1.000
		10.0 - 14.9	1.000	1.000
		15.0 +	1.000	1.000
	99	5.0 - 9.9	1.000	1.000
		10.0 - 14.9	1.000	1.000
		15.0 +	1.000	1.000
1.51 to 3.00	12	5.0 - 9.9	1.000	1.000
		10.0 - 14.9	1.000	1.000
		15.0 +	1.000	1.000
	99	5.0 - 9.9	1.000	1.000
		10.0 - 14.9	1.000	1.000
		15.0 +	1.000	1.000
3.01 to 3.50	9	5.0 - 9.9	1.000	1.000
		10.0 - 14.9	1.000	1.000
		15.0 +	1.000	1.000
	93	5.0 - 9.9	1.000	1.000
		10.0 - 14.9	1.000	1.000
		15.0 +	1.000	1.000

402.4.2 *System Performance Criteria.* The cumulative annual energy flux attributable to thermal transmittance and solar gains shall be less than the criteria determined using the ENVSTD24 computer program in Standard 90.1–1989, or the equations in RS–1, (incorporated by reference, see § 434.701) Attachment 8–B. The cumulative annual energy flux shall be calculated using the ENVSTD24 computer program or the equations in RS–1, (incorporated by reference, see § 434.701) Attachment 8–B.

TABLE 402.4.2—EQUIP DEFAULT VALUES FOR ENVSTD24

Occupancy	Default equipment power density [1]	Default occupant load adjustment [1]	Default adjusted equipment power density
Assembly	0.25	0.75	1.00
Health/Institutional	1.00	−0.26	0.74
Hotel/Motel	0.25	−0.33	0.00
Warehouse/Storage	0.10	−0.60	0.00
Multi-Family High Rise	0.75	N/A	0.00
Office	0.75	−0.35	0.40
Restaurant	0.10	0.07	0.17
Retail	0.25	−0.38	0.00
School	0.50	0.30	0.80

[1] Defaults as defined in Section 8.6.10.5, Table 8–4, and Sections 8.6.10.6 and 13.7.2.1, Table 13–2 from RS–1 (incorporated by reference, see § 434.701).

402.4.2.1 *Equipment Power Density (EQUIP)*. The equipment power density used in the ENVSTD24 computer program shall use the actual equipment power density from the building plans and specifications or be taken from Table 402.4.2 using the column titled ''Default Adjusted Equipment Power Density'' or calculated for the building using the procedures of RS–1. (incorporated by reference, see § 434.701). The program limits consideration of the equipment power density to a maximum of 1 W/ft^2.

402.4.2.2 *Lighting Power Density (LIGHTS)*. The lighting power density used in the ENVSTD24 computer program shall use the actual lighting power density from the building plans and specifications or the appropriate value from Tables 401.3.2a, b, c, or d.

402.4.2.3 *Daylighting Control Credit Fraction (DLCF)*. When the daylighting control credit fraction is other than zero, automatic daylighting controls shall be installed in the appropriate perimeter zones(s) of the building to justify the credit.

§ 434.403 Building mechanical systems and equipment.

Mechanical systems and equipment used to provide heating, ventilating, and air conditioning functions as well as additional functions not related to space conditioning, such as, but not limited to, freeze protection in fire projection systems and water heating, shall meet the requirements of this section.

403.1 *Mechanical Equipment Efficiency*. When equipment shown in Tables 403.1a through 403.1f is used, it shall have a minimum performance at the specified rating conditions when tested in accordance with the specified reference standard. The reference standards listed in Tables 403.1a through 403.1f are incorporated by reference, see § 434.701. Omission of minimum performance requirements for equipment not listed in Tables 403.1a through 403.1f does not preclude use of such equipment.

TABLE 403.1A—UNITARY AIR CONDITIONERS AND CONDENSING UNITS, ELECTRICALLY OPERATED, MINIMUM EFFICIENCY REQUIREMENTS

Equipment type	Size category	Subcategory or rating condition	Minimum Efficiency [2]	Test procedure [1]
Air Conditioners, Air Cooled.	<65,000 Btu/h	Split system	10.0 SEER	ARI 210/240 (RS–15)*
		Single Package	9.7 SEER	
	≥65,000 Btu/h and <135,00. Btu/h	Split System and Single Package	8.9 EER [3] 8.3 IPLV [3]	ARI 210/240 (RS–15)*
	≥135,000 Btu/h and <240,000 Btu/h.	Split System and Single Package	8.5 EER[3] 7.5 IPLV[3].	
	≥240,000 Btu/h and <760,000 Btu/h.	Split System and Single Package	8.5 EER[3] 7.5 IPLV[3]	ARI–340/360 (RS–16)*
	≥760,000 Btu/h	Split System and Package	8.3 EER[3] 7.5 IPLV[3]	ARI–340/360 (RS–16)*
Air Conditioners, Water and Evaporatively Cooled.	<65,000 Btu/h	Split System and Single Package	9.3 EER[3] 8.4 IPLV[3]	ARI 210/240 (RS–15)*
	≥65,000 Btu/h and <135,000 Btu/h.	Split System and Single Package	10.5 EER[c] 9.7 IPLV[c]	ARI 210/240 (RS–15)*
	≥135,000 Btu/h and <240,000 Btu/h.	Split System and Single Package	9.6 EER[c] 9.0 IPLV[c]	ARI–340/360 (RS–16)*
	≥240,000 Btu/h	Split System and Single Package	9.6 EER[c] 9.0 IPLV[c]	ARI–340/360 (RS–16)*
Condensing Units, Air Cooled.	135,000 Btu/h		9.9 EER 11.0 IPLV	ARI 365 (RS–29)*

TABLE 403.1A—UNITARY AIR CONDITIONERS AND CONDENSING UNITS, ELECTRICALLY OPERATED, MINIMUM EFFICIENCY REQUIREMENTS—Continued

Equipment type	Size category	Subcategory or rating condition	Minimum Efficiency [2]	Test procedure [1]
Condensing Units, Water or Evaporatively Cooled.	135,000 Btu/h		12.9 EER 12.9 IPLV	ARI 365 (RS–29)*

[1] See subpart E for detailed references
[2] IPLVs are only applicable to equipment with capacity modulation.
[3] Deduct 0.2 from the required EERs and IPLVs for units that have a heating section.
* Incorporation by reference, see § 434.701

TABLE 403.1B—UNITARY AND APPLIED HEAT PUMPS, ELECTRICALLY OPERATED, MINIMUM EFFICIENCY REQUIREMENTS

Equipment type	Size category	Subcategory or rating condition	Minimum efficiency [2]	Test procedure [1]
Air Cooled (Cooling Mode).	<65,000 Btu/h	Split System	10.0 SEER	ARI 210/240
		Single Package	9.7 SEER	(RS–15)*
	≥65,000 Btu/h and <135,000 Btu/h.	Split System and Single Package.	8.9 EER [3] 8.3 IPLV [3]	ARI 210/240 (RS–15)*
	≥135,000 Btu/h and <240,000 Btu/h.	Split System and Single Package.	8.5 EER [3] 7.5 IPLV [3]	ARI–340/360 (RS–16)*
	≥240,000 Btu/h	Split System and Single Package.	8.5 EER [3] 7.5 IPLV [3]	ARI–340/360 (RS–16)*
Water Source (Cooling Mode)	<65,000 Btu/h	85 °F Entering Water	9.3 EER	ARI–320
		75 °F Entering Water	10.2 EER	(RS–27)*
	≥65,000 Btu/h and <135,000 Btu/h	85 °F Entering Water	10.5 EER	ARI–320
		75 °F Entering Water	11.0 EER	(RS–27)*
Groundwater-Source (Cooling Mode).	<135,000 Btu/h	70 F Entering Water	11.0 EER	ARI 325
		50 F Entering Water	11.5 EER	(RS–28)*
Ground Source (Cooling Mode).	<135,000 Btu/h	77 F Entering Water	10.0 EER	ARI 325
		70 F Entering Water	10.4 EER	(RS–28)*
Air Cooled (Heating Mode).	<65,000 Btu/h (Cooling Capacity).	Split System	6.8 HSPF	ARI 210/240
		Single Package	6.6 HSPF	(RS–15)*
	65,000 Btu/h and <135,000 Btu/h (Cooling Capacity).	47 F db/43 F wb Outdoor Air	3.00 COP	ARI 210/240
		17 F db/15 F wb Outdoor Air	2.00 COP	(RS–15)*
	135,000 Btu/h (Cooling Capacity).	47 F db/43 F wb Outdoor Air	2.90 COP	ARI–340/360
		17 F db/15 F wb Outdoor	2.00 COP	(RS–1/)*
Water-Source (Heating Mode).	<135,000 Btu/h (Cooling Capacity).	70 F Entering Water	3.80 COP	ARI–320
		75 F Entering Water	3.90 COP	(RS–27)*
Groundwater-Source (Heating Mode).	<135,000 Btu/h (Cooling Capacity).	70 F Entering Water	3.40 COP	ARI 325
		50 F Entering Water	3.00 COP	(RS–28)*
Ground Source (Heating Mode).	<135,000 Btu/h (Cooling Capacity).	32 F Entering Water	2.50 EER	ARI–330
		41 F Entering Water	2.70 EER	(RS–45)*

[1] See subpart E for detailed references.
[2] IPLVs are only applicable to equipment with capacity modulation.
[3] Deduct 0.2 from the required EERs and IPLVs for units that have a heating section.
* Incorporation by reference, see § 434.701.

TABLE 403.1C—WATER CHILLING PACKAGES, MINIMUM EFFICIENCY REQUIREMENTS

Equipment type	Size category	Subcategory or rating condition	Minimum efficiency [2]	Test procedure [1]
Air-Cooled, With Condenser, Electrically Operated.	<150 Tons	2.70 COP	2.50 COP	ARI 550 Centrifugal/ Rotary Screw (RS–30)* or ARI 590 Reciprocating (RS–31)*
	≥150 Tons	2.80 IPLV	2.50 IPLV	
Air-Cooled, Without Condenser, Electrically Operated.	All Capacities		3.10 COP 3.20 IPLV	
Water Cooled, Electrically Operated, Positive Displacement (Reciprocating).	All Capacities		3.80 COP 3.90 IPLV	
Water Cooled, Electrically Operated, Positive Displacement (Rotary Screw and Scroll).	<150 Tons		3.80 COP 3.90 IPLV	
	≥150 Tons and <300 Tons.	.	4.20 COP 4.50 IPLV	
	≥300 Tons		5.20 COP 5.30 IPLV	

TABLE 403.1C—WATER CHILLING PACKAGES, MINIMUM EFFICIENCY REQUIREMENTS—Continued

Equipment type	Size category	Subcategory or rating condition	Minimum efficiency [2]	Test procedure [1]
Water-Cooled, Electrically Operated, Centrifugal.	<150 Tons		3.80 COP	ARI 550 (RS–30)*
			3.90 IPLV	
	150 Tons and <300 Tons.		4.20 COP	
			4.50 IPLV	
	300 Tons		5.20 COP	
			5.30 IPLV	
Absorption Single Effect	All Capacities		0.48 COP.	
Absorption Double Effect, Indirect-Fired.	All Capacities		0.95 COP	ARI 560 (RS–46)*
			1.00 IPLV	
Absorption Double-Effect, Direct-Fired.	All Capacities		0.95 COP	
			1.00 IPLV	

[1] See subpart E for detailed references.
[2] Equipment must comply with all efficiencies when multiple efficiencies are indicated.
*Incorporation by reference, see § 434.701.

TABLE 403.1D—PACKAGED TERMINAL AIR CONDITIONERS, PACKAGED TERMINAL HEAT PUMPS, ROOM AIR CONDITIONERS, AND ROOM AIR-CONDITIONER HEAT PUMPS ELECTRICALLY OPERATED, MINIMUM EFFICIENCY REQUIREMENTS

Equipment type	Size category	Subcategory or rating condition	Minimum efficiency [2]	Test procedure [1]
PTAC (Cooling Mode)	All Capacities	95 °F db Outdoor Air	10.0– (0.16 × Cap/1,000) [3]EER.	ARI 310/380 (RS–17)*
		82 °F db Outdoor Air	12.2–(0.20 × Cap/1,000) [3]EER.	ARI 310/380 (RS–17)*
PTHP (Cooling Mode)	All Capacities	95 °F db Outdoor Air	10.0–(0.16 × Cap/1,000) [3] EER.	
		82 °F db Outdoor Air	12.2–(0.20 × Cap/1,000) EER.	
PTHP (Heating Mode)	All Capacities		2.90–(0.026 × CAP/1,000) [3] COP.	
Room Air Conditioners, With Louvered Sides.	<6,000 Btu/h		8.0 EER	ANSI/AHAM RAC–1 (RS–40)*
	≥6,000 Btu/h and <8,000 Btu/h.		8.5 EER	
	≥8,000 Btu/h and <14,000 Btu/h.		9.0 EER	
	≥14,000 Btu/h and <20,000 Btu/h.		8.8 EER	
	≥20,000 Btu/h		8.2 EER	
Room Air Conditioner, Without Louvered Sides.	<6,000 Btu/h		8.0 EER	ANSI/AHAM RAC–1 (RS–40)*
	≥6,000 Btu/h and <20,000 Btu/h.		8.5 EER	
	≥20,000 Btu/h		8.2 EER	
Room Air-Conditioner Heat Pumps With Louvered Sides.	All Capacities		8.5 EER	ANSI/AHAM RAC–1 (RS–40)*
Room Air-Conditioner Heat Pumps Without Louvered Sides.	All Capacities		8.0 EER	ANSI/AHAM RAC–1 (RS–40*

[1] See subpart E for detailed references.
[2] Equipment must comply with all efficiencies when multiple efficiencies are indicated. (Note products covered by the 1992 Energy Policy Act have no efficiency requirement for operation at other than standard rating conditions for products manufactured after 1/1/94).
[3] Cap means the rated capacity of the product in Btu/h. If the unit's capacity is less than 7,000 Btu/h, use 7,000 Btu/h in the calculation. If the unit's capacity is greater than 15,000 Btu/h, use 15,000 Btu/h in the calculation.
* Incorporation by reference, see § 434.701.

TABLE 403.1E—WARM AIR FURNACES AND COMBINATION WARM AIR FURNACES/AIR CONDITIONING UNITS, WARM AIR DUCT FURNACES AND UNIT HEATERS, MINIMUM EFFICIENCY REQUIREMENTS

Equipment type	Size category	Subcategory or rating condition	Minimum efficiency[b e]	Test procedure [a]
Warm Air-Furnace, Gas-Fired	<225,000 Btu/h		78% AFUE or 80% E_t.	DOE 10 CFR 430 Appendix N
	≥225,000 Btu/h	Maximum Capacity [c]	80% E_t	ANSI Z21.47 (RS–21)*
		Minimum Capacity[c]	78% E_t	
Warm Air-Furnace, Oil-Fired	<225,000 Btu/h		78% AFUE or 80% E_t[d].	DOE 10 CFR 430 Appendix N

TABLE 403.1E—WARM AIR FURNACES AND COMBINATION WARM AIR FURNACES/AIR CONDITIONING UNITS, WARM AIR DUCT FURNACES AND UNIT HEATERS, MINIMUM EFFICIENCY REQUIREMENTS—Continued

Equipment type	Size category	Subcategory or rating condition	Minimum efficiency[b e]	Test procedure[a]
	≥225,000 But/h	Maximum Capacity[c]	81% E_t	U.L. 727
		Minimum Capacity	81% E_t	(RS–22)*
Warm Air Duct Furnaces, Gas-Fired.	All Capacities	Maximum Capacity[c]	78% E_t	ANSI Z83.9
		Minimum Capacity	75% E_t	(RS–23)
Warm Air Unit Heaters, Gas Fired.	All Capacities	Maximum Capacity[c]	78% E_t	ANSI Z83.8
		Minimum Capacity	74% E_t	(RS–24)*
Oil-Fired	All Capacities	Maximum Capacity[c]	81% E_t	U.L. 731
		Minimum Capacity	81% E_t	(RS–25)*

[a] See subpart E for detailed references.
[b] Minimum and maximum ratings as provided for and allowed by the unit's controls.
[c] Combination units not covered by NAECA (Three-phase power or cooling capacity ≥65,000 Btu/h) may comply with either rating.
[d] E_t = thermal efficiency. See referenced document for detailed discussion.
[e] E_c = combustion efficiency. Units must also include an IID and either power venting or a flue damper. For those furnaces where combustion air is drawn from the conditioned space, a vent damper may be substituted for a flue damper.
* Incorporation by reference, see § 434.701

TABLE 403.1F—BOILERS, GAS- AND OIL-FIRED, MINIMUM EFFICIENCY REQUIREMENTS

Equipment type	Size category	Subcategory or rating condition	Minimum efficiency[b]	Test procedure[a]
Boilers, Gas-Fired	<300,000 Btu/h	Hot Water	80% AGUE	DOE 10 CFR 430 Appendix N
		Steam	75% AGUE	DOE 10 CFR 430 Appendix N
	<300,000 Btu/h	Maximum Capacity[c]	80% E_c	ANSI Z21.13
		Minimum Capacity	80% E_c	(RS–32)*
Boilers, Oil-Fired	<300,000 Btu/h		80% AGUE	DOE 10 CFR 430 (RS–20)*
	<300,000 Btu/h	Maximum Capacity[c]	83% E_c	U.L. 726
		Minimum Capacity	83% E_c	(RS–33)*
Oil-Fired (Residual)	<3000,000 Btu/h	Maximum Capacity[c]	83% E_c	
		Minimum Capacity	83% E_c.	

[a] See subpart E for detailed references.
[b] Minimum and maximum ratings as provided for and allowed by the unit's controls.
[c] E_c = combustion efficiency (100% less flue losses). See reference document for detailed information.
* Incorporation by reference, see § 434.701.

403.1.1 Where multiple rating conditions and/or performance requirements are provided, the equipment shall satisfy all stated requirements.

403.1.2 Equipment used to provide water heating functions as part of a combination integrated system shall satisfy all stated requirements for the appropriate space heating or cooling category.

403.1.3 The equipment efficiency shall be supported by data furnished by the manufacturer or shall be certified under a nationally recognized certification program or rating procedure.

403.1.4 Where components, such as indoor or outdoor coils, from different manufacturers are used, the system designer shall specify component efficiencies whose combined efficiency meets the standards herein.

403.2 *HVAC Systems.*

403.2.1 *Load Calculations.* Heating and cooling system design loads for the purpose of sizing systems and equipment shall be determined in accordance with the procedures described in RS–1 (incorporated by reference, see § 434.701) using the design parameters specified in subpart C of this part.

403.2.2 *Equipment and System Sizing.* Heating and cooling equipment and systems shall be sized to provide no more than the loads calculated in accordance with subsection 403.2.1. A single piece of equipment providing both heating and cooling must satisfy this provision for one function with the other function sized as small as possible to meet the load, within available equipment options. Exceptions are as follows:

(a) When the equipment selected is the smallest size needed to meet the load within available options of the desired equipment line.

(b) Standby equipment provided with controls and devices that allow such equipment to operate automatically only when the primary equipment is not operating.

(c) Multiple units of the same equipment type with combined capacities exceeding the design load and provided with controls that sequence or otherwise optimally control the operation of each unit based on load.

403.2.3 *Separate Air Distribution System.* Zones with special process temperature and/or humidity requirements shall be served by air distribution systems separate from those serving zones requiring only comfort conditions or shall include supplementary provisions so that the primary systems may be specifically controlled for comfort purposes only. Exceptions: Zones requiring only comfort heating or comfort cooling that are served by a system primarily used for process temperature and humidity control need not be served by a separate system if the total supply air to these comfort zones is no more than 25% of the total system supply air or the total conditioned floor area of the zones is less than 1000 ft2.

403.2.4 *Ventilation and Fan System Design.* Ventilation systems shall be designed to be capable of reducing the supply of outdoor air to the minimum ventilation rates required by Section 6.1.3 of RS–41 (incorporated by reference, see § 434.701) through the use of return ducts, manually or automatically operated control dampers, fan volume controls, or other devices. Exceptions are as follows: Minimum outdoor air rates may be greater if:

(a) Required to make up air exhausted for source control of contaminants such as in a fume hood.

(b) Required by process systems.

(c) Required to maintain a slightly positive building pressure. For this purpose, minimum outside air intake may be increased up to no greater than 0.30 air changes per hour in excess of exhaust quantities.

403.2.4.1 *Ventilation controls for variable or high occupancy areas.* Systems with design outside air capacities greater than 3,000 cfm serving areas having an average design occupancy density exceeding 100 people per 1,000 ft^2 shall include means to automatically reduce outside air intake to the minimum values required by RS–41 (incorporated by reference, see § 434.701) during unoccupied or low-occupancy periods. Outside air shall not be reduced below 0.14 cfm/ft^2. Outside air intake shall be controlled by one or more of the following:

(a) A clearly labeled, readily accessible bypass timer that may be used by occupants or operating personnel to temporarily increase minimum outside air flow up to design levels.

(b) A carbon dioxide (CO_2) control system having sensors located in the spaces served, or in the return air from the spaces served, capable of maintaining space CO_2 concentrations below levels recommended by the manufacturer, but no fewer than one sensor per 25,000 ft^2 of occupied space shall be provided.

(c) An automatic timeclock that can be programmed to maintain minimum outside air intake levels commensurate with scheduled occupancy levels.

(d) Spaces equipped with occupancy sensors.

403.2.4.2 *Ventilation Controls for enclosed parking garages.* Garage ventilation fan systems with a total design capacity greater than 30,000 cfm shall have automatic controls that stage fans or modulate fan volume as required to maintain carbon monoxide (CO) below levels recommended in RS–41.

403.2.4.3 *Ventilation and Fan Power.* The fan system energy demand of each HVAC system at design conditions shall not exceed 0.8 W/cfm of supply air for constant air volume systems and 1.25 W/cfm of supply air for variable-air-volume (VAV) systems. Fan system energy demand shall not include the additional power required by air treatment or filtering systems with pressure drops over 1 in. w.c. Individual VAV fans with motors 75 hp and larger shall include controls and devices necessary for the fan motor to demand no more than 30 percent of design wattage at 50 percent of design air volume, based on manufacturer's test data. Exceptions are as follows:

(a) Systems with total fan system motor horsepower of 10 hp or less.

(b) Unitary equipment for which the energy used by the fan is considered in the efficiency ratings of subsection 403.1.

403.2.5 *Pumping System Design*. HVAC pumping systems used for comfort heating and/or comfort air conditioning that serve control valves designed to modulate or step open and closed as a function of load shall be designed for variable fluid flow and capable of reducing system flow to 50 percent of design flow or less. Exceptions are as follows:

(a) Systems where a minimum flow greater than 50% of the design flow is required for the proper operation of equipment served by the system, such as chillers.

(b) Systems that serve no more than one control valve.

(c) Systems with a total pump system horse power ≤10 hp.

(d) Systems that comply with subsection 403.2.6.8 without exception.

403.2.6 *Temperature and Humidity Controls*.

403.2.6.1 *System Controls*. Each heating and cooling system shall include at least one temperature control device.

403.2.6.2 *Zone Controls*. The supply of heating and cooling energy to each zone shall be controlled by individual thermostatic controls responding to temperature within the zone. For the purposes of this section, a dwelling unit is considered a zone. Exceptions are as follows: Independent perimeter systems that are designed to offset building envelope heat losses or gains or both may serve one or more zones also served by an interior system when the perimeter system includes at least one thermostatic control zone for each building exposure having exterior walls facing only one orientation for at least 50 contiguous ft and the perimeter system heating and cooling supply is controlled by thermostat(s) located within the zone(s) served by the system.

403.2.6.3 *Zone Thermostatic Control Capabilities*. Where used to control comfort heating, zone thermostatic controls shall be capable of being set locally or remotely by adjustment or selection of sensors down to 55 °F or lower. Where used to control comfort cooling, zone thermostatic controls shall be capable of being set locally or remotely by adjustment or selection of sensors up to 85 °F or higher. Where used to control both comfort heating and cooling, zone thermostatic controls shall be capable of providing a temperature range or deadband of at least 5 °F within which the supply of heating and cooling energy to the zone is shut off or reduced to a minimum. Exceptions are as follows:

(a) Special occupancy or special usage conditions approved by the building official or

(b) Thermostats that require manual changeover between heating and cooling modes.

403.2.6.4 *Heat Pump Auxiliary Heat*. Heat pumps having supplementary electric resistance heaters shall have controls that prevent heater operation when the heating load can be met by the heat pump. Supplemental heater operation is permitted during outdoor coil defrost cycles not exceeding 15 minutes.

403.2.6.5 *Humidistats*. Humidistats used for comfort purposes shall be capable of being set to prevent the use of fossil fuel or electricity to reduce relative humidity below 60% or increase relative humidity above 30%.

403.2.6.6 *Simultaneous Heating and Cooling*. Zone thermostatic and humidistatic controls shall be capable of operating in sequence the supply of heating and cooling energy to the zone. Such controls shall prevent: Reheating; recooling; mixing or simultaneous supply of air that has been previously mechanically heated and air that has been previously cooled, either by mechanical refrigeration or by economizer systems; and other simultaneous operation of heating and cooling systems to the same zone. Exceptions are as follows:

(a) Variable-air-volume systems that, during periods of occupancy, are designed to reduce the air supply to each zone to a minimum before heating, recooling, or mixing takes place. This minimum volume shall be no greater than the larger of 30% of the peak supply volume, the minimum required to meet minimum ventilation requirements of the Federal agency. (0.4 cfm/

ft^2 of zone conditioned floor area, and 300 cfm).

(b) Zones where special pressurization relationships or cross-contamination requirements are such that variable-air-volume systems are impractical, such as isolation rooms, operating areas of hospitals and clean rooms.

(c) At least 75% of the energy for reheating or for providing warm air in mixing systems is provided from a site-recovered or site-solar energy source.

(d) Zones where specified humidity levels are required to satisfy process needs, such as computer rooms and museums.

(e) Zones with a peak supply air quantity of 300 cfm or less.

403.2.6.7 *Temperature Reset for Air Systems.* Air systems supplying heated or cooled air to multiple zones shall include controls that automatically reset supply air temperatures by representative building loads or by outside air temperature. Temperature shall be reset by at least 25% of the design supply air to room air temperature difference. Zones that are expected to experience relatively constant loads, such as interior zones, shall be designed for the fully reset supply temperature. Exception are as follows: Systems that comply with subsection 403.2.6.6 without using exceptions (a) or (b).

403.2.6.8 *Temperature Reset for Hydronic Systems.* Hydronic systems of at least 600,000 Btu/hr design capacity supplying heated and/or chilled water to comfort conditioning systems shall include controls that automatically reset supply water temperatures by representative building loads (including return water temperature) or by outside air temperature. Temperature shall be reset by at least 25% of the design supply-to-return water temperature difference. Exceptions are as follows:

(a) Systems that comply with subsection 403.2.5 without exception or

(b) Where the design engineer certifies to the building official that supply temperature reset controls cannot be implemented without causing improper operation of heating, cooling, humidification, or dehumidification systems.

403.2.7 *Off Hour Controls.*

403.2.7.1 *Automatic Setback or Shutdown Controls.* HVAC systems shall be equipped with automatic controls capable of accomplishing a reduction of energy use through control setback or equipment shutdown. Exceptions are as follows:

(a) Systems serving areas expected to operate continuously or

(b) Equipment with full load demands not exceeding 2 kW controlled by readily accessible, manual off-hour controls.

403.2.7.2 *Shutoff Dampers.* Outdoor air supply and exhaust systems shall be provided with motorized or gravity dampers or other means of automatic volume shutoff or reduction. Exceptions are as follows:

(a) Systems serving areas expected to operate continuously.

(b) Individual systems which have a design airflow rate or 3000 cfm or less.

(c) Gravity and other non-electrical ventilation systems controlled by readily accessible, manual damper controls.

(d) Where restricted by health and life safety codes.

403.2.7.3 Zone Isolation systems that serve zones that can be expected to operate nonsimultaneously for more than 750 hours per year shall include isolation devices and controls to shut off or set back the supply of heating and cooling to each zone independently. Isolation is not required for zones expected to operate continuously or expected to be inoperative only when all other zones are inoperative. For buildings where occupancy patterns are not known at the time of system design, such as speculative buildings, the designer may predesignate isolation areas. The grouping of zones on one floor into a single isolation area shall be permitted when the total conditioned floor area does not exceed 25,000 ft^2 per group.

403.2.8 *Economizer Controls.*

403.2.8.1 Each fan system shall be designed and capable of being controlled to take advantage of favorable weather conditions to reduce mechanical cooling requirements. The system shall include either: A temperature or enthalpy air economizer system that is capable of automatically modulating outside air and return air dampers to

provide up to 85% of the design supply air quantity as outside air, or a water economizer system that is capable of cooling supply air by direct and/or indirect evaporation and is capable of providing 100% of the expected system cooling load at outside air temperatures of 50 °F dry-bulb/45 °F wet-bulb and below. Exceptions are as follows:

(a) Individual fan-cooling units with a supply capacity of less than 3000 cfm or a total cooling capacity less than 90,000 Btu/h.

(b) Systems with air-cooled or evaporatively cooled condensers that include extensive filtering equipment provided in order to meet the requirements of RS–41 (incorporated by reference, see § 434.701).

(c) Systems with air-cooled or evaporatively cooled condensers where the design engineer certifies to the building official that use of outdoor air cooling affects the operation of other systems, such as humidification, dehumidification, and supermarket refrigeration systems, so as to increase overall energy usage.

(d) Systems that serve envelope-dominated spaces whose sensible cooling load at design conditions, excluding transmission and infiltration loads, is less than or equal to transmission and infiltration losses at an outdoor temperature of 60 °F.

(e) Systems serving residential spaces and hotel or motel rooms.

(f) Systems for which at least 75% of the annual energy used for mechanical cooling is provided from a site-recovered or site-solar energy source.

(g) The zone(s) served by the system each have operable openings (windows, doors, etc.) with an openable area greater than 5% of the conditioned floor area. This applies only to spaces open to and within 20 ft of the operable openings. Automatic controls shall be provided that lock out system mechanical cooling to these zones when outdoor air temperatures are less than 60 °F.

403.2.8.2 Economizer systems shall be capable of providing partial cooling even when additional mechanical cooling is required to meet the remainder of the cooling load. Exceptions are as follows:

(a) Direct-expansion systems may include controls to reduce the quantity of outdoor air as required to prevent coil frosting at the lowest step of compressor unloading. Individual direct-expansion units that have a cooling capacity of 180,000 Btu/h or less may use economizer controls that preclude economizer operation whenever mechanical cooling is required simultaneously.

(b) Systems in climates with less than 750 average operating hours per year between 8 a.m. and 4 p.m. when the ambient dry-bulb temperatures are between 55 °F and 69 °F inclusive.

403.2.8.3 System design and economizer controls shall be such that economizer operation does not increase the building heating energy use during normal operation.

403.2.9 *Distribution System Construction and Insulation.*

403.2.9.1 *Piping Insulation.* All HVAC system piping shall be thermally insulated in accordance with Table 403.2.9.1. Exceptions are as follows:

(a) Factory-installed piping within HVAC equipment tested and rated in accordance with subsection 403.1.

(b) Piping that conveys fluids that have a design operating temperature range between 55 °F and 105 °F.

(c) Piping that conveys fluids that have not been heated or cooled through the use of fossil fuels or electricity.

TABLE 403.2.9.1—MINIMUM PIPE INSULATION (IN.) [A]

	Insulation conductivity [a]		Nominal pipe diameter (in.)				
Fluid Design Operating Temp. Range (F)	Conductivity Range Btu in./(h ft² F)	Mean Temp. F	<1.0	1.0 to 1.25	1.5 to 3.0	4.0 to 6.0	8.0
Heating systems (Steam, Steam Condensate, and Hot Water) [b c]							
>350	0.32–0.34	250	1.0	1.5	1.5	2.0	2.5
251–350	0.29–0.32	200	1.0	1.0	1.5	2.0	2.0
201–250	0.27–0.30	150	1.0	1.0	1.0	1.5	1.5
141–200	0.25–0.29	125	1.0	1.0	1.0	1.5	1.5

TABLE 403.2.9.1—MINIMUM PIPE INSULATION (IN.) [A]—Continued

Fluid Design Operating Temp. Range (F)	Insulation conductivity [a]		Nominal pipe diameter (in.)				
	Conductivity Range Btu in./(h ft² F)	Mean Temp. F	<1.0	1.0 to 1.25	1.5 to 3.0	4.0 to 6.0	8.0
105–140	0.22–0.28	100	0.5	0.5	0.75	1.0	1.0
Domestic and Service Hot Water Systems							
105 and Greater	0.22–0.28	100	0.5	0.5	0.75	1.0	1.0
Cooling Systems (Chilled Water, Brine, and Refrigerant) [d]							
40–55	0.22–0.28	100	0.5	0.5	0.5	0.5	0.5
Below 40	0.22–0.28	100	0.5	0.5	0.5	0.5	0.5

[a] For insulation outside the stated conductivity range, the minimum thickness (T) shall be determined as follows: $T=r\{1+t/r)^{K/k}-1\}$

Where T = minimum insulation thickness (in), r = actual outside radius of pipe (in), t = insulation thickness listed in this table for applicable fluid temperature and pipe size, K = conductivity of alternate material at mean rating temperature indicated for the applicable fluid temperature (Btu in/h ft² F); and k = the upper value of the conductivity range listed in this table for the applicable fluid temperature.

[b] These thicknesses are based on energy efficiency considerations only. Safety issues, such as insulation surface temperatures, have not been considered.

[c] Piping insulation is not required between the control valve and coil on run-outs when the control valve is located within four feet of the coil and the pipe diameter is 1 inch or less.

[d] Note that the required minimum thickness does not take water vapor transmission and possible surface condensation into account.

TABLE 403.2.9.2—MINIMUM DUCT INSULATION R-VALUE [A]

Duct location	Cooling supply ducts				Heating supply ducts				Return ducts
	CDD65 ≤500	500 <CDD65 ≤1,000	1,000 <CDD65 ≤2,000	CDD65 ≥2,000	HDD65 ≤1,500	1,500 <HDD65 ≤4,500	4,500 <HDD65 ≤7,500	HDD65 ≥7,500	
Exterior of Building	R–3.3	R–5.0	R–6.5	R–8.0	R–3.3	R–5.0	R–6.5	R–8.0	R–5.0
Ventilated Attic	R–3.3	R–3.3	R–3.3	R–5.0	R–5.0	R–5.0	R–5.0	R–5.0	R–3.3
Unvented Attic	R–5.0	R–5.0	R–5.0	R–5.0	R–5.0	R–5.0	R–5.0	R–5.0	R–3.3
Other Conditioned Spaces [b].	R–3.3	R–3.3	R–3.3	R–3.3	R–3.3	R–3.3	R–3.3	R–3.3	R–3.3
Indirectly Conditioned Spaces [c].	none	R–3.3	R–3.3	R–3.3	R–3.3	R–3.3	R–3.3	R–3.3	none
Buried	none	none	none	none	R–5.0	R–5.0	R–5.0	R–5.0	R–3.3

[a] Insulation R-values, measured in (h.ft².°F)/Btu, are for the insulation as installed and do not include film resistance. The required minimum thickness do not consider water vapor transmission and possible surface condensation. The required minimum thicknesses do not consider water vapor transmission and condensation. For ducts that are designed to convey both heated and cooled air, duct insulation shall be as required by the most restrictive condition. Where exterior walls are used as plenum walls, wall insulation shall be as required by the most restrictive condition of this section or subsection 402. Insulation resistance measured on a horizontal plane in accordance with RS–6 (incorporated by reference, see § 434.701) at a mean temperature of 75 °F. RS–6 is in incorporated by reference at § 434.701.

[b] Includes crawl spaces, both ventilated and non-ventilated.

[c] Includes return air plenums, with and without exposed roofs above.

403.2.9.2 *Duct and Plenum Insulation.* All supply and return air ducts and plenums installed as part of an HVAC air distribution system shall be thermally insulated in accordance with Table 403.2.9.1. Exceptions are as follows:

(a) Factory-installed plenums, casings, or ductwork furnished as a part of the HVAC equipment tested and rated in accordance with subsection 403.1

(b) Ducts within the conditioned space that they serve. (incorporated by reference, see § 434.701)ca a06oc0.186

403.2.9.3 *Duct and Plenum Construction.* All air-handling ductwork and plenums shall be constructed and erected in accordance with RS–34, RS–35, and RS–36 (incorporated by reference, see § 434.701). Where supply ductwork and plenums designed to operate at static pressures from 0.25 in. wc to 2 in. wc, inclusive, are located outside of the conditioned space or in return plenums, joints shall be sealed in accordance with Seal Class C as defined in RS–34 (incorporated by reference, see § 434.701). Pressure sensitive tape shall not be used as the primary

sealant where such ducts are designed to operate at static pressures of 1 in. wc, or greater.

403.2.9.3.1 Ductwork designed to operate at static pressures in excess of 3 in. wc shall be leak-tested in accordance with Section 5 of RS–35, (incorporated by reference, see § 434.701), or equivalent. Test reports shall be provided in accordance with Section 6 of RS–35, (incorporated by reference, see § 434.701)m or equivalent. The tested duct leakage class at a test pressure equal to the design duct pressure class rating shall be equal to or less than leakage Class 6 as defined in Section 4.1 of RS–35 (incorporated by reference, see § 434.701). Representative sections totaling at least 25% of the total installed duct area for the designated pressure class shall be tested.

403.2.10 *Completion.*

403.2.10.1 *Manuals.* Construction documents shall require an operating and maintenance manual provided to the Federal Agency. The manual shall include, at a minimum, the following:

(a) Submittal data stating equipment size and selected options for each piece of equipment requiring maintenance, including assumptions used in outdoor design calculations.

(b) Operating and maintenance manuals for each piece of equipment requiring maintenance. Required maintenance activity shall be specified.

(c) Names and addresses of at least one qualified service agency to perform the required periodic maintenance shall be provided.

(d) HVAC controls systems maintenance and calibration information, including wiring diagrams, schematics, and control sequence descriptions. Desired or field determined setpoints shall be permanently recorded on control drawings, at control devices, or, for digital control systems, in programming comments.

(e) A complete narrative, prepared by the designer, of how each system is intended to operate shall be included with the construction documents.

403.2.10.2 *Drawings.* Construction documents shall require that within 30 days after the date of system acceptance, record drawings of the actual installation be provided to the Federal agency. The drawings shall include details of the air barrier installation in every envelope component, demonstrating continuity of the air barrier at all joints and penetrations.

403.2.10.3 *Air System Balancing.* Construction documents shall require that all HVAC systems be balanced in accordance with the industry accepted procedures (such as National Environmental Balancing Bureau (NEBB) Procedural Standards, Associated Air Balance Council (AABC) National Standards, or ANSI/ASHRAE Standard 111). Air and water flow rates shall be measured and adjusted to deliver final flow rates within 10% of design rates, except variable flow distribution systems need not be balanced upstream of the controlling device (VAV box or control valve).

403.2.10.3.1 Construction documents shall require a written balance report be provided to the Federal agency for HVAC systems serving zones with a total conditioned area exceeding 5,000 ft^2.

403.2.10.3.2 Air systems shall be balanced in a manner to first minimize throttling losses, then fan speed shall be adjusted to meet design flow conditions or equivalent procedures. Exceptions are as follows: Damper throttling may be used for air system balancing;

(a) With fan motors of 1 hp (0.746 kW) or less, or

(b) Of throttling results in no greater than ⅓ hp (0.248 kW) fan horsepower draw above that required if the fan speed were adjusted.

403.2.10.4 *Hydronic System Balancing.* Hydronic systems shall be balanced in a manner to first minimize throttling losses; then the pump impeller shall be trimmed or pump speed shall be adjusted to meet design flow conditions. Exceptions are as follows:

(a) Pumps with pump motors of 10 hp (7.46 kW) or less.

(b) If throttling results in no greater than 3 hp (2.23 kW) pump horsepower draw above that required if the impeller were trimmed.

(c) To reserve additional pump pressure capability in open circuit piping systems subject to fouling. Valve throttling pressure drop shall not exceed that expected for future fouling.

403.2.10.5 *Control System Testing.* HVAC control systems shall be tested

to assure that control elements are calibrated, adjusted, and in proper working condition. For projects larger than 50,000 ft2 conditioned area, detailed instructions for commissioning HVAC systems shall be provided by the designer in plans and specifications.

§ 434.404 Building service systems and equipment.

404.1 *Service Water Heating Equipment Efficiency*. Equipment must satisfy the minimum performance efficiency specified in Table 404.1 when tested in accordance with RS–37, RS–38, or RS–39 (incorporated by reference, see § 434.701). Omission of equipment from Table 404.1 shall not preclude the use of such equipment. Service water heating equipment used to provide additional function of space heating as part of a combination (integrated) system shall satisfy all stated requirements for the service water heating equipment. All gas-fired storage water heaters that are not equipped with a flue damper and use indoor air for combustion or draft hood dilution and that are installed in a conditioned space, shall be equipped with a vent damper listed in accordance with RS–42 (incorporated by reference, see § 434.701). Unless the water heater has an available electrical supply, the installation of such a vent damper shall not require an electrical connection.

TABLE 404.1—MINIMUM PERFORMANCE OF WATER HEATING EQUIPMENT

Category	Type	Fuel	Input rating	V_T	Input to V_T ratio Btuh/gal	Test Method[a]	Energy factor	Thermal efficiency E_t%	Standby loss %/HR
NAECA	all	electric	12 kW	all[c]		DOE Test	0.93–0.00132V		
Covered	storage	gas	75,000 Btuh	all[c]		Procedure 10	0.62–0.0019V		
Water	instantaneous	gas	200,000	all		CFR part 430	0.62–0.0019V		
Heating	storage	oil	Btuh[c]	all		430	0.59–0.0019V		
Equipment[b]	instantaneous	oil	105,000 Btuh	all		Appendix E	0.59–0.0019V		
	pool heater ...	gas/oil	210,000 Btuh all	all		ANSI Z21.56 (RS–38)*		78	
Other Water Heating	storage	electric	all	all		ANSI Z21.10.3		78	.030+27/V_T
Equipment[d]	storage/ ..... instantaneous	gas/oil	155m999 Btuh	all	<4,000	(RS–39)*		78	1.3+114//V_T
				all	<4,000			80	1.3+95/V_T
			>155,000 Btuh	<10	4,000			77	
				10	4,000				2.3+67/V_T
Unfired ..... Storage ..... Tanks					all				6.5 Btuh/ft2

[a] For detailed references see subpart E.
[b] Consistent with National Appliance Energy Conservation Act (NAECA) of 1987.
[c] DOE Test Procedures apply to electric and gas storage water heaters with rated volumes 20 gallons and gas instantaneous water heaters with input ratings of 50,000 to 200,000 Btuh.
[d] All except those water heaters covered by NAECA.
* Incorporated by reference, see § 434.701.

404.1.1 *Testing Electric and Oil Storage Water Heaters for Standby Loss*.

(a) When testing an electric storage water heater, the procedures of Z21.10.3–1990 (RS–39, incorporated by reference, see § 434.701), Section 2.9, shall be used. The electrical supply voltage shall be maintained with ±1% of the center of the voltage range specified on the water heater nameplate. Also, when needed for calculations, the thermal efficiency (E_t) shall be 98%. When testing an oil-fired water heater, the procedures of Z21.10.3–1990 (RS–39 incorporated by reference, see § 434.701), Sections 2.8 and 2.9, shall be used.

(b) The following modifications shall be made: A vertical length of flue pipe shall be connected to the flue gas outlet of sufficient height to establish the minimum draft specified in the manufacturer's installation instructions. All measurements of oil consumption shall be taken by instruments with an accuracy of ±1% or better. The burner rate shall be adjusted to achieve an hourly Btu input rate within ±2% of the manufacturer's specified input rate with the CO_2 reading as specified by the manufacturer with smoke no greater than 1 and the fuel pump pressure within ±1% of the manufacturer's specification.

404.1.2 *Unfired Storage Tanks*. The heat loss of the tank surface area Btu/(h·ft^2) shall be based on an 80 °F water-air temperature difference.

404.1.3 *Storage Volume Symbols in Table 404.1*. The symbol ''V'' is the rated storage volume in gallons as specified by the manufacturer. The symbol ''V_T'' is the storage volume in gallons as measured during the test to determine the standby loss. V_T may differ from V, but it is within tolerances allowed by the applicable Z21 and Underwriters Laboratories standards. Accordingly, for the purpose of estimating the standby loss requirement using the rated volume shown on the rating plate, V_T should be considered as no less than 0.95V for gas and oil water heaters and no less than 0.90V for electric water heaters.

404.1.4 *Electric Water Heaters*. In applications where water temperatures not greater than 145 °F are required, an economic evaluation shall be made on the potential benefit of using an electric heat pump water heater(s) instead of an electric resistance water heater(s). The analysis shall compare the extra installed costs of the heat pump unit with the benefits in reduced energy costs (less increased maintenance costs) over the estimated service life of the heat pump water heater. Exceptions are as follows: Electric water heaters used in conjunction with site-recovered or site-solar energy sources that provide 50% or more of the water heating load or off-peak heating with thermal storage.

404.2 *Service Hot Water Piping Insulation*. Circulating system piping and noncirculating systems without heat traps, the first eight feet of outlet piping from a constant-temperature noncirculating storage system, and the inlet pipe between the storage tank and a heat trap in a noncirculating storage system shall meet the provisions of subsection 403.2.9.

404.2.1 Vertical risers serving storage water heaters not having an integral heat trap and serving a noncirculating system shall have heat traps on both the inlet and outlet piping as close as practical to the water heater.

404.3 *Service Water Heating System Controls*. Temperature controls that allow for storage temperature adjustment from 110 °F to a temperature compatible with the intended use shall be provided in systems serving residential dwelling units and from 90 °F for other systems. When designed to maintain usage temperatures in hot water pipes, such as circulating hot water systems or heat trace, the system shall be equipped with automatic time switches or other controls that can be set to turn off the system.

404.3.1 The outlet temperature of lavatory faucets in public facility restrooms shall be limited to 110 °F.

404.4 *Water Conservation*. Showerheads and lavatory faucets must meet the requirements of 10 CFR 430.32 (o)-(p).

404.4.1 Lavatory faucets in public facility restrooms shall be equipped with a foot switch, occupancy sensor, or similar device or, in other than lavatories for physically handicapped persons, limit water delivery to 0.25 gal/cycle.

404.5 *Swimming Pools*. All pool heaters shall be equipped with a readily accessible on-off switch.

404.5.1 Time switches shall be installed on electric heaters and pumps. Exceptions are as follows:

(a) Pumps required to operate solar or heat recovery pool heating systems.

(b) Where public health requirements require 24-hour pump operation.

404.5.2 Heated swimming pools shall be equipped with pool covers. Exception: When over 70% of the annual energy for heating is obtained from a site-recovered or site-solar energy source.

404.6 *Combined Service Water Heating and Space Heating Equipment*. A single piece of equipment shall not be used to

provide both space heating and service water heating. Exceptions are as follows:

(a) The energy input or storage volume of the combined boiler or water heater is less than twice the energy input or storage volume of the smaller of the separate boilers or water heaters otherwise required or

(b) The input to the combined boiler is less than 150,000 Btuh.

Subpart E—Building Energy Cost Compliance Alternative

§ 434.501 General.

501.1 Subpart E permits the use of the Building Energy Cost Compliance Alternative as an alternative to many elements of subpart D. When this subpart is used, it must be used with subpart C and subpart D, 401.1, 401.2, 401.3.4 and in conjunction with the minimum requirements found in subsections 402.1, 402.2, and 402.3., 403.1, 403.2.1–7, 403.2.9 and 404.

501.2 *Compliance*. Compliance under this method requires detailed energy analyses of the entire Proposed Design, referred to as the Design Energy Consumption; an estimate of annual energy cost for the proposed design, referred to as the Design Energy Cost; and comparison against an Energy Cost Budget. Compliance is achieved when the estimated Design Energy Cost is less than or equal to the Energy Cost Budget. This subpart provides instructions for determining the Energy Cost Budget and for calculating the Design Energy Consumption and Design Energy Cost. The Energy Cost Budget shall be determined through the calculation of monthly energy consumption and energy cost of a Prototype or Reference Building design configured to meet the requirements of subsections 401 through 404.

501.3 Designers are encouraged to employ the Building Energy Cost Budget compliance method set forth in this section for evaluating proposed design alternatives to using the elements prescribed in subpart D. The Building Energy Cost Budget establishes the relative effectiveness of each design alternative in energy cost savings, providing an energy cost basis upon which the building owner and designer may select one design over another. This Energy Cost Budget is the highest allowable calculated energy cost for a specific building design. Other alternative designs are likely to have lower annual energy costs and life cycle costs than those used to minimally meet the Energy Cost Budget.

501.4 The Energy Cost Budget is a numerical reference for annual energy cost. It's purpose is to assure neutrality with respect to choices such as HVAC system type, architectural design and fuel choice by providing a fixed, repeatable budget that is independent of any of these choices wherever possible (*i.e.*, for the prototype buildings). The Energy Cost Budget for a given building size and type will vary only with climate, the number of stories, and the choice of simulation tool. The specifications of the prototypes are necessary to assure repeatability, but have no other significance. They are not necessarily recommended energy conserving practice, or even physically reasonable practice for some climates or buildings, but represent a reasonable worst case of energy cost resulting from compliance with the provisions of subsections 401 through 404.

§ 434.502 Determination of the annual energy cost budget.

502.1 The annual Energy Cost Budgets shall be determined in accordance with the Prototype Building Procedure in § 434.503 and § 434.504 or the Reference Building Procedure in § 434.505. Both methods calculate an annual Energy Cost by summing the 12 monthly Energy Cost Budgets. Each monthly Energy Cost Budget is the product of the monthly Building Energy Consumption of each type of energy used multiplied by the monthly Energy Cost per unit of energy for each type of energy used.

502.2 The Energy Cost Budget shall be determined in accordance with Equation 502.2.a as follows:

$$ECB = ECB_{jan} + \ldots ECB_m + \ldots + ECB_{dec} \qquad \text{(Equation 502.2. a)}$$

Based on:

$$ECB_m = BECON_{m1} 1 \times ECOS_{m1} + \ldots + BECON_{mi} \times ECOS_{mi} \qquad \text{(Equation 502.2. b)}$$

Where:

ECB = The annual Energy Cost Budget

ECB_m = The monthly Energy Cost Budget

$BECON_{mi}$ = The monthly Budget Energy Consumption of the i_{th} type of energy

$ECOS_{mi}$ = The monthly Energy Cost, per unit of the i_{th} type of energy

502.3 The monthly Energy Cost Budget shall be determined using current rate schedules or contract prices available at the building site for all types of energy purchased. These costs shall include demand charges, rate blocks, time of use rates, interruptible service rates, delivery charges, taxes, and all other applicable rates for the type, location, operation, and size of the proposed design. The monthly Budget Energy Consumption shall be calculated from the first day through the last day of each month, inclusive.

§ 434.503 Prototype building procedure.

503.1 The Prototype Building procedure shall be used for all building types listed below. For mixed-use buildings the Energy Cost Budget is derived by allocating the floor space of each building type within the floor space of the prototype building. For buildings not listed below, the Reference Building procedure of § 434.505 shall be used. Prototype buildings include:

(a) Assembly;
(b) Office (Business);
(c) Retail (Mercantile);
(d) Warehouse (Storage);
(e) School (Educational);
(f) Hotel/Motel;
(g) Restaurant;
(h) Health/Institutional; and
(i) Multi-Family.

§ 434.504 Use of the prototype building to determine the energy cost budget.

504.1 Determine the building type of the Proposed Design using the categories in subsection 503.1. Using the appropriate Prototype Building characteristics from all of the tables contained in subpart E, the building shall be simulated using the same gross floor area and number of floors for the Prototype Building as in the Proposed Design.

504.2 The form, orientation, occupancy and use profiles for the Prototype Building shall be fixed as described in subsection 511. Envelope, lighting, other internal loads and HVAC systems and equipment shall meet the requirements of subsection 301, 401, 402, 403, and 404 and are standardized inputs.

§ 434.505 Reference building method.

505.1 The Reference Building procedure shall be used only when the Proposed Design cannot be represented by one or a combination of the Prototype Building listed in subsection 503.1 or the assumptions for the Prototype Building in Subsection 510, such as occupancy and use-profiles, do not reasonably represent the Proposed Design.

§ 434.506 Use of the reference building to determine the energy cost budget.

506.1 Each floor shall be oriented in the same manner for the Reference Building as in the Proposed Design. The form, gross and conditioned floor areas of each floor and the number of floors shall be the same as in the Proposed Design. All other characteristics, such as lighting, envelope and HVAC systems and equipment, shall meet the requirements of subsections 301, 401, 402, 403 and 404.

§ 434.507 Calculation procedure and simulation tool.

507.1 The Prototype or Reference Buildings shall be modeled using the

criteria of subsections 510 and 521. The modeling shall use a climate data set appropriate for both the site and the complexity of the energy conserving features of the design. ASHRAE Weather Year for Energy Calculations (WYEC) data or bin weather data shall be used in the absence of other appropriate data.

§ 434.508 Determination of the design energy consumption and design energy cost.

508.1 The Design Energy Consumption shall be calculated by modeling the Proposed Design using the same methods, assumptions, climate data, and simulation tool as were used to establish the Energy Cost Budget, except as explicitly stated in 509 through 534. The Design Energy Cost shall be calculated per Equation 508.1.

$$DECOS = DECOS_{jan} + \ldots DECOS_{m} \ldots + DECOS_{dec} \qquad \text{Equation 508.1}$$

Based on:

$DECOS_m = DECON_{ml} \times ECOS_{ml} + \ldots + DECON_{mi} \times ECOS_{mi}$ (Equation 508.1.2)

Where:

DECOS = The annual Design Energy Cost

$DECOS_m$ = The monthly Design Energy Cost

$DECON_{mi}$ = The monthly Design Energy Consumption of the i_{th} type of energy

$ECOS_{mi}$ = The monthly Energy Cost per unit of the i_{th} type of energy

The $DECON_{mi}$ shall be calculated from the first day through the last day of the month, inclusive.

§ 434.509 Compliance.

509.1 If the Design Energy Cost is less than or equal to the Energy Cost Budget, and all of the minimum requirements of subsection 501.2 are met, the Proposed Design complies with the standards.

§ 434.510 Standard calculation procedure.

510.1 The Standard Calculation Procedure consists of methods and assumptions for calculating the Energy Cost Budget for the Prototype or Reference Building and the Design Energy Consumption and Design Energy Cost of the Proposed Design. In order to maintain consistency between the Energy Cost Budget and the Design Energy Cost, the input assumptions to be used are stated below. These inputs shall be used to determine the Energy Cost Budget and the Design Energy Consumption.

510.2 Prescribed assumptions shall be used without variation. Default assumptions shall be used unless the designer can demonstrate that a different assumption better characterizes the building's energy use over its expected life. The default assumptions shall be used in modeling both the Prototype or Reference Building and the Proposed Design, unless the designer demonstrates clear cause to modify these assumptions. Special procedures for speculative buildings are discussed in subsection 503. Shell buildings may not use subpart E.

§ 434.511 Orientation and shape.

511.1 The Prototype Building shall consist of the same number of stories, and gross and conditioned floor area as the Proposed Design, with equal area per story. The building shape shall be rectangular, with a 2.5:1 aspect ratio. The long dimensions of the building shall face East and West. The fenestration shall be uniformly distributed in proportion to exterior wall area. Floor-to-floor height for the Prototype Building shall be 13 ft. except for dwelling units in hotels/motels and multi-family high-rise residential buildings where floor-to-floor height shall be 9.5 ft.

511.2 The Reference Building shall consist of the same number of stories, and gross floor area for each story as the Proposed Design. Each floor shall be oriented in the same manner as the Proposed Design. The geometric form shall be the same as the Proposed Design.

§ 434.512 Internal loads.

512.1 The systems and types of energy specified in this section are provided only for purposes of calculating the Energy Cost Budget. They are not requirements for either systems or the type of energy to be used in the Proposed Design or for calculation of Design Energy Cost.

512.2 Internal loads for multi-family high-rise residential buildings are prescribed in Tables 512.2.a and b, Multi-Family High Rise Residential Building Schedules. Internal loads for other building types shall be modeled as noted in this subsection.

TABLE 512.2.A—MULTI-FAMILY HIGH RISE RESIDENTIAL BUILDINGS SCHEDULES—ONE-ZONE DWELLING UNIT

[Internal loads per dwelling unit Btu/h]

Hour	Occupants		Lights	Equipment	
	Sensible	Latent	Sensible	Sensible	Latent
1	300	260	0	750	110
2	300	260	0	750	110
3	300	260	0	750	110
4	300	260	0	750	110
5	300	260	0	750	110
6	300	260	0	750	110
7	300	260	0	750	110
8	210	260	980	1250	190
9	100	80	840	2600	420
10	100	80	0	1170	180
11	100	80	0	1270	190
12	100	80	0	2210	330
13	100	80	0	2210	330
14	100	80	0	1270	190
15	100	80	0	1270	190
16	100	80	0	1270	190
17	100	80	0	1270	190
18	300	260	0	3040	450
19	300	260	0	3360	500
20	300	260	960	1490	220
21	300	260	960	1490	220
22	300	260	960	1490	220
23	300	260	960	1060	160
24	300	260	960	1060	160

TABLE 512.2.B—MULTI-FAMILY HIGH RISE RESIDENTIAL BUILDING SCHEDULES-TWO-ZONE DWELLING UNIT

[Internal loads per dwelling unit Btu/h]

Hour	Bedrooms & bathrooms					Other rooms				
	Occupants		Lights	Equipment		Occupants		Lights	Equipment	
	Sensible	Latent	Sensible	Sensible	Latent	Sensible	Latent	Sensible	Sensible	Latent
1	300	260	0	750	110					
2	300	260	0	750	110					
3	300	260	0	750	110					
4	300	260	0	750	110					
5	300	260	0	750	110					
6	300	260	0	750	110					
7	300	260	0	750	110					
8	210	260	980	1250	190					
9	100	80	840	2600	420					
10	100	80	0	1170	180					
11	100	80	0	1270	190					
12	100	80	0	2210	330					
13	100	80	0	2210	330					
14	100	80	0	1270	190					
15	100	80	0	1270	190					
16	100	80	0	1270	190					
17	100	80	0	1270	190					
18	300	260	0	3040	450					
19	300	260	0	3360	500					
20	300	260	960	1490	220					

TABLE 512.2.B—MULTI-FAMILY HIGH RISE RESIDENTIAL BUILDING SCHEDULES-TWO-ZONE DWELLING UNIT—Continued

[Internal loads per dwelling unit Btu/h]

Hour	Bedrooms & bathrooms					Other rooms				
	Occupants		Lights	Equipment		Occupants		Lights	Equipment	
	Sensible	Latent	Sensible	Sensible	Latent	Sensible	Latent	Sensible	Sensible	Latent
21	300	260	960	1490	220					
22	300	260	960	1490	220					
23	300	260	960	1060	160					
24	300	260	960	1060	160					

TABLE 512.2.B—MULTI-FAMILY HIGH RISE RESIDENTIAL BUILDING SCHEDULES-TWO-ZONE DWELLING UNIT

[Internal loads per dwelling unit Btu/h]

Hour	Bedrooms & bathrooms					Other rooms				
	Occupants		Lights	Equipment		Occupants		Lights	Equipment	
	Sensible	Latent	Sensible	Sensible	Latent	Sensible	Latent	Sensible	Sensible	Latent
1	300	260	0	100	20	0	0	0	650	90
2	300	260	0	100	20	0	0	0	650	90
3	300	260	0	100	20	0	0	0	650	90
4	300	260	0	100	20	0	0	0	650	90
5	300	260	0	100	20	0	0	0	650	90
6	300	260	0	100	20	0	0	0	650	90
7	200	180	680	200	40	100	80	300	1050	150
8	110	120	240	200	40	100	80	600	2400	380
9	0	0	0	100	20	100	80	0	1070	160
0	0	0	0	100	20	100	80	0	1170	170
0	0	0	0	100	20	100	80	0	1170	170
0	0	0	0	100	20	100	80	0	2110	310
0	0	0	0	100	20	100	80	0	2110	310
14	0	0	0	100	20	100	80	0	1170	170
15	0	0	0	100	20	100	80	0	1170	170
16	0	0	0	100	20	100	80	0	1170	170
17	0	0	0	100	20	100	80	0	1170	170
18	0	0	0	100	20	300	260	0	2940	430
19	0	0	0	100	20	300	260	0	3260	480
20	100	80	320	300	60	200	180	640	1190	160
21	100	80	320	300	60	200	180	640	1190	160
22	150	130	480	700	90	150	130	480	790	130
23	300	260	640	410	70	0	0	320	650	90
24	300	260	640	410	70	0	0	320	650	90

§ 434.513 Occupancy.

5131 Occupancy schedules are default assumptions. The same assumptions shall be made in computing Design Energy Consumption as were used in calculating the Energy Cost Budget.

513.2 Table 513.2.a, Occupancy Density, establishes the density, in ft^2 person of conditioned floor area, to be used for each building type. Table 513.2.b, Building Schedule Percentage Multipliers, establishes the percentage of total occupants in the building by hour of the day for each building type.

TABLE 513.2.A—OCCUPANCY DENSITY

Building type	Conditioned floor area Ft^2 person
Assembly	50
Office	275
Retail	300
Warehouse	15000
School	75
Hotel/Motel	250
Restaurant	100
Health/Institutional	200
Multi-family High-rise Residential	2 per unit . [1]

[1] Heat generation: Btu/h per person: 230 Btu/h per person sensible, and 190 Btu/h per person latent. See Tables 512.2 a and b.

TABLE 513.2.b
BUILDING SCHEDULE PERCENTAGE MULTIPLIERS

		1	2	3	4	5	6	7	8	9	10	11	12	13	14	15	16	17	18	19	20	21	22	23	24
1. ASSEMBLY																									
	WEEKDAY:	0	0	0	0	0	0	0	0	20	20	20	20	80	80	80	80	80	80	20	20	20	20	0	0
OCCUPANCY	SATURDAY:	0	0	0	0	0	0	0	0	20	20	20	20	60	60	60	60	60	60	60	60	60	60	0	0
	SUNDAY:	0	0	0	0	0	0	0	0	10	10	10	10	10	70	70	70	70	70	70	70	70	70	0	0
ASSEMBLY	WEEKDAY:	0	0	0	0	0	0	40	40	40	75	75	75	75	75	75	75	75	75	75	75	75	75	0	0
LTNG & RECEP	SATURDAY:	0	0	0	0	0	0	0	30	30	50	50	50	50	50	50	50	50	50	50	50	50	50	0	0
	SUNDAY:	0	0	0	0	0	0	0	30	30	30	30	30	65	65	65	65	65	65	65	65	65	65	0	0
ASSEMBLY	WEEKDAY:	Off	Off	Off	Off	Off	On	On	On	On	On	On	On	On	On	On	On	On	On	On	On	On	On	On	Off
HVAC	SATURDAY:	Off	Off	Off	Off	Off	Off	On	On	On	On	On	On	On	On	On	On	On	On	On	On	On	On	On	Off
	SUNDAY:	Off	Off	Off	Off	Off	Off	On	On	On	On	On	On	On	On	On	On	On	On	On	On	On	On	On	Off
ASSEMBLY	WEEKDAY:	0	0	0	0	0	0	0	0	0	5	5	35	5	5	5	5	5	0	0	0	0	0	0	0
SWH	SATURDAY:	0	0	0	0	0	0	0	0	0	5	5	20	0	0	0	0	0	0	0	65	30	0	0	0
	SUNDAY:	0	0	0	0	0	0	0	0	0	5	5	10	0	0	0	0	0	0	0	65	30	0	0	0
2. OFFICE																									
	WEEKDAY:	0	0	0	0	0	0	0	10	20	95	95	45	45	95	95	95	95	95	30	10	10	10	0	0
OCCUPANCY	SATURDAY:	0	0	0	0	0	0	0	10	10	30	30	30	30	10	10	10	10	10	0	0	0	0	0	0
	SUNDAY:	0	0	0	0	0	0	0	0	0	0	0	0	0	0	0	0	0	0	0	0	0	0	0	0
OFFICE	WEEKDAY:	0	0	0	0	0	0	10	30	90	90	90	80	90	90	90	90	90	90	30	30	20	20	0	0
LTNG & RECEP	SATURDAY:	0	0	0	0	0	0	10	30	30	30	30	15	15	15	15	15	15	15	0	0	0	0	0	0
	SUNDAY:	0	0	0	0	0	0	0	0	0	0	0	0	0	0	0	0	0	0	0	0	0	0	0	0
OFFICE	WEEKDAY:	Off	Off	Off	Off	Off	Off	On	On	On	On	On	On	On	On	On	On	On	On	Off	Off	Off	Off	Off	Off
HVAC	SATURDAY:	Off	Off	Off	Off	Off	Off	On	On	On	On	On	On	On	Off	Off	Off	Off	Off	Off	Off	Off	Off	Off	Off
	SUNDAY:	Off	Off	Off	Off	Off	Off	Off	Off	Off	Off	Off	Off	Off	Off	Off	Off	Off	Off	Off	Off	Off	Off	Off	Off
OFFICE	WEEKDAY:	0	0	0	0	0	0	0	15	30	35	35	45	55	50	30	30	40	20	20	10	15	5	0	0
SWH	SATURDAY:	0	0	0	0	0	0	0	10	10	20	15	20	15	15	10	10	10	0	0	0	0	0	0	0
	SUNDAY:	0	0	0	0	0	0	0	0	0	0	0	0	0	0	0	0	0	0	0	0	0	0	0	0

Table 513.2.b
BUILDING SCHEDULE PERCENTAGE MULTIPLIERS (cont.)

3. RETAIL		1	2	3	4	5	6	7	8	9	10	11	12	13	14	15	16	17	18	19	20	21	22	23	24
	WEEKDAY:	0	0	0	0	0	0	0	0	20	20	20	20	80	80	80	80	80	80	20	20	20	20	0	0
OCCUPANCY	SATURDAY:	0	0	0	0	0	0	0	0	20	20	20	20	60	60	60	60	60	60	60	60	60	60	0	0
	SUNDAY:	0	0	0	0	0	0	0	0	10	10	10	10	10	70	70	70	70	70	70	70	70	70	0	0
RETAIL	WEEKDAY:	0	0	0	0	0	0	40	40	40	75	75	75	75	75	75	75	75	75	75	75	75	75	0	0
LTNG & RECEP	SATURDAY:	0	0	0	0	0	0	0	30	30	50	50	50	50	50	50	50	50	50	50	50	50	50	0	0
	SUNDAY:	0	0	0	0	0	0	0	30	30	30	30	30	65	65	65	65	65	65	65	65	65	65	0	0
RETAIL	WEEKDAY:	Off	Off	Off	Off	Off	Off	On	On	On	On	On	On	On	On	On	On	On	On	On	On	On	Off	Off	Off
HVAC	SATURDAY:	Off	Off	Off	Off	Off	Off	On	On	On	On	On	On	On	On	On	On	On	On	On	On	On	On	Off	Off
	SUNDAY:	Off	Off	Off	Off	Off	Off	Off	Off	On	On	On	On	On	On	On	On	On	On	On	Off	Off	Off	Off	Off
RETAIL	WEEKDAY:	0	0	0	0	0	0	0	10	20	30	40	55	60	60	45	40	45	45	40	30	30	0	0	0
SWH	SATURDAY:	0	0	0	0	0	0	0	15	20	25	40	50	55	55	45	45	45	45	40	35	25	20	0	0
	SUNDAY:	0	0	0	0	0	0	0	0	0	10	25	30	35	35	30	30	35	30	20	0	0	0	0	0
	WEEKDAY:	0	0	0	0	0	0	0	15	70	90	90	90	50	85	85	85	20	0	0	0	0	0	0	0
4. WAREHOUSE																									
OCCUPANCY	SATURDAY:	0	0	0	0	0	0	0	0	20	20	20	20	10	10	10	10	0	0	0	0	0	0	0	0
	SUNDAY:	0	0	0	0	0	0	0	0	0	0	0	0	0	0	0	0	0	0	0	0	0	0	0	0
WAREHOUSE	WEEKDAY:	0	0	0	0	0	0	0	40	70	90	90	90	90	90	90	90	90	0	0	0	0	0	0	0
LTNG & RECEP	SATURDAY:	0	0	0	0	0	0	0	0	10	25	25	25	10	10	10	10	0	0	0	0	0	0	0	0
	SUNDAY:	0	0	0	0	0	0	0	0	0	0	0	0	0	0	0	0	0	0	0	0	0	0	0	0
WAREHOUSE	WEEKDAY:	Off	Off	Off	Off	Off	Off	Off	On	On	On	On	On	On	On	On	On	On	Off	Off	Off	Off	Off	Off	Off
HVAC	SATURDAY:	Off	Off	Off	Off	Off	Off	Off	Off	On	On	On	On	On	On	On	On	Off	Off	Off	Off	Off	Off	Off	Off
	SUNDAY:	Off	Off	Off	Off	Off	Off	Off	Off	Off	Off	Off	Off	Off	Off	Off	Off	Off	Off	Off	Off	Off	Off	Off	Off
WAREHOUSE	WEEKDAY:	0	0	0	0	0	0	0	5	25	35	35	45	55	50	35	50	15	0	0	0	0	0	0	0
SWH	SATURDAY:	0	0	0	0	0	0	0	0	0	10	10	15	0	0	0	0	0	0	0	0	0	0	0	0
	SUNDAY:	0	0	0	0	0	0	0	0	0	0	0	0	0	0	0	0	0	0	0	0	0	0	0	0

REVISED VERSION
September 14, 2000

Table 513.2.b
BUILDING SCHEDULE PERCENTAGE MULTIPLIERS (cont.)

		1	2	3	4	5	6	7	8	9	10	11	12	13	14	15	16	17	18	19	20	21	22	23	24
5. SCHOOL																									
	WEEKDAY:	0	0	0	0	0	0	0	5	75	90	90	80	80	80	80	45	15	5	15	20	20	10	0	0
OCCUPANCY	SATURDAY:	0	0	0	0	0	0	0	0	10	10	10	10	10	0	0	0	0	0	0	0	0	0	0	0
	SUNDAY:	0	0	0	0	0	0	0	0	0	0	0	0	0	0	0	0	0	0	0	0	0	0	0	0
SCHOOL	WEEKDAY:	0	0	0	0	0	0	0	30	85	95	95	95	80	80	80	70	50	50	35	35	35	30	0	0
LTNG&RECEP	SATURDAY:	0	0	0	0	0	0	0	0	15	15	15	15	15	0	0	0	0	0	0	0	0	0	0	0
	SUNDAY:	0	0	0	0	0	0	0	0	0	0	0	0	0	0	0	0	0	0	0	0	0	0	0	0
SCHOOL	WEEKDAY:	Off	Off	Off	Off	Off	Off	Off	On	On	On	On	On	On	On	On	On	On	On	On	On	On	On	On	On
HVAC	SATURDAY:	Off	Off	Off	Off	Off	Off	Off	Off	On	On	On	On	On	On	On	On	On	On	On	On	On	On	On	On
	SUNDAY:	Off	Off	Off	Off	Off	Off	Off	Off	Off	Off	On	On	On	On	On	On	On	On	On	On	On	On	On	On
SCHOOL	WEEKDAY:	0	0	0	0	0	0	0	5	30	55	60	70	75	80	60	60	5	5	15	20	20	20	20	0
SWH	SATURDAY:	0	0	0	0	0	0	0	0	0	0	0	0	0	0	0	0	0	0	0	0	0	0	0	0
	SUNDAY:	0	0	0	0	0	0	0	0	0	0	0	0	0	0	0	0	0	0	0	0	0	0	0	0
	WEEKDAY:	90	90	90	90	90	90	70	40	40	20	20	20	20	20	20	30	50	50	50	70	70	80	90	90
6. HOTEL/MOTEL																									
OCCUPANCY	SATURDAY	90	90	90	90	90	90	70	50	50	30	30	30	30	30	30	30	30	50	60	60	60	70	70	70
	SUNDAY:	70	70	70	70	70	70	70	70	50	50	50	30	20	20	20	20	30	40	40	60	60	80	80	80
HOTEL/MOTEL	WEEKDAY:	20	15	10	10	10	20	40	50	40	40	25	25	25	25	25	25	25	25	60	80	90	80	60	30
LTNG&RECEP	SATURDAY	20	20	10	10	10	10	30	30	40	40	30	25	25	25	25	25	25	25	60	70	70	70	60	30
	SUNDAY:	30	30	20	20	20	20	30	40	40	30	30	30	30	20	20	20	20	20	50	70	80	60	50	30
HOTEL/MOTEL	WEEKDAY:	On	On	On	On	On	On	On	On	On	On	On	On	On	On	On	On	On	On	On	On	On	On	On	On
HVAC	SATURDAY:	On	On	On	On	On	On	On	On	On	On	On	On	On	On	On	On	On	On	On	On	On	On	On	On
	SUNDAY:	On	On	On	On	On	On	On	On	On	On	On	On	On	On	On	On	On	On	On	On	On	On	On	On
HOTEL/MOTEL	WEEKDAY:	20	15	15	15	20	25	50	60	55	45	40	45	40	35	30	30	30	40	55	60	50	55	45	25
SWH	SATURDAY:	20	15	15	15	20	25	40	50	50	50	45	50	50	45	40	40	34	40	55	55	50	55	40	25
	SUNDAY:	25	20	20	20	20	30	50	50	50	55	50	50	40	40	40	30	30	40	50	50	40	50	40	30

Table 513.2.b
BUILDING SCHEDULE PERCENTAGE MULTIPLIERS (cont.)

7. RESTAURANT		1	2	3	4	5	6	7	8	9	10	11	12	13	14	15	16	17	18	19	20	21	22	23	24
	WEEKDAY:	15	15	5	0	0	0	0	5	5	5	20	50	80	70	40	20	25	50	80	80	80	50	35	20
OCCUPANCY	SATURDAY:	30	25	5	0	0	0	0	0	5	5	20	45	50	50	35	30	30	30	70	90	70	65	55	35
	SUNDAY:	20	20	5	0	0	0	0	0	0	0	0	20	25	25	15	20	25	35	55	65	70	35	20	20
RESTAURANT	WEEKDAY:	15	15	15	15	15	20	40	40	60	60	90	90	90	90	90	90	90	90	90	90	90	90	50	30
LTNG & RECEP	SATURDAY:	20	15	15	15	15	15	30	30	60	60	80	80	80	80	80	80	80	90	90	90	90	90	50	30
	SUNDAY:	20	15	15	15	15	15	30	30	50	70	70	70	70	70	70	70	60	60	60	60	60	60	50	30
RESTAURANT	WEEKDAY:	On	On	On	Off	Off	Off	Off	On	On	On	On	On	On	On	On	On	On	On	On	On	On	On	On	On
HVAC	SATURDAY:	On	On	On	Off	Off	Off	Off	Off	Off	On	On	On	On	On	On	On	On	On	On	On	On	On	On	On
	SUNDAY:	On	On	On	Off	Off	Off	Off	Off	Off	Off	On	On	On	On	On	On	On	On	On	On	On	On	On	On
RESTAURANT	WEEKDAY:	20	15	15	0	0	0	0	60	55	45	40	45	40	35	30	30	30	40	55	60	50	55	45	25
SWH	SATURDAY:	20	15	15	0	0	0	0	0	0	50	45	50	50	45	40	40	35	40	55	55	50	55	40	30
	SUNDAY:	25	20	20	0	0	0	0	0	0	0	50	50	40	40	30	30	30	40	50	50	40	50	40	20
	WEEKDAY:	0	0	0	0	0	0	0	10	50	80	80	80	80	80	80	80	80	50	30	30	20	20	0	0
8. HEALTH																									
OCCUPANCY	SATURDAY:	0	0	0	0	0	0	0	10	30	40	40	40	40	40	40	40	40	10	10	0	0	0	0	0
	SUNDAY:	0	0	0	0	0	0	0	0	5	5	5	5	5	5	5	5	5	0	0	0	0	0	0	0
HEALTH	WEEKDAY:	0	0	0	0	0	0	0	50	90	90	90	90	90	90	90	90	90	30	30	30	30	30	0	0
LTNG & RECEP	SATURDAY:	0	0	0	0	0	0	0	20	40	40	40	40	40	40	40	40	40	40	10	0	0	0	0	0
	SUNDAY:	0	0	0	0	0	0	0	0	10	10	10	10	10	10	10	10	0	0	0	0	0	0	0	0
	WEEKDAY:	On	On	On	On	On	On	On	On	On	On	On	On	On	On	On	On	On	On	On	On	On	On	On	On
	SATURDAY:	On	On	On	On	On	On	On	On	On	On	On	On	On	On	On	On	On	On	On	On	On	On	On	On
	SUNDAY:	On	On	On	On	On	On	On	On	On	On	On	On	On	On	On	On	On	On	On	On	On	On	On	On
HEALTH	WEEKDAY:	0	0	0	5	5	5	80	70	50	40	20	20	25	25	50	50	70	70	35	20	15	15	5	0
SWH	SATURDAY:	0	0	0	0	0	0	20	45	50	50	35	30	30	30	70	90	70	65	55	35	30	25	5	0
	SUNDAY:	0	0	0	0	0	0	0	20	25	25	15	20	25	35	55	65	70	35	20	20	20	20	5	0

REVISED VERSION
September 14, 2000

Table 513.2.b
BUILDING SCHEDULE PERCENTAGE MULTIPLIERS (cont.)

NOTES FOR TABLE 513.2.b

(1) Reference: Recommendations for Energy Conservation Standards and Guidelines for New Commercial Buildings, Vol. III, App. A Pacific Northwest Laboratory, PNL-4870-8, 1983."

(2) Table 513.2.b contains multipliers for converting the nominal values for building occupancy (Table 515.2), receptacle power density (Table 516.2) service hot water (Table), and lighting energy (§434.515) into time series data for estimating building loads under the Standard Calculation Procedure."

(3) "For each standard building profile there are three series - one each for weekdays, Saturday and Sunday. There are 24 elements per series. These represent the multiplier that should be used to estimate building loads from 12 a.m. to 1 a.m. (series element #1) through 11 p.m. to 12 a.m. (series element #24). The estimated load for any hour is simply the multiplier from the appropriate standard profile multiplied by the appropriate value from the tables cited above."

(4) The Building HVAC System Schedule listed in Table 517.1.1 lists the hours when the HVAC system shall be considered "on" or "off" in accordance with §434.514."

§ 434.514 Lighting.

514.1 Interior Lighting Power Allowance (ILPA), for calculating the Energy Cost Budget shall be determined from subsection 401.3.2. The lighting power used to calculate the Design Energy Consumption shall be the actual adjusted power for lighting in the Proposed Design. If the lighting controls in the Proposed Design are more effective at saving energy than those required by subsection 401.3.1 and 401.3.2, the actual installed lighting power shall be used along with the schedules reflecting the action of the controls to calculate the Design Energy Consumption. This actual installed lighting

power shall not be adjusted by the Power Adjustment Factors listed in Table 514.1.

TABLE 514.1—POWER ADJUSTMENT FACTOR (PAF)

Automatic control device(s)	Standard PAF
(1) Occupancy Sensor	0.30
(2) Daylight Sensing Continuous Dimming	0.30
(3) Daylight Sensing Multiple Step Dimming	0.20
(4) Daylight Sensing On/Off	0.10
(5) Lumen Maintenance	0.10

514.2 Table 513.2.b establishes default assumptions for the percentage of the lighting load switched-on in each Prototype or Reference Building by hour of the day. These default assumptions can be changed when calculating the Energy Cost Budget to provide, for example, a 12-hour rather than an 8-hour workday.

§ 434.515 Receptacles.

515.1 Receptacle loads and profiles are default assumptions. The same assumptions shall be made in calculating Design Energy Consumption as were used in calculating the Energy Cost Budget.

515.2 Receptacle loads include all general service loads that are typical in a building. These loads exclude any process electrical usage and HVAC primary or auxiliary electrical usage. Table 515.2, Receptacle Power Densities, establishes the density, in W/ft^2, to be used for each building type. The receptacle energy profiles shall be the same as the lighting energy profiles in Table 513.2.b. This profile establishes the percentage of the receptacle load that is switched on by hour of the day and by building type.

TABLE 515.2—RECEPTACLE POWER DENSITIES

Building type	W/ft^2 of conditioned floor area
Assembly	0.25
Office	0.75
Retail	0.25
Warehouse	0.1
School	0.5
Hotel/Motel	0.25
Restaurant	0.1
Health	1.0
Multi-family High Rise Residential.	

Included in Lights and Equipment portions of Tables 512.2 a and b.

§ 434.516 Building exterior envelope.

516.1 *Insulation and Glazing*. The insulation and glazing characteristics of the Prototype and Reference Building envelope shall be determined by using the first column under ''Base Case'', with no assumed overhangs, for the appropriate Alternate Component Tables (ACP) in Table 402.4.1.2, as defined by climate range. The insulation and glazing characteristics from this ACP are prescribed assumptions for Prototype and Reference Buildings for calculating the Energy Cost Budget. In calculating the Design Energy Consumption of the Proposed Design, the envelope characteristics of the Proposed Design shall be used.

516.2 *Infiltration*. For Prototype and Reference Buildings, the infiltration assumptions in subsection 516.2.1 shall be prescribed assumptions for calculating the Energy Cost Budget and default assumptions for the Design Energy Consumption. Infiltration shall impact perimeter zones only.

516.2.1 When the HVAC system is switched ''on,'' no infiltration shall be assumed. When the HVAC system is switched ''off,'' the infiltration rate for buildings with or without operable windows shall be assumed to be 0.038 cfm/ft^2 of gross exterior wall. Hotels/motels and multi-family high-rise residential buildings shall have infiltration rates of 0.038 cfm/ft^2 of gross exterior wall area at all times.

516.3 *Envelope and Ground Absorptivities*. For Prototype and Reference Buildings, absorptivity assumptions shall be prescribed assumptions for computing the Energy Cost Budget and default assumptions for computing the Design Energy Consumption. The solar absorptivity of opaque elements of the building envelope is assumed to be 70%. The solar absorptivity of ground surfaces is assumed to be 80% (20% reflectivity).

516.4 *Window Management*. For the Prototype and Reference Building, window management drapery assumptions shall be prescribed assumptions for setting the Energy Cost Budget. No draperies shall be the default assumption for computing the Design Energy Consumption. Glazing is assumed to be internally shaded by medium-weight draperies, closed one-half time. The

draperies shall be modeled by assuming that one-half the area in each zone is draped and one-half is not. If manually-operated draperies, shades, or blinds are to be used in the Proposed Design, the Design Energy Consumption shall be calculated by assuming they are effective over one-half the glazing area in each zone.

516.5 *Shading*. For Prototype and Reference buildings and the Proposed Design, shading by permanent structures, terrain, and vegetation shall be taken into account for computing energy consumption, whether or not these features are located on the building site. A permanent fixture is one that is likely to remain for the life of the Proposed Design.

§ 434.517 HVAC systems and equipment.

517.1 The specifications and requirements for the HVAC systems of the Prototype and Reference Buildings shall be those in Table 517.1.1, HVAC Systems for Prototype and Reference Buildings. For the calculation of the Design Energy Consumption, the HVAC systems and equipment of the Proposed Design shall be used.

517.2 The systems and types of energy presented in Table 517.1.1 are assumptions for calculating the Energy Cost Budget. They are not requirements for either systems or the type of energy to be used in the Proposed Building or for the calculation of the Design Energy Cost.

TABLE 517.1.1—HVAC SYSTEMS OF PROTOTYPE AND REFERENCE BUILDINGS [1] [2]

Building/space occupancy	System No. (Table 517.4.1)	Remarks (Table 517.4.1)
Assembly:		
a. Churches (any size)	1	
b. ≤50,000 ft² or ≤3 floors	1 or 3	Note 1.
c. >50,000 ft² or >3 floors	3	
Office:		
a. ≤20,000 ft²	1	
b. ≤50,000 ft² and either ≤3 floors or ≤75,000 ft²	4	
c. <75,000 ft² or >3 floors	5	
Retail:		
a. ≤50,000 ft²	1 or 3	Note 1.
b. >50,000 ft²	4 or 5	Note 1.
Warehouse	1	Note 1.
School:		
a. ≤75,000 ft² or ≤3 floors	1	
b. >75,000 ft² or >3 floors	3	
Hotel/Motel:		
a. ≤3 stories	2 or 7	Note 5, 7.
b. >3 stories	6	Note 6.
Restaurant	1 or 3	Note 1.
Health:		
a. Nursing Home (any size)	2 or 7	Note 7.
b. ≤15,000 ft²	1	
c. <15,000 ft² or ≤50,000 ft²	4	Note 2.
d. >50,000 ft²	5	Note 2, 3.
Multi-family High Rise Residential >3 stories	7	

[1] Space and Service Water Heating budget calculations shall be made using both electricity and natural gas. The Energy Cost Budget shall be the lower of these two calculations. If natural gas is not available at the rate, electricity and #2 fuel oil shall be used for the budget calculations.

[2] The system and energy types presented in this Table are not intended as requirements or recommendations for the proposed design. Floor areas below are the total conditioned floor areas for the listed occupancy type in the building. The number of floors indicated below is the total number of occupied floors for the listed occupancy type.

517.3 *HVAC Zones*. HVAC zones for calculating the Energy Cost Budget of the Prototype or Reference Building shall consist of at least four perimeter and one interior zones per floor. Prototype Buildings shall have one perimeter zone facing each cardinal direction. The perimeter zones of Prototype and Reference Buildings shall be 15 ft in width, or one-third the narrow dimension of the building, when this dimension is between 30 ft and 45 ft inclusive, or one-half the narrow dimension of the building when this dimension is less than 30 ft. Zoning requirements shall be a default assumption for calculating the Energy Cost Budget. For multi-family high-rise residential

buildings, the prototype building shall have one zone per dwelling unit. The proposed design shall have one zone per unit unless zonal thermostatic controls are provided within units; in this case, two zones per unit shall be modeled. Building types such as assembly or warehouse may be modeled as a single zone if there is only one space.

517.4 For calculating the Design Energy Consumption, no fewer zones shall be used than were in the Prototype and Reference Buildings. The zones in the simulation shall correspond to the zones provided by the controls in the Proposed Design. Thermally similar zones, such as those facing one orientation on different floors, may be grouped together for the purposes of either the Design Energy Consumption or Energy Cost Budget simulation.

TABLE 517.4.1—HVAC SYSTEM DESCRIPTION FOR PROTOTYPE AND REFERENCE BUILDINGS [1] [2]

HVAC component	System #1	System #2	System #3	System #4
System Description	Packaged rooftop single room, one unit per zone.	Packaged terminal air conditioner with space heater or heat pump, one heating/cooling unit per zone.	Air handler per zone with central plant.	Packaged rooftop VAV w/perimeter reheat.
Fan system—Design supply circulation rate.	Note 9	Note 10	Note 9	Note 9.
Supply fan total static pressure.	1.3 in. W.C	N/A	2.0 in. W.C	3.0 in. W.C.
Combined supply fan, motor, and drive efficiency.	40%	N/A	50%	45%.
Supply fan control	Constant volume	Fan Cycles with call for heating or cooling.	Constant volume	VAV w/forward curved centrifugal fan and variable inlet vanes.
Return fan total static pressure.	N/A	N/A	0.6 in. W.C.	0.6 in. W.C.
Combined return fan, motor, and drive efficiency.	N/A	N/A	25%	25%.
Return fan control	N/A	N/A	Constant volume	VAV w/forward curved centrifugal fan and discharge dampers.
Cooling System	Direct expansion air cooled.	Direct expansion air cooled.	Chilled water (Note 1)	Direct expansion air cooled.
Heating System	Furnace, heat pump, or electric resistance (Note 8).	Heat pump w/electric resistance auxiliary or air conditioner w/space heater (Note 8).	Hot water (Note 8, 12)	Hot water (Note 12) or electric resistance (Note B).
Remarks	Dry bulb economizer per Section 7.4.3 (barometric relief).	No economizer	Dry bulb economizer per Section 434.514.	Dry bulb economizer per Section 434.514. Minimum VAV setting per 434.514 exception 1. Supply air reset by zone of greatest cooling demand.

[1] The systems and energy types presented in this Table are not intended as requirements or recommendations for the proposed design.
[2] For numbered notes see end of Table 517.4.1.

TABLE 517.4.1—HVAC SYSTEM DESCRIPTION FOR PROTOTYPE AND REFERENCE BUILDINGS [1]

HVAC component	Systems #5	System #6	System #7
System Description	Built-up central VAV with perimeter reheat.	Fourpipe fan coil per zone with central plant.	Water source heat pump
Fan system—Design supply circulation rate.	Note 9	Note 9	Note 10.
Supply fan total static pressure	4.0 in W.C	0.5 in W.C	0.5 in. W.C.
Combined supply fan, motor, and drive efficiency.	55%	25A	25%.

TABLE 517.4.1—HVAC SYSTEM DESCRIPTION FOR PROTOTYPE AND REFERENCE BUILDINGS [1]—Continued

HVAC component	Systems #5	System #6	System #7
Supply fan control	VAV w/air-foil centrifugal fan and AC frequency variable speed drive.	Fan Cycles with call for heating or cooling.	Fan cycles w/call for heating or cooling.
Return fan total static pressure	1.0 in W.C	N/A	N/A.
Combined return fan, motor, and drive efficiency.	30%	N/A	N/A.
Return fan control	VAV with air-foil centrifugal fan and AC frequency variable speed drive.	N/A	N/A.
Cooling System	Chilled water (Note 11)	Chilled water (Note 11)	Closed circuit, centrifugal blower type cooling tower sized per Note 11. Circulating pump sized for 2.7 GPM per ton.
Heating System	Hot water (Note 12) or electric resistance (Note 8).	Hot water (Note 12) or electric resistance (Note 8).	Electric or natural draft fossil fuel boiler (Note 8).
Remarks	Dry bulb economizer per Section 7.4.3. Minimum VAV setting per Section 7.4.4.3. Supply air reset by zone of greatest cooling demand.	No economizer	Tower fans and boiler cycled to maintain circulating water temperature between 60 and design tower leaving water temperature.

NUMBERED NOTES FOR TABLE 517.4.1

HVAC System Descriptions for Prototype and Reference Buildings

Notes:

1. For occupancies such as restaurants, assembly and retail which are part of a mixed use building which, according to Table 517.4.1, includes a central chilled water plant (systems 3, 5, or 6), chilled water system type 3 or 5, as indicated in the Table, shall be used.

2. Constant volume may be used in zones where pressurization relationships must be maintained by code. VAV shall be used in all other areas, in accordance with § 517.4

3. Provide run-around heat recovery systems for all fan systems with minimum outside air intake greater than 75%. Recovery effectiveness shall be 0.60.

4. If a warehouse is not intended to be mechanically cooled, both the Energy Cost Budgets and Design Energy Costs, may be calculated assuming no mechanical cooling.

5. The system listed is for guest rooms only. Areas such as public areas and back-of-house areas shall be served by system 4. Other areas such as offices and retail shall be served by the systems listed in Table 517.4.1 for those occupancy types.

6. The system listed is for guest rooms only. Areas such as public areas and back-of-house areas shall be served by System 5. Other areas such as offices and retail shall be served by the systems listed in Table 517.4.1.1 for those occupancy types.

7. System 2 shall be used for Energy Cost Budget calculation except in areas with design heating outside air temperatures less than 10 °F.

8. Prototype energy budget cost calculations shall be made using both electricity and natural gas. If natural gas is not available at the site, electricity and #2 fuel oil shall be used. The Energy Cost Budget shall be the lower of these results. Alternatively, the Energy Cost Budget may be based on the fuel source that minimizes total operating, maintenance, equipment, and installation costs for the prototype over the building lifetime. Equipment and installation cost estimates shall be prepared using professionally recognized cost estimating tools, guides, and techniques. The methods of analysis shall conform to those of subpart A of 10 CFR part 436. Energy costs shall be based on actual costs to the building as defined in this Section.

9. Design supply air circulation rate shall be based on a supply air to room air temperature differences of 20 °F. A higher supply air temperature may be used if required to maintain a minimum circulation rate of 4.5 air changes per hour or 15 cfm per person at design conditions to each zone served by the system. If return fans are specified, they shall be sized from the supply fan capacity less the required minimum ventilation with outside air, or 75% or the supply air capacity, whichever is larger. Except where noted, supply and return fans shall be operated continually during occupied hours.

10. Fan System Energy when included in the efficiency rating of the unit as defined in § 403.2.4.3 need not be modeled explicitly for this system. The fan shall cycle with calls for heating or cooling.

11. Chilled water systems shall be modeled using a reciprocating chiller for systems with total cooling capacities less than 175 tons, and centrifugal chillers for systems

with cooling capacities of 175 tons or greater. For systems with cooling or 600 ton or more, the Energy Cost Budget shall be calculated using two centrifugal chillers lead/lag controlled. Chilled water pumps shall be sized using a 12 °F temperature rise, from 44 °F to 56 °F operating at 65 feed of head and 65% combined impeller and motor efficiency. Condenser water pumps shall be sized using a 10 °F temperature rise, operating at 60 feet of head and 60% combined impeller and motor efficiency. The cooling tower shall be an open circuit, centrifugal blower type sized for the larger of 85 °F leaving water temperature or 10 °F approach to design wet bulb temperature. The tower shall be controlled to provide a 65 °F leaving water temperature whenever weather conditions permit, floating up to design leaving water temperature at design conditions. Chilled water supply temperature shall be reset in accordance with § 434.518.

12. Hot water system shall include a natural draft fossil fuel or electric boiler per Note 8. The hot water pump shall be sized based on a 30 °F temperature drop, for 18 °F to 150 °F, operating at 60 feet of head and a combined impeller and motor efficiency of 60%. Hot water supply temperature shall be reset in accordance with § 434.518.

517.5 *Equipment Sizing and Redundant Equipment*. For calculating the Energy Cost Budget of Prototype or Reference Buildings, HVAC equipment shall be sized to meet the requirements of subsection 403.2.2, without using any of the exceptions. The size of equipment shall be that required for the building without process loads considered. Redundant or emergency equipment need not be simulated if it is controlled so that it will not be operated during normal operations of the building. The designer shall document the installation of process equipment and the size of process loads.

517.6 For calculating the Design Energy Consumption, actual air flow rates and installed equipment size shall be used in the simulation, except that excess capacity provided to meet process loads need not be modeled unless the process load was not modeled in setting Energy Cost Budget. Equipment sizing in the simulation of the Proposed Design shall correspond to the equipment actually selected for the design and the designer shall not use equipment sized automatically by the simulation tool.

517.6.1 Redundant or emergency equipment need not be simulated if it is controlled to not be operated during normal operations of the building.

§ 434.518 Service water heating.

518.1 The service water loads for Prototype and Reference Buildings are defined in terms of Btu/h per person in Table 518.1.1, Service Hot Water Quantities. The service water heating loads from Table 518.1.1 are prescribed assumptions for multi-family high-rise residential buildings and default assumptions for all other buildings. The same service water heating load assumptions shall be made in calculating Design Energy Consumption as were used in calculating the Energy Cost Budget.

TABLE 518.1.1—SERVICE HOT WATER QUANTITIES

Building type	Btu/person-hour [1]
Assembly	215
Office	175
Retail	135
Warehouse	225
School	215
Hotel/Motel	1110
Restaurant	390
Health	135
Multi-family High Rise Residential	[2] 1700

[1] This value is the number to be multiplied by the percentage multipliers of the Building Profile Schedules in Table 513.2.b. See Table 513.2.a for occupancy levels.

[2] Total hot water use per dwelling unit for each hour shall be 3,400 Btu/h times the multi-family high rise residential building SWH system multiplier from Table 513.2.b.

518.2 The service water heating system, including piping losses for the Prototype Building, shall be modeled using the methods of the RS–47 (incorporated by reference, see § 434.701) using a system that meets all requirements of subsection 404. The service water heating equipment for the Prototype or Reference Building shall be either an electric heat pump or natural gas, or if natural gas is not available at the site, #2 fuel oil. Exception: If electric resistance service water heating is preferable to an electric heat pump when analyzed according to the criteria of § 434.404.1.4 or when service water temperatures exceeding 145 °F are required for a particular application, electric resistance water heating may be used.

§ 434.519 Controls.

519.1 All occupied conditioned spaces in the Prototype, Reference and Proposed Design Buildings in all climates shall be simulated as being both heated and cooled. The assumptions in this subsection are prescribed assumptions. If the Proposed Design does not include equipment for cooling or heating, the Design Energy Consumption shall be determined by the specifications for calculating the Energy Cost Budget as described in Table 517.4.1 HVAC System Description for Prototype and Reference Buildings. Exceptions to 519.1 are as follows:

519.1.1 If a building is to be provided with only heating or cooling, both the Prototype or Reference Building and the Proposed Design shall be simulated, using the same assumptions. Such an assumption cannot be made unless the building interior temperature meets the comfort criteria of RS–2 (incorporated by reference, see § 434.701) at least 98% of the occupied hours during the year.

519.1.2 If warehouses are not intended to be mechanically cooled, both the Energy Cost Budget and Design Energy Consumption shall be modeled assuming no mechanical cooling; and

519.1.3 In climates where winter design temperature (97.5% occurrence) is greater than 59 °F, space heating need not be modeled.

519.2 Space temperature controls for the Prototype or Reference Building, except multi-family high-rise residential buildings, shall be set at 70 °F for space heating and 75 °F for space cooling with a deadband per subsection 403.2.6.3. The system shut off during off-hours shall be according to the schedule in Table 515.2, except that the heating system shall cycle on if any space should drop below the night setback setting of 55 °F. There shall be no similar setpoint during the cooling season. Lesser deadband ranges may be used in calculating the Design Energy Consumption. Exceptions to 519.2 are as follows:

(a) Setback shall not be modeled in determining either the Energy Cost Budget or Design Energy Cost if setback is not realistic for the Proposed Design, such as 24-hour/day operations. Health facilities need not have night setback during the heating season; and

(b) Hotel/motels and multi-family high-rise residential buildings shall have a night setback temperature of 60 °F from 11:00 p.m. to 6:00 a.m. during the heating season; and

(c) If deadband controls are not to be installed, the Design Energy Cost shall be calculated with both heating and cooling thermostat setpoints set to the same value between 70 °F and 75 °F inclusive, assumed to be constant for the year.

519.2.1 For multi-family buildings, the thermostat schedule for the dwelling units shall be as in Table 519.1.2, Thermostat Settings for Multi-Family High-rise Buildings. The Prototype Building shall use the single zone schedule. The Proposed Design shall use the two-zone schedule only if zonal thermostatic controls are provided. For Proposed Designs that use heat pumps employing supplementary heat, the controls used to switch on the auxiliary heat source during morning warm-up periods shall be simulated accurately. The thermostat assumptions for multi-family high-rise buildings are prescribed assumptions.

519.3 When providing for outdoor air ventilation in calculating the Energy Cost Budget, controls shall be assumed to close the outside air intake to reduce the flow of outside air to 0 cfm during setback and unoccupied periods. Ventilation using inside air may still be required to maintain scheduled setback temperature. Outside air ventilation, during occupied periods, shall be as required by RS–41, (incorporated by reference, see § 434.701) or the Proposed Design, whichever is greater.

519.4 If humidification is to be used in the Proposed Design, the same level of humidification and system type shall be used in the Prototype or Reference Building. If dehumidification requires subcooling of supply air, then reheat for the Prototype or Reference Building shall be from recovered waste heat such as condenser waste heat.

TABLE 519.1.2—THERMOSTAT SETTINGS FOR MULTI-FAMILY HIGH-RISE RESIDENTIAL BUILDINGS

Time of day	Single zone dwelling unit		Two zone dwelling unit			
	Heat	Cool	Bedrooms/bathrooms		Other rooms	
			Heat	Cool	Heat	Cool
Midnight–6 a.m.	60	78	60	78	60	85
6 a.m.–9 a.m.	70	78	70	78	70	78
9 a.m.–5 p.m.	70	78	60	85	70	78
5 p.m.–11 p.m.	70	78	70	78	70	78
11 p.m.–Midnight	60	78	60	78	60	78

§ 434.520 Speculative buildings.

520.1 Lighting. The interior lighting power allowance (ILPA) for calculating the Energy Cost Budget shall be determined from Table 401.3.2a. The Design Energy Consumption may be based on an assumed adjusted lighting power for future lighting improvements.

520.2 The assumption about future lighting power used to calculate the Design Energy Consumption must be documented so that the future installed lighting systems may be in compliance with these standards. Documentation must be provided to enable future lighting systems to use either the Prescriptive method or the Systems Performance method of subsection 401.3.

520.3 Documentation for future lighting systems that use subsection 401.3 shall be stated as a maximum adjusted lighting power for the tenant spaces. The adjusted lighting power allowance for tenant spaces shall account for the lighting power provided for the common areas of the building.

520.4 Documentation for future lighting systems that use subsection 401.3 shall be stated as a required lighting adjustment. The required lighting adjustment is the whole building lighting power assumed in order to calculate the Design Energy Consumption minus the ILPA value from Table 401.3.2c that was used to calculate the Energy Cost Budget. When the required lighting adjustment is less than zero, a complete lighting design must be developed for one or more representative tenant spaces, demonstrating acceptable lighting within the limits of the assumed lighting power allowance.

520.5 HVAC Systems and Equipment. If the HVAC system is not completely specified in the plans, the Design Energy Consumption shall be based on reasonable assumptions about the construction of future HVAC systems and equipment. These assumptions shall be documented so that future HVAC systems and equipment may be in compliance with these standards.

§ 434.521 The simulation tool.

521.1 Annual energy consumption shall be simulated with a multi-zone, 8760 hours per year building energy model. The model shall account for:

521.1.1 The dynamic heat transfer of the building envelope such as solar and internal gains;

521.1.2 Equipment efficiencies as a function of load and climate;

521.1.3 Lighting and HVAC system controls and distribution systems by simulating the whole building;

521.1.4 The operating schedule of the building including night setback during various times of the year; and

521.1.5 Energy consumption information at a level necessary to determine the Energy Cost Budget and Design Energy Cost through the appropriate utility rate schedules.

521.1.6 While the simulation tool should simulate an entire year on an hour by hour basis (8760 hours), programs that approximate this dynamic analysis procedure and provide equivalent results are acceptable.

521.1.7 Simulation tools shall be selected for their ability to simulate accurately the relevant features of the building in question, as shown in the tool's documentation. For example, a single-zone model shall not be used to simulate a large, multi-zone building, and a steady-state model such as the degree-day method shall not be used to simulate buildings when equipment efficiency or performance is significantly affected by the dynamic patterns of

weather, solar radiation, and occupancy. Relevant energy-related features shall be addressed by a model such as daylighting, atriums or sunspaces, night ventilation or thermal storage, chilled water storage or heat recovery, active or passive solar systems, zoning and controls of heating and cooling systems, and ground-coupled buildings. In addition, models shall be capable of translating the Design Energy Consumption into energy cost using actual utility rate schedules with the coincidental electrical demand of a building. Examples of public domain models capable of handling such complex building systems and energy cost translations available in the United States are DOE—2.1C and BLAST 3.0 and in Canada, Energy Systems Analysis Series.

521.1.8 All simulation tools shall use scientifically justifiable documented techniques and procedures for modeling building loads, systems, and equipment. The algorithms used in the program shall have been verified by comparison with experimental measurements, loads, systems, and equipment.

Subpart F—Building Energy Compliance Alternative

§ 434.601 General.

601.1 This subpart provides an alternative path for compliance with the standards that allow for greater flexibility in the design of energy efficient buildings using an annual energy use method. This path provides an opportunity for the use of innovative designs, materials, and equipment such as daylighting, passive solar heating, and heat recovery, that may not be adequately evaluated by methods found in subpart D.

601.2 The Building Energy Compliance Alternative shall be used with subpart C and subpart D, 401.1, 401.2, 401.3.4 and in conjunction with the minimum requirements found in subsections 402.1, 402.2, and 402.3., 403.1, 403.2.1–7, 403.2.9 and 404.

601.3 Compliance under this section is demonstrated by showing that the calculated annual energy usage for the Proposed Design is less than or equal to a calculated Energy Use Budget. (See Figure 601.3, Building Energy Compliance Alternative). The analytical procedures in this subpart are only for determining design compliance, and are not to be used either to predict, document or verify annual energy consumption.

Figure 601.3

Building Energy Compliance Alternative

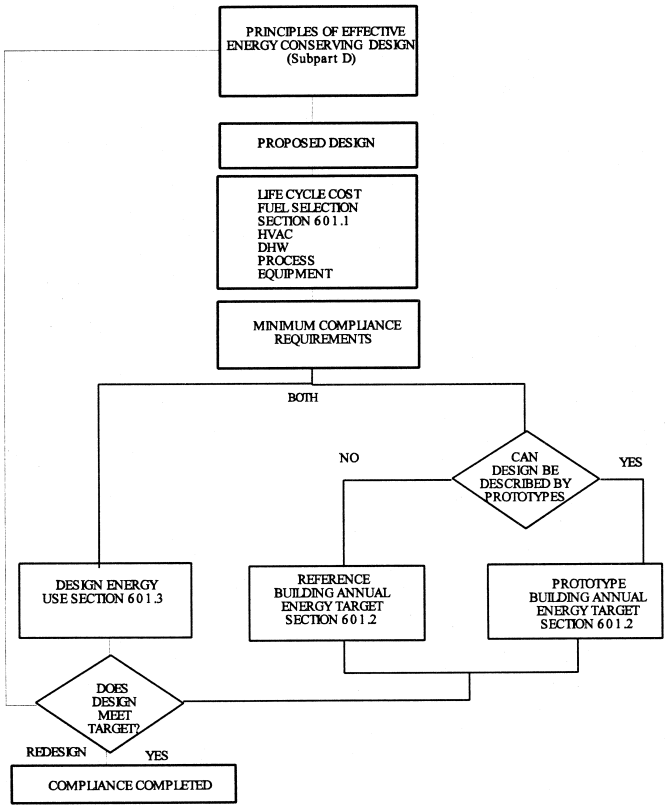

213

REVISED VERSION
September 14, 2000

601.4 Compliance under the Building Energy Use Budget method requires a detailed energy analysis, using a conventional simulation tool, of the Proposed Design. A life cycle cost analysis shall be used to select the fuel source for the HVAC systems, service hot water, and process loads from available alternatives. The Annual Energy Consumption of the Proposed Design with the life cycle cost-effective fuel selection is calculated to determine the modeled energy consumption, called the Design Energy Use.

601.5 The Design Energy Use is defined as the energy that is consumed within the five foot line of a proposed building per ft^2 over a 24-hour day, 365-

day year period and specified operating hours. The calculated Design Energy Use is then compared to a calculated Energy Use Budget.

601.6 *Compliance*. The Energy Use Budget is determined by calculating the annual energy usage for a Reference or Prototype Building that is configured to comply with the provisions of subpart E for such buildings, except that the fuel source(s) of the Prototype or Reference Building shall be the same life cycle cost-effective source(s) selected for the Proposed Design. If the Design Energy Use is less than or equal to the Energy Use Budget then the proposed design complies with these standards.

601.7 This section provides instructions for determining the Design Energy Use and for calculating the Energy Use Budget. The Energy Use Budget is the highest allowable calculated annual energy consumption for a specified building design. Designers are encouraged to design buildings whose Design Energy Use is lower than the Energy Use Budget.

§ 434.602 Determination of the annual energy budget.

602.1 The Energy Use Budget shall be calculated for the appropriate Prototype or Reference Building in accordance with the procedures prescribed in subsection 502 with the following exceptions: The Energy Use Budget shall be stated in units of Btu/ft^2/yr and the simulation tool shall segregate the calculated energy consumption by fuel type producing an Energy Use Budget for each fuel (the fuel selections having been made by a life cycle cost analysis in determining the proposed design).

602.2 The Energy Use Budget is calculated similarly for the Reference or Prototype Building using equation 602.2.

$$EUB = EUB_1 x f_1 + EUB_2 x f_2 + ... + EUB_i x f_i \qquad \text{Equation 602.2}$$

Where EUB_1, EUB_2, EUB_i are the calculated annual energy targets for each fuel used in the Reference or Prototype building and f_1, f_2, . . . f_i are the energy conversion factors given in Table 602.2, Fuel Conversion Factors for Computing Design Annual Energy Uses. In lieu of case by case calculation of the Energy Use Budget, the designer may construct Energy Use Budget tables for the combinations of energy source(s) that may be considered in a set of project designs, such as electric heating, electric service water, and gas cooling or oil heating, gas service water and electric cooling. The values in such optional Energy Use Budget tables shall be equal to or less than the corresponding Energy Use Budgets calculated on a case by case basis according to this section. Energy Use Budget tables shall be constructed to correspond to the climatic regions and building types in accordance with provisions for Prototype or Reference Building models in subpart E of this part.

TABLE 602.2—FUEL CONVERSION FACTORS, FOR COMPUTING DESIGN ANNUAL ENERGY USES

Fuels	Conversion factor
Electricity	3412 Btu/kilowatt hour.
Fuel Oil	138,700 Btu/gallon.
Natural Gas	1,031,000 Btu/1000 ft^2.
Liquified Petroleum (including Propane and Butane)	95,5000 Btu/gallon.
Anthracite Coal	28,300,000 Btu/short ton.
Bituminous Coal	24,580,000 Btu/short ton.
Purchase Steam and Steam from Central Plants	1,000 Btu/Pound.
High Temperature or Medium Temperature Water from Central Plants.	Use the heat value based on the water actually delivered at the building five foot line.

NOTE: At specific locations where the energy source Btu content varies significantly from the value presented above then the local fuel value may be used provided there is supporting documentation from the fuel source supplier stating this actual energy value and varifying that this value will remain consistent for the foreseeable future. The fuel content for fuels not given this table shall be determined from the best available source.

§ 434.603 Determination of the design energy use.

603.1 The Design Energy Use shall be calculated by modeling the Proposed Design using the same methods, assumptions, climate data, and simulation tool as were used to establish the Energy Use Budget, but with the design features that will be used in the final building design. The simulation tool used shall segregate the calculated energy consumption by fuel type giving an annual Design Energy Use for each fuel. The sum of the Design Energy Uses multiplied by the fuel conversion factors in Table 602.2 yields the Design Energy Use for the proposed design:

$$DEU = DEU_1 x f_1 + DEU_2 x f_2 + ... + DEU_i x f_i \qquad \text{Equation 603.1}$$

Where f_1, f_2, * * * f_i are the fuel conversion factors in Table 602.2.

603.2 *Required Life Cycle Cost Analysis for Fuel Selection*.

603.2.1 Fuel sources selected for the Proposed Design and Prototype or Reference buildings shall be determined by considering the energy cost and other costs and cost savings that occur during the expected economic life of the alternative.

603.2.2 The designer shall use the procedures set forth in subpart A of 10 CFR part 436 to make this determination. The fuel selection life cycle cost analysis shall include the following steps:

603.2.2.1 Determine the feasible alternatives for energy sources of the Proposed Design's HVAC systems, service hot water, and process loads.

603.2.2.2 Model the Proposed Design including the alternative HVAC and service water systems and conduct an annual energy analysis for each fuel source alternative using the simulation tool specified in this section. The annual energy analysis shall be computed on a monthly basis in conformance with subpart E with the exception that all process loads shall be included in the calculation. Separate the output of the analysis by fuel type.

603.2.2.3 Determine the unit price of each fuel using information from the utility or other reliable local source. During rapid changes in fuel prices it is recommended that an average fuel price for the previous twelve months be used in lieu of the current price. Calculate the annual energy cost of each energy source alternative in accordance with procedures in subpart E for the Design Energy Cost. Estimate the initial cost of the HVAC and service water systems and other initial costs such as energy distribution lines and service connection fees associated with each fuel source alternative. Estimate other costs and benefits for each alternative including, but not necessarily limited to, annual maintenance and repair, periodic and one time major repairs and replacements and salvage of the energy and service water systems. Cost estimates shall be prepared using professionally recognized cost estimating tools, guides and techniques.

603.2.2.4 Perform a life cycle cost analysis using the procedure specified in subsection 603.2.

603.2.2.5 Compare the total life cycle cost of each energy source alternative. The alternative with the lowest total life cycle cost shall be chosen as the energy source for the proposed design.

§ 434.604 Compliance.

604.1 Compliance with this section is demonstrated if the Design Energy Use is equal to or less than the Energy Use Budget.

$$DEU < EUB \qquad \text{Equation 604.1}$$

604.2 The energy consumption shall be measured at the building five foot line for all fuels. Energy consumed from non-depletable energy sources and heat recovery systems shall not be included in the Design Energy Use calculations. The thermal efficiency of fixtures, equipment, systems or plants in the proposed design shall be simulated by the selected calculation tool.

§ 434.605 Standard Calculation Procedure.

605.1 The Standard Calculation Procedure consists of methods and assumptions for calculating the Energy Use Budgets for Prototype and Reference Buildings and the Energy Use for the Proposed Design. In order to maintain consistency between the Energy Use Budgets and the Design Energy Use, the input assumptions stated in subsection 510.2 are to be used.

605.2 The terms Energy Cost Budget and Design Energy Cost or Design Energy Consumption used in subpart E of this part correlate to Energy Use Budget and Design Energy Use, respectively, in subpart F of this part.

§ 434.606 Simulation tool.

606.1 The criteria established in subsection 521 for the selection of a simulation tool shall be followed when using the compliance path prescribed in subpart F of this part.

§ 434.607 Life cycle cost analysis criteria.

607.1 The following life cycle cost criteria applies to the fuel selection requirements of this subpart and to option life cycle cost analyses performed to evaluate energy conservation design alternatives. The fuel source(s) selection shall be made in accordance with the requirements of subpart A of 10 CFR part 436. When performing optional life cycle cost analyses of energy conservation opportunities the designer may use the life cycle cost procedures of subpart A of 10 CFR part 436 or OMB Circular 1–94 or an equivalent procedure that meets the assumptions listed below:

607.1.1 The economic life of the Prototype Building and Proposed Design shall be 25 years. Anticipated replacements or renovations of energy related features and systems in the Prototype or Reference Building and Proposed Design during this period shall be included in their respective life cycle cost calculations.

607.1.2 The designer shall follow established professional cost estimating practices when determining the costs and benefits associated with the energy related features of the Prototype or Reference Building and Proposed Design.

607.1.3 All costs shall be expressed in current dollars. General inflation shall be disregarded. Differential escalation of prices (prices estimated to rise faster or slower than general inflation) for energy used in the life cycle cost calculations shall be those in effect at the time of the latest ''Annual Energy Outlook'' (DOE/EIA–0383) as published by the Department of Energy's Energy Information Administration.

607.1.4 The economic effects of taxes, depreciation and other factors not consistent with the practices of subpart A of 10 CFR part 436 shall not be included in the life cycle cost calculation.

Subpart G—Reference Standards

§ 434.701 General.

701.1 *General*. The standards, technical handbooks, papers, regulations, and portions thereof, that are referred to in the sections and subsections in the following list are hereby incorporated by reference into this part 434. The following standards have been approved for incorporation by reference by the Director of the Federal Register in accordance with 5 U.S.C. 522(a) and 1 CFR part 51. A notice of any change in these materials will be published in the FEDERAL REGISTER. The standards incorporated by reference are available for inspection at the U.S. Department of Energy, Office of Energy Efficiency, Hearings and Dockets, Forrestal Building, 1000 Independence Avenue SW, Washington, DC 20585, or at the National Archives and Records Administration (NARA). For information on the availability of this material at NARA, call 202–741–6030, or go to: *http://www.archives.gov/federal_register/code_of_federal_regulations/ibr_locations.html*. The standards may be purchased at the addresses listed at the end of each standard. The following standards are incorporated by reference in this part:

Ref. No.	Standard designation	CFR section
RS–1	ANSI/ASHRAE/IESNA 90.1–1989, Energy Efficient Design of New Buildings Except Low-Rise Residential Buildings, and Addenda 90.1b–1992, 90.1c–1993, 90.1d–1992, 90.1e–1992, 90.1f–1995, 90.1g–1993, 90.1i–1993, American Society of Heating, Refrigerating and Air-Conditioning Engineers, Inc., ASHRAE 1791 Tullie Circle NE, Atlanta, GA 30329.	434.301.1; 434.402.1.2.4; 434.402.4.2; 434.403.2.1.
RS–2	ANSI/ASHRAE 55–1992 including addenda 55a–1995, Thermal Environmental Conditions for Human Occupancy, American Society of Heating, Refrigerating and Air-Conditioning Engineers, Inc., 1791 Tullie Circle NE, Atlanta, GA 30329.	434.301.2; 434.519.1.1.
RS–3	NEMA MG1–1993, ''Motors and Generators,'' Revision No. 1, December 7, 1993, National Electrical Manufacturers Association, 1300 North 17th Street, Suite 1847, Rosslyn, VA 22209.	434.401.2.1.
RS–4	ASHRAE, Handbook, 1993 Fundamentals Volume, American Society of Heating, Refrigerating, and Air-Conditioning Engineers, Inc., 1791 Tullie Circle NE, Atlanta, GA 30329.	434.402.1.1; 434.402.1.2.1; 434.402.1.2.2; 434.402.1.2.4; 434.402.2.2.5.
RS–5	ASTM C 177–85 (Reapproved 1993), Test Method for Steady-State Heat Flux Measurements and Thermal Transmission Properties by Means of the Guarded-Hot-Plate Apparatus, American Society for Testing and Materials, 1916 Race Street, Philadelphia, PA 19103.	434.402.1.1; 434.402.1.2.1; 434.402.1.2.2.
RS–6	ASTM C 518–91, Test Method for Steady-State Heat Flux Measurements and Thermal Transmission Properties by Means of the Heat Flow Meter Apparatus, American Society for Testing and Materials, 1916 Race Street, Philadelphia, PA 19103.	434.402.1.1; 434.402.1.2.1; Table 402.1.2.2; Table 403.2.9.2.
RS–7	ASTM C 236–89 (Reapproved 1993), Test Method for Steady-State Thermal Performance of Building Assemblies by Means of a Guarded Hot Box, American Society for Testing and Materials, 1916 Race Street, Philadelphia, PA 19103.	434.402.1.1; 434.402.1.2.1; 434.402.1.2.2.
RS–8	ASTM C 976–90, Test Method for Thermal Performance of Building Assemblies by Means of a Calibrated Hot Box, American Society for Testing and Materials, 1916 Race Street, Philadelphia, PA 19103.	434.402.1.1; 434.402.1.2.1; 434.402.1.2.2.
RS–9	Report TVAHB–3007, 1981, ''Thermal Bridges in Sheet Metal Construction'' by Gudni Johannesson. Lund Institute of Technology, Lund, Sweden.	434.402.1.2.3.
RS–10	ASTM E 283–91, Test Method for Determining the Rate of Air Leakage Through Exterior Windows, Curtain Walls, and Doors Under Specified Pressure Difference Across the Specimen, American Society for Testing and Materials, 1916 Race Street, Philadelphia, PA 19103.	434.402.2; 434.402.2.1.
RS–11	ANSI/AAMA/NWWDA 101/I.S.2–97, Voluntary Specifications for Aluminum, Vinyl (PVC) and Wood Windows and Glass Doors, American Architectural Manufacturers Association, 1827 Walden Office Square, Suite 104, Schaumburg, IL 60173–4628.	434.402.2.1; 434.402.2.2.4.
RS–12	ASTM D 4099–95, Standard Specification for Poly (Vinyl Chloride) (PVC) Prime Windows/Sliding Glass Doors, American Society for Testing and Materials, 1916 Race Street, Philadelphia, PA 19103.	434.402.2.1.
RS–13	ANSI/AAMA/NWWDA 101/I.S.2–97, Voluntary Specifications for Aluminum, Vinyl (PVC) and Wood Windows and Glass Doors, National Wood Window and Door Association (formerly the National Woodwork Manufacturers Association), 1400 East Toughy Avenue, Suite 470, Des Plaines, IL 60018.	434.402.2.1.
RS–14	ANSI/NWWDA I.S.3–95, Wood Sliding Patio Doors, National Wood Window and Door Association (formerly the National Woodwork Manufacturers Association), 1400 East Toughy Avenue, Suite 470, Des Plaines, IL 60018.	434.402.2.2.1.
RS–15	ARI Standard 210/240–94, Unitary Air-Conditioning and Air-Source Heat Pump Equipment 1994. Air-Conditioning and Refrigeration Institute, 4301 North Fairfax Drive, Suite 425, Arlington, VA 22203.	434.403.1.
RS–16	ARI Standard 340/360–93, Commercial and Industrial Unitary Air-Conditioning and Heat Pump Equipment 1993 edition. Air-Conditioning and Refrigeration Institute, 4301 North Fairfax Drive, Suite 425, Arlington, VA 22203.	434.403.1.
RS–17	ARI 310/380–93, Packaged Terminal Air-Conditioners and Heat Pumps, 1993 edition. Air-Conditioning and Refrigeration Institute, 4301 North Fairfax Drive, Suite 425, Arlington, VA 22203.	434.403.1.
RS–18	NFRC 100–97, Procedure for Determining Fenestration Product Thermal Properties, National Fenestration Rating Council, Inc., 1300 Spring Street, Suite 500, Silver Spring, MD 20910.	434.402.1.2.4.
RS–19	NFRC 200—Procedure for Determining Fenestration Product Solar Heat Gain Coefficients at Normal Incidence (1995) National Fenestration Rating Council, Inc., 1300 Spring Street, Suite 500, Silver Spring, MD 20910.	434.402.1.2.4.
RS–20	Reserved.	
RS–21	Z21.47–1993, Gas-Fired Central Furnaces, including addenda Z21.47a–1995, American Gas Association, 400 North Capitol Street, N.W. Washington, DC 20001.	434.403.1.
RS–22	U.L. 727, including addendum dated January 30, 1996, Oil-Fired Central Furnaces (Eighth Edition) 1994, available from: Global Documents, 15 Inverness Way East, Englewood, CO 80112–5704, Underwriters Laboratories, Northbrook, IL 60062, 1994..	434.403.1.
RS–23	ANSI Z83.9–90, Including addenda Z83.9a–1992, Gas-Fired Duct Furnaces, 1990. (Addendum 90.1b) available from: Global Documents, 15 Inverness Way East, Englewood, CO 80112–5704.	434.403.1.
RS–24	ANSI Z83.8–96, Gas Unit Heater and Gas-Fired Duct Furnaces, American National Standards Institute, 11 West 42nd Street, New York, NY 10036.	434.403.1.

Ref. No.	Standard designation	CFR section
RS–25	U.L. 731, Oil-Fired Unit Heaters (Fifth Edition) 1995 available from: Global Documents, 15 Inverness Way East, Englewood, CO 80112–5704, Underwriters Laboratories, Northbrook, IL 60062.	434.403.1.
RS–26	CTI Standard–201, Standard for the Certification of Water-Cooling Towers Thermal Performance, November 1996, Cooling Tower Institute, P.O. Box 73383, Houston, TX 77273.	434.403.1.
RS–27	ARI Standard 320–93, Water-Source Heat Pumps, Air-Conditioning and Refrigeration Institute, 4301 North Fairfax Drive, Arlington, VA 22203.	434.403.1.
RS–28	ARI Standard 325–93, Ground Water-Source Heat Pumps, Air-Conditioning and Refrigeration Institute, 4301 North Fairfax Drive, Arlington, VA 22203.	434.403.1.
RS–29	ARI Standard 365–94, Commercial and Industrial Unitary Air-Conditioning Condensing Units, Air-Conditioning and Refrigeration Institute, 4301 North Fairfax Drive, Arlington, VA 22203.	434.403.1.
RS–30	ARI Standard 550–92, Centrifugal and Rotary Screw Water-Chilling Packages, Air-Conditioning and Refrigeration Institute, 4301 North Fairfax Drive, Arlington, VA 22203.	434.403.1.
RS–31	ARI Standard 590–92, Positive Displacement Compressor Water-Chilling Packages, Air-Conditioning and Refrigeration Institute, 4301 North Fairfax Drive, Arlington, VA 22203.	434.403.1.
RS–32	ANSI Z21.13–1991, including addenda Gas-Fired Low-Pressure Steam and Hot Water Boilers, Addenda Z21.13a–1993 and Z21–13b–1994, American National Standards Institute, 11 West 42nd Street, New York, NY 10036.	434.403.1.
RS–33	ANSI/U.L. 726 (7th edition, 1995), Oil-Fired Boiler Assemblies, available from: Global Documents, 15 Inverness Way East, Englewood, CO 80112–5704, Underwriters Laboratories, Northbrook, IL 60062.	434.403.1.
RS–34	HVAC Duct Construction Standards—Metal and Flexible, 2nd edition, 1995, Sheet Metal and Air-Conditioning Contractors' National Association, Inc., 4201 Lafayette Center Drive, Chantilly, VA 20151.	434.403.2.9.3.
RS–35	HVAC Air Duct Leakage Test Manual, 1st edition, 1985, Sheet Metal and Air-Conditioning Contractors' National Association, Inc., 4201 Lafayette Center Drive, Chantilly, VA 20151.	434.403.2.9.3; 434.403.1.
RS–36	Fibrous Glass Duct Construction Standards, 6th edition, 1992, Sheet Metal and Air-Conditioning Contractors National Association, Inc., 4201 Lafayette Center Drive, Chantilly, VA 20151.	434.403.2.9.3.
RS–37	Reserved.	
RS–38	ANSI Z21.56–1994, Gas-Fired Pool Heaters; Addenda Z21.56a–1996, American National Standards Institute, 11 West 42nd Street, New York, NY 10036; American Gas Association, 1515 Wilson Boulevard, Arlington, VA 22209.	Table 404.1.
RS–39	ANSI Z21.10.3–1993, Gas Water Heaters, Volume III, Storage with Input Ratings above 75,000 Btu's per Hour, Circulating and Instantaneous Water Heaters, American National Standards Institute, 11 West 42nd Street, New York, NY 10036; American Gas Association, 1515 Wilson Boulevard, Arlington, VA 22209.	Table 404.1; 434.404.1.1.
RS–40	ANSI/AHAM RAC–1–1992, Room Air Conditioners, Association of Home Appliance Manufacturers, 20 North Wacker Drive, Chicago, IL 60606.	434.403.1.
RS–41	ASHRAE Standard 62–1989, Ventilation for Acceptable Indoor Air Quality, American Society of Heating, Refrigerating and Air-Conditioning Engineers, 1791 Tulle Circle, Atlanta, GA 30329.	434.403.2.4; 434.403.2.8; 434.519.3.
RS–42	ANSI Z21.66–1996, Automatic Vent Damper Devices for Use with Gas-Fired Appliances, available from: Global Documents, 15 Inverness Way East, Englewood, CO 80112–5704..	434.404.1.
RS–43	NEMA MG 10–1994, Energy Management Guide for Selection and Use of Polyphase Motors, National Electric Manufacturers Association, National Electrical Manufacturers Association, 1300 North 17th Street, Suite 1847, Rosslyn, VA 22209.	434.401.2.1.
RS–44	NEMA MG 11–1977 (Revised 1982, 1987, Energy Management Guide for Selection and Use of Single-Phase Motors, National Electrical Manufacturers Association, National Electrical Manufacturers Association, 1300 North 17th Street, Suite 1847, Rosslyn, VA 22209.	434.401.2.1.
RS–45	ARI Standard 330–93, Ground-Source Closed-Loop Heat Pumps, Air-Conditioning and Refrigeration Institute, 4301 North Fairfax Drive, Arlington, VA 22209.	434.403.1.
RS–46	ARI Standard 560–92, Absorption Water Chilling and Water Heating Packages, Air-Conditioning and Refrigeration Institute, 4301 North Fairfax Drive, Arlington, VA 22209.	434.403.1.
RS–47	ASHRAE, Handbook, HVAC Applications; I-P Edition, 1995, American Society of Heating, Refrigerating, and Air-Conditioning Engineers, Inc., 1791 Tullie Circle NE, Atlanta, GA 30329.	434.518.2.

[65 FR 60012, Oct. 6, 2000, as amended at 69 FR 18803, Apr. 9, 2004]

PART 435—ENERGY EFFICIENCY STANDARDS FOR NEW FEDERAL LOW-RISE RESIDENTIAL BUILDINGS

Subpart A—Mandatory Energy Efficiency Standards for Federal Low-Rise Residential Buildings.

Sec.
435.1 Purpose and scope.
435.2 Definitions.
435.3 Material incorporated by reference.
435.4 Energy efficiency performance standard.
435.5 Performance level determination.
435.6 Sustainable principles for siting, design and construction. [Reserved]
435.7 Water used to achieve energy efficiency. [Reserved]
435.8 Life-cycle costing.

Subpart B—Voluntary Performance Standards for New Non-Federal Residential Buildings [Reserved]

Subpart C—Mandatory Energy Efficiency Standards for Federal Residential Buildings

435.300 Purpose.
435.301 Scope.
435.302 Definitions.
435.303 Requirements for the design of a Federal residential building.
435.304 The COSTSAFR Program.
435.305 Alternative compliance procedure.
435.306 Selecting a life cycle effective proposed building design.

AUTHORITY: 42 U.S.C. 6831–6832; 6834–6836; 42 U.S.C. 8253–54; 42 U.S.C. 7101 *et seq.*

SOURCE: 53 FR 32545, Aug. 25, 1988, unless otherwise noted.

Subpart A—Mandatory Energy Efficiency Standards for Federal Low-Rise Residential Buildings.

SOURCE: 71 FR 70283, Dec. 4, 2006.

§ 435.1 Purpose and scope.

This part establishes energy efficiency performance standard for the construction of new Federal low-rise residential buildings as required by section 305(a) of the Energy Conservation and Production Act, as amended (42 U.S.C. 6834(a)).

§ 435.2 Definitions.

For purposes of this part, the following terms, phrases and words shall be defined as follows:

Design for construction means the stage when the energy efficiency and sustainability details (such as insulation levels, HVAC systems, water-using systems, etc.) are either explicitly determined or implicitly included in a project cost specification.

DOE means U.S. Department of Energy.

Federal agency means any department, agency, corporation, or other entity or instrumentality of the executive branch of the Federal Government, including the United States Postal Service, the Federal National Mortgage Association, and the Federal Home Loan Mortgage Corporation.

ICC means International Code Council.

IECC means International Energy Conservation Code.

IECC Baseline Building 2004 means a building that is otherwise identical to the proposed building but is designed to meet, but not exceed, the energy efficiency specifications in the ICC International Energy Conservation Code, 2004 Supplement Edition, January 2005 (incorporated by reference, see § 435.3).

IECC Baseline Building 2009 means a building that is otherwise identical to the proposed building but is designed to meet, but not exceed, the energy efficiency specifications in the ICC International Energy Conservation Code, 2009 Edition, January 2009 (incorporated by reference, see § 435.3).

Life-cycle cost means the total cost related to energy conservation measures of owning, operating and maintaining a building over its useful life as determined in accordance with 10 CFR part 436.

Life-cycle cost-effective means that the proposed building has a lower life-cycle cost than the life-cycle costs of the baseline building, as described by 10 CFR 436.19, or has a positive estimated net savings, as described by 10 CFR 436.20, or has a savings-to-investment ratio estimated to be greater than one, as described by 10 CFR 436.21; or has an adjusted internal rate of return, as described by 10 CFR 436.22, that is estimated to be greater than the discount

rate as listed in OMB Circular Number A–94 ''Guidelines and Discount Rates for Benefit-Cost Analysis of Federal Programs.''

Low-rise residential building means any building three stories or less in height above grade that includes sleeping accommodations where the occupants are primarily permanent in nature (30 days or more).

New Federal building means any building to be constructed by, or for the use of, any Federal agency which is not legally subject to State or local building codes or similar requirements. A new building is a building constructed on a site that previously did not have a building or a complete replacement of an existing building from the foundation up.

Proposed building means the building design of a new Federal low-rise residential building proposed for construction.

[71 FR 70283, Dec. 4, 2006, as amended at 72 FR 72571, Dec. 21, 2007; 76 FR 49285, Aug. 10, 2011]

§ 435.3 Materials incorporated by reference.

(a) *General.* The Department of Energy incorporates by reference the energy performance standards listed in paragraph (b) of this section into 10 CFR part 435. The Director of the Federal Register has approved the material listed in paragraph (b) of this section for incorporation by reference in accordance with 5 U.S.C. 552(a) and 1 CFR part 51. Any subsequent amendment to a standard by the standard-setting organization will not affect DOE regulations unless and until DOE amends its energy performance standards. Material is incorporated as it exists on the date of the approval, and a notice of any change in the material will be published in the FEDERAL REGISTER. All approved material is available for inspection at the U.S. Department of Energy, Office of Energy Efficiency and Renewable Energy, Building Technologies Program, Sixth Floor, 950 L'Enfant Plaza, SW., Washington, DC 20024, (202) 586–2945. Also, this material is available for inspection at the National Archives and Records Administration (NARA). For information on the availability of this material at NARA, call 202–741–6030, or go to: *http://www.archives.gov/federal_register/code_of_federal_regulations/ibr_locations.html.*

(b) *ICC.* International Code Council, 500 New Jersey Avenue, NW., 6th Floor, Washington, DC 20001, 1–888–ICC–SAFE or (202) 370–1800, or go to *http://www.iccsafe.org/Pages/default.aspx.*

(1) ICC International Energy Conservation Code (IECC), 2004 Supplement Edition (''IECC 2004''), January 2005, ISBN 7801S04, IBR approved for §§ 435.2, 435.4, 435.5;

(2) ICC International Energy Conservation Code (IECC), 2009 Edition (''IECC 2009''), January 2009, ISBN 978–1–58001–742–8, IBR approved for §§ 435.2, 435.4, 435.5.

[76 FR 49285, Aug. 10, 2011]

§ 435.4 Energy efficiency performance standard.

(a)(1) All Federal agencies shall design new Federal buildings that are low-rise residential buildings, for which design for construction began on or after January 3, 2007, but before August 10, 2012, to:

(i) Meet the IECC 2004 (incorporated by reference, see § 435.3), and

(ii) If life-cycle cost-effective, achieve energy consumption levels, calculated consistent with paragraph (b) of this section, that are at least 30 percent below the levels of the IECC Baseline Building 2004.

(2) All Federal agencies shall design new Federal buildings that are low-rise residential buildings, for which design for construction began on or after August 10, 2012, to:

(i) Meet the IECC 2009 (incorporated by reference, see § 435.3), and

(ii) If life-cycle cost-effective, achieve energy consumption levels, calculated consistent with paragraph (b) of this section, that are at least 30 percent below the levels of the IECC Baseline Building 2009.

(b) Energy consumption for the purposes of calculating the 30 percent savings shall include space heating, space cooling, and domestic water heating.

(c) If a 30 percent reduction is not life-cycle cost-effective, the design of the proposed building shall be modified so as to achieve an energy consumption level at or better than the maximum

level of energy efficiency that is life-cycle cost-effective, but at a minimum complies with paragraph (a) of this section.

[71 FR 70283, Dec. 4, 2006, as amended at 72 FR 72571, Dec. 21, 2007; 76 FR 49285, Aug. 10, 2011]

§ 435.5 Performance level determination.

(a) For Federal buildings for which design for construction began on or after January 3, 2007, but before August 10, 2012, each Federal agency shall determine energy consumption levels for both the IECC Baseline Building 2004 and proposed building by using the Simulated Performance Alternative found in section 404 of the IECC 2004 (incorporated by reference, see § 435.3).

(b) For Federal buildings for which design for construction began on or after August 10, 2012, each Federal agency shall determine energy consumption levels for both the IECC Baseline Building 2009 and proposed building by using the Simulated Performance Alternative found in section 405 of the IECC 2009 (incorporated by reference, see § 435.3).

[76 FR 49285, Aug. 10, 2011]

§ 435.6 Sustainable principles for siting, design and construction. [Reserved]

§ 435.7 Water used to achieve energy efficiency. [Reserved]

§ 435.8 Life-cycle costing.

Each Federal agency shall determine life-cycle cost-effectiveness by using the procedures set out in subpart A of 10 CFR part 436. A Federal agency may choose to use any of four methods, including lower life-cycle costs, positive net savings, savings-to-investment ratio that is estimated to be greater than one, and an adjusted internal rate of return that is estimated to be greater than the discount rate as listed in OMB Circular Number A–94 ''Guidelines and Discount Rates for Benefit-Cost Analysis of Federal Programs.''

Subpart B—Voluntary Performance Standards for New Non-Federal Residential Buildings [Reserved]

Subpart C—Mandatory Energy Efficiency Standards for Federal Residential Buildings

§ 435.300 Purpose.

(a) This subpart establishes voluntary energy conservation performance standards for new residential buildings. The voluntary energy conservation performance standards are designed to achieve the maximum practicable improvements in energy efficiency and increases in the use of non-depletable sources of energy.

(b) Voluntary energy conservation performance standards prescribed under this subpart shall be developed solely as guidelines for the purpose of providing technical assistance for the design of energy conserving buildings, and shall be mandatory only for the Federal buildings for which design for construction began before January 3, 2007.

(c) The energy conservation performance standards will direct Federal policies and practices to ensure that cost-effective energy conservation features will be incorporated into the designs of all new Federal residential buildings for which design for construction began January 3, 2007.

[53 FR 32545, Aug. 25, 1988, as amended at 71 FR 70284, Dec. 4, 2006]

§ 435.301 Scope.

(a) The energy conservation performance standards in this subpart will apply to all Federal residential buildings for which design of construction began before January 3, 2007 except multifamily buildings more than three stories above grade.

(b) The primary types of buildings built by or for the Federal agencies, to which the energy conservation performance standards will apply, are:

(1) Single-story single-family residences;

(2) Split-level single-family residences;

(3) Two-story single-family residences;

(4) End-unit townhouses;

(5) Middle-unit townhouses;

(6) End-units in multifamily buildings (of three stories above grade or less);

(7) Middle-units in multifamily buildings (of three stories above grade or less);

(8) Single-section mobile homes; and

(9) Multi-section mobile homes.

[53 FR 32545, Aug. 25, 1988, as amended at 71 FR 70284, Dec. 4, 2006]

§ 435.302 Definitions.

(a) *ANSI* means American National Standards Institute.

(b) *ASHRAE Handbook* means American Society of Heating, Refrigerating and Air-Conditioning Engineers, Inc., ASHRAE Handbook, 1985 Fundamentals. Volume, 1–P Edition.

(c) *ASTM* means American Society of Testing and Measurement.

(d) *British thermal unit (Btu)* means approximately the amount of heat required to raise the temperature of one pound of water from 59 °F to 60 °F.

(e) *Building* means any new residential structure:

(1) That includes or will include a heating or cooling system, or both, or a domestic hot water system, and

(2) For which a building design is created after the effective date of this rule.

(f) *Building design* means the development of plans and specifications for human living space.

(g) *Conservation Optimization Standard for Savings in Federal Residences* means the computerized calculation procedure that is used to establish an energy consumption goal for the design of Federal residential buildings.

(h) *COSTSAFR* means the Conservation Optimization Standard for Savings in Federal Residences.

(i) *DOE* means U.S. Department of Energy.

(j) *Domestic hot water (DHW)* means the supply of hot water for purposes other than space conditioning.

(k) *Energy conservation measure (ECM)* means a building material or component whose use will affect the energy consumed for space heating, space cooling, domestic hot water or refrigeration.

(l) *Energy performance standard* means an energy consumption goal or goals to be met without specification of the method, materials, and processes to be employed in achieving that goal or goals, but including statements of the requirements, criteria evaluation methods to be used, and any necessary commentary.

(m) *Federal agency* means any department, agency, corporation, or other entity or instrumentality of the executive branch of the Federal Government, including the United States Postal Service, the Federal National Mortgage Association, and the Federal Home Loan Mortgage Corporation.

(n) *Federal residential building* means any residential building to be constructed by or for the use of any Federal agency in the Continental U.S., Alaska, or Hawaii that is not legally subject to state or local building codes or similar requirements.

(o) *Life cycle cost* means the minimum life cycle cost calculated by using a methodology specified in subpart A of 10 CFR part 436.

(p) *Point system* means the tables that display the effect of the set of energy conservation measures on the design energy consumption and energy costs of a residential building for a particular location, building type and fuel type.

(q) *Practicable optimum life cycle energy cost* means the energy costs of the set of conservation measures that has the minimum life cycle cost to the Federal government incurred during a 25 year period and including the costs of construction, maintenance, operation, and replacement.

(r) *Project* means the group of one or more Federal residential buildings to be built at a specific geographic location that are included by a Federal agency in specifications issued or used by a Federal agency for design or construction of the buildings.

(s) *Prototype* means a fundamental house design based on typical construction assumptions. The nine prototypes in COSTSAFR are: single-section manufactured house, double-section manufactured house, ranch-style house, two-story house, split-level house, mid-unit apartment, end-unit apartment, mid-unit townhouse, end-unit townhouse.

(t) *Residential building* means a new building that is designed to be constructed and developed for residential occupancy.

(u) *Set of conservation options* means the combination of envelope design and

equipment measures that influences the long term energy use in a building designed to maintain a minimum of ventilation level of 0.7 air changes per hour, including the heating and cooling equipment, domestic hot water equipment, glazing, insulation, refrigerators and air infiltration control measures.

(v) *Shading coefficient* means the ratio of the heat gains through windows, with or without integral shading devices, to that occurring through unshaded, ⅛-inch clear glass.

(w) *Total annual coil load* means the energy for space heating and/or cooling with no adjustment for HVAC equipment efficiency.

[56 FR 3772, Jan. 31, 1991]

§ 435.303 Requirements for the design of a Federal residential building.

(a) The head of each Federal agency responsible for the construction of Federal residential buildings shall establish an energy consumption goal for each residential building to be designed or constructed by or for the agency, for which design for construction began before January 3, 2007.

(b) The energy consumption goal for a Federal residential building for which design for construction began before January 3, 2007, shall be a total point score derived by using the microcomputer program and user manual entitled ''Conservation Optimization Standard for Savings in Federal Residences (COSTSAFR),'' unless the head of the Federal agency shall establish more stringent requirements for that agency.

(c) The head of each Federal agency shall adopt such procedures as may be necessary to ensure that the design of a Federal residential building is not less energy conserving than the energy consumption goal established for the building.

[53 FR 32545, Aug. 25, 1988, as amended at 71 FR 70284, Dec. 4, 2006]

§ 435.304 The COSTSAFR Program.

(a) The COSTSAFR Program (Version 3.0) provides a computerized calculation procedure to determine the most effective set of energy conservation measures, selected from among the measures included within the Program that will produce the practicable optimum life cycle cost for a type of residential building in a specific geographic location. The most effective set of energy conservation measures is expressed as a total point score that serves as the energy consumption goal.

(b) The COSTSAFR Program (Version 3.0) also prints out a point system that identifies a wide array of different energy conservation measures indicating how many points various levels of each measure would contribute to reaching the total point score of the energy consumption goal. This enables a Federal agency to use the energy consumption goal and the point system in the design and procurement procedures so that designers and builders can pick and choose among different combinations of energy conservation measures to meet or exceed the total point score required to meet the energy consumption goal.

(c) The COSTSAFR Program (Version 3.0) operates on a micro-computer system that uses the MS DOS operating system and is equipped with an 8087 coprocessor.

(d) The COSTSAFR Program (Version 3.0) may be obtained from:

National Technical Information Service; Department of Commerce; Springfield, Virginia 22161; (202) 487-4600

[53 FR 32545, Aug. 25, 1988, as amended at 56 FR 3772, Jan. 31, 1991]

§ 435.305 Alternative compliance procedure.

(a) If a proposed building design includes unusual or innovative energy conservation measures which are not covered by the COSTSAFR program, the Federal agency shall determine whether that design meets or exceeds the applicable energy consumption goal in compliance with the procedures set forth in this section.

(b) The Federal agency shall determine the estimated discounted energy cost for the COSTSAFR prototype building design, which is the most similar of the COSTSAFR prototypes to the proposed building design, by—

(1) Printing out the COSTSAFR compliance forms for the prototype showing the points attributable to levels of various energy conservation measures;

(2) Calculating the estimated unit energy cost on the compliance forms, on the basis of selecting the optimum levels on the compliance forms or otherwise in the User's Manual for each energy conservation measure; and

(3) Multiplying the estimated unit energy cost by 100.

(c) The Federal agency shall determine the estimated discounted energy cost for the proposed building design by—

(1) Estimating the heating and cooling total annual coil loads of the proposed building design with the DOE 2.1C computer program on the basis of input assumptions including—

(i) Shading coefficients of 0.6 for summer and 0.8 for winter;

(ii) Thermostat setpoints of 78 degrees Fahrenheit for cooling, 70 degrees Fahrenheit for heating (6 am to 12 midnight), and 60 degrees Fahrenheit for Night Setback (12 midnight to 6 am, except for houses with heat pumps);

(iii) The infiltration rate measured in air changes per hour as calculated using appendix B of the COSTSAFR User's Manual;

(iv) Natural venting with a constant air change rate of 10 air changes per hour—

(A) When the outdoor temperature is lower than the indoor temperature, but not above 78 degrees Fahrenheit; and

(B) When the enthalpy of the outdoor air is lower than the indoor air.

(v) Internal gains in accordance with the following table for a house with 1540 square feet of floor area, adjusted by 0.35 Btu/ft^2/hr to account for changes in lighting as the floor area varies from 1540 square feet—

TABLE 1—INTERNAL GAIN SCHEDULE (BTU)

Hour of day	Sensible	Latent
1	1139	247
2	1139	247
3	1139	247
4	1139	247
5	1139	247
6	1903	412
7	2391	518
8	4782	1036
9	2790	604
10	1707	370
11	1707	370
12	2277	493
13	1707	370
14	1424	308
15	1480	321
16	1480	321
17	2164	469
18	2334	506
19	2505	543
20	3928	851
21	3928	851
22	4101	888
23	4101	888
24	3701	802

(vi) Thermal transmittances for building envelope materials measured in accordance with applicable ASTM procedures or from the ASHRAE Handbook;

(vii) Proposed heating and cooling equipment types included in COSTSAFR or having a certified seasonal efficiency rating;

(viii) Weather Year for Energy Calculations (WYEC) weather year data (WYEC data are on tapes available from ASHRAE, 1791 Tullie Circle, N.E., Atlanta, Georgia 30329), or if unavailable, Test Reference Year (TRY) weather data (obtainable from National Climatic Data Center, 1983 *Test Reference Year*, Tape Reference Manual, TD–9706, Asheville, North Carolina) relevant to project location.

(2) Estimating the discounted energy cost for the heating and cooling energy loads, respectively, according to the following equation—

$$\text{Discounted Energy Cost} = \frac{\text{Total Annual Coil Load} \times \text{Fuel Cost} \times \text{UPW*}}{\text{Equipment Efficiency}}$$

Where:

Total Annual Coil Load=the total heating or cooling annual coil load calculated under paragraph (c)(1);

Fuel Cost=the heating or cooling fuel cost calculated in accordance with sections 3.3.D and 3.3.E of the User's Manual;

UPW*=the uniform present worth discount factor; selected from the last page of the compliance forms.

Equipment Efficiency=the test seasonal efficiency rating of the heating and cooling equipment only (i.e., not including duct or distribution system losses).

(3) Estimating the discounted energy cost for water heating and refrigerator/freezer energy consumption—

(i) For equipment types covered by the COSTSAFR compliance forms, by multiplying the estimated unit energy cost by 100; or

(ii) For equipment types not covered by COSTSAFR—

$$\text{Discounted Energy Cost} = \frac{\text{Annual Energy Consumption} \times \text{Fuel Cost} \times \text{UPW*}}{\text{Energy Factor}}$$

Where:

Fuel Cost and UPW* are as defined in paragraph (c)(2) of this section; Annual Energy Consumption is as calculated in 10 CFR 430.22; and Energy Factor is the measure of energy efficiency as calculated under 10 CFR 430.22

(iii) [Reserved]

(4) Adding together the discounted energy costs calculated under paragraphs (c)(2) and (c)(3) of this section;

(d) If the discounted energy cost of the proposed building design calculated under paragraph (c)(4) of this section is equal to or less than the discounted energy cost of the COSTSAFR prototype building design calculated under paragraph (b) of this section, then the proposed building design is in compliance with the applicable energy consumption goal under this part.

[56 FR 3772, Jan. 31, 1991]

§ 435.306 Selecting a life cycle effective proposed building design.

In selecting between or among proposed building designs which comply with the applicable energy consumption goal under this part, each Federal agency shall select the design which, in comparison to the applicable COSTSAFR prototype, has the highest Net Savings or lowest total life cycle costs calculated in compliance with subpart A of 10 CFR part 436.

[56 FR 3773, Jan. 31, 1991]

PART 436—FEDERAL ENERGY MANAGEMENT AND PLANNING PROGRAMS

Sec.
436.1 Scope.
436.2 General objectives.

Subpart A—Methodology and Procedures for Life Cycle Cost Analyses

436.10 Purpose.
436.11 Definitions.
436.12 Life cycle cost methodology.
436.13 Presuming cost-effectiveness results.
436.14 Methodological assumptions.
436.15 Formatting cost data.
436.16 Establishing non-fuel and non-water cost categories.
436.17 Establishing energy or water cost data.
436.18 Measuring cost-effectiveness.
436.19 Life cycle costs.
436.20 Net savings.
436.21 Savings-to-investment ratio.
436.22 Adjusted internal rate of return.
436.23 Estimated simple payback time.
436.24 Uncertainty analysis.

Subpart B—Methods and Procedures for Energy Savings Performance Contracting

436.30 Purpose and scope.
436.31 Definitions.
436.32 Qualified contractors lists.
436.33 Procedures and methods for contractor selection.
436.34 Multiyear contracts.
436.35 Standard terms and conditions.
436.36 Conditions of payment.
436.37 Annual energy audits.
436.38 Terminating contracts.

Subpart C—Agency Procurement of Energy Efficient Products

436.40 Purpose and scope.

436.41 Definitions.
436.42 Evaluation of Life-Cycle Cost Effectiveness
436.43 Procurement Planning.

Subparts D–E [Reserved]

Subpart F—Guidelines for General Operations Plans

436.100 Purpose and scope.
436.101 Definitions.
436.102 General operations plan format and content.
436.103 Program goal setting.
436.104 Energy conservation measures and standards.
436.105 Emergency conservation plan.
436.106 Reporting requirements.
436.107 Review of plan.
436.108 Waivers.

APPENDIX A TO PART 436—ENERGY CONSERVATION STANDARDS FOR GENERAL OPERATIONS [RESERVED]
APPENDIX B TO PART 436—GOAL SETTING METHODOLOGY
APPENDIX C TO PART 436—GENERAL OPERATIONS ENERGY CONSERVATION MEASURES
APPENDIX D TO PART 436—ENERGY PROGRAM CONSERVATION ELEMENTS

AUTHORITY: 42 U.S.C. 7101 *et seq.;* 42 U.S.C. 8258; 42 U.S.C. 8259b.

SOURCE: 44 FR 60669, Oct. 19, 1979, unless otherwise noted.

§ 436.1 Scope.

This part sets forth the rules for Federal energy management and planning programs to reduce Federal energy consumption and to promote life cycle cost effective investments in building energy systems, building water systems and energy and water conservation measures for Federal buildings.

[61 FR 32649, June 25, 1996]

§ 436.2 General objectives.

The objectives of Federal energy management and planning programs are:

(a) To apply energy conservation measures to, and improve the design for construction of Federal buildings such that the energy consumption per gross square foot of Federal buildings in use during the fiscal year 1995 is at least 10 percent less than the energy consumption per gross square foot in 1985;

(b) To promote the methodology and procedures for conducting life cycle cost analyses of proposed investments in building energy systems, building water systems and energy and water conservation measures;

(c) To promote the use of energy savings performance contracts by Federal agencies for implementation of privately financed investment in building and facility energy conservation measures for existing Federally owned buildings; and

(d) To promote efficient use of energy in all agency operations through general operations plans.

[55 FR 48220, Nov. 20, 1990, as amended at 60 FR 18334, Apr. 10, 1995; 61 FR 32649, June 25, 1996]

Subpart A—Methodology and Procedures for Life Cycle Cost Analyses

SOURCE: 55 FR 48220, Nov. 20, 1990, unless otherwise noted.

§ 436.10 Purpose.

This subpart establishes a methodology and procedures for estimating and comparing the life cycle costs of Federal buildings, for determining the life cycle cost effectiveness of energy conservation measures and water conservation measures, and for rank ordering life cycle cost effective measures in order to design a new Federal building or to retrofit an existing Federal building. It also establishes the method by which efficiency shall be considered when entering into or renewing leases of Federal building space.

[61 FR 32649, June 25, 1996]

§ 436.11 Definitions.

As used in this subpart—

Base Year means the fiscal year in which a life cycle cost analysis is conducted.

Building energy system means an energy conservation measure or any portion of the structure of a building or any mechanical, electrical, or other functional system supporting the building, the nature or selection of which for a new building influences significantly the cost of energy consumed.

Building water system means a water conservation measure or any portion of the structure of a building or any mechanical, electrical, or other functional

system supporting the building, the nature or selection of which for a new building influences significantly the cost of water consumed.

Component price means any variable sub-element of the total charge for a fuel or energy or water, including but not limited to such charges as ''demand charges,'' ''off-peak charges'' and ''seasonal charges.''

Demand charge means that portion of the charge for electric service based upon the plant and equipment costs associated with supplying the electricity consumed.

DOE means Department of Energy.

Energy conservation measures means measures that are applied to an existing Federal building that improve energy efficiency and are life cycle cost effective and that involve energy conservation, cogeneration facilities, renewable energy sources, improvements in operation and maintenance efficiencies, or retrofit activities.

Federal agency means ''agency'' as defined by 5 U.S.C. 551(1).

Federal building means an energy or water conservation measure or any building, structure, or facility, or part thereof, including the associated energy and water consuming support systems, which is constructed, renovated, leased, or purchased in whole or in part for use by the Federal government. This term also means a collection of such buildings, structures, or facilities and the energy and water consuming support systems for such collection.

Investment costs means the initial costs of design, engineering, purchase, construction, and installation exclusive of sunk costs.

Life cycle cost means the total cost of owning, operating and maintaining a building over its useful life (including its fuel and water, energy, labor, and replacement components), determined on the basis of a systematic evaluation and comparison of alternative building systems, except that in the case of leased buildings, the life cycle cost shall be calculated over the effective remaining term of the lease.

Non-fuel operation and maintenance costs means material and labor cost for routine upkeep, repair and operation exclusive of energy cost.

Non-recurring costs means costs that are not uniformly incurred annually over the study period.

Non-water operation and maintenance costs mean material and labor cost for routine upkeep, repair and operation exclusive of water cost.

Recurring costs means future costs that are incurred uniformly and annually over the study period.

Replacement costs mean future cost to replace a building energy system or building water system, an energy or water conservation measure, or any component thereof.

Retrofit means installation of a building energy system or building water system alternative in an existing Federal building.

Salvage value means the value of any building energy system or building water system removed or replaced during the study period, or recovered through resale or remaining at the end of the study period.

Study period means the time period covered by a life cycle cost analysis.

Sunk costs means costs incurred prior to the time at which the life cycle cost analysis occurs.

Time-of-day rate means the charge for service during periods of the day based on the cost of supplying services during various times of the day.

Water conservation measures mean measures that are applied to an existing Federal building that improve the efficiency of water use, reduce the amount of water for sewage disposal and are life cycle cost effective and that involve water conservation, improvements in operation and maintenance efficiencies, or retrofit activities.

[55 FR 48220, Nov. 20, 1990, as amended at 61 FR 32649, June 25, 1996]

§ 436.12 Life cycle cost methodology.

The life cycle cost methodology for this part is a systematic analysis of relevant costs, excluding sunk costs, over a study period, relating initial costs to future costs by the technique of discounting future costs to present values.

§ 436.13 Presuming cost-effectiveness results.

(a) If the investment and other costs for an energy or water conservation measure considered for retrofit to an existing Federal building or a building energy system or building water system considered for incorporation into a new building design are insignificant, a Federal agency may presume that such a system is life cycle cost-effective without further analysis.

(b) A Federal agency may presume that an investment in an energy or water conservation measure retrofit to an existing Federal building is not life cycle cost-effective for Federal investment if the Federal building is—

(1) Occupied under a short-term lease with a remaining term of one year or less, and without a renewal option or with a renewal option which is not likely to be exercised;

(2) Occupied under a lease which includes the cost of utilities in the rent and does not provide a pass-through of energy or water savings to the government; or

(3) Scheduled to be demolished or retired from service within one year or less.

[55 FR 48220, Nov. 20, 1990, as amended at 61 FR 32650, June 25, 1996]

§ 436.14 Methodological assumptions.

(a) Each Federal Agency shall discount to present values the future cash flows established in either current or constant dollars consistent with the nominal or real discount rate, and related tables, published in the annual supplement to the Life Cycle Costing Manual for the Federal Energy Management Program (NIST 85–3273) and determined annually by DOE as follows—

(1) The nominal discount rate shall be a 12 month average of the composite yields of all outstanding U.S. Treasury bonds neither due nor callable in less than ten years, as most recently reported by the Federal Reserve Board; and

(2) Subject to a ceiling of 10 percent and a floor of three percent the real discount rate shall be a 12 month average of the composite yields of all outstanding U.S. Treasury bonds neither due nor callable in less than ten years, as most recently reported by the Federal Reserve Board, adjusted to exclude estimated increases in the general level of prices consistent with projections of inflation in the most recent Economic Report of the President's Council of Economic Advisors.

(b) Each Federal agency shall assume that energy prices will change at rates projected by DOE's Energy Information Administration and published by NIST annually no later than the beginning of the fiscal year in the Annual Supplement to the Life Cycle Costing Manual for the Federal Energy Management Program, in tables consistent with the discount rate determined by DOE under paragraph (a) of this section, except that—

(1) If the Federal agency is using component prices under § 436.14(c), that agency may use corresponding component escalation rates provided by the energy or water supplier.

(2) For Federal buildings in foreign countries, the Federal agency may use a ''reasonable'' escalation rate.

(c) Each Federal agency shall assume that the price of energy or water in the base year is the actual price charged for energy or water delivered to the Federal building and may use actual component prices as provided by the energy or water supplier.

(d) Each Federal agency shall assume that the appropriate study period is as follows:

(1) For evaluating and ranking alternative retrofits for an existing Federal building, the study period is the expected life of the retrofit, or 25 years from the beginning of beneficial use, whichever is shorter.

(2) For determining the life cycle costs or net savings of mutually exclusive alternatives for a given building energy system or building water system (e.g., alternative designs for a particular system or size of a new or retrofit building energy system or building water system), a uniform study period for all alternatives shall be assumed which is equal to—

(i) The estimated life of the mutually exclusive alternative having the longest life, not to exceed 25 years from the

beginning of beneficial use with appropriate replacement and salvage values for each of the other alternatives; or

(ii) The lowest common multiple of the expected lives of the alternative, not to exceed 25 from the beginning of beneficial use with appropriate replacement and salvage values for each alternative.

(3) For evaluating alternative designs for a new Federal building, the study period extends from the base year through the expected life of the building or 25 years from the beginning of beneficial use, whichever is shorter.

(e) Each Federal agency shall assume that the expected life of any building energy system or building water system is the period of service without major renewal or overhaul, as estimated by a qualified engineer or architect, as appropriate, or any other reliable source except that the period of service of a building energy or water system shall not be deemed to exceed the expected life of the owned building, or the effective remaining term of the leased building (taking into account renewal options likely to be exercised).

(f) Each Federal agency may assume that investment costs are a lump sum occurring at the beginning of the base year, or may discount future investment costs to present value using the appropriate present worth factors under paragraph (a) of this section.

(g) Each Federal agency may assume that energy or water costs and non-fuel or non-water operation and maintenance costs begin to accrue at the beginning of the base year or when actually projected to occur.

(h) Each Federal agency may assume that costs occur in a lump sum at any time within the year in which they are incurred.

(i) This section shall not apply to calculations of estimated simple payback time under § 436.22 of this part.

[55 FR 48220, Nov. 20, 1990, as amended at 61 FR 32650, June 25, 1996]

§ 436.15 Formatting cost data.

In establishing cost data under §§ 436.16 and 436.17 and measuring cost effectiveness by the modes of analysis described by § 436.19 through § 436.22, a format for accomplishing the analysis which includes all required input data and assumptions shall be used. Subject to § 436.18(b), Federal agencies are encouraged to use worksheets or computer software referenced in the Life Cycle Cost Manual for the Federal Energy Management Program.

§ 436.16 Establishing non-fuel and non-water cost categories.

(a) The relevant non-fuel cost categories are—

(1) Investment costs;

(2) Non-fuel operation and maintenance cost;

(3) Replacement cost; and

(4) Salvage value.

(b) The relevant non-water cost categories are—

(1) Investment costs;

(2) Non-water operation and maintenance cost;

(3) Replacement cost; and

(4) Salvage value.

(c) The present value of recurring costs is the product of the base year value of recurring costs as multiplied by the appropriate uniform present worth factor under § 436.14, or as calculated by computer software indicated in § 436.18(b) and used with the official discount rate and escalation rate assumptions under § 436.14. When recurring costs begin to accrue at a later time, subtract the present value of recurring costs over the delay, calculated using the appropriate uniform present worth factor for the period of the delay, from the present value of recurring costs over the study period or, if using computer software, indicate a delayed beneficial occupancy date.

(d) The present value of non-recurring cost under § 436.16(a) is the product of the non-recurring costs as multiplied by appropriate single present worth factors under § 436.14 for the respective years in which the costs are expected to be incurred, or as calculated by computer software provided or approved by DOE and used with the official discount rate and escalation rate assumptions under § 436.14.

[55 FR 48220, Nov. 20, 1990, as amended at 61 FR 32650, June 25, 1996]

§ 436.17 Establishing energy or water cost data.

(a) Each Federal agency shall establish energy costs in the base year by

multiplying the total units of energy used in the base year by the price per unit of energy in the base year as determined in accordance with § 436.14(c).

(b) When energy costs begin to accrue in the base year, the present value of energy costs over the study period is the product of energy costs in the base year as established under § 436.17(a), multiplied by the appropriate modified uniform present worth factor adjusted for energy price escalation for the applicable region, sector, fuel type, and study period consistent with § 436.14, or as calculated by computer software provided or approved by DOE and used with the official discount rate and escalation rate assumptions under § 436.14. When energy costs begin to accrue at a later time, subtract the present value of energy costs over the delay, calculated using the adjusted, modified uniform present worth factor for the period of delay, from the present value of energy costs over the study period or, if using computer software, indicate a delayed beneficial occupancy date.

(c) Each Federal agency shall establish water costs in the base year by multiplying the total units of water used in the base year by the price per unit of water in the base year as determined in accordance with § 436.14(c).

(d) When water costs begin to accrue in the base year, the present value of water costs over the study period is the product of water costs in the base year as established under § 436.17(a), or as calculated by computer software provided or approved by DOE and used with the official discount rate and assumptions under § 436.14. When water costs begin to accrue at a later time, subtract the present value of water costs over the delay, calculated using the uniform present worth factor for the period of delay, from the present value of water costs over the study period or, if using computer software, indicate a delayed beneficial occupancy date.

[55 FR 48220, Nov. 20, 1990, as amended at 61 FR 32650, June 25, 1996]

§ 436.18 Measuring cost-effectiveness.

(a) In accordance with this section, each Federal agency shall measure cost-effectiveness by combining cost data established under §§ 436.16 and 436.17 in the appropriate mode of analysis as described in § 436.19 through § 436.22.

(b) Federal agencies performing LCC analysis on computers shall use either the Federal Buildings Life Cycle Costing (FBLCC) software provided by DOE or software consistent with this subpart.

(c) Replacement of a building energy or water system with an energy or water conservation measure by retrofit to an existing Federal building or by substitution in the design for a new Federal building shall be deemed cost-effective if—

(1) Life cycle costs, as described by § 436.19, are estimated to be lower; or

(2) Net savings, as described by § 436.20, are estimated to be positive; or

(3) The savings-to-investment ratio, as described by § 436.21, is estimated to be greater than one; or

(4) The adjusted internal rate of return, as described by § 436.22, is estimated to be greater than the discount rate as set by DOE.

(d) As a rough measure, each Federal agency may determine estimated simple payback time under § 436.23, which indicates whether a retrofit is likely to be cost effective under one of the four calculation methods referenced in § 436.18(c). An energy or water conservation measure alternative is likely to be cost-effective if estimated payback time is significantly less than the useful life of that system, and of the Federal building in which it is to be installed.

(e) Mutually exclusive alternatives for a given building energy or water system, considered in determining such matters as the optimal size of a solar energy system, the optimal thickness of insulation, or the best choice of double-glazing or triple-glazing for windows, shall be compared and evaluated on the basis of life cycle costs or net savings over equivalent study periods. The alternative which is estimated to result in the lowest life cycle costs or the highest net savings shall be deemed the most cost-effective because it tends to minimize the life cycle cost of Federal building.

(f) When available appropriations will not permit all cost-effective energy or water conservation measures to be undertaken, they shall be ranked in descending order of their savings-to-investment ratios, or their adjusted internal rate of return, to establish priority. If available appropriations cannot be fully exhausted for a fiscal year by taking all budgeted energy or water conservation measures according to their rank, the set of energy or water conservation measures that will maximize net savings for available appropriations should be selected.

(g) Alternative building designs for new Federal buildings shall be evaluated on the basis of life cycle costs. The alternative design which results in the lowest life cycle costs for a given new building shall be deemed the most cost-effective.

[55 FR 48220, Nov. 20, 1990, as amended at 61 FR 32650, June 25, 1996]

§ 436.19 Life cycle costs.

Life cycle costs are the sum of the present values of—

(a) Investment costs, less salvage values at the end of the study period;

(b) Non-fuel operation and maintenance costs:

(c) Replacement costs less salvage costs of replaced building systems; and

(d) Energy and/or water costs.

[55 FR 48220, Nov. 20, 1990, as amended at 61 FR 32651, June 25, 1996]

§ 436.20 Net savings.

For a retrofit project, net savings may be found by subtracting life cycle costs based on the proposed project from life cycle costs based on not having it. For a new building design, net savings is the difference between the life cycle costs of an alternative design and the life cycle costs of the basic design.

§ 436.21 Savings-to-investment ratio.

The savings-to-investment ratio is the ratio of the present value savings to the present value costs of an energy or water conservation measure. The numerator of the ratio is the present value of net savings in energy or water and non-fuel or non-water operation and maintenance costs attributable to the proposed energy or water conservation measure. The denominator of the ratio is the present value of the net increase in investment and replacement costs less salvage value attributable to the proposed energy or water conservation measure.

[61 FR 32651, June 25, 1996]

§ 436.22 Adjusted internal rate of return.

The adjusted internal rate of return is the overall rate of return on an energy or water conservation measure. It is calculated by subtracting 1 from the nth root of the ratio of the terminal value of savings to the present value of costs, where n is the number of years in the study period. The numerator of the ratio is calculated by using the discount rate to compound forward to the end of the study period the yearly net savings in energy or water and non-fuel or non-water operation and maintenance costs attributable to the proposed energy or water conservation measure. The denominator of the ratio is the present value of the net increase in investment and replacement costs less salvage value attributable to the proposed energy or water conservation measure.

[61 FR 32651, June 25, 1996]

§ 436.23 Estimated simple payback time.

The estimated simple payback time is the number of years required for the cumulative value of energy or water cost savings less future non-fuel or non-water costs to equal the investment costs of the building energy or water system, without consideration of discount rates.

[61 FR 32651, June 25, 1996]

§ 436.24 Uncertainty analyses.

If particular items of cost data or timing of cash flows are uncertain and are not fixed under § 436.14, Federal agencies may examine the impact of uncertainty on the calculation of life cycle cost effectiveness or the assignment of rank order by conducting additional analyses using any standard engineering economics method such as sensitivity and probabilistic analysis. If additional analysis casts substantial

doubt on the life cycle cost analysis results, a Federal agency should consider obtaining more reliable data or eliminating the building energy or water system alternative.

[55 FR 48220, Nov. 20, 1990, as amended at 61 FR 32651, June 25, 1996]

Subpart B—Methods and Procedures for Energy Savings Performance Contracting

SOURCE: 60 FR 18334, Apr. 10, 1995, unless otherwise noted.

§ 436.30 Purpose and scope.

(a) *General*. This subpart provides procedures and methods which apply to Federal agencies with regard to the award and administration of energy savings performance contracts awarded on or before September 30, 2003. This subpart applies in addition to the Federal Acquisition Regulation at Title 48 of the CFR and related Federal agency regulations. The provisions of this subpart are controlling with regard to energy savings performance contracts notwithstanding any conflicting provisions of the Federal Acquisition Regulation and related Federal agency regulations.

(b) *Utility incentive programs*. Nothing in this subpart shall preclude a Federal agency from—

(1) Participating in programs to increase energy efficiency, conserve water, or manage electricity demand conducted by gas, water, or electric utilities and generally available to customers of such utilities;

(2) Accepting financial incentives, goods, or services generally available from any such utility to increase energy efficiency or to conserve water or manage electricity demand; or

(3) Entering into negotiations with electric, water, and gas utilities to design cost-effective demand management and conservation incentive programs to address the unique needs of each Federal agency.

(c) *Promoting competition*. To the extent allowed by law, Federal agencies should encourage utilities to select contractors for the conduct of utility incentive programs in a competitive manner to the maximum extent practicable.

(d) *Interpretations*. The permissive provisions of this subpart shall be liberally construed to effectuate the objectives of Title VIII of the National Energy Conservation Policy Act, 42 U.S.C. 8287–8287c.

[60 FR 18334, Apr. 10, 1995, as amended at 60 FR 19343, Apr. 18, 1995; 65 FR 39786, June 28, 2000]

§ 436.31 Definitions.

As used in this subpart—

Act means Title VIII of the National Energy Conservation Policy Act.

Annual energy audit means a procedure including, but not limited to, verification of the achievement of energy cost savings and energy unit savings guaranteed resulting from implementation of energy conservation measures and determination of whether an adjustment to the energy baseline is justified by conditions beyond the contractor's control.

Building means any closed structure primarily intended for human occupancy in which energy is consumed, produced, or distributed.

Detailed energy survey means a procedure which may include, but is not limited to, a detailed analysis of energy cost savings and energy unit savings potential, building conditions, energy consuming equipment, and hours of use or occupancy for the purpose of confirming or revising technical and price proposals based on the preliminary energy survey.

DOE means Department of Energy.

Energy baseline means the amount of energy that would be consumed annually without implementation of energy conservation measures based on historical metered data, engineering calculations, submetering of buildings or energy consuming systems, building load simulation models, statistical regression analysis, or some combination of these methods.

Energy conservation measures means measures that are applied to an existing Federally owned building or facility that improves energy efficiency, are life-cycle cost-effective under subpart A of this part, and involve energy conservation, cogeneration facilities,

renewable energy sources, improvements in operation and maintenance efficiencies, or retrofit activities.

Energy cost savings means a reduction in the cost of energy and related operation and maintenance expenses, from a base cost established through a methodology set forth in an energy savings performance contract, utilized in an existing federally owned building or buildings or other federally owned facilities as a result of—

(1) The lease or purchase of operating equipment, improvements, altered operation and maintenance, or technical services; or

(2) The increased efficient use of existing energy sources by cogeneration or heat recovery, excluding any cogeneration process for other than a federally owned building or buildings or other federally owned facilities.

Energy savings performance contract means a contract which provides for the performance of services for the design, acquisition, installation, testing, operation, and, where appropriate, maintenance and repair of an identified energy conservation measure or series of measures at one or more locations.

Energy unit savings means the determination, in electrical or thermal units (e.g., kilowatt hour (kwh), kilowatt (kw), or British thermal units (Btu)), of the reduction in energy use or demand by comparing consumption or demand, after completion of contractor-installed energy conservation measures, to an energy baseline established in the contract.

Facility means any structure not primarily intended for human occupancy, or any contiguous group of structures and related systems, either of which produces, distributes, or consumes energy.

Federal agency has the meaning given such term in section 551(1) of Title 5, United States Code.

Preliminary energy survey means a procedure which may include, but is not limited to, an evaluation of energy cost savings and energy unit savings potential, building conditions, energy consuming equipment, and hours of use or occupancy, for the purpose of developing technical and price proposals prior to selection.

Secretary means the Secretary of Energy.

§ 436.32 Qualified contractors lists.

(a) DOE shall prepare a list, to be updated annually, or more often as necessary, of firms qualified to provide energy cost savings performance services and grouped by technology. The list shall be prepared from statements of qualifications by or about firms engaged in providing energy savings performance contract services on questionnaires obtained from DOE. Such statements shall, at a minimum, include prior experience and capabilities of firms to perform the proposed energy cost savings services by technology and financial and performance information. DOE shall issue a notice annually, for publication in the Commerce Business Daily, inviting submission of new statements of qualifications and requiring listed firms to update their statements of qualifications for changes in the information previously provided.

(b) On the basis of statements of qualifications received under paragraph (a) of this section and any other relevant information, DOE shall select a firm for inclusion on the qualified list if—

(1) It has provided energy savings performance contract services or services that save energy or reduce utility costs for not less than two clients, and the firm possesses the appropriate project experience to successfully implement the technologies which it proposes to provide;

(2) Previous project clients provide ratings which are ''fair'' or better;

(3) The firm or any principal of the firm has neither been insolvent nor declared bankruptcy within the last five years;

(4) The firm or any principal of the firm is not on the list of parties excluded from procurement programs under 48 CFR part 9, subpart 9.4; and

(5) There is no other adverse information which warrants the conclusion that the firm is not qualified to perform energy savings performance contracts.

(c) DOE may remove a firm from DOE's list of qualified contractors

after notice and an opportunity for comment if—

(1) There is a failure to update its statement of qualifications;

(2) There is credible information warranting disqualification; or

(3) There is other good cause.

(d) A Federal agency shall use DOE's list unless it elects to develop its own list of qualified firms consistent with the procedures in paragraphs (a) and (b) of this section.

(e) A firm not designated by DOE or a Federal agency pursuant to the procedures in paragraphs (a) and (b) of this section as qualified to provide energy cost savings performance services shall receive a written decision and may request a debriefing.

(f) Any firm receiving an adverse final decision under this section shall apply to the Board of Contract Appeals of the General Services Administration in order to exhaust administrative remedies.

§ 436.33 Procedures and methods for contractor selection.

(a) *Competitive selection*. Competitive selections based on solicitation of firms are subject to the following procedures—

(1) With respect to a particular proposed energy cost savings performance project, Federal agencies shall publish a Commerce Business Daily notice which synopsizes the proposed contract action.

(2) Each competitive solicitation—

(i) Shall request technical and price proposals and the text of any third-party financing agreement from interested firms;

(ii) Shall consider DOE model solicitations and should use them to the maximum extent practicable;

(iii) May provide for a two-step selection process which allows Federal agencies to make an initial selection based, in part, on proposals containing estimated energy cost savings and energy unit savings, with contract award conditioned on confirmation through a detailed energy survey that the guaranteed energy cost savings are within a certain percentage (specified in the solicitation) of the estimated amount; and

(iv) May state that if the Federal agency requires a detailed energy survey which identifies life cycle cost effective energy conservation measures not in the initial proposal, the contract may include such measures.

(3) Based on its evaluation of the technical and price proposals submitted, any applicable financing agreement (including lease-acquisitions, if any), statements of qualifications submitted under § 436.32 of this subpart, and any other information determines to be relevant, the Federal agency may select a firm on a qualified list to conduct the project.

(4) If a proposed energy cost savings project involves a large facility with too many contiguously related buildings and other structures at one site for proposing firms to assume the costs of a preliminary energy survey of all such structures, the Federal agency—

(i) May request technical and price proposals for a representative sample of buildings and other structures and may select a firm to conduct the proposed project; and

(ii) After selection of a firm, but prior to award of an energy savings performance contract, may request the selected firm to submit technical and price proposals for all or some of the remaining buildings and other structures at the site and may include in the award for all or some of the remaining buildings and other structures.

(5) After selection under paragraph (a)(3) or (a)(4) of this section, but prior to award, a Federal agency may require the selectee to conduct a detailed energy survey to confirm that guaranteed energy cost savings are within a certain percentage (specified in the solicitation) of estimated energy cost savings in the selectee's proposal. If the detailed energy survey does not confirm that guaranteed energy savings are within the fixed percentage of estimated savings, the Federal agency may select another firm from those within the competitive range.

(b) *Unsolicited proposals*. Federal agencies may—

(1) Consider unsolicited energy savings performance contract proposals from firms on a qualified contractor list under this subpart which include

technical and price proposals and the text of any financing agreement (including a lease-acquisition) without regard to the requirements of 48 CFR 15.602 and 15.602–2(a)(1); 48 CFR 15.603; and 48 CFR 15.607(a), (a)(2), (a)(3), (a)(4) and (a)(5).

(2) Reject an unsolicited proposal that is too narrow because it does not address the potential for significant energy conservation measures from other than those measures in the proposal.

(3) After requiring a detailed energy survey, if appropriate, and determining that technical and price proposals are adequate, award a contract to a firm on a qualified contractor list under this subpart on the basis of an unsolicited proposal, provided that the Federal agency complies with the following procedures—

(i) An award may not be made to the firm submitting the unsolicited proposal unless the Federal agency first publishes a notice in the Commerce Business Daily acknowledging receipt of the proposal and inviting other firms on the qualified list to submit competing proposals.

(ii) Except for unsolicited proposals submitted in response to a published general statement of agency needs, no award based on such an unsolicited proposal may be made in instances in which the Federal agency is planning the acquisition of an energy conservation measure through an energy savings performance contract.

(c) *Certified cost or pricing data*. (1) Energy savings performance contracts under this part are firm fixed-price contracts.

(2) Pursuant to the authority provided under section 304A(b)(1)(B) of the Federal Property and Administrative Services Act of 1049, the heads of procuring activities shall waive the requirement for submission of certified cost or pricing data. However, this does not exempt offerors from submitting information (including pricing information) required by the Federal agency to ensure the impartial and comprehensive evaluation of proposals.

[60 FR 18334, Apr. 10, 1995, as amended at 65 FR 39786, June 28, 2000]

§ 436.34 Multiyear contracts.

(a) Subject to paragraph (b) of this section, Federal agencies may enter into a multiyear energy savings performance contract for a period not to exceed 25 years, as authorized by 42 U.S.C. 8287, without funding of cancellation charges, if:

(1) The multiyear energy savings performance contract was awarded in a competitive manner using the procedures and methods established by this subpart;

(2) Funds are available and adequate for payment of the scheduled energy cost for the first fiscal year of the multiyear energy savings performance contract;

(3) Thirty days before the award of any multiyear energy savings performance contract that contains a clause setting forth a cancellation ceiling in excess of $750,000, the head of the awarding Federal agency gives written notification of the proposed contract and the proposed cancellation ceiling for the contract to the appropriate authorizing and appropriating committees of the Congress; and

(4) Except as otherwise provided in this section, the multiyear energy savings performance contract is subject to 48 CFR part 17, subpart 17.1, including the requirement that the contracting officer establish a cancellation ceiling.

(b) Neither this subpart nor any provision of the Act requires, prior to contract award or as a condition of a contract award, that a Federal agency have appropriated funds available and adequate to pay for the total costs of an energy savings performance contract for the term of such contract.

§ 436.35 Standard terms and conditions.

(a) *Mandatory requirements*. In addition to contractual provisions otherwise required by the Act or this subpart, any energy savings performance contract shall contain clauses—

(1) Authorizing modification, replacement, or changes of equipment, at no cost to the Federal agency, with the prior approval of the contracting officer who shall consider the expected level of performance after such modification, replacement or change;

(2) Providing for the disposition of title to systems and equipment;

(3) Requiring prior approval by the contracting officer of any financing agreements (including lease-acquisitions) and amendments to such an agreement entered into after contract award for the purpose of financing the acquisition of energy conservation measures;

(4) Providing for an annual energy audit and identifying who shall conduct such an audit, consistent with § 436.37 of this subpart; and

(5) Providing for a guarantee of energy cost savings to the Federal agency, and establishing payment schedules reflecting such guarantee.

(b) *Third party financing*. If there is third party financing, then an energy savings performance contract may contain a clause:

(1) Permitting the financing source to perfect a security interest in the installed energy conservation measures, subject to and subordinate to the rights of the Federal agency; and

(2) Protecting the interests of a Federal agency and a financing source, by authorizing a contracting officer in appropriate circumstances to require a contractor who defaults on an energy savings performance contract or who does not cure the failure to make timely payments, to assign to the financing source, if willing and able, the contractor's rights and responsibilities under an energy savings performance contract;

§ 436.36 Conditions of payment.

(a) Any amount paid by a Federal agency pursuant to any energy savings performance contract entered into under this subpart may be paid only from funds appropriated or otherwise made available to the agency for the payment of energy expenses and related operation and maintenance expenses which would have been incurred without an energy savings performance contract. The amount the agency would have paid is equal to:

(1) The energy baseline under the energy savings performance contract (adjusted if appropriate under § 436.37), multiplied by the unit energy cost; and

(2) Any related operations and maintenance cost prior to implementation of energy conservation measures, adjusted for increases in labor and material price indices.

(b) Federal agencies may incur obligations pursuant to energy savings performance contracts to finance energy conservation measures provided guaranteed energy cost savings exceed the contractor's debt service requirements.

§ 436.37 Annual energy audits.

(a) After contractor implementation of energy conservation measures and annually thereafter during the contract term, an annual energy audit shall be conducted by the Federal agency or the contractor as determined by the contract. The annual energy audit shall verify the achievement of annual energy cost savings performance guarantees provided by the contractor.

(b) The energy baseline is subject to adjustment due to changes beyond the contractor's control, such as—

(1) Physical changes to building;

(2) Hours of use or occupancy;

(3) Area of conditioned space;

(4) Addition or removal of energy consuming equipment or systems;

(5) Energy consuming equipment operating conditions;

(6) Weather (i.e., cooling and heating degree days); and

(7) Utility rates.

(c) In the solicitation or in the contract, Federal agencies shall specify requirements for annual energy audits, the energy baseline, and baseline adjustment procedures.

§ 436.38 Terminating contracts.

(a) Except as otherwise provided by this subpart, termination of energy savings performance contracts shall be subject to the termination procedures of the Federal Acquisition Regulation in 48 CFR part 49.

(b) In the event an energy savings performance contract is terminated for the convenience of a Federal agency, the termination liability of the Federal agency shall not exceed the cancellation ceiling set forth in the contract, for the year in which the contract is terminated.

Subpart C—Agency Procurement of Energy Efficient Products

SOURCE: 74 FR 10835, Mar. 13, 2009, unless otherwise noted.

§ 436.40 Purpose and scope.

This subpart provides guidance to promote the procurement of energy efficient products by Federal agencies and promote procurement practices which facilitate the procurement of energy efficient products, consistent with the requirements in section 553 of the National Energy Conservation Policy Act. (42 U.S.C. 8259b)

§ 436.41 Definitions.

Agency means each authority of the Government of the United States, whether or not it is within or subject to review by another agency, but does not include—

(1) The Congress, and agencies thereof;

(2) The courts of the United States;

(3) The governments of the territories or possessions of the United States; or

(4) The government of the District of Columbia.

Covered product means a product that is of a category for which an ENERGY STAR qualification or FEMP designation is established.

ENERGY STAR qualified product means a product that is rated for energy efficiency under an ENERGY STAR program established by section 324A of the Energy Policy and Conservation Act (42 U.S.C. 6294a).

FEMP designated product means a product that is designated under the Federal Energy Management Program as being among the highest 25 percent of equivalent products for energy efficiency.

§ 436.42 Evaluation of Life-Cycle Cost Effectiveness.

For the purpose of compliance with section 553 of the National Energy Conservation Policy Act:

(a) ENERGY STAR qualified and FEMP designated products may be assumed to be life-cycle cost-effective.

(b) In making a determination that a covered product is not life-cycle cost-effective, an agency should rely on the life-cycle cost analysis method in part 436, subpart A, of title 10 of the Code of Federal Regulations.

§ 436.43 Procurement planning.

(a) Agencies should consider the procurement planning requirements of section 553 of the National Energy Conservation Policy Act as applying to:

(1) Design, design/build, renovation, retrofit and services contracts; facility maintenance and operations contracts;

(2) Energy savings performance contracts and utility energy service contracts;

(3) If applicable, lease agreements for buildings or equipment, including build-to-lease contracts;

(b) Agencies should require the procurement of ENERGY STAR and FEMP designated products in new service contracts and other existing service contracts as they are recompeted and should, to the extent possible, incorporate such requirements and preferences into existing contracts as they are modified or extended through options.

(c) Agencies should include criteria for energy efficiency that are consistent with the criteria used for rating qualified products in the factors for the evaluation of:

(1) Offers received for procurements involving covered products, and

(2) Offers received for construction, renovation, and services contracts that include provisions for covered products.

(d) Agencies should notify their vendors of the Federal requirements for energy efficient purchasing.

Subparts D–E [Reserved]

Subpart F—Guidelines for General Operations Plans

AUTHORITY: Energy Policy and Conservation Act, as amended, 42 U.S.C. 6361; Executive Order 11912, as amended, 42 FR 37523 (July 20, 1977); National Energy Conservation Policy Act, title V, part 3, 42 U.S.C. 8251 *et seq.;* Department of Energy Organization Act, 42 U.S.C. 7254.

SOURCE: 45 FR 44561, July 1, 1980, unless otherwise noted.

§ 436.100 Purpose and scope.

(a) *Purpose*. The purpose of this subpart is to provide guidelines for use by Federal agencies in their development of overall 10-year energy management plans to establish energy conservation goals, to reduce the rate of energy consumption, to promote the efficient use of energy, to promote switching for petroleum-based fuels and natural gas to coal and other energy sources, to provide a methodology for reporting their progress in meeting the goals of those plans, and to promote emergency energy conservation planning to assuage the impact of a sudden disruption in the supply of oil-based fuels, natural gas or electricity. The plan is intended to provide the cornerstone for a program to conserve energy in the general operations of an agency.

(b) *Scope*. This subpart applies to all general operations of Federal agencies and is applicable to management of all energy used by Federal agencies that is excluded from coverage pursuant to section 543(a)(2) of part 3 of title V of the National Energy Conservation Policy Act, as amended (42 U.S.C. 8251–8261).

[45 FR 44561, July 1, 1980, as amended at 55 FR 48223, Nov. 20, 1990]

§ 436.101 Definitions.

As used in this subpart—

Automotive gasoline means all grades of gasoline for use in internal combustion engines except aviation gasoline. Does not include diesel fuel.

Aviation gasoline (AVGAS) means all special grades of gasoline for use in aviation reciprocating engines.

Btu means British thermal unit; the quantity of heat required to raise the temperature of one pound of water one degree Fahrenheit.

Cogeneration means the utilization of surplus energy, e.g., steam, heat or hot water produced as a by-product of the manufacture of some other form of energy, such as electricity. Thus, diesel generators are converted to cogeneration sets when they are equipped with boilers that make steam and hot water (usable as energy) from the heat of the exhaust and the water that cools the generator.

Diesel and petroleum distillate fuels means the lighter fuel oils distilled-off during the refining process. Included are heating oils, fuels, and fuel oil. The major uses of distillate fuel oils include heating, fuel for on- and off-highway diesel engines, marine diesel engines and railroad diesel fuel.

DOE means the Department of Energy.

Emergency conservation plan means a set of instructions designed to specify actions to be taken in response to a serious interruption of energy supply.

Energy efficiency goal means the ratio of production achieved to energy used.

Energy use avoidance means the amount of energy resources, e.g., gasoline, not used because of initiatives related to conservation. It is the difference between the baseline without a plan and actual consumption.

Facility means any structure or group of closely located structures, comprising a manufacturing plant, laboratory, office or service center, plus equipment.

Federal agency means any Executive agency under 5 U.S.C. 105 and the United States Postal Service, each entity specified in 5 U.S.C. 5721(1) (B) through (H) and, except that for purposes of this subpart, the Department of Defense shall be separated into four reporting organizations: the Departments of the Army, Navy and Air Force and the collective DOD agencies, with each responsible for complying with the requirements of this subpart.

Fiscal year or *FY* means, for a given year, October 1 of the prior year through September 30 of the given year.

Fuel types means purchased electricity, fuel oil, natural gas, liquefied petroleum gas, coal, purchased steam, automotive gasoline, diesel and petroleum distillate fuels, aviation gasoline, jet fuel, Navy special, and other identified fuels.

General operations means world-wide Federal agency operations, other than building operations, and includes services; production and industrial activities; operation of aircraft, ships, and land vehicles; and operation of Government-owned, contractor-operated plants.

General transportation means the use of vehicles for over-the-road driving as opposed to vehicles designed for off-road conditions, and the use of aircraft and vessels. This category does not include special purpose vehicles such as combat aircraft, construction equipment or mail delivery vehicles.

Goal means a specific statement of an intended energy conservation result which will occur within a prescribed time period. The intended result must be time-phased and must reflect expected energy use assuming planned conservation programs are implemented.

Guidelines means a set of instructions designed to prescribe, direct and regulate a course of action.

Industrial or production means the operation of facilities including buildings and plants which normally use large amounts of capital equipment, e.g., GOCO plants, to produce goods (hardware).

Jet fuel means fuels for use, generally in aircraft turbine engines.

Life cycle cost means the total cost of acquiring, operating and maintaining equipment over its economic life, including its fuel costs, determined on the basis of a systematic evaluation and comparison of alternative investments in programs, as defined in subpart A of this part.

Liquefied petroleum gas means propane, propylene-butanes, butylene, propane-butane mixtures, and isobutane that are produced at a refinery, a natural gas processing plant, or a field facility.

Maintenance means activities undertaken to assure that equipment and energy-using systems operate effectively and efficiently.

Measures means actions, procedures, devices or other means for effecting energy efficient changes in general operations which can be applied by Federal agencies.

Measure of performance means a scale against which the fulfillment of a requirement can be measured.

Navy special means a heavy fuel oil that is similar to ASTM grade No. 6 oil or Bunker C oil. It is used to power U.S. Navy ships.

Non-renewable energy source means fuel oil, natural gas, liquefied petroleum gas, synthetic fuels, and purchased steam or electricity, or other such energy sources.

Operational training and readiness means those activities which are necessary to establish or maintain an agency's capability to perform its primary mission. Included are major activities to provide essential personnel strengths, skills, equipment/supply inventory and equipment condition. General administrative and housekeeping activities are not included.

Overall plan means the comprehensive agency plan for conserving fuel and energy in all operations, to include both the Buildings Plan developed pursuant to subpart C of this part and the General Operations Plan.

Plan means those actions which an agency envisions it must undertake to assure attainment of energy consumption and efficiency goals without an unacceptably adverse impact on primary missions.

Program means the organized set of activities and allocation of resources directed toward a common purpose, objective, or goal undertaken or proposed by an agency in order to carry out the responsibilities assigned to it.

Renewable energy sources means sunlight, wind, geothermal, biomass, solid wastes, or other such sources of energy.

Secretary means the Secretary of the Department of Energy.

Services means the provision of administrative assistance or something of benefit to the public.

Specific Functional Category means those Federal agency activities which consume energy, or which are directly linked to energy consuming activities and which fall into one of the following groups: Services, General Transportation, Industrial or Production, Operational Training and Readiness, and Others.

Standard means an energy conservation measure determined by DOE to be applicable to a particular agency or agencies. Once established as a standard, any variance or decision not to adopt the measure requires a waiver.

Under Secretary means the Under Secretary of the Department of Energy.

Variance means the difference between actual consumption and goal.

656 Committee means the Interagency Federal Energy Policy Committee, the group designated in section 656 of the DOE Organization Act to provide general oversight for interdepartmental FEMP matters. It is chaired by the Under Secretary of DOE and includes the designated Assistant Secretaries or Assistant Administrator of the Department of Defense, Commerce, Housing and Urban Development, Transportation, Agriculture, Interior and the U.S. Postal Service and General Services Administration, along with similar level representatives of the National Aeronautics and Space Administration and the Veterans Administration.

§ 436.102 General operations plan format and content.

(a) Each Federal agency shall prepare and submit to the Under Secretary, DOE, within six months from the effective date of these guidelines, a general operations 10-year plan which shall consist of two parts, an executive summary and a text. Subsequent agency revisions to plans shall be included in each agency's annual report on progress which shall be forwarded to DOE by July 1 annually.

(b) The following information shall be included in each Federal agency general operations 10-year plan for the period of fiscal years 1980–1990:

(1) An Executive Summary which includes—

(i) A brief description of agency missions, and applicable functional categories pursuant to § 436.106(a)(2);

(ii) A Goals and Objectives Section which summarizes what energy savings or avoidance will be achieved during the plan period, and what actions will be taken to achieve those savings, and the costs and benefits of measures planned for reducing energy consumption, increasing energy efficiencies, and shifting to a more favorable fuel mix. Assumptions of environmental, safety and health effects of the goals should be included;

(iii) A chart depicting the agency organizational structure for energy management, showing energy management program organization for headquarters and for major subordinate elements of the agency;

(iv) A schedule for completion of requirements directed in this subpart, including phase-out of any procedures made obsolete by these guidelines; and

(v) Identification of any significant problem which may impede the agency from meeting its energy management goals.

(2) A Text which includes—

(i) A Goals and Objectives Section developed pursuant to § 436.103 describing agency conservation goals; these goals will be related to primary mission goals;

(ii) An Investment Section describing the agency planned investment program by fiscal year, pursuant to appendix B of this subpart, all measures selected pursuant to § 436.104, and the estimated costs and benefits of the measures planned for reducing energy consumption and increasing energy efficiencies;

(iii) An Organization Section which includes: (A) Designation of the principal energy conservation officer, such as an Assistant Secretary or Assistant Administrator, who is responsible for supervising the preparation, updating and execution of the Plan, for planning and implementation of agency energy conservation programs, and for coordination with DOE with respect to energy matters; (B) designation of a middle-level staff member as a point of contact to interface with the DOE Federal Programs Office at the staff level; and (C) designation of key staff members within the agency who are responsible for technical inputs to the plan or monitoring progress toward meeting the goals of the plan;

(iv) An Issues Section addressing problems, alternative courses of action for resolution, and agency recommendations that justify any decisions not to plan for or implement measures contained in appendix C of this subpart, and identifying any special projects, programs, or administrative procedures which may be beneficial to other Federal agency energy management programs:

(v) An implementing Instructions Section which includes a summary of implementing instructions issued by agency headquarters, and attachments of appropriate documents such as:

(A) Specific tasking resulting from development of the Plan;

(B) Guidance for the development of emergency conservation plans;

(C) Task milestones;

(D) Listing of responsible sub-agencies and individuals at both agency headquarters and subordinate units;

(E) Reporting and administrative procedures for headquarters and subordinate organizations;

(F) Report schedules pursuant to § 436.106(c);

(G) Schedules for feedback in order to facilitate plan updating, to include reviews of emergency conservation plans developed pursuant to § 436.105;

(H) Schedules for preparing and submitting the annual report on energy management pursuant to § 436.106(a);

(I) Schedules of plan preparation and publication;

(J) Communication, implementation, and control measures such as inspections, audits, and others; and

(vi) An Emergency Conservation Plan Summary Section pursuant to the requirements of § 436.105(d).

(3) Appendices which are needed to discuss and evaluate any innovative energy conserving technologies or methods, not included in this part, which the agency has identified for inclusion in its plan.

(c) Each plan must be approved and signed by the principal energy conservation officer designated pursuant to paragraph (b)(2) of this section.

§ 436.103 Program goal setting.

(a) In developing and revising plans for a projected 10-year plan each agency shall establish and maintain energy conservation goals in accordance with the requirements of this section.

(b) Agencies shall establish three types of conservation goals:

(1) Energy consumption goals, by fuel type by functional category (see appendix B).

(2) Energy efficiency goals by fuel type by functional category (see appendix B).

(3) Fuel switching goals for shifting energy use from oil and natural gas to other fuels in more plentiful supply from domestic sources (see appendix B).

(c) General operations energy conservation goals shall be established by each Federal agency with the broad purpose of achieving reductions in total energy consumption and increased efficiency without serious mission degradation or unmitigated negative environmental impacts. Within the broad framework, each agency should seek first to reduce energy consumption per unit of output in each applicable functional category. In evaluating energy efficiency, each agency should select and use standards of measurement which are consistent throughout the planning period. Particular attention should be given to increased energy use efficiency in nonrenewable fuel consumption. The second focus of attention should be on initiatives which shift energy use from oil and natural gas to other fuels in more plentiful supply from domestic sources.

§ 436.104 Energy conservation measures and standards.

(a) Each agency shall consider for inclusion in its plan the measures identified in appendix C of this subpart.

(b) The following questions should be considered in the evaluation of each measure:

(1) Does this measure provide an incentive or disincentive?

(2) What is the estimate of savings by fuel type?

(3) What are the direct and indirect impacts of this measure?

(4) Is this measure to be mandatory throughout the agency?

(5) If not mandatory, under what circumstances will it be implemented, and who will be responsible for determining specific applicability?

(6) Who will be the direct participants in the implementation of this measure?

(7) What incentives (if any) are to be provided for the participants?

(8) When will this measure be implemented?

(9) Will this measure be implemented in a single step or will it be phased in? If it will be phased in, over what period of time?

(10) Will performance of the measure be evaluated and reported?

(11) By what criterion will performance be determined?

(12) Who will prepare performance reports?

(13) What is the reporting chain?

(14) What is the reporting period?

(c) Each agency will take all necessary steps to implement the energy conservation standards for general operations listed in appendix A (reserved).

§ 436.105 Emergency conservation plan.

(a) Each agency shall establish an emergency conservation plan, a summary of which shall be included in the general operations plan, for assuaging the impact of a sudden disruption in the supply of oil-based fuels, natural gas or electricity. Priorities for temporarily reducing missions, production, services, and other programmatic or functional activities shall be developed in accordance with paragraph (b) of this section. Planning for emergencies is to address both buildings and general operations. Provisions shall be made for testing emergency actions to ascertain that they are effective.

(b) Federal agencies shall prepare emergency conservation plans for 10 percent, fifteen percent, and 20 percent reduction compared to the previous fiscal year in gasoline, other oil-based fuels, natural gas, or electricity for periods of up to 12 months. In developing these plans, agencies shall consider the potential for emergency reductions in energy use in buildings and facilities which the agency owns, leases, or has under contract and by employees through increased use of car and van pooling, preferential parking for multipassenger vehicles, and greater use of mass transit. Agencies may formulate whatever additional scenarios they consider necessary to plan for various energy emergencies.

(c) In general, Federal agencies' priorities shall go to those activities which directly support the agencies' primary missions. Secondary mission activities which must be curtailed or deferred will be reported to DOE as mission impacts. The description of mission impacts shall include estimates of the associated resources and time required to mitigate the effects of the reduction in energy. Other factors or assumptions to be used in energy conservation emergency planning are as follows:

(1) Agencies will be given 15–30 days notice to implement any given plan.

(2) Substitution of fuels in plentiful supply for fuels in short supply is authorized, if the substitution can be completed within a 3-month period and the cost is within the approval authority of the executive branch.

(3) All costs and increases in manpower or other resources associated with activities or projects to assuage mission impacts will be clearly defined in respective agency plans. One-time costs will be identified separately.

(4) Confronting the emergency situation will be considered a priority effort and all projects and increases in operating budgets within the approval authority of the executive branch will be expeditiously considered and approved if justified.

(d) Summary plans for agency-wide emergency conservation management shall be provided to DOE pursuant to § 436.102(b)(2)(vi). Such summaries shall include:

(1) Agency-wide impacts of energy reductions as determined in accordance with paragraph (b) of this section.

(2) Actions to be taken agency-wide to alleviate the energy shortfalls as they occur.

(3) An assessment of agency services or production that may need to be curtailed or limited after corrective actions have been taken.

(4) A summation of control and feedback mechanisms for managing an energy emergency situation.

§ 436.106 Reporting requirements.

(a) By July 1 of each year each Federal agency shall submit an ''Annual Report on Energy Management'' based on fiscal year data to the Secretary of DOE. The general operations portion of this report will encompass all agency energy use not reported in the buildings portion and shall include:

(1) A summary evaluation of progress toward the achievement of energy consumption, energy efficiency, and fuel switching goals established by the agency in its plans;

(2) Energy consumption reported by functional categories. Reports must include General Transportation and one

or more of the following functional categories: industrial or production, services, operational training and readiness, and other. Agencies may report in subcategories of their own choosing. The following information is to be reported for the usage of each fuel type in physical units for each selected functional category:

(i) Total energy consumption goal;

(ii) Total energy consumed;

(iii) Total energy use avoidance;

(iv) Variance between actual consumption and consumption goal;

(v) Cost saved;

(vi) Status of planned investments, and if different from the investment program upon which existing goals are based, the expected impact on meeting goals; and

(vii) Summary of any other benefits realized.

(3) The energy efficiencies as calculated in accordance with appendix B of this subpart, or by an equivalent method, for the appropriate functional categories identified in paragraph (a)(2) of this section. The following information is to be reported for the energy efficiency for each fuel type by functional category:

(i) Energy efficiency goal;

(ii) Efficiency for the reporting period;

(iii) Summary of any other benefits realized.

(4) A summary of fuel switching progress including:

(i) Description and cost of investments in fuel switching;

(ii) Avoidance in use of oil-based fuels and natural gas;

(iii) Increased use of solar, wood, gasohol and other renewable energy sources;

(iv) Increased use of coal and coal derivatives, and

(v) Use of all other alternative fuels.

(b) Each agency's annual report shall be developed in accordance with a format to be provided by DOE and will include agency revisions to 10-year plans.

(c) Agencies whose annual total energy consumption exceeds one hundred billion Btu's, shall, in addition to the annual report required under paragraph (a) of this section, submit quarterly reports of the energy usage information specified in paragraph (a)(2) of this section.

(d) Agencies who consume energy in operations in foreign countries will include data on foreign operations if foreign consumption is greater than 10% of that consumed by the agency in the United States, its territories and possessions. If an agency's estimated foreign consumption is less than 10% of its total domestic energy use, reporting of foreign consumption is optional. Reports should be annotated if foreign consumption is not included.

[45 FR 44561, July 1, 1980, as amended at 51 FR 4586, Feb. 6, 1986]

§ 436.107 Review of plan.

(a) Each plan or revision of a plan shall be submitted to DOE and DOE will evaluate the sufficiency of the plan in accordance with the requirements of this subpart. Written notification of the adequacy of the plan including a critique, will be made by DOE and sent to the agency submitting the plan or revision within 60 days of submission. Agencies shall be afforded an opportunity to modify and return the plan within an appropriate period of time for review by DOE.

(b) A general operations plan under the guidelines will be evaluated with respect to:

(1) Adequacy of information or plan content required to be included by § 436.102;

(2) Adequacy of goal setting methodology or baseline justification as stated in § 436.103;

(3) Adequacy of a well-justified investment program which considers all measures included in appendix C of this subpart; and

(4) Other factors as appropriate.

(c) After reviewing agency plans or revisions of plans, the Under Secretary of DOE, may submit to the ''656'' Committee for its recommendation, major problem areas or common deficiencies.

(d) Status of the plan review, the Under Secretary's decisions, and ''656'' Committee recommendations, will be published as appropriate in the DOE annual report to the President, titled ''Energy Management in the Federal Government.''

§ 436.108 Waivers.

(a) Any Federal agency may submit a written request to the Under Secretary for a waiver from the procedures and requirements of this subpart. The request for a waiver must identify the specific requirements and procedures of this subpart from which a waiver is sought and provide a detailed explanation, including appropriate information or documentation, as to why a waiver should be granted.

(b) A request for a waiver under this section must be submitted at least 60 days prior to the due date for the required submission.

(c) A written response to a request for a waiver will be issued by the Under Secretary no later than 30 days from receipt of the request. Such a response will either (1) grant the request with any conditions determined to be necessary to further the purposes of this subpart, (2) deny the request based on a determination that the reasons given in the request for a waiver do not establish a need that takes precedence over the futherance of the purposes of this subpart, or (3) deny the request based on the failure to submit adequate information upon which to grant a waiver.

(d) A requested waiver may be submitted by the Under Secretary to the ''656'' Committee for its review and recommendation. The agency official that submitted the request may attend any scheduled meeting of the ''656'' Committee at which the request is planned to be discussed. The determination to approve or disapprove a request for a waiver shall be made by the Under Secretary.

(e) Status of the requests for a waiver, the Under Secretary's decisions, and ''656'' Committee recommendations, will be published, as appropriate, in the DOE annual report to the President, entitled ''Energy Management in the Federal Government.''

APPENDIX A TO PART 436—ENERGY CONSERVATION STANDARDS FOR GENERAL OPERATIONS [RESERVED]

APPENDIX B TO PART 436—GOAL SETTING METHODOLOGY

In establishing and updating agency goals for energy conservation, the following methodology or an equivalent method should be utilized:

(a) For overall energy consumption—

(1) An analysis shall be made to determine what factors have the most significant impact upon the amount of each fuel type used by the agency in performing functions in support of its overall mission. Consideration is to be given, but not limited to, the following factors: Number of people using energy; number of vehicles using gasoline; amounts of other equipment using energy; tempo of operations (one, two, or three shifts); the type of operations (degree of equipment or labor intensity); equipment fuel limitations; environmental conditions (tropical versus arctic, etc.); budget levels for fuel, operations, maintenance, and equipment acquisition; and phase-out schedule (of older equipment or plants which may be inefficient). After identifying these factors, a further analysis shall be made to identify any projected workload changes in the quality or quantity of these factors on a yearly basis up to 1990.

(2) Based upon the analysis in (a)(1) and an evaluation of available information on past energy usage, a baseline of energy use by fuel type by functional category shall be established beginning with FY 1975. In addition to ''General Transportation,'' other functional categories should be selected to enhance energy management. Total fuel use for a particular activity may be allocated to the functional category for which the preponderance of fuel is used. Figure B–1 is an example of one such baseline.

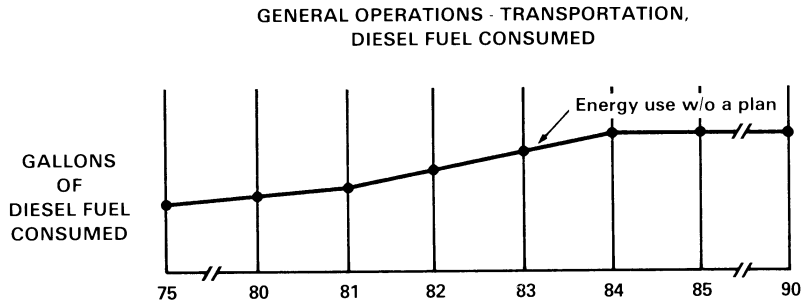

FIGURE B-1: GENERAL OPERATIONS - TRANSPORTATION, DIESEL FUEL CONSUMED

This example shows an increase in energy use, for a specific fuel type, during the period 1975–1981, with a further increase from 1981 to 1984 and a leveling off and no growth from 1984–1990. A justification, based on factors as discussed above, shall accompany each baseline.

(3) Thereafter, analyses should be made of the measures available for reducing the energy consumption profiles without adverse impact on mission accomplishment. Finding viable opportunities for reducing energy use, increasing energy efficiency and switching energy sources, will require consultation with specialists in the fields of operations, maintenance, engineering, design, and economics, and consideration of the measures identified in appendix C. The DOE Federal Energy Management Programs Office can, upon request, provide information on where such resources can be located. Once these measures are identified, they are to be incorporated into a time-phased investment program, (using where appropriate, the life cycle costing factors and methodology in subpart A of this part). If investment and other costs for implementing a measure are insignificant, a Federal agency may presume that a measure is cost-effective without further analysis. An estimate must then be made as to the lead time required to implement the program and realize energy reductions.

Figure B–2 shows a summarized investment program, which should be accompanied by a detailed description of the measures, projects, and programs making up the total planned investments for each year. This summary need not be by function or fuel type.

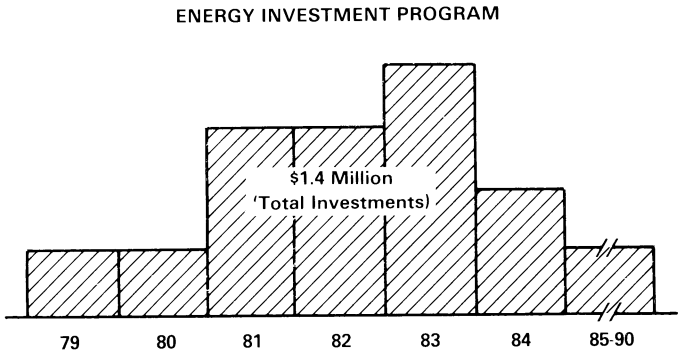

FIGURE B-2: ENERGY INVESTMENT PROGRAM

These analyses should enable the agency to project an energy consumption goal, with the assumption that funds for executing the planned projects will be approved. Figure B–3 shows a new energy use profile, with planned initiatives and related investments taken into consideration, and the resulting goal entitled ''Energy Use With A Plan'' superimposed on Figure B–1. Included are the anticipated effects on consumption cause by improvements in energy efficiency and fuel switching.

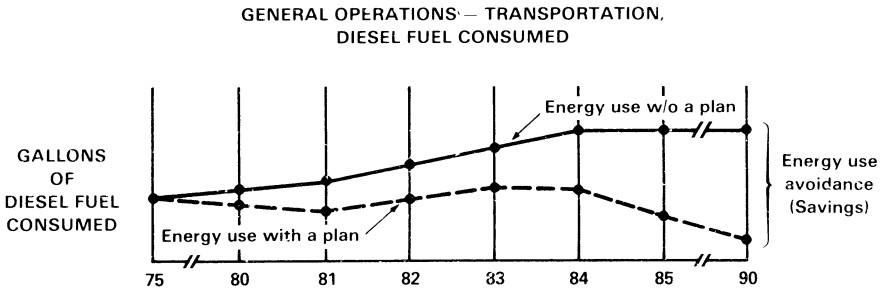

FIGURE B-3: GENERAL OPERATIONS — TRANSPORTATION, DIESEL FUEL CONSUMED

A comparison of these projections will show the energy use avoidance resulting from the investment program as depicted in Figure B–2. Using the prices of fuel contained in appendix C to subpart A, the dollars saved can be projected against the dollars invested. Life cycle costing methodology pursuant to subpart A, will be used to determine priorities for submitting individual initiatives into the appropriate budget year.

(b) For energy efficiencies—Energy efficiency baselines and goals for each fuel type shall be calculated using the same consumption factors and similar methodology to that outlined in paragraph (a). Energy consumption by fuel type shall be linked to mission through the functional categories listed in §436.106(a)(2). This will identify a rate which will indicate energy efficiency trends. This linkage may be accomplished through the following algorithm:

Step 1: Determine functional categories from section 436.106(a)(2) which best describe the Agency overall mission.

Step 2: Determine types of fuels used to support the functions selected in Step 1.

Step 3: Determine quantities of fuel consumed or planned for consumption over a specific period of time.

Step 4: Determine quantity of output of function for same period of time used in Step 3. Quantify output in a standard measure which best describes functional category.

Step 5: Determine the energy efficiency ratio by dividing quantity from Step 4 by quantity from Step 3.

This ratio of fuel consumed to a unit measure of output will be used to develop a projection of a baseline and goals through 1990, and used in reporting variance. Examples of ratios that should be considered are:

- Production or industrial process type operations

Ton of product

Cu. ft. of natural gas

- Services, such as postal delivery

Customers served or pounds delivered

Gallons of automotive gasoline

- General transportation

Passenger miles

Gallons of automotive gasoline

- Training

Persons trained or in training

Gallons of navy special

Agencies shall select one or more of these ratios, which shall be used throughout the planning period, or use more appropriate energy efficiency ratios, to describe their overall functions. Figure B–4 illustrates the planning baseline and goal resulting from this type of analysis.

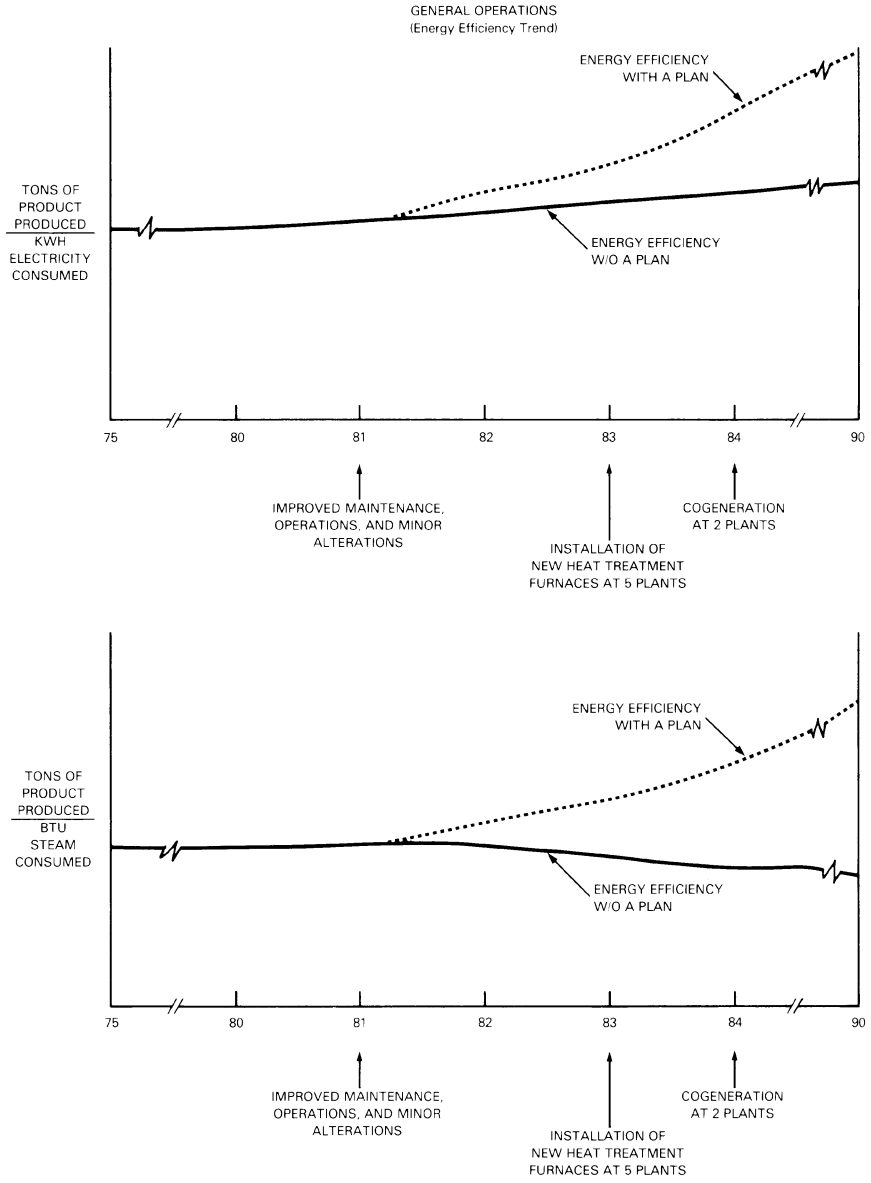

FIGURE B-4: GENERAL OPERATIONS, ELECTRICITY, STEAM CONSUMED.

(c) For fuel switching—Fuel switching goals for gasoline other oil-based fuel and natural gas may be calculated as follows:

Step 1: For each fiscal year, identify investments, where appropriate, in fuel switching

from gasoline, other oil-based fuel and natural gas to alternate renewable or nonrenewable fuel sources.

Step 2: Project for each fiscal year, the avoidance in the use of gasoline, other oil-based fuel and natural gas resulting from previous fuel switching investments.

Completion of these steps will permit the formulation of charts such as that shown in Figure B–5.

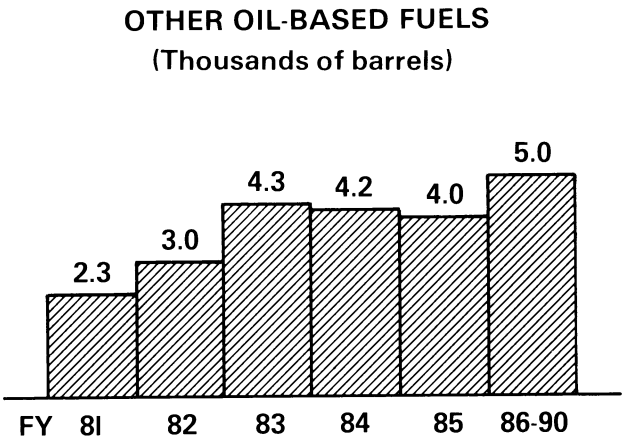

FIGURE B-5
FUEL SWITCHING GOALS

APPENDIX C TO PART 436—GENERAL OPERATIONS ENERGY CONSERVATION MEASURES

(a) The following individual measures or set of measures must be considered for inclusion in each agency 10-year energy management plan:

(1) Federal Employee Ridesharing Programs—Includes the use of vanpooling and carpooling and complies with existing orders and regulations governing parking for vanpools and carpools.

(2) Fleet Profile Change—Includes energy considerations in equipment selection and assignment.

(3) Fleet Mileage Efficiency—Includes agency plans to implement existing orders, goals, and laws related to vehicle fuel economy.

(4) Driver Training—Includes development of appropriate programs for training operators of U.S. Government vehicles in energy conservation.

(5) Maintenance Procedures Improvement—Includes activities to insure proper vehicle maintenance to optimize energy conservation.

(6) Operating Procedures Improvement—Includes use of cooperative passenger shuttle and courier services on an interagency or other basis within each metropolitan area.

(7) Mass Transit—Includes employee use of existing services for business-related activities and commuting.

(8) Public Education to Promote Vanpooling and Carpooling—Includes activities to support the EPCA requirement to establish ''responsible public education programs to promote vanpooling and carpooling arrangements'' through their employee awareness programs.

(9) Elimination of Free or Subsidized Employee Parking—Includes elimination of free or subsidized employee parking on Federal installations in accordance with OMB Cir. A–118, August 13, 1979.

(10) Two-Wheeled Vehicle Programs—Includes activities to encourage the substitution of bicycles, mopeds, etc. for automobiles for commuting and operational purposes. These may include the establishment of weather-protected secure storage facilities, shower and locker facilities, and restricted routes for these vehicles on Federal property. Cooperative programs with local civil authorities may also be included.

(11) Consolidation of Facilities and Process Activities—Includes such measures as physical consolidation of operations to minimize intra-operational travel and may include facility closure or conversion. Alternative work patterns, availability of transportation, energy source availability, and technical and financial feasibility are among the considerations that should be evaluated.

(12) Agency Procurement Programs—Includes activities to ensure that energy conservation opportunities are fully exploited with respect to the agency's procurement programs including procurements relating to operations and maintenance activities; e.g., (a) giving preference to fuel-efficient products whenever practicable, and (b) ensuring that agency's contractors having a preponderance of cost-type contracts pursue a comprehensive energy conservation program.

(13) Energy Conservation Awareness Programs—Includes programs aimed toward gaining and perpetuating employee awareness and participation in energy conservation measures on the job and in their personal activities.

(14) Communication—Includes substitution of communications for physical travel.

(15) Dress Code—Includes measures to allow employees greater freedom in their choice of wearing apparel to promote greater participation in conservation.

(16) Land Use—Includes energy considerations to be employed in new site selection, such as colocation.

(17) Automatic Data Processing (ADP)—Includes all energy aspects of ADP operation and equipment selection.

(18) Aircraft Operations—Includes energy-conserving measures developed for both military and Federal administrative and research and development aircraft operations.

(19) GOCO Facilities and Industrial Plants Operated by Federal Employees—Includes development of energy conservation plans at these facilities and plants which contain measures such as energy efficient periodic maintenance.

(20) Energy Conserving Capital Plant and Equipment Modification—Includes development of energy conservation and life cycle cost parameter measures for replacement of capital plant and equipment.

(21) Process Improvements—Includes measures to improve energy conservation in industrial process operations. These may include consideration of equipment replacement or modification, as well as scheduling and other operational changes.

(22) Improved Steam Maintenance and Management—Includes measures to improve energy efficiency of steam systems. These may include improved maintenance, installation of energy-conserving devices, and the operational use of substitutes for live steam where feasible.

(23) Improvements in Waste Heat Recovery—Includes measures utilizing waste heat for other purposes.

(24) Improvement in Boiler Operations—Includes energy-conserving retrofit measures for boiler operations.

(25) Improved Insulation—Includes measures addressing the addition or replacement of insulation on pipes, storage tanks, and in other appropriate areas.

(26) Scheduling by Major Electric Power Users—Includes measures to shift major electrical power demands to non-peak hours, to the maximum extent possible.

(27) Alternative Fuels—Includes measures to alter equipment such as generators to use lower quality fuels and to fill new requirements with those that use alternative fuels. The use of gasohol in stationary gasoline-powered equipment should be considered, in particular.

(28) Cogeneration—Includes measures to make full use of cogeneration in preference to single-power generation.

(29) Mobility Training and Operational Readiness—Includes measures which can reduce energy demands through the use of simulators, communications, computers for planning, etc.

(30) Energy Conservation Inspection or Instruction Teams—Includes measures which formulate and perpetuate the review of energy conservation through inspections to determine where specific improvements can be made and then followed by an instruction and training program.

(31) Intra-agency and Interagency Information Exchange Program—Includes measures providing a free exchange of energy conservation ideas and experiences between elements of an agency and between other agencies in the same geographic area.

(32) Recycled Waste—Includes measures to recycle waste materials such as paper products, glass, aluminum, concrete and brick, garbage, asphalt road materials or any material which requires a petroleum base.

(33) Fuel Conversion—Includes measures to accomplish conversion from petroleum based fuels and natural gas to coal and other alternative fuels for appropriate equipment.

(34) Operational Lighting—Includes measures to reduce energy consumption for lighting in operational areas and GOCO plants by: switching off by means of automatic controls; maximizing the use of daylight by floor planning; keeping window and light fixtures clean and replacing fixtures when they begin to deteriorate, rather than when they fail altogether; providing automatic dimmer controls to reduce lighting when daylight increases; and cleaning the work area during daylight, if possible, rather than at night.

(35) Lighting Fixtures—Includes measures to increase energy efficiency of lighting. The following reveals the relative efficiencies of common lamp types.

Lamp type	Lumens watt	Improvement over tungsten
Tungsten lamp	12	X1
Modern fluorescent lamp	85	X7
Mercury halide lamp	100	X8
High pressure sodium lamp	110	X9
Low pressure sodium lamp	180	X15

(36) Industrial Buildings Heating—Includes measures to improve the energy conservation of industrial buildings such as: fixing holes in roofs, walls and windows; fitting flexible doors, fitting controls to heating systems; use of ''economizer units'' which circulate hot air back down from roof level to ground level; use of controlled ventilation; insulation of walls and roof; use of ''optimisers'' or optimum start controls in heating systems, so that the heating switch-on is dictated by actual temperature conditions rather than simply by time.

(37) Hull Cleaning and Antifouling Coating—Includes measures to reduce energy consumption through periodic cleaning of hulls and propellers or through the use of antifouling coatings.

(38) [Reserved]

(39) Building Temperature Restrictions on Thermostat Setting for Heating, Cooling and Hot Water—Includes enforcement of suggested restriction levels: 65 degrees for heating, 78 degrees for cooling, and 105 degrees or ban for hot water.

(40) Such other measures as DOE may from time-to-time add to this appendix, or as the Federal agency concerned may find to be energy-saving or efficient.

APPENDIX D TO PART 436—ENERGY PROGRAM CONSERVATION ELEMENTS

(a) In all successful energy conservation programs, certain key elements need to be present. The elements listed below must be incorporated into each agency conservation program and must be reflected in the 10-year plan prescribed in §436.102. Those organizations that have already developed programs should review them to determine whether the present management systems incorporate these elements.

(1) *Top Management Control.* Top management must have a personal and sustained commitment to the program, provide active direction and motivation, and require regular review of overall energy usage at senior staff meetings.

(2) *Line Management Accountability*. Line managers must be accountable for the energy conservation performance of their organizations and should participate in establishing realistic goals and developing strategies and budgets to meet these goals.

(3) *Formal Planning.* An overall 10-year plan for the period 1980–1990 must be developed and formalized which sets forth performance-oriented conservation goals, including the categorized reduction in rates of energy consumption that the program is expected to realize. The plan will be supplemented by guidelines enumerating specific conservation procedures that will be followed. These procedures and initiatives must be life cycle cost-effective as well as energy efficient.

(4) *Goals.* Goals must be established in a measurable manner to answer questions of ''Where are we?'' ''Where do we want to go?'' ''Are we getting there?'' and ''Are our initiatives for getting there life cycle cost-effective?''

(5) *Monitoring.* Progress must be reviewed periodically both at the agency headquarters and at local facility levels to identify program weakness or additional areas for conservation actions. Progress toward achievement of goals should be assessed, and explanations should be required for non-achievement or unusual variations in energy use. Monitoring should include personal inspections and staff visits, management information reporting and audits.

(6) *Using Technical Expertise.* Personnel with adequate technical background and knowledge of programmatic objectives should be used to help management set technical goals and parameters for efficient planning and implementation of energy conservation programs. These technicians should work in conjunction with the line managers who are accountable for both mission accomplishment and energy conservation.

(7) *Employee Awareness.* Employees must gain an awareness of energy conservation through formal training and employee information programs. They should be invited to participate in the process of developing an energy conservation program, and to submit definitive suggestions for conservation of energy.

(8) *Energy Emergency Planning.* Every energy management plan must provide for programs to respond to contingencies that may occur at the local, state or National level. Programs must be developed for potential energy emergency situations calling for reductions of 10 percent, 15 percent and 20 percent for up to 12 months. Emergency plans must be tested to ascertain their effectiveness.

(9) *Budgetary and Fiscal Support.* Resources necessary for the energy conservation program must be planned and provided for, and the fiscal systems adjusted to support energy management investments and information reporting.

(10) *Environmental Considerations.* Each agency shall fulfill its obligations under the National Environmental Policy Act in developing its plan.

PART 440—WEATHERIZATION ASSISTANCE FOR LOW-INCOME PERSONS

Sec.
440.1 Purpose and scope.
440.2 Administration of grants.
440.3 Definitions.
440.10 Allocation of funds.
440.11 Native Americans.
440.12 State application.
440.13 Local application.
440.14 State plans.
440.15 Subgrantees.
440.16 Minimum program requirements.
440.17 Policy Advisory Council.
440.18 Allowable expenditures.
440.19 Labor.
440.20 Low-cost/no-cost weatherization activities.
440.21 Weatherization materials standards and energy audit procedures.
440.22 Eligible dwelling units.
440.23 Oversight, training, and technical assistance.
440.24 Recordkeeping.
440.25 Reports.
440.26–440.29 [Reserved]
440.30 Administrative review.
APPENDIX A TO PART 440—STANDARDS FOR WEATHERIZATION MATERIALS

AUTHORITY: 42 U.S.C. 6861 *et seq.;* 42 U.S.C. 7101 *et seq.*

SOURCE: 49 FR 3629, Jan. 27, 1984, unless otherwise noted.

§ 440.1 Purpose and scope.

This part implements a weatherization assistance program to increase the energy efficiency of dwellings owned or occupied by low-income persons or to provide such persons renewable energy systems or technologies, reduce their total residential expenditures, and improve their health and safety, especially low-income persons who are particularly vulnerable such as the elderly, persons with disabilities, families with children, high residential energy users, and households with high energy burden.

[65 FR 77217, Dec. 8, 2000, as amended at 71 FR 35778, June 22, 2006]

§ 440.2 Administration of grants.

Grant awards under this part shall comply with applicable law including, without limitation, the requirements of:

(a) Executive Order 12372 entitled ''Intergovernmental Review of Federal Programs'', 48 FR 3130, and the DOE Regulation implementing this Executive Order entitled ''Intergovernmental Review of Department of Energy Programs and Activities'' (10 CFR part 1005);

(b) Office of Management and Budget Circular A–97, entitled ''Rules and Regulations Permitting Federal Agencies to Provide Specialized or Technical Services to State and Local Units of Government under Title III of the Inter-Governmental Coordination Act of 1968;''

(c) Unless in conflict with provisions of this part, the DOE Financial Assistance Rule (10 CFR part 600); and

(d) Such other procedures applicable to this part as DOE may from time to time prescribe for the administration of financial assistance.

(e)(1) States, Tribes and their subawardees, including, but not limited to subrecipients, subgrantees, contractors and subcontractors that participate in the program established under this Part are required to treat all requests for information concerning applicants and recipients of WAP funds in a manner consistent with the Federal Government's treatment of information requested under the Freedom of Information Act (FOIA), 5 U.S.C. 552, including the privacy protections contained in Exemption (b)(6) of the FOIA, 5 U.S.C. 552(b)(6). Under 5 U.S.C. 552(b)(6), information relating to an individual's eligibility application or the individual's participation in the program, such as name, address, or income information, are generally exempt from disclosure.

(2) A balancing test must be used in applying Exemption (b)(6) in order to determine:

(i) Whether a significant privacy interest would be invaded;

(ii) Whether the release of the information would further the public interest by shedding light on the operations or activities of the Government; and

(iii) Whether in balancing the privacy interests against the public interest, disclosure would constitute a clearly unwarranted invasion of privacy.

(3) A request for personal information including but not limited to the names, addresses, or income information of WAP applicants or recipients

would require the State or other service provider to balance a clearly defined public interest in obtaining this information against the individuals' legitimate expectation of privacy.

(4) Given a legitimate, articulated public interest in the disclosure, States and other service providers may release information regarding recipients in the aggregate that does not identify specific individuals. However, a State or service provider must apply an FOIA Exemption (b)(6) balancing test to any request for information that can not be satisfied by such less-intrusive methods.

[49 FR 3629, Jan. 27, 1984, as amended at 75 FR 11422, Mar. 11, 2010; 77 FR 11737, Feb. 28, 2012]

§ 440.3 Definitions.

As used in this part:

Act means the Energy Conservation in Existing Buildings Act of 1976, as amended, 42 U.S.C. 6851 *et seq*.

Assistant Secretary means the Assistant Secretary for Conservation and Renewable Energy or official to whom the Assistant Secretary's functions may be redelegated by the Secretary.

Base Allocation means the fixed amount of funds for each State as set forth in § 440.10(b)(1).

Base temperature means the temperature used to compute heating and cooling degree days. The average daily outdoor temperature is subtracted from the base temperature to compute heating degree days, and the base temperature is subtracted from the average daily outdoor temperature to compute cooling degree days.

Biomass means any organic matter that is available on a renewable or recurring basis, including agricultural crops and trees, wood and wood wastes and residues, plants (including aquatic plants), grasses, residues, fibers, and animal wastes, municipal wastes, and other waste materials.

CAA means a Community Action Agency.

Capital-Intensive furnace or cooling efficiency modifications means those major heating and cooling modifications which require a substantial amount of funds, including replacement and major repairs, but excluding such items as tune-ups, minor repairs, and filters.

Children means dependents not exceeding 19 years or a lesser age set forth in the State plan.

Community Action Agency means a private corporation or public agency established pursuant to the Economic Opportunity Act of 1964, Pub. L. 88–452, which is authorized to administer funds received from Federal, State, local, or private funding entities to assess, design, operate, finance, and oversee antipoverty programs.

Cooling Degree Days means a population-weighted annual average of the climatological cooling degree days for each weather station within a State, as determined by DOE.

Deputy Assistant Secretary means the Deputy Assistant Secretary for Technical and Financial Assistance or any official to whom the Deputy Assistant Secretary's functions may be redelegated by the Assistant Secretary.

DOE means the Department of Energy.

Dwelling Unit means a house, including a stationary mobile home, an apartment, a group of rooms, or a single room occupied as separate living quarters.

Elderly Person means a person who is 60 years of age or older.

Electric base-load measures means measures which address the energy efficiency and energy usage of lighting and appliances.

Family Unit means all persons living together in a dwelling unit.

Formula Allocation means the amount of funds for each State as calculated based on the formula in § 440.10(b)(3).

Formula Share means the percentage of the total formula allocation provided to each State as calculated in § 440.10 (b)(3).

Governor means the chief executive officer of a State, including the Mayor of the District of Columbia.

Grantee means the State or other entity named in the Notification of Grant Award as the recipient.

Heating Degree Days means a population-weighted seasonal average of the climatological heating degree days for each weather station within a State, as determined by DOE.

High residential energy user means a low-income household whose residential energy expenditures exceed the median level of residential expenditures for all low-income households in the State.

Household with a high energy burden means a low-income household whose residential energy burden (residential expenditures divided by the annual income of that household) exceeds the median level of energy burden for all low-income households in the State.

Incidental Repairs means those repairs necessary for the effective performance or preservation of weatherization materials. Such repairs include, but are not limited to, framing or repairing windows and doors which could not otherwise be caulked or weatherstripped and providing protective materials, such as paint, used to seal materials installed under this program.

Indian Tribe means any tribe, band, nation, or other organized group or community of Native Americans, including any Alaskan native village, or regional or village corporation as defined in or established pursuant to the Alaska Native Claims Settlement Act, Pub. L. 92–203, 85 Stat. 688, which (1) is recognized as eligible for the special programs and services provided by the United States to Native Americans because of their status as Native Americans, or (2) is located on, or in proximity to, a Federal or State reservation or rancheria.

Local Applicant means a CAA or other public or non profit entity unit of general purpose local government.

Low income means that income in relation to family size which:

(1) At or below 200 percent of the poverty level determined in accordance with criteria established by the Director of the Office of Management and Budget, except that the Secretary may establish a higher level if the Secretary, after consulting with the Secretary of Agriculture and the Secretary of Health and Human Services, determines that such a higher level is necessary to carry out the purposes of this part and is consistent with the eligibility criteria established for the weatherization program under Section 222(a)(12) of the Economic Opportunity Act of 1964;

(2) Is the basis on which cash assistance payments have been paid during the preceding twelve month-period under Titles IV and XVI of the Social Security Act or applicable State or local law; or

(3) If a State elects, is the basis for eligibility for assistance under the Low Income Home Energy Assistance Act of 1981, provided that such basis is at least 200 percent of the poverty level determined in accordance with criteria established by the Director of the Office of Management and Budget.

Native American means a person who is a member of an Indian tribe.

Non-Federal leveraged resources means those benefits identified by State or local agencies to supplement the Federal grant activities and that are made available to or used in conjunction with the DOE Weatherization Assistance Program for the purposes of the Act for use in eligible low-income dwelling units.

Persons with Disabilities means any individual (1) who is a handicapped individual as defined in section 7(6) of the Rehabilitation Act of 1973, (2) who is under a disability as defined in section 1614(a)(3)(A) or 223(d)(1) of the Social Security Act or in section 102(7) of the Developmental Disabilities Services and Facilities Construction Act, or (3) who is receiving benefits under chapter 11 or 15 of title 38, U.S.C.

Program Allocation means the base allocation plus formula allocation for each State.

Relevant Reporting Period means the Federal fiscal year beginning on October 1 and running through September 30 of the following calendar year.

Renewable energy system means a system which when installed in connection with a dwelling—

(1) Transmits or uses solar energy, energy derived from geothermal deposits, energy derived from biomass (or any other form of renewable energy which DOE subsequently specifies through an amendment of this part) for the purpose of heating or cooling such dwelling or providing hot water or electricity for use within such dwelling; or wind energy for nonbusiness residential purposes; and

(2) Which meets the performance and quality standards prescribed in § 440.21 (c) of this part.

Rental Dwelling Unit means a dwelling unit occupied by a person who pays rent for the use of the dwelling unit.

Residential Energy Expenditures means the average annual cost of purchased residential energy, including the cost of renewable energy resources.

Secretary means the Secretary of the Department of Energy.

Separate Living Quarters means living quarters in which the occupants do not live and eat with any other persons in the structure and which have either direct access from the outside of the building or through a common hall or complete kitchen facilities for the exclusive use of the occupants. The occupants may be a single family, one person living alone, two or more families living together, or any other group of related or unrelated persons who share living arrangements, and includes shelters for homeless persons.

Shelter means a dwelling unit or units whose principal purpose is to house on a temporary basis individuals who may or may not be related to one another and who are not living in nursing homes, prisons, or similar institutional care facilities.

Single-Family Dwelling Unit means a structure containing no more than one dwelling unit.

Skirting means material used to border the bottom of a dwelling unit to prevent infiltration.

State means each of the States, the District of Columbia, American Samoa, Guam, Commonwealth of the Northern Mariana Islands, Commonwealth of Puerto Rico, and the Virgin Islands.

Subgrantee means an entity managing a weatherization project which receives a grant of funds awarded under this part from a grantee.

Support Office Director means the Director of the DOE Field Support Office with the responsibility for grant administration or any official to whom that function may be redelegated by the Assistant Secretary.

Total Program Allocations means the annual appropriation less funds reserved for training and technical assistance.

Tribal Organization means the recognized governing body of any Indian tribe or any legally established organization of Native Americans which is controlled, sanctioned, or chartered by such governing body.

Unit of General Purpose Local Government means any city, county, town, parish, village, or other general purpose political subdivision of a State.

Vestibule means an enclosure built around a primary entry to a dwelling unit.

Weatherization Materials mean:

(1) Caulking and weatherstripping of doors and windows;

(2) Furnace efficiency modifications including, but not limited to—

(i) Replacement burners, furnaces, or boilers or any combination thereof;

(ii) Devices for minimizing energy loss through heating system, chimney, or venting devices; and

(iii) Electrical or mechanical furnace ignition systems which replace standing gas pilot lights;

(3) Cooling efficiency modifications including, but not limited to—

(i) Replacement air conditioners;

(ii) Ventilation equipment;

(iii) Screening and window films; and

(iv) Shading devices.

Weatherization Project means a project conducted in a single geographical area which undertakes to weatherize dwelling units that are energy inefficient.

[49 FR 3629, Jan. 27, 1984, as amended at 50 FR 712, Jan. 4, 1985; 50 FR 49917, Dec. 5, 1985; 55 FR 41325, Oct. 10, 1990; 58 FR 12525, Mar. 4, 1993; 60 FR 29480, June 5, 1995; 65 FR 77217, Dec. 8, 2000; 71 FR 35778, June 22, 2006; 74 FR 12539, Mar. 25, 2009]

§ 440.10 Allocation of funds.

(a) DOE shall allocate financial assistance for each State from sums appropriated for any fiscal year, upon annual application.

(b) Based on total program allocations at or above the amount of $209,724,761, DOE shall determine the program allocation for each State from available funds as follows:

(1) Allocate to each State a ''Base Allocation'' as listed in Table 1.

BASE ALLOCATION TABLE

Alabama	$1,636,000

BASE ALLOCATION TABLE—Continued

Alaska	1,425,000
Arizona	760,000
Arkansas	1,417,000
California	4,404,000
Colorado	4,574,000
Connecticut	1,887,000
Delaware	409,000
District of Columbia	487,000
Florida	761,000
Georgia	1,844,000
Hawaii	120,000
Idaho	1,618,000
Illinois	10,717,000
Indiana	5,156,000
Iowa	4,032,000
Kansas	1,925,000
Kentucky	3,615,000
Louisiana	912,000
Maine	2,493,000
Maryland	1,963,000
Massachusetts	5,111,000
Michigan	12,346,000
Minnesota	8,342,000
Mississippi	1,094,000
Missouri	4,615,000
Montana	2,123,000
Nebraska	2,013,000
Nevada	586,000
New Hampshire	1,193,000
New Jersey	3,775,000
New Mexico	1,519,000
New York	15,302,000
North Carolina	2,853,000
North Dakota	2,105,000
Ohio	10,665,000
Oklahoma	1,846,000
Oregon	2,320,000
Pennsylvania	11,457,000
Rhode Island	878,000
South Carolina	1,130,000
South Dakota	1,561,000
Tennessee	3,218,000
Texas	2,999,000
Utah	1,692,000
Vermont	1,014,000
Virginia	2,970,000
Washington	3,775,000
West Virginia	2,573,000
Wisconsin	7,061,000
Wyoming	967,000
American Samoa	120,000
Guam	120,000
Puerto Rico	120,000
Northern Mariana Islands	120,000
Virgin Islands	120,000
Total	171,858,000

(2) Subtract 171,258,000 from total program allocations.

(3) Calculate each State's formula share as follows:

(i) Divide the number of ''Low Income'' households in each State by the number of ''Low Income'' households in the United States and multiply by 100.

(ii) Divide the number of ''Heating Degree Days'' for each State by the median ''Heating Degree Days'' for all States.

(iii) Divide the number of ''Cooling Degree Days'' for each State by the median ''Cooling Degree Days'' for all States, then multiply by 0.1.

(iv) Calculate the sum of the two numbers from paragraph (b)(3)(ii) and (iii) of this section.

(v) Divide the residential energy expenditures for each State by the number of households in the State.

(vi) Divide the sum of the residential energy expenditures for the States in each Census division by the sum of the households for the States in that division.

(vii) Divide the quotient from paragraph (b)(3)(v) of this section by the quotient from paragraph (b)(3)(vi) of this section.

(viii) Multiply the quotient from paragraph (b)(3)(vii) of this section for each State by the residential energy expenditures per low-income household for its respective Census division.

(ix) Divide the product from paragraph (b)(3)(viii) of this section for each State by the median of the products of all States.

(x) Multiply the results for paragraph (b)(3)(i), (iv) and (ix) of this section for each State.

(xi) Divide the product in paragraph (b)(3)(x) of this section for each State by the sum of the products in paragraph (b)(3)(x) of this section for all States.

(4) Calculate each State's program allocation as follows:

(i) Multiply the remaining funds calculated in paragraph (b)(2) of this section by the formula share calculated in paragraph (b)(3)(xi) of this section,

(ii) Add the base allocation from paragraph (b)(1) of this section to the product of paragraph (b)(4)(i) of this section.

(c) Should total program allocations for any fiscal year fall below $209,724,761, then each State's program allocation shall be reduced from its allocated amount under a total program allocation of $209,724,761 by the same percentage as total program allocations for the fiscal year fall below $209,724,761.

(d) All data sources used in the development of the formula are publicly available. The relevant data is available from the Bureau of the Census, the

Department of Energy's Energy Information Administration and the National Oceanic and Atmospheric Administration.

(e) Should updates to the data used in the formula become available in any fiscal year, these changes would be implemented in the formula in the following program year.

(f) DOE may reduce the program allocation for a State by the amount DOE determines cannot be reasonably expended by a grantee to weatherize dwelling units during the budget period for which financial assistance is to be awarded. In reaching this determination, DOE will consider the amount of unexpended financial assistance currently available to a grantee under this part and the number of dwelling units which remains to be weatherized with the unexpended financial assistance.

(g) DOE may increase the program allocation of a State by the amount DOE determines the grantee can expend to weatherize additional dwelling units during the budget period for which financial assistance is to be awarded.

(h) The Support Office Director shall notify each State of the program allocation for which that State is eligible to apply.

[60 FR 29480, June 5, 1995, as amended at 74 FR 12539, Mar. 25, 2009]

§ 440.11 Native Americans.

(a) Notwithstanding any other provision of this part, the Support Office Director may determine, after taking into account the amount of funds made available to a State to carry out the purposes of this part, that:

(1) The low-income members of an Indian tribe are not receiving benefits under this part equivalent to the assistance provided to other low-income persons in the State under this part and

(2) The low-income members of such tribe would be better served by means of a grant made directly to provide such assistance.

(b) In any State for which the Support Office Director shall have made the determination referred to in paragraph (a) of this section, the Support Office Director shall reserve from the sums that would otherwise be allocated to the State under this part not less than 100 percent, or more than 150 percent, of an amount which bears the same ratio to the State's allocation for the fiscal year involved as the population of all low-income Native Americans for whom a determination under paragraph (a) of this section has been made bears to the population of all low-income persons in the State.

(c) The Support Office Director shall make the determination prescribed in paragraph (a) of this section in the event a State:

(1) Does not apply within the sixty-day time period prescribed in § 440.12(a);

(2) Recommends that direct grants be made for low-income members of an Indian tribe as provided in § 440.12(b)(5);

(3) Files an application which DOE determines, in accordance with the procedures in § 440.30, not to make adequate provision for the low-income members of an Indian tribe residing in the State; or

(4) Has received grant funds and DOE determines, in accordance with the procedures in § 440.30, that the State has failed to implement the procedures required by § 440.16(6).

(d) Any sums reserved by the Support Office Director pursuant to paragraph (b) of this section shall be granted to the tribal organization serving the individuals for whom the determination has been made, or where there is no tribal organization, to such other entity as the Support Office Director determines is able to provide adequate weatherization assistance pursuant to this part. Where the Support Office Director intends to make a grant to an organization to perform services benefiting more than one Indian tribe, the approval of each Indian tribe shall be a prerequisite for the issuance of a notice of grant award.

(e) Within 30 days after the Support Office Director has reserved funds pursuant to paragraph (b) of this section, the Support Office Director shall give written notice to the tribal organization or other qualified entity of the amount of funds reserved and its eligibility to apply therefor.

(f) Such tribal organization or other qualified entity shall thereafter be treated as a unit of general purpose local government eligible to apply for

funds hereunder, pursuant to the provisions of § 440.13.

[49 FR 3629, Jan. 27, 1984, as amended at 58 FR 12529, Mar. 4, 1993]

§ 440.12 State application.

(a) To be eligible for financial assistance under this part, a State shall submit an application to DOE in conformity with the requirements of this part not later than 60 days after the date of notice to apply is received from the Support Office Director. After receipt of an application for financial assistance or for approval of an amendment to a State plan, the Support Office Director may request the State to submit within a reasonable period of time any revisions necessary to make the application complete or to bring the application into compliance with the requirements of this part. The Support Office Director shall attempt to resolve any dispute over the application informally and to seek voluntary compliance. If a State fails to submit timely appropriate revisions to complete the application, the Support Office Director may reject the application as incomplete in a written decision, including a statement of reasons, which shall be subject to administrative review under § 440.30 of this part.

(b) Each application shall include:

(1) The name and address of the State agency or office responsible for administering the program;

(2) A copy of the final State plan prepared after notice and a public hearing in accordance with § 440.14(a), except that an application by a local applicant need not include a copy of the final State plan;

(3) The budget for total funds applied for under the Act, which shall include a justification and explanation of any amounts requested for expenditure pursuant to § 440.18(d) for State administration;

(4) The total number of dwelling units proposed to be weatherized with grant funds during the budget period for which assistance is to be awarded—

(i) With financial assistance previously obligated under this part, and

(ii) With the program allocation to the State;

(5) A recommendation that a tribal organization be treated as a local applicant eligible to submit an application pursuant to § 440.13(b), if such a recommendation is to be made;

(6) A monitoring plan which shall indicate the method used by the State to insure the quality of work and adequate financial management control at the subgrantee level;

(7) A training and technical assistance plan which shall indicate how funds for training and technical assistance will be used; and

(8) Any further information which the Secretary finds necessary to determine whether an application meets the requirements of this part.

(c) On or before 60 days from the date that a timely filed application is complete, the Support Office Director shall decide whether DOE shall approve the application. The Support Office Director may—

(1) Approve the application in whole or in part to the extent that the application conforms to the requirements of this part;

(2) Approve the application in whole or in part subject to special conditions designed to ensure compliance with the requirements of this part; or

(3) Disapprove the application if it does not conform to the requirements of this part.

(Approved by the Office of Management and Budget under control number 1904–0047)

[49 FR 3629, Jan. 27, 1984, as amended at 50 FR 712, Jan. 4, 1985; 55 FR 41325, Oct. 10, 1990; 58 FR 12529, Mar. 4, 1993; 60 FR 29481, June 5, 1995]

§ 440.13 Local applications.

(a) The Support Office Director shall give written notice to all local applicants throughout a State of their eligibility to apply for financial assistance under this part in the event:

(1) A State, within which a local applicant is situated, fails to submit an application within 60 days after notice in accordance with § 440.12(a) or

(2) The Support Office Director finally disapproves the application of a State, and, under § 440.30, either no appeal is filed or the Support Office Director's decision is affirmed.

(b) To be eligible for financial assistance, a local applicant shall submit an application pursuant to § 440.12(b) to the Support Office Director within 30

days after receiving the notice referred to in paragraph (a) of this section.

(c) In the event one or more local applicants submits an application for financial assistance to carry out projects in the same geographical area, the Support Office Director shall hold a public hearing with the same procedures that apply under section § 440.14(a).

(d) Based on the information provided by a local applicant and developed in any hearing held under paragraph (c) of this section, the Support Office Director shall determine in writing whether to award a grant to carry out one or more weatherization projects.

(e) If there is an adverse decision in whole or in part under paragraph (d) of this section, that decision is subject to administrative review under § 440.30 of this part.

(f) If, after a State application has been finally disapproved by DOE and the Support Office Director approves local applications under this section, the Support Office Director may reject a new State application in whole or in part as disruptive and untimely without prejudice to submission of an application for the next program year.

(Approved by the Office of Management and Budget under control number 1904–0047)

[49 FR 3629, Jan. 27, 1984, as amended at 58 FR 12525, 12529, Mar. 4, 1993]

§ 440.14 State plans.

(a) Before submitting to DOE an application, a State must provide at least 10 days notice of a hearing to inform prospective subgrantees, and must conduct one or more public hearings to receive comments on a proposed State plan. The notice for the hearing must specify that copies of the plan are available and state how the public may obtain them. The State must prepare a transcript of the hearings and accept written submission of views and data for the record.

(b) The proposed State plan must:

(1) Identify and describe proposed weatherization projects, including a statement of proposed subgrantees and the amount of funding each will receive;

(2) Address the other items contained in paragraph (c) of this section; and

(3) Be made available throughout the State prior to the hearing.

(c) After the hearing, the State must prepare a final State plan that identifies and describes:

(1) The production schedule for the State indicating projected expenditures and the number of dwelling units, including previously weatherized units which are expected to be weatherized annually during the program year;

(2) The climatic conditions within the State;

(3) The type of weatherization work to be done;

(4) An estimate of the amount of energy to be conserved;

(5) Each area to be served by a weatherization project within the State, and must include for each area:

(i) The tentative allocation;

(ii) The number of dwelling units expected to be weatherized during the program year; and

(iii) Sources of labor.

(6) How the State plan is to be implemented, including:

(i) An analysis of the existence and effectiveness of any weatherization project being carried out by a subgrantee;

(ii) An explanation of the method used to select each area served by a weatherization project;

(iii) The extent to which priority will be given to the weatherization of single-family or other high energy-consuming dwelling units;

(iv) The amount of non-Federal resources to be applied to the program;

(v) The amount of Federal resources, other than DOE weatherization grant funds, to be applied to the program;

(vi) The amount of weatherization grant funds allocated to the State under this part;

(vii) The expected average cost per dwelling to be weatherized, taking into account the total number of dwellings to be weatherized and the total amount of funds, Federal and non-Federal, expected to be applied to the program;

(viii) The average amount of the DOE funds specified in § 440.18(c)(1) through (9) to be applied to any dwelling unit;

(ix) [Reserved]

(x) The procedures used by the State for providing additional administrative

funds to qualified subgrantees as specified in § 440.18(d);

(xi) Procedures for determining the most cost-effective measures in a dwelling unit;

(xii) The definition of ''low-income'' which the State has chosen for determining eligibility for use statewide in accordance with § 440.22(a);

(xiii) The definition of ''children'' which the State has chosen consistent with § 440.3; and

(xiv) The amount of Federal funds and how they will be used to increase the amount of weatherization assistance that the State obtains from non-Federal sources, including private sources, and the expected leveraging effect to be accomplished.

[65 FR 77217, Dec. 8, 2000, as amended at 66 FR 58366, Nov. 21, 2001]

§ 440.15 Subgrantees.

(a) The grantee shall ensure that:

(1) Each subgrantee is a CAA or other public or nonprofit entity;

(2) Each subgrantee is selected on the basis of public comment received during a public hearing conducted pursuant to § 440.14(a) and other appropriate findings regarding:

(i) The subgrantee's experience and performance in weatherization or housing renovation activities;

(ii) The subgrantee's experience in assisting low-income persons in the area to be served; and

(iii) The subgrantee's capacity to undertake a timely and effective weatherization program.

(3) In selecting a subgrantee, preference is given to any CAA or other public or nonprofit entity which has, or is currently administering, an effective program under this part or under title II of the Economic Opportunity Act of 1964, with program effectiveness evaluated by consideration of factors including, but not necessarily limited to, the following:

(i) The extent to which the past or current program achieved or is achieving weatherization goals in a timely fashion;

(ii) The quality of work performed by the subgrantee;

(iii) The number, qualifications, and experience of the staff members of the subgrantee; and

(iv) The ability of the subgrantee to secure volunteers, training participants, public service employment workers, and other Federal or State training programs.

(b) The grantee shall ensure that the funds received under this part will be allocated to the entities selected in accordance with paragraph (a) of this section, such that funds will be allocated to areas on the basis of the relative need for a weatherization project by low-income persons.

(c) If DOE finds that a subgrantee selected to undertake weatherization activities under this part has failed to comply substantially with the provisions of the Act or this part and should be replaced, such finding shall be treated as a finding under § 440.30(i) for purposes of § 440.30.

(d) Any new or additional subgrantee shall be selected at a hearing in accordance with § 440.14(a) and upon the basis of the criteria in paragraph (a) of this section.

(e) A State may terminate financial assistance under a subgrant agreement for a grant period only in accordance with established State procedures that provide to the subgrantee appropriate notice of the State's reasons for termination and afford the subgrantee an adequate opportunity to be heard.

[49 FR 3629, Jan. 27, 1984, as amended at 55 FR 41326, Oct. 10, 1990; 58 FR 12526, Mar. 4, 1993; 65 FR 77218, Dec. 8, 2000]

§ 440.16 Minimum program requirements.

Prior to the expenditure of any grant funds each grantee shall develop, publish, and implement procedures to ensure that:

(a) No dwelling unit may be weatherized without documentation that the dwelling unit is an eligible dwelling unit as provided in § 440.22;

(b) Priority is given to identifying and providing weatherization assistance to:

(1) Elderly persons;

(2) Persons with disabilities;

(3) Families with children;

(4) High residential energy users; and

(5) Households with a high energy burden.

(c) Financial assistance provided under this part will be used to supplement, and not supplant, State or local funds, and, to the maximum extent practicable as determined by DOE, to increase the amounts of these funds that would be made available in the absence of Federal funds provided under this part;

(d) To the maximum extent practicable, the grantee will secure the services of volunteers when such personnel are generally available, training participants and public service employment workers, other Federal or State training program workers, to work under the supervision of qualified supervisors and foremen;

(e) To the maximum extent practicable, the use of weatherization assistance shall be coordinated with other Federal, State, local, or privately funded programs in order to improve energy efficiency and to conserve energy;

(f) The low-income members of an Indian tribe shall receive benefits equivalent to the assistance provided to other low-income persons within a State unless the grantee has made the recommendation provided in § 440.12(b)(5);

(g) No dwelling unit may be reported to DOE as completed until all weatherization materials have been installed and the subgrantee, or its authorized representative, has performed a final inspection(s) including any mechanical work performed and certified that the work has been completed in a workmanlike manner and in accordance with the priority determined by the audit procedures required by § 440.21; and

(h) Subgrantees limit expenditure of funds under this part for installation of materials (other than weatherization materials) to abate energy-related health and safety hazards, to a list of types of such hazards, permissible abatement materials and their costs which is submitted, and updated as necessary at the same time as an annual application under § 440.12 of this part and which DOE shall approve if—

(1) Elimination of such hazards are necessary before, or as a result of, installation of weatherization materials; and

(2) The grantee sets forth a limitation on the percent of average dwelling unit costs which may be used to abate such hazards which is reasonable in light of the primary energy conservation purpose of this part;

(i) The benefits of weatherization to occupants of rental units are protected in accordance with § 440.22(b)(3) of this part.

(Approved by the Office of Management and Budget under control number 1904–0047)

[49 FR 3629, Jan. 27, 1984, as amended at 58 FR 12526, Mar. 4, 1993; 65 FR 77218, Dec. 8, 2000]

§ 440.17 Policy Advisory Council.

(a) Prior to the expenditure of any grant funds, a State policy advisory council, or a State commission or council which serves the same functions as a State policy advisory council, must be established by a State or by the Regional Office Director if a State does not participate in the Program which:

(1) Has special qualifications and sensitivity with respect to solving the problems of low-income persons, including the weatherization and energy conservation problems of these persons;

(2) Is broadly representative of organizations and agencies, including consumer groups that represent low-income persons, particularly elderly and handicapped low-income persons and low-income Native Americans, in the State or geographical area in question; and

(3) Has responsibility for advising the appropriate official or agency administering the allocation of financial assistance in the State or area with respect to the development and implementation of a weatherization assistance program.

(b) Any person employed in any State Weatherization Program may also be a member of an existing commission or council, but must abstain from reviewing and approving activities associated with the DOE Weatherization Assistance Program.

(c) States which opt to utilize an existing commission or council must certify to DOE, as a part of the annual application, of the council's or commission's independence in reviewing and

approving activities associated with the DOE Weatherization Assistance Program.

[49 FR 3629, Jan. 27, 1984, as amended at 58 FR 12529, Mar. 4, 1993; 65 FR 77218, Dec. 8, 2000]

§ 440.18 Allowable expenditures.

(a) Except as adjusted, the expenditure of financial assistance provided under this part for labor, weatherization materials, and related matters included in paragraphs (c)(1) through (9) of this section shall not exceed an average of $6,500 per dwelling unit weatherized in the State, except as adjusted in paragraph (c) of this section.

(b) The expenditure of financial assistance provided under this part for labor, weatherization materials, and related matters for a renewable energy system, shall not exceed an average of $3,000 per dwelling unit.

(c) The $6,500 average will be adjusted annually by DOE beginning in calendar year 2010 and the $3,000 average for renewable energy systems will be adjusted annually by DOE beginning in calendar year 2007, by increasing the limitations by an amount equal to:

(1) The limitation amount for the previous year, multiplied by

(2) The lesser of:

(i) The percentage increase in the Consumer Price Index (all items, United States city average) for the most recent calendar year completed before the beginning of the year for which the determination is being made, or

(ii) Three percent.

(3) For the purposes of determining the average cost per dwelling limitation, costs for the purchase of vehicles or other certain types of equipment as defined in 10 CFR part 600 may be amortized over the useful life of the vehicle or equipment.

(d) Allowable expenditures under this part include only:

(1) The cost of purchase and delivery of weatherization materials;

(2) Labor costs, in accordance with § 440.19;

(3) Transportation of weatherization materials, tools, equipment, and work crews to a storage site and to the site of weatherization work;

(4) Maintenance, operation, and insurance of vehicles used to transport weatherization materials;

(5) Maintenance of tools and equipment;

(6) The cost of purchasing vehicles, except that any purchase of vehicles must be referred to DOE for prior approval in every instance.

(7) Employment of on-site supervisory personnel;

(8) Storage of weatherization materials, tools, and equipment;

(9) The cost of incidental repairs if such repairs are necessary to make the installation of weatherization materials effective;

(10) The cost of liability insurance for weatherization projects for personal injury and for property damage;

(11) The cost of carrying out low-cost/no-cost weatherization activities in accordance with § 440.20;

(12) The cost of weatherization program financial audits as required by § 440.23(d);

(13) Allowable administrative expenses under paragraph (d) of this section; and

(14) Funds used for leveraging activities in accordance with § 440.14(b)(9)(xiv); and

(15) The cost of eliminating health and safety hazards elimination of which is necessary before, or because of, installation of weatherization materials.

(e) Not more than 10 percent of any grant made to a State may be used by the grantee and subgrantees for administrative purposes in carrying out duties under this part, except that not more than 5 percent may be used by the State for such purposes, and not less than 5 percent must be made available to subgrantees by States. A State may provide in its annual plan for recipients of grants of less than $350,000 to use up to an additional 5 percent of such grants for administration if the State has determined that such recipient requires such additional amount to implement effectively the administrative requirements established by DOE pursuant to this part.

(f) No grant funds awarded under this part shall be used for any of the following purposes:

(1) To weatherize a dwelling unit which is designated for acquisition or clearance by a Federal, State, or local program within 12 months from the date weatherization of the dwelling unit would be scheduled to be completed; or

(2) To install or otherwise provide weatherization materials for a dwelling unit weatherized previously with grant funds under this part, except:

(i) As provided under § 440.20;

(ii) If such dwelling unit has been damaged by fire, flood, or act of God and repair of the damage to weatherization materials is not paid for by insurance; or

(iii) That dwelling units partially weatherized under this part or under other Federal programs during the period September 30, 1975, through September 30, 1993, may receive further financial assistance for weatherization under this part. While DOE will continue to require these homes to be reported separately, States may count these homes as completions for the purposes of compliance with the per-home expenditure limit in § 440.18. Each dwelling unit must receive a new energy audit which takes into account any previous energy conservation improvements to the dwelling.

[58 FR 12526, Mar. 4, 1993, as amended at 65 FR 77218, Dec. 8, 2000; 66 FR 58366, Nov. 21, 2001; 71 FR 35778, June 22, 2006; 74 FR 12540, Mar. 25, 2009]

§ 440.19 Labor.

Payments for labor costs under § 440.18(c)(2) must consist of:

(a) Payments permitted by the Department of Labor to supplement wages paid to training participants, public service employment workers, or other Federal or State training programs; and

(b) Payments to employ labor or to engage a contractor (particularly a nonprofit organization or a business owned by disadvantaged individuals which performs weatherization services), provided a grantee has determined an adequate number of volunteers, training participants, public service employment workers, or other Federal or State training programs are not available to weatherize dwelling units for a subgrantee under the supervision of qualified supervisors.

[65 FR 77218, Dec. 8, 2000]

§ 440.20 Low-cost/no-cost weatherization activities.

(a) An eligible dwelling unit may be weatherized without regard to the limitations contained in § 440.18 (e)(2) or § 440.21(b) from funds designated by the grantee for carrying out low-cost/no-cost weatherization activities provided:

(1) Inexpensive weatherization materials are used, such as water flow controllers, furnace or cooling filters, or items which are primarily directed toward reducing infiltration, including weatherstripping, caulking, glass patching, and insulation for plugging and

(2) No labor paid with funds provided under this part is used to install weatherization materials referred to in paragraph (a)(1) of this section.

(b) A maximum of 10 percent of the amount allocated to a subgrantee, not to exceed $50 in materials costs per dwelling unit, may be expended to carry out low-cost/no-cost weatherization activities, unless the Support Office Director approves a higher expenditure per dwelling unit.

[49 FR 3629, Jan. 27, 1984, as amended at 50 FR 713, Jan. 4, 1985; 58 FR 12529, Mar. 4, 1993]

§ 440.21 Weatherization materials standards and energy audit procedures.

(a) Paragraph (b) of this section describes the required standards for weatherization materials. Paragraph (c)(1) of this section describes the performance and quality standards for renewable energy systems. Paragraph (c)(2) of this section specifies the procedures and criteria that are used for considering a petition from a manufacturer requesting the Secretary to certify an item as a renewable energy system. Paragraphs (d) and (e) of this section describe the cost-effectiveness tests that weatherization materials must pass before they may be installed in an eligible dwelling unit. Paragraph (f) of this section lists the other energy audit requirements that do not pertain to cost-effectiveness tests of weatherization materials. Paragraphs (g) and

(h) of this section describe the use of priority lists and presumptively cost-effective general heat waste reduction materials as part of a State's energy audit procedures. Paragraph (i) of this section explains that a State's energy audit procedures and priority lists must be re-approved by DOE every five years.

(b) Only weatherization materials which are listed in appendix A to this part and which meet or exceed standards prescribed in appendix A to this part may be purchased with funds provided under this part. However, DOE may approve an unlisted material upon application from any State.

(c)(1) A system or technology shall not be considered by DOE to be a renewable energy system under this part unless:

(i) It will result in a reduction in oil or natural gas consumption;

(ii) It will not result in an increased use of any item which is known to be, or reasonably expected to be, environmentally hazardous or a threat to public health or safety;

(iii) Available Federal subsidies do not make such a specification unnecessary or inappropriate (in light of the most advantageous allocation of economic resources); and

(iv) If a combustion rated system, it has a thermal efficiency rating of at least 75 percent; or, in the case of a solar system, it has a thermal efficiency rating of at least 15 percent.

(2) Any manufacturer may submit a petition to DOE requesting the Secretary to certify an item as a renewable energy system.

(i) Petitions should be submitted to: Weatherization Assistance Program, Office of Energy Efficiency and Renewable, Mail Stop EE–2K, 1000 Independence Avenue, SW., Washington, DC 20585.

(ii) A petition for certification of an item as a renewable energy system must be accompanied by information demonstrating that the item meets the criteria in paragraph (c)(1) of this section.

(iii) DOE may publish a document in the FEDERAL REGISTER that invites public comment on a petition.

(iv) DOE shall notify the petitioner of the Secretary's action on the request within one year after the filing of a complete petition, and shall publish notice of approvals and denials in the FEDERAL REGISTER.

(d) Except for materials to eliminate health and safety hazards allowable under § 440.18(c)(15), each individual weatherization material and package of weatherization materials installed in an eligible dwelling unit must be cost-effective. These materials must result in energy cost savings over the lifetime of the measure(s), discounted to present value, that equal or exceed the cost of materials, installation, and on-site supervisory personnel as defined by the Department. States have the option of requiring additional related costs to be included in the determination of cost-effectiveness. The cost of incidental repairs must be included in the cost of the package of measures installed in a dwelling.

(e) The energy audit procedures must assign priorities among individual weatherization materials in descending order of their cost-effectiveness according to paragraph (d) of this section after:

(1) Adjusting for interaction between architectural and mechanical weatherization materials by using generally accepted engineering methods to decrease the estimated fuel cost savings for a lower priority weatherization material in light of fuel cost savings for a related higher priority weatherization material; and

(2) Eliminating any weatherization materials that are no longer cost-effective, as adjusted under paragraph (e)(1) of this section.

(f) The energy audit procedures also must—

(1) Compute the cost of fuel saved per year by taking into account the climatic data of the area where the dwelling unit is located, where the base temperature that determines the number of heating or cooling degree days (if used) reasonably approximates conditions when operation of heating and cooling equipment is required to maintain comfort, and must otherwise use reasonable energy estimating methods and assumptions;

(2) Determine existing energy use and energy requirements of the dwelling

unit from actual energy bills or by generally accepted engineering calculations;

(3) Address significant heating and cooling needs;

(4) Make provision for the use of advanced diagnostic and assessment techniques which DOE has determined are consistent with sound engineering practices;

(5) Identify health and safety hazards to be abated with DOE funds in compliance with the State's DOE-approved health and safety procedures under § 440.16(h);

(6) Treat the dwelling unit as a whole system by examining its heating and cooling system, its air exchange system, and its occupants' living habits and needs, and making necessary adjustments to the priority of weatherization materials with adequate documentation of the reasons for such an adjustment; and

(7) Be specifically approved by DOE for use on each major dwelling type that represents a significant portion of the State's weatherization program in light of the varying energy audit requirements of different dwelling types including single-family dwellings, multi-family buildings, and mobile homes.

(g) For similar dwelling units without unusual energy-consuming characteristics, energy audits may be accomplished by using a priority list developed by conducting, in compliance with paragraphs (b) through (f) of this section, site-specific energy audits of a representative subset of these dwelling units. For DOE approval, States must describe how the priority list was developed, how the subset of similar homes was determined, and circumstances that will require site-specific audits rather than the use of the priority lists. States also must provide the input data and list of weatherization measures recommended by the energy audit software or manual methods for several dwelling units from the subset of similar units.

(h) States may use, as a part of an energy audit, general heat waste reduction weatherization materials that DOE has determined to be generally cost-effective. States may request approval to use general heat waste materials not listed in DOE policy guidance by providing documentation of their cost-effectiveness and a description of the circumstances under which such materials will be used.

(i) States must resubmit their energy audit procedures (and priority lists, if applicable, under certain conditions) to DOE for approval every five years. States must also resubmit to DOE, for approval every five years, their list of general heat waste materials in addition to those approved by DOE in policy guidance, if applicable. Policy guidance will describe the information States must submit to DOE and the circumstances that reduce or increase documentation requirements.

[65 FR 77218, Dec. 8, 2000, as amended at 71 FR 35778, June 22, 2006]

§ 440.22 Eligible dwelling units.

(a) A dwelling unit shall be eligible for weatherization assistance under this part if it is occupied by a family unit:

(1) Whose income is at or below 200 percent of the poverty level determined in accordance with criteria established by the Director of the Office of Management and Budget,

(2) Which contains a member who has received cash assistance payments under Title IV or XVI of the Social Security Act or applicable State or local law at any time during the 12-month period preceding the determination of eligibility for weatherization assistance; or

(3) If the State elects, is eligible for assistance under the Low-Income Home Energy Assistance Act of 1981, provided that such basis is at least 200 percent of the poverty level determined in accordance with criteria established by the Director of the Office of Management and Budget.

(b) A subgrantee may weatherize a building containing rental dwelling units using financial assistance for dwelling units eligible for weatherization assistance under paragraph (a) of this section, where:

(1) The subgrantee has obtained the written permission of the owner or his agent;

(2) Not less than 66 percent (50 percent for duplexes and four-unit buildings, and certain eligible types of large

multi-family buildings) of the dwelling units in the building:

(i) Are eligible dwelling units, or

(ii) Will become eligible dwelling units within 180 days under a Federal, State, or local government program for rehabilitating the building or making similar improvements to the building; and

(3) The grantee has established procedures for dwellings which consist of a rental unit or rental units to ensure that:

(i) The benefits of weatherization assistance in connection with such rental units, including units where the tenants pay for their energy through their rent, will accrue primarily to the low-income tenants residing in such units;

(ii) For a reasonable period of time after weatherization work has been completed on a dwelling containing a unit occupied by an eligible household, the tenants in that unit (including households paying for their energy through their rent) will not be subjected to rent increases unless those increases are demonstrably related to matters other than the weatherization work performed;

(iii) The enforcement of paragraph (b)(3)(ii) of this section is provided through procedures established by the State by which tenants may file complaints, and owners, in response to such complaints, shall demonstrate that the rent increase concerned is related to matters other than the weatherization work performed; and

(iv) No undue or excessive enhancement shall occur to the value of the dwelling units.

(4)(i) A building containing rental dwelling units meets the requirements of paragraph (b)(2), and paragraphs (b)(3)(ii) and (b)(3)(iv), of this section if it is included on the most recent list posted by DOE of Assisted Housing and Public Housing buildings identified by the U.S. Department of Housing and Urban Development as meeting those requirements.

(ii) A building containing rental dwelling units meets the requirements of paragraph (b)(2), and paragraph (b)(3)(iv), of this section if it is included on the most recent list posted by DOE of Assisted Housing and Public Housing buildings identified by the U.S. Department of Housing and Urban Development as meeting those requirements.

(iii) A building containing rental dwelling units meets the requirement of paragraph (b)(2) of this section if it is included on the most recent list posted by DOE of Low Income Housing Tax Credit buildings identified by the U.S. Department of Housing and Urban Development as meeting that requirement and of Rural Housing Service Multifamily Housing buildings identified by the U.S. Department of Agriculture as meeting that requirement.

(iv) For buildings identified under paragraphs (b)(4)(i), (ii) and (iii) of this section, States will continue to be responsible for ensuring compliance with the remaining requirements of this section, and States shall establish requirements and procedures to ensure such compliance in accordance with this section.

(c) In order to secure the Federal investment made under this part and address the issues of eviction from and sale of property receiving weatherization materials under this part, States may seek landlord agreement to placement of a lien or to other contractual restrictions;

(d) As a condition of having assistance provided under this part with respect to multifamily buildings, a State may require financial participation, when feasible, from the owners of such buildings. Such financial participation shall not be reported as program income, nor will it be treated as if it were appropriated funds. The funds contributed by the landlord shall be expended in accordance with the agreement between the landlord and the weatherization agency.

(e) In devising procedures under paragraph (b)(3)(iii) of this section, States should consider requiring use of alternative dispute resolution procedures including arbitration.

(f) A State may weatherize shelters. For the purpose of determining how many dwelling units exist in a shelter, a grantee may count each 800 square feet of the shelter as a dwelling unit or

it may count each floor of the shelter as a dwelling unit.

[58 FR 12528, Mar. 4, 1993, as amended at 65 FR 77219, Dec. 8, 2000; 74 FR 12540, Mar. 25, 2009; 75 FR 3856, Jan. 25, 2010]

§ 440.23 Oversight, training, and technical assistance.

(a) The Secretary and the appropriate Support Office Director, in coordination with the Secretary of Health and Human Services, shall monitor and evaluate the operation of projects carried out by CAA's receiving financial assistance under this part through on-site inspections, or through other means, in order to ensure the effective provision of weatherization assistance for the dwelling units of low-income persons.

(b) DOE shall also carry out periodic evaluations of a program and weatherization projects that are not carried out by a CAA and that are receiving financial assistance under this part.

(c) The Secretary and the appropriate Support Office Director, the Comptroller General of the United States, and for a weatherization project carried out by a CAA, the Secretary of Health and Human Services or any of their duly authorized representatives, shall have access to any books, documents, papers, information, and records of any weatherization project receiving financial assistance under the Act for the purpose of audit and examination.

(d) Each grantee shall ensure that audits by or on behalf of subgrantees are conducted with reasonable frequency, on a continuing basis, or at scheduled intervals, usually annually, but not less frequently than every two years, in accordance with 10 CFR part 600, and OMB Circular 110, Attachment F, as applicable.

(e) The Secretary may reserve from the funds appropriated for any fiscal year an amount not to exceed 20 percent to provide, directly or indirectly, training and technical assistance to any grantee or subgrantee. Such training and technical assistance may include providing information concerning conservation practices to occupants of eligible dwelling units.

[49 FR 3629, Jan. 27, 1984, as amended at 58 FR 12529, Mar. 4, 1993; 74 FR 12540, Mar. 25, 2009]

§ 440.24 Recordkeeping.

Each grantee or subgrantee receiving Federal financial assistance under this part shall keep such records as DOE shall require, including records which fully disclose the amount and disposition by each grantee and subgrantee of the funds received, the total cost of a weatherization project or the total expenditure to implement the State plan for which assistance was given or used, the source and amount of funds for such project or program not supplied by DOE, the average costs incurred in weatherization of individual dwelling units, the average size of the dwelling being weatherized, the average income of households receiving assistance under this part, and such other records as DOE deems necessary for an effective audit and performance evaluation. Such recordkeeping shall be in accordance with the DOE Financial Assistance Rule, 10 CFR part 600, and any further requirements of this part.

[58 FR 12529, Mar. 4, 1993]

§ 440.25 Reports.

DOE may require any recipient of financial assistance under this part to provide, in such form as may be prescribed, such reports or answers in writing to specific questions, surveys, or questionnaires as DOE determines to be necessary to carry out its responsibilities or the responsibilities of the Secretary of Health and Human Services under this part.

(Approved by the Office of Management and Budget under control number 1901–0127)

§§ 440.26–440.29 [Reserved]

§ 440.30 Administrative review.

(a) An applicant shall have 20 days from the date of receipt of a decision under § 440.12 or § 440.13 to file a notice requesting administrative review. If an applicant does not timely file such a notice, the decision under § 440.12 or § 440.13 shall become final for DOE.

(b) A notice requesting administrative review shall be filed with the Support Office Director and shall be accompanied by a written statement containing supporting arguments and requesting, if desired, the opportunity for a public hearing.

(c) A notice or any other document shall be deemed filed under this section upon receipt.

(d) On or before 15 days from receipt of a notice requesting administrative review which is timely filed, the Support Office Director shall forward to the Deputy Assistant Secretary, the notice requesting administrative review, the decision under §440.12 or §440.13 as to which administrative review is sought, a draft recommended final decision for the concurrence of the Deputy Assistant Secretary, and any other relevant material.

(e) If the applicant requests a public hearing, the Deputy Assistant Secretary, within 15 days, shall give actual notice to the State and FEDERAL REGISTER notice of the date, place, time, and procedures which shall apply to the public hearing. Any public hearing under this section shall be informal and legislative in nature.

(f) On or before 45 days from receipt of documents under paragraph (d) of this section or the conclusion of the public hearing, whichever is later, the Deputy Assistant Secretary shall concur in, concur in as modified, or issue a substitute for the recommended decision of the Support Office Director.

(g) On or before 15 days from the date of receipt of the determination under paragraph (f) of this section, the Governor may file an application, with a supporting statement of reasons, for discretionary review by the Assistant Secretary. On or before 15 days from filing, the Assistant Secretary shall send a notice to the Governor stating whether the Deputy Assistant Secretary's determination will be reviewed. If the Assistant Secretary grants review, a decision shall be issued no later than 60 days from the date review is granted. The Assistant Secretary may not issue a notice or decision under this paragraph without the concurrence of the DOE Office of General Counsel.

(h) A decision under paragraph (f) of this section shall be final for DOE if there is no review under paragraph (g) of this section. If there is review under paragraph (g) of this section, the decision thereunder shall be final for DOE, and no appeal shall lie elsewhere in DOE.

(i) Prior to the effective date of the termination of eligibility for further participation in the program because of failure to comply substantially with the requirements of the Act or of this part, a grantee shall have the right to written notice of the basis for the enforcement action and the opportunity for a public hearing notwithstanding any provisions to contrary of 10 CFR 600.26, 600.28(b), 600.29, 600.121(c), and 600.443. A notice under this paragraph shall be mailed by the Support Office Director by registered mail, return-receipt requested, to the State, local grantee, and other interested parties. To obtain a public hearing, the grantee must request an evidentiary hearing, with prior FEDERAL REGISTER notice, in the election letter submitted under Rule 2 of 10 CFR 1024.4 and the request shall be granted notwithstanding any provisions of Rule 2 to the contrary.

[55 FR 41326, Oct. 10, 1990, as amended at 58 FR 12529, Mar. 4, 1993]

APPENDIX A TO PART 440—STANDARDS FOR WEATHERIZATION MATERIALS

The following Government standards are produced by the Consumer Product Safety Commission and are published in title 16, Code of Federal Regulations:

Thermal Insulating Materials for Building Elements Including Walls, Floors, Ceilings, Attics, and Roofs Insulation—organic fiber—conformance to Interim Safety Standard in 16 CFR part 1209;

Fire Safety Requirements for Thermal Insulating Materials According to Insulation Use—Attic Floor—insulation materials intended for exposed use in attic floors shall be capable of meeting the same flammability requirements given for cellulose insulation in 16 CFR part 1209;

Enclosed spaces—insulation materials intended for use within enclosed stud or joist spaces shall be capable of meeting the smoldering combustion requirements in 16 CFR part 1209.

The following standards which are not otherwise set forth in part 440 are incorporated by reference and made a part of part 440. The following standards have been approved for

incorporation by reference by the Director of the Federal Register in accordance with 5 U.S.C. 552(a) and 1 CFR part 51. These materials are incorporated as they exist on April 5, 1993 and a notice of any change in these materials will be published in the FEDERAL REGISTER. The standards incorporated by reference are available for inspection at the National Archives and Records Administration (NARA). For information on the availability of this material at NARA, call 202–741–6030, or go to: *http://www.archives.gov/federal_register/code_of_federal_regulations/ibr_locations.html*.

The standards incorporated by reference in part 440 can be obtained from the following sources:

Air Conditioning and Refrigeration Institute, 1501 Wilson Blvd., Arlington, VA 22209; (703) 524–8800.

American Gas Association, 1515 Wilson Blvd., Arlington, VA 22209; (703) 841–8400.

American National Standards Institute, Inc., 1430 Broadway, New York, NY 10018; (212) 642–4900.

American Society of Mechanical Engineers, United Engineering Center, 345 East 47th Street, New York, NY 10017; (212) 705–7800.

American Society for Testing and Materials, 1916 Race Street, Philadelphia, PA 19103; (215) 299–5400.

American Architectural Manufacturers Association, 1540 East Dundee Road, Palatine, IL 60067; (708) 202–1350.

Federal Specifications, General Services Administration, Specifications Section, Room 6654, 7th and D Streets, SW, Washington, DC 20407; (202) 708–5082.

Gas Appliance Manufacturers Association, 1901 Moore St., Arlington, VA 22209; (703) 525–9565.

National Electrical Manufacturers Association, 2101 L Street, NW, Suite 300, Washington, DC 20037; (202) 457–8400.

National Fire Protection Association, Batterymarch Park, P.O. Box 9101, Quincy, MA 02269; (617) 770–3000.

National Standards Association, 1200 Quince Orchard Blvd., Gaithersburg, MD 20878; (301) 590–2300. (NSA is a local contact for materials from ASTM).

National Wood Window and Door Association, 1400 East Touhy Avenue, Des Plaines, IL 60018; (708) 299–5200.

Sheet Metal and Air Conditioning Contractors Association, P.O. Box 221230, Chantilly, VA 22022–1230; (703) 803–2980.

Steel Door Institute, 712 Lakewood Center North, 14600 Detroit Avenue, Cleveland, OH 44107; (216) 899–0100.

Steel Window Institute, 1230 Keith Building, Cleveland, OH 44115; (216) 241–7333.

Tubular Exchanger Manufacturers Association, 25 North Broadway, Tarrytown, NY 10591; (914) 332–0040.

Underwriters Laboratories, Inc., P.O. Box 75530, Chicago, IL 60675–5330; (708) 272–8800.

More information regarding the standards in this reference can be obtained from the following sources:

Environmental Protection Agency, 401 M Street, NW, Washington, DC 20006; (202) 554–1080.

National Institute of Standards and Technology, U.S. Department of Commerce, Gaithersburg, MD 20899, (301) 975–2000

Weatherization Assistance Programs Division, Conservation and Renewable Energy, Mail Stop 5G–023, Forrestal Bldg, 1000 Independence Ave, SW, Washington, DC 20585; (202) 586–2207.

THERMAL INSULATING MATERIALS FOR BUILDING ELEMENTS INCLUDING WALLS, FLOORS, CEILINGS, ATTICS, AND ROOFS

[Standards for conformance]

Insulation—mineral fiber:	
Blanket insulation	ASTM [1] C665–88.
Roof insulation board	ASTM C726–88.
Loose-fill insulation	ASTM C764–88.
Insulation—mineral cellular:	
Vermiculite loose-fill insulation	ASTM C516–80 (1990).
Perlite loose-fill insulation	ASTM C549–81 (1986).
Cellular glass insulation block	ASTM C552–88.
Perlite insulation board	ASTM C728–89a.
Insulation—organic fiber:	
Cellulosic fiber insulating board	ASTM C208–72 (1982).
Cellulose loose-fill insulation	ASTM C739–88.
Insulation-organic cellular:	
Preformed block-type polystyrene insulation	ASTM C578–87a.
Rigid preformed polyurethane insulation board	ASTM C591–85.
Polyurethane or polyisocyanurate insulation board faced with aluminum foil on both sides	FS [2] HH-I–1972/1 (1981).
Polyurethane or polyisocyanurate insulation board faced with felt on both sides	FS HH-I–1972/2 (1981). And Amendment 1, October 3, 1985.
Insulation—composite boards:	
Mineral fiber and rigid cellular polyurethane composite roof insulation board	ASTM C726–88.
Perlite board and rigid cellular polyurethane composite roof insulation	ASTM C984–83.
Gypsum board and polyurethane or polisocyanurate composite board	FS HH–I–1972/4 (1981).

THERMAL INSULATING MATERIALS FOR BUILDING ELEMENTS INCLUDING WALLS, FLOORS, CEILINGS, ATTICS, AND ROOFS—Continued

[Standards for conformance]

Materials used as a patch to reduce infiltration through the building envelope	Commercially available.

[1] ASTM indicates American Society for Testing and Materials.
[2] FS indicates Federal Specifications.

THERMAL INSULATING MATERIALS FOR PIPES, DUCTS, AND EQUIPMENT SUCH AS BOILERS AND FURNACES

[Standards for conformance]

Insulation—mineral fiber:	
Preformed pipe insulation	ASTM [1] C547–77.
Blanket and felt insulation (industrial type)	ASTM C553–70 (1977).
Blanket insulation and blanket type pipe insulation (metal-mesh covered) (industrial type).	ASTM C592–80.
Block and board insulation	ASTM C612–83.
Spray applied fibrous insulation for elevated temperature	ASTM C720–89.
High-temperature fiber blanket insulation	ASTM C892–89.
Duct work insulation	Selected and applied according to ASTM C971–82.
Insulation—mineral cellular:	
Diatomaceous earth block and pipe insulation	ASTM C517–71 (1979)
Calcium silicate block and pipe insulation	ASTM C533–85 (1990).
Cellular glass insulation	ASTM C552–88.
Expanded perlite block and pipe insulation	ASTM C610–85.
Insulation—Organic Cellular:	
Preformed flexible elastomeric cellular insulation in sheet and tubular form.	ASTM C534–88.
Unfaced preformed rigid cellular polyurethane insulation	ASTM C591–85.
Insulation skirting	Commercially available.

[1] ASTM indicates American Society for Testing and Materials.

FIRE SAFETY REQUIREMENTS FOR INSULATING MATERIALS ACCORDING TO INSULATION USE

[Standards for conformance]

Attic floor	Insulation materials intended for exposed use in attic floors shall be capable of meeting the same smoldering combustion requirements given for cellulose insulation in ASTM [1] C739–88.
Enclosed space	Insulation materials intended for use within enclosed stud or joist spaces shall be capable of meeting the smoldering combustion requirements in ASTM C739–88.
Exposed interior walls and ceilings.	Insulation materials, including those with combustible facings, which remain exposed and serve as wall or ceiling interior finish, shall have a flame spread classification not to exceed 150 (per ASTM E84–89a).
Exterior envelope walls and roofs.	Exterior envelope walls and roofs containing thermal insulations shall meet applicable local government building code requirements for the complete wall or roof assembly.
Pipes, ducts, and equipment	Insulation materials intended for use on pipes, ducts and equipment shall be capable of meeting a flame spread classification not to exceed 150 (per ASTM E84–89a).

[1] ASTM indicates American Society for Testing and Materials.

STORM WINDOWS

[Standards for conformance]

Storm windows:	
Aluminum insulating storm windows	ANSI/AAMA [1] 1002.10–83.
Aluminum frame storm windows	ANSI/AAMA 1002.10–83.
Wood frame storm windows	ANSI/NWWDA [2] I.S. 2–87. (Section 3)
Rigid vinyl frame storm windows	ASTM [3] D4099–89.
Frameless plastic glazing storm	Required minimum thickness windows is 6 mil (.006 inches).
Movable insulation systems for windows	Commercially available.

[1] ANSI/AAMA indicates American National Standards Institute/American Architectural Manufacturers Association.
[2] ANSI/NWWDA indicates American National Standards Institute/National Wood Window & Door Association.
[3] ASTM indicates American Society for Testing and Materials.

STORM DOORS

[Standards for conformance]

Storm doors—Aluminum:	
Storm Doors	ANSI/AAMA [1] 1102.7–89.
Sliding glass storm doors	ANSI/AAMA 1002.10–83.

STORM DOORS—Continued

[Standards for conformance]

Wood storm doors	ANSI/NWWDA[2] I.S. 6–86.
Rigid vinyl storm doors	ASTM[3] D3678–88.
Vestibules:	
Materials to construct vestibules	Commercially available.
Replacement windows:	
Aluminum frame windows	ANSI/AAMA 101–88.
Steel frame windows	Steel Window Institute recommended specifications for steel windows, 1990.
Wood frame windows	ANSI/NWWDA I.S. 2–87.
Rigid vinyl frame windows	ASTM D4099–89.

[1] ANSI/AAMA indicates American National Standards Institute/American Architectural Manufacturers Association.
[2] ANSI/NWWDA indicates American National Standards Institute/National Wood Window & Door Association.
[3] ASTM indicates American Society for Testing and Materials.

REPLACEMENT DOORS

[Standards for conformance]

Replacement doors—Hinged doors:	
Steel doors	ANSI/SDI[1] 100–1985.
Wood doors:	
Flush doors	ANSI/NWWDA[2] I.S. 1–87. (exterior door provisions)
Pine, fir, hemlock and spruce doors	ANSI/NWWDA I.S. 6–86.
Sliding patio doors:	
Aluminum doors	ANSI/AAMA[3] 101–88.
Wood doors	NWWDA I.S. 3–83.

[1] ANSI/SDI indicates American National Standards Institute/Steel Door Institute.
[2] ANSI/NWWDA indicates American National Standards Institute/National Wood Window & Door Association.
[3] ANSI/AAMA indicates American National Standards Institute/American Architectural Manufacturers Association.

CAULKS AND SEALANTS:

[Standards for conformance]

Caulks and sealants:	
Putty	FS[1] TT–P–00791B, October 16, 1969 and Amendment 2, March 23, 1971.
Glazing compounds for metal sash	ASTM[2] C669–75 (1989).
Oil and resin base caulks	ASTM C570–72 (1989).
Acrylic (solvent types) sealants	FS TT–S–00230C, February 2, 1970 and Amendment 2, October 9, 1970.
Butyl rubber sealants	FS TT–S–001657, October 8, 1970.
Chlorosulfonated polyethylene sealants	FS TT–S–00230C, February 2, 1970 and Amendment 2, October 9, 1970.
Latex sealing compounds	ASTM C834–76 (1986).
Elastomeric joint sealants (normally considered to include polysulfide, polyurethane, and silicone).	ASTM C920–87.
Preformed gaskets and sealing materials	ASTM C509–84.

[1] FS indicates Federal Specifications.
[2] ASTM indicates American Society for Testing and Materials.

WEATHERSTRIPPING

[Standards for conformance]

Weatherstripping	Commercially available.
Vapor retarders	Selected according to the provisions cited in ASTM[1] C755–85 (1990). Permeance not greater than 1 perm when determined according to the desiccant method de- scribed in ASTM E96–90.
Items to improve attic ventilation	Commercially available.
Clock thermostats	NEMA[2] DC 3–1989.

[1] ASTM indicates American Society for Testing and Materials.
[2] NEMA indicates National Electrical Manufacturers Association.

HEAT EXCHANGERS

[Standards for conformance]

Heat exchangers, water-to-water and steam-to-water.	ASME[1] Boiler and Pressure Vessel Code, 1992, Sections II, V, VIII, IX, and X, as applicable to pressure vessels. Standards of Tubular Exchanger Manufacturers Association, Seventh Edition, 1988.
Heat exchangers with gas-fired appliances[2].	Conformance to AGA[3] Requirements for Heat Reclaimer Devices for Use with Gas-Fired Appliances No. 1–80, June 1, 1980. AGA Laboratories Certification Seal.

HEAT EXCHANGERS—Continued

[Standards for conformance]

Heat pump water heating heat recovery systems.	Electrical components to be listed by UL.[4]

[1] ASME indicates American Society of Mechanical Engineers.
[2] The heat reclaimer is for installation in a section of the vent connector from appliances equipped with draft hoods or appliances equipped with powered burners or induced draft and not equipped with a draft hood.
[3] AGA indicates American Gas Association.
[4] UL indicates Underwriters Laboratories.

BOILER/FURNACE CONTROL SYSTEMS

[Standards for conformance]

Automatic set back thermostats	Listed by UL.[1] Conformance to NEMA[2] DC 3–1989.
Line voltage or low voltage room thermostats	NEMA DC 3–1989.
Automatic gas ignition systems	ANSI[3] Z21.21–1987 and Z21.21a-1989. AGA[4] Laboratories Certification Seal.
Energy management systems	Listed by UL.
Hydronic boiler controls	Listed by UL.
Other burner controls	Listed by UL.

[1] UL indicates Underwriters Laboratories.
[2] NEMA indicates National Electrical Manufacturers Association.
[3] ANSI indicates American National Standards Institute.
[4] AGA indicates American Gas Association.

WATER HEATER MODIFICATIONS

[Standards for conformance]

Insulate tank and distribution piping	(See insulation section of this appendix).
Install heat traps on inlet and outlet piping	Applicable local plumbing code.
Install/replace water heater heating elements	Listed by UL.[1]
Electric, freeze-prevention tape for pipes	Listed by UL.
Reduce thermostat settings	State or local recommendations.
Install stack damper, gas-fueled	ANS1[2] Z21.66–1988, including Exhibits A&B, and ANSI Z223.1–1988.
Install stack damper, oil-fueled	UL 17, November 28, 1988, and NFPA[3] 31–1987.
Install water flow modifiers	Commercially available.

[1] UL indicates Underwriters Laboratories.
[2] ANSI indicates American National Standards Institute.
[3] NFPA indicates National Fire Prevention Association.

WASTE HEAT RECOVERY DEVICES

[Standards for conformance]

Desuperheater/water heaters	ARI[1] 470–1987.
Condensing heat exchangers	Commercially available components and in new heating furnace systems to manufacturers' specifications.
Condensing heat exchangers	Commercially available (Commercial, multi-story building, with teflon-lined tubes institutional) to manufacturers' specifications.
Energy recovery equipment	Energy Recovery Equipment and Systems Air-to-Air (1978) Sheet Metal and Air-Conditioning Contractors National Association (SMACNA).[2]

[1] ARI indicates Air Conditioning and Refrigeration Institute.
[2] SMACNA denotes Sheet Metal and Air Conditioning Contractors' National Association.

BOILER REPAIR AND MODIFICATIONS/EFFICIENCY IMPROVEMENTS

[Standards for conformance]

Install gas conversion burners	ANSI[1] Z21.8–1984, (for gas or oil-fired systems) ANSI Z21.17–1984, ANSI Z21.17a-1990, and ANSI Z223.1–1988. AGA[2] Laboratories Certification seal.
Replace oil burner	UL[3] 296, February 28, 1989 Revision and NFPA[4] 31–1987.
Install burners (oil/gas)	ANSI Z223.1–1988 for gas equipment and NFPA 31–1987 for oil equipment.
Re-adjust boiler water temperature or install automatic boiler temperature reset control.	ASME[5] CSD–1–1988, ASME CSD–1a-1989, ANSI Z223.1–1988, and NFPA 31–1987.
Replace/modify boilers	ASME Boiler and Pressure Vessel Code, 1992, Sections II, IV, V, VI, VIII, IX, and X. Boilers must be Institute of Boilers and Radiation Manufacturers (IBR) equipment.
Clean heat exchanger, adjust burner air shutter(s), check smoke no. on oil-fueled equipment. Check operation of pump(s) and replacement filters.	Per manufacturers' instructions.
Repair combustion chambers	Refractory linings may be required for conversions.

BOILER REPAIR AND MODIFICATIONS/EFFICIENCY IMPROVEMENTS—Continued

[Standards for conformance]

Replace heat exchangers, tubes	Protection from flame contact with conversion burners by refractory shield.
Install/replace thermostatic radiator valves	Commercially available. One pipe steam systems require air vents on each radiator; see manufacturers' requirements.
Install boiler duty cycle control system	Commercially available. NFPA 70, National Electrical Code (NEC) 1993 and local electrical codes provisions for wiring.

[1] ANSI indicates American National Standards Institute.
[2] AGA indicates American Gas Association.
[3] UL indicates Underwriters Laboratories.
[4] NFPA indicates National Fire Prevention Association.
[5] ANSI/ASME indicates American National Standards Institute/American Society of Mechanical Engineers.

HEATING AND COOLING SYSTEM REPAIRS AND TUNE-UPS/EFFICIENCY IMPROVEMENTS

[Standards for conformance]

Install duct insulation	FS[1] HH-I–558C, January 7, 1992 (see insulation sections of this appendix).
Reduce input of burner; derate gas-fueled equipment	Local utility company and procedures if applicable for gas-fueled furnaces and ANSI[2] Z223.1–1988 (NFPA[3] 54–1988) including appendix H.
Repair/replace oil-fired equipment	NFPA 31–1987.
Replace combustion chamber in oil-fired furnaces or boilers	NFPA 31–1987.
Clean heat exchanger and adjust burner: adjust air shutter and check CO_2 and stack temperature. Clean or replace air filter on forced air furnace.	ANSI Z223.1–1988 (NFPA 54–1988) including appendix H.
Install vent dampers for gas-fueled heating systems	Applicable sections of ANSI Z223.1–1988 (NFPA 54–1988) including appendices H, I, J, and K. ANSI Z21.66–1988 and exhibits A & B for electrically operated dampers.
Install vent dampers for oil-fueled heating systems	Applicable sections of NFPA 31–1987 for installation and in conformance with UL[4] 17, November 28, 1988.
Reduce excess combustion air:	
A: Reduce vent connector size of gas-fueled appliances	ANSI Z223.1–1988 (NFPA 54–1988) part 9 and appendices G & H.
B: Adjust barometric draft regulator for oil fuels	NFPA 31–1987 and per manufacturers' (furnace or boiler) instructions.
Replace constant burning pilot with electric ignition device on gas-fueled furnaces or boilers.	ANSI Z21.71–1981, Z21.71a-1985, and Z21.71b-1989.
Readjust fan switch on forced air gas or oil-fueled furnaces	Applicable sections and appendix H of ANSI Z223.1–1988 (NFPA 54–1988) for gas furnaces and NFPA 31–1987 for oil furnaces.
Replace burners	See power burners (oil/gas).
Install/replace duct furnaces (gas)	ANSI Z223.1–1988 (NFPA 54–1988).
Install/replace heat pumps	Listed by UL.
Replace air diffusers, intakes, registers, and grilles	Commercially available.
Install/replace warm air heating metal ducts	Commercially available.
Filter alarm units	Commercially available.

[1] FS indicates Federal Specifications.
[2] ANSI indicates American National Standards Institute.
[3] NFPA indicates National Fire Prevention Association.
[4] UL indicates Underwriters Laboratories.

REPLACEMENT FURNACES, BOILERS, AND WOOD STOVES

[Standards for conformance]

Chimneys, fireplaces, vents and solid fuel burning appliances	NFPA[1] 211–1988.
Gas-fired furnaces	ANS1[2] Z21.47–1987, Z21.47a–1988, and Z21.47b–1989. ANSI Z223.1–1988 (NFPA 54–1988).
Oil-fired furnaces	UL[3] 727, August 27, 1991 Revision and NFPA 31–1987.
Liquified petroleum gas storage	NFPA 58–1989.
Ventilation fans:	
Including electric attic, ceiling, and whole house fans	UL 507, August 23, 1990 Revision.

[1] NFPA indicates National Fire Prevention Association.
[2] ANSI indicates American National Standards Institute.
[3] UL indicates Underwriters Laboratories.

AIR CONDITIONERS AND COOLING EQUIPMENT

[Standards for conformance]

Air conditioners:	
Central air conditioners	ARI[1] 210/240–1989.

AIR CONDITIONERS AND COOLING EQUIPMENT—Continued

[Standards for conformance]

Room size units	ANSI/AHAM[2] RAC–1–1982.
Other cooling equipment:	
Including evaporative coolers, heat pumps and other equipment	UL[3] 1995, November 30, 1990.[4]

[1] ARI indicates Air Conditioning and Refrigeration Institute.
[2] AHAM/ANSI indicates American Home Appliance Manufacturers/American National Standards Institute.
[3] UL indicates Underwriters Laboratories.
[4] This standard is a general standard covering many different types of heating and cooling equipment.

SCREENS, WINDOW FILMS, AND REFLECTIVE MATERIALS

[Standards for conformance]

Insect screens	Commercially available.
Window films	Commercially available.
Shade screens:	
Fiberglass shade screens	Commercially available.
Polyester shade screens	Commercially available.
Rigid awnings:	
Wood rigid awnings	Commercially available.
Metal rigid awnings	Commercially available.
Louver systems:	
Wood louver systems	Commercially available.
Metal louver systems	Commercially available.
Industrial-grade white paint used as a heat-reflective measure on awnings, window louvers, doors, and exterior duct work (exposed).	Commercially available.

[58 FR 12529, Mar. 4, 1993, as amended at 69 FR 18803, Apr. 9, 2004]

PART 445 [RESERVED]

PART 451—RENEWABLE ENERGY PRODUCTION INCENTIVES

Sec.
451.1 Purpose and scope.
451.2 Definitions.
451.3 Who may apply.
451.4 What is a qualified renewable energy facility.
451.5 Where and when to apply.
451.6 Duration of incentive payments.
451.7 Metering requirements.
451.8 Application content requirements.
451.9 Procedures for processing applications.
451.10 Administrative appeals.

AUTHORITY: 42 U.S.C. 7101, *et seq.;* 42 U.S.C. 13317.

SOURCE: 60 FR 36964, July 19, 1995, unless otherwise noted.

§451.1 Purpose and scope.

(a) The provisions of this part cover the policies and procedures applicable to the determinations by the Department of Energy (DOE) to make incentive payments, under the authority of 42 U.S.C. 13317, for electric energy generated and sold by a qualified renewable energy facility owned by a State or political subdivision thereof; a not-for-profit electric cooperative; a public utility described in section 115 of the Internal Revenue Code of 1986; an Indian tribal government or subdivision thereof; or a Native corporation.

(b) Determinations to make incentive payments under this part are not subject to the provisions of 10 CFR part 600 and such payments shall not be construed to be financial assistance.

[60 FR 36964, July 19, 1995, as amended at 71 FR 46386, Aug. 14, 2006]

§451.2 Definitions.

As used in this part—

Biomass means biologically generated energy sources such as heat derived from combustion of plant matter, or from combustion of gases or liquids derived from plant matter, animal wastes, or sewage, or from combustion of gases derived from landfills, or hydrogen derived from these same sources.

Closed-loop biomass means any organic material from a plant which is planted exclusively for purposes of being used at a qualified renewable energy facility to generate electricity.

Date of first use means, at the option of the facility owner, the date of the first kilowatt-hour sale, the date of

completion of facility equipment testing, or the date when all approved permits required for facility construction are received.

Deciding Official means the Manager of the Golden Field Office of the Department of Energy (or any DOE official to whom the authority of the Manager of the Golden Field Office may be redelegated by the Secretary of Energy).

DOE means the Department of Energy.

Finance Office means the DOE Office of the Chief Financial Officer (or any office to which that Office's authority may be redelegated by the Secretary of Energy).

Fiscal year means the Federal fiscal year beginning October 1 and ending on September 30 of the following calendar year.

Indian tribal government means the governing body of an Indian tribe as defined in section 4 of the Indian Self-Determination and Education Assistance Act (25 U.S.C. 450b).

Native corporation has the meaning set forth in the Alaska Native Claims Settlement Act (25 U.S.C. 1602).

Net electric energy means the metered kilowatt-hours (kWh) generated and sold, and excludes electric energy used within the renewable energy facility to power equipment such as pumps, motors, controls, lighting, heating, cooling, and other systems needed to operate the facility.

Not-for-profit electrical cooperative means a cooperative association that is legally obligated to operate on a not-for-profit basis and is organized under the laws of any State for the purpose of providing electric service to its members.

Ocean means the waters of the Atlantic Ocean (including the Gulf of Mexico) and the Pacific Ocean within the jurisdiction of the United States from which energy may be derived through application of tides, waves, currents, thermal differences, or other means.

Renewable energy facility means a single module or unit, or an aggregation of such units, that generates electric energy which is independently metered and which results from the utilization of a renewable energy source.

Renewable energy source means solar heat, solar light, wind, ocean, geothermal heat, and biomass, except for—

(1) Heat from the burning of municipal solid waste; or

(2) Heat from a dry steam geothermal reservoir which—

(i) Has no mobile liquid in its natural state;

(ii) Is a fluid composed of at least 95 percent water vapor; and

(iii) Has an enthalpy for the total produced fluid greater than or equal to 2.791 megajoules per kilogram (1200 British thermal units per pound).

State means the District of Columbia, Puerto Rico, and any of the States, Commonwealths, territories, and possessions of the United States.

[60 FR 36964, July 19, 1995, as amended at 71 FR 46386, Aug. 14, 2006]

§ 451.3 Who may apply.

Any owner, or operator with the written consent of the owner, but not both, of a qualified renewable energy facility, may apply for incentive payments for net electric energy generated from a renewable energy source and sold.

§ 451.4 What is a qualified renewable energy facility.

In order to qualify for an incentive payment under this part, a renewable energy facility must meet the following qualifications—

(a) *Owner qualifications.* The owner must be—

(1) A State or a political subdivision of a State (or agency, authority, or instrumentality thereof);

(2) A public utility described in section 115 of the Internal Revenue Code of 1986;

(3) A not-for-profit electrical cooperative;

(4) An Indian tribal government or subdivision thereof; or

(5) A Native corporation.

(b) *What constitutes ownership.* The owner must have all rights to the beneficial use of the renewable energy facility, and legal title must be held by, or for the benefit of, the owner.

(c) *Sales affecting interstate commerce.* The net electric energy generated by the renewable energy facility must be

sold to another entity for consideration.

(d) *Type of renewable energy sources.* The source of the electric energy for which an incentive payment is sought must be a renewable energy source, as defined in §451.2.

(e) *Time of first use.* The date of the first use of a newly constructed renewable energy facility, or a facility covered by paragraph (f) of this section, must occur during the inclusive period beginning October 1, 1993, and ending on September 30, 2016. For facilities whose date of first use occurred in the period October 1, 2003, through September 30, 2004, the time of first use shall be deemed to be October 1, 2004.

(f) *Conversion of non-qualified facilities.* Existing non-qualified facilities that are converted must meet either of the following criteria—

(1) A facility employing solar, wind ocean, geothermal or biomass sources must be refurbished during the allowed time of first use such that the fair market value of any previously used property does not exceed 20% of the facility's total value.

(2) A facility not employing solar, wind ocean, geothermal or biomass sources must be converted in part or in whole to a qualified facility during the allowed time of first use.

(g) *Location.* The qualified renewable energy facility must be located in a State or in U.S. jurisdictional waters.

[60 FR 36964, July 19, 1995, as amended at 71 FR 46386, Aug. 14, 2006]

§451.5 Where and when to apply.

(a) *Pre-application and notification.* (1) An applicant may submit at any time a pre-application, containing the information described in §451.8 (a) through (e), to obtain a preliminary and conditional determination of eligibility.

(2) To assist DOE in its budget planning, the owner or operator of a qualified renewable energy facility is requested to provide notification at least 6 months in advance of when a facility is expected to be first used, providing projected information specified in §451.8 (a) through (e).

(b) *Application.* (1) An application for an incentive payment for electric energy generated and sold in a fiscal year must be filed during the first quarter (October 1 through December 31) of the next fiscal year, except as provided in paragraph (b)(2) of this section.

(2) For facilities whose date of first use occurred in the period October 1, 2003, through September 30, 2005, applications for incentive payments for electric energy generated and sold in fiscal year 2005 must be filed by August 31, 2006.

(3) Failure to file an application in any fiscal year for payment for energy generated in the preceding fiscal year shall disqualify the owner or operator from eligibility for any incentive payment for energy generated in that preceding fiscal year.

(c) *Where.* Applications and notifications to the Department shall be submitted to the Renewable Energy Production Incentive Program, U.S. Department of Energy, Golden Field Office, 1617 Cole Boulevard, Golden, CO, 80401.

[60 FR 36964, July 19, 1995, as amended at 71 FR 46387, Aug. 14, 2006]

§451.6 Duration of incentive payments.

Subject to the availability of appropriated funds, DOE shall make incentive payments under this part with respect to a qualified renewable energy facility for 10 consecutive fiscal years. Such period shall begin with the fiscal year in which application for payment for electricity generated by the facility is first made and the facility is determined by DOE to be eligible for receipt of an incentive payment. The period for payment under this program ends with fiscal year 2026.

[60 FR 36964, July 19, 1995, as amended at 71 FR 46387, Aug. 14, 2006]

§451.7 Metering requirements.

The net electric energy generated and sold (kilowatt-hours) by the owner or operator of a qualified renewable energy facility must be measured by a standard metering device that—

(a) Meets generally accepted industry standards;

(b) Is maintained in proper working order according to the instructions of its manufacturer; and

(c) Is calibrated according to generally accepted industry standards.

§ 451.8 Application content requirements.

An application for an incentive payment under this part must be signed by an authorized executive official and shall provide the following information—

(a) A statement indicating that the applicant is the owner of the facility or is the operator of the facility and has the written consent of an authorized executive official of the owner to file an application;

(b) The name of the facility or other official designation;

(c) The location and address of the facility and type of renewable energy source;

(d) The name, address, and telephone number of a point of contact to respond to questions or requests for additional information;

(e) A clear statement of how the application satisfies each and every part of the eligibility criteria under § 451.4;

(f) A statement of the annual and monthly metered net electric energy generated and sold during the prior fiscal year by the qualified renewable energy facility, measured in kilowatt-hours, for which an incentive payment is requested;

(g) In the case of a qualified renewable energy facility which generates electric energy using a fossil fuel, nuclear energy, or other non-qualified energy source in addition to using a renewable energy source, a statement of the net electric energy generated, measured in kilowatt-hours, attributable to the renewable energy source, including a calculation showing the total monthly and annual kilowatt-hours generated and sold during the fiscal year multiplied by a fraction consisting of the heat input, as measured in appropriate energy units, received by the working fluid from the renewable energy sources divided by the heat input, as measured in the same energy units, received by the working fluid from all energy sources;

(h) The total amount of electric energy for which payment is requested, including the net electric energy generated in the prior fiscal year, as determined according to paragraph (f) or (g) of this section;

(i) Copies of permit authorizations if the date of first use is based on permit approvals and this is the initial application;

(j) Instructions for payment by electronic funds transfer;

(k) A statement agreeing to retain records for a period of three (3) years which substantiate the annual and monthly metered number of kilowatt-hours generated and sold, and to provide access to, or copies of, such records within 30 days of a written request by DOE; and

(l) A statement signed by an authorized executive official certifying that the information contained in the application is accurate.

(m) If a not-for-profit electric cooperative, a statement certifying that no claim for tax credit has been made for the same electricity for which incentive payments are requested.

[60 FR 36964, July 19, 1995, as amended at 71 FR 46387, Aug. 14, 2006]

§ 451.9 Procedures for processing applications.

(a) *Supplemental information.* DOE may request supplementary information relating to the application.

(b) *Audits.* DOE may require the applicant to conduct at its own expense and submit an independent audit, or DOE may conduct an audit, to verify the number of kilowatt-hours claimed to have been generated and sold by the qualified renewable energy facility and for which an incentive payment has been requested or made.

(c) *DOE determinations.* The Assistant Secretary for Energy Efficiency and Renewable Energy shall determine the extent to which appropriated funds are available to be obligated under this program for each fiscal year. Upon evaluating each application and any other relevant information, DOE shall further determine:

(1) Eligibility of the applicant for receipt of an incentive payment, based on the criteria for eligibility specified in this part;

(2) The number of kilowatt-hours to be used in calculating a potential incentive payment, based on the net electric energy generated from a qualified

renewable energy source at the qualified renewable energy facility and sold during the prior fiscal year;

(3) The number of kilowatt-hours to be used in calculating a potential additional incentive payment, based on the total quantity of accrued energy generated during prior fiscal years;

(4) The amounts represented by 60 percent of available funds and by 40 percent of available funds; and

(5) Whether justification exists for altering the 60:40 payment ratio specified in paragraph (e) of this section. If DOE intends to modify the 60:40 ratio, the Department shall notify Congress, setting forth reasons for such change.

(d) *Calculating payments.* Subject to the provisions of paragraph (e) of this section, potential incentive payments under this part shall be determined by multiplying the number of kilowatt-hours determined under §451.9(c)(2) by 1.5 cents per kilowatt-hour, and adjusting that product for inflation for each fiscal year beginning after calendar year 1993 in the same manner as provided in section 29(d)(2)(B) of the Internal Revenue Code of 1986, except that in applying such provisions calendar year 1993 shall be substituted for calendar year 1979. Using the same procedure, a potential additional payment shall be determined for the number of kilowatt-hours determined under paragraph (c)(3) of this section. If the sum of these calculated payments does not exceed the funds determined to be available by the Assistant Secretary for Energy Efficiency and Renewable Energy under §451.9(c), DOE shall make payments to all qualified applicants.

(e) *Insufficient funds.* If funds are not sufficient to make full incentive payments to all qualified applicants, DOE shall—

(1) Calculate potential incentive payments, if necessary on a *pro rata* basis, not to exceed 60 percent of available funds to owners or operators of qualified renewable energy facilities using solar, wind, ocean, geothermal, and closed-loop biomass technologies based on prior year energy generation;

(2) Calculate potential incentive payments, if necessary on a *pro rata* basis, not to exceed 40 percent of available funds to owners or operators of all other qualified renewable energy facilities based on prior year energy generation;

(3) If the amounts calculated in paragraph (e)(1) and (2) of this section result in one owner group with insufficient funds and one with excess funds, allocate excess funds to the owner group with insufficient funds and calculate additional incentive payments, on a *pro rata* basis if necessary, to such owners or operators based on prior year energy generation.

(4) If potential payments calculated in paragraphs (e)(1), (2), and (3) of this section do not exceed available funding, allocate 60% of remaining funds to paragraph (e)(1) recipients and 40% to paragraph (e)(2) recipients and calculate additional incentive payments, if necessary on a *pro rata* basis, to owners or operators based on accrued energy;

(5) If the amounts calculated in paragraph (e)(4) of this section result in one owner group with insufficient funds and one with excess funds, allocate excess funds to the owner group with insufficient funds and calculate additional incentive payments, on a *pro rata* basis if necessary, to such owners or operators based on accrued energy.

(6) Notify Congress if potential payments resulting from paragraphs (e)(3) or (5) of this section above will result in alteration of the 60:40 payment ratio;

(7) Make incentive payments based on the sum of the amounts determined in paragraphs (e)(1) through (5) of this section for each applicant;

(8) Treat the number of kilowatt-hours for which an incentive payment is not made as a result of insufficient funds as accrued energy for which future incentive payment may be made; and

(9) Maintain a record of each applicant's accrued energy.

(f) *Notice to applicant.* After calculating the amount of the incentive payment under paragraphs (e) through (g) of this section, the DOE Deciding Official shall then issue a written notice of the determination to the applicant—

(1) Approving the application as eligible for payment and forwarding a copy to the DOE Finance Office with a request to pay;

(2) Setting forth the calculation of the approved amount of the incentive payment; and

(3) Stating the amount of accrued energy, measured in kilowatt-hours, for each qualified renewable energy facility, if any, and the energy source for same.

(g) *Disqualification.* If the application does not meet the requirements of this part or some of the kilowatt-hours claimed in the application are disallowed as unqualified, the Deciding Official shall issue a written notice denying the application in whole or in part with an explanation of the basis for denial.

[60 FR 36964, July 19, 1995, as amended at 71 FR 46387, Aug. 14, 2006]

§ 451.10 Administrative appeals.

(a) In order to exhaust administrative remedies, an applicant who receives a notice denying an application in whole or in part shall appeal, on or before 45 days from date of the notice issued by the DOE Deciding Official, to the Office of Hearings and Appeals, 1000 Independence Avenue, S.W., Washington, D.C. 20585, in accordance with the procedures set forth in subpart C of 10 CFR part 1003.

(b) If an applicant does not appeal under paragraph (a) of this section, the determination of the DOE Deciding Official shall become final for DOE and judicially unreviewable.

(c) If an applicant appeals on a timely basis under paragraph (a) of this section, the decision and order of the Office of Hearings and Appeals shall be final for DOE.

(d) If the Office of Hearings and Appeals orders an incentive payment, the DOE Deciding Official shall send a copy of such order to the DOE Finance Office with a request to pay.

PART 452—PRODUCTION INCENTIVES FOR CELLULOSIC BIOFUELS

Sec.

452.1 Purpose and scope.
452.2 Definitions.
452.3 Solicitations.
452.4 Eligibility requirements.
452.5 Bidding procedures.
452.6 Incentive award terms and limitations.

AUTHORITY: 42 U.S.C. 7101 *et seq.;* 42 U.S.C. 16251.

SOURCE: 74 FR 52871, Oct. 15, 2009, unless otherwise noted.

§ 452.1 Purpose and scope.

(a) This part sets forth the standards, policies, and procedures that the Department of Energy uses for receiving, evaluating, and awarding bids in reverse auctions of production incentive payments for cellulosic biofuels under section 942 of the Energy Policy Act of 2005 (42 U.S.C. 16251).

(b) Part 1024 of chapter X of title 10 of the Code of Federal Regulations shall not apply to actions taken under this part.

§ 452.2 Definitions.

As used in this part:

Cellulosic biofuel means any liquid fuel produced from cellulosic feedstocks.

Cellulosic feedstock means any lignocellulosic feedstock as defined by EPAct, section 932(a)(2).

Commercially significant quantity means 10 million gallons or more of cellulosic biofuels produced in one year.

DOE means the U.S. Department of Energy.

Eligible biofuels producer means a business association, including but not limited to a sole proprietorship, partnership, joint venture, corporation, or other business entity that owns and operates, or plans to own and operate, an eligible cellulosic biofuels production facility and that meets all other eligibility requirements that are conditions on the receipt of production incentives under this part.

Eligible cellulosic biofuels production facility means a facility—

(1) Located in the United States (including U.S. territories and possessions);

(2) Which meets all applicable Federal and State permitting requirements;

(3) Employs a demonstrated refining technology; and

(4) Meets any relevant financial criteria established by the Secretary.

EPAct 2005 means the Energy Policy Act of 2005, Public Law 109–58 (August 8, 2005).

Open window means the period during each reverse auction, as specified in an associated solicitation, during which DOE accepts bids for production incentives under this part.

Secretary means the Secretary of Energy.

§ 452.3 Solicitations.

The reverse auction process commences with the issuance of a solicitation by DOE. DOE will publish a solicitation in the FEDERAL REGISTER and shall post the solicitation on its website at *www.eere.energy.gov* no later than 60 days before the bidding in a reverse auction under this part commences. The solicitation shall:

(a) Invite interested persons and businesses to submit pre-qualification statements;

(b) Set forth the terms on which bids will be accepted;

(c) Specify the open window for bidding; and

(d) Specify the date by which successful bidders will be required to file pre-auction eligibility submissions.

§ 452.4 Eligibility requirements.

(a) *Pre-auction eligibility submissions.* (1) Entities that intend to participate in a reverse auction, within the time period stated in the relevant solicitation, must file a pre-auction eligibility submission that provides all information requested in the applicable solicitation to which it is responding, including an implementation plan.

(2) Each pre-auction eligibility submission's implementation plan must, at a minimum:

(i) Demonstrate that the filing party owns and operates or plans to own and operate an eligible cellulosic biofuels production facility;

(ii) Identify the site or proposed site for the filing party's eligible cellulosic biofuels production facility;

(iii) Demonstrate that the cellulosic biofuel to be produced for purposes of receiving an award either currently is suitable for widespread general use as a transportation fuel or will be suitable for such use in a timeframe and in sufficient volumes to significantly contribute to the goal of 1 billion gallons of refined cellulosic biofuel by August 2015.

(iv) Provide audited or *pro forma* financial statements for the latest 12 month period; and

(v) Identify one or more proposed sources of financing for the construction or expansion of the filing party's eligible cellulosic biofuels production facility.

(b) *Notification of pre-auction eligibility status.* DOE shall notify each entity that files a pre-auction eligibility submission of its acceptance or rejection no later than 15 days before the reverse auction for which the submission was made. A DOE decision constitutes final agency action and is conclusive.

(c) *Progress reports.* Within one year after the reverse auction in which a bidder successfully competed, the bidder must submit a progress report that includes all additional information required by the solicitation in which the bidder submitted a successful bid and which demonstrates that the bidder has:

(1) Acquired the site where its proposed eligible cellulosic biofuels production facility is or will be located;

(2) Obtained secure financing commitments for the plant or expansion thereof, as necessary to produce cellulosic biofuels; and

(3) Entered into a written engineering, procurement, and construction (EPC) contract for design and construction of the eligible cellulosic biofuels production facility; such EPC contract must provide for completion of construction of the eligible cellulosic biofuels production facility such that operations at the plant or plant expansion will commence within three years of the reverse auction in which the bidder successfully competed.

(d) *Production agreement.* Within 90 days after submission of its progress report under paragraph (c) of this section, the successful bidder must enter into an agreement with DOE which requires the bidder to begin production of commercially significant quantities of cellulosic biofuels, at the eligible cellulosic biofuels production facility that was the subject of the relevant bid, not later than three years from the date of the acceptance of the successful bid.

(e) *Confirmation of continuing eligibility*. After receiving the progress report described in the paragraph (e) of the section and upon confirmation by DOE that the successful bidder has entered into a production agreement with DOE, as described in paragraph (d) of this section, DOE will confirm to the bidder that it continues to meet the eligibility requirements of this part.

(f) *Contractual condition on eligibility*. (1) As a condition of the receipt of an award under this part, a successful bidder in a reverse auction under this part must demonstrate that it has fulfilled the terms of its production agreement entered into with DOE pursuant to paragraph (d) of this section.

(2) As a condition of continuing to receive production incentive payments under this part, a bidder that has entered into a production agreement with DOE must annually submit to DOE, by a commercially reasonable date specified by DOE, verification of the bidder's production volumes for the prior calendar year. Within 90 days of the submission of such verification, DOE shall notify the successful bidder whether the bidder has fulfilled the terms of the production agreement and shall make payment of any production incentive awards then outstanding for the one year period covered by the verified data submission.

§ 452.5 Bidding procedures.

DOE shall conduct an electronic reverse auction through a limited duration single bid per producer auction process open only to pre-auction eligible cellulosic biofuels producers. The following procedures shall be used:

(a) DOE shall accept only electronic bids received from pre-auction eligible cellulosic biofuels producers during the open window established in the solicitation. The open window shall consist of a single continuous period of at least four hours for each auction.

(b) Bids shall identify an estimated annual production amount from an eligible cellulosic biofuels production facility on a per gallon, site, entity, and year specific basis for a consecutive six year production period. A bid also may be submitted for additional incentives for uncovered production volumes at a site where an award was made in an earlier auction round.

(c) All bids must set forth the methodology used to derive the estimates of annual production volumes covered by the bid and the bid shall be calculated on a gasoline equivalent volumetric basis using the lower heating Btu value of the fuel compared to the lower heating Btu value of gasoline.

(d) All bids will be confidential until 45 days after the close of the window for submission of bids for the reverse auction.

(e) Bid evaluation and incentive awards selection procedures include the following:

(1) After DOE evaluates the bids received during the open window, it shall, within 45 days following the close of the open window for submission of bids for the reverse auction, announce on DOE's website and by direct mail the names of the successful bidders and the terms of their bids.

(2) DOE shall issue awards for the bid production amounts beginning with the bidder that submitted the bid for the lowest level of production incentive on a per gallon basis.

(3) In the event of a tie among the lowest bids, preference will be given to the lowest tied bidder based on DOE's evaluation of the extent to which the tied bids meet the following criteria:

(i) Demonstrates outstanding potential for local and regional economic development;

(ii) Includes agricultural producers or cooperatives of agricultural producers as equity partners in the ventures; and

(iii) Has a strategic agreement in place to fairly reward feedstock suppliers.

(4) In the event more than one lowest tied bid equally meets the standards in paragraph (c)(3) of this section, the award will be distributed equally on a per capita basis among those lowest tied bidders meeting the standards.

§ 452.6 Incentive award terms and limitations.

(a) *Amount of incentive*. Subject to the availability of appropriated funds and the limitations in paragraph (c) of this section, an eligible cellulosic biofuels producer selected to receive an award

shall receive the amount of the production incentive on the per gallon basis requested in the auction solicitation for each gallon produced and sold by the entity during the first six years of operation of its eligible cellulosic biofuels production facility.

(b) *Failure to commence production.* Except in the circumstance of a force majeure event, as solely determined by DOE, failure by an eligible cellulosic biofuels producer that made a successful bid to commence production of cellulosic biofuels, at the eligible cellulosic biofuels production facility that was the subject of the successful bid, by the end of the third year after the close of submission of the open window of bids for the reverse auction in which it submitted a successful bid, shall result in immediate revocation of DOE's award to that producer.

(c) *Failure of the successful bidder to meet annual production obligations.* Except in the circumstance of a force majeure event, as solely determined by DOE, a successful bidder's failure to produce at least 50 percent of the volumes specified in its production agreement by December 31 of any year covered by the bid shall result in immediate revocation of DOE's award; if the successful bidder produces 50 percent or more of the volumes set forth in the production agreement on an annual basis by December 31 of any year covered by the agreement, any production shortfall will be carried forward and added to the successful bidder's production obligations for next year covered by the agreement.

(d) *Shortfalls remaining at the end of the production period.* If, for any reason, by December 31 of the last year of the production agreement, the bidder has failed to produce the total production volumes for all years covered by the agreement, any such remaining shortfall shall be awarded to the bidder with the next lowest bid in the auction round for which the award was made. If, however, the next best bidder is unable to enter into a production agreement with DOE within 30 days after being notified of its award, the shortfall shall be allocated instead to the next reverse auction.

(e) *Incentive award limitations.* The following limits shall apply to awards of cellulosic biofuels production incentives under this part:

(1) During the first four years after the commencement of the program, the incentive shall be limited to $1.00 per gallon. For purposes of this limitation, the program shall be deemed to have commenced on the date that the first solicitation for a reverse auction is issued;

(2) A per gallon cap over the remaining lifetime of the program of $.95 per gallon provided that—

(i) This cap shall be lowered by $.05 each year commencing the first year after annual cellulosic biofuels production in the United States exceeds 1 billion gallons;

(ii) Not more than 25 percent of the funds committed within each reverse auction shall be awarded to any single project;

(iii) Not more than $100 million in production incentives shall be awarded in any one calendar year; and

(iv) Not more than $1 billion in production incentives shall be awarded over the lifetime of the program.

(f) *Participation in subsequent auctions.* A successful bidder in a reverse auction under this part may participate in subsequent reverse auctions if the incentives sought will assist the addition of plant production capacity for the eligible cellulosic biofuels production facility associated with its previously successful bid.

(g) *Transferability of awards.* A production incentive award under this part may be transferred to a successor entity at the same production facility for which the award was made, provided that the successor entity meets all eligibility requirements of this part, including execution of an agreement with DOE to commence production of cellulosic biofuels in commercially significant quantities not later than three years of the date that bidding closes on the reverse auction in which the predecessor entity submitted a successful bid.

PART 455—GRANT PROGRAMS FOR SCHOOLS AND HOSPITALS AND BUILDINGS OWNED BY UNITS OF LOCAL GOVERNMENT AND PUBLIC CARE INSTITUTIONS

Subpart A—General Provisions

Sec.
455.1 Purpose and scope.
455.2 Definitions.
455.3 Administration of grants.
455.4 Recordkeeping.
455.5 Suspension and termination of grants.

Subpart B—State Plan Development and Approval

455.20 Contents of State Plan.
455.21 Submission and approval of State Plans and State Plan amendments.

Subpart C—Allocation of Appropriations Among the States

455.30 Allocation of funds.
455.31 Allocation formulas.
455.32 Reallocation of funds.

Subpart D—Preliminary Energy Audit and Energy Audit Grants [Reserved]

Subpart E—Technical Assistance Programs for Schools, Hospitals, Units of Local Government, and Public Care Institutions

455.60 Purpose.
455.61 Eligibility.
455.62 Contents of a technical assistance program.
455.63 Cost-effectiveness testing.
455.64 Life-cycle cost methodology.

Subpart F—Energy Conservation Measures for Schools and Hospitals

455.70 Purpose.
455.71 Eligibility.
455.72 Scope of the grant.

Subpart G—State Administrative Expenses

455.80 Purpose.
455.81 Eligibility.
455.82 Scope of the grant.

Subpart H—State Grants for Technical Assistance, Program Assistance, and Marketing

455.90 Purpose.
455.91 Eligibility.
455.92 State technical assistance awards.

Subpart I—Cost Sharing

455.100 Limits to Federal share.
455.101 Borrowing the non-Federal share/title to equipment.
455.102 Energy conservation measure cost-share credit.
455.103 Requirements for applications for credit.
455.104 Rebates from utilities and other entities.

Subpart J—Applicant Responsibilities—Grants to Institutions and Coordinating Agencies

455.110 Grant application submittals for technical assistance and energy conservation measures.
455.111 Applicant certifications for technical assistance and energy conservation measure grants to institutions and coordinating agencies.
455.112 Davis-Bacon wage rate requirement.
455.113 Grantee records and reports for technical assistance and energy conservation measure grants to institutions and coordinating agencies.

Subpart K—Applicant Responsibilities—Grants to States

455.120 Grant applications for State administrative expenses.
455.121 Grant applications for State technical assistance, program assistance, and marketing programs.
455.122 Applicant certifications for State grants for technical assistance, program assistance, and marketing.
455.123 Grantee records and reports for State grants for administrative expenses, technical assistance, program assistance, and marketing.

Subpart L—State Responsibilities

455.130 State evaluation of grant applications.
455.131 State ranking of grant applications.
455.132 State evaluation of requests for severe hardship assistance.
455.133 Forwarding of applications from institutions and coordinating agencies for technical assistance and energy conservation measure grants.
455.134 Forwarding of applications for State grants for technical assistance, program assistance, and marketing.
455.135 State liaison, monitoring, and reporting.

Subpart M—Grant Awards

455.140 Approval of applications from institutions and coordinating agencies for technical assistance and energy conservation measures.

455.141 Grant awards for units of local government, public care institutions, and coordinating agencies.
455.142 Grant awards for schools, hospitals, and coordinating agencies.
455.143 Grant awards for State administrative expenses.
455.144 Grant awards for State programs to provide technical assistance, program assistance, and marketing.

Subpart N—Administrative Review

455.150 Right to administrative review.
455.151 Notice requesting administrative review.
455.152 Transmittal of record on review.
455.153 Review by the Deputy Assistant Secretary.
455.154 Discretionary review by the Assistant Secretary.
455.155 Finality of decision.

AUTHORITY: 42 U.S.C. 6371 *et seq.*, and 42 U.S.C. 7101 *et seq.*

SOURCE: 58 FR 9438, Feb. 19, 1993, unless otherwise noted.

Subpart A—General Provisions

§455.1 Purpose and scope.

(a) This part establishes programs of financial assistance pursuant to Title III of the Energy Policy and Conservation Act, as amended, 42 U.S.C. 6371 *et seq.*

(b) This part authorizes grants to States or to public or non-profit schools and hospitals to assist them in conducting preliminary energy audits and energy audits, in identifying and implementing energy conservation maintenance and operating procedures, and in evaluating, acquiring, and installing energy conservation measures, including renewable resource measures, to reduce the energy use and anticipated energy costs of buildings owned by schools and hospitals.

(c) This part also authorizes grants to States or units of local government and public care institutions to assist them in conducting preliminary energy audits and energy audits, in identifying and implementing energy conservation maintenance and operating procedures, and in evaluating energy conservation measures, including renewable resource measures, to reduce the energy use and anticipated energy costs of buildings owned by units of local government and public care institutions.

§455.2 Definitions.

Act, as used in this part, means the Energy Policy and Conservation Act, Public Law 94–163, 89 Stat. 871 (42 U.S.C. 6201, *et seq.*), as amended by title III of the National Energy Conservation Policy Act, Public Law 95–619, 92 Stat. 3238 (42 U.S.C. 6371), and the State Energy Efficiency Programs Improvement Act of 1990, Public Law 101–440, 104 Stat. 1011.

Assistant Secretary means the Assistant Secretary for Conservation and Renewable Energy or any official to whom the Assistant Secretary's functions may be redelegated by the Secretary.

Auditor means any person who is qualified in accordance with 10 CFR 450.44 and with State requirements pursuant to §455.20(k), to conduct an energy audit.

Building means any structure, including a group of closely situated structural units that are centrally metered or served by a central utility plant, or an eligible portion thereof, the construction of which was completed on or before May 1, 1989, which includes a heating or cooling system, or both.

Civil rights requirements means civil rights responsibilities of applicants and grantees pursuant to the Nondiscrimination in Federally Assisted Programs regulation of the Department of Energy (10 CFR part 1040).

Complex means a closely situated group of buildings on a contiguous site such as a school or college campus or multibuilding hospital.

Construction completion means the date of issuance of an occupancy permit for a building or the date the building is ready for occupancy as determined by DOE.

Cooling degree days means the annual sum of the number of Fahrenheit degrees of each day's mean temperature above 65° for a given locality.

Coordinating agency means a State or any public or nonprofit organization legally constituted within a State which provides either administrative control or services for a group of institutions within a State and which acts on behalf of such institutions with respect to their participation in the program.

Deputy Assistant Secretary means the Deputy Assistant Secretary for Technical and Financial Assistance or any official to whom the Deputy Assistant Secretary's functions may be redelegated by the Assistant Secretary.

DOE means the Department of Energy.

Energy audit means a determination of the energy consumption characteristics of a building which:

(1) Identifies the type, size, and rate of energy consumption of such building and the major energy-using systems of such building;

(2) Determines appropriate energy conservation maintenance and operating procedures;

(3) Indicates the need, if any, for the acquisition and installation of energy conservation measures; and

(4) If paid for with financial assistance under this part, complies with 10 CFR 450.43.

Energy conservation maintenance and operating procedures means modifications in the maintenance and operations of a building and any installation therein which are designed to reduce the energy consumption in such building and which require no significant expenditure of funds, including, but not limited to:

(1) Effective operation and maintenance of ventilation systems and control of infiltration conditions, including:

(i) Repair of caulking or weatherstripping around windows and doors;

(ii) Reduction of outside air intake, shutting down ventilation systems in unoccupied areas, and shutting down ventilation systems when the building is not occupied; and

(iii) Assuring central or unitary ventilation controls, or both, are operating properly;

(2) Changes in the operation and maintenance of heating or cooling systems through:

(i) Lowering or raising indoor temperatures;

(ii) Locking thermostats;

(iii) Adjusting supply or heat transfer medium temperatures; and

(iv) Reducing or eliminating heating or cooling at night or at times when a building or complex is unoccupied;

(3) Changes in the operation and maintenance of lighting systems through:

(i) Reducing illumination levels;

(ii) Maximizing use of daylight;

(iii) Using higher efficiency lamps; and

(iv) Reducing or eliminating evening cleaning of buildings;

(4) Changes in the operation and maintenance of water systems through:

(i) Repairing leaks;

(ii) Reducing the quantity of water used, e.g., using flow restrictors;

(iii) Lowering settings for hot water temperatures; and

(iv) Raising settings for chilled water temperatures;

(5) Changes in the maintenance and operating procedures of the building's mechanical systems through:

(i) Cleaning equipment;

(ii) Adjusting air/fuel ratio;

(iii) Monitoring combustion;

(iv) Adjusting fan, motor, or belt drive systems;

(v) Maintaining steam traps; and

(vi) Repairing distribution pipe insulation; and

(6) Such other actions relating to operations and maintenance procedures as the State may determine useful or necessary. In general, energy conservation maintenance and operating procedures involve cleaning, repairing or adjusting existing equipment rather than acquiring new equipment.

Energy conservation measure means an installation or modification of an installation in a building which is primarily intended to maintain (in the case of load management systems) or reduce energy consumption and reduce energy costs, or allow the use of an alternative energy source, including, but not limited to:

(1) Insulation of the building structure and systems within the building;

(2) Storm windows and doors, multiglazed windows and doors, heat- absorbing or heat-reflective glazed and coated windows and door systems, additional glazing, reductions in glass area, and other window and door systems modifications;

(3) Automatic energy control systems which would reduce energy consumption;

(4) Load management systems which would shift demand for energy from peak hours to hours of low demand and lower cost;

(5) Equipment required to operate variable steam, hydraulic, and ventilating systems adjusted by automatic energy control systems;

(6) Active or passive solar space heating or cooling systems, solar electric generating systems, or any combination thereof;

(7) Active or passive solar water heating systems;

(8) Furnace or utility plant and distribution system modifications including:

(i) Replacement burners, furnaces, boilers, or any combination thereof which substantially increase the energy efficiency of the heating system;

(ii) Devices for modifying flue openings which will increase the energy efficiency of the heating system;

(iii) Electrical or mechanical furnace ignition systems which replace standing gas pilot lights; and

(iv) Utility plant system conversion measures including conversion of existing oil- and gas-fired boiler installations to alternative energy sources;

(9) Addition of caulking and weatherstripping;

(10) Replacement or modification of lighting fixtures (including exterior light fixtures which are physically attached to, or connected to, the building) to increase the energy efficiency of the lighting system without increasing the overall illumination of a facility, unless such increase in illumination is necessary to conform to any applicable State or local building code or, if no such code applies, the increase is considered appropriate by DOE;

(11) Energy recovery systems;

(12) Cogeneration systems which produce steam or forms of energy such as heat as well as electricity for use primarily within a building or a complex of buildings owned by an eligible institution and which meet such fuel efficiency requirements as DOE may by rule prescribe;

(13) Such other measures as DOE identifies by rule for purposes of this part as set forth in subpart D of 10 CFR part 450; and

(14) Such other measures as a grant applicant shows will save a substantial amount of energy and as are identified in an energy audit or energy use evaluation in accordance with §455.20(k) or a technical assistance report in accordance with §455.62.

Energy use evaluation means a determination of:

(1) Whether the building is a school facility, hospital facility, or a building owned and primarily occupied and used throughout the year by a unit of local government or by a public care institution.

(2) The name and address of the owner of record, indicating whether owned by a public institution, private nonprofit institution, or an Indian tribe;

(3) The building's potential suitability for renewable resource applications;

(4) Major changes in functional use or mode of operation planned in the next 15 years, such as demolition, disposal, rehabilitation, or conversion from office to warehouse;

(5) Appropriate energy conservation maintenance and operating procedures which have been implemented for the building;

(6) The need, if any, for the acquisition and installation of energy conservation measures including an assessment of the estimated costs and energy and cost savings likely to result from the purchase and installation of one or more energy conservation measures and an evaluation of the need and potential for retrofit based on consideration of one or more of the following:

(i) An energy use index or indices, for example, Btu's per gross square foot per year;

(ii) An energy cost index or indices, for example, annual energy costs per gross square foot; or

(iii) The physical characteristics of the building envelope and major energy-using systems; and

(7) Such other information as the State has determined useful or necessary, in accordance with §455.20(k).

Fuel means any commercial source of energy used within the building or complex being surveyed such as natural gas, fuel oil, electricity, or coal.

Governor means the chief executive officer of a State including the Mayor of the District of Columbia or a person duly designated in writing by the Governor to act on her or his behalf.

Grant program cycle means the period of time specified by DOE which relates to the fiscal year or years for which monies are appropriated for grants under this part, during which one complete cycle of DOE grant activity occurs including fund allocations to the States; applications receipt, review, approval, or disapproval; and award of grants by DOE but which does not include the grantee's performance period.

Grantee means the entity or organization named in the Notice of Financial Assistance Award as the recipient of the grant.

Gross square feet means the sum of all heated or cooled floor areas enclosed in a building, calculated from the outside dimensions or from the centerline of common walls.

Heating or cooling system means any mechanical system for heating, cooling, or ventilating areas of a building including a system of through-the-wall air conditioning units.

Heating degree days means the annual sum of the number of Fahrenheit degrees for each day's mean temperature below 65° for a given locality.

Hospital means a public or nonprofit institution which is a general hospital, tuberculosis hospital, or any other type of hospital other than a hospital furnishing primarily domiciliary care and which is duly authorized to provide hospital services under the laws of the State in which it is situated.

Hospital facilities means buildings housing a hospital and related facilities including laboratories, laundries, outpatient departments, nurses' residence and training facilities, and central service facilities operated in connection with a hospital; it also includes buildings containing education or training facilities for health profession personnel operated as an integral part of a hospital.

Indian tribe means any tribe, band, nation, or other organized group or community of Indians including any Alaska native village or regional or village corporation, as defined in or established pursuant to, the Alaska Native Claims Settlement Act, Public Law 92–203; 85 Stat. 688, which (a) is recognized as eligible for the special programs and services provided by the United States to Indians because of their status as Indians; or (b) is located on, or in proximity to, a Federal or State reservation or rancheria.

Load management system means a device or devices which are designed to shift energy use to hours of low demand in order to reduce energy costs and which do not cause more energy to be used than was used before their installation.

Local educational agency means a public board of education or other public authority or a nonprofit institution legally constituted within, or otherwise recognized by, a State either for administrative control or direction of, or to perform administrative services for, a group of schools within a State.

Maintenance means activities undertaken in a building to assure that equipment and energy-using systems operate effectively and efficiently.

Marketing means a program or activity managed or performed by the State including but not limited to:

(1) Obtaining non-Federal funds to finance energy conservation measures consistent with this part;

(2) Making site visits to school and hospital officials to review program opportunities;

(3) Giving presentations to groups such as school or hospital board officials and personnel; and

(4) Preparing and disseminating articles in publications directed to school and hospital personnel.

Native American means a person who is a member of an Indian tribe.

Non-Federal funds means financing sources obtained or arranged for by a State as a result of the State program(s) pursuant to § 455.20(j), to be used to pay for energy conservation measures for institutions eligible under this part, and includes petroleum violation escrow funds except for those funds required to be treated as if they were Federal funds by statute, court order, or settlement agreement.

Operating means the operation of equipment and energy-using systems in

a building to achieve or maintain specified levels of environmental conditions of service.

Owned or *owns* means property interest including without limitation a leasehold interest which is or shall become a fee simple title in a building or complex.

Preliminary energy audit means a determination of the energy consumption characteristics of a building including the size, type, rate of energy consumption, and major energy-using systems of such building which if paid for with financial assistance under this part, complies with 10 CFR 450.42.

Primarily occupied means that in excess of 50 percent of a building's square footage or time of occupancy is occupied by a public care institution or an office or agency of a unit of local government.

Program assistance means a program or activity managed or performed by the State and designed to provide support to eligible institutions to help ensure the effectiveness of energy conservation programs carried out consistent with this part including such relevant activities as:

(1) Evaluating the services and reports of consulting engineers;

(2) Training school or hospital personnel to perform energy accounting and to identify and implement energy conservation maintenance and operating procedures;

(3) Monitoring the implementation and operation of energy conservation measures; and

(4) Aiding in the procurement of energy-efficient equipment.

Public care institution means a public or nonprofit institution which owns:

(1) A facility for long-term care, rehabilitation facility, or public health center, as described in section 1624 of the Public Health Service Act (42 U.S.C. 300s–3; 88 Stat. 2270); or

(2) A residential child care center which is an institution, other than a foster home, operated by a public or nonprofit institution. It is primarily intended to provide full-time residential care, with an average length of stay of at least 30 days, for at least 10 minor persons who are in the care of such institution as a result of a finding of abandonment or neglect or of being persons in need of treatment or supervision.

Public or nonprofit institution means an institution owned and operated by:

(1) A State, a political subdivision of a State, or an agency or instrumentality of either; or

(2) A school or hospital which is, or would be in the case of such entities situated in American Samoa, Guam, the Commonwealth of Puerto Rico, the Commonwealth of the Northern Mariana Islands, and the U.S. Virgin Islands, exempt from income tax under section 501(c)(3) of the Internal Revenue Code of 1954; or

(3) A unit of local government or public care institution which is, or would be in the case of such entities situated in American Samoa, Guam, the Commonwealth of Puerto Rico, the Commonwealth of the Northern Mariana Islands, and the U.S. Virgin Islands, exempt from income tax under section 501(c)(3) or 501(c)(4) of the Internal Revenue Code of 1954.

Renewable resource energy conservation measure means an energy conservation measure which produces at least 50 percent of its Btu's from a non-depletable energy source.

School means a public or nonprofit institution which:

(1) Provides, and is legally authorized to provide, elementary education or secondary education, or both, on a day or residential basis;

(2) Provides, and is legally authorized to provide, a program of education beyond secondary education, on a day or residential basis and:

(i) Admits as students only persons having a certificate of graduation from a school providing secondary education, or the recognized equivalent of such certificate;

(ii) Is accredited by a nationally recognized accrediting agency or association; and

(iii) Provides an educational program for which it awards a bachelor's degree or higher degree or provides not less than a 2-year program which is acceptable for full credit toward such a degree at any institution which meets the preceding requirements and which provides such a program;

(3) Provides not less than a 1-year program of training to prepare students for gainful employment in a recognized occupation and which meets the provisions cited in paragraph (2), and subparagraphs (2)(i), and (2)(ii) of this definition; or

(4) Is a local educational agency.

School facilities means buildings housing classrooms, laboratories, dormitories, administrative facilities, athletic facilities, or related facilities operated in connection with a school.

Secretary means the Secretary of the Department of Energy or his/her designee.

State means, in addition to the several States of the Union, the District of Columbia, the Commonwealth of Puerto Rico, Guam, American Samoa, the Commonwealth of the Northern Mariana Islands, and the U.S. Virgin Islands.

State energy agency means the State agency responsible for developing State energy conservation plans pursuant to section 362 of the Energy Policy and Conservation Act (42 U.S.C. 6322) or, if no such agency exists, a State agency designated by the Governor of such State to prepare and submit the State Plan required under section 394 of the Energy Policy and Conservation Act.

State hospital facilities agency means an existing agency which is broadly representative of the public hospitals and the nonprofit hospitals or, if no such agency exists, an agency designated by the Governor of such State which conforms to the requirements of this definition.

State school facilities agency means an existing agency which is broadly representative of public institutions of higher education, nonprofit institutions of higher education, public elementary and secondary schools, nonprofit elementary and secondary schools, public vocational education institutions, nonprofit vocational education institutions, and the interests of handicapped persons in a State or, if no such agency exists, an agency which is designated by the Governor of such State which conforms to the requirements of this definition.

Support office director means the Director of the DOE field support office with the responsibility for grant administration or any official to whom that function may be redelegated.

Technical assistance means: (1) The conduct of specialized studies to identify and specify energy savings or energy cost savings that are likely to be realized as a result of the modification of maintenance and operating procedures in a building, the acquisition and installation of one or more specified energy conservation measures in a building, or both; and

(2) The planning or administration of such specialized studies. For schools and hospitals which are eligible to receive grants to carry out energy conservation measures, the term also means the planning or administration of specific remodeling, renovation, repair, replacement, or insulation projects related to the installation of energy conservation or renewable resource measures in a building.

Technical assistance program update means a brief revision to an existing technical assistance program report designed to provide current information such as that relating to energy use, equipment costs, and other data needed to substantiate an application for an energy conservation measure grant. Such an update shall be limited to the particular measures included in the related grant application together with any relevant data regarding interactions or relationships to previously installed energy conservation measures.

Unit of local government means the government of a county, municipality, parish, borough, or township which is a unit of general purpose government below the State (determined on the basis of the same principles as are used by the Bureau of the Census for general statistical purposes) and the District of Columbia. Such term also means the recognized governing body of an Indian tribe which governing body performs substantial governmental functions and includes libraries which serve all residents of a political subdivision below the State level (such as a community, district, or region) free of charge and which derive at least 40 percent of their operating funds from tax revenues of a taxing authority below the State level.

§ 455.3 Administration of grants.

Grants provided under this part shall comply with applicable law, regulation, or procedure including, without limitation, the requirements of:

(a) The DOE Financial Assistance Rules (10 CFR part 600 as amended) except as otherwise provided in this rule;

(b) Executive Order 12372 entitled ''Intergovernmental Review of Federal Programs'' (48 FR 3130, January 24, 1983; 3 CFR, 1982 Comp., p. 197) and the DOE regulation implementing this Executive Order entitled ''Intergovernmental Review of Department of Energy Programs and Activities'' (10 CFR part 1005);

(c) Office of Management and Budget Circular A–97 entitled ''Rules and Regulations Permitting Federal Agencies to Provide Specified or Technical Services to State and Local Units of Government under title III of the Inter-Governmental Coordination Act of 1968'' available from the Office of Management and Budget, Office of Publication Services, 725 17th Street, NW., Washington, DC 20503;

(d) DOE regulation entitled ''Nondiscrimination in Federally Assisted Programs'' (10 CFR part 1040) which implements the following public laws: Title VI of the Civil Rights Act of 1964; section 16 of the Federal Energy Administration Act of 1974; section 401 of the Energy Reorganization Act of 1974; title IX of the Education Amendments of 1972; The Age Discrimination Act of 1975; and section 504 of the Rehabilitation Act of 1973; and

(e) Such other procedures applicable to this part as DOE may from time to time prescribe for the administration of financial assistance.

§ 455.4 Recordkeeping.

Each State or other entity within a State receiving financial assistance under this part shall make and retain records required and specified by the DOE Financial Assistance Rules, 10 CFR part 600, and this part.

§ 455.5 Suspension and termination of grants.

Suspension and termination procedures shall be as set forth in the DOE Financial Assistance Rules, 10 CFR part 600.

Subpart B—State Plan Development and Approval

§ 455.20 Contents of State Plan.

Each State shall develop and submit to DOE a State Plan for technical assistance programs and energy conservation measures, including renewable resource measures and, to the extent appropriate, program assistance, and/or marketing. The State Plan shall include:

(a) A statement setting forth the procedures by which the views of eligible institutions or coordinating agencies representing such institutions, or both, were solicited and considered during development of the State Plan and any amendment to a State Plan;

(b) The procedures the State will follow to notify eligible institutions and coordinating agencies of the content of the approved State Plan or any approved amendment to a State Plan;

(c) The procedures the State will follow to notify eligible institutions and coordinating agencies of the availability (each funding cycle) of funding under this program and related funding available from non-Federal sources to fund technical assistance programs and energy conservation measures consistent with this part;

(d) The procedures for submittal of grant applications to the State;

(e) The procedures to be used by the State for evaluating and ranking technical assistance and energy conservation measure grant applications pursuant to § 455.130 and § 455.131, including the weights assigned to each criterion set forth in §§ 455.131 (c)(1), (c)(2), (c)(3), (c)(4) and (c)(5). In addition, the State shall determine the order of priority given to fuel types that include oil, natural gas, and electricity, under § 455.131(c)(2);

(f) The procedures that the State will follow to insure that funds will be allocated equitably among eligible applicants within the State including procedures to insure that funds will not be allocated on the basis of size or type of institution, but rather on the basis of relative need, taking into account such factors as cost, energy consumption, and energy savings, in accordance with § 455.131;

(g) The procedures that the States will follow for identifying schools and hospitals experiencing severe hardship and for apportioning the funds that are available for schools and hospitals in a case of severe hardship. Such policies and procedures shall be in accordance with § 455.132;

(h) A statement setting forth the extent to which, and by which methods, the State will encourage utilization of solar space heating, cooling and electric systems, and solar water heating systems;

(i) The procedures to assure that all financial assistance under this part will be expended in compliance with the requirements of the State Plan, in compliance with the requirements of this part, and in coordination with other State and Federal energy conservation programs;

(j) If a State is eligible and elects to use up to 100 percent of the funds provided by DOE under this part for any fiscal year for program and technical assistance and/or up to 50 percent of such funds for marketing:

(1) A description of each activity the State proposes, including the procedures for program operation, monitoring, and evaluation;

(2) The level of funding to be used for each program and the source of those funds;

(3) The amount of the State's allocated funds that the State proposes to use for each;

(4) A description of the non-Federal financing mechanisms to be used to fund energy conservation measures in the State during the fiscal year;

(5) A description of the evaluation/selection criteria to be used by the State in determining which institutions receive funding for energy conservation measures;

(6) The procedures for assuring that all segments of the State's eligible institutions, including religiously affiliated institutions receive an equitable share of the assistance provided both for program and technical assistance, marketing, and energy conservation measures;

(7) A description of how the State will track: the amount of total available funds by source; the amount of funds obligated against those funds; and any limits on types of institutions eligible for particular funding sources; and

(8) The procedures for assisting institutions which initially receive program, technical, or marketing assistance (as part of the State's special program(s)) in later participating in the State's program(s) to provide energy conservation measure funding;

(k) The requirements for an energy audit or an energy use evaluation, and the requirements for qualifications for auditors or persons who will conduct energy use evaluations in the State;

(l) With regard to energy conservation maintenance and operating procedures:

(1) The procedures to insure implementation of energy conservation maintenance and operating procedures in those buildings for which financial assistance is requested under this part;

(2) A provision that all maintenance and operating procedure changes recommended in an energy audit pursuant to § 455.20(k), or in a technical assistance report under § 455.62, or a combination of these are implemented as provided under this part; or

(3) An assurance that the maintenance and operating procedures will be implemented in the future, or a reasonable justification for not implementing such procedures, as appropriate;

(m) The procedures to assure that financial assistance under this part will be used to supplement, and not to supplant, State, local or other funds, including at least:

(1) The screening of applicants for eligibility for available State funds;

(2) The identification of applicants which are seeking or have obtained private sector funds; and,

(3) Limiting or excluding (at the option of the State) the availability of financial assistance under this part for funding particular measures for which funding is being provided by other sources in the State (such as utility rebates) together with any requirements for potential applicants to first seek other sources of funding and document the results of that attempt before seeking financial assistance under this part and a description of the State's plan to

assist potential applicants in identifying and obtaining other sources of funding;

(n) The procedures for determining that technical assistance programs performed without the use of Federal funds and used as the basis for energy conservation measure grant applications have been performed in compliance with the requirements of § 455.62, for the purposes of satisfying the eligibility requirements contained in § 455.71(a)(3);

(o) The State's policy regarding reasonable selection of energy conservation measures for study in a technical assistance program including any restrictions based on category of building or on groups of structures where measures may, or may not, be appropriate for all the structures and any additional State requirements for the conduct of such a program;

(p) The procedures for State management, monitoring, and evaluation of technical assistance programs and energy conservation measures receiving financial assistance under this part. This includes any State requirements for hospital certifications from a State agency with descriptions of the review procedures and coordination process applicable in such cases. If there is no school facilities agency in the State, or if the existing agency does not certify all types of schools, it also includes any State requirements for an alternative review and certification process for schools;

(q) The circumstances under which the State requires an updated technical assistance program report to accompany an application for an energy conservation measure grant and the scope and contents of such an update;

(r) A description of the State's policies for establishing and insuring compliance with qualifications for technical assistance analysts. Such policies shall require that technical assistance analysts be free from financial interests which may conflict with the proper performance of their duties and have experience in energy conservation and:

(1) Be a registered professional engineer licensed under the regulatory authority of the State;

(2) Be an architect-engineer team, the principal members of which are licensed under the regulatory authority of the State; or

(3) Be otherwise qualified in accordance with such criteria as the State may prescribe in its State Plan to insure that individuals conducting technical assistance programs possess the appropriate training and experience in building energy systems;

(s) The circumstances under which the State will or will not consider accepting applications for technical assistance programs or energy conservation measures which were included in earlier approved grant awards but which were not implemented and for which no funds were expended after the original grant award;

(t) A statement setting forth:

(1) An estimate of energy savings which may result from the modification of maintenance and operating procedures and installation of energy conservation measures;

(2) A recommendation as to the types of energy conservation measures considered appropriate within the State; and

(3) An estimate of the costs of carrying out technical assistance and energy conservation measure programs;

(u) For purposes of the technical assistance program pursuant to § 455.62:

(1) A statement setting forth uniform conversion factors to be used by all grant applicants in the technical assistance analysis for conversion of fuels to Btu equivalents. For the conversion of kilowatt hours to Btus, the State may use 3,413, representing consumption at the consumer's end, or 11,600, representing consumption at the producer's end, or may assign 3,413 to some types of energy conservation measures and 11,600 to other types of measures in which case the State shall specify the conversion factor to be used for each type of measure, providing a rationale and citing the sources used in making this decision, and the State shall always apply the specified factor consistently to all ECMs of a particular type;

(2) A statement setting forth the cost-effectiveness testing approach to be used to evaluate energy conservation measures pursuant to § 455.63. States may select either the simple payback approach or the life-cycle

costing approach. Only one approach may be used for all technical assistance programs in the State. If the State elects to use the life-cycle costing approach, it must specify, consistent with § 455.64(g), whether it will use DOE-provided or its own energy cost escalation rate or annual discount rate, together with any other procedures required to be used (in addition to those specified in § 455.64); and

(3) A statement setting forth that 50 percent (or a higher percent) of total cost savings (used in calculating cost effectiveness pursuant to § 455.63(a)(1) for simple payback, or § 455.64(c) for life-cycle costing) must be from the cost of the energy to be saved.

(v) For any coordinating agency, a description of how it will operate including but not limited to:

(1) Name and address;

(2) Type of institutions covered;

(3) Application processing procedures;

(4) Whether TA applications, ECM applications, or both are covered;

(5) Intended schedule for soliciting and processing applications;

(6) Any special provisions for religiously affiliated institutions;

(7) Nature of subagreement to be used with institutions;

(8) Whether TA or ECM contractors selected by the coordinating agency will be offered incident to, or as a condition in, subagreements; and

(9) Other significant policies and procedures;

(w) If a State elects to allow credit toward the cost share for an energy conservation measure for the costs of technical assistance programs, technical assistance program updates, or energy conservation measures previously incurred and wholly paid for with non-Federal funds, the policies regarding such credit, including any time limits for the age of the earlier-funded work being proposed for credit; and

(x) The limit to the Federal share to be provided to applicants in the State if a State elects to provide less than a 50 percent Federal share to its applicants that do not qualify for severe hardship.

§ 455.21 Submission and approval of State Plans and State Plan amendments.

(a) Proposed State Plans or Plan amendments necessitated by a change in regulations shall be submitted to DOE within 90 days of the effective date of this subpart or any amended regulations. Upon request by a State, and for good cause shown, DOE may grant an extension of time.

(b) The Support Office Director shall, within 60 days of receipt of a proposed State Plan, review each plan and, if it is reasonable and found to conform to the requirements of this part, approve the State Plan. If the Support Office Director does not disapprove a State Plan within the 60-day period, the State Plan will be deemed to have been approved.

(c) If the Support Office Director determines that a proposed State Plan fails to comply with the requirements of this part or is not reasonable, DOE shall return the plan to the State with a statement setting forth the reasons for disapproval.

(d) Except for State Plan amendments covered by paragraph (a) of this section, if a State wishes to deviate from its approved State Plan, the State must submit and obtain DOE approval of the State Plan amendment.

(e) The Support Office Director shall, within 60 days or less of receipt of a proposed State Plan amendment review each amendment and, if it is found to conform to the requirements of this part, approve the amendment. If the Support Office Director determines that a proposed State Plan amendment fails to comply with the requirements of this part, or is not reasonable, DOE shall return the amendment to the State with a statement setting forth the reasons for disapproval.

Subpart C—Allocation of Appropriations Among the States

§ 455.30 Allocation of funds.

(a) DOE will allocate available funds among the States for two purposes: to award grants to schools, hospitals, units of local government, and public care institutions and coordinating agencies representing them to implement technical assistance and energy

conservation measures grant programs and to award grants to eligible States for administrative expenses, technical assistance programs, program assistance, and marketing expenses in accordance with this part.

(b) DOE shall notify each Governor of the total amount allocated for grants within the State for any grant program cycle:

(1) For schools and hospitals, the allocation amount shall be for technical assistance programs, subject to any limitation placed on technical assistance, and energy conservation measures;

(2) For States that are eligible pursuant to § 455.91, up to 100 percent of the funds allocated to the State by DOE may be used for technical assistance programs and/or for program assistance and up to 50 percent of the funds allocated to the State by DOE may be used for marketing as defined in § 455.2;

(3) For States eligible under § 455.81, a portion of the allocation may be used for a grant to the State for administrative expenses as described in § 455.120;

(4) For unit of local government and public care institutions, the allocation amount shall be solely for technical assistance programs; and

(5) For coordinating agencies, the allocation amount shall be for either technical assistance programs subject to any limitation placed on technical assistance, or energy conservation measures, or both depending on how the coordinating agency elects to operate.

(c) DOE shall notify each Governor of the period for which funds allocated for a grant program cycle will be made available for grants within the State.

(d) Each State shall make available up to 10 percent of its allocation for schools and hospitals in each grant program cycle to provide financial assistance, not to exceed a 90 percent Federal share, for technical assistance programs and energy conservation measures for schools and hospitals determined to be in a class of severe hardship. Such determinations shall be made in accordance with § 455.132.

§ 455.31 Allocation formulas.

(a) Financial assistance for conducting technical assistance programs for units of local government and public care institutions shall be allocated among the States by multiplying the sum available by the allocation factor set forth in paragraph (c) of this section.

(b) Financial assistance for conducting technical assistance programs and acquiring and installing energy conservation measures, including renewable resource measures, for schools and hospitals, shall be allocated among the States by multiplying the sum available by the allocation factor set forth in paragraph (c) of this section.

(c) The allocation factor (K) shall be determined by the formula:

$$K = \frac{0.07}{N} + 0.1\frac{(Sfc)}{(Nfc)} + 0.83\frac{(SP)(SC)}{(NPC)}$$

where, as determined by DOE:

(1) Sfc is the projected average retail cost per million Btu's of energy consumed within the region in which the State is located as contained in current regional energy cost projections obtained from DOE.

(2) Nfc is the summation of the Sfc numerators for all States;

(3) N is the total number of eligible States;

(4) SP is the population of the State;

(5) SC is the sum of the State's heating and cooling degree days; and

(6) NPC is the summation of the (SP)(SC) numerators for all States.

(d) Except for the District of Columbia, Puerto Rico, Guam, American Samoa, the Commonwealth of the Northern Mariana Islands, and the U.S. Virgin Islands, no allocation available to any State may be less than 0.5 percent of all amounts allocated in any grant program cycle. No State will be allocated more than 10 percent of the funds allocated in any grant program cycle.

§ 455.32 Reallocation of funds.

(a) If a State Plan has not been approved and implemented by a State by the close of the period for which allocated funds are available as set forth in the notice issued by DOE pursuant to § 455.30(c), funds allocated to that State for technical assistance and energy

conservation measures will be reallocated among all States for the next grant program cycle, if available.

(b) Funds which have been allocated to States in a grant program cycle but which have not been obligated to eligible State, school, or hospital grant applicants by the end of that cycle shall be reallocated by DOE among all States in the next grant program cycle.

(c) Funds which become available due to deobligations resulting from funds returned by grantees due to cost underruns or scope-of-work reductions on completed projects shall be reallocated by DOE among all States in the next grant program cycle.

(d) Funds which become available because of declined grants to schools and hospitals within a State may be reobligated to other eligible applicants in the State until the December 31 following the close of the cycle for which the funds were allocated to the State. Such funds which have not been reobligated by that deadline shall be reallocated by DOE among all States in the next grant program cycle.

(e) Funds which become available because of declined or deobligated financial assistance provided through coordinating agencies to schools and hospitals within a State may be reobligated to other eligible applicants in the State until the December 31 following the close of the cycle for which the funds were allocated to the coordinating agency. Such funds which have not been reobligated by that deadline shall be reallocated by DOE among all States in the next grant program cycle.

(f) Funds granted to States for technical assistance, program assistance, and marketing pursuant to § 455.144 are subject to reallocation by DOE among all the States in the next program cycle if such funds are not committed by the State to their intended purposes by means of grants, contracts, or other legally binding obligations, or redirected to schools and hospitals grant applications pursuant to § 455.144(d), by the December 31 following the close of the cycle for which the funds were allocated to the State.

Subpart D—Preliminary Energy Audit and Energy Audit Grants [Reserved]

Subpart E—Technical Assistance Programs for Schools, Hospitals, Units of Local Government, and Public Care Institutions

§ 455.60 Purpose.

This subpart specifies what constitutes a technical assistance program eligible for financial assistance under this part and sets forth the eligibility criteria for schools, hospitals, units of local government, and public care institutions to receive grants for technical assistance to be performed in buildings owned by such institutions.

§ 455.61 Eligibility.

To be eligible to receive financial assistance for a technical assistance program, an applicant must:

(a) Be a school, hospital, unit of local government, public care institution, or coordinating agency representing them except that financial assistance for units of local government and public care institutions will be provided only for buildings which are owned and primarily occupied by offices or agencies of a unit of local government or public care institution and which are not intended for seasonal use and not utilized primarily as a school or hospital eligible for assistance under this program;

(b) Be located in a State which has an approved State Plan as described in subpart B of this part;

(c) Have conducted an energy audit or an energy use evaluation required pursuant to § 455.20(k) and adequate to estimate energy conservation potential for the building for which financial assistance is to be requested, subsequent to the most recent construction, reconfiguration, or utilization change which significantly modified energy use within the building;

(d) If an energy audit has been performed, give assurance that it has implemented all energy conservation maintenance and operating procedures required pursuant to § 455.20(k) or provide a written justification for not implementing them pursuant to § 455.20(l)(3); and

(e) Submit an application in accordance with the provisions of this part and the approved State Plan.

§ 455.62 Contents of a technical assistance program.

(a) The purpose of a technical assistance program is to provide a report based on an on-site analysis of the building which meets the requirements of this section and the State's procedures for implementing this section.

(b) A technical assistance program shall be designed to identify and document energy conservation maintenance and operating procedure changes and energy conservation measures in sufficient detail to support possible application for an energy conservation measure grant and to provide reviewers and decision makers handling such applications sufficient information upon which to base a judgment as to their reasonableness and a decision whether to pursue any or all of the recommended improvements.

(c) A technical assistance program shall be conducted by a technical assistance analyst who has the qualifications established in the State Plan in accordance with § 455.20(r).

(d) At the conclusion of a technical assistance program, the technical assistance analyst shall prepare a report which shall include:

(1) A description of building characteristics and energy data including:

(i) The results of the energy audit or energy use evaluation of the building together with a statement as to the accuracy and completeness of the energy audit or energy use evaluation data and recommendations;

(ii) The operation characteristics of energy-using systems; and

(iii) The estimated remaining useful life of the building;

(2) An analysis of the estimated energy consumption of the building, by fuel type in total Btus and Btu/sq.ft./yr., using conversion factors prescribed by the State in the State Plan, at optimum efficiency (assuming implementation of all energy conservation maintenance and operating procedures);

(3) A description and analysis of all identified energy conservation maintenance and operating procedure changes, if any, and energy conservation measures selected in accordance with the State Plan, including renewable resource measures, setting forth:

(i) A description of each energy conservation maintenance and operating procedure change and an estimate of the costs of adopting such energy conservation maintenance and operating procedure changes;

(ii) An estimate of the cost of design, acquisition and installation of each energy conservation measure, discussing pertinent assumptions as necessary;

(iii) Estimated useful life of each energy conservation measure;

(iv) An estimate of any increases or decreases in maintenance and operating costs that would result from each conservation measure, if relevant to the cost effectiveness test applicable under this part;

(v) An estimate of any significant salvage value or disposal cost of each energy conservation measure at the end of its useful life if relevant to the cost effectiveness test applicable under this part;

(vi) An estimate, supported by all data and assumptions used in arriving at the estimate, of the annual energy savings, the annual cost of energy to be saved, and total annual cost savings using current energy prices including demand charges expected from each energy conservation maintenance and operating procedure change and the acquisition and installation of each energy conservation measure. In calculating the potential annual energy savings, annual cost of energy to be saved, or total annual cost savings of each energy conservation measure, including renewable resource measures, the technical assistance analyst shall:

(A) Assume that all energy savings obtained from energy conservation maintenance and operating procedures have been realized;

(B) Calculate the total annual energy savings, annual cost of energy to be saved, and total annual cost savings, by fuel type, expected to result from the acquisition and installation of the energy conservation measures, taking into account the interaction among the various measures;

(C) Calculate that portion of the total annual energy savings, annual cost of energy to be saved, and total annual cost savings, as determined in paragraph (d)(3)(vi)(B) of this section,

attributable to each individual energy conservation measure; and

(D) Consider climate and other variables;

(vii) An analysis of the cost effectiveness of each energy conservation measure consistent with § 455.63 and, if applicable, § 455.64 of this part;

(viii) The estimated cost of the measure, which shall be the total cost for design and other professional service (excluding the cost of a technical assistance program), if any, and acquisition and installation costs. If required by the State in its State Plan, or if requested by the applicant, the technical assistance report shall provide a life-cycle cost analysis which is consistent with § 455.64 and states the discount and energy cost escalation rates that were used;

(ix) The simple payback period of each energy conservation measure, calculated pursuant to § 455.63(a);

(4) Energy use and cost data, actual or estimated, for each fuel type used for the prior 12-month period, by month, if possible;

(5) Documentation of demand charges paid by the institution for the prior 12-month period, by month if possible, when demand charges are included in current energy prices or when the technical assistance report recommends an energy conservation measure that shifts energy usage to periods of lower demand and cost; and

(6) A signed and dated certification that the technical assistance program has been conducted in accordance with the requirements of this section and that the data presented is accurate to the best of the technical assistance analyst's knowledge.

§ 455.63 Cost-effectiveness testing.

(a) This paragraph applies to calculation of the simple payback period of energy conservation measures.

(1) The simple payback period of each energy conservation measure (except measures to shift demand, or renewable resource measures) shall be calculated, taking into account the interactions among the various measures, by dividing the estimated total cost of the measure, as determined pursuant to § 455.62(d)(3)(ii), by the estimated annual cost savings accruing from the measure (adjusted for demand charges), as determined pursuant to § 455.62(d)(3)(vi), provided that:

(i) At least 50 percent of the annual cost savings used in this calculation shall be from the cost of the energy to be saved or a higher percent if required by a State in its State Plan pursuant to § 455.20(u)(3); and

(ii) No more than 50 percent of the annual cost savings used in this calculation shall be from other cost savings, such as those resulting from energy conservation maintenance and operating procedures related to particular energy conservation measures, or from changes in type of fuel used, or a lower percent if required by a State in its State Plan pursuant to § 455.20(u)(3).

(2) The simple payback period of each renewable resource energy conservation measure shall be calculated, taking into account the interactions among the various measures, by dividing the estimated total cost of the measure, as determined pursuant to § 455.62(d)(3)(ii), by the estimated annual cost savings accruing from the measure taking into account at least the annual cost of the non-renewable fuels displaced less the annual cost of the renewable fuel, if any, and the annual cost of any backup non-renewable fuel needed to operate the system, adjusted for demand charges, as determined pursuant to § 455.62(d)(3)(vi).

(3) The simple payback period of each energy conservation measure designed to shift demand to a period of lower demand and lower cost shall be calculated, taking into account the interactions among the various measures, by dividing the estimated total cost of the measure, as determined pursuant to § 455.62(d)(3)(ii), by the estimated annual cost savings accruing from the measure taking into account at least the annual cost of the energy used before the measure is installed less the estimated annual cost of the energy to be used after the measure is installed, adjusted for demand charges, as determined pursuant to § 455.62(d)(3)(vi).

(b) This paragraph applies, in addition to paragraph (a) of this section, if the State plan requires the cost effectiveness of an energy conservation measure to be determined by life-cycle

cost analysis or if the applicant requests such an analysis.

(1) A life-cycle cost analysis, showing a savings-to-investment ratio greater than or equal to one over the useful life of the energy conservation measure or 15 years, whichever is less, shall be conducted in accordance with the requirements set forth in the State Plan pursuant to §§ 455.20(u)(2), 455.20(u)(3) and § 455.64.

(2) The resulting savings-to-investment ratio shall be used for the purpose of ranking applications.

§ 455.64 Life-cycle cost methodology.

(a) The life-cycle cost methodology under § 455.63(b) of this part is a systematic comparison of the relevant significant cost savings and costs associated with an energy conservation measure over its expected useful life, or other appropriate study period with future cost savings and costs discounted to present value. The format for displaying life-cycle costs shall be a savings-to-investment ratio.

(b) An energy conservation measure must be cost effective, and its savings-to-investment ratio must be greater than or equal to one no earlier than the end of the second year of the study period.

(c) A savings-to-investment ratio is the ratio of the present value of net cost savings attributable to an energy conservation measure to the present value of the net increase in investment, maintenance and operating, and replacement costs less salvage value or disposal cost attributable to that measure over a study period.

(d) Except for energy conservation measures to shift demand or to use renewable energy resources, the numerator of the savings-to-investment ratio shall include net cost savings, appropriately discounted and adjusted for energy cost escalation consistent with paragraph (g) of this section, subject to the limitation that the cost of the energy to be saved shall constitute at least 50 percent of the net cost savings unless the State specifies a higher percent in its State plan pursuant to § 455.20(u)(3).

(e) With respect to energy conservation measures to shift demand or to use renewable energy resources, the numerator of the savings-to-investment ratio shall be net cost savings appropriately discounted and adjusted for energy cost escalation consistent with paragraph (g) of this section.

(f) The study period for a life-cycle cost analysis, which may not exceed 15 years, shall be the useful life of the energy conservation measure or of the energy conservation measure with the longest life (for purposes of ranking buildings with multiple energy conservation measures).

(g) The discount rate must equal or exceed the discount rate annually provided by DOE under 10 CFR part 436. The energy cost escalation rates must not exceed those annually provided by DOE under 10 CFR part 436.

(h) Investment costs may be assumed to be a lump sum occurring at the beginning of the base year, or to the extent that there are future investment costs, discounted to present value.

(i) The cost of energy and maintenance and operating costs may be assumed to begin to accrue at the beginning of the base year or when they are actually projected to occur.

(j) It may be assumed that costs occur in a lump sum at any time within the year in which they are incurred.

Subpart F—Energy Conservation Measures for Schools and Hospitals

§ 455.70 Purpose.

This subpart sets forth the eligibility criteria for schools and hospitals to receive grants for energy conservation measures, including renewable resource measures, and the elements of an energy conservation measure program.

§ 455.71 Eligibility.

(a) To be eligible to receive financial assistance for an energy conservation measure, including renewable resource measures, an applicant must:

(1) Be a school, hospital, or coordinating agency representing them as defined in § 455.2;

(2) Be located in a State which has an approved State Plan as described in subpart B of this part;

(3) Have completed a technical assistance program consistent with § 455.62,

as determined by the State in accordance with the State Plan, for the building for which financial assistance is to be requested subsequent to the most recent construction, reconfiguration, or utilization change to the building which significantly modified energy use within the building;

(4) Have completed an updated technical assistance program if required in the State Plan as specified in § 455.20(q);

(5) Have implemented all energy conservation maintenance and operating procedures which are identified as the result of a technical assistance program or have provided pursuant to the State plan a satisfactory written justification for not implementing any specific maintenance and operating procedures so identified;

(6) Have met any requirements set forth in the State Plan pursuant to § 455.20(m) regarding the avoidance of supplanting other funds in the financing of energy conservation measures under this part;

(7) Have no plan or intention at the time of application to close or otherwise dispose of the building for which financial assistance is to be requested within the simple payback period or useful life (depending on the State's requirement for determining cost effectiveness) of any energy conservation measure recommended for that building; and

(8) Submit an application in accordance with the provisions of this part and the approved State Plan;

(b) To be eligible for financial assistance:

(1) In States where simple payback has been selected as the cost-effectiveness test pursuant to § 455.20(u)(2), the simple payback period of each energy conservation measure for which financial assistance is requested shall not be less than 2 years nor greater than 10 years, and the estimated useful life of the measure shall be greater than its simple payback period; or

(2) In States where life-cycle costing has been selected as the cost-effectiveness test pursuant to § 455.20(u)(2), the savings-to-investment ratio of each energy conservation measure must be greater than or equal to one under § 455.63(b)(1), over a period for analysis which does not exceed 15 years, and the useful life of the energy conservation measure must be at least 2 years.

(c) Leased equipment is not eligible for financial assistance under this part. Equipment which becomes the property of the grantee at the conclusion of a long-term purchase agreement without any additional payment is eligible.

§ 455.72 Scope of the grant.

Financial assistance awarded under this subpart may be expended for the design (excluding design costs funded under the technical assistance program), acquisition, and installation of energy conservation measures to reduce energy consumption or measures to allow the use of renewable resources in schools and hospitals or to shift energy usage to periods of low demand and cost. Such measures include, but are not necessarily limited to, those included in the definition of ''energy conservation measure'' in § 455.2.

Subpart G—State Administrative Expenses

§ 455.80 Purpose.

This subpart describes what constitutes a State administrative expense that may receive financial assistance under this part and sets forth the eligibility criteria for States to receive grants for administrative expenses.

§ 455.81 Eligibility.

To be eligible to receive financial assistance for administrative expenses, a State must:

(a) Have in place a State Plan approved by DOE pursuant to § 455.21 and

(b) Be operating a program to provide technical assistance and energy conservation measure grants, or technical assistance, program assistance, and marketing (where energy conservation measures are funded non-Federally) to eligible institutions pursuant to this part.

§ 455.82 Scope of the grant.

A State's administrative expenses shall be limited to those directly related to administration of technical assistance programs, program assistance and marketing programs, and energy

conservation measures including costs associated with:

(a) Personnel whose time is expended directly in support of such administration;

(b) Supplies and services expended directly in support of such administration;

(c) Equipment purchased or acquired solely for and utilized directly in support of such administration, subject to 10 CFR 600.436;

(d) Printing, directly in support of such administration; and

(e) Travel, directly related to such administration.

Subpart H—State Grants for Technical Assistance, Program Assistance, and Marketing

§ 455.90 Purpose.

This subpart describes what constitutes a State program for technical assistance, program assistance, and marketing that may receive financial assistance under this part and sets forth the eligibility criteria for States to receive grants for technical assistance, program assistance, and marketing.

§ 455.91 Eligibility.

To be eligible to receive financial assistance for technical assistance, program assistance, and marketing, a State must:

(a) Have in place a State Plan approved by DOE which includes a description of the State's program or programs to provide technical assistance, program assistance, and marketing, pursuant to § 455.20(j)(1);

(b) Have established a program consistent with this part to fund, from non-Federal sources, energy conservation measures for eligible institutions; and

(c) Provide to DOE a certification pursuant to § 455.122.

§ 455.92 State technical assistance awards.

Technical assistance awards by States under this subpart are subject to all requirements of this part which apply to DOE-awarded technical assistance program grants except that States:

(a) Are not required to award the funds in grant instruments;

(b) May award the funds throughout the fiscal year subject to § 455.144(a)(3); and

(c) Are not required to rank applications under § 455.131(b) of this part.

Subpart I—Cost Sharing

§ 455.100 Limits to Federal share.

Amounts made available under this part, together with any other amounts made available from other Federal sources, may not be used to pay more than 50 percent of the costs of technical assistance programs and energy conservation measures unless the grantee qualifies for the exceptions specified in §§ 455.141(a), 455.142(a), 455.142(b), or for severe hardship assistance specified in § 455.142(c). In cases of severe hardship, the Federal share of the cost cannot exceed 90 percent.

§ 455.101 Borrowing the non-Federal share/title to equipment.

The non-Federal share of the costs of acquiring and installing energy conservation measures may be provided by using financing or other forms of borrowed funds, such as those provided by loans and performance contracts, even if such financing does not provide for the grantee to receive clear title to the equipment being financed until after the grant is closed out. However, grantees in such cases must otherwise meet all the requirements of this part, and financing and loan agreements and performance contracts under this section are subject to the requirements of 10 CFR part 600 and the certification requirements under § 455.111(e). Grantees must receive clear title to the equipment when the loan is paid off.

§ 455.102 Energy conservation measure cost-share credit.

To the extent a State provides in its State Plan, DOE may wholly or partially credit the costs of the following, with respect to a building, toward the required cost-share for an energy conservation measure grant in that building:

(a) A non-Federally funded technical assistance program;

(b) A non-Federally funded technical assistance program update to comply with § 455.20(q); and

(c) The non-Federally funded implementation of one or more energy conservation measures, which complies with the eligibility criteria set forth in § 455.71.

§ 455.103 Requirements for applications for credit.

(a) If a State has provided for credit in its State Plan pursuant to § 455.20(w), applications for credit will be considered only when the technical assistance programs or updates and the energy conservation measure projects for which credit is sought meet the applicable program requirements, such as those specified in § 455.61, § 455.62, § 455.71, and the relevant sections of 10 CFR part 600, except that the project need not comply with the Davis-Bacon Act regarding labor standards or wage rates.

(b) Credit for energy conservation measures will be considered only when supported by a technical assistance analysis that meets the requirements of § 455.62 and that was performed prior to the installation of the energy conservation measures.

§ 455.104 Rebates from utilities and other entities.

(a) Grantees which receive rebates or other monetary considerations from utilities or other entities for installing the energy conservation measures funded by a grant under this part may use such funds to meet their cost- sharing obligations pursuant to § 455.100.

(b) Where the rebate or monetary consideration does not exceed the non-Federal share of the cost of the measures applied for in a grant application, grantees are not required to deduct the amount of the rebate or monetary consideration from the cost of the measures, and DOE does not consider such rebates or monetary considerations to be program income which would have to be remitted to DOE upon receipt by the grantee.

(c) Where the rebate or monetary consideration does exceed the non-Federal share of the cost of the measures applied for in a grant application, grantees may use the excess to fund additional measures if such measures have been recommended in the technical assistance report. If it is not possible to use the excess funding in this way, the grantee must reduce the cost—and DOE will reduce the Federal share—by the amount of the excess above the non-Federal share.

Subpart J—Applicant Responsibilities—Grants to Institutions and Coordinating Agencies

§ 455.110 Grant application submittals for technical assistance and energy conservation measures.

(a) Each eligible applicant desiring to receive financial assistance (either from DOE directly, through a State serving as a coordinating agency, or through another organization serving as a coordinating agency) shall file an application in accordance with the provisions of this subpart and the approved State Plan of the State in which such building is located. The application, which may be amended in accordance with applicable State procedures at any time prior to the State's final determination thereon, shall be filed with the State energy agency designated in the State Plan. Coordinating agencies shall file a single application with DOE which includes all of the information required below for each building for which assistance has been requested and to which is attached a copy of each application from each building owner.

(b) Applications from schools, hospitals, units of local government, public care institutions, and coordinating agencies for financial assistance for technical assistance programs shall include the certifications contained in § 455.111 and:

(1) The applicant's name and mailing address;

(2) The energy audit or energy use evaluation required by the State pursuant to § 455.20(k) for each building for which financial assistance is requested;

(3) A project budget, by building, which stipulates the intended use of all Federal and non-Federal funds, including in-kind contributions (valued in accordance with the guidelines in 10 CFR part 600), to be used to meet the cost-

sharing requirements described in subpart I of this part;

(4) A brief description, by building, of the proposed technical assistance program, including a schedule, with appropriate milestone dates, for completing the technical assistance program;

(5) Additional information required by the applicable State Plan and any other information which the applicant desires to have considered, such as information to support an application from a school or hospital for financial assistance in excess of the 50 percent Federal share on the basis of severe hardship or an application which proposes the use of Federal funds, paid under and authorized by another Federal agreement to meet cost sharing requirements.

(c) Applications from schools and hospitals and coordinating agencies for financial assistance for energy conservation measures, including renewable resource measures, shall include the certifications contained in §455.111 and:

(1) The applicant's name and mailing address;

(2) A description of each building for which financial assistance is requested sufficient to determine the building's eligibility, ownership, use, and size in gross square feet;

(3) A project budget, by measure or building, as provided in the State Plan which stipulates the intended use of all Federal and non-Federal funds and identifies the sources and amounts of non-Federal funds, including in-kind contributions (valued in accordance with the guidelines in 10 CFR part 600) to be used to meet the cost-sharing requirements described in subpart I of this part;

(4) A schedule, including appropriate milestone dates, for the completion of the design, acquisition, and installation of the proposed energy conservation measures for each building;

(5) For each energy conservation measure proposed for funding, the projected cost, the projected simple payback period, and if appropriate, the life-cycle cost savings-to-investment ratio calculated under §455.64. Applications with more than one energy conservation measure per building shall include projected costs and paybacks, and if appropriate, the savings-to-investment ratios for each measure and the average simple payback period or overall savings-to-investment ratio for all measures proposed for the building;

(6) The report of the technical assistance analyst (unless waived by DOE because the report is already in its possession). This report must have been completed since the most recent construction, reconfiguration, or utilization change to the building which significantly modified energy use, for each building;

(7) An update of the technical assistance program report if required by the State in its State Plan and as specified in §455.20(q);

(8) If the applicant is aware of any adverse environmental impact which may arise from adoption of any energy conservation measure, an analysis of that impact and the applicant's plan to minimize or avoid such impact; and

(9) Additional information required by the applicable State Plan, and any additional information which the applicant desires to have considered, such as information to support an application for financial assistance in excess of the non-Federal share set forth in the State plan on the basis of severe hardship, or an application which proposes the use of Federal funds paid under and authorized by another Federal agreement to meet cost sharing requirements.

§455.111 Applicant certifications for technical assistance and energy conservation measure grants to institutions and coordinating agencies.

Applications for financial assistance for technical assistance programs and energy conservation measures, including renewable resource measures, shall include certification that the applicant:

(a) Is eligible under §455.61 for technical assistance or §455.71 for energy conservation measures;

(b) Has satisfied the requirements set forth in §455.110;

(c) For applications for technical assistance, has implemented all energy conservation maintenance and operating procedures recommended in the energy audit pursuant to §455.20(k), if done, and for applications for energy

conservation measures, those recommended in the report obtained under a technical assistance program pursuant to § 455.62. If any such procedure has not been implemented, the application shall contain a satisfactory written justification consistent with the State plan for not implementing that procedure;

(d) Will obtain from the technical assistance analyst, before the analyst performs any work in connection with a technical assistance program or energy conservation measure, a signed statement certifying that the technical assistance analyst has no conflicting financial interest and is otherwise qualified to perform the duties of technical assistance analyst in accordance with the standards and criteria established in the approved State Plan;

(e) When using borrowed funds for the non-Federal share of an energy conservation project where a lien is placed by the lender on equipment funded under the grant, will obtain clauses in the financing contract:

(1) Stating the percent of DOE interest in the equipment (i.e., the percent of the total cost provided by the grant); and

(2) Requiring lender notification, with certified return receipt requested, to the applicable Support Office Director of the filing of a lawsuit seeking a remedy for a default; and

(f) Will comply with all reporting requirements contained in § 455.113.

§ 455.112 Davis-Bacon wage rate requirement.

When an energy conservation measure or group of measures in a building, funded under this part, has a total estimated cost for acquisition and installation of more than $5,000, any construction contract or subcontract in excess of $2,000, using any grant funds awarded under this part must include:

(a) Those contract labor standards provisions set forth in 29 CFR 5.5 and

(b) A provision for payment of laborers and mechanics at the minimum wage rates determined by the Secretary of Labor in accordance with the Davis-Bacon Act (40 U.S.C. 276a) as set forth in 29 CFR part 1.

§ 455.113 Grantee records and reports for technical assistance and energy conservation measure grants to institutions and coordinating agencies.

(a) Each unit of local government or public care institution which receives a grant for a technical assistance program and each school, hospital, and coordinating agency which receives a grant for a technical assistance program or an energy conservation measure, including renewable resource measures, shall keep all the records required by § 455.4 in accordance with this part and the DOE Financial Assistance Rules.

(b) Each grantee shall submit reports as follows:

(1) For technical assistance programs, two copies of a final report of the analysis completed on each building for which financial assistance was provided shall be submitted, either both to the State energy agency, or one to the State energy agency, and one to DOE as agreed upon between the State and the DOE Support Office no later than 90 days following completion of the analysis. These reports shall contain:

(i) The report submitted to the institution by the technical assistance analyst, and

(ii) The institution's plan to implement energy conservation maintenance and operating procedures;

(2) For energy conservation measure projects:

(i) Semi-annual progress reports. Two copies shall be submitted, either both to the State energy agency or one to the State energy agency and one to DOE, as agreed upon between the State and the DOE Support Office, no later than the end of July (for the period January 1 through June 30), and January (for the period July 1 through December 31) and shall detail and discuss milestones accomplished, those not accomplished, status of in-progress activities, and remedial actions if needed to achieve project objectives. Reports of coordinating agency grantees shall include financial assistance which an institution declines or does not use as a result of a change in scope. A final report may be submitted in lieu of the last semi-annual report if it satisfies

the semi-annual progress report and final report designated time frames;

(ii) A final report. Two copies shall be submitted, either both to the State energy agency or one to the State energy agency and one to DOE, as agreed upon between the State and the DOE Support Office, within 90 days of the completion of the project and shall list and describe the energy conservation measures acquired and installed, contain a final actual cost and a final estimated simple payback period for each measure and the project as a whole, or a final savings-to-investment ratio for each measure and the project as a whole (depending on the State requirement), and include a statement that the completed energy conservation measures conform to the approved grant application;

(iii) Annual energy use reports from a representative sample to be selected by the State which will reflect the grantee's actual post-retrofit energy use experiences for 3 years after project completion. Two copies of these reports shall be submitted, either both to the State energy agency or one to the State energy agency and one to DOE, as agreed upon between the State and the DOE Support Office within 60 days after the end of each 12-month period covered in the reports and shall identify each building and provide data on energy use for that building for the relevant 12-month period. To the extent feasible, energy consumption data in each annual report should be the monthly usage data by fuel or energy type, and the reports should include brief descriptions of any changes in building usage, equipment, or structure occurring during the reporting period.

(3) Each copy of any technical assistance or energy conservation measure report shall be accompanied by a financial status report completed in accordance with the documents listed in §455.3;

(4) In cases where both copies of the grantee technical assistance, energy conservation measure, and financial status reports are submitted to the State, as agreed upon between the State and the DOE Support Office, the State shall in turn submit copies to DOE on a mutually agreed-upon schedule; and

(5) Such other information as DOE may from time to time request.

Subpart K—Applicant Responsibilities—Grants to States

§455.120 Grant applications for State administrative expenses.

Each State desiring to receive grants to help defray State administrative expenses shall file an application in accordance with the provisions of this section.

(a) Where a State is operating a program solely to provide grants to schools and hospitals, the maximum amount of administrative expenses the State may apply for is $50,000 or 5 percent of the Federal share of its schools and hospitals grant awards, whichever is greater.

(1) At any time after notice by DOE of the amounts allocated to each State for a grant program cycle, each State may apply to DOE for an amount for administrative expenses not exceeding $50,000.

(2) After making a submittal to DOE as required under §455.133, each State may apply for a further grant not exceeding 5 percent of the total Federal share of all grant awards for technical assistance and energy conservation measures within the State, less the $50,000 provided for in paragraph (a)(1) of this section if that was previously awarded to the State for administrative expenses in the same grant program cycle.

(b) Where a State is eligible and elects to apply to use its appropriated allocation for grants for technical assistance, program assistance, and/or marketing pursuant to §455.121, the maximum amount of administrative expenses the State may apply for is $50,000 or 5 percent of the total amount obligated or legally committed to eligible recipients in the State pursuant to the State's program under this part, whichever is greater.

(1) At any time after notice by DOE of amounts allocated to each State for a grant program cycle, each State may apply to DOE for an amount for administrative expenses not exceeding $50,000.

(2) Once the total amount obligated or legally committed to the program in

the cycle is known, a State may subsequently apply for a further grant, not exceeding 5 percent of the total amount (less the $50,000 provided for in paragraph (b)(1) of this section if that was previously awarded to the State for administrative expenses in the same fiscal year) obligated or legally committed to eligible recipients in the State during the fiscal year for technical assistance, program assistance, and marketing, and for energy conservation measures which are funded with non-Federal funds but which meet the certification and other requirements of this part for such energy conservation measures.

(3) The aggregate amount applied for to cover State administrative expenses, technical assistance, program assistance, and marketing cannot exceed the State's allocation for the fiscal year.

(c) In the event that a State cannot, or decides not to use the amount available to it for an administrative grant under this section for administrative purposes, these funds may, at the discretion of the State, be used for technical assistance and energy conservation measure grants to eligible institutions within that State in accordance with this part.

(d) Applications for financial assistance to defray State administrative expenses shall include:

(1) The name and address of the person designated by the State to be responsible for the State's functions under this part;

(2) An identification of intended use of all Federal and non-Federal funds to be used for the State administrative expenses listed in § 455.82; and

(3) Any other information required by DOE.

§ 455.121 Grant applications for State technical assistance, program assistance, and marketing programs.

(a) A State may apply for up to 100 percent of the amount allocated to it for a grant program cycle to fund administrative expenses under § 455.120 and technical assistance and program assistance programs, or for up to 50 percent of the amount allocated to it for a grant program cycle to fund marketing programs provided that:

(1) The State has established a program to fund technical assistance, program assistance, or marketing programs, and has described its program or programs in its State Plan, as specified in § 455.20(j);

(2) The State has a program or programs established consistent with this part of that fund, from non-Federal sources, energy conservation measures eligible under this part;

(3) Not more than 15 percent of the aggregate amount of Federal and non-Federal funds legally committed or obligated to eligible recipients in the State to provide program assistance, marketing and technical assistance programs, implement energy conservation measures consistent with this part, and otherwise carry out a program pursuant to this part for the fiscal year concerned are expended for program assistance, technical assistance and marketing costs for such program;

(4) The energy conservation measures funded from non-Federal sources under this section would be eligible for funding under § 455.71; and

(5) The institutions undertaking the non-Federally funded energy conservation measures do so in accordance with all applicable Federal, State, and local laws and regulations with particular attention paid to applicable Federal and State non-discrimination laws and regulations.

(b) Applications for financial assistance to defray State technical assistance, program assistance, or marketing expenses shall include:

(1) The name and address of the person designated by the State to be responsible for the State's functions under this part;

(2) An identification of intended use of all Federal and non-Federal funds for the State administrative expenses listed in § 455.82, or the technical assistance, program assistance, or marketing programs pursuant to this section;

(3) Descriptions of the activities to be implemented together with a description of the State's program to provide non-Federal sources of funding to carry out the State's program(s) for energy conservation measures consistent with this part;

(4) A certification that the 15 percent limit specified in subparagraph (a)(3) of this section will not be exceeded; and

(5) Any other information required by DOE.

§ 455.122 Applicant certifications for State grants for technical assistance, program assistance, and marketing.

Applications from States for financial assistance for technical assistance programs, program assistance, and marketing shall include certifications that the State:

(a) Has established a program or programs to fund, from non-Federal sources, energy conservation measures for eligible buildings consistent with this part;

(b) Will not expend, for technical assistance, program assistance, and marketing, more than 15 percent of the aggregate amount of Federal and non-Federal funds legally obligated or committed to eligible recipients in the State to provide technical assistance, program assistance, marketing programs, implement energy conservation measures consistent with this part, and otherwise carry out a program pursuant to this part for the fiscal year concerned; and

(c) Has provided for regular DOE-funded grants to eligible religiously affiliated institutions if the State has a State constitutional or other legal prohibition on providing State assistance to such institutions and if such institutions would be ineligible to apply for the non-Federally funded energy conservation measures or State-funded technical assistance.

§ 455.123 Grantee records and reports for State grants for administrative expenses, technical assistance, program assistance, and marketing.

(a) Each State which receives a grant for administrative expenses, or a grant for technical assistance programs, program assistance, or marketing shall keep all the records required by § 455.4 in accordance with this part and the DOE Financial Assistance Rules.

(b) Each State shall submit a semi-annual program performance report to DOE by the close of each February and August, including, but not limited to:

(1) A discussion of administrative activities pursuant to § 455.82, if a State has received a grant to fund such activities, and a discussion of milestones accomplished, those not accomplished, status of in-progress activities, problems encountered, and remedial actions, if any, planned pursuant to § 455.135(f);

(2) A discussion of technical assistance, program assistance, and/or marketing programs pursuant to § 455.121, if the State has received grants to fund such activities, including a discussion of the results of the State's program to non-Federally fund energy conservation measures consistent with this part pursuant to § 455.121, with a list of buildings receiving assistance for technical assistance programs and a list of buildings which obtained energy conservation measures using non-Federal funds, including the name and address of each building, the amount and type of funding provided to each, and for energy conservation measures, the types of measures funded in each building together with each measure's total estimated cost and estimated annual cost savings, annual energy savings, and the annual cost of the energy to be saved (determined pursuant to § 455.62(d)) consistent with the data currently provided to DOE on all ICP grants;

(3) A summary of grantee reports received by the State during the report period pursuant to §§ 455.113(b)(1) and (b)(2);

(4) For the report due to be submitted to DOE by the close of each August, an estimate of annual energy use reductions in the State, by energy source, attributable to implementation of energy conservation maintenance and operating procedures and installation of energy conservation measures under this part. Such estimates shall be based upon a sampling of institutions participating in the technical assistance phase of this program and upon the energy use reports submitted to the State pursuant to § 455.113(b)(2)(iii); and

(5) Such other information as DOE may from time to time request.

(c) Each copy of any report covering grants for State administrative, technical assistance, program assistance,

or marketing expenses shall be accompanied by a financial status report completed in accordance with the documents listed in § 455.3. In addition, States shall file quarterly financial status reports for the quarters which occur between the semi-annual report periods covered in their program performance reports. These quarterly reports are due within 30 days following the end of the applicable quarters.

Subpart L—State Responsibilities

§ 455.130 State evaluation of grant applications.

(a) If an application received by a State is reviewed and evaluated by that State and determined to be in compliance with subparts E, F, and J of this part, § 455.130(b), any additional requirements of the approved State Plan, State environmental laws, and other applicable laws and regulations, then such application will be eligible for financial assistance.

(b) Concurrent with its evaluation and ranking of grant applications pursuant to § 455.131, the State will forward applications for technical assistance or for energy conservation measures for schools to the State school facilities agency for review and certification that each school application is consistent with related State programs for educational facilities. For hospitals the certification requirement applies only if there is a State requirement for it in which case the procedure should be described in the State Plan.

§ 455.131 State ranking of grant applications.

(a) Except as provided by § 455.92 of this part, all eligible applications received by the State will be ranked by the State in accordance with its approved State Plan.

(b) For technical assistance programs, buildings shall be ranked in descending priority based upon the energy conservation potential, on a savings percentage basis, of the building as determined in the energy audit or energy use evaluation pursuant to § 455.20(k). Each State shall develop separate rankings for all buildings covered by eligible applications for:

(1) Technical assistance programs for units of local government and public care institutions and

(2) Technical assistance programs for schools and hospitals.

(c) All eligible applications for energy conservation measures received will be ranked by the State on building-by-building or a measure-by-measure basis. If a State ranks on a building-by-building basis, several buildings may be ranked as a single building if the application proposes a single energy conservation measure which is physically connected to all of the buildings. If a State ranks on a measure-by-measure basis, a measure that is physically connected to a number of buildings may be ranked as a single measure. Buildings or measures shall be ranked in accordance with the procedures established by the State Plan on the basis of the information developed during a technical assistance program (or its equivalent) for the building and the criteria for ranking applications. The criterion set forth in paragraph (1) of this subsection shall receive at least 50 percent of the weight given to the criteria used to rank applications. Each State may assign weights to the other criteria as set forth in the State Plan pursuant to § 455.20(e). The criteria for ranking applications are:

(1) Simple payback or a life-cycle cost analysis, calculated in accordance with § 455.63 and § 455.64, as applicable;

(2) The types and quantities of energy to be saved, including oil, natural gas, or electricity, in a priority as established in the approved State Plan;

(3) The types of energy sources to which conversion is proposed, including renewable energy;

(4) The quality of the technical assistance program report; and

(5) Other factors as determined by the State.

(d) A State is exempt from the ranking requirements of this section when:

(1) The total amount requested by all applications for schools and hospitals for technical assistance and energy conservation measures in a given grant program cycle for grants up to 50 percent is less than or equal to the funds available to the State for such grants and the total amount recommended for

hardship funding is less than or equal to the amounts available to the State for such grants and

(2) The total amount requested by all applications for buildings owned by units of local government and public care institutions in a given grant program cycle is less than or equal to the total amount allocated to the State for technical assistance program grants in the State;

(e) If a State elects to permit applications for credit pursuant to § 455.102, such applications for completed or partially completed energy conservation measures shall reflect both the work done and the work to be done and will be reviewed and ranked on the basis of the cost of all of the measures in the project. The credit shall not exceed the non-Federal share of the proposed additional energy conservation measures (and the Federal share shall not exceed the cost of the work remaining to be done).

(f) Within the rankings of school and hospital buildings for technical assistance and energy conservation measures including renewable resource measures to the extent that approvable applications are submitted, a State shall initially assure that:

(1) Schools receive at least 30 percent of the total funds allocated for schools and hospitals to the State in any grant program cycle and

(2) Hospitals receive at least 30 percent of the total funds allocated for schools and hospitals to the State in any grant program cycle.

(g) If there are insufficient applications from schools or hospitals to cover the respective 30 percent requirements specified in paragraph (f) of this section, then the State may recommend use of the remaining funds in those allocations for other qualified applicants.

§ 455.132 State evaluation of requests for severe hardship assistance.

(a) To the extent provided in § 455.30(d), financial assistance will be initially available for schools and hospitals experiencing severe hardship based upon an applicant's inability to provide the non-Federal share as specified in the State plan pursuant to § 455.20(g). This financial assistance will be available only to the extent necessary to enable such institutions to participate in the program.

(b) The State shall recommend funds for severe hardship applications wholly or partially from the funds reserved in accordance with § 455.30(d) and as stated in an approved State Plan.

(c) Applications for Federal funding in excess of the non-Federal share in the State plan pursuant to § 455.20(x) based on claims of severe hardship shall be given an additional evaluation by the State to assess on a quantifiable basis to the maximum extent practicable the relative need among eligible institutions. The minimum amount of additional Federal funding necessary for the applicant to participate in the program will be determined by the State in accordance with the procedures established in the State Plan. The primary consideration shall be the institution's inability to provide the non-Federal share of the project cost as specified in the State plan pursuant to § 455.20(x). Secondary criteria such as climate, fuel cost and fuel availability, borrowing capacity, median family income in the area, and other relevant factors as determined by the State may be addressed in the State Plan as specified in § 455.20(g).

(d) A State shall indicate, for those schools and hospitals with the highest rankings, determined pursuant to § 455.131(b) and (c):

(1) The amount of additional hardship funding requested by each eligible applicant for each building determined to be in a class of severe hardship and

(2) The amount of hardship funding recommended by the State based upon relative need, as determined in accordance with the State Plan, to the limit of the hardship funds available. The State must decide on a case-by-case basis whether, and to what extent, it will recommend hardship funding.

(e) If there are insufficient applications from hardship applicants to cover the 10 percent allocation provided for in § 455.30(d), then the State may recommend use of the remaining funds for other qualified applicants. The total amount recommended for hardship grants cannot exceed the 10 percent limit.

§ 455.133 Forwarding of applications from institutions and coordinating agencies for technical assistance and energy conservation measure grants.

(a) Except as provided by § 455.92 of this part, each State shall forward all applications recommended for funding within its allocation to DOE once each program cycle along with a listing of buildings or measures covered by eligible applications for schools, hospitals, units of local government, and public care institutions ranked by the State if necessary pursuant to the provisions of § 455.131. If ranking has been employed, the list shall include the standings of buildings or measures.

(1) Measure-by-measure rankings will be recombined for the respective buildings with more than one recommended measure and

(2) Buildings will be consolidated under one grantee application.

(b) The State shall indicate the amount of financial assistance requested by the applicant for each eligible building and, for those buildings recommended for funding within the limits of the State's allocation, the amount recommended for funding. If the amount recommended is less than the amount requested by the applicant, the list shall also indicate the reason for that recommendation.

(c) The State shall indicate that it has reviewed and evaluated all of the submitted applications and that those applications meet the relevant requirements of the program, and shall certify that applications submitted are eligible pursuant to § 455.130(a).

§ 455.134 Forwarding of applications for State grants for technical assistance, program assistance, and marketing.

A State eligible to apply for grants for technical assistance, program assistance, or marketing, as described in § 455.121, may submit such an application to DOE any time after the allocations have been announced as part of, or in lieu of, an application for a grant for State administrative expenses. Such applications shall provide separate narrative descriptions, budgets and appropriate milestone dates, covering each activity or program, that are sufficiently detailed to enable DOE to reasonably evaluate the application.

§ 455.135 State liaison, monitoring, and reporting.

Each State shall be responsible for:

(a) Consulting with eligible institutions and coordinating agencies representing such institutions in the development of its State Plan;

(b) Notifying eligible institutions and coordinating agencies of the content of the approved State Plan and any amendment to a State Plan;

(c) Notifying each applicant how the applicant's building or measure ranked among other applications, and whether and to what extent its application will be recommended for funding or if not to be recommended for funding, the specific reasons(s) therefor;

(d) Certifying that each institution has given its assurance that it is willing and able to participate on the basis of any changes in amounts recommended for that institution in the State ranking pursuant to § 455.131;

(e) Reporting requirements pursuant to § 455.113; and

(f) Direct program oversight and monitoring of the activities for which grants are awarded as defined in the State Plan. States shall immediately notify DOE of any noncompliance or indication thereof.

Subpart M—Grant Awards

§ 455.140 Approval of applications from institutions and coordinating agencies for technical assistance and energy conservation measures.

(a) DOE shall review and approve applications submitted by a State in accordance with § 455.133 if DOE determines that the applications meet the objectives of the Act, and comply with the applicable State Plan and the requirements of this part. DOE may disapprove all or any portion of an application to the extent funds are not available to carry out a program or measure (or portion thereof) contained in the application, or for such other reason as DOE may deem appropriate.

(b) DOE shall notify a State and the applicant of the final approval or disapproval of an application at the earliest practicable date after the DOE receipt of the application, and, in the event of disapproval, shall include a statement of the reasons therefor.

(c) An application which has been disapproved for reasons other than lack of funds may be amended to correct the cause of its disapproval and resubmitted in the same manner as the original application at any time within the same grant program cycle. Such an application will be considered to the extent funds have not already been designated for applicants by the ranking process at the time of resubmittal. However, nothing in this provision shall obligate either the State or DOE to take final action regarding a resubmitted application within the grant program cycle. An application not acted upon may be resubmitted in a subsequent grant program cycle.

(d) DOE shall not provide supplemental funds to cover cost overruns or other additional costs beyond those provided for in the original grant award for technical assistance projects and shall fund only one technical assistance project per building.

(e) DOE shall not provide supplemental funds to cover cost overruns or other additional costs beyond those provided for in the original grant award for energy conservation measures funded under a grant in a given grant program cycle. DOE shall not provide funds to cover energy conservation measures intended to replace energy conservation measures funded in an earlier grant cycle unless the State has funds remaining after all applications for new energy conservation measures have been evaluated and submitted to DOE for funding.

(f) If provided for in the State Plan, an applicant may reapply for a technical assistance program or an energy conservation measure grant which was included in a prior grant application but which was not implemented and for which no funds were expended.

(g) An applicant may apply for, and DOE may make, grant awards in another grant program cycle for additional energy conservation measures which relate to a building which previously received grants for other energy conservation measures.

(h) Funds which become available to a grantee after the installation of all approved measures, due to cost underruns in the installed measures, may be used by the grantee for additional measures if such measures are approved in writing by the State and DOE.

(i) DOE may fund costs incurred by an applicant for technical assistance and energy conservation measure projects after the date of the grant application, so long as that date is no earlier than the close of the preceding grant program cycle. Such costs may be funded when, in the judgment of DOE, the applicant has complied with program requirements and the costs incurred are allowable under applicable cost principles and the approved project budget. The applicant bears the responsibility for the entire project cost unless the application is approved by DOE in accordance with this part.

(j) In addition to the prior approval requirements for project changes as specified in the DOE Financial Assistance Rules (10 CFR part 600), a grantee shall request prior written approval from DOE before:

(1) Transferring DOE or matching amounts between buildings included in an approved application when the State ranks applications on a building-by-building basis or

(2) Transferring DOE or matching amounts between energy conservation measures included in an approved application when the State ranks on a measure-by-measure basis.

§455.141 Grant awards for units of local government, public care institutions, and coordinating agencies.

(a) DOE may make grants to units of local government, public care institutions, and coordinating agencies representing them for up to 50 percent of the costs of performing technical assistance programs for buildings covered by an application approved in accordance with §455.140 except that in the case of units of local government and public care institutions a majority of whose operating and capital funds are provided by the Government of the U.S. Virgin Islands, Guam, American

Samoa, or the Commonwealth of the Northern Mariana Islands, a grant may be made for up to 100 percent of such costs.

(b) Total grant awards within any State to units of local government and public care institutions are limited to funds allocated to each State in accordance with § 455.30.

(c) Units of local government and public care institutions are not eligible for financial assistance for severe hardship.

§ 455.142 Grant awards for schools, hospitals, and coordinating agencies.

(a) DOE may make grants to schools, hospitals, and coordinating agencies for up to 50 percent of the costs of performing technical assistance programs for buildings covered by an application approved in accordance with § 455.140; except that in the case of schools and hospitals a majority of whose operating and capital funds are provided by the Government of the U.S. Virgin Islands, Guam, American Samoa, or the Commonwealth of the Northern Mariana Islands a grant may be made for up to 100 percent of such costs. Grant awards for technical assistance programs in any State within any grant program cycle shall be limited to a portion of the total allocation as specified in § 455.30(b)(1).

(b) DOE may make grants to schools, hospitals and coordinating agencies for up to 50 percent of the costs of acquiring and installing energy conservation measures, including renewable resource measures, for buildings covered by an application approved in accordance with § 455.140, except that in the case of schools and hospitals a majority of whose operating and capital funds are provided by the Government of the U.S. Virgin Islands, Guam, American Samoa, or the Commonwealth of the Northern Mariana Islands, a grant may be made for up to 100 percent of such costs.

(c) DOE may award up to 10 percent of the total amount allocated to a State for schools and hospitals in cases of severe hardship, ascertained by the State in accordance with the State Plan, for buildings recommended and in amounts determined by the State pursuant to § 455.132(d)(2).

§ 455.143 Grant awards for State administrative expenses.

(a) For the purpose of defraying State expenses in the administration of technical assistance programs in accordance with subpart E and energy conservation measures in accordance with subpart F or energy conservation measures non-Federally funded pursuant to § 455.121, DOE may make grant awards to a State:

(1) Immediately following public notice of the amounts allocated to a State for the grant program cycle, and upon approval of the application for administrative costs, in an amount not exceeding $50,000;

(2) Concurrent with grant awards for approved applications for technical assistance or energy conservation measures for institutions in that State and upon approval of an application for administrative costs, in an amount not exceeding the difference between the amount granted pursuant to paragraph (a)(1) of this section and 5 percent of the Federal share of the total amount of grants awarded within the State for technical assistance programs and energy conservation measures in the applicable grant program cycle; or

(3) Upon receipt by DOE of documentation from the State demonstrating that sufficient non-Federal funding has been obligated or legally committed to schools and hospitals for energy conservation measures pursuant to § 455.121(a) and § 455.123(b)(2), and upon approval of an application for administrative costs, in an amount not exceeding the difference between the amount granted pursuant to paragraph (a)(1) of this section and 5 percent of the aggregate Federal and non-Federal funds obligated or legally committed to eligible recipients in the State to provide technical assistance, program assistance, and marketing programs and implement energy conservation measures consistent with this part, for the fiscal year concerned.

(b) Grants for such purposes may be made for up to 100 percent of the projected administrative expenses, not to exceed the State's allocation or the

$50,000 or 5 percent limit, as approved by DOE.

(c) The total of all grants for State administrative costs, technical assistance programs, and energy conservation measures (or for State administrative costs, technical assistance, program assistance, and marketing, if the State elects and is eligible to apply for such grants) in that State shall not exceed the total amount allocated for that State for any grant program cycle.

(d) In the event that a State cannot or decides not to use the amount available to it for an administrative grant under this section for administrative purposes, these funds may, at the discretion of the State, be used for technical assistance and energy conservation grants to eligible institutions within that State in accordance with this part.

§455.144 Grant awards for State programs to provide technical assistance, program assistance, and marketing.

(a) For the purpose of defraying State expenses in the administration of special programs to provide technical assistance and program assistance pursuant to §455.121, DOE may make a grant award to a State for up to 100 percent of the funds allocated to the State for the grant program cycle, provided that the State meets the requirements described in §455.121(b). In addition:

(1) Funds for individual technical assistance programs provided by the State pursuant to this section shall not exceed 50 percent of the cost of the technical assistance program;

(2) Grants for program assistance may be made for up to 100 percent of a State's projected program assistance expenses; and

(3) Grants for State technical assistance, and program assistance programs may be awarded by DOE upon approval of an application from the State.

(b) For the purpose of defraying State expenses in the administration of a marketing program pursuant to §455.121, DOE may make a grant award to a State for up to 50 percent of the funds allocated to the State for the grant program cycle, provided that the State meets the requirements described in §455.121(b). In addition:

(1) Grants for marketing may be made for up to 100 percent of a State's projected marketing expenses; and

(2) Such grants may be awarded by DOE upon approval of an application from the State.

(c) If a State provides a certification under section 455.121(b) and is unable to document that the required non-Federal funding levels for energy conservation measures were achieved substantially for the previous fiscal year for which a similar certification was submitted, DOE may deny the application, accept it after the percentage of allocated funds is reduced in light of past performance, or take other appropriate action.

(d) In the event that a State, after receiving a grant under this section, cannot or decides not to use all or part of the amount available to it for technical assistance, program assistance, and marketing, these funds may, at the discretion of the State and after appropriate application to and approval of DOE, be used for technical assistance and energy conservation grants to eligible institutions within that State in accordance with this part.

Subpart N—Administrative Review

§455.150 Right to administrative review.

(a) A State shall have a right to file a notice requesting administrative review of a decision under §455.143 by a Support Office Director to disapprove an application for a grant award for State administrative expenses subject to special conditions or a decision under §455.21 of this part by a Support Office Director to disapprove a State Plan or an amendment to a State Plan.

(b) A State shall have a right to file a notice requesting administrative review of a decision under §455.144 by a Support Office Director to disapprove an application for a grant award for State technical assistance, program assistance, or marketing programs.

(c) A school, hospital, coordinating agency, or State acting as an institution's duly authorized agent shall have a right to file a notice requesting administrative review of a decision under

§ 455.140 by a Support Office Director to disapprove an application for a grant award to perform technical assistance programs or to acquire and install an energy conservation measure if the disapproval is based on a determination that:

(1) The applicant is ineligible, under § 455.61 or § 455.71 or for any other reason; or

(2) An energy use evaluation submitted in lieu of an energy audit is unacceptable under the State Plan; or

(3) A technical assistance program equivalent performed without the use of Federal funds does not comply with the requirements of § 455.62 for purposes of satisfying the eligibility requirements of § 455.71(a)(3).

§ 455.151 Notice requesting administrative review.

(a) Any applicant shall have 20 days from the date of receipt of a decision subject to administrative review under § 455.150 to disapprove its application for a grant award to file a notice requesting administrative review. If an applicant does not timely file such a notice, the decision to disapprove shall become final for DOE.

(b) A notice requesting administrative review shall be filed with the Support Office Director and shall be accompanied by a written statement containing supporting arguments.

(c) If the applicant is a State appealing pursuant to paragraph (a) of § 455.150, the State shall have the right to a public hearing. To exercise that right, the State must request such a hearing in the notice filed under paragraph (b) of this section. A public hearing under this section shall be informal and legislative in nature.

(d) A notice or any other document shall be deemed filed under this subpart upon receipt.

§ 455.152 Transmittal of record on review.

On or before 15 days from receipt of a notice requesting administrative review which is timely filed, the Support Office Director shall forward to the Deputy Assistant Secretary the notice requesting administrative review, the decision to disapprove as to which administrative review is sought, a draft recommended final decision for concurrence, and any other relevant material.

§ 455.153 Review by the Deputy Assistant Secretary.

(a) If a State requests a public hearing pursuant to paragraph (a) of § 455.150, the Deputy Assistant Secretary, within 15 days, shall give actual notice to the State and FEDERAL REGISTER notice of the date, place, time, and procedures which shall apply to the public hearing. Any public hearing under this section shall be informal and legislative in nature.

(b) The Deputy Assistant Secretary shall concur in, concur in as modified, or issue a substitute for the recommended decision of the Support Office Director:

(1) With respect to a notice filed pursuant to paragraph (a) of § 455.150, on or before 60 days from receipt of documents under § 455.152 or the conclusion of a public hearing, whichever is later; or

(2) With respect to a notice filed pursuant to paragraph (b) of § 455.150, on or before 30 days from receipt of documents under § 455.152.

§ 455.154 Discretionary review by the Assistant Secretary.

On or before 15 days from the date of the determination under § 455.153(b), the applicant for a grant award may file an application, with a supporting statement of reasons, for discretionary review by the Assistant Secretary. If administrative review is sought pursuant to paragraph (a) of § 455.150, the Assistant Secretary shall send a notice granting or denying discretionary review within 15 days and upon granting such review, shall issue a decision no later that 60 days from the date discretionary review is granted. If administrative review is sought pursuant to paragraph (b) of § 455.150, the Assistant Secretary shall send a notice granting or denying discretionary review within 15 days and upon granting such review shall issue a decision no later than 30 days from the date discretionary review is granted. The Assistant Secretary may not issue a notice or decision under this paragraph without the concurrence of the DOE Office of General Counsel.

§455.155 Finality of decision.

A decision under §455.153 shall be final for DOE if there is no review sought under §455.154. If there is review under §455.154, the decision thereunder shall be final for DOE, and no appeal shall lie elsewhere in DOE.

PART 456 [RESERVED]

PART 470—APPROPRIATE TECHNOLOGY SMALL GRANTS PROGRAM

Sec.
470.1 Purpose and scope.
470.2 Definitions.
470.10 Establishment of program.
470.11 Eligibility requirements.
470.12 Management.
470.13 Program solicitation.
470.14 Evaluation and selection.
470.15 Allocation of funds.
470.16 Cost sharing and funds from other sources.
470.17 General requirements.
470.18 Debriefing.
470.20 Dissemination of information.

AUTHORITY: Energy Research and Development Administration Appropriation Authorization of 1977, Pub. L. 95–39; Energy Reorganization Act of 1974, Pub. L. 93–438; Department of Energy Organization Act, Pub. L. 95–91.

SOURCE: 45 FR 8928, Feb. 8, 1980, unless otherwise noted.

EDITORIAL NOTE: The recordkeeping requirements contained in this part have been approved by the Office of Management and Budget under control number 1904–0036.

§470.1 Purpose and scope.

This part contains guidelines for the implementation of the appropriate technology small grants program required to be prescribed by section 112 of the Act.

§470.2 Definitions.

As used in this part—

Act means the Energy Research and Development Administration Appropriation Authorization of 1977, Pub. L. 95–39, 91 Stat. 180, 42 U.S.C. 5907a.

Affiliate means a concern which, either directly or indirectly, controls or has the power to control another concern, is controlled by or is within the power to control of another concern or, together with another concern, is controlled by or is within the power to control of a third party, taking into consideration all appropriate factors, including common ownership, common management and contractual relationships.

Concern means any business entity organized for profit (even if its ownership is in the hands of a nonprofit entity) with its principal place of business located in the United States. ''Concern'' includes, but is not limited to, an individual, partnership, corporation, joint venture, association or cooperative. For the purpose of making affiliation findings, any business entity, whether organized for profit or not, and any foreign business entity (i.e., any entity located outside the United States), shall be included.

DOE means the Department of Energy.

DOE-AR means the Department of Energy Assistance Regulations (10 CFR part 600).

DOE-PR means the Department of Energy Procurement Regulations (41 CFR part 9).

Indian tribe means any tribe band, nation, or other organized group or community of Indians (including any Alaska native village or regional or village corporation as defined in or established pursuant to the Alaska Native Claims Settlement Act, Pub. L. 92–203, 85 Stat. 688, which (1) is recognized as eligible for the special programs and services provided by the United States to Indians because of their status as Indians; or (2) is located on, or in proximity to, a Federal or State reservation or rancheria, acting through its tribal organization.

Local agency means an agency or instrumentality of a local government.

Local government means a local unit of government including specifically a county, municipality, city, town, township, local public authority, special district, intrastate district, council of governments, sponsor group representative organization, and other regional or intrastate government entity.

Local nonprofit organization or institution means any corporation trust, foundation, trade association, or other institution (1) which is entitled to exemption under section 501(c)(3) of the

Internal Revenue Code or (2) which is not organized for profit and no part of the net earnings of which insure to the benefit of any private shareholder or individual.

Program means the appropriate technology small grants program.

Small business means a concern, including its affiliates, which is organized for profit, is independently owned and operated, is not dominant in the field of operation in which it is submitting a proposal to DOE, and has 100 employees or less.

Standard Federal regions means the 10 standard Federal regions established by Office of Management and Budget Circular A–105, entitled ''Standard Federal Regions.''

State means any of the several States of the United States, the District of Columbia, the Commonwealth of Puerto Rico, and any territory or possession of the United States.

State agency means an agency or instrumentality of a State government.

State government means the government of a State, or an interstate organization.

Support means financial support or award under the program by grants, cooperative agreements or contracts.

Tribal organization means the recognized governing body of an Indian tribe, or any legally established organization of Native Americans which is controlled, sanctioned, or chartered by such governing body.

§ 470.10 Establishment of program.

There is established, under direction of the Assistant Secretary for Conservation and Solar Energy of DOE, an appropriate technology small grants program for the purpose of encouraging development and demonstration of, and the dissemination of information with respect to, energy-related systems and supporting technologies appropriate to—

(a) The needs of local communities and the enhancement of community self-reliance through the use of available resources;

(b) The use of renewable resources and the conservation of non-renewable resources;

(c) The use of existing technologies applied to novel situations and uses;

(d) Applications which are energy conserving, environmentally sound, small scale and low cost; and

(e) Applications which demonstrate simplicity of installation, operation and maintenance.

§ 470.11 Eligibility requirements.

(a) Support under this part may be made to individuals, local non-profit organizations and institutions. State and local agencies, Indian tribes and small businesses.

(b) The aggregate amount of support made available to any participant in the program, including affiliates, shall not exceed $50,000 during any 2-year period. This limitation applies only to support for projects and not to funds received by participants from DOE for other purposes, such as performance of services.

(c) Projects which shall be considered for support are those which carry out the purposes of the program as expressed in § 470.10 and which are within the following categories—

(1) Idea development, i.e., the development of an idea or concept or an investigative finding in areas ranging from development of new concepts of energy sources to the utilization of old procedures or systems for a new application;

(2) Device development, i.e., the systematic use and practical application of investigative findings and theories of a scientific or technical nature toward the production of, or improvements in, useful products to meet specific performance requirements but exclusive of manufacturing and production engineering. The dominant characteristic is that the effort be pointed toward specific energy problem areas to develop and evaluate the feasibility and practicability of proposed solutions and determine their parameters. Device development includes studies, investigations, initial hardware development and ultimately development of hardware, systems, or other means for experimental or operational test; or

(3) Demonstration, i.e., the testing of a system or technique under operation conditions to show that commercial application is technically, economically and environmentally feasible.

(d) Support for each category in paragraph (c) of this section shall not, for a single participant in the program, including affiliates, exceed the following limits for any project—

(1) For idea development, $10,000;

(2) For device development, $50,000; and

(3) For demonstration, $50,000.

(4) A participant may receive under a subsequent program solicitation—

(i) Additional support for a funded project or;

(ii) Initial support for a new project, subject to the support limits set forth in paragraphs (b) and (d) of this section.

§ 470.12 Management.

(a) The program shall be managed by a National Program Director within the Office of the Assistant Secretary for Conservation and Solar Energy of DOE.

(b) The program shall be implemented regionally, based on the 10 standard Federal regions or combinations thereof, to insure substantial consideration of the needs, resources, and special circumstances of local communities. Regions may be combined provided the requirements of Office of Management and Budget Circular A–106 entitled ''Standard Federal Regulations'' are met. Regional Program Managers shall design and manage the regional programs as directed by the National Program Director and shall consult, as appropriate, with State and local officials, the appropriate technology community and other interested parties.

§ 470.13 Program solicitation.

(a) The Regional Program Managers shall be responsible for the preparation of program solicitations which solicit proposals for support under the program pursuant to simplified application procedures. Projects may be supported under the program only if they have successfully completed under a program solicitation.

(b) Each program solicitation shall include—

(1) A description of the program;

(2) The eligibility requirements;

(3) A time schedule for submission of, and action on, proposals;

(4) A simple application form for submitting a proposal for support under the program, together with instructions for completing the application form;

(5) Evaluation criteria, along with a narrative description of their relative importance;

(6) An explanation of the evaluation and selection procedures, including a notice to proposers that if the proposer expressly indicates that only Government evaluation is authorized, DOE may be unable to give full consideration to the proposal.

(7) Other applicable information, terms and conditions, including the desired budget format;

(8) Place for, and manner of, submission;

(9) A unique number for identification purposes;

(10) A statement notifying potential proposers that an announcement does not commit DOE to pay any proposal perparation costs and that DOE reserves the right to select for support any, all, or none of the proposals received in response to a solicitation;

(11) A late proposal provision;

(12) A statement notifying proposers how to identify information in the proposal which the proposer does not want disclosed for purposes other than the evaluation of the proposal.

(13) A statement notifying proposers that all information contained in the proposal will be handled in accordance with the policies and procedures set forth in DOE-AR and DOE-PR, as applicable, and disclosed, if appropriate, in accordance with 10 CFR part 1004 entitled ''Freedom of Information.''

(14) A statement notifying proposers of their right to request a debriefing pursuant to the procedures set forth in § 470.18; and

(15) A statement notifying proposers of their right to request a waiver of DOE's title to inventions made under the program.

(c) Each program solicitation shall be synopsized in the *Commerce Business Daily* prior to or concurrent with release. The program solicitation also shall be announced to appropriate newspapers, trade and technical publications, and State and local governments, and shall be circulated directly

to interested individuals, entities, and associations thereof, to the maximum extent feasible.

§ 470.14 Evaluation and selection.

(a) Prior to making a comprehensive evaluation of a proposal, the receiving office shall determine that it contains sufficient technical, cost, and other information to enable comprehensive evaluation and that it has been properly signed. If the proposal does not meet these requirements, a prompt reply shall be sent to the proposer, indicating the reason(s) for the proposal not being selected for support under the program solicitation. A proposer may correct any minor informality or irregularity or apparent clerical mistake prior to the entering into of grants, contracts, or cooperative agreements. A minor informality or irregularity is one which is merely a matter of form and not of substance or pertains to some immaterial or inconsequential defect or variation from the exact requirements of the program announcement.

(b)(1) The Regional Program Manager shall select a number of technical evaluation reviewers representing several disciplines to ensure adequate technical review of proposals.

(2) After receiving nominations from each State or combinations of States within the Region, the Program Manager shall select a number of State reviewers for each State or combinations of States, respectively. The nominations and selections of State reviewers shall take into consideration representation by persons from a variety of backgrounds, in order that the reviewers are able to evaluate proposals of potential merit in various fields and from various types of proposers.

(3) The Regional Program Manager or designee shall provide proposals to the technical evaluation and State reviewers and shall provide their findings and comments to the selection panel established pursuant to paragraph (3) of this section.

(4) In carrying out the responsibilities set forth in paragraphs (b) (1), (2) and (3) of this section, the Regional Program Manager (i) shall determine the number of technical evaluation and State reviewers who shall review each proposal; (ii) shall determine the sequence of the technical and State review; (iii) may designate a person to serve as both a technical and State reviewer, if appropriate to the needs of the program in the Region. A decription of the Program Manager's determinations under this paragraph shall be included in the Program Solicitation pursuant to § 470.13(b)(6).

(c) Each technical evaluation reviewer shall evaluate those proposals which he or she receives from the Regional Program Manager or designee and shall provide his or her findings to the Regional Program Manager or designee. In addition to the general criteria underlying the establishment of the program as set forth in § 470.10, the major criteria to be considered by each technical evaluation reviewer shall include—

(1) Whether the proposal is technically feasible, including a determination as to whether the proposed energy savings or energy production can be technically achieved;

(2) Whether the results being proposed are capable of being measured;

(3) Whether the proposal has any potential environmental, health and safety impacts; and

(4) From a technical standpoint, whether the proposal can be carried out within the funds being requested.

(d) Each State reviewer shall evaluate those proposals which he or she receives from the Program Manager or designee and shall provide his or her findings and comments to the Program Manager or designee. In addition to the general criteria underlying establishment of the program as set forth in § 470.10, the criteria to be considered by each State reviewer shall include—

(1) The potential impact of the proposal on the energy needs and requirements of the community or region;

(2) The energy resource involved and its importance or availability to the community or region;

(3) The expected energy savings or production that will result from the proposal and the significance of those savings or production to the energy requirements of the community or region;

(4) The institutional barriers that may substantially affect the proposal

and the potential of the proposal to deal with those barriers;

(5) The likelihood of commercialization or utilization of the technology, process, or items within the proposal and extent of such commercialization/utilization;

(6) The innovative nature of the proposal;

(7) Any potential environmental, health and safety impacts of the proposal upon the community or region;

(8) The extent to which work beyond the funded project period might be required;

(9) The extent to which local resources, material, and manpower will be utilized; and

(10) The adequacy of the business aspects of the proposal, including the reasonableness of the proposer's budget for carrying out the proposal.

(e) A selection panel composed of DOE personnel appointed by the Regional Program Manager shall, taking into account the findings and comments of the technical evaluation and State reviewers, evaluate and rank the proposals in accordance with the criteria stated in the program solicitation.

(f) For each Region, a DOE selection official shall select proposals for support from the ranking established by the selection panel, taking into account the following program policy factors in order to determine the mix of proposed projects which will best further specific program goals—

(1) Regional distribution, including geography, population, and climate;

(2) Project type distribution, including a diversity of methods, approaches, and technologies;

(3) Diversity of participants; and

(4) The best overall use of the funds available.

§ 470.15 Allocation of funds.

(a) DOE shall annually allocate fiscal year funds available for support among the 10 standard Federal Regions, according to the following formula;

(1) Two-thirds to be allocated according to population; and

(2) One-third to be allocated according to the number of proposals received, per hundred thousand of population of the Region, which meet the requirements set forth in § 470.14(a).

(b) The minimum annual level of support for projects for each State within a Region shall be 10 percent of the fiscal year funds allocated to the Region, divided by the number of States in the Region.

(c) For the purposes of this section, population shall be determined by the most current complete national series, as published by the United States Bureau of the Census in *Current Population Reports*, P–25, P–26, or related series, except where data from the decennial census conducted by the Bureau of the Census is more current.

§ 470.16 Cost sharing and funds from other sources.

Proposers are encouraged to offer to share in the costs of their proposed projects or to arrange that other entities provide cost sharing on their behalf. Regional Program Managers, with the consent of the proposer, may work with States, local governments or other entities to obtain supplemental funding.

§ 470.17 General requirements.

(a) Except where this part provides otherwise, the submission, evaluation and selection for support of proposals under the program and the entering into and administration of grants, cooperative agreements, and contracts under the program, shall be governed by the provisions of DOE-AR and DOE-PR are applicable, such other procedures applicable to grants, cooperative agreements, and contracts under the program as DOE may from time to time prescribe, and any Federal requirements applicable to grants, cooperative agreements, and contracts under the program.

(b) Each grant, cooperative agreement or contract under this part shall require that a recipient of support under the program shall submit a full written report of activities supported in whole or in part by Federal funds made available under the program and shall contain any additional report provisions and other provisions dealing with records, allowable expenses, accounting practices, publication and

publicity, copyrights, patents, discrimination, conflict of interest, insurance, safety, changes, resolution of disputes and other standard and/or relevant support agreements requirements required by, or appropriate to, the needs of the program.

§ 470.18 Debriefing.

Upon written request, unsuccessful proposers will be accorded debriefings. Such debriefings must be requested within 30 working days of notification of elimination from consideration. Debriefings will be provided at the earliest feasible time as determined by the Regional Program Manager.

§ 470.20 Dissemination of information.

DOE shall disseminate to the public, in an appropriate manner, information of the nature, usage and availability of the energy-related systems and supporting technologies developed or demonstrated under the program. In addition, DOE shall maintain and make available to recipients of support under the program current information on public and private sources of possible assistance for the further development and commercialization of their projects.

PART 473—AUTOMOTIVE PROPULSION RESEARCH AND DEVELOPMENT

REVIEW AND CERTIFICATION OF GRANTS, COOPERATIVE AGREEMENTS, CONTRACTS, AND PROJECTS

Sec.
473.1 Purpose and scope.
473.2 Definitions.
473.10 Required information from applicant.
473.11 Submission of applicant's information.
473.20 Public notice and opportunity to object.
473.21 Supplemental information and rebuttal.
473.22 Initial review by manager.
473.23 Interagency review panel.
473.24 Final action and certification by manager.
473.25 Reviewability of certification.
473.30 Standards and criteria.

AUTHORITY: Federal Energy Administration Act of 1978—Civilian Applications, Pub. L. 95–238; Department of Energy Organization Act, Pub. L. 95–91.

SOURCE: 43 FR 55230, Nov. 24, 1978, unless otherwise noted.

REVIEW AND CERTIFICATION OF GRANTS, COOPERATIVE AGREEMENTS, CONTRACTS, AND PROJECTS

§ 473.1 Purpose and scope.

These regulations implement section 304(f) of the Federal Energy Administration Act of 1978—Civilian Applications, and apply to each new contract, grant, cooperative agreement, Department of Energy project, or other agency project funded or to be funded under the authority of that Act. 15 U.S.C. 2703(f) (1970). These regulations do not apply to subcontractors, or to contracts, grants, cooperative agreements, Department of Energy projects, or other agency projects entered into, made, or formally approved and initiated prior to February 25, 1978, or with respect to any renewal or extension thereof. Insofar as grants, cooperative agreements, and contracts are concerned, these regulations provide procedures and requirements that are in addition to those generally applicable under the assistance and procurement regulations of the Federal agency funding research and development under the Act.

§ 473.2 Definitions.

For purpose of these regulations—

Act means the Federal Energy Administration Act of 1978—Civilian Applications. Pub. L. 95–238, 92 Stat. 47.

Advanced automobile propulsion system means an energy conversion system, including engine and drivetrain, which utilizes advanced technology and is suitable for use in an advanced automobile.

Agency project means research and development under the Act by employees of a Federal agency furnishing assistance at the request of the DOE.

Annual funding period means the Federal fiscal year during which a grant, cooperative agreement, or contract is funded by an appropriation under the Act.

Applicant means any private laboratory, university, nonprofit organization, industrial organization, private agency, institution, organization, corporation, partnership, individual, or

public agency other than a Federal agency.

DOE project means research and development under the Act by employees of the DOE.

Federal agency means an executive agency as defined by 5 U.S.C. 105 (1970).

Manager means the Federal program official who requests grant agreements, cooperative agreements, or contracts to be negotiated or who authorizes a DOE or agency project to begin.

Notice of availability means a notice published in the Commerce Business Daily advertising the availability of a formal solicitation document to be issued for the purpose of inviting and setting guidelines for submission of proposals for research and development grants, cooperative agreements, or contracts.

Research and development means activities constituting a project to create an advanced automobile propulsion system and does not mean activities involving technology transfer to mass production, evaluative testing, preliminary planning for a DOE or an agency project, or program administration and management.

Solicitation means a formal, written request for proposals to perform research and development under a grant, cooperative agreement, or contract, typically including evaluation criteria and a statement of the work to be done.

§ 473.10 Required information from applicant.

In accordance with applicable procedures of § 473.11 any applicant for a grant, cooperative agreement, or contract under the Act to support research and development activities of an advanced automobile propulsion system shall—

(a) State whether the activities will initiate or continue research and development of an advanced automobile propulsion system;

(b) State, insofar as the applicant has information, whether and to what extent the activities to be supported are technically the same as activities conducted previously or to be conducted during the annual funding period by any person for research and development of a substantially similar advanced automobile propulsion system;

(c) Justify research and development activities on an advanced automobile propulsion system abandoned by any person because of a lack of mass production potential by presenting information showing a significant intervening technological advance, promising conceptual innovation, or other special consideration;

(d) Provide—

(1) An assurance that the amount of funds to be expended for research and development of advanced automobile propulsion systems during the initial annual funding period will exceed the amount of funds expended, if any, during the previous year for the same purpose by at least the amount of the grant, cooperative agreement, or contract being sought; and

(2) An assurance that the level of research and development effort on advanced automobile propulsion systems in the initial annual funding period will not be decreased in future annual funding periods.

(e) Provide to the extent possible—

(1) An assurance that the time period for completing research and development of the advanced automobile propulsion is likely to be shorter as a result of a grant, cooperative agreement, or contract; and

(2) The estimated delay, if any, which is likely to occur if the application for a grant, cooperative agreement, or contract is denied.

§ 473.11 Submission of applicant's information.

(a) An applicant submitting an unsolicited proposal to conduct research and development to be funded by a grant, cooperative agreement, or contract under the Act shall include the information required under § 473.10 in the unsolicited proposal document filed under the assistance or procurement regulations of the DOE or other Federal agency which funds the proposed research and development under the Act.

(b) In responding to a solicitation for a proposal to conduct research and development funded by a grant, cooperative agreement, or contract under the

Act, the applicant shall include the information required under § 473.10 in the proposal.

(c) Information submitted under § 473.10 of these regulations shall be certified in writing as complete and accurate by the applicant, and if the applicant is not an individual, the chief executive officer of the applicant or his authorized designee shall sign the certification.

§ 473.20 Public notice and opportunity to object.

(a) In compliance with paragraph (b) of this section and unless provisions of paragraph (c) of this section apply, the manager shall cause to be published in the Commerce Business Daily a statement describing the unsolicited proposal, solicitation, DOE project, or agency project, as appropriate, inviting any interested person to submit a written objection, with supporting information at an appropriate address on or before 30 days from the date of publication, if the person believes that the research and development to be performed does not comply with standards and criteria of § 473.30.

(b) Except as paragraph (c) of this section applies, the manager shall comply with the requirements of paragraph (a) of this section—

(1) Upon receipt of an unsolicited proposal from an applicant;

(2) In any notice of availability of a solicitation;

(3) Prior to beginning a DOE project; or

(4) Prior to beginning an agency project.

(c) Without publishing a notice under paragraph (a) of this section, the manager may reject an unsolicited proposal that does not comply with these regulations or any other generally applicable requirements.

§ 473.21 Supplemental information and rebuttal.

The manager may request additional information from an applicant or any interested person who files an objection under § 473.20.

§ 473.22 Initial review by manager.

(a) Upon expiration of the time for filing information under these regulations, the manager shall—

(1) Review the proposed research and development to be performed under grant, under cooperative agreement, under contract, as a DOE project, or as an agency project and any other pertinent information received under these regulations or otherwise available; and

(2) Initially determine whether the research and development reviewed under paragraph (a)(1) of this section complies with the standards and criteria of § 473.30.

(b) A manager who makes a negative determination under paragraph (a)(2) of this section shall inform the applicant and any interested person who objected of the decision in writing with a brief statement of supporting reasons.

(c) A manager who initially determines that research and development reviewed under this section complies with the standards and criteria of § 473.30 shall cause an interagency review panel to be convened under § 473.23.

§ 473.23 Interagency review panel.

(a) The interagency review panel shall consist of—

(1) A head designated by the Federal agency that employs the manager;

(2) A representative of the DOE if the manager is not an employee of the DOE; and

(3) A representative of any other Federal agency deemed appropriate by the Federal agency that employs the manager.

(b) The interagency review panel shall—

(1) Review the research and development to be performed and consider the information presented by the applicant, in the case of a grant, cooperative agreement, or contract, and by any interested person who filed a statement of objection;

(2) Make a recommendation with a supporting statement of findings to the manager as to whether the research and development to be performed complies with the standards and criteria of § 473.30; and

(3) Operate by majority vote with the head of the panel casting the decisive vote in the event of a tie.

§ 473.24 Final action and certification by manager.

(a) Upon consideration of the recommendation of the interagency review panel and other pertinent information, the manager—

(1) Shall determine whether the research and development to be performed complies with the standards and criteria of § 473.30;

(2) Shall obtain the concurrence of the DOE if the manager is not an employee of the DOE;

(3) Shall, in the event of a negative determination under this section, advise the applicant, in the case of a grant, cooperative agreement, or contract, and any interested person who filed a statement of objection; and

(4) Shall, in the event of an affirmative determination under this section, prepare a certification—

(i) Explaining the determination;

(ii) Discussing any allegedly related or comparable industrial research and development considered and deemed to be an inadequate basis for not certifying the grant or contract;

(iii) Discussing issues regarding cost sharing and patent rights related to the standards and criteria of § 473.30 of these regulations; and

(iv) Discussing any other relevant issue.

(b) After complying with paragraph (a) of this section, the manager shall sign the certification and distribute copies to the applicant, if any, and any interested person who filed a statement of objections—

(1) Immediately in the case of a DOE or agency project; and

(2) After the agreement has been negotiated in the case of a grant, cooperative agreement, or contract.

§ 473.25 Reviewability of certification.

Any certification issued under these rules is—

(a) Subject to disclosure under 5 U.S.C. 552 (1970) and section 17 of the Federal Nonnuclear Energy Research and Development Act of 1974, as amended, 42 U.S.C. 5918 (1970);

(b) Subject neither to judicial review nor to the provisions of 5 U.S.C. 551–559 (1970), except as provided under paragraph (a) of this section; and

(c) Available to the Committee on Science and Technology of the House of Representatives and the Committee on Energy and Natural Resources of the Senate.

§ 473.30 Standards and criteria.

Research and development to be performed under a grant, under a cooperative agreement, under a contract, as a DOE project, or as an agency project under the Act may be certified under these regulations only if the research and development to be conducted—

(a) Supplements the automotive propulsion system research and development efforts of industry or any other private researcher;

(b) Is not duplicative of efforts previously abandoned by private researchers unless there has been an intervening technological advance, promising conceptual innovation, or justified by other special consideration;

(c) Would not be performed during the annual funding period but for the availability of the Federal funding being sought;

(d) Is likely to produce an advanced automobile propulsion system suitable for steps toward technology transfer to mass production in a shorter time period than would otherwise occur;

(e) Is not technologically the same as efforts by any person conducted previously or to be conducted during the annual funding period regarding a substantially similar advanced automobile propulsion system; and

(f) Is not likely to result in a decrease in the level of private resources expended on advanced automotive research and development by substituting Federal funds without justification.

PART 474—ELECTRIC AND HYBRID VEHICLE RESEARCH, DEVELOPMENT, AND DEMONSTRATION PROGRAM; PETROLEUM-EQUIVALENT FUEL ECONOMY CALCULATION

Sec.
474.1 Purpose and scope.
474.2 Definitions.
474.3 Petroleum-equivalent fuel economy calculation.
474.4 Test procedures.
474.5 Review and update.
APPENDIX TO PART 474—SAMPLE PETROLEUM-EQUIVALENT FUEL ECONOMY CALCULATIONS

AUTHORITY: 49 U.S.C. 32901 *et seq.*

SOURCE: 65 FR 36991, June 12, 2000, unless otherwise noted.

§ 474.1 Purpose and Scope.

This part contains procedures for calculating a value for the petroleum-equivalent fuel economy of electric vehicles, as required by 49 U.S.C. 32904(a)(2). The petroleum-equivalent fuel economy value is intended to be used by the Environmental Protection Agency in calculating corporate average fuel economy values pursuant to regulations at 40 CFR Part 600—Fuel Economy of Motor Vehicles.

§ 474.2 Definitions.

For the purposes of this part, the term:

Combined energy consumption value means the weighted average of the Urban Dynamometer Driving Schedule and the Highway Fuel Economy Driving Schedule energy consumption values (weighted 55/45 percent, respectively), as determined by the Environmental Protection Agency in accordance with 40 CFR parts 86 and 600.

Electric vehicle means a vehicle that is powered by an electric motor drawing current from rechargeable storage batteries or other portable electrical energy storage devices, provided that:

(1) Recharge energy must be drawn from a source off the vehicle, such as residential electric service; and

(2) The vehicle must comply with all provisions of the Zero Emission Vehicle definition found in 40 CFR 88.104–94(g).

Highway Fuel Economy Driving Schedule energy consumption value means the average number of watt-hours of electrical energy required for an electric vehicle to travel one mile of the Highway Fuel Economy Driving Schedule, as determined by the Environmental Protection Agency.

Petroleum equivalency factor means the value specified in § 474.3(b) of this part, which incorporates the parameters listed in 49 U.S.C. 32904(a)(2)(B) and is used to calculate petroleum-equivalent fuel economy.

Petroleum-equivalent fuel economy means the value, expressed in miles per gallon, that is calculated for an electric vehicle in accordance with § 474.3(a) of this part, and reported to the Administrator of the Environmental Protection Agency for use in determining the vehicle manufacturer's corporate average fuel economy.

Petroleum-powered accessory means a vehicle accessory (e.g., a cabin heater, defroster, and/or air conditioner) that:

(1) Uses gasoline or diesel fuel as its primary energy source; and

(2) Meets the requirements for fuel, operation, and emissions in 40 CFR part 88.104–94(g).

Urban Dynamometer Driving Schedule energy consumption value means the average number of Watt-hours of electrical energy required for an electric vehicle to travel one mile of the Urban Dynamometer Driving Schedule, as determined by the Environmental Protection Agency.

§ 474.3 Petroleum-equivalent fuel economy calculation.

(a) The petroleum-equivalent fuel economy for an electric vehicle is calculated as follows:

(1) Determine the electric vehicle's Urban Dynamometer Driving Schedule energy consumption value and the Highway Fuel Economy Driving Schedule energy consumption value in units of Watt-hours per mile;

(2) Determine the combined energy consumption value by averaging the Urban Dynamometer Driving Schedule energy consumption value and the Highway Fuel Economy Driving Schedule energy consumption value using a weighting of 55 percent urban/45 percent highway; and

(3) Calculate the petroleum-equivalent fuel economy by dividing the appropriate petroleum-equivalency factor (depending on whether any petroleum-powered accessories are installed; see paragraph (b) of this section) by the combined energy consumption value, and round to the nearest 0.01 miles per gallon.

(b) The petroleum-equivalency factors for electric vehicles are as follows:

(1) If the electric vehicle does not have any petroleum-powered accessories installed, the value of the petroleum equivalency factor is 82,049 Watt-hours per gallon.

(2) If the electric vehicle has any petroleum-powered accessories installed, the value of the petroleum-equivalency factor is 73,844 Watt-hours per gallon.

§ 474.4 Test procedures.

(a) The electric vehicle energy consumption values used in the calculation of petroleum-equivalent fuel economy under § 474.3 of this part will be determined by the Environmental Protection Agency using the Highway Fuel Economy Driving Schedule and Urban Dynamometer Driving Schedule test cycles at 40 CFR parts 86 and 600.

(b) The ''Special Test Procedures'' provisions of 40 CFR 86.090–27 may be used to accommodate any special test procedures required for testing the energy consumption of electric vehicles.

§ 474.5 Review and Update

The Department will review part 474 five years after the date of publication as a final rule to determine whether any updates and/or revisions are necessary. DOE will publish a notice in the FEDERAL REGISTER soliciting stakeholder input in this review. The Department will publish the findings of the review and any resulting adjustments to part 474 in the FEDERAL REGISTER.

APPENDIX TO PART 474—SAMPLE PETROLEUM-EQUIVALENT FUEL ECONOMY CALCULATIONS

Example 1: An electric vehicle is tested in accordance with Environmental Protection Agency procedures and is found to have an Urban Dynamometer Driving Schedule energy consumption value of 265 Watt-hours per mile and a Highway Fuel Economy Driving Schedule energy consumption value of 220 Watt-hours per mile. The vehicle is not equipped with any petroleum-powered accessories. The combined electrical energy consumption value is determined by averaging the Urban Dynamometer Driving Schedule energy consumption value and the Highway Fuel Economy Driving Schedule energy consumption value using weighting factors of 55 percent urban, and 45 percent highway:

combined electrical energy consumption value = (0.55 * urban) + (0.45 * highway) = (0.55 * 265) + (0.45 * 220) = 244.75 Wh/mile

Since the vehicle does not have any petroleum-powered accessories installed, the value of the petroleum equivalency factor is 82,049 Watt-hours per gallon, and the petroleum-equivalent fuel economy is:

(82,049 Wh/gal) (244.75 Wh/mile) = 335.24 mpg

Example 2: The vehicle from Example 1 is equipped with an optional diesel-fired cabin heater/defroster. For the purposes of this example, it is assumed that the electrical efficiency of the vehicle is unaffected.

Since the vehicle has a petroleum-powered accessory installed, the value of the petroleum equivalency factor is 73,844 Watt-hours per gallon, and the petroleum-equivalent fuel economy is:

(73,844 Wh/gal) (244.75 Wh/mile) = 301.71 mpg

PART 490—ALTERNATIVE FUEL TRANSPORTATION PROGRAM

Subpart A—General Provisions

Sec.
490.1 Purpose and scope.
490.2 Definitions.
490.3 Excluded vehicles.
490.4 General information inquiries.
490.5 Requests for an interpretive ruling.
490.6 Petitions for generally applicable rulemaking.
490.7 Relationship to other law.
490.8 Replacement fuel production goal.
APPENDIX A TO SUBPART A OF PART 490—METROPOLITAN STATISTICAL AREAS/CONSOLIDATED METROPOLITAN STATISTICAL AREAS WITH 1980 POPULATIONS OF 250,000 OR MORE

Subpart B [Reserved]

Subpart C—Mandatory State Fleet Program

490.200 Purpose and scope.
490.201 Alternative fueled vehicle acquisition mandate schedule.
490.202 Acquisitions satisfying the mandate.
490.203 Light Duty Alternative Fueled Vehicle plan.
490.204 Process for granting exemptions.
490.205 Reporting requirements.

490.206 Violations.

Subpart D—Alternative Fuel Provider Vehicle Acquisition Mandate

490.300 Purpose and scope.
490.301 Definitions.
490.302 Vehicle acquisition mandate schedule.
490.303 Who must comply.
490.304 Which new light duty motor vehicles are covered.
490.305 Acquisitions satisfying the mandate.
490.306 Vehicle operation requirements.
490.307 Option for electric utilities.
490.308 Process for granting exemptions.
490.309 Annual reporting requirements.
490.310 Violations.

Subpart E [Reserved]

Subpart F—Alternative Fueled Vehicle Credit Program

490.500 Purpose and scope.
490.501 Applicability.
490.502 Creditable actions.
490.503 Credit allocation.
490.504 Use of alternative fueled vehicle credits.
490.505 Credit accounts.
490.506 Alternative fueled vehicle credit transfers.
490.507 Credit activity reporting requirements.

Subpart G—Investigations and Enforcement

490.600 Purpose and scope.
490.601 Powers of the Secretary.
490.602 Special orders.
490.603 Prohibited acts.
490.604 Penalties and fines.
490.605 Statement of enforcement policy.
490.606 Proposed assessments and orders.
490.607 Appeals.

Subpart H—Biodiesel Fuel Use Credit

490.701 Purpose and scope.
490.702 Definitions.
490.703 Biodiesel fuel use credit allocation.
490.704 Procedures and documentation.
490.705 Use of credits.
490.706 Procedure for modifying the biodiesel component percentage.
490.707 Increasing the qualifying volume of the biodiesel component.
490.708 Violations.

Subpart I—Alternative Compliance

490.801 Purpose and scope.
490.802 Eligibility for alternative compliance waiver.
490.803 Waiver requirements.
490.804 Eligible reductions in petroleum consumption.
490.805 Application for waiver.
490.806 Action on an application for waiver.
490.807 Reporting requirement.
490.808 Use of credits to offset petroleum reduction shortfall.
490.809 Violations.
490.810 Record retention.

AUTHORITY: 42 U.S.C. 7191 *et seq.;* 42 U.S.C. 13201, 13211, 13220, 13251 *et seq.*

SOURCE: 61 FR 10653, Mar. 14, 1996, unless otherwise noted.

Subpart A—General Provisions

§ 490.1 Purpose and Scope.

(a) The provisions of this part implement the alternative fuel transportation program under titles III, IV, V, and VI of the Energy Policy Act of 1992. (Pub. L. 102–486)

(b) The provisions of this subpart cover:

(1) The definitions applicable throughout this part;

(2) Procedures to obtain an interpretive ruling and to petition for a generally applicable rule to amend this part; and

(3) The goal of the replacement fuel supply and demand program established under section 502(a) of the Act (42 U.S.C. 13252(a)).

[61 FR 10653, Mar. 14, 1996, as amended at 72 FR 12060, Mar. 15, 2007]

§ 490.2 Definitions.

The following definitions apply to this part—

Acquire means to take into possession or control.

Act means the Energy Policy Act of 1992 (Pub. L. 102–486) and any amendments thereof.

After-Market Converted Vehicle means an Original Equipment Manufacturer vehicle that is reconfigured by a conversion company, which is not under contract to the Original Equipment Manufacturer, to operate on an alternative fuel and whose conversion kit components are under warranty of the conversion company.

Alternative Fuel means methanol, denatured ethanol, and other alcohols; mixtures containing 85 percent or more by volume of methanol, denatured ethanol, and other alcohols with gasoline

or other fuels; natural gas; liquefied petroleum gas; hydrogen; coal-derived liquid fuels; fuels (other than alcohol) derived from biological materials (including neat biodiesel); three P-series fuels (specifically known as Pure Regular, Pure Premium and Pure Cold Weather) as described by United States Patent number 5,697,987, dated December 16, 1997, and containing at least 60 percent non-petroleum energy content derived from methyltetrahydrofuran, which must be manufactured solely from biological materials, and ethanol, which must be manufactured solely from biological materials; and electricity (including electricity from solar energy).

Alternative Fueled Vehicle means a dedicated vehicle or a dual fueled vehicle (including a flexible fuel vehicle as defined by this section).

Assistant Secretary means the Assistant Secretary for Energy Efficiency and Renewable Energy or any other DOE official to whom the Assistant Secretary's duties under this part may be redelegated by the Secretary.

Automobile means a 4-wheeled vehicle propelled by conventional fuel, or by alternative fuel, manufactured primarily for use on public streets, roads, and highways (except a vehicle operated only on a rail line), and rated at

(1) Not more than 6,000 pounds gross vehicle weight; or

(2) More than 6,000, but less than 10,000 pounds gross vehicle weight, if the Secretary of Transportation has decided, by rule, that the vehicle meets the criteria in section 501(1) of the Motor Vehicle Information and Cost Savings Act, as amended, 49 U.S.C. 32901(a)(3).

Capable of Being Centrally Fueled means a vehicle can be refueled at least 75 percent of its time at the location that is owned, operated, or controlled by the fleet or covered person, or is under contract with the fleet or covered person for refueling purposes.

Centrally Fueled means that a vehicle is fueled at least 75 percent of the time at a location that is owned, operated, or controlled by the fleet or covered person, or is under contract with the fleet or covered person for refueling purposes.

Control—

(1) When it is used to determine whether one person controls another or whether two persons are under common control, means any one or a combination of the following:

(i) A third person or firm has equity ownership of 51 percent or more in each of two firms; or

(ii) Two or more firms have common corporate officers, in whole or in substantial part, who are responsible for the day-to-day operation of the companies; or

(iii) One person or firm leases, operates, or supervises 51 percent or more of the equipment and/or facilities of another person or firm; owns 51 percent or more of the equipment and/or facilities of another person or firm; or has equity ownership of 51 percent or more of another person or firm.

(2) When it is used to refer to the management of vehicles, means a person has the authority to decide who can operate a particular vehicle, and the purposes for which the vehicle can be operated.

Covered Person means a person that owns, operates, leases, or otherwise controls—

(1) A fleet, as defined by this section, that contains at least 20 light duty motor vehicles that are centrally fueled or capable of being centrally fueled, and are used primarily within a metropolitan statistical area or a consolidated metropolitan statistical area, as established by the Bureau of the Census, with a 1980 population of 250,000 or more (as set forth in appendix A to this subpart) or in a FEDERAL REGISTER notice; and

(2) At least 50 light duty motor vehicles within the United States.

Dealer Demonstration Vehicle means any vehicle that is operated by a motor vehicle dealer solely for the purpose of promoting motor vehicle sales, either on the sales lot or through other marketing or sales promotions, or for permitting potential purchasers to drive the vehicle for pre-purchase or prelease evaluation.

Dedicated Vehicle means—

(1) An automobile that operates solely on alternative fuel; or

(2) A motor vehicle, other than an automobile, that operates solely on alternative fuel.

DOE means the Department of Energy.

Dual Fueled Vehicle means—

(1) An automobile that meets the criteria for a dual fueled automobile as that term is defined in section 513(h)(1)(C) of the Motor Vehicle Information and Cost Savings Act, 49 U.S.C. 32901(a)(8); or

(2) A motor vehicle, other than an automobile, that is capable of operating on alternative fuel and on gasoline or diesel fuel; or

(3) A flexible fuel vehicle.

Electric-hybrid Vehicle means a vehicle primarily powered by an electric motor that draws current from rechargeable storage batteries, fuel cells or other sources of electric current and also relies on a non-electric source of power.

Electric Motor Vehicle means a motor vehicle primarily powered by an electric motor that draws current from rechargeable storage batteries, fuel cells, photovoltaic arrays, or other sources of electric current and may include an electric-hybrid vehicle.

Emergency Motor Vehicle means any vehicle that is legally authorized by a government authority to exceed the speed limit to transport people and equipment to and from situations in which speed is required to save lives or property, such as a rescue vehicle, fire truck or ambulance.

Fleet means a group of 20 or more light duty motor vehicles, excluding certain categories of vehicles as provided by section 490.3, used primarily in a metropolitan statistical area or consolidated metropolitan statistical area, as established by the Bureau of the Census as of December 31, 1992, with a 1980 Census population of more than 250,000 (listed in appendix A to this subpart), that are centrally fueled or capable of being centrally fueled, and are owned, operated, leased, or otherwise controlled—

(1) By a person who owns, operates, leases, or otherwise controls 50 or more light duty motor vehicles within the United States and its possessions and territories;

(2) By any person who controls such person;

(3) By any person controlled by such person; and

(4) By any person under common control with such person.

Flexible Fuel Vehicle means any motor vehicle engineered and designed to be operated on any mixture of two or more different fuels.

Law Enforcement Motor Vehicle means any vehicle which is primarily operated by a civilian or military police officer or sheriff, or by personnel of the Federal Bureau of Investigation, the Drug Enforcement Administration, or other enforcement agencies of the Federal government, or by State highway patrols, municipal law enforcement, or other similar enforcement agencies, and which is used for the purpose of law enforcement activities including, but not limited to, chase, apprehension, and surveillance of people engaged in or potentially engaged in unlawful activities.

Lease means the use and control of a motor vehicle for transportation purposes pursuant to a rental contract or similar arrangement with a term of 120 days or more.

Light Duty Motor Vehicle means a light duty truck or light duty vehicle, as such terms are defined under section 216(7) of the Clean Air Act (42 U.S.C. § 7550(7)), having a gross vehicle weight rating of 8,500 pounds or less, before any after-market conversion to alternative fuel operation.

Model Year means the period from September 1 of the previous calendar year through August 31.

Motor Vehicle means a self-propelled vehicle, other than a non-road vehicle, designed for transporting persons or property on a street or highway.

Non-road Vehicle means a vehicle not licensed for on-road use, including such vehicles used principally for industrial, farming or commercial use, for rail transportation, at an airport, or for marine purposes.

Original Equipment Manufacturer means a manufacturer that provides the original design and materials for assembly and manufacture of its product.

Original Equipment Manufacturer Vehicle means a vehicle engineered, designed, produced and warranted by an Original Equipment Manufacturer.

Person means any individual, partnership, corporation, voluntary association, joint stock company, business trust, Governmental entity, or other legal entity in the United States except United States Government entities.

State means any of the 50 States, the District of Columbia, the Commonwealth of Puerto Rico, and any other territory or possession of the United States.

Used Primarily, as utilized in the definition of ''fleet,'' means that a majority of a vehicle's total annual miles are accumulated within a covered metropolitan or consolidated metropolitan statistical area.

[61 FR 10653, Mar. 14, 1996, as amended at 64 FR 26829, May 17, 1999]

§ 490.3 Excluded vehicles.

When counting light duty motor vehicles to determine under this part whether a person has a fleet or to calculate alternative fueled vehicle acquisition requirements, the following vehicles are excluded—

(a) Motor vehicles held for lease or rental to the general public, including vehicles that are owned or controlled primarily for the purpose of short-term rental or extended-term leasing, without a driver, pursuant to a contract;

(b) Motor vehicles held for sale by motor vehicle dealers, including demonstration motor vehicles;

(c) Motor vehicles used for motor vehicle manufacturer product evaluations or tests, including but not limited to, light duty motor vehicles owned or held by a university research department, independent testing laboratory, or other such evaluation facility, solely for the purpose of evaluating the performance of such vehicle for engineering, research and development or quality control reasons;

(d) Law enforcement vehicles;

(e) Emergency motor vehicles;

(f) Motor vehicles acquired and used for purposes that the Secretary of Defense has certified to DOE must be exempt for national security reasons;

(g) Nonroad vehicles; and

(h) Motor vehicles which, when not in use, are normally parked at the personal residences of the individuals that usually operate them, rather than at a central refueling, maintenance, or business location.

§ 490.4 General information inquiries.

DOE responses to inquiries with regard to the provisions of this part that are not filed in compliance with §§ 490.5 or 490.6 of this part constitute general information and the responses provided shall not be binding on DOE.

§ 490.5 Requests for an interpretive ruling.

(a) *Right to file*. Any person who is or may be subject to this part shall have the right to file a request for an interpretive ruling on a question with regard to how the regulations apply to particular facts and circumstances.

(b) *How to file*. A request for an interpretive ruling shall be filed—

(1) With the Assistant Secretary;

(2) In an envelope labeled ''Request for Interpretive Ruling under 10 CFR part 490;'' and

(3) By messenger or mail at the Office of Energy Efficiency and Renewable Energy, EE–33, U.S. Department of Energy, 1000 Independence Avenue, S.W., Washington, D.C. 20585 or at such other address as DOE may provide by notice in the FEDERAL REGISTER.

(c) *Content of request for interpretive ruling*. At a minimum, a request under this section shall—

(1) Be in writing;

(2) Be labeled ''Request for Interpretive Ruling Under 10 CFR Part 490;''

(3) Identify the name, address, telephone number, and any designated representative of the person requesting the interpretive ruling;

(4) State the facts and circumstances relevant to the request;

(5) Be accompanied by copies of relevant supporting documents, if any;

(6) Specifically identify the pertinent regulations and the related question on which an interpretive ruling is sought with regard to the relevant facts and circumstances; and

(7) Contain any arguments in support of the terms of an interpretation the requester is seeking.

(d) *Public comment*. DOE may give public notice of any request for an interpretive ruling and invite public comment.

(e) *Opportunity to respond to public comment.* DOE may provide an opportunity for any person who requested an interpretive ruling to respond to public comments.

(f) *Other sources of information.* DOE may—

(1) Conduct an investigation of any statement in a request;

(2) Consider any other source of information in evaluating a request for an interpretive ruling; and

(3) Rely on previously issued interpretive rulings dealing with the same or a related issue.

(g) *Informal conference.* DOE, on its own initiative, may convene an informal conference with the person requesting an interpretive ruling.

(h) *Effect of an interpretive ruling.* The authority of an interpretive ruling shall be limited to the person requesting such ruling and shall depend on the accuracy and completeness of the facts and circumstances on which the interpretive ruling is based. An interpretive ruling by the Assistant Secretary shall be final for DOE.

(i) *Reliance on an interpretive ruling.* No person who obtains an interpretive ruling under this section shall be subject to an enforcement action for civil penalties or criminal fines for actions reasonably taken in reliance thereon, but a person may not act in reliance on an interpretive ruling that is administratively rescinded or modified, judicially invalidated, or its prospective effect is overruled by statute or regulation.

(j) *Denials of requests for an interpretive ruling.* DOE shall deny a request for an interpretive ruling if DOE determines that—

(1) There is insufficient information upon which to base an interpretive ruling;

(2) The questions posed should be treated in a general notice of proposed rulemaking under 42 U.S.C. 7191 and 5 U.S.C. 553;

(3) There is an adequate procedure elsewhere in this part for addressing the question posed such as a petition for exemption; or

(4) For other good cause.

(k) *Public file.* DOE may file a copy of an interpretive ruling in a public file labeled ''Interpretive Rulings Under 10 CFR Part 490'' which shall be available during normal business hours for public inspection at the DOE Freedom of Information Reading Room at 1000 Independence Avenue, SW, Washington, DC 20585, or at such other addresses as DOE may announce in a FEDERAL REGISTER notice.

§ 490.6 Petitions for generally applicable rulemaking.

(a) *Right to file.* Pursuant to 42 U.S.C. 7191 and 5 U.S.C. 553(e), any person may file a petition for generally applicable rulemaking under titles III, IV, and V of the Act with the DOE General Counsel.

(b) *How to file.* A petition for generally applicable rulemaking under this section shall be filed by mail or messenger in an envelope addressed to the Office of General Counsel, GC–1, U.S. Department of Energy, 1000 Independence Avenue, SW., Washington, DC 20585.

(c) *Content of rulemaking petitions.* A petition under this section must—

(1) Be labeled ''Petition for Rulemaking Under 10 CFR Part 490'';

(2) Describe with particularity the terms of the rule being sought;

(3) Identify the provisions of law that direct, authorize, or affect the issuance of the rules being sought; and

(4) Explain why DOE should not choose to make policy by precedent through interpretive rulings, petitions for exemption, or other adjudications.

(d) *Determination upon rulemaking petitions.* After considering the petition and other information deemed to be appropriate, DOE may grant the petition and issue an appropriate rulemaking notice, or deny the petition because the rule being sought—

(1) Would be inconsistent with statutory law;

(2) Would establish a generally applicable policy in an area that should be left to case-by-case determinations;

(3) Would establish a policy inconsistent with the underlying statutory purposes; or

(4) For other good cause.

§ 490.7 Relationship to other law.

(a) Nothing in this part shall be construed to require or authorize sale of, or conversion to, light duty alternative

fueled motor vehicles in violation of applicable regulations of any Federal, State or local government agency.

(b) Nothing in this part shall be construed to require or authorize the use of a motor fuel in violation of applicable regulations of any Federal, State, or local government agency.

§ 490.8 Replacement fuel production goal.

The goal of the replacement fuel supply and demand program established by section 502(b)(2) of the Act (42 U.S.C. 13252(b)(2)) and revised by DOE pursuant to section 504(b) of the Act (42 U.S.C. 13254(b)) is to achieve a production capacity of replacement fuels sufficient to replace, on an energy equivalent basis, at least 30 percent of motor fuel consumption in the United States by the year 2030.

[72 FR 12060, Mar. 15, 2007]

APPENDIX A TO SUBPART A OF PART 490—METROPOLITAN STATISTICAL AREAS/CONSOLIDATED METROPOLITAN STATISTICAL AREAS WITH 1980 POPULATIONS OF 250,000 OR MORE

Albany-Schenectady-Troy MSA NY
Albuquerque MSA NM
Allentown-Bethlehem-Easton MSA PA
Appleton-Oshkosh-Neenah MSA WI
Atlanta MSA GA
Augusta-Aiken MSA GA-SC
Austin-San Marcos MSA TX
Bakersfield MSA CA
Baton Rouge MSA LA
Beaumont-Port Arthur MSA TX
Binghamton MSA NY
Birmingham MSA AL
Boise City MSA ID
Boston-Worcester-Lawrence CMSA MA-NH-ME-CT
Buffalo-Niagara Falls MSA NY
Canton-Massillon MSA OH
Charleston MSA SC
Charleston MSA WV
Charlotte-Gastonia-Rock Hill MSA NC-SC
Chattanooga MSA TN-GA
Chicago-Gary-Kenosha CMSA IL-IN-WI
Cincinnati-Hamilton CMSA OH-KY-IN
Cleveland-Akron CMSA OH
Colorado Springs MSA CO
Columbia MSA SC
Columbus MSA OH
Columbus MSA GA-AL
Corpus Christi MSA TX
Dallas-Fort Worth CMSA TX
Davenport-Moline-Rock Island MSA IA-IL
Dayton-Springfield MSA OH
Daytona Beach MSA FL
Denver-Boulder-Greeley CMSA CO
Des Moines MSA IA
Detroit-Ann Arbor-Flint CMSA MI
Duluth MSA MN-WI
El Paso MSA TX
Erie MSA PA
Eugene-Springfield MSA OR
Evansville-Henderson MSA IN-KY
Fort Wayne MSA IN
Fresno MSA CA
Grand Rapids-Muskegon-Holland MSA MI
Greensboro-Winston Salem-High Point MSA NC
Greenville-Spartanburg-Anderson MSA SC
Harrisburg-Lebanon-Carlisle MSA PA
Hartford MSA CT
Hickory-Morganton MSA NC
Honolulu MSA HI
Houston-Galveston-Brazoria CMSA TX
Huntington-Ashland MSA WV-KY-OH
Indianapolis MSA IN
Jackson MSA MS
Jacksonville MSA FL
Johnson City-Kingsport-Bristol MSA TN-VA
Johnstown MSA PA
Kalamazoo-Battle Creek MSA MI
Kansas City MSA MO-KS
Knoxville MSA TN
Lakeland-Winter Haven MSA FL
Lancaster MSA PA
Lansing-East Lansing MSA MI
Las Vegas MSA NV-AZ
Lexington MSA KY
Little Rock-N. Little Rock MSA AR
Los Angeles-Riverside-Orange County CMSA CA
Louisville MSA KY-IN
Macon MSA GA
Madison MSA WI
McAllen-Edinburg-Mission MSA TX
Melbourne-Titusville-Palm Bay MSA FL
Memphis MSA TN-AR-MS
Miami-Fort Lauderdale CMSA FL
Milwaukee-Racine CMSA WI
Minneapolis-St. Paul MSA MN-WI
Mobile MSA AL
Modesto MSA CA
Montgomery MSA AL
Nashville MSA TN
New London-Norwich MSA CT-RI
New Orleans MSA LA
New York-N. New Jersey-Long Island CMSA NY-NJ-CT-PA
Norfolk-Virginia Beach-Newport News MSA VA-NC
Oklahoma City MSA OK
Omaha MSA NE-IA
Orlando MSA FL
Pensacola MSA FL
Peoria-Pekin MSA IL
Philadelphia-Wilmington-Atlantic City CMSA PA-NJ DE-MD
Phoenix-Mesa MSA AZ
Pittsburgh MSA PA
Portland-Salem CMSA OR-WA
Providence-Fall River-Warwick MSA RI-MA
Raleigh-Durham-Chapel Hill MSA NC

Reading MSA PA
Richmond-Petersburg MSA VA
Rochester MSA NY
Rockford MSA IL
Sacramento-Yolo CMSA CA
Saginaw-Bay City-Midland MSA MI
St. Louis MSA MO-IL
Salinas MSA CA
Salt Lake City-Ogden MSA UT
San Antonio MSA TX
San Diego MSA CA
San Francisco-Oakland-San Jose CMSA CA
San Juan MSA PR
Santa Barbara-Santa Maria-Lompoc MSA CA
Scranton-Wilkes Barre-Hazleton MSA PA
Seattle-Tacoma-Bremerton CMSA WA
Shreveport-Bossier City MSA LA
Spokane MSA WA
Springfield MSA MA
Stockton-Lodi MSA CA
Syracuse MSA NY
Tampa-St. Petersburg-Clearwater MSA FL
Toledo MSA OH
Tucson MSA AZ
Tulsa MSA OK
Utica-Rome MSA NY
Washington-Baltimore CMSA DC-MD-VA-WV
West Palm Beach-Boca Raton MSA FL
Wichita MSA KS
York MSA PA
Youngstown-Warren MSA OH

Subpart B [Reserved]

Subpart C—Mandatory State Fleet Program

§ 490.200 Purpose and scope.

This subpart sets forth rules implementing the provisions of Section 507(o) of the Act which requires, subject to some exemptions, that certain percentages of new light duty motor vehicles acquired for State fleets be alternative fueled vehicles.

§ 490.201 Alternative fueled vehicle acquisition mandate schedule.

(a) Except as otherwise provided in this part, of the new light duty motor vehicles acquired annually for State government fleets, including agencies thereof but excluding municipal fleets, the following percentages shall be alternative fueled vehicles for the following model years;

(1) 10 percent for model year 1997;
(2) 15 percent for model year 1998;
(3) 25 percent for model year 1999;
(4) 50 percent for model year 2000; and
(5) 75 percent for model year 2001 and thereafter.

(b) Each State shall calculate its alternative fueled vehicle acquisition requirements for the State government fleets, including agencies thereof, by applying the alternative fueled vehicle acquisition percentages for each model year to the total number of new light duty motor vehicles to be acquired during that model year for those fleets.

(c) If the calculation performed under paragraph (b) of this section produces a number that requires the acquisition of a partial vehicle, an adjustment to the acquisition number will be made by rounding the number of vehicles down the next whole number if the fraction is less than one half and by rounding the number of vehicles up to the next whole number if the fraction is equal to or greater than one half.

(d) A State fleet that first becomes subject to this part after model year 1997 shall acquire alternative fueled vehicles in the next model year at the percentage applicable to that model year according to the schedule in paragraph (a) of this section, unless the State is granted an exemption or reduction of the acquisition percentage pursuant to the procedures and criteria in section 490.204.

§ 490.202 Acquisitions satisfying the mandate.

The following actions within a model year qualify as acquisitions for the purpose of compliance with the requirements of section 490.201 of this part:

(a) The purchase or lease of an Original Equipment Manufacturer light duty vehicle (regardless of the model year of manufacture), capable of operating on alternative fuels that was not previously under control of the State or State agency;

(b) The purchase or lease of an aftermarket converted light duty vehicle (regardless of model year of manufacture), that was not previously under control of the State or State agency;

(c) The conversion of a newly purchased or leased light duty vehicle to operate on alternative fuels within four months after the vehicle is acquired for a State fleet; and

(d) The application of alternative fueled vehicle credits allocated under subpart F of this part.

§ 490.203 Light Duty Alternative Fueled Vehicle Plan.

(a) *General Provisions.* (1) In lieu of meeting its requirements under section 490.201 exclusively with acquisitions for State fleets, a State may follow a Light Duty Alternative Fueled Vehicle Plan that has been approved by DOE under this section.

(2) Any Light Duty Alternative Fueled Vehicle Plan must provide for voluntary acquisitions or conversions, or combinations thereof, by State, local, and private fleets that equal or exceed the State's alternative fuel vehicle acquisition requirement under section 490.201.

(3) Any acquisitions of light duty alternative fueled vehicles by participants in the State plan may be included for purposes of compliance, irrespective of whether the vehicles are in excluded categories set forth in section 490.3 of this part.

(4) Except as provided in paragraph (h) of this section or except for a fleet exempt under section 490.204, a State that does not have an approved plan in effect under this section is subject to the State fleet acquisition percentage requirements of section 490.201.

(5) If a significant commitment under an approved plan is not met by a participant of a plan, the State shall meet its percentage requirements under section 490.201 or submit to DOE an amendment to the plan for DOE approval.

(b) *Required elements of a plan.* Each plan must include the following elements:

(1) Certification by the Governor, or the Governor's designee, that the plan meets the requirements of this subpart;

(2) Identification of State, local and private fleets that will participate in the plan;

(3) Number of new alternative fueled vehicles to be acquired by each plan participant;

(4) A written statement from each plan participant to assure commitment;

(5) A statement of contingency measures by the State to offset any failure to fulfill significant commitments by plan participants, in order to meet the requirements of section 490.201;

(6) A provision by the State to monitor and verify implementation of the plan;

(7) A provision certifying that all acquisitions and conversions under the plan are voluntary and will meet the requirements of § 247 of the Clean Air Act, as amended (42 U.S.C. 7587) and all applicable safety requirements.

(c) *When to submit plan.* (1) For model year 1997, a State shall submit its plan on or before March 14, 1997.

(2) Beginning with model year 1998, a State shall submit its plan to DOE no later than June 1 prior to the first model year covered by such plan.

(d) *Review and approval.* DOE shall review and approve a plan which meets the requirements of this subpart within 60 days of the date of receipt of the plan by DOE at the address in paragraph (g)(1) of this section.

(e) *Disapproval of plans.* If DOE disapproves or requests a State to submit additional information, the State may revise and resubmit the plan to DOE within a reasonable time.

(f) *How a State may modify an approved plan.* If a State determines that it cannot successfully implement its plan, it may submit to DOE for approval, at any time, the proposed modifications with adequate justifications.

(g) *Where to submit plans.* (1) A State shall submit to DOE an original and two copies of the plan and shall be addressed to the U.S. Department of Energy, Office of Energy Efficiency and Renewable Energy, EE-33, 1000 Independence Ave., SW., Washington, DC 20585, or to such other address as DOE may announce in a FEDERAL REGISTER notice.

(2) Any requests for modifications shall also be sent to the address in paragraph (g)(1) of this section.

(h) *MY 1997 Exemption.* (1) On or after September 1, 1996, a State shall be deemed automatically exempt from section 490.201 (a)(1) until DOE makes a final determination on a timely application to approve a plan for model year 1997 under this section if the State:

(i) Has submitted the application; or

(ii) Has sent a written notice to the Assistant Secretary, at the address

under paragraph (g)(1) of this section, that it will file such an application on or before March 14, 1997.

(2) During the period of an automatic exemption under this paragraph, a State may procure light duty motor vehicles in accordance with its normal procurement policies.

§ 490.204 Process for granting exemptions.

(a) To obtain an exemption, in whole or in part, from the vehicle acquisition mandate in section 490.201 of this part, a State shall submit to DOE a written request for exemption, along with supporting documentation which must demonstrate that—

(1) Alternative fuels that meet the normal requirements and practices of the principal business of the State fleet are not available from fueling sites that would permit central fueling of fleet vehicles in the area in which the vehicles are to be operated; or

(2) Alternative fueled vehicles that meet the normal requirements and practices of the principal business of the State fleet are not available for purchase or lease commercially on reasonable terms and conditions in the State; or

(3) The application of such requirements would pose an unreasonable financial hardship.

(b) Requests for exemption may be submitted at any time and must be accompanied with supporting documentation.

(c) Exemptions are granted for one model year only, and they may be renewed annually, if supporting documentation is provided.

(d) Exemptions may be granted in whole or in part. When granting an exemption in part, DOE may, depending upon the circumstances, completely relieve a State from complying with a portion of the vehicle acquisition requirements for a model year, or it may require a State to acquire all or some of the exempted vehicles in future model years.

(e) If a State is seeking an exemption under—

(1) Paragraph (a)(1) of this section, the types of documentation that are to accompany the request must include, but are not limited to, maps of vehicle operation zones and maps of locations providing alternative fuel; or

(2) Paragraph (a)(2) of this section, the types of documentation that are to accompany the request must include, but are not limited to, alternative fueled vehicle purchase or lease requests, a listing of vehicles that meet the normal practices and requirements of the State fleet, and any other documentation that exhibits good faith efforts to acquire alternative fueled vehicles; or

(3) Paragraph (a)(3) of this section, it must submit a statement identifying what portion of the alternative fueled vehicle acquisition requirement should be subject to the exemption and describing the specific nature of the financial hardship that precludes compliance.

(f) Requests for exemption shall be addressed to the U.S. Department of Energy, Office of Energy Efficiency and Renewable Energy, EE-33, 1000 Independence Ave., SW., Washington, DC 20585, or to such other address as DOE may announce in a FEDERAL REGISTER notice.

(g) The Assistant Secretary shall provide to the State, within 45 days of receipt of a request that complies with this section, a written determination as to whether the State's request has been granted or denied.

(h) If the Assistant Secretary denies an exemption, in whole or in part, and the State wishes to exhaust administrative remedies, the State must appeal within 30 days of the date of the determination, pursuant to 10 CFR part 1003, subpart C, to the Office of Hearings and Appeals, U.S. Department of Energy, 1000 Independence Ave., SW., Washington, DC 20585. The Assistant Secretary's determination shall be stayed during the pendency of an appeal under this paragraph.

§ 490.205 Reporting requirements.

(a) Any State subject to the requirements of this subpart must file an annual report for each State fleet on or before the December 31 after the close of the model year, beginning with model year 1997. The State annual report may consist of a single State report or separately prepared State agency reports.

(b) The report shall include the following information:

(1) Number of new light duty motor vehicles acquired for the fleet by a State during the model year;

(2) Number of new light duty alternative fueled vehicles that are required to be acquired during the model year;

(3) Number of new light duty alternative fueled vehicle acquisitions by the State during the model year;

(4) Number of alternative fueled vehicle credits applied against acquisition requirements;

(5) For each new light duty alternative fueled vehicle acquisition—

(i) Vehicle make and model;

(ii) Model year;

(iii) Vehicle identification number;

(iv) Dedicated or dual-fueled (including flexible fuel); and

(v) Type of alternative fuel the vehicle is capable of operating on; and

(6) Number of light duty alternative fueled vehicles acquired by municipal and private fleets during the model year under an approved Light Duty Alternative Fueled Vehicle Plan (if applicable).

(c) If credits are applied against vehicle acquisition requirements, then a credit activity report, as described in subpart F of this part, must be submitted with the report under this section to DOE.

(d) Records shall be maintained and retained for a period of three years.

(e) All reports, marked ''Annual Report,'' shall be sent to the Office of Energy Efficiency and Renewable Energy, U.S. Department of Energy, EE-33, 1000 Independence Ave., SW., Washington, DC, 20585, or such other address as DOE may provide by notice in the FEDERAL REGISTER.

§ 490.206 Violations.

Violations of this subpart are subject to investigation and enforcement under subpart G of this part.

Subpart D—Alternative Fuel Provider Vehicle Acquisition Mandate

§ 490.300 Purpose and Scope.

This subpart implements section 501 of the Act, which requires, subject to some exemptions, that certain annual percentages of new light duty motor vehicles acquired by alternative fuel providers must be alternative fueled vehicles.

§ 490.301 Definitions.

In addition to the definitions found in section 490.2, the following definitions apply to this subpart—

Affiliate means a person that, directly or indirectly, controls, is controlled by, or is under common ownership or control of a person subject to vehicle acquisition requirements in this part.

Alternative Fuels Business means activities undertaken to derive revenue from—

(1) Producing, storing, refining, processing, transporting, distributing, importing, or selling at wholesale or retail any alternative fuel other than electricity; or

(2) Generating, transmitting, importing, or selling at wholesale or retail electricity.

Business Unit means a semi-autonomous major grouping of activities for administrative purposes and organizational structure within a business entity and that is controlled by or under control of a person subject to vehicle acquisition requirements in this part.

Division means a major administrative unit of an enterprise comprising at least several enterprise units or constituting a complete integrated unit for a specific purpose and that is controlled by or under control of a person subject to vehicle acquisition requirements in this part.

Normal Requirements and Practices means the operating business practices and required conditions under which the principal business of a person subject to vehicle acquisition requirements in this part operates.

Principal Business means the sales-related activity that produces the greatest gross revenue.

Substantial Portion means that at least 30 percent of the annual gross revenue of a covered person is derived from the sale of alternative fuels.

Substantially Engaged means that a covered person, or affiliate, division, or other business unit thereof, regularly derives more than a negligible amount of sales-related gross revenue from an alternative fuels business.

§ 490.302 Vehicle acquisition mandate schedule.

(a) Except as provided in section 490.304 of this part, of the light duty motor vehicles newly acquired by a covered person described in section 490.303 of this part, the following percentages shall be alternative fueled vehicles for the following model years:

(1) 30 percent for model year 1997.

(2) 50 percent for model year 1998.

(3) 70 percent for model year 1999.

(4) 90 percent for model year 2000 and thereafter.

(b) Except as provided in section 490.304 of this part, this acquisition schedule applies to all light duty motor vehicles that a covered person newly acquires for use within the United States.

(c) If, when the mandated acquisition percentage of alternative fuel vehicles is applied to the number of new light duty motor vehicles to be acquired by a covered person subject to this subpart, a number results that requires the acquisition of a partial vehicle, an adjustment will be made to the required acquisition number by rounding down to the next whole number if the fraction is less than one half and by rounding up the number of vehicles to the next whole number if the fraction is equal to or greater than one half.

(d) Only acquisitions satisfying the mandate, as defined by section 490.305, count toward compliance with the acquisition schedule in paragraph (a) of this section.

(e) A covered person that is first subject to the acquisition requirements of this part after model year 1997 shall acquire alternative fueled vehicles in the next model year at the percentage applicable to that model year, according to the schedule in paragraph (a) of this section, unless the covered person is granted an exemption or reduction of the acquisition percentage pursuant to the procedures and criteria in section 490.308.

§ 490.303 Who must comply.

(a) Except as provided by paragraph (b) of this section, a covered person must comply with the requirements of this subpart if that person is—

(1) A covered person whose principal business is producing, storing, refining, processing, transporting, distributing, importing or selling at wholesale or retail any alternative fuel other than electricity; or

(2) A covered person whose principal business is generating, transmitting, importing, or selling, at wholesale or retail, electricity; or

(3) A covered person—

(i) Who produces, imports, or produces and imports in combination, an average of 50,000 barrels per day or more of petroleum; and

(ii) A substantial portion of whose business is producing alternative fuels.

(b) This subpart does not apply to a covered person or affiliate, division, or other business unit of such person whose principal business is—

(1) transforming alternative fuels into a product that is not an alternative fuel; or

(2) consuming alternative fuels as a feedstock or fuel in the manufacture of a product that is not an alternative fuel.

§ 490.304 Which new light duty motor vehicles are covered.

(a) *General rule.* Except as provided in paragraph (b) of this section, the vehicle acquisition mandate schedule in section 490.302 of this part applies to all light duty motor vehicles newly acquired for use within the United States by a covered person described in section 490.303 of this part.

(b) *Exception.* If a covered person has more than one affiliate, division, or other business unit, then section 490.302 of this part only applies to light duty motor vehicles newly acquired by an affiliate, division, or other such business unit which is substantially engaged in the alternative fuels business.

§ 490.305 Acquisitions satisfying the mandate.

The following actions within the model year qualify as acquisitions for the purpose of compliance with the requirements of section 490.302 of this part—

(a) The purchase or lease of an Original Equipment Manufacturer light duty vehicle (regardless of the model year of manufacture), capable of operating on alternative fuels that was not

previously under the control of the covered person;

(b) The purchase or lease of an aftermarket converted light duty vehicle (regardless of the model year of manufacture), that was not previously under the control of the covered person; and

(c) The conversion of a newly purchased or leased light duty vehicle to operate on alternative fuels within four months after the vehicle is acquired by a covered person; and

(d) The application of alternative fueled vehicle credits allocated under subpart F of this part.

§ 490.306 Vehicle operation requirements.

The alternative fueled vehicles acquired pursuant to section 490.302 of this part shall be operated solely on alternative fuels, except when these vehicles are operating in an area where the appropriate alternative fuel is unavailable.

§ 490.307 Option for Electric Utilities.

(a) A covered person or its affiliate, division, or business unit, whose principal business is generating, transmitting, importing, or selling, at wholesale or retail, electricity has the option of delaying the vehicle acquisition mandate schedule in section 490.302 until January 1, 1998, if the covered person intends to comply with this regulation by acquiring electric motor vehicles.

(b) If a covered person or its affiliate, division, or business unit, whose principal business is generating, transmitting, importing, or selling at wholesale or retail electricity has notified the Department as required by the Act, of its intent to acquire electric motor vehicles, the following percentages of new light duty motor vehicles acquired shall be alternative fueled vehicles for the following time periods:

(1) 30 percent from January 1, 1998 to August 31, 1998.

(2) 50 percent for model year 1999.

(3) 70 percent for model year 2000.

(4) 90 percent for model year 2001 and thereafter.

(c) Any covered person or its affiliate, division, or business unit, that chooses the option provided by this section may apply for an exemption from the vehicle acquisition mandate in accordance with section 490.308 of this regulation.

(d) Any covered person or its affiliate, division, or business unit, that chooses to rescind its election of the option provided in this section shall be required, unless otherwise exempt, to acquire alternative fueled vehicles in accordance with the vehicle acquisition schedule in section 490.302.

§ 490.308 Process for granting exemptions.

(a) To obtain an exemption from the vehicle acquisition mandate in this subpart, a covered person, or its affiliate, division, or business unit which is subject to section 490.302 of this part, shall submit a written request for exemption to the Office of Energy Efficiency and Renewable Energy, U.S. Department of Energy, EE-33, 1000 Independence Ave., SW., Washington, DC 20585, or such other address as DOE may publish in the FEDERAL REGISTER, along with the supporting documentation required by this section.

(b) A covered person requesting an exemption must demonstrate that—

(1) Alternative fuels that meet the normal requirements and practices of the principal business of the covered person are not available from fueling sites that would permit central fueling of that person's vehicles in the area in which the vehicles are to be operated; or

(2) Alternative fueled vehicles that meet the normal requirements and practices of the principal business of the covered person are not available for purchase or lease commercially on reasonable terms and conditions in any State included in a MSA/CMSA that the vehicles are operated in.

(c) *Documentation.* (1) Except as provided in paragraph (c) (2) of this section, if a covered person is seeking an exemption under paragraph (b)(1) of this section, the types of documentation that are to accompany the request include, but are not limited to, maps of vehicle operation zones and maps of locations providing alternative fuel.

(2) If a covered person seeking an exemption under paragraph (b)(1) of this section operates light duty vehicles outside of the areas listed in appendix

A of subpart A, and central fueling of those vehicles does not meet the normal requirements and practices of that person's business, then that covered person shall only be required to justify in a written request why central fueling is incompatible with its business.

(3) If a covered person is seeking an exemption under paragraph (b)(2) of this section, the types of documentation that are to accompany the request include, but are not limited to, alternative fueled vehicle purchase or lease requests, a listing of vehicles that meet the normal practices and requirements of the covered person and any other documentation that exhibits good faith efforts to acquire alternative fueled vehicles.

(d) Exemptions are granted for one model year only and may be renewed annually, if supporting documentation is provided.

(e) Exemptions may be granted in whole or in part. When granting an exemption in part, DOE may, depending upon the circumstances, completely relieve a covered person from complying with a portion of the vehicle acquisition requirements for a model year, or it may require a covered person to acquire all or some of the exempted vehicles in future model years.

(f) The Assistant Secretary shall provide to the covered person within 45 days after receipt of a request that complies with this section, a written determination as to whether the State's request has been granted or denied.

(g) If a covered person is denied an exemption, that covered person may file an appeal within 30 days of the date of determination, pursuant to 10 CFR part 1003, subpart C, with the Office of Hearings and Appeals, U.S. Department of Energy, 1000 Independence Ave, SW, Washington, DC 20585. The Assistant Secretary's determination shall be stayed during the pendency of an appeal under this paragraph.

§ 490.309 Annual reporting requirements.

(a) If a person is required to comply with the vehicle acquisition schedule in section 490.302 or section 490.307, that person shall file an annual report under this section, on a form obtainable from DOE, with the Office of Energy Efficiency and Renewable Energy, U.S. Department of Energy, EE-33, 1000 Independence Ave., SW., Washington, DC 20585, or such other address as DOE may publish in the FEDERAL REGISTER, on or before the December 31 after the close of the applicable model year.

(b) This report shall include the following information—

(1) Number of new light duty motor vehicles acquired by the covered person in the United States during the model year;

(2) Number of new light duty alternative fueled vehicles that are required to be acquired during the model year;

(3) Number of new light duty alternative fueled vehicle acquisitions in the United States during the model year;

(4) Number of alternative fueled vehicle credits applied against acquisition requirements;

(5) For each new light duty alternative fueled vehicle acquisition—

(i) Vehicle make and model;

(ii) Model year;

(iii) Vehicle Identification Number;

(iv) Dedicated or dual-fueled (including flexible fuel); and

(v) Type of alternative fuel the vehicle is capable of operating on.

(c) If credits are applied against alternative fueled vehicle acquisition requirements, then a credit activity report, as described in subpart F, must be submitted with the report under this section to DOE.

(d) Records shall be maintained and retained for a period of three years.

§ 490.310 Violations.

Violations of this subpart are subject to investigation and enforcement under subpart G of this part.

Subpart E [Reserved]

Subpart F—Alternative Fueled Vehicle Credit Program

§ 490.500 Purpose and Scope.

This subpart implements the statutory requirements of section 508 of the Act, which provides for the allocation of credits to fleets or covered persons who acquire alternative fueled vehicles

in excess of the number they are required or obtain alternative fueled vehicles before the model year when they are first required to do so under this part.

§ 490.501 Applicability.

This subpart applies to all fleets and covered persons who are required to acquire alternative fueled vehicles by this part.

§ 490.502 Creditable actions.

A fleet or covered person becomes entitled to alternative fueled vehicle credits by—

(a) Acquiring alternative fueled vehicles, including those in excluded categories under section 490.3 of this part and those exceeding 8,500 gross vehicle weight rating, in excess of the number of alternative fueled vehicles that fleet or covered person is required to acquire in a model year when acquisition requirements apply; or

(b) Acquiring alternative fueled vehicles, including those in excluded categories under section 490.3 of this part and those exceeding 8,500 gross vehicle weight rating, in model years before the model year when that fleet or covered person is first required to acquire alternative fueled vehicles.

(c) For purposes of this subpart, a fleet or covered person that acquired a motor vehicle on or after October 24, 1992, and converted it to an alternative fueled vehicle before April 15, 1996, shall be entitled to a credit for that vehicle notwithstanding the time limit on conversions established by sections 490.202(a)(3) and 490.305(a)(3) of this part.

§ 490.503 Credit allocation.

(a) Based on annual credit activity report information, as described in section 490.507 of this part, DOE shall allocate one credit for each alternative fueled vehicle a fleet or covered person acquires that exceeds the number of alternative fueled vehicles that fleet or person is required to acquire in a model year when acquisition requirements apply.

(b) If an alternative fueled vehicle is acquired by a fleet or covered person in a model year before the first model year that fleet or person is required to acquire alternative fueled vehicles by this part, as reported in the annual credit activity report, DOE shall allocate one credit per alternative fueled vehicle for each year the alternative fueled vehicle is acquired before the model year when acquisition requirements apply.

(c) DOE shall allocate credits to fleets and covered persons under paragraph (b) of this section only for alternative fueled vehicles acquired on or after October 24, 1992.

§ 490.504 Use of alternative fueled vehicle credits.

At the request of a fleet or covered person in an annual report under this part, DOE shall treat each credit as the acquisition of an alternative fueled vehicle that the fleet or covered person is required to acquire under this part. Each credit shall count as the acquisition of one alternative fueled vehicle in the model year for which the fleet or covered person requests the credit to be applied.

§ 490.505 Credit accounts.

(a) DOE shall establish a credit account for each fleet or covered person who obtains an alternative fueled vehicle credit.

(b) DOE shall send to each fleet and covered person an annual credit account balance statement after the receipt of its credit activity report under section 490.507.

§ 490.506 Alternative fueled vehicle credit transfers.

(a) Any fleet or covered person that is required to acquire alternative fueled vehicles may transfer an alternative fueled vehicle credit to—

(1) A fleet that is required to acquire alternative fueled vehicles; or

(2) A covered person subject to the requirements of this part, if the transferor provides certification to the covered person that the credit represents a vehicle that operates solely on alternative fuel.

(b) Proof of credit transfer may be on a form provided by DOE, or otherwise in writing, and must include dated signatures of the transferor and transferee. The proof should be received by DOE within 30 days of the transfer date

to the Office of Energy Efficiency and Renewable Energy, U.S. Department of Energy, EE-33, 1000 Independence Ave., SW., Washington, DC 20585 or such other address as DOE publishes in the FEDERAL REGISTER.

§ 490.507 Credit activity reporting requirements.

(a) A covered person or fleet applying for allocation of alternative fueled vehicle credits must submit a credit activity report by the December 31 after the close of a model year to the Office of Energy Efficiency and Renewable Energy, U.S. Department of Energy, EE-33, 1000 Independence Ave, SW., Washington, DC 20585 or other such address as DOE may publish in the FEDERAL REGISTER.

(b) This report must include the following information:

(1) Number of alternative fueled vehicle credits requested for:

(i) alternative fueled vehicles acquired in excess of required acquisition number; and

(ii) alternative fueled vehicles acquired in model years before the first model year the fleet or covered person is required to acquire vehicles by this part.

(2) Purchase of alternative fueled vehicle credits:

(i) Credit source; and

(ii) Date of purchase;

(3) Sale of alternative fueled vehicle credits:

(i) Credit purchaser; and

(ii) Date of sale.

Subpart G—Investigations and Enforcement

§ 490.600 Purpose and scope.

This subpart sets forth the rules applicable to investigations under titles III, IV, V, and VI of the Act and to enforcement of sections 501, 503(b), 507, 508, or 514 of the Act, or any regulation issued under such sections.

[72 FR 12964, Mar. 20, 2007]

§ 490.601 Powers of the Secretary.

For the purpose of carrying out titles III, IV, V, and VI of the Act, DOE may hold such hearings, take such testimony, sit and act at such times and places, administer such oaths, and require by subpena the attendance and testimony of such witnesses and the production of such books, papers, correspondence, memoranda, contracts, agreements, or other records as the Secretary of Transportation is authorized to do under section 505(b)(1) of the Motor Vehicle Information and Cost Savings Act (15 U.S.C. 2005(b)(1)).

§ 490.602 Special orders.

(a) DOE may require by general or special orders that any person—

(1) File, in such form as DOE may prescribe, reports or answers in writing to specific questions relating to any function of DOE under this part; and

(2) Provide DOE access to (and for the purpose of examination, the right to copy) any documentary evidence of such person which is relevant to any function of DOE under this part.

(b) File under oath any reports and answers provided under this section or as otherwise prescribed by DOE, and file such reports and answers with DOE within such reasonable time and at such place as DOE may prescribe.

§ 490.603 Prohibited acts.

It is unlawful for any person to violate any provision of sections 501, 503(b), 507, 514 of the Act, or any regulations issued under such sections.

[72 FR 12964, Mar. 20, 2007]

§ 490.604 Penalties and Fines.

(a) *Civil Penalties.* Whoever violates § 490.603 of this part shall be subject to a civil penalty of not more than $8,000 for each violation.

(b) *Willful violations.* Whoever willfully violates section 490.603 of this part shall pay a criminal fine of not more than $10,000 for each violation.

(c) *Repeated violations.* Any person who knowingly and willfully violates section 490.603 of this part, after having been subjected to a civil penalty for a prior violation of section 490.603 shall pay a criminal fine of not more than $50,000 for each violation.

[61 FR 10653, Mar. 14, 1996, as amended at 62 FR 46183, Sept. 2, 1997; 74 FR 66032, Dec. 14, 2009]

§490.605 Statement of enforcement policy.

DOE may agree not to commence an enforcement proceeding, or may agree to settle an enforcement proceeding, if the person agrees to come into compliance in a manner satisfactory to DOE. DOE normally will not commence an enforcement action against a person subject to the acquisition requirements of this part without giving that person notice of its intent to enforce 90 days before the beginning of an enforcement proceeding.

§490.606 Proposed assessments and orders.

DOE may issue a proposed assessment of, and order to pay, a civil penalty in a written statement setting forth supporting findings of violation of the Act or a relevant regulation of this part. The proposed assessment and order shall be served on the person named therein by certified mail, return-receipt requested, and shall become final for DOE if not timely appealed pursuant to section 490.607 of this part.

§490.607 Appeals.

(a) In order to exhaust administrative remedies, on or before 30 days from the date of issuance of a proposed assessment and order to pay, a person must appeal a proposed assessment and order to the Office of Hearings and Appeals, U.S. Department of Energy, 1000 Independence Avenue, SW., Washington, DC 20585.

(b) Proceedings in the Office of Hearings and Appeals shall be subject to subpart F of 10 CFR part 1003 except that—

(1) Appellant shall have the ultimate burden of persuasion;

(2) Appellant shall have right to a trial-type hearing on contested issues of fact only if the hearing officer concludes that cross examination will materially assist in determining facts in addition to evidence available in documentary form; and

(3) The Office of Hearings and Appeals may issue such orders as it may deem appropriate on all other procedural matters.

(c) The determination of the Office of Hearings and Appeals shall be final for DOE.

Subpart H—Biodiesel Fuel Use Credit

SOURCE: 64 FR 27174, May 19, 1999, unless otherwise noted.

§490.701 Purpose and scope.

(a) This subpart implements provisions of the Energy Conservation Reauthorization Act of 1998 (Pub. L. 105–388) that require, subject to some limitations, the allocation of credit to a fleet or covered person under Titles III and V of the Energy Policy Act of 1992 for the purchase of a qualifying volume of the biodiesel component of a fuel containing at least 20 percent biodiesel by volume.

(b) Fleets and covered persons may use these credits to meet, in part, their mandated alternative fueled vehicle acquisition requirements.

§490.702 Definitions.

In addition to the definitions found in §490.2, the following definitions apply to this subpart—

Biodiesel means a diesel fuel substitute produced from nonpetroleum renewable resources that meets the registration requirements for fuels and fuel additives established by the Environmental Protection Agency under section 211 of the Clean Air Act; and

Qualifying volume means—

(1) 450 gallons; or

(2) If DOE determines by rule that the average annual alternative fuel use in light duty vehicles by fleets and covered persons exceeds 450 gallons or gallon equivalents, the amount of such average annual alternative fuel use.

§490.703 Biodiesel fuel use credit allocation.

(a) DOE shall allocate to a fleet or covered person one credit for each qualifying volume of the biodiesel component of a fuel that contains at least 20 percent biodiesel by volume if:

(1) Each qualifying volume of the biodiesel component of a fuel was purchased after November 13, 1998;

(2) The biodiesel component of fuel is used in vehicles owned or operated by the fleet or covered person; and

(3) The biodiesel component of the fuel is used in vehicles weighing more than 8,500 pounds gross vehicle weight rating.

(b) No credit shall be allocated under this subpart for a purchase of the biodiesel component of a fuel if the fuel is:

(1) For use in alternative fueled vehicles which have been used to satisfy the alternative fueled vehicle acquisition requirements under Titles III and V of the Energy Policy Act of 1992; or

(2) Required by Federal or State law.

[64 FR 27174, May 19, 1999, as amended at 66 FR 2210, Jan. 11, 2001]

§ 490.704 Procedures and documentation.

(a) To receive a credit under this subpart, the fleet or covered person shall submit its request, on a form obtained from DOE, to the Office of Energy Efficiency and Renewable Energy, U. S. Department of Energy, EE–34, 1000 Independence Ave. SW., Washington, DC 20585, or such other address as DOE may publish in the FEDERAL REGISTER, along with the documentation required by paragraph (b) of this section.

(b) Each request for a credit under this subpart must be submitted on or before the December 31 after the close of the applicable model year and must include written documentation stating the quantity of biodiesel purchased, for the given model year, for use in vehicles weighing in excess of 8,500 lbs. gross vehicle weight;

(c) A fleet or covered person submitting a request for a credit under this subpart must maintain and retain purchase records verifying information in the request for a period of three years from December 31 immediately after the close of the model year for which the request is submitted.

§ 490.705 Use of credits.

(a) At the request of a fleet or covered person allocated a credit under this subpart, DOE shall, for the model year in which the purchase of a qualifying volume is made, treat that purchase as the acquisition of one alternative fueled vehicle the fleet or covered person is required to acquire under titles III and V of the Energy Policy Act of 1992.

(b) Except as provided in paragraph (c) of this section, credits allocated under this subpart may not be used to satisfy more than 50 percent of the alternative fueled vehicle requirements of a fleet or covered person under titles III and V of the Energy Policy Act of 1992.

(c) A fleet or covered person that is a biodiesel alternative fuel provider described in section 490.303 of this part may use its credits allocated under this subpart to satisfy all of its alternative fueled vehicle requirements under section 490.302.

(d) A fleet or covered person may not trade or bank biodiesel fuel credits.

[64 FR 27174, May 19, 1999, as amended at 66 FR 2210, Jan. 11, 2001]

§ 490.706 Procedure for modifying the biodiesel component percentage.

(a) DOE may, by rule, lower the 20 percent biodiesel volume requirement of this subpart for reasons related to cold start, safety, or vehicle function considerations.

(b) Any person may use the procedures in section 490.6 of this part to petition DOE for a rulemaking to lower the biodiesel volume percentage. A petitioner should include any data or information that it wants DOE to consider in deciding whether or not to begin a rulemaking.

§ 490.707 Increasing the qualifying volume of the biodiesel component.

DOE may increase the qualifying volume of the biodiesel component of fuel for purposes of allocation of credits under this subpart only after it:

(a) Collects data establishing that the average annual alternative fuel use in light duty vehicles by fleets and covered persons exceeds 450 gallons or gallon equivalents; and

(b) Conducts a rulemaking to amend the provisions of this subpart to change the qualifying volume to the average annual alternative fuel use.

§ 490.708 Violations.

Violations of this subpart are subject to investigation and enforcement under subpart G of this part.

Subpart I—Alternative Compliance

SOURCE: 72 FR 12964, Mar. 20, 2007, unless otherwise noted.

§ 490.801 Purpose and scope.

This subpart implements section 514 of the Act (42 U.S.C. 13263a) which permits States and alternative fuel providers to petition for alternative compliance waivers from the alternative fueled vehicle acquisition requirements in subparts C and D of this part, respectively.

§ 490.802 Eligibility for alternative compliance waiver.

Any State subject to subpart C of this part and any covered person subject to subpart D of this part may apply to DOE for a waiver from the applicable alternative fueled vehicle acquisition requirements.

§ 490.803 Waiver requirements.

DOE grants a State or covered person a waiver:

(a) If DOE determines that the State or covered person will achieve a reduction in petroleum consumption, through eligible reductions as specified in § 490.804 of this subpart, equal to the amount of alternative fuel used if the following vehicles were operated 100 percent of the time on alternative fuel during the model year for which a waiver is requested:

(1) Previously required alternative fueled vehicles in the fleet's inventory at the start of the model year for which a waiver is requested;

(2) Alternative fueled vehicles that the State or covered person would have been required to acquire in the model year for which a waiver is requested, and in previous model years in which a waiver was granted, absent any waivers;

(b) The State or covered person is in compliance with all applicable vehicle emission standards established by the Administrator of the Environmental Protection Agency under the Clean Air Act (42 U.S.C. 7401 *et seq.*); and

(c) The State or covered person is in compliance with all applicable requirements of this subpart.

§ 490.804 Eligible reductions in petroleum consumption.

(a) *Motor vehicles.* Demonstrated reductions in petroleum consumption during the model year for which a waiver is requested that are attributable to motor vehicles owned, operated, leased or otherwise under the control of a State or covered person are applicable towards the petroleum fuel reduction required in § 490.803(a) of this subpart.

(b) *Qualified nonroad vehicles.* Demonstrated reductions in petroleum consumption during the model year for which a waiver is requested that are attributable to nonroad vehicles owned, operated, leased or otherwise under the control of a State or covered person acquired during waiver years are applicable towards the petroleum fuel reduction required in § 490.803(a) of this subpart:

(1) If acquisition of the nonroad vehicles leads directly to the establishment or upgrading of refueling or recharging infrastructure during a waiver year that would also allow for increased petroleum replacement by serving the fleet's on-road light-duty vehicles; and

(2) To the extent that additional reductions attributable to motor vehicles are not reasonably available.

(c) *Rollover of excess petroleum reductions.* (1) Petroleum reductions achieved by a fleet in excess of the amount required for alternative compliance in a previous model year are applicable towards the petroleum fuel reduction requirements for that fleet under § 490.803(a) of this subpart upon approval by DOE.

(2) Requests for approval to apply rollover reductions to future model years for which a waiver is requested must be made to DOE in writing as part of the reporting requirement specified in § 490.807 of this subpart.

(3) DOE will apply approved rollover reductions to a model year for which a waiver was granted but the required reduction in petroleum use was not achieved only to the extent that additional reductions attributable to motor vehicles were not reasonably available.

(4) Following receipt of a request to roll over excess petroleum reduction,

DOE notifies the State or covered person of the amount of petroleum reduction that may be applied to a future model year's petroleum reduction requirement.

(5) Excess petroleum reductions are not tradable.

(d) *Ineligible reductions.* The petroleum reduction plan required by paragraph (c)(4) of this section must not include reductions in petroleum attributable to incentives for third parties to reduce their petroleum use, petroleum reductions that are not transportation-related, or petroleum reductions attributable to non-qualified nonroad vehicles.

§ 490.805 Application for waiver.

(a) A State or covered person must apply for a waiver applicable to an entire fleet for a full model year in accordance with the deadlines specified in paragraph (b) of this section. DOE will not grant a waiver for less than an entire fleet or less than a full model year.

(b)(1) A State or covered person must register a preliminary intent to apply for a waiver by March 31 prior to the model year for which a waiver is sought.

(2) If a complete waiver application is dependent on information regarding the availability of motor vehicle models to be released by motor vehicle manufacturers, the waiver application must be received by DOE no later than July 31 prior to the model year for which a waiver is sought.

(3) If a complete waiver application is not dependent on information regarding the availability of motor vehicle models to be released by motor vehicle manufacturers, the waiver application must be received by DOE no later than June 30 prior to the model year for which a waiver is sought.

(c) A waiver application must include verifiable data that is sufficient to enable DOE to determine whether the State or covered person is likely to achieve the amount of petroleum reduction required for alternative compliance and whether the fleet is in compliance with Clean Air Act vehicle emission standards. At a minimum, the State entity or covered person must provide DOE with the following information:

(1) The model year for which the waiver is requested;

(2) The total number of required alternative fueled vehicle acquisitions in the fleet including:

(i) The number of alternative fueled vehicle acquisitions that the State or covered person would, without a waiver, be required to acquire during the model year for which the waiver is requested;

(ii) The number of alternative fueled vehicle acquisitions that the State or covered person would, without a waiver, have been required to acquire during the model years for which waivers were previously granted;

(iii) The number of required alternative fueled vehicles existing in the fleet that were acquired during years in which no waiver was in force; and excluding

(iv) Any required alternative fuel vehicles acquired during a waiver or non-waiver year or light-duty vehicles acquired in lieu of alternative fuels vehicles during a waiver year that are to be retired before the beginning of the waiver year;

(3) The anticipated amount of gasoline and diesel and alternative fuel (calculated in gasoline gallon equivalents (gge)) to be used by the covered light-duty vehicles in the fleet for the waiver year including an estimate of per vehicle average fuel use in these vehicles;

(4) A petroleum reduction plan as described in paragraph (d) of this section; and

(5) Documents, or a certification by a responsible official of the State or covered person, demonstrating that the fleet is in compliance with all applicable vehicle emission standards established by the Administrator of the Environmental Protection Agency under the Clean Air Act.

(d) The petroleum reduction plan required by paragraph (c)(4) of this section must contain a documented explanation as to how the State or covered person will meet the reduction in petroleum consumption required by § 490.803(a) of this subpart.

(1) The planned actions must:

(i) Be verifiable;

(ii) Demonstrate a reduction in petroleum use by motor vehicles or qualified nonroad vehicles owned, operated, leased or otherwise controlled by the State or covered person;

(iii) Provide for a net reduction in petroleum consumption as specified in § 490.803(a) of this subpart.

(2) The documentation for the plan may include, but is not limited to, published data on fuel efficiency, Government data, letters from manufacturers, and data on actual usage.

(e) A State or covered person must send its report, and two copies, to DOE on official company or agency letterhead, and the report must be signed by a responsible company or agency official. Send to: Regulatory Manager, Alternative Fuel Transportation Program, FreedomCAR and Vehicle Technologies Program, EE–2G/Forrestal Building, U.S. Department of Energy, 1000 Independence Avenue, SW., Washington, DC 20585.

§ 490.806 Action on an application for waiver.

(a) DOE grants or denies a complete waiver application within 45 business days after receipt of a complete application.

(b) If DOE determines that an application is not complete in that sufficient information is not provided for DOE to make a determination, DOE notifies the State or covered person of the information that must be submitted to complete the application.

(c) If DOE denies a waiver, and the State or covered person wishes to exhaust administrative remedies, the State or covered person must appeal within 30 days of the date of the determination, pursuant to 10 CFR part 1003, subpart C, to the Office of Hearings and Appeals, U.S. Department of Energy, 1000 Independence Ave., SW., Washington, DC 20585. DOE's determination shall be stayed during the pendency of an appeal under this paragraph.

§ 490.807 Reporting requirement.

(a) By December 31 following a model year for which an alternative compliance waiver is granted, a State or covered person must submit a report to DOE that includes:

(1) A statement certifying:

(i) The total number of petroleum gallons and/or alternative fuel gge used by the fleet during the waiver year in its covered light-duty vehicles; and

(ii) The amount of petroleum motor fuel reduced by the fleet in the waiver year through alternative compliance.

(b) A State or covered person must send its report to DOE on official company or agency letterhead, and the report must be signed by a responsible company or agency official. Send to: Regulatory Manager, Alternative Fuel Transportation Program, FreedomCAR and Vehicle Technologies Program, EE–2G/Forrestal Building, U.S. Department of Energy, 1000 Independence Avenue, SW., Washington, DC 20585.

§ 490.808 Use of credits to offset petroleum reduction shortfall.

(a) If a State or covered person granted a waiver under this subpart wants to use alternative fueled vehicle credits purchased or earned pursuant to subpart F of this part to offset any shortfall in meeting the petroleum reduction required under § 490.803(a) of this subpart, it must make a written request to DOE.

(1) The State or covered person must provide details about the particular circumstances that led to the shortfall and provide documentation that shows a good faith effort to meet the requirements.

(2) DOE may request that a State or covered person supply additional information about the fleet and its operations if DOE deems such information necessary for a decision on the request.

(b) If DOE grants the request, it notifies the State or covered person of the credit amount required to offset the shortfall. DOE derives the credit amount using the fleet's fuel use per vehicle data.

(c) DOE gives the State entity or covered person until March 31 following the model year for which the waiver is granted, to acquire the number of credits required for compliance with this subpart.

§ 490.809 Violations.

If a State or covered person that receives a waiver under this subpart fails to comply with the petroleum motor

fuel reduction or reporting requirements of this subpart, DOE will revoke the waiver. DOE may impose on the State or covered person a penalty under subpart G of this part.

§ 490.810 Record retention.

A State or covered person that receives a waiver under this subpart must retain documentation pertaining to its waiver application and alternative compliance, including petroleum fuel reduction by its fleet, for a period of three years following the model year for which the waiver is granted.

PARTS 491–499 [RESERVED]