AUTHENTICATED
U.S. GOVERNMENT
INFORMATION
GPO

FIGURE 1 TO PART 1511—PACIFIER TEST FIXTURE

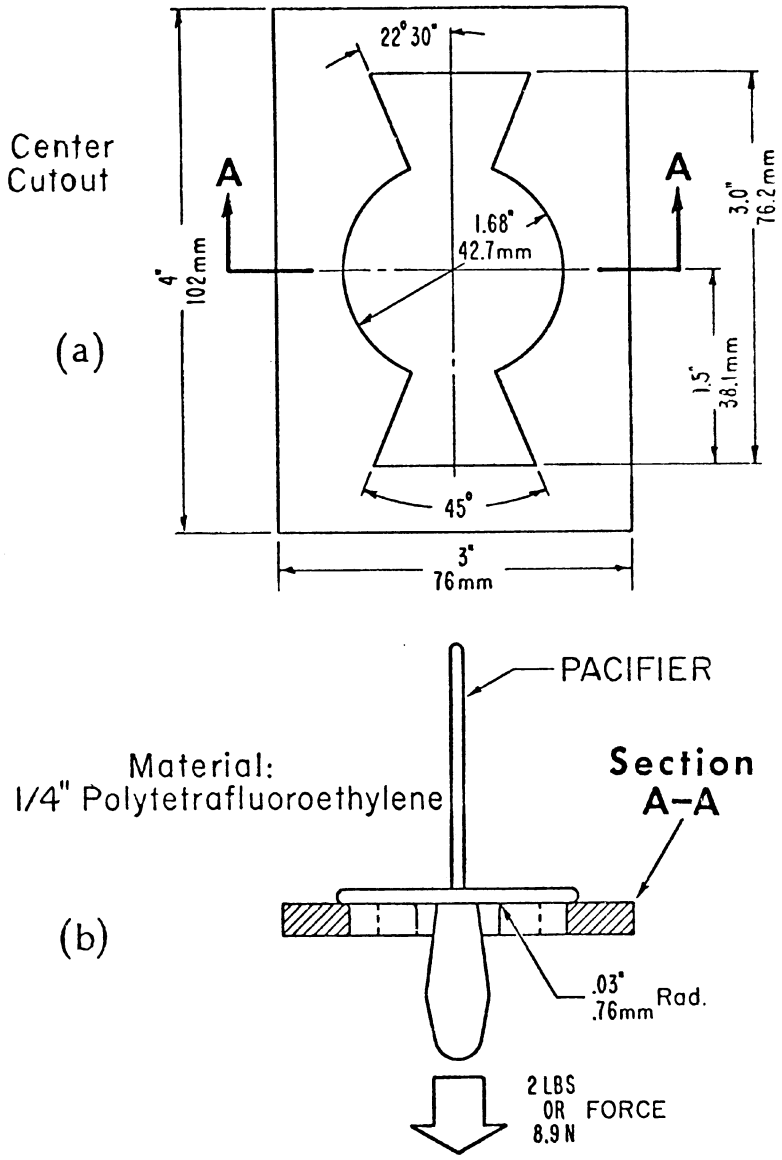

FIG 1 – PACIFIER TEST FIXTURE