AUTHENTICATED
U.S. GOVERNMENT
INFORMATION
GPO
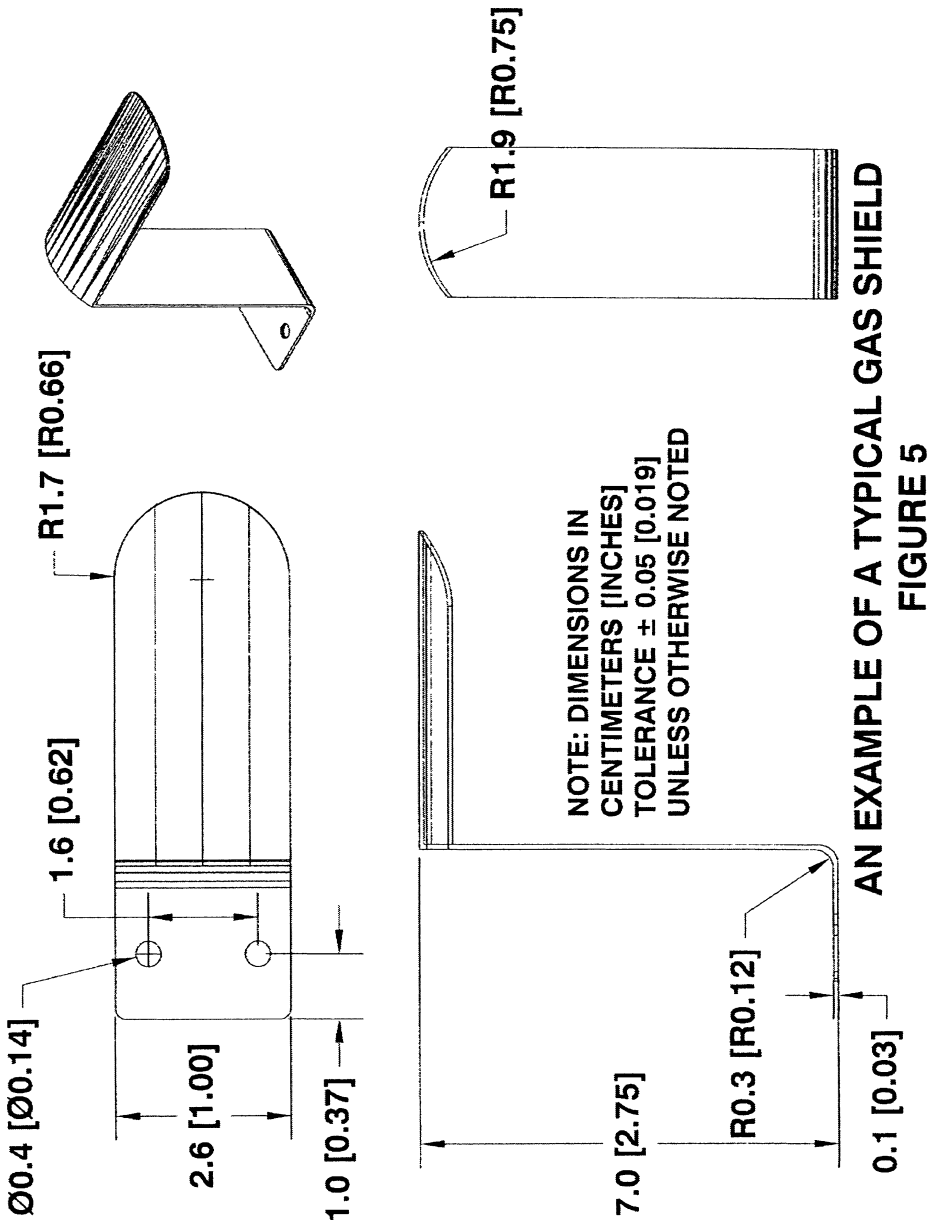
FIGURE 5 TO PART 1610—AN EXAMPLE OF A TYPICAL GAS SHIELD